BID SET DOCUMENT PLANS
FOR
DELAWARE VETERANS MEMORIAL CEMETERY

PATRIOTS WAY, MILLSBORO
DAGSBORO HUNDRED
SUSSEX COUNTY, DELAWARE
GOVERNOR JACK MARKELL
FIA No.: DE-13-21

GENERAL DATA:

1. SITE ADDRESS: DELAWARE VETERANS MEMORIAL CEMETERY
26669 PATRIOTS WAY
MILLSBORO, DE 19966
2. TAX PARCEL NO.: 133-7.00-8.00
3. SOURCE OF TITLE: DEED BOOK/PAGE D 4023 160
4. ZONING: STATE LANDS
5. AREA: 861.16± ACRES
6. DATE OF FIELD SURVEY: FEBRUARY, 2016 – AERIAL TOPOGRAPHIC SURVEY BY V&L, Inc.
7. DATUM: HORIZONTAL – DELAWARE STATE PLANE – NAD 1983
VERTICAL – NAVD 1988
8. SITE BENCHMARK: REBAR NORTH OF EXISTING MAINTENANCE BUILDINGS
N: 224024.68 LAT: N 38.6151°
E: 685912.03 LONG: W 75.3126°
EL.: 29.73
9. FLOODPLAIN: PORTIONS OF THIS PROPERTY LIE WITHIN THE 100 YEAR FLOOD ZONE PER F.E.M.A. FIRM MAP No. 10005C0452J, REVISED JANUARY 6, 2005. NO PORTION OF THIS PROJECT IS WITHIN THE 100 YEAR FLOOD ZONE.
10. WETLANDS: THERE ARE NO STATE AND FEDERAL WETLANDS WITHIN THE LIMIT OF DISTURBANCE OF THIS PROJECT PER DELAWARE VETERANS MEMORIAL CEMETERY BURIAL FIELD & COLUMBARIUM EXPANSION – PHASE 2 – FIA No.: DE-05-16 BY GEORGE, MILES & BUHR, LLC, DATED MARCH 2009. NO WETLAND IMPACTS ARE SHOWN BY THIS PLAN.
11. DISCHARGE LOCATION: RUNOFF FROM THE SITE GENERALLY FLOWS VIA OVERLAND AND THROUGH STORM PIPES TO ADJACENT WOODLAND DITCHES. ALL RUNOFF ULTIMATELY DRAINS TO THE WETLANDS SURROUNDING THE COWBRIDGE BRANCH TO THE EAST.

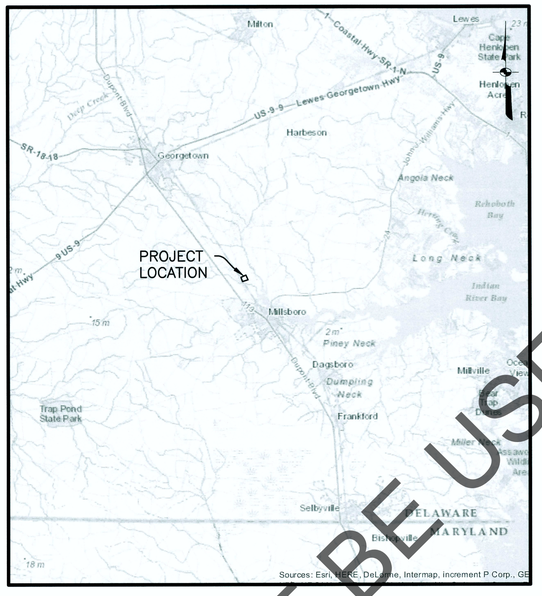

LOCATION MAP
SCALE: 1" = 3 MILES

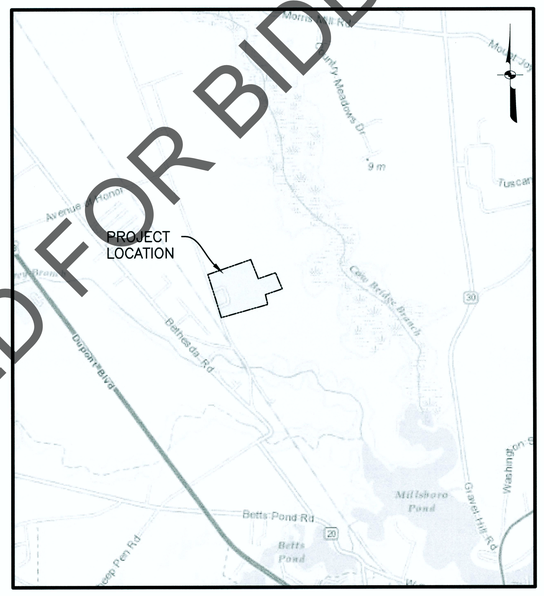

VICINITY MAP
SCALE: 1" = 2000'

CANNOT BE USED FOR BIDDING

SHEET INDEX

* GI001:	COVER SHEET/INDEX TO DRAWINGS
* GI002:	LEGEND & GENERAL NOTES
V-101:	EXISTING CONDITIONS PLAN/SURVEY
B-101:	GEOTECHNICAL SITE PLAN
B-102-103:	BORING LOGS
* C-100:	OVERALL SITE DEVELOPMENT PLAN
C-131:	GRAVESITE & SITE AMENITY LAYOUT PLAN (AREA 1)
C-402	CRYPT NUMBERING PLAN
* CG100:	PRE-DEVELOPED DRAINAGE AREA PLAN
* CG110:	PRE-CONSTRUCTION SITE STORMWATER MANAGEMENT PLAN
* CG121-122:	GRADING PLAN
* CG131:	DRAINAGE PLAN
* CG501-502	CONSTRUCTION SITE DETAILS AND NOTES
CU201	STORM DRAINAGE PROFILES
CI501:	SITE SIGNAGE AND AMENITY DETAILS
CI502:	GRAVESITE DETAILS
CI503:	GRAVESITE DETAILS
* L-101:	PLANTING PLAN (AREA 1)
* L-102:	PLANTING PLAN (AREA 2)
L-501:	PLANTING LIST & DETAILS
LI101:	IRRIGATION PLAN
LI102:	IRRIGATION PLAN
LI103:	IRRIGATION PLAN
LI501	IRRIGATION DETAILS
LI502	IRRIGATION DETAILS

*DNREC SEDIMENT AND STORMWATER PLAN SUBSET

CONSULTANT CONTACT INFORMATION

OWNER/DEVELOPER: STATE OF DELAWARE
DEPARTMENT OF STATE
DELAWARE COMMISSION OF VETERANS AFFAIRS
c/o DELAWARE VETERANS MEMORIAL CEMETERY
26669 PATRIOTS WAY
MILLSBORO, DE 19966

OWNER/DEVELOPER CONTACT: LARENCE KIRBY, EXECUTIVE DIRECTOR
DELAWARE COMMISSION OF VETERANS AFFAIRS
ROBBINS BUILDING
802 SILVER LAKE BLVD., SUITE 100
DOVER, DE 19904
TEL.: (302) 739-2293

LARRY E. SCHROCK
DEPARTMENT OF FACILITIES MANAGEMENT
STATE OF DELAWARE
540 SOUTH DuPONT HIGHWAY
DOVER, DE 19901
TEL.: (302) 739-5644

CIVIL ENGINEER: STEPHEN L. JOHNS, P.E., P.L.S.
VANDEMARK & LYNCH, INC
4305 MILLER ROAD
WILMINGTON, DELAWARE 19802
TEL: (302) 764-7635

CEMETERY DESIGN: DARRELL L. MEEHL, RLA, ASLA
THE LA GROUP
40 LONG ALLEY
SARATOGA SPRINGS, NEW YORK 12866
TEL: (518) 587-8100

IRRIGATION: ROBERT W. BECCARD, P.E.
AQUA ENGINEERING, INC.
375 EAST HORSETOOTH ROAD, BLDG. 2-202
FORT COLLINS, CO 80525
TEL: (970) 372-6104

STRUCTURAL: ALAN G. STEINLE, P.E.
STEINLE CONSTRUCTION ENGINEERS
4305 MILLER ROAD
WILMINGTON, DELAWARE 19802
TEL: (302) 764-7635

GEOTECHNICAL: MEGHAN LESTER
GEO-TECHNOLOGY ASSOCIATES, INC.
18 BOULDEN CIRCLE, SUITE 36
NEW CASTLE, DELAWARE 19729
TEL: (302) 326-2100

MECHANICAL/ELECTRICAL: LAWRENCE ELLIS
PARAGON ENGINEERING CORPORATION
708 PHILADELPHIA PIKE
WILMINGTON, DELAWARE 19809
TEL: (302) 762-6010

DELAWARE DEPT. OF NATURAL RESOURCES AND ENVIRONMENTAL CONTROL (DNREC)
APPLICATION NO.: _____
PLAN APPROVAL STAMP

PROFESSIONAL ENGINEER CERTIFICATION

I HEREBY CERTIFY THAT THIS PLAN HAS BEEN PREPARED UNDER MY SUPERVISION AND TO THE BEST OF MY KNOWLEDGE COMPLIES WITH THE APPLICABLE STATE AND LOCAL REGULATIONS AND ORDINANCES.

PROFESSIONAL ENGINEER — DATE 5/2/16
STEPHEN L. JOHNS, P.E., P.L.S.
PRINTED NAME

OWNERS CERTIFICATION

I, THE UNDERSIGNED, CERTIFY THAT ALL LAND CLEARING, CONSTRUCTION AND DEVELOPMENT SHALL BE DONE PURSUANT TO THE APPROVED PLAN AND THAT RESPONSIBLE PERSONNEL (I.E. BLUE CARD HOLDER) INVOLVED IN THE LAND DISTURBANCE WILL HAVE A CERTIFICATION OF TRAINING PRIOR TO INITIATION OF THE PROJECT, AT A DNREC SPONSORED OR APPROVED TRAINING COURSE FOR THE CONTROL OF EROSION AND SEDIMENT DURING CONSTRUCTION. IN ADDITION, I GRANT THE DNREC SEDIMENT AND STORMWATER PROGRAM AND/OR RELEVANT DELEGATED AGENCY THE RIGHT TO CONDUCT ON-SITE REVIEWS, AND I UNDERSTAND MY RESPONSIBILITIES UNDER THE NPDES CONSTRUCTION GENERAL PERMIT, AS REFERENCED ON THIS PLAN.

OWNER — DATE 5-2-16
LARENCE KIRBY
PRINTED NAME

GRAVESITE YIELD SUMMARY

	BURIAL TYPE	TOTAL
BASE BID (BURIAL SECTION F)	PRE-PLACED CRYPTS (STD. SIZE)	360
	OVER-SIZED PRE-PLACED CRYPTS	17
ADD-ALTERNATE 1 (BURIAL SECTION D)	PRE-PLACED CRYPTS (STD. SIZE)	399
ADD-ALTERNATE 2 (BURIAL SECTION J)	PRE-PLACED CRYPTS (STD. SIZE)	357
	TOTAL:	1,133

PURPOSE NOTE:

THE PURPOSE OF THIS PLAN IS TO DESIGN 1,133 PRE-PLACED DOUBLE-DEPTH CONCRETE LAWN CRYPTS WITHIN 3 NEW CRYPT FIELDS WITH CORRESPONDING IRRIGATION AND WATERING STATIONS. (377 PRE-PLACED CRYPTS WITH BASE BID, 399 PRE-PLACED CRYPTS WITH ADD-ALTERNATE 1 AND 357 PRE-PLACED CRYPTS WITH ADD-ALTERNATE 2.)

THE TOTAL LAND DISTURBANCE PROPOSED BY THIS PLAN IS 3.65± ACRES.

PROJECT NAME: DELAWARE VETERANS MEMORIAL CEMETERY – MILLSBORO.
PLAN SET: SEDIMENT AND STORMWATER MANAGEMENT PLANS
PROJECT LOCATION: 26669 PATRIOTS WAY, MILLSBORO, DE 19966 DAGSBORO HUNDRED, SUSSEX COUNTY, DELAWARE
WATERSHED: COWBRIDGE MILLSBORO POND WATERSHED
TAX PARCEL No. 133-7.00-8.00

REVIEW AGENCY CONTACT INFORMATION

SEDIMENT & STORMWATER: RANDELL GREER
DELAWARE DEPARTMENT OF NATURAL RESOURCES AND ENVIRONMENTAL CONTROL
89 KINGS HIGHWAY
DOVER, DELAWARE 19901
TEL: (302) 739-9921

Revisions: Date

CONSULTANTS:

STRUCTURAL: STEINLE CONSTRUCTION ENGINEERS A DIVISION OF VANDEMARK & LYNCH, INC. — 4305 MILLER ROAD, WILMINGTON, DE 19802, 302-764-7635, www.steinleengineers.com

MECHANICAL/ELECTRICAL: PARAGON ENGINEERING CORPORATION — MECHANICAL/ELECTRICAL, 708 Philadelphia Pike, Wilmington, DE 19809, ph: 302.762.6010, fax: 302.762.0653

IRRIGATION: Aqua Engineering, Inc. — Innovative Water Solutions, 4803 Innovation Drive, Fort Collins, Colorado 80525, Phone (970) 229-9668, FAX (970) 226-3855

GEOTECHNICAL: GEO-TECHNOLOGY ASSOCIATES, INC. — 18 Boulden Circle, Suite 36, New Castle, DE 19720, Tel: 302-326-2100

CEMETERY DESIGN: The LA GROUP — Landscape Architecture & Engineering P.C., People. Purpose. Place., 40 Long Alley, Saratoga Springs, NY 12866, p: 518-587-8100, f: 518-587-0180, www.thelagroup.com

ARCHITECT/ENGINEER: VANDEMARK & LYNCH, INC. — ENGINEERS – PLANNERS – SURVEYORS, 4305 MILLER ROAD, WILMINGTON, DE 19802/(302) 764-7635, WWW.VANDEMARKLYNCH.COM

U.S. DEPARTMENT OF VETERANS AFFAIRS

Drawing Title: COVER SHEET INDEX TO DRAWINGS
Approved: Project Director
Project Title: DELAWARE VETERANS MEMORIAL CEMETERY
Location: MILLSBORO, DELAWARE
Date: 5/02/2016 | Checked: SLJ | Drawn: JH
Project Number: DE-13-21
Building Number:
Drawing Number: GI001
Dwg 01 of 28

State of Delaware
Division of Facilities Management

VA FORM 08-6231, OCT 1978

BID SET DOCUMENTS SUBMISSION

Posted By: BILL JOHNSON
Date: 5/02/2016 10:12 AM
File Name: P:\Land Projects\2400\Veterans Cemeteries\24059-04 Veterans Cemetery - Millsboro\Plan Production\Construction Plan\24059-04-CD-PR-01.dwg

GENERAL CONSTRUCTION NOTES:

1. ALL CONSTRUCTION ACTIVITY SHALL BE COORDINATED WITH THE OWNER PRIOR TO ANY DISTURBANCE. NO WORK SHALL BE PERFORMED DURING MEMORIAL AND BURIAL SERVICES.
2. ACCESS TO THE SITE SHALL BE PROVIDED BY AND COORDINATED WITH THE OWNER. ALL DAMAGE TO PROPERTY SHALL BE REPAIRED TO MATCH EXISTING CONDITIONS.
3. THE BIDDER IS REQUIRED TO EXAMINE CAREFULLY THE SCOPE OF WORK, THE PROPOSAL, PLANS, SPECIFICATIONS AND OTHER CONTRACT DOCUMENTS FOR THE WORK CONTEMPLATED AND IT WILL BE ASSUMED THAT THE BIDDER IS FAMILIAR AND SATISFIED AS TO THE CHARACTER, QUALITY AND QUANTITIES OF WORK TO BE PERFORMED AND MATERIALS TO BE FURNISHED, AND AS TO THE REQUIREMENTS OF THESE SPECIFICATIONS, PLANS AND OTHER CONTRACT DOCUMENTS, AND THE BIDDER MUST BE PREPARED TO EXECUTE A FINISHED JOB IN EVERY PARTICULAR WITHOUT ANY EXTRA CHARGE WHATEVER, EXCEPT AS MAY BE SPECIFICALLY PROVIDED FOR ELSEWHERE.
4. ALL CONSTRUCTION METHODS AND MATERIALS SHALL CONFORM TO THE CURRENT DELAWARE DEPT. OF TRANSPORTATION'S "STANDARD SPECIFICATIONS FOR ROAD AND BRIDGE CONSTRUCTION", AND ALL SUBSEQUENT ADDENDA THERETO, AND SUSSEX COUNTY SPECIFICATIONS AND DETAILS, EXCEPT AS NOTED ON THESE PLANS. IN THE CASE OF A CONFLICT, THE MORE RESTRICTIVE STANDARD SHALL APPLY.
5. ALL CONSTRUCTION SHALL BE DONE IN COMPLIANCE WITH THE OCCUPATIONAL SAFETY AND HEALTH ACT OF 1970. ALL SUBSEQUENT ADDENDA, AND ALL RULES AND REGULATIONS APPURTENANT THERETO. THESE DRAWINGS DO NOT INCLUDE NECESSARY COMPONENTS FOR CONSTRUCTION SAFETY.
6. THE CONTRACTOR SHALL BE RESPONSIBLE FOR PROVIDING THE OWNER 48 HOURS NOTICE TO REQUEST SHUTTING OFF UTILITIES.
7. THE CONTRACTOR SHALL BE RESPONSIBLE FOR PROVIDING AND MAINTAINING ALL EROSION AND SEDIMENTATION CONTROL MEASURES AND STORMWATER MANAGEMENT PRACTICES NECESSARY TO COMPLY WITH THE STATE OF DELAWARE AND SUSSEX COUNTY REGULATIONS UNTIL ALL DISTURBED AREAS HAVE BEEN PERMANENTLY STABILIZED.
8. THE DELAWARE COMMISSION OF VETERANS AFFAIRS WILL BE RESPONSIBLE FOR ALL MAINTENANCE OF THE STORMWATER MANAGEMENT FACILITIES UPON PERMANENT STABILIZATION.
9. PLAN LOCATIONS AND DIMENSIONS SHALL BE STRICTLY ADHERED TO UNLESS OTHERWISE DIRECTED BY THE ENGINEER. DO NOT DETERMINE DIMENSIONS BY SCALING DRAWINGS.
10. THE CONTRACTOR IS RESPONSIBLE FOR FIELD VERIFYING ALL EXISTING CONDITIONS, LAYOUT DIMENSIONS, AND CLEARANCES THAT ARE SHOWN ON THE DRAWINGS. ANY DISCREPANCIES WITHIN THE DRAWINGS, EXISTING FIELD CONDITIONS, SPECIFICATIONS, CODES OR REGULATIONS ARE TO BE BROUGHT TO THE ATTENTION OF THE ENGINEER PRIOR TO THE START OF WORK. FIELD REVISIONS REQUIRE ENGINEERING REVIEW AND WRITTEN CONFIRMATION FROM THE OWNER.
11. ALL TREES, TIMBER, STUMPS, BRUSH, RUBBISH OR OTHER MATERIAL SHALL BE REMOVED FROM THE SITE. NO DEBRIS OR TREE STUMPS SHALL BE BURIED ON SITE, OPEN BURNING SHALL NOT BE PERMITTED.
12. ALL UNSUITABLE MATERIAL SHALL BE REMOVED FROM THE SITE UNLESS OTHERWISE DIRECTED BY THE OWNER'S REPRESENTATIVE.
13. ALL EXCAVATION, EXCEPT ROCK, SHALL BE UNCLASSIFIED AND SHALL BE PERFORMED IN ACCORDANCE WITH SECTIONS 205 AND 206 OF THE DELDOT SPECIFICATIONS.
14. ALL UNDERCUTTING OF ROCK OR UNSUITABLE MATERIALS SHALL BE BACKFILLED WITH SUITABLE MATERIAL AS DIRECTED BY THE ENGINEER.
15. ALL EXCESS EXCAVATION, OLD PAVEMENT, BASE COURSE, BROKEN CONCRETE, ETC. SHALL BECOME THE PROPERTY OF THE CONTRACTOR AND SHALL BE HAULED AWAY FROM THE SITE, UNLESS OTHERWISE APPROVED BY THE ENGINEER, AND PROPERLY DISPOSED OF.
16. THE CONTRACTOR SHALL BE RESPONSIBLE FOR ALL EXISTING PAVEMENT AND CURB PATCHING AND/OR REPLACEMENT, INCLUDING CONCRETE PATCHING. THE DESIGN & PREPARATION OF TRAFFIC CONTROL DURING CONSTRUCTION SHALL BE THE RESPONSIBILITY OF THE CONTRACTOR.
17. EXISTING UTILITIES ARE SHOWN IN ACCORDANCE WITH THE BEST AVAILABLE INFORMATION. IT SHALL BE THE CONTRACTOR'S RESPONSIBILITY TO VERIFY AND ALLOW FOR THEIR LOCATIONS. PRIOR TO CONSTRUCTION, THE CONTRACTOR SHALL CONTACT MISS UTILITY OF DELMARVA.
18. THE CONTRACTOR SHALL TAKE ALL NECESSARY PRECAUTIONS TO PROTECT ALL EXISTING UTILITIES AND MAINTAIN UNINTERRUPTED SERVICE. ANY UTILITY SHUT OFF SHALL BE COORDINATED WITH THE OWNER. ANY DAMAGE DONE TO UTILITIES DUE TO NEGLIGENCE SHALL BE IMMEDIATELY AND COMPLETELY REPAIRED AT CONTRACTOR'S EXPENSE.
19. THE CONTRACTOR SHALL PROTECT ALL ADJOINING AND NEARBY BUILDINGS, EQUIPMENT, UTILITIES, STRUCTURES, FENCES, TREES, SHRUBBERY, ETC. FROM DAMAGE DUE TO EXCAVATION, DEMOLITION AND CONSTRUCTION DURING THE ENTIRE CONSTRUCTION PERIOD. ANY DAMAGE CAUSED DIRECTLY OR INDIRECTLY BY THE CONTRACTOR SHALL BE IMMEDIATELY REPAIRED AT THE CONTRACTORS EXPENSE.
20. ANY SHEETING, SHORING, OR SIMILAR TRENCH BRACING THAT MAY BE NECESSARY FOR THE CONSTRUCTION OF THIS CONTRACT, SHALL BE THE RESPONSIBILITY OF THE CONTRACTOR AND INCIDENTAL TO THE ITEM BEING CONSTRUCTED.
21. THE CONTRACTOR SHALL SUBMIT CONCRETE MIX DESIGNS TO THE DESIGN ENGINEER FOR APPROVAL PRIOR TO CONSTRUCTION.
22. CONTRACTOR SHALL BE RESPONSIBLE FOR OBTAINING ALL REQUIRED PERMITS FROM THE DEPARTMENT OF NATURAL RESOURCES AND ENVIRONMENTAL CONTROL (DNREC) FOR DE-WATERING EXCAVATIONS.

EROSION AND SEDIMENT CONTROL DNREC CONSTRUCTION NOTES

a. THE DNREC SEDIMENT AND STORMWATER MANAGEMENT PROGRAM MUST BE NOTIFIED IN WRITING FIVE (5) DAYS PRIOR TO COMMENCING WITH CONSTRUCTION. FAILURE TO DO SO CONSTITUTES A VIOLATION OF THE APPROVED SEDIMENT AND STORMWATER MANAGEMENT PLAN.

b. REVIEW AND OR APPROVAL OF THE SEDIMENT AND STORMWATER MANAGEMENT PLAN SHALL NOT RELIEVE THE CONTRACTOR FROM HIS OR HER RESPONSIBILITIES FOR COMPLIANCE WITH THE REQUIREMENTS OF THE DELAWARE SEDIMENT AND STORMWATER REGULATIONS, NOR SHALL IT RELIEVE THE CONTRACTOR FROM ERRORS OR OMISSIONS IN THE APPROVED PLAN.

c. IF THE APPROVED PLAN NEEDS TO BE MODIFIED, ADDITIONAL SEDIMENT AND STORMWATER CONTROL MEASURES MAY BE REQUIRED AS DEEMED NECESSARY BY THE DNREC OR THE DELEGATED AGENCY.

d. FOLLOWING SOIL DISTURBANCE OR REDISTURBANCE, PERMANENT OR TEMPORARY STABILIZATION SHALL BE COMPLETED FOR ALL PERIMETER SEDIMENT CONTROLS, SOIL STOCKPILES, AND ALL OTHER DISTURBED OR GRADED AREAS ON THE PROJECT SITE WITHIN 14 CALENDAR DAYS UNLESS MORE RESTRICTIVE FEDERAL REQUIREMENTS APPLY.

e. ALL EROSION AND SEDIMENT CONTROL PRACTICES SHALL COMPLY WITH THE DELAWARE EROSION AND SEDIMENT CONTROL HANDBOOK, LATEST EDITION.

f. AT ANY TIME A DEWATERING OPERATION IS USED, IT SHALL BE PREVIOUSLY APPROVED BY THE AGENCY CONSTRUCTION SITE REVIEWER FOR A NON-EROSIVE POINT OF DISCHARGE, AND A DEWATERING PERMIT SHALL BE APPROVED BY THE DNREC WELL PERMITTING BRANCH.

g. APPROVED PLANS REMAIN VALID FOR 3 YEARS FROM THE DATE OF APPROVAL.

h. POST CONSTRUCTION VERIFICATION DOCUMENTS ARE TO BE SUBMITTED TO THE DNREC SEDIMENT AND STORMWATER PROGRAM WITHIN 60-DAYS OF STORMWATER MANAGEMENT FACILITY COMPLETION.

i. APPROVAL OF A SEDIMENT AND STORMWATER PLAN DOES NOT GRANT OR IMPLY A RIGHT TO DISCHARGE STORMWATER RUNOFF. THE OWNER/DEVELOPER IS RESPONSIBLE FOR ACQUIRING ANY AND ALL AGREEMENTS, EASEMENTS, ETC., NECESSARY TO COMPLY WITH STATE DRAINAGE AND OTHER APPLICABLE LAWS.

j. THE NOTICE OF INTENT FOR STORM WATER DISCHARGES ASSOCIATED WITH CONSTRUCTION ACTIVITY UNDER A NPDES GENERAL PERMIT FOR THIS PROJECT IS #5162. AT ANY TIME THE OWNERSHIP FOR THIS PROJECT CHANGES, A TRANSFER OF AUTHORIZATION OR A CO-PERMITTEE APPLICATION MUST BE SUBMITTED TO DNREC. THE PERMITTEE OF RECORD SHALL NOT BE RELIEVED OF THEIR RESPONSIBILITIES UNTIL A NOTICE OF TERMINATION HAS BEEN PROCESSED BY DNREC.

k. THE OWNER SHALL BE FAMILIAR WITH AND COMPLY WITH ALL ASPECTS OF THE NPDES CONSTRUCTION GENERAL PERMIT ASSOCIATED WITH THE PROJECT, INCLUDING, BUT NOT LIMITED TO, PERFORMING WEEKLY SITE INSPECTIONS DURING CONSTRUCTION AND AFTER RAIN EVENTS, AND MAINTAINING WRITTEN LOGS OF THESE INSPECTIONS.

l. BEFORE ANY EARTHWORK OR EXCAVATION TAKES PLACE, THE CONTRACTOR SHALL CALL MISS UTILITY AT 811 OR 1.800.282.8555 AT LEAST 48 HOURS PRIOR TO CONSTRUCTION, TO HAVE ALL EXISTING UTILITIES MARKED ONSITE.

m. THE CONTRACTOR SHALL AT ALL TIMES PROTECT AGAINST SEDIMENT OR DEBRIS LADEN RUNOFF OR WIND FROM LEAVING THE SITE. PERIMETER CONTROL SHALL BE CHECKED DAILY AND ADJUSTED AND/OR REPAIRED TO FULLY CONTAIN AND CONTROL SEDIMENT FROM LEAVING THE SITE. ACCUMULATED SEDIMENT SHALL BE REMOVED WHEN IT HAS REACHED HALF OF THE EFFECTIVE CAPACITY OF THE CONTROL. IN ADDITION, THE CONTRACTOR MAY NEED TO ADJUST OR ALTER MEASURES IN TIMES OF ADVERSE WEATHER CONDITIONS, OR AS DIRECTED BY THE AGENCY CONSTRUCTION SITE REVIEWER.

n. BEST AVAILABLE TECHNOLOGY (BAT) SHALL BE EMPLOYED TO MANAGE TURBID DISCHARGES IN ACCORDANCE WITH REQUIREMENTS OF 7. DEL C. CH 60, *REGULATIONS GOVERNING THE CONTROL OF WATER POLLUTION*, SECTION 9.1.02, KNOWN AS SPECIAL CONDITIONS FOR STORMWATER DISCHARGES ASSOCIATED WITH CONSTRUCTION ACTIVITIES, AND DEPARTMENT POLICIES, PROCEDURES, AND GUIDANCE.

o. DOCUMENTATION OF SOIL TESTING AND MATERIALS USED FOR TEMPORARY OR PERMANENT STABILIZATION INCLUDING BUT NOT LIMITED TO SOIL TEST RESULT, SEED TAGS, SOIL AMENDMENT TAGS, ETC. SHALL BE PROVIDED TO THE DEPARTMENT OR DELEGATED AGENCY TO VERIFY THAT THE PERMANENT OR TEMPORARY STABILIZATION HAS BEEN COMPLETED IN ACCORDANCE WITH THE APPROVED PLAN. THE DEPARTMENT OR DELEGATED AGENCY MAY REQUIRE ADDITIONAL SOIL TESTING AND REAPPLICATION OF PERMANENT OR TEMPORARY STABILIZATION IN ACCORDANCE WITH SPECIFICATIONS PROVIDED IN THE *DELAWARE EROSION AND SEDIMENT CONTROL HANDBOOK*, OR ALTERNATIVE MEASURES THAT PROVIDE FUNCTIONAL EQUIVALENCY.

EROSION AND SEDIMENT CONTROL GENERAL NOTES

1. ANY DEVIATION FROM THE SEQUENCE OF CONSTRUCTION INDICATED ON THIS DRAWING SHALL BE APPROVED BY DNREC.
2. MINOR FIELD ADJUSTMENTS MAY BE MADE TO INSURE THE CONTROL OF SEDIMENT, UPON APPROVAL OF THE SEDIMENT CONTROL REPRESENTATIVE.
3. ALL SEDIMENT CONTROL DEVICES, ONCE INSTALLED, SHALL BE APPROVED BY SEDIMENT CONTROL REPRESENTATIVES BEFORE PROCEEDING WITH ACTUAL CONSTRUCTION.
4. AT THE END OF EACH WORKING DAY ALL SEDIMENT CONTROL DEVICES SHALL BE INSPECTED AND LEFT IN FUNCTIONAL CONDITION.
5. NO SPOILS, STOCKPILED OR EXCAVATED MATERIAL MAY BE DISCHARGED INTO WETLANDS REGULATED BY THE STATE OF DELAWARE OR THE U.S. ARMY CORPS OF ENGINEERS.
6. CONTACT DNREC, SEDIMENT AND STORMWATER PROGRAM PRIOR TO COMMENCEMENT OF ANY WELL POINT OPERATIONS.
7. EROSION CONTROL MATTING IS REQUIRED IN OPEN CHANNELS AND ON SLOPES OF 3H:1V OR STEEPER. MATTING SHALL BE "NORTH AMERICAN GREEN SC150" OR AN EQUAL APPROVED BY DNREC, SEDIMENT AND STORMWATER PROGRAM.
8. LOCATE STOCKPILES ON AREAS WITH LITTLE OR NO SLOPE. STOCKPILES MUST BE SURROUNDED WITH SILT FENCE OR A STABILIZED EARTHEN BERM. STOCKPILE HEIGHTS SHALL NOT EXCEED 20'. STOCKPILE SLOPES SHALL BE 3:1 OR FLATTER.
9. STOCKPILING OF EXCAVATED MATERIAL OUTSIDE OF THE CONTRACT AREA SHALL REQUIRE AN ADDITIONAL EROSION AND SEDIMENT CONTROL PLAN FOR THAT LOCATION. PLAN MUST BE SUBMITTED AND APPROVED BY DNREC.
10. TO PREVENT OR REDUCE MOVEMENT OF DUST FROM DISTURBED SOIL SURFACES, THE CONTRACTOR SHALL SPRINKLE THE SITE WITH WATER UNTIL THE SURFACE IS MOIST AND REPEAT AS NECESSARY.
11. ALL GRADED AREAS TO BE SEEDED SHALL HAVE A 4" MINIMUM DEPTH OF TOP SOIL.
12. THE DELAWARE COMMISSION OF VETERANS AFFAIRS WILL BE RESPONSIBLE FOR ALL MAINTENANCE OF THE STORMWATER MANAGEMENT FACILITIES ONCE CONSTRUCTED.

SEQUENCE OF CONSTRUCTION

1. NOTIFY THE DNREC SEDIMENT AND STORMWATER MANAGEMENT PROGRAM IN WRITING AT LEAST FIVE (5) DAYS PRIOR TO THE START OF CONSTRUCTION. FAILURE TO DO SO CONSTITUTES A VIOLATION OF THE APPROVED SEDIMENT AND STORMWATER MANAGEMENT PLAN.
2. PRIOR TO ANY CLEARING, INSTALLATION OF SEDIMENT CONTROL MEASURES OR GRADING, A PRE-CONSTRUCTION MEETING MUST BE SCHEDULED AND CONDUCTED WITH THE AGENCY CONSTRUCTION SITE REVIEWER. THE LANDOWNER/DEVELOPER, CONTRACTOR, AND CERTIFIED CONSTRUCTION REVIEWER ARE REQUIRED TO BE IN ATTENDANCE AT THE PRE-CONSTRUCTION MEETING; THE DESIGNER IS RECOMMENDED TO ATTEND.
3. IF REQUIRED, THE DEVELOPER SHALL REQUEST, AT LEAST 48-HOURS IN ADVANCE, THAT DNREC EITHER MAKE A SITE INSPECTION OR ISSUE AN APPROVAL OF WORK COMPLETED AT THE FOLLOWING STAGES OF CONSTRUCTION:
   A. UPON COMPLETION OF PERIMETER CONTROL INSTALLATION.
   B. UPON ESTABLISHMENT OF PERMANENT VEGETATION.
   C. UPON COMPLETION OF PROJECT.
4. CLEAR AND GRUB ONLY THOSE AREAS NECESSARY FOR INSTALLATION OF PERIMETER EROSION AND SEDIMENT CONTROL MEASURES.
5. INSTALL PERIMETER EROSION AND SEDIMENT CONTROLS INCLUDING, STABILIZED CONSTRUCTION ENTRANCE, SILT FENCE, INLET PROTECTION, DIVERSION SWALES, ETC. PRIOR TO SITE DISTURBANCE.
6. ALL PERIMETER CONTROLS ARE TO BE REVIEWED BY THE AGENCY CONSTRUCTION SITE REVIEWER AND APPROVED PRIOR TO PROCEEDING WITH FURTHER SITE DISTURBANCE OR CONSTRUCTION.
7. THE CONTRACTOR SHALL AT ALL TIMES PROTECT AGAINST SEDIMENT OR DEBRIS LADEN RUNOFF AND WIND FROM LEAVING THE SITE. PERIMETER CONTROLS SHOULD BE CHECKED DAILY AND ADJUSTED AND/OR REPAIRED TO FULLY CONTAIN AND CONTROL SEDIMENTATION ON THE SITE. ACCUMULATED SEDIMENT SHALL BE REMOVED WHEN IT HAS REACHED HALF OF THE EFFECTIVE CAPACITY OF THE CONTROL. IN ADDITION, THE CONTRACTOR MAY NEED TO ADJUST OR REPAIR MEASURES IN TIMES OF ADVERSE WEATHER CONDITIONS, OR AS DIRECTED BY THE AGENCY CONSTRUCTION SITE REVIEWER.
8. CLEAR AND GRUB REMAINING AREAS (WITHIN LIMIT OF DISTURBANCE). STRIP TOPSOIL AND STOCKPILE AT DESIGNATED LOCATIONS.
9. EXCAVATE AND INSTALL IN-GROUND BURIAL VAULTS, AND BACKFILL. UPON BACKFILLING OF VAULTS, TOPSOIL AND SOD SHALL BE PLACED OVER COMPLETED VAULT AREAS.
10. INSTALLATION OF UNDERDRAINS AND UTILITIES MAY TAKE PLACE CONCURRENTLY WITH VAULT INSTALLATION.
11. PLACE TOPSOIL, FINE GRADE, SEED AND MULCH, OR SOD ALL DISTURBED AREAS.
12. INSTALL ALL REQUIRED LANDSCAPING PER THIS PLAN.
13. EROSION AND SEDIMENT CONTROL DEVICES SHOULD BE REMOVED ONLY AFTER WORK IN AN AREA HAS BEEN COMPLETED AND STABILIZED, WITH WRITTEN APPROVAL FROM THE AGENCY CONSTRUCTION SITE REVIEWER.
14. THE TERMINATION OF THE CONSTRUCTION PERMIT WILL REQUIRE FINAL STABILIZATION THROUGHOUT THE SITE AND ALL ELEMENTS OF THE SEDIMENT AND STORMWATER PLAN IMPLEMENTED.

LEGENDS

EXISTING		PROPOSED
	SIGN	N/A
	BRUSHLINE	N/A
	BUILDING	N/A
	CONTROL POINT	N/A
	CULVERT PIPE	
	CURB	N/A
	FIRE HYDRANT	N/A
	FLAGPOLE	N/A
	HEDGELINE	N/A
75	INDEX CONTOUR	(75)
74	INTERMEDIATE CONTOUR	(74)
	INLET	N/A
	LIGHT POLE	N/A
	MANHOLE	
	PAINT STRIPE	N/A
	PAVED ROAD	N/A
	POST	N/A
	POWER POLE	N/A
	SINGLE TREE	N/A
	SPOT ELEVATION	N/A
	TREELINE	N/A
	UNPAVED ROAD	N/A
	VALVE	N/A
	WALL	N/A
WV	WATER VALVE	N/A
	SPRINKLER & 2" WATERLINE	N/A
W	MAIN WATERLINE	N/A
	TEST PIT	N/A
	WETLAND	N/A
N/A	SILT FENCE	(SF)
N/A	LIMITS OF DISTURBANCE & CONSTRUCTION	(LOD)
N/A	INLET PROTECTION (IP-2)	(IP-2)
N/A	STABILIZED CONSTRUCTION ENTRANCE	SCE
N/A	TO BE REMOVED	
N/A	DIVERSION SWALE	DS
N/A	GEOTEXTILE DEWATERING BAG	GB
N/A	TEMPORARY SOIL STOCKPILE	TSS
N/A	CONCRETE WASHOUT	CW
N/A	DRAINAGE BOUNDARY	
N/A	SOILS BOUNDARY	ImB

ABBREVIATION

I.E.	= INVERT ELEVATION
T.E.	= TOP ELEVATION
ELEV.	= ELEVATION
L.F.	= LINEAR FEET
W.L.	= WATER LEVEL
TP	= TEST PIT
STCB	= STORM CATCHBASIN
N. OR F.	= NOW OR FORMERLY
PST	= PIPE SEDIMENT TRAP
DS	= DIVERSION SWALE
SCE	= SITE CONSTRUCTION ENTRANCE
SF	= SILT FANCE
LOD	= LIMIT OF DISTURBANCE AND CONSTRUCTION
TSS	= TEMPORARY SOIL STOCKPILE
IP	= INLET PROTECTION
CN	= CURVE NUMBER
Tc	= TIME OF CONCENTRATION
P.O.I.	= POINT OF INTEREST
MH	= MANHOLE
CB	= CATCH BASIN
HDPEP	= HIGH DENSITY POLYETHYLENE PIPE

CANNOT BE USED FOR BIDDING

UTILITIES NOTE:

EXISTING UTILITIES ARE SHOWN IN ACCORDANCE WITH THE BEST AVAILABLE INFORMATION. COMPLETENESS OR CORRECTNESS THEREOF IS NOT GUARANTEED. IT SHALL BE THE CONTRACTOR'S RESPONSIBILITY TO CONTACT THE UTILITY COMPANIES INVOLVED IN ORDER TO SECURE THE MOST ACCURATE INFORMATION AVAILABLE AS TO UTILITY LOCATION AND ELEVATION. NO CONSTRUCTION AROUND OR ADJACENT TO UTILITIES SHALL BEGIN WITHOUT NOTIFYING THEIR OWNERS AT LEAST 48 HOURS IN ADVANCE. THE CONTRACTOR SHALL TAKE THE NECESSARY PRECAUTIONS TO PROTECT THE EXISTING UTILITIES AND MAINTAIN UNINTERRUPTED SERVICE AND ANY DAMAGE DONE TO THEM SHALL BE IMMEDIATELY AND COMPLETELY REPAIRED AT CONTRACTOR'S EXPENSE. TO LOCATE EXISTING UTILITIES IN THE FIELD PRIOR TO CONSTRUCTION, THE CONTRACTOR SHALL CONTACT MISS UTILITY OF DELMARVA (TELEPHONE 800-282-8555). THE FOLLOWING UTILITIES ARE IDENTIFIED BY MISS UTILITY AS HAVING UNDERGROUND FACILITIES IN THE AREA OF THIS PROJECT (TICKET NO.: 160620314).

DELMARVA/USIC
VERIZON
MEDIACOM/USIC
DELAWARE DEPT. OF NATURAL RESOURCES

MISS UTILITY OF DELMARVA - DELAWARE
1-800-282-8555
CALL BEFORE YOU DIG!

PROJECT NAME: DELAWARE VETERANS MEMORIAL CEMETERY – MILLSBORO.

PLAN SET: SEDIMENT AND STORMWATER MANAGEMENT PLANS

PROJECT LOCATION: 26669 PATRIOTS WAY, MILLSBORO, DE 19966 DAGSBORO HUNDRED, SUSSEX COUNTY, DELAWARE

WATERSHED: COWBRIDGE MILLSBORO POND WATERSHED

TAX PARCEL No. 133-7.00-8.00

Revisions: | Date

CONSULTANTS:

STRUCTURAL: STEINLE CONSTRUCTION ENGINEERS, A DIVISION OF VANDEMARK & LYNCH, INC. SCE. 4305 MILLER ROAD, WILMINGTON, DE 19802, 302-764-7635, www.steinleengineers.com

MECHANICAL/ELECTRICAL: PARAGON ENGINEERING CORPORATION. MECHANICAL/ELECTRICAL. 708 Philadelphia Pike, Wilmington, DE 19809, ph: 302.762.6010, fax: 302.762.0653

IRRIGATION: Aqua Engineering, Inc. Innovative Water Solutions. 4803 Innovation Drive, Fort Collins, Colorado 80525, Phone (970) 229-9668, FAX (970) 226-3855

GEOTECHNICAL: GTA. GEO-TECHNOLOGY ASSOCIATES, INC. 18 Boulden Circle, Suite 36, New Castle, DE 19720, Tel: 302-326-2100

CEMETERY DESIGN: The LA GROUP, Landscape Architecture & Engineering P.C. People. Purpose. Place. 40 Long Alley, Saratoga Springs NY 12866, p: 518-587-8100, f: 518-587-0180, www.thelagroup.com

ARCHITECT/ENGINEER: VANDEMARK & LYNCH, INC. ENGINEERS – PLANNERS – SURVEYORS. 4305 MILLER ROAD, WILMINGTON, DE 19802/(302) 764-7635, WWW.VANDEMARKLYNCH.COM

STEPHEN L. JOHNS, REGISTERED PROFESSIONAL ENGINEER, NO. 5976, DELAWARE

U.S. DEPARTMENT OF VETERANS AFFAIRS

Drawing Title	LEGEND & GENERAL NOTES
Approved: Project Director	
Project Title	DELAWARE VETERANS MEMORIAL CEMETERY
Location	MILLSBORO, DELAWARE
Date	5/02/2016
Checked	SLJ
Drawn	JH
Project Number	DE-13-21
Building Number	
Drawing Number	GI002
Dwg	02 of 28

State of Delaware
Division of Facilities Management

VA FORM 08-6231, OCT 1978

BID SET DOCUMENTS SUBMISSION

Plotted By: BILL JOHNSON
Save Date: 4/26/2016 10:24 AM
File Name: P:\Land Projects\24059 Veterans Cemeteries\24059.04 Veterans Cemetery - Millsboro\Plan Production\Construction Plan\24059.04-LEGEND-01.dwg

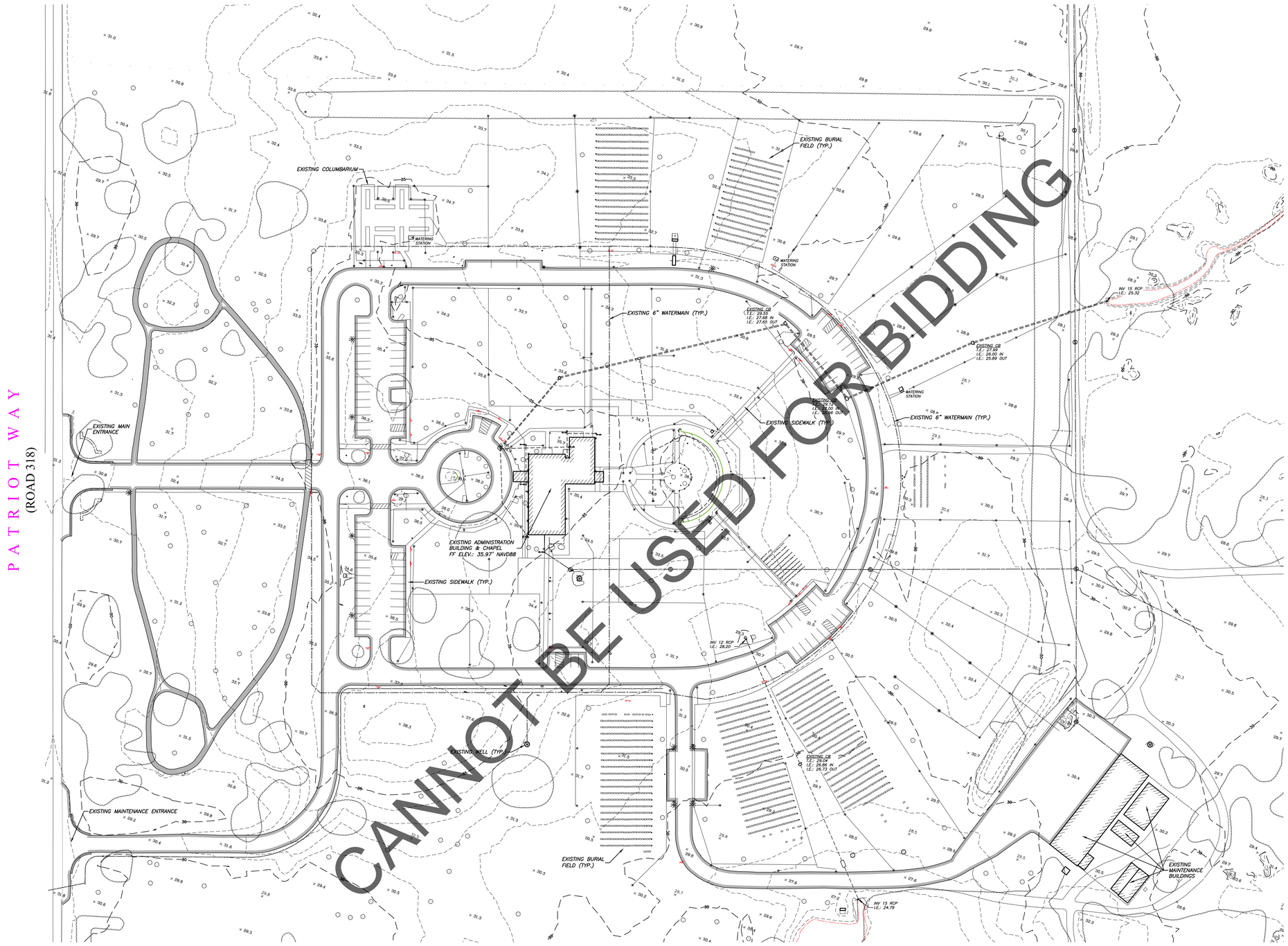

AERIAL TOPOGRAPHY LEGEND

2 LEG SIGN	INTERMEDIATE CONTOUR DEP.
BRIDGE	INTERMEDIATE CONTOUR DEP. DASHED
BUILDING	LIGHT POLE
CANOPY	MISCELLANEOUS
CONCRETE	MISCELLANEOUS SYMBOL
CONCRETE DITCH	PAINT STRIPE
CONTROL POINT	PARKING PAINT STRIPE
CULTIVATED FIELD	PAVED PARKING
CURB	PAVED ROAD
DRAINAGE	POST
ELECTRIC BOX	RETAINING WALL
FENCE	RIP-RAP
FLAGPOLE	SCAR LINE
GUTTER	SHEET EDGE
HEADWALL	SHEET GRID
HEDGELINE	SHEET GRID EDGE
INDEX CONTOUR	SINGLE TREE
INDEX CONTOUR DASHED	SMALL SIGN
INDEX CONTOUR DEP.	SPOT ELEVATION
INDEX CONTOUR DEP. DASHED	TREELINE
INLET	UNPAVED
INTERMEDIATE CONTOUR	VALVE
INTERMEDIATE CONTOUR DASHED	WALL

GRAPHIC SCALE

50 0 25 50 100

1 inch = 50 feet

NORTH

Revisions: Date

CONSULTANTS:

STRUCTURAL
STEINLE CONSTRUCTION ENGINEERS
A DIVISION OF VANDEMARK & LYNCH, INC.
SCE
4305 MILLER ROAD
WILMINGTON, DE 19802, 302-764-7635
www.steinleengineers.com

MECHANICAL/ELECTRICAL
PARAGON ENGINEERING CORPORATION
MECHANICAL/ELECTRICAL
708 Philadelphia Pike
Wilmington, De 19809
ph: 302.762.6010
fax: 302.762.0653

IRRIGATION
Aqua Engineering, Inc.
Innovative Water Solutions
4803 Innovation Drive
Fort Collins, Colorado 80525
Phone (970) 229-9668
FAX (970) 226-3855

GEOTECHNICAL
GTA
GEO-TECHNOLOGY ASSOCIATES, INC.
18 Boulden Circle, Suite 36
New Castle, DE 19720
Tel: 302-326-2100

CEMETERY DESIGN
The LA GROUP
Landscape Architecture & Engineering P.C.
People. Purpose. Place.
40 Long Alley
Saratoga Springs
NY 12866
p: 518-587-8100
f: 518-587-0180
www.thelagroup.com

ARCHITECT/ENGINEER:
VANDEMARK & LYNCH, INC.
ENGINEERS – PLANNERS – SURVEYORS
4305 MILLER ROAD
WILMINGTON, DE 19802/(302) 764-7635
WWW.VANDEMARKLYNCH.COM

STEPHEN L. JOHNSON
REGISTERED PROFESSIONAL ENGINEER
No. 9588
DELAWARE
Expires: 12/31/16

U.S. DEPARTMENT OF VETERANS AFFAIRS

Drawing Title
EXISTING CONDITIONS PLAN/SURVEY

Approved: Project Director

Project Title
DELAWARE VETERANS MEMORIAL CEMETERY

Location
MILLSBORO, DELAWARE

Date 5/02/2016 | Checked SLJ | Drawn WJJ

Project Number DE-13-21

Building Number

Drawing Number V-101

Dwg 03 of 28

State of Delaware
Division of Facilities Management

VA FORM 08-6231, OCT 1978

BID SET DOCUMENTS SUBMISSION

Plotted By: ELL-JOHNSON
Date: Wed, May 04, 2016
File Name: P:\Land Projects\2400\Veterans Ceremonial\2013\4 Veterans Cemetery - Millsboro\Plan Production\Construction Plans\2400-04-PT2DFC-01.dwg

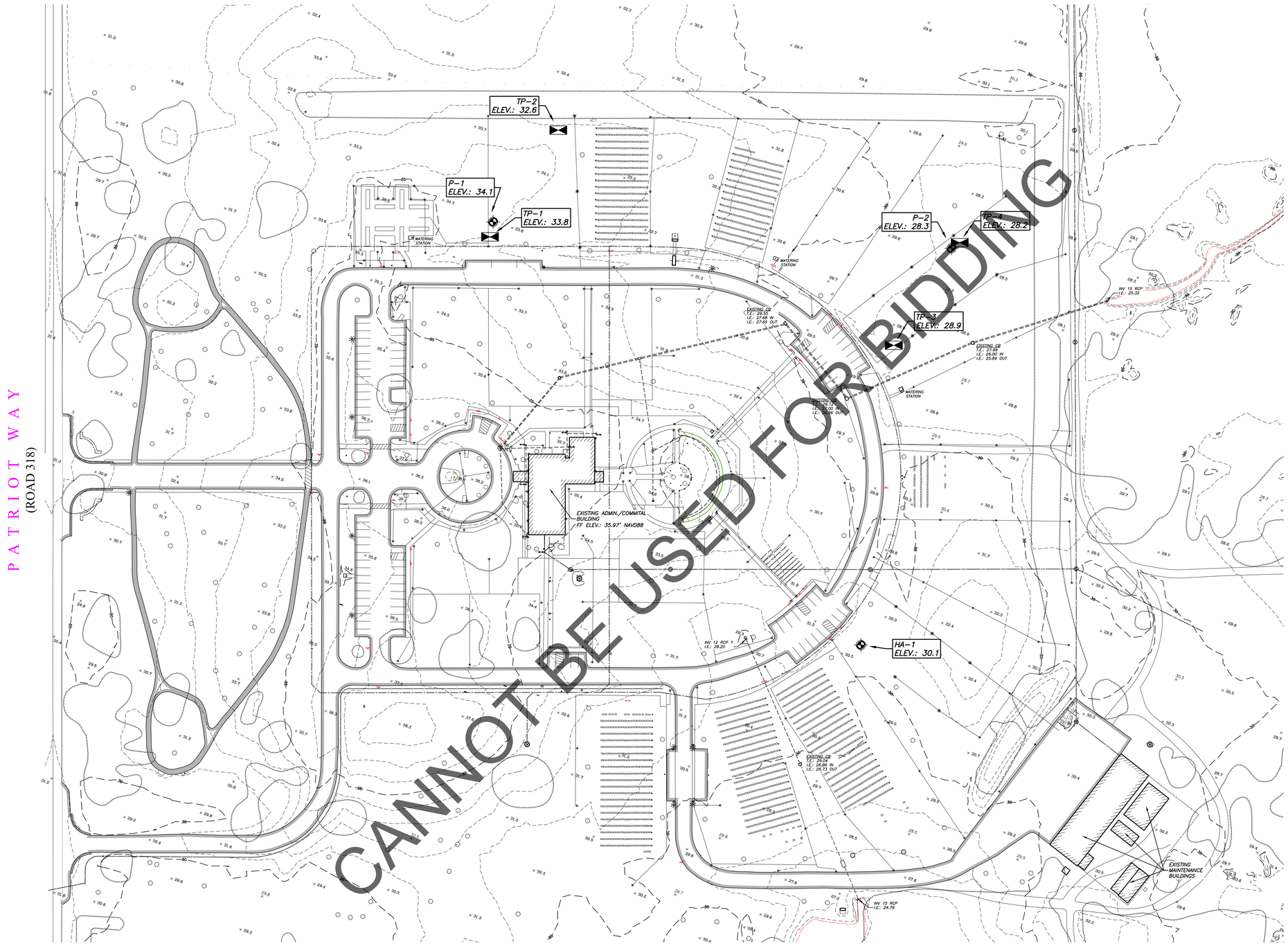

CANNOT BE USED FOR BIDDING

AERIAL TOPOGRAPHY LEGEND

2 LEG SIGN	INTERMEDIATE CONTOUR DEP.
BRIDGE	INTERMEDIATE CONTOUR DEP. DASHED
BUILDING	LIGHT POLE
CANOPY	MISCELLANEOUS
CONCRETE	MISCELLANEOUS SYMBOL
CONCRETE DITCH	PAINT STRIPE
CONTROL POINT	PARKING PAINT STRIPE
CULTIVATED FIELD	PAVED PARKING
CURB	PAVED ROAD
DRAINAGE	POST
ELECTRIC BOX	RETAINING WALL
FENCE	RIP-RAP
FLAGPOLE	SCAR LINE
GUTTER	SHEET EDGE
HEADWALL	SHEET GRID
HEDGELINE	SHEET GRID EDGE
INDEX CONTOUR	SINGLE TREE
INDEX CONTOUR DASHED	SMALL SIGN
INDEX CONTOUR DEP.	SPOT ELEVATION
INDEX CONTOUR DEP. DASHED	TREELINE
INLET	UNPAVED
INTERMEDIATE CONTOUR	VALVE
INTERMEDIATE CONTOUR DASHED	WALL

GRAPHIC SCALE
50 0 25 50 100
1 inch = 50 feet

NORTH

Revisions:	Date

CONSULTANTS:

STRUCTURAL
STEINLE CONSTRUCTION ENGINEERS
A DIVISION OF VANDEMARK & LYNCH, INC.
SCE
4305 MILLER ROAD
WILMINGTON, DE 19802, 302-764-7635
www.steinleengineers.com

MECHANICAL/ELECTRICAL
PARAGON ENGINEERING CORPORATION
MECHANICAL/ELECTRICAL
708 Philadelphia Pike
Wilmington, De 19809
ph: 302.762.6010
fax: 302.762.0653

IRRIGATION
Aqua Engineering, Inc.
Innovative Water Solutions
4803 Innovation Drive
Fort Collins, Colorado 80525
Phone (970) 229-9668
FAX (970) 226-3855

GEOTECHNICAL
GTA
GEO-TECHNOLOGY ASSOCIATES, INC.
18 Boulden Circle, Suite 36
New Castle, DE 19720
Tel: 302-326-2100

CEMETERY DESIGN
The LA GROUP
Landscape Architecture & Engineering P.C.
People. Purpose. Place.
40 Long Alley
Saratoga Springs
NY 12866
p: 518-587-8100
f: 518-587-0180
www.thelagroup.com

ARCHITECT/ENGINEER:
VANDEMARK & LYNCH, INC.
ENGINEERS – PLANNERS – SURVEYORS
4305 MILLER ROAD
WILMINGTON, DE 19802/(302) 764-7635
WWW.VANDEMARKLYNCH.COM

STEPHEN L. JONES
REGISTERED
No. 9396
DELAWARE
PROFESSIONAL ENGINEER
For Vandemark & Lynch, Inc.

U.S. DEPARTMENT OF VETERANS AFFAIRS

Drawing Title
GEOTECHNICAL SITE PLAN

Approved: Project Director

Project Title
DELAWARE VETERANS MEMORIAL CEMETERY

Location
MILLSBORO, DELAWARE

Date 5/02/2016 | Checked SLJ | Drawn WJJ

Project Number
DE-13-21

Building Number

Drawing Number
B-101
Dwg 04 of 28

State of Delaware
Division of Facilities Management

VA FORM 08-6231, OCT 1978

BID SET DOCUMENTS SUBMISSION

Plotted By: ELLJONSON
Date: 5/2/2016 9:37 AM
File Name: P:\Land Projects\2400\Veterans Ceremonies\400514 Veterans Cemetery - Millsboro\Plan Production\Construction Plans\400514-GEOT-01.dwg

CANNOT BE USED FOR BIDDING

GEO-TECHNOLOGY ASSOCIATES, INC.

GEOTECHNICAL AND
ENVIRONMENTAL CONSULTANTS

A Practicing Geoprofessional Business Association Member Firm

February 22, 2016

Vandemark and Lynch, Inc.
4305 Miller Road
Wilmington, Delaware 19802

Attn: Mr. Stephen Johns, P.E., P.L.S.

Re: Geotechnical Services
Delaware Veterans Cemetery Enhancements- Millsboro
Sussex County, Delaware

Dear Stephen,

Pursuant to our agreement dated January 26, 2016, Geo-Technology Associates, Inc. (GTA) has performed a subsurface exploration in the pre-planned crypt areas located in Sussex County, Delaware. Provided herein are the results of the subsurface exploration, groundwater conditions, and preliminary recommendations for design and construction of the proposed crypts.

Proposed Construction

GTA understands that the proposed additions consist of two crypt fields, requiring excavations of up to 8 feet below the ground surface. The provided preliminary plan titled *Delaware Veterans Memorial Cemetery Millsboro (Sussex County) Understanding of Project*, prepared by Vandermark and Lynch, Inc. (V&L), indicates existing conditions and the layout of proposed crypts, and service roads for the current expansion phase, as well as layouts for crypts and columbarium expansions in future phases. Additionally, GTA was provided a plan titled *Grading and Sediment and Erosion Control Plan*, prepared by George, Miles & Buhr, LLC Architects and Engineers, dated March 2009, which indicates existing topography, and site features.

GTA understands that the proposed crypt fields will be constructed matching the existing crypt fields. The construction will consists of an 8-feet deep excavation below the existing ground surface and replacement with about 1 foot of open aggregate stone. We further understand the crypts will be set on the stone bedding. The crypts have holes on the bottom to counteract buoyancy. We further understand that the crypts are equipped with underdrains, which are tied into the permanent storm drain system.

Cemetery personnel indicated that the existing crypt fields were constructed with a geosynthetic clay liner beneath the stone bedding for environmental reasons. The personnel indicated the clay liner was designed to impede contaminants exiting the crypts, such as

formaldehyde and human decay, prevent the discharge of water trapped within the excavation into the groundwater and these constituents showing up in nearby water supply wells. Cemetery personnel also informed GTA that the backfill used in the crypt fields were off-site materials. Since we did not excavate adjacent an existing crypt, this information could be not confirmed. The existing plans did not show these details.

Geology

According to the *Geological Map of New Castle County Delaware* (DGS, 2005), published by the Delaware Geological Survey, the site vicinity is situated in the Coastal Plain Physiographic, which is characterized by undifferentiated and interlayered sedimentary deposits derived from eroded and transported rock formations to the north. Specifically, the map indicates that the site is underlain by the Pleistocene Age Lynch Heights Formation consisting of light-gray to brown to light yellowish brown, fine to very fine grained quartic, feldspathic and micaceous sand with cross bedded sands and layers of clayey silt and sandy silt throughout. Refer to the geologic publication for additional information.

The Delaware Geologic Information Resource (DGIR) map viewer <http://maps.dgs.udel.edu/dgir/> indicates the groundwater table ranges from 10 to 12 feet below ground surface during wet conditions and 12 to 14 feet below ground surface during dry conditions within the vicinity of the site.

Subsurface Exploration

The subsurface exploration was performed on February 3 and 16, 2016. On February 3, 2016 test pits were excavated using cemetery personnel and a Case 580L backhoe. Four test pits, identified as TP-1 through TP-4 were excavated to a depth of 10 feet below the existing ground surface. Two temporary piezometers, identified as P-1 and P-2, were installed to depths of 8 feet below the existing ground surface using a hand auger probe, to monitor groundwater conditions. On February 16, 2016, one hand auger probe, identified as HA-1, was advanced to a depth of 10 feet below the existing ground surface. The soil descriptions indicated on the logs are based on visual observations of the individual soil samples using the Unified Soil Classification System as summarized in the Notes for Exploration Logs attached to this letter. The test pit, hand auger probe, and temporary piezometer locations are indicated on the attached *Exploration Location Plan, Figure 2*. GTA located the test pit, hand auger probe and piezometer locations by measuring from existing features. The elevations on the logs were obtained from the plan titled *Grading and Sediment and Erosion Control Plan*, prepared by George, Miles & Buhr, LLC Architects and Engineers, dated March 2009. As such, locations and elevations of the explorations should be considered approximate.

At the time the exploration was performed, the test pits and hand auger probes encountered topsoil ranging from 3 to 10 inches in thickness. Below the topsoil, Test Pits TP-1 through TP-4, and Hand Auger Probe HA-1 encountered granular soils, visually classified as silty sand and clayey sand, to the termination depth. Test Pits TP-1 through TP-4 and Hand Auger Probe HA-1 were terminated at 10 feet below the existing ground surface.

Test Pits TP-1 through TP-4, and Hand Auger Probe HA-1 were dry to their termination depths. GTA returned to the site on February 16, 2016; no water was observed in the piezometers.

Conclusions and Recommendations

Based on our observations made during the subsurface exploration, construction of the proposed crypts fields is considered feasible. Based on groundwater observations made thus far, groundwater is not expected to impact construction of the proposed crypts. We recommend a seasonal high water table 10 feet to 12 feet below the ground surface for design purposes.

Based on the results of testing, we estimate the seasonal high water at to be about 8 to 10 feet below the ground surface in the areas of proposed crypts. We recommend that a minimum 6-inch thick AASHTO NO. 57 stone mat be constructed at the base of the excavation. The underdrains should consist of 4-inch diameter perforated HDPE pipe, connected to the permanent storm drain system. We further recommend that the stone base extend beyond the extent of the crypts in plan direction by approximately 3 feet.

The crypt fields will have a proposed subgrade elevation at EL 20 to 25, about 8 feet below existing grades. The excavations will be made in medium dense sands. The excavations will likely be performed using conventional construction equipment. Excavation support may be required to protect adjacent monuments, parking lots, and associated infrastructure. All excavations should be sloped or shored in accordance with OSHA trench safety regulations for Class C (sandy) soil types. Excavations during construction should be carried out in a manner that ground movement or slope failures will not occur.

Provided the subgrade elevations are not lowered, groundwater levels should not be a problem during construction of the proposed crypts or during occupancy period. Problems associated with excavations at or below groundwater levels include seepage of water into the excavations, unstable sidewalls, saturated soils, and softening of subgrades. Although not observed during our exploration, it is possible that perched water may be encountered during periods of prolonged precipitation or thaw of frozen soils. If seepage from perched water is encountered from the sidewalls of the excavation, drain strips can be installed along the outermost walls of the crypts to intercept seepage and convey it to the underdrains installed in the base stone. These systems typically have standard couplers to HPDE and PVC pipes. Alternatively, an exterior drain can be constructed around the perimeter of the crypts, to collect seepage from sidewalls and from the backfill placed around the crypt excavation. This drain should be wrapped in about 6 inches of AASHTO #57 stone, and wrapped in geotextile to prevent clogging or sediment from the soils backfill above.

GTA should be provided the opportunity to review preliminary designs and perform additional testing if considered necessary. The subgrades should be evaluated during construction given the variable subsurface conditions. This is to evaluate compliance with the design concepts, specifications or recommendations, and to allow for field changes in the event that the soils or groundwater conditions differ from that anticipated prior to that start of construction.

Limitations

This report, including all supporting logs, field data, field notes, laboratory test data, calculations, estimates and other documents prepared by GTA in connection with this Project have been prepared in accordance with generally accepted engineering practice. All terms and conditions set forth in the Agreement and the General Provisions attached thereto are incorporated herein by

reference. No warranty, express or implied, is made herein. Use and reproduction of this report by any other person without the expressed written permission of GTA is unauthorized and such use is at the sole risk of the user.

The analysis and recommendations contained in this report are based on the data obtained from limited observation and testing of the encountered materials. Test pits indicate soil conditions only at specific locations and times and only at the depths penetrated. They do not necessarily reflect strata or variations that may exist between test pit locations. Consequently, the analysis and recommendations must be considered preliminary until the subsurface conditions can be verified by direct observation at the time of construction. If variations of subsurface conditions from those described in this report are noted during construction, recommendations in this report may need to be re-evaluated.

In the event that any changes in the nature, design, or location of the facilities are planned, the conclusions and recommendations contained in this report should not be considered valid unless the changes are reviewed and conclusions of this report are verified in writing. Geo-Technology Associates, Inc. is not responsible for any claims, damages, or liability associated with interpretation of subsurface data or reuse of the subsurface data or engineering analysis without the expressed written authorization of Geo-Technology Associates, Inc.

We appreciate the opportunity to be of assistance on this project. Should you have questions, please contact our office at (302) 326-2100.

Very truly yours,
GEO-TECHNOLOGY ASSOCIATES, INC.

Matthew Kerezsi
Staff Geotechnical Professional

Meghan Lester, P.E.
Vice President

MEGHAN LESTER REGISTERED No. 13632 DELAWARE PROFESSIONAL ENGINEER

MK/ML/ amd
160076

Attachments:
- ASFE Important Information Regarding Your Geotechnical Engineering Report
- Figure 1: Site Location Map
- Figure 2: Exploration Location Plan
- Notes for Exploration Logs
- Test Pit Logs (TP-1 through TP-4)
- Hand Auger Probe Log (P-1 through P-2, and HA-1)

Important Information About Your
Geotechnical Engineering Report

Subsurface problems are a principal cause of construction delays, cost overruns, claims, and disputes.

The following information is provided to help you manage your risks.

Geotechnical Services Are Performed for Specific Purposes, Persons, and Projects

Geotechnical engineers structure their services to meet the specific needs of their clients. A geotechnical engineering study conducted for a civil engineer may not fulfill the needs of a construction contractor or even another civil engineer. Because each geotechnical engineering study is unique, each geotechnical engineering report is unique, prepared *solely* for the client. No one except you should rely on your geotechnical engineering report without first conferring with the geotechnical engineer who prepared it. *And no one — not even you —* should apply the report for any purpose or project except the one originally contemplated.

Read the Full Report

Serious problems have occurred because those relying on a geotechnical engineering report did not read it all. Do not rely on an executive summary. Do not read selected elements only.

A Geotechnical Engineering Report Is Based on A Unique Set of Project-Specific Factors

Geotechnical engineers consider a number of unique, project-specific factors when establishing the scope of a study. Typical factors include: the client's goals, objectives, and risk management preferences; the general nature of the structure involved, its size, and configuration; the location of the structure on the site; and other planned or existing site improvements, such as access roads, parking lots, and underground utilities. Unless the geotechnical engineer who conducted the study specifically indicates otherwise, do not rely on a geotechnical engineering report that was:
- not prepared for you,
- not prepared for your project,
- not prepared for the specific site explored, or
- completed before important project changes were made.

Typical changes that can erode the reliability of an existing geotechnical engineering report include those that affect:
- the function of the proposed structure, as when it's changed from a parking garage to an office building, or from a light industrial plant to a refrigerated warehouse,
- elevation, configuration, location, orientation, or weight of the proposed structure,
- composition of the design team, or
- project ownership.

As a general rule, *always* inform your geotechnical engineer of project changes—even minor ones—and request an assessment of their impact. *Geotechnical engineers cannot accept responsibility or liability for problems that occur because their reports do not consider developments of which they were not informed.*

Subsurface Conditions Can Change

A geotechnical engineering report is based on conditions that existed at the time the study was performed. *Do not rely on a geotechnical engineering report* whose adequacy may have been affected by: the passage of time; by man-made events, such as construction on or adjacent to the site; or by natural events, such as floods, earthquakes, or groundwater fluctuations. *Always* contact the geotechnical engineer before applying the report to determine if it is still reliable. A minor amount of additional testing or analysis could prevent major problems.

Most Geotechnical Findings Are Professional Opinions

Site exploration identifies subsurface conditions only at those points where subsurface tests are conducted or samples are taken. Geotechnical engineers review field and laboratory data and then apply their professional judgment to render an opinion about subsurface conditions throughout the site. Actual subsurface conditions may differ—sometimes significantly—from those indicated in your report. Retaining the geotechnical engineer who developed your report to provide construction observation is the most effective method of managing the risks associated with unanticipated conditions.

A Report's Recommendations Are *Not* Final

Do not overrely on the construction recommendations included in your report. *Those recommendations are not final,* because geotechnical engineers develop them principally from judgment and opinion. Geotechnical engineers can finalize their recommendations only by observing actual subsurface conditions revealed during construction. *The geotechnical engineer who developed your report cannot assume responsibility or liability for the report's recommendations if that engineer does not perform construction observation.*

A Geotechnical Engineering Report Is Subject to Misinterpretation

Other design team members' misinterpretation of geotechnical engineering reports has resulted in costly problems. Lower that risk by having your geotechnical engineer confer with appropriate members of the design team after submitting the report. Also retain your geotechnical engineer to review pertinent elements of the design team's plans and specifications. Contractors can also misinterpret a geotechnical engineering report. Reduce that risk by having your geotechnical engineer participate in prebid and preconstruction conferences, and by providing construction observation.

Do Not Redraw the Engineer's Logs

Geotechnical engineers prepare final boring and testing logs based upon their interpretation of field logs and laboratory data. To prevent errors or omissions, the logs included in a geotechnical engineering report should *never* be redrawn for inclusion in architectural or other design drawings. Only photographic or electronic reproduction is acceptable, *but recognize that separating logs from the report can elevate risk.*

Give Contractors a Complete Report and Guidance

Some owners and design professionals mistakenly believe they can make contractors liable for unanticipated subsurface conditions by limiting what they provide for bid preparation. To help prevent costly problems, give contractors the complete geotechnical engineering report, *but* preface it with a clearly written letter of transmittal. In that letter, advise contractors that the report was not prepared for purposes of bid development and that the report's accuracy is limited; encourage them to confer with the geotechnical engineer who prepared the report (a modest fee may be required) and/or to conduct additional study to obtain the specific types of information they need or prefer. A prebid conference can also be valuable. *Be sure contractors have sufficient time* to perform additional study. Only then might you be in a position to give contractors the best information available to you, while requiring them to at least share some of the financial responsibilities stemming from unanticipated conditions.

Read Responsibility Provisions Closely

Some clients, design professionals, and contractors do not recognize that geotechnical engineering is far less exact than other engineering disciplines. This lack of understanding has created unrealistic expectations that have led to disappointments, claims, and disputes. To help reduce the risk of such outcomes, geotechnical engineers commonly include a variety of explanatory provisions in their reports. Sometimes labeled "limitations" many of these provisions indicate where geotechnical engineers' responsibilities begin and end, to help others recognize their own responsibilities and risks. *Read these provisions closely.* Ask questions. Your geotechnical engineer should respond fully and frankly.

Geoenvironmental Concerns Are Not Covered

The equipment, techniques, and personnel used to perform a *geoenvironmental* study differ significantly from those used to perform a *geotechnical* study. For that reason, a geotechnical engineering report does not usually relate any geoenvironmental findings, conclusions, or recommendations; e.g., about the likelihood of encountering underground storage tanks or regulated contaminants. *Unanticipated environmental problems have led to numerous project failures.* If you have not yet obtained your own geoenvironmental information, ask your geotechnical consultant for risk management guidance. *Do not rely on an environmental report prepared for someone else.*

Obtain Professional Assistance To Deal with Mold

Diverse strategies can be applied during building design, construction, operation, and maintenance to prevent significant amounts of mold from growing on indoor surfaces. To be effective, all such strategies should be devised for the *express purpose* of mold prevention, integrated into a comprehensive plan, and executed with diligent oversight by a professional mold prevention consultant. Because just a small amount of water or moisture can lead to the development of severe mold infestations, a number of mold prevention strategies focus on keeping building surfaces dry. While groundwater, water infiltration, and similar issues may have been addressed as part of the geotechnical engineering study whose findings are conveyed in this report, the geotechnical engineer in charge of this project is not a mold prevention consultant; *none of the services performed in connection with the geotechnical engineer's study were designed or conducted for the purpose of mold prevention. Proper implementation of the recommendations conveyed in this report will not of itself be sufficient to prevent mold from growing in or on the structure involved.*

Rely, on Your ASFE-Member Geotechncial Engineer for Additional Assistance

Membership in ASFE/The Best People on Earth exposes geotechnical engineers to a wide array of risk management techniques that can be of genuine benefit for everyone involved with a construction project. Confer with you ASFE-member geotechnical engineer for more information.

ASFE
The Best People on Earth
8811 Colesville Road/Suite G106, Silver Spring, MD 20910
Telephone: 301/565-2733 Facsimile: 301/589-2017
e-mail: info@asfe.org www.asfe.org

Copyright 2004 by ASFE, Inc. Duplication, reproduction, or copying of this document, in whole or in part, by any means whatsoever, is strictly prohibited, except with ASFE's specific written permission. Excerpting, quoting, or otherwise extracting wording from this document is permitted only with the express written permission of ASFE, and only for purposes of scholarly research or book review. Only members of ASFE may use this document as a complement to or as an element of a geotechnical engineering report. Any other firm, individual, or other entity that so uses this document without being an ASFE member could be commiting negligent or intentional (fraudulent) misrepresentation.

IIGER06045.0M

Notes:
1) Base map obtained from Google Earth Imagery, Inc. from July 9, 2015.
2) Site Location Map should be reviewed in conjunction with GTA Report No. 160076 Delaware Veterans Cemetery Millsboro for complete evaluation.

GEO-TECHNOLOGY ASSOCIATES, INC. *Geotechnical and Environmental Consultants* 18 Boulden Circle, Suite 36 New Castle, Delaware 19720 (302) 326-2100 Fax (302) 326-2399	SITE LOCATION MAP DELAWARE VETERANS CEMETARY MILLSBORO SUSSEX COUNTY, DELAWARE

SCALE	DATE	DRAWN BY	REVIEW BY	JOB NO.	FIGURE NO.
NTS	FEB 2016	GOOGLE	ML	160076	1

GEOTECHNICAL SITE PLAN
SEE
SHEET B-101

Revisions: | Date

CONSULTANTS:

STRUCTURAL
STEINLE CONSTRUCTION ENGINEERS
A DIVISION OF VANDEMARK & LYNCH, INC.
SCE
4305 MILLER ROAD
WILMINGTON, DE 19802, 302-764-7635
www.steinleengineers.com

MECHANICAL/ELECTRICAL
PARAGON ENGINEERING CORPORATION
MECHANICAL/ELECTRICAL
708 Philadelphia Pike
Wilmington, DE 19809
ph: 302.762.6010
fax: 302.762.0653

IRRIGATION
Aqua Engineering, Inc.
Innovative Water Solutions
4803 Innovation Drive
Fort Collins, Colorado 80525
Phone (970) 229-9668
FAX (970) 226-3855

GEOTECHNICAL
GEO-TECHNOLOGY ASSOCIATES, INC.
18 Boulden Circle, Suite 36
New Castle, DE 19720
Tel: 302-326-2100

CEMETERY DESIGN
The LA GROUP
Landscape Architecture & Engineering P.C.
People. Purpose. Place.
40 Long Alley
Saratoga Springs
NY 12866
p: 518-587-8100
f: 518-587-0180
www.thelagroup.com

ARCHITECT/ENGINEER:
VANDEMARK & LYNCH, INC.
ENGINEERS – PLANNERS – SURVEYORS
4305 MILLER ROAD
WILMINGTON, DE 19802/(302) 764-7635
WWW.VANDEMARKLYNCH.COM

U.S. DEPARTMENT OF VETERANS AFFAIRS

Drawing Title	Project Title	Project Number
BORING LOGS	DELAWARE VETERANS MEMORIAL CEMETERY	DE-13-21
		Building Number:
Approved: Project Director	Location: MILLSBORO, DELAWARE	Drawing Number: B-102
	Date: 5/02/2016 · Checked: SLJ · Drawn: WJJ	Dwg 05 of 28

State of Delaware
Division of Facilities Management

VA FORM 08-6231, OCT 1978

BID SET DOCUMENTS SUBMISSION

Plotted By: BILL JOHNSON
Save Date: 4/18/2016 9:43 AM
File Name: P:\Land Projects\24059 Veterans Cemeteries\24059.04 Veterans Cemetery - Millsboro\Plan Production\Construction Plan\24059.04-GEOT-02.dwg

NOTES FOR EXPLORATION LOGS

KEY TO USCS TERMINOLOGY AND GRAPHIC SYMBOLS

MAJOR DIVISIONS (BASED UPON ASTM D 2488)			SYMBOLS LETTER
COARSE - GRAINED SOILS	GRAVEL AND GRAVELY SOILS	CLEAN GRAVELS (LESS THAN 5% PASSING THE NO. 200 SIEVE)	GW
			GP
	MORE THAN 50% OF COARSE FRACTION RETAINED ON NO. 4 SIEVE	GRAVELS WITH FINES (MORE THAN 15% PASSING THE NO. 200 SIEVE)	GM
			GC
MORE THAN 50% OF MATERIAL IS LARGER THAN NO. 200 SIEVE SIZE	SAND AND SANDY SOILS	CLEAN SANDS (LESS THAN 5% PASSING THE NO. 200 SIEVE)	SW
			SP
	MORE THAN 50% OF COARSE FRACTION PASSING ON NO. 4 SIEVE	SANDS WITH FINES (MORE THAN 15% PASSING THE NO. 200 SIEVE)	SM
			SC
FINE - GRAINED SOILS	SILTS AND CLAYS	SILT OR CLAY (<15% RETAINED THE NO. 200 SIEVE)	ML
		SILT OR CLAY WITH SAND OR GRAVEL (15% TO 30% RETAINED THE NO. 200 SIEVE)	CL
	LIQUID LIMIT LESS THAN 50	SANDY OR GRAVELY SILT OR CLAY (>30% RETAINED THE NO. 200 SIEVE)	OL
MORE THAN 50% OF MATERIAL IS SMALLER THAN NO. 200 SIEVE SIZE	SILTS AND CLAYS	SILT OR CLAY (<15% RETAINED THE NO. 200 SIEVE)	MH
		SILT OR CLAY WITH SAND OR GRAVEL (15% TO 30% RETAINED THE NO. 200 SIEVE)	CH
	LIQUID LIMIT GREATER THAN 50	SANDY OR GRAVELY SILT OR CLAY (>30% RETAINED THE NO. 200 SIEVE)	OH
HIGHLY ORGANIC SOILS			PT

NOTE: DUAL SYMBOLS ARE USED TO INDICATE COARSE-GRAINED SOILS CONTAINING AN ESTIMATED 10% FINES BY VISUAL CLASSIFICATION OR WHEN THE SOIL HAS BETWEEN 5 AND 12 PERCENT FINES FROM LABORATORY TESTS; AND FOR FINE-GRAINED SOILS WHEN THE PLOT OF LIQUID LIMIT & PLASTICITY INDEX VALUES FALLS IN THE PLASTICITY CHART'S CROSSHATCHED AREA. RESULTS OF LABORATORY TESTING ARE USED TO SUPPLEMENT THE CLASSIFICATION OF THE SOILS BASED ON THE VISUAL-MANUAL PROCEDURES OF ASTM D2488.

ADDITIONAL TERMINOLOGY AND GRAPHIC SYMBOLS

	DESCRIPTION	"N" VALUE
ADDITIONAL DESIGNATION	TOPSOIL	
	MAN-MADE FILL	
	GLACIAL TILL	
	COBBLES AND BOULDERS	
RESIDUAL SOIL DESIGNATION	HIGHLY WEATHERED ROCK	50 TO 50/1"
	PARTIALLY WEATHERED ROCK	MORE THAN 50 BLOWS FOR 1" PENETRATION, AUGER PENETRABLE

COARSE-GRAINED SOILS (GRAVEL AND SAND)

DESIGNATION	BLOWS PER FOOT (BPF) "N"
VERY LOOSE	0 - 4
LOOSE	5 - 10
MEDIUM DENSE	11 - 30
DENSE	31 - 50
VERY DENSE	>50

NOTE: "N" VALUE DETERMINED AS PER ASTM D1586

FINE-GRAINED SOILS (SILT AND CLAY)

CONSISTENCY	BPF "N"
VERY SOFT	<2
SOFT	2 - 4
MEDIUM STIFF	5 - 8
STIFF	9 - 15
VERY STIFF	16 - 30
HARD	>30

NOTE: ADDITIONAL DESIGNATIONS TO ADVANCE SAMPLER INDICATED IN BLOW COUNT COLUMN:
WOH = WEIGHT OF HAMMER
WOR = WEIGHT OF ROD(S)

SAMPLE TYPE

DESIGNATION	SYMBOL
SPLIT-SPOON	S-
SHELBY TUBE	U-
ROCK CORE	R-

WATER DESIGNATION

DESCRIPTION	SYMBOL
ENCOUNTERED DURING DRILLING	▽
UPON COMPLETION OF DRILLING	▼
24 HOURS AFTER COMPLETION	▽

NOTE: WATER OBSERVATIONS WERE MADE AT THE TIME INDICATED. POROSITY OF SOIL STRATA, WEATHER CONDITIONS, SITE TOPOGRAPHY, ETC. MAY CAUSE WATER LEVEL CHANGES.

LOG OF AUGER PROBE NO. TP-1

Sheet 1 of 1

PROJECT: **Delaware Veterans Cemetery Enhancements-Millsboro** PROJECT NO.: **160076**
PROJECT LOCATION: **Millsboro, Sussex County, Delaware**
CLIENT: **Vandemark and Lynch, Inc.**
GROUNDWATER ENCOUNTERED: **Dry**
DATE STARTED: **2/3/2016** GROUND SURFACE ELEVATION: **33.8**
DATE COMPLETED: **2/3/2016** DATUM: **Topo**
CONTRACTOR: **Cemetery Maintenance Staff** LOGGED BY: **M. Kerezsi**
CHECKED BY: **M. Lester**

ELEVATION (ft.)	DEPTH (ft.)	USCS	DESCRIPTION	REMARKS
	0		Topsoil +/- 7 inches	
33.2		SM	Light brown, moist, Silty SAND	
			Tan and orange, moist, Silty SAND	
			Tan, moist, Silty SAND	
			White and tan, moist, Silty SAND	
23.8	10		Test pit terminated at 10.0 feet.	

NOTES: **Surveyed locations and ground surface elevations provided by Vandemark & Lynch, Inc.**

GEO-TECHNOLOGY ASSOCIATES, INC.
18 Boulden Circle, Suite 36
New Castle, DE 19720
LOG OF AUGER PROBE NO. TP-1
Sheet 1 of 1

LOG OF AUGER PROBE NO. TP-2

Sheet 1 of 1

PROJECT: **Delaware Veterans Cemetery Enhancements-Millsboro** PROJECT NO.: **160076**
PROJECT LOCATION: **Millsboro, Sussex County, Delaware**
CLIENT: **Vandemark and Lynch, Inc.**
GROUNDWATER ENCOUNTERED: **Dry**
DATE STARTED: **2/3/2016** GROUND SURFACE ELEVATION: **32.6**
DATE COMPLETED: **2/3/2016** DATUM: **Topo**
CONTRACTOR: **Cemetery Maintenance Staff** LOGGED BY: **M. Kerezsi**
CHECKED BY: **M. Lester**

ELEVATION (ft.)	DEPTH (ft.)	USCS	DESCRIPTION	REMARKS
	0		Topsoil +/- 10 inches	
31.8		SM	Light brown and tan, moist, Silty SAND	
			Tan and orange, moist, Silty SAND	
25.1		SC	White and brown, moist, Clayey SAND	
22.6	10		Test pit terminated at 10.0 feet.	

NOTES: **Surveyed locations and ground surface elevations provided by Vandemark & Lynch, Inc.**

GEO-TECHNOLOGY ASSOCIATES, INC.
18 Boulden Circle, Suite 36
New Castle, DE 19720
LOG OF AUGER PROBE NO. TP-2
Sheet 1 of 1

LOG OF AUGER PROBE NO. TP-3

Sheet 1 of 1

PROJECT: **Delaware Veterans Cemetery Enhancements-Millsboro** PROJECT NO.: **160076**
PROJECT LOCATION: **Millsboro, Sussex County, Delaware**
CLIENT: **Vandemark and Lynch, Inc.**
GROUNDWATER ENCOUNTERED: **Dry**
DATE STARTED: **2/3/2016** GROUND SURFACE ELEVATION: **28.9**
DATE COMPLETED: **2/3/2016** DATUM: **Topo**
CONTRACTOR: **Cemetery Maintenance Staff** LOGGED BY: **M. Kerezsi**
CHECKED BY: **M. Lester**

ELEVATION (ft.)	DEPTH (ft.)	USCS	DESCRIPTION	REMARKS
	0		Topsoil +/- 4 inches	
28.6		SM	Dark brown, moist, Silty SAND	
			Light brown, moist, Silty SAND	
25.4		SC	Tan and orange, moist, Clayey SAND, contains gravel	
			Orange and white, moist, Clayey SAND	
21.2		SM	White and tan, moist, Silty SAND	
18.9	10		Test pit terminated at 10.0 feet.	

NOTES: **Surveyed locations and ground surface elevations provided by Vandemark & Lynch, Inc.**

GEO-TECHNOLOGY ASSOCIATES, INC.
18 Boulden Circle, Suite 36
New Castle, DE 19720
LOG OF AUGER PROBE NO. TP-3
Sheet 1 of 1

LOG OF AUGER PROBE NO. TP-4

Sheet 1 of 1

PROJECT: **Delaware Veterans Cemetery Enhancements-Millsboro** PROJECT NO.: **160076**
PROJECT LOCATION: **Millsboro, Sussex County, Delaware**
CLIENT: **Vandemark and Lynch, Inc.**
GROUNDWATER ENCOUNTERED: **Dry**
DATE STARTED: **2/3/2016** GROUND SURFACE ELEVATION: **28.2**
DATE COMPLETED: **2/3/2016** DATUM: **Topo**
CONTRACTOR: **Cemetery Maintenance Staff** LOGGED BY: **M. Kerezsi**
CHECKED BY: **M. Lester**

ELEVATION (ft.)	DEPTH (ft.)	USCS	DESCRIPTION	REMARKS
	0		Topsoil +/- 6 inches	
27.7		SM	Light brown, moist, Silty SAND	
25.2		SC	Orange and white, moist, Clayey SAND	
20.8		SM	Orange, moist, Silty SAND, contains gravel	
18.2	10		Test pit terminated at 10.0 feet.	

NOTES: **Surveyed locations and ground surface elevations provided by Vandemark & Lynch, Inc.**

GEO-TECHNOLOGY ASSOCIATES, INC.
18 Boulden Circle, Suite 36
New Castle, DE 19720
LOG OF AUGER PROBE NO. TP-4
Sheet 1 of 1

LOG OF AUGER PROBE NO. P-1

Sheet 1 of 1

PROJECT: **Delaware Veterans Cemetery Enhancements-Millsboro** PROJECT NO.: **160076**
PROJECT LOCATION: **Millsboro, Sussex County, Delaware**
CLIENT: **Vandemark and Lynch, Inc.**
GROUNDWATER ENCOUNTERED: **Dry**
DATE STARTED: **2/3/2016** GROUND SURFACE ELEVATION: **34.1**
DATE COMPLETED: **2/3/2016** DATUM: **Survey**
CONTRACTOR: **GTA** LOGGED BY: **M. Kerezsi**
CHECKED BY: **M. Lester**

ELEVATION (ft.)	DEPTH (ft.)	USCS	DESCRIPTION	REMARKS
	0	TS	Topsoil +/- 6 inches	
33.6		SM	Light brown, moist, Silty SAND	
			Tan and orange, moist, Silty SAND	
			Tan, moist, Silty SAND	
			White and tan, moist, Silty SAND	
26.1	8		Hand Auger terminated at 8.0 feet for Piezometer P-1	

NOTES: **Surveyed locations and ground surface elevations provided by Vandemark & Lynch, Inc.**

GEO-TECHNOLOGY ASSOCIATES, INC.
18 Boulden Circle, Suite 36
New Castle, DE 19720
LOG OF AUGER PROBE NO. P-1
Sheet 1 of 1

LOG OF AUGER PROBE NO. P-2

Sheet 1 of 1

PROJECT: **Delaware Veterans Cemetery Enhancements-Millsboro** PROJECT NO.: **160076**
PROJECT LOCATION: **Millsboro, Sussex County, Delaware**
CLIENT: **Vandemark and Lynch, Inc.**
GROUNDWATER ENCOUNTERED: **Dry**
DATE STARTED: **2/3/2016** GROUND SURFACE ELEVATION: **28.3**
DATE COMPLETED: **2/3/2016** DATUM: **Topo**
CONTRACTOR: **GTA** LOGGED BY: **M. Kerezsi**
CHECKED BY: **M. Lester**

ELEVATION (ft.)	DEPTH (ft.)	USCS	DESCRIPTION	REMARKS
	0	TS	Topsoil +/- 6 inches	
27.8		SM	Light brown, moist, Silty SAND	
25.4		SC	Orange and white, moist, Clayey SAND	
21.3		SM	Orange, moist, Silty SAND, contains gravel	
20.3	8		Hand Auger terminated at 8.0 feet for Piezometer P-2.	

NOTES: **Surveyed locations and ground surface elevations provided by Vandemark & Lynch, Inc.**

GEO-TECHNOLOGY ASSOCIATES, INC.
18 Boulden Circle, Suite 36
New Castle, DE 19720
LOG OF AUGER PROBE NO. P-2
Sheet 1 of 1

LOG OF AUGER PROBE NO. HA-1

Sheet 1 of 1

PROJECT: **Delaware Veterans Cemetery Enhancements-Millsboro** PROJECT NO.: **160076**
PROJECT LOCATION: **Millsboro, Sussex County, Delaware**
CLIENT: **Vandemark and Lynch, Inc.**
GROUNDWATER ENCOUNTERED: **Dry**
DATE STARTED: **2/16/2016** GROUND SURFACE ELEVATION: **30.1**
DATE COMPLETED: **2/16/2016** DATUM: **Topo**
CONTRACTOR: **GTA** LOGGED BY: **M. Kerezsi**
CHECKED BY: **M. Lester**

ELEVATION (ft.)	DEPTH (ft.)	USCS	DESCRIPTION	REMARKS
	0	TS	Topsoil +/- 2 inches	
29.8		SM	Dark brown, moist, Silty SAND	
			Same, Tan	
			Tan and orange, moist, Silty SAND	
			Light brown, orange, and white, moist Silty SAND	
			Same	
			Tan, moist, Silty SAND	
20.1	10		Hand Auger Probe terminated at 10.0 feet.	

NOTES: **Surveyed locations and ground surface elevations provided by Vandemark & Lynch, Inc.**

GEO-TECHNOLOGY ASSOCIATES, INC.
18 Boulden Circle, Suite 36
New Castle, DE 19720
LOG OF AUGER PROBE NO. HA-1
Sheet 1 of 1

CANNOT BE USED FOR BIDDING

Revisions: | Date

CONSULTANTS:

STRUCTURAL
STEINLE CONSTRUCTION ENGINEERS
A DIVISION OF VANDEMARK & LYNCH, INC.
SCE
4305 MILLER ROAD
WILMINGTON, DE 19802, 302-764-7635
www.steinleengineers.com

MECHANICAL/ELECTRICAL
PARAGON ENGINEERING CORPORATION
MECHANICAL/ELECTRICAL
708 Philadelphia Pike
Wilmington, DE 19809
ph: 302.762.6010
fax: 302.762.0653

IRRIGATION
Aqua Engineering, Inc.
Innovative Water Solutions
4803 Innovation Drive
Fort Collins, Colorado 80525
Phone (970) 229-9668
FAX (970) 226-3855

GEOTECHNICAL
GEO-TECHNOLOGY ASSOCIATES, INC.
18 Boulden Circle, Suite 36
New Castle, DE 19720
Tel: 302-326-2100

CEMETERY DESIGN
The LA GROUP
Landscape Architecture & Engineering P.C.
People. Purpose. Place.
40 Long Alley
Saratoga Springs
NY 12866
p: 518-587-8100
f: 518-587-0180
www.thelagroup.com

ARCHITECT/ENGINEER:
VANDEMARK & LYNCH, INC.
ENGINEERS – PLANNERS – SURVEYORS
4305 MILLER ROAD
WILMINGTON, DE 19802/(302) 764-7635
WWW.VANDEMARKLYNCH.COM

U.S. DEPARTMENT OF VETERANS AFFAIRS

Drawing Title: BORING LOGS
Approved: Project Director

Project Title: DELAWARE VETERANS MEMORIAL CEMETERY
Location: MILLSBORO, DELAWARE
Date: 5/02/2016 | Checked: SLJ | Drawn: WJJ

Project Number: DE-13-21
Building Number:
Drawing Number: B-103
Dwg 06 of 28

State of Delaware
Division of Facilities Management

VA FORM 08-6231, OCT 1978

BID SET DOCUMENTS SUBMISSION

Plotted By: BILL JOHNSON
Save Date: 4/18/2016 9:43 AM
File Name: P:\Land Projects\24059 Veterans Cemeteries\24059.04 Veterans Cemetery - Millsboro\Plan Production\Construction Plan\24059.04-GEOT-02.dwg

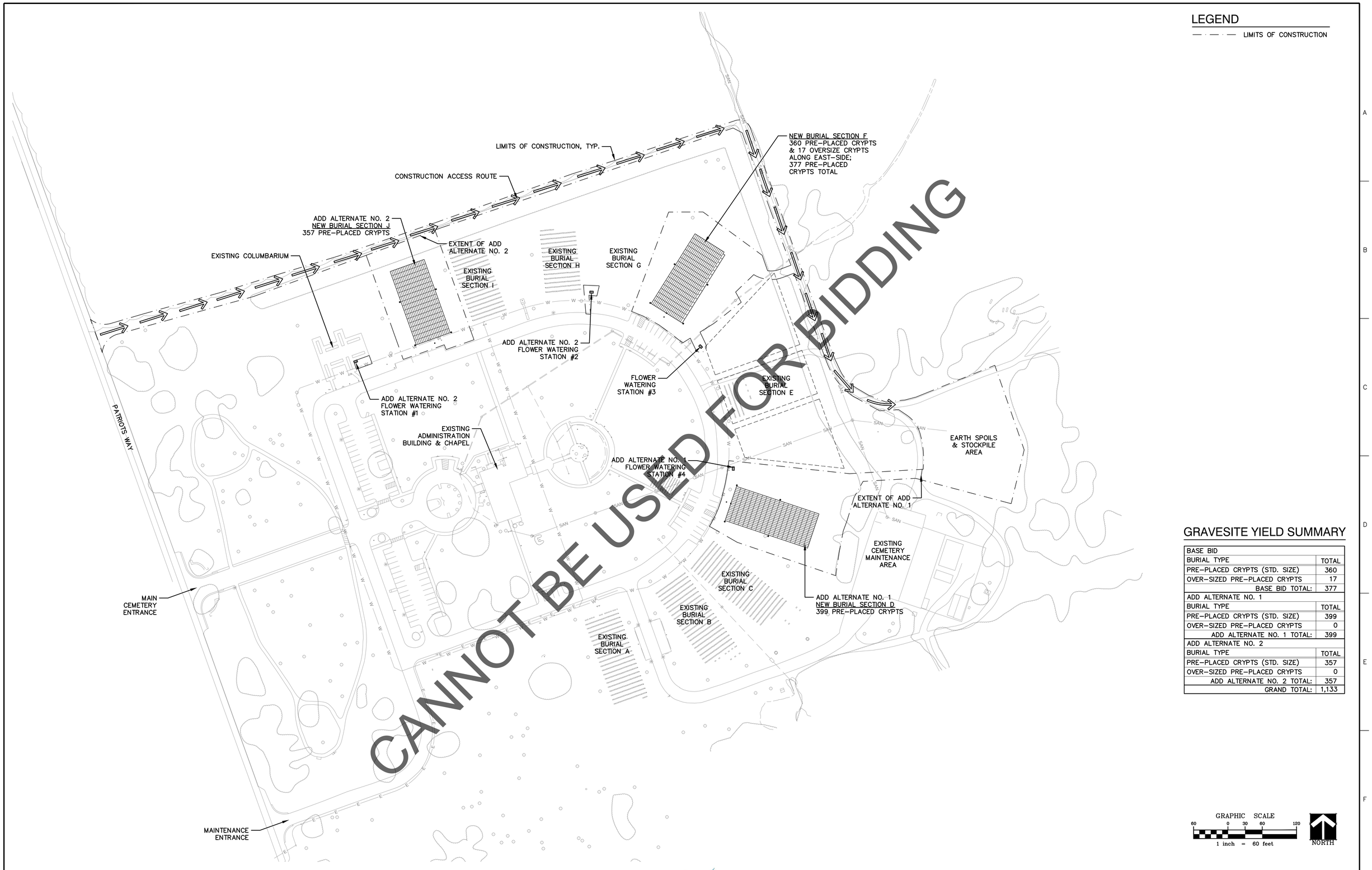

LEGEND

— · — · — LIMITS OF CONSTRUCTION

GRAVESITE YIELD SUMMARY

BASE BID	
BURIAL TYPE	TOTAL
PRE-PLACED CRYPTS (STD. SIZE)	360
OVER-SIZED PRE-PLACED CRYPTS	17
BASE BID TOTAL:	377
ADD ALTERNATE NO. 1	
BURIAL TYPE	TOTAL
PRE-PLACED CRYPTS (STD. SIZE)	399
OVER-SIZED PRE-PLACED CRYPTS	0
ADD ALTERNATE NO. 1 TOTAL:	399
ADD ALTERNATE NO. 2	
BURIAL TYPE	TOTAL
PRE-PLACED CRYPTS (STD. SIZE)	357
OVER-SIZED PRE-PLACED CRYPTS	0
ADD ALTERNATE NO. 2 TOTAL:	357
GRAND TOTAL:	1,133

GRAPHIC SCALE
60 0 30 60 120
1 inch = 60 feet

NORTH

Revisions: Date

CONSULTANTS:

STRUCTURAL
STEINLE CONSTRUCTION ENGINEERS
A DIVISION OF VANDEMARK & LYNCH, INC.
SCE
4305 MILLER ROAD
WILMINGTON, DE 19802, 302-764-7635
www.steinleengineers.com

MECHANICAL/ELECTRICAL
PEC PARAGON ENGINEERING CORPORATION
MECHANICAL/ELECTRICAL
708 Philadelphia Pike
Wilmington, DE 19809
ph: 302.762.6010
fax: 302.762.0653

IRRIGATION
Aqua Engineering, Inc.
Innovative Water Solutions
6653 Innovation Drive
Fort Collins, Colorado 80525
Phone (970) 229-9668
FAX (970) 226-3855

GEOTECHNICAL
GTA
GEO-TECHNOLOGY ASSOCIATES, INC.
18 Boulden Circle, Suite 36
New Castle, DE 19720
Tel: 302-326-2100

CEMETERY DESIGN
The LA GROUP
Landscape Architecture & Engineering P.C.
People. Purpose. Place.
40 Long Alley
Saratoga Springs
NY 12866
p 518-587-8100
f 518-587-0180
www.thelagroup.com

ARCHITECT/ENGINEER:

SURVEYING
VANDEMARK & LYNCH, INC.
ENGINEERS – PLANNERS – SURVEYORS
4305 MILLER ROAD
WILMINGTON, DE 19802/(302) 764-7635
WWW.VANDEMARKLYNCH.COM

STEPHEN M. SCHAFER
No. 9614
REGISTERED
PROFESSIONAL ENGINEER
DELAWARE

U.S. DEPARTMENT OF VETERANS AFFAIRS

Drawing Title
OVERALL SITE DEVELOPMENT PLAN

Approved: Project Director

Project Title
DELAWARE VETERANS MEMORIAL CEMETERY

Location
MILLSBORO, DELAWARE

Date 05/02/2016 | Checked DLM | Drawn JEB

Project Number DE-13-21

Building Number

Drawing Number C-100

Dwg 07 of 28

State of Delaware
Division of Facilities Management

VA FORM 08-6231, OCT 1978

BID SET DOCUMENTS

Printed By: DARRELL MEYN
Save Date: 4/29/2016 10:13 AM
File Name: G:\PQ-PROJECTS\DE13_Delaware_Veterans_Cemetery_Millsboro\01SCHAFER\C-100_OVERALL.dwg

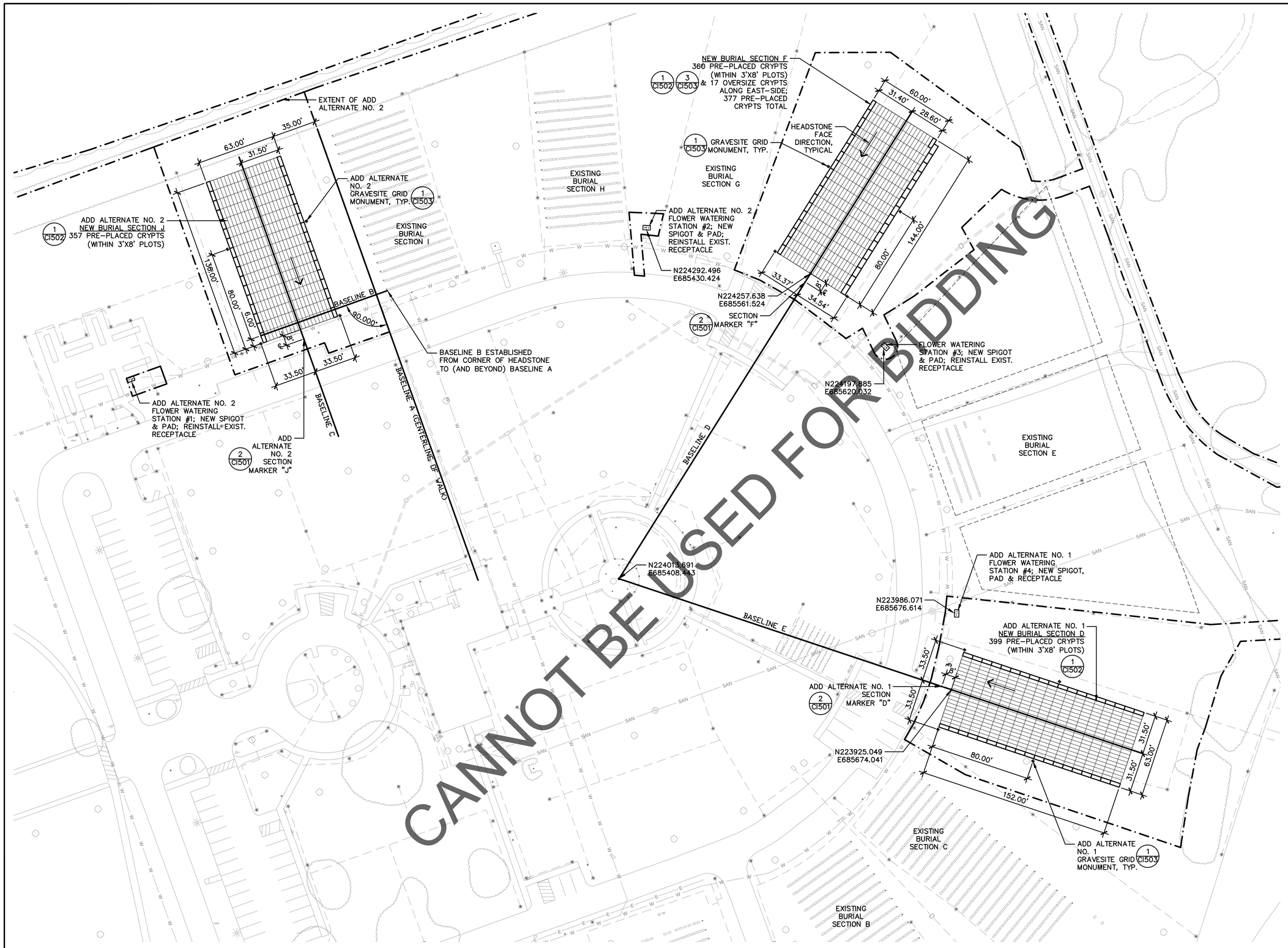

LEGEND

- LIMITS OF CONSTRUCTION
- HEADSTONE DIRECTION
- INTERIOR PRE-PLACED CRYPT, TYP.
- PERIMETER PRE-PLACED CRYPT, TYP.
- OVERSIZE PRE-PLACED CRYPT, TYP.
- GRAVESITE GRID MONUMENT, TYP.

GRAVESITE YIELD SUMMARY

BASE BID	
BURIAL TYPE	TOTAL
PRE-PLACED CRYPTS (STD. SIZE)	360
OVER-SIZED PRE-PLACED CRYPTS	17
BASE BID TOTAL:	377
ADD ALTERNATE NO. 1	
BURIAL TYPE	TOTAL
PRE-PLACED CRYPTS (STD. SIZE)	399
OVER-SIZED PRE-PLACED CRYPTS	0
ADD ALTERNATE NO. 1 TOTAL:	399
ADD ALTERNATE NO. 2	
BURIAL TYPE	TOTAL
PRE-PLACED CRYPTS (STD. SIZE)	357
OVER-SIZED PRE-PLACED CRYPTS	0
ADD ALTERNATE NO. 2 TOTAL:	357
GRAND TOTAL:	1,133

GRAPHIC SCALE 30 0 15 30 60
1 inch = 30 feet

NORTH

Revisions: Date

CONSULTANTS:

STRUCTURAL: STEINLE CONSTRUCTION ENGINEERS, A DIVISION OF VANDEMARK & LYNCH, INC. SCE, 4305 MILLER ROAD, WILMINGTON, DE 19802, 302-764-7635, www.steinleengineers.com

MECHANICAL/ELECTRICAL: PARAGON ENGINEERING CORPORATION, MECHANICAL/ELECTRICAL, 708 Philadelphia Pike, Wilmington, DE 19809, ph: 302.762.6010, fax: 302.762.0653

IRRIGATION: Aqua Engineering, Inc., Innovative Water Solutions, 4803 Innovation Drive, Fort Collins, Colorado 80525, Phone (970) 229-9668, FAX (970) 229-3855

GEOTECHNICAL: GEO-TECHNOLOGY ASSOCIATES, INC., 18 Boulden Circle, Suite 36, New Castle, DE 19720, Tel: 302-326-2100

CEMETERY DESIGN: The LA GROUP, Landscape Architecture & Engineering P.C., People. Purpose. Place., 40 Long Alley, Saratoga Springs, NY 12866, p 518-587-8100, f 518-587-0380, www.thelagroup.com

ARCHITECT/ENGINEER:

SURVEYING: VANDEMARK & LYNCH, INC., ENGINEERS – PLANNERS – SURVEYORS, 4305 MILLER ROAD, WILMINGTON, DE 19802/(302) 764-7635, WWW.VANDEMARKLYNCH.COM

STEPHEN D. LOVE, REGISTERED PROFESSIONAL ENGINEER, DELAWARE

U.S. DEPARTMENT OF VETERANS AFFAIRS

Drawing Title: GRAVESITE & SITE AMENITY LAYOUT PLAN

Approved: Project Director

Project Title: DELAWARE VETERANS MEMORIAL CEMETERY

Location: MILLSBORO, DELAWARE

Date: 05/02/2016 | Checked: DLM | Drawn: JEB

Project Number: DE-13-21

Building Number:

Drawing Number: C-131

Dwg 08 of 28

State of Delaware

Division of Facilities Management

VA FORM 08-6231, OCT 1978

BID SET DOCUMENTS

Printed By: DARRELL MEYN
Save Date: 4/20/2016 8:41 AM
File Name: G:\Projects\DE\DE13_Delaware_Veterans_Cemetery_Millsboro\2015\SCD\AC-131_LAYOUT.dwg

LEGEND

- LIMITS OF CONSTRUCTION
- INTERIOR PRE-PLACED CRYPT, TYP.
- PERIMETER PRE-PLACED CRYPT, TYP.
- OVERSIZE PRE-PLACED CRYPT, TYP.

NOTES:

1. SEE SHEET C-131 FOR GRAVESITE LAYOUT INFORMATION.

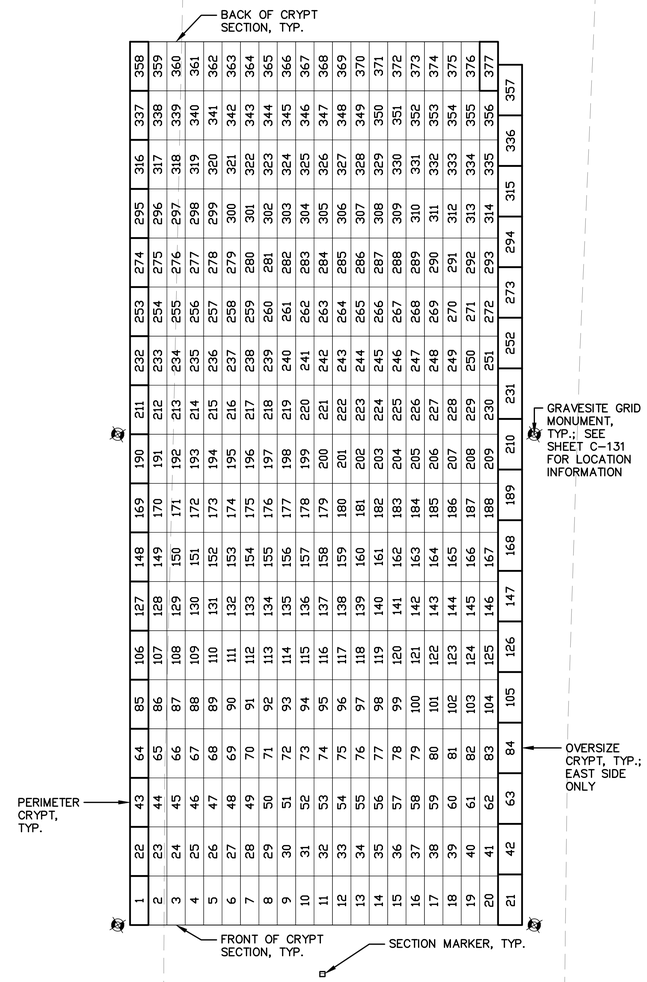

SECTION F
(DOUBLE-DEPTH LAWN CRYPTS & OVERSIZE CRYPTS)

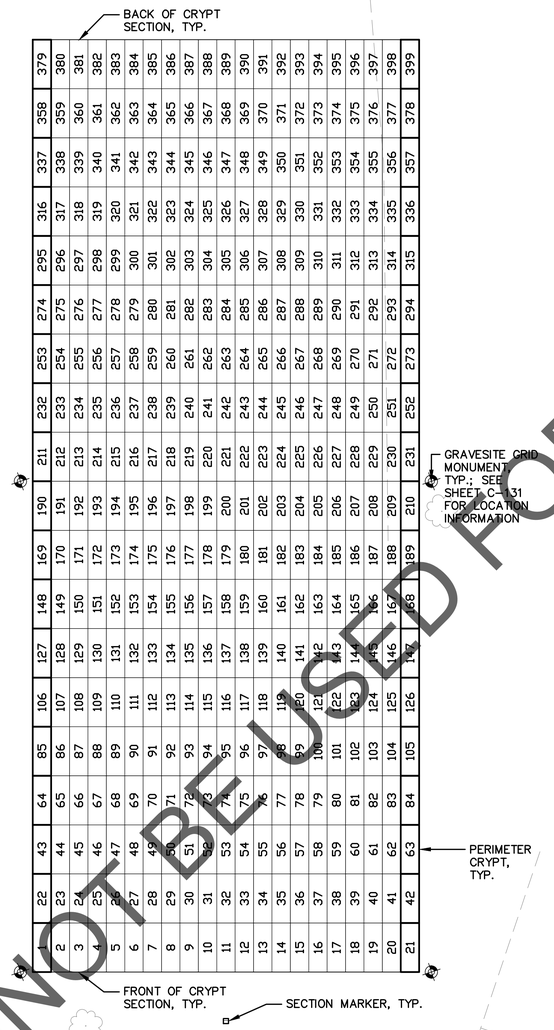

BURIAL SECTION D
(DOUBLE-DEPTH LAWN CRYPTS)

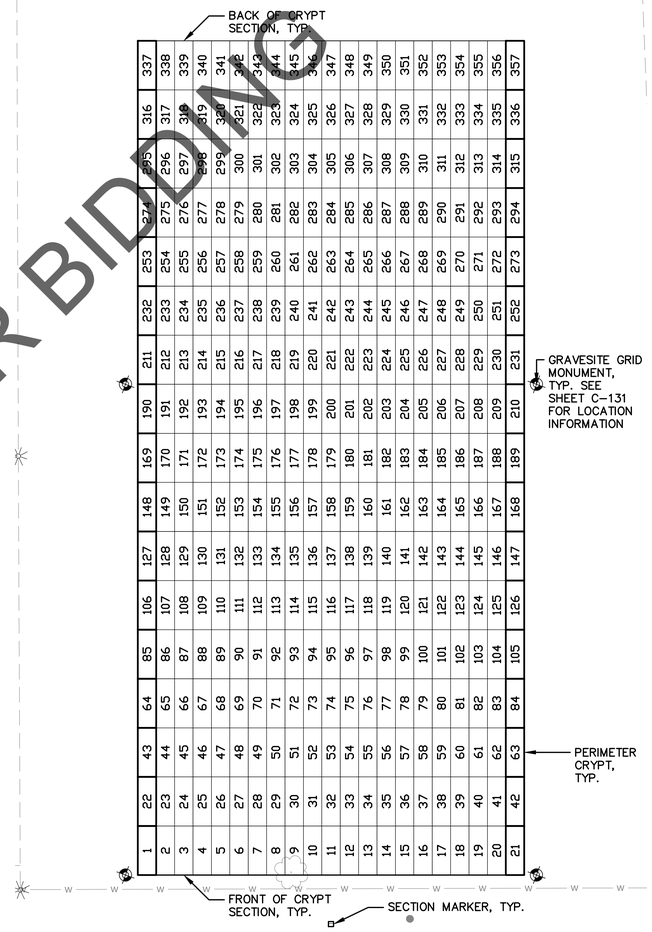

BURIAL SECTION J
(DOUBLE-DEPTH LAWN CRYPTS)

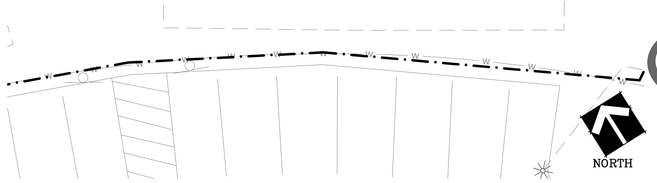

1 BURIAL SECTION F (BASE BID)
Scale: 1"=10'

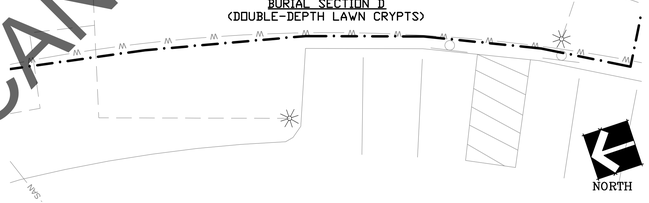

2 BURIAL SECTION D (ADD ALTERNATE NO. 1)
Scale: 1"=10'

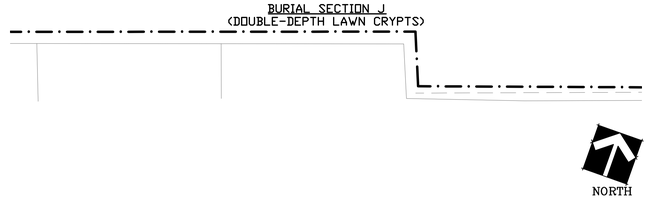

3 BURIAL SECTION J (ADD ALTERNATE NO. 2)
Scale: 1"=10'

CANNOT BE USED FOR BIDDING

Revisions: Date

CONSULTANTS:

STRUCTURAL
STEINLE CONSTRUCTION ENGINEERS
A DIVISION OF VANDEMARK & LYNCH, INC.
SCE
4305 MILLER ROAD
WILMINGTON, DE 19802, 302-764-7635
www.steinleengineers.com

MECHANICAL/ELECTRICAL
PARAGON ENGINEERING CORPORATION
MECHANICAL/ELECTRICAL
708 Philadelphia Pike
Wilmington, DE 19809
ph: 302.762.6010
fax: 302.762.0653

IRRIGATION
Aqua Engineering, Inc.
Innovative Water Solutions
4803 Innovation Drive
Fort Collins, Colorado 80525
Phone (970) 229-9668
FAX (970) 226-3855

GEOTECHNICAL
GEO-TECHNOLOGY ASSOCIATES, INC.
18 Boulden Circle, Suite 36
New Castle, DE 19720
Tel: 302-326-2100

CEMETERY DESIGN
The LA GROUP
Landscape Architecture & Engineering P.C.
People. Purpose. Place.
40 Long Alley
Saratoga Springs
NY 12866
p 518-587-8100
f 518-587-0180
www.thelagroup.com

ARCHITECT/ENGINEER:

SURVEYING
VANDEMARK & LYNCH, INC.
ENGINEERS – PLANNERS – SURVEYORS
4305 MILLER ROAD
WILMINGTON, DE 19802/(302) 764-7635
WWW.VANDEMARKLYNCH.COM

U.S. DEPARTMENT OF VETERANS AFFAIRS

Drawing Title: CRYPT NUMBERING PLAN

Approved: Project Director

Project Title: DELAWARE VETERANS MEMORIAL CEMETERY

Location: MILLSBORO, DELAWARE

Date: 05/02/2016 | Checked: DLM | Drawn: JDS

Project Number: DE-13-21

Building Number

Drawing Number: C-402

Dwg 09 of 28

State of Delaware
Division of Facilities Management

VA FORM 08-6231, OCT 1978

BID SET DOCUMENTS

Printed by: DAVIDMILL1 METAL
Save Date: 4/14/2016 3:26 PM
File Name: G:\PROJECTS\DE\MILL_Delaware_Veterans_Cemetery_MillsboroDE\0100\DCA\DC-402_CRYPT_NUMBERING.dwg

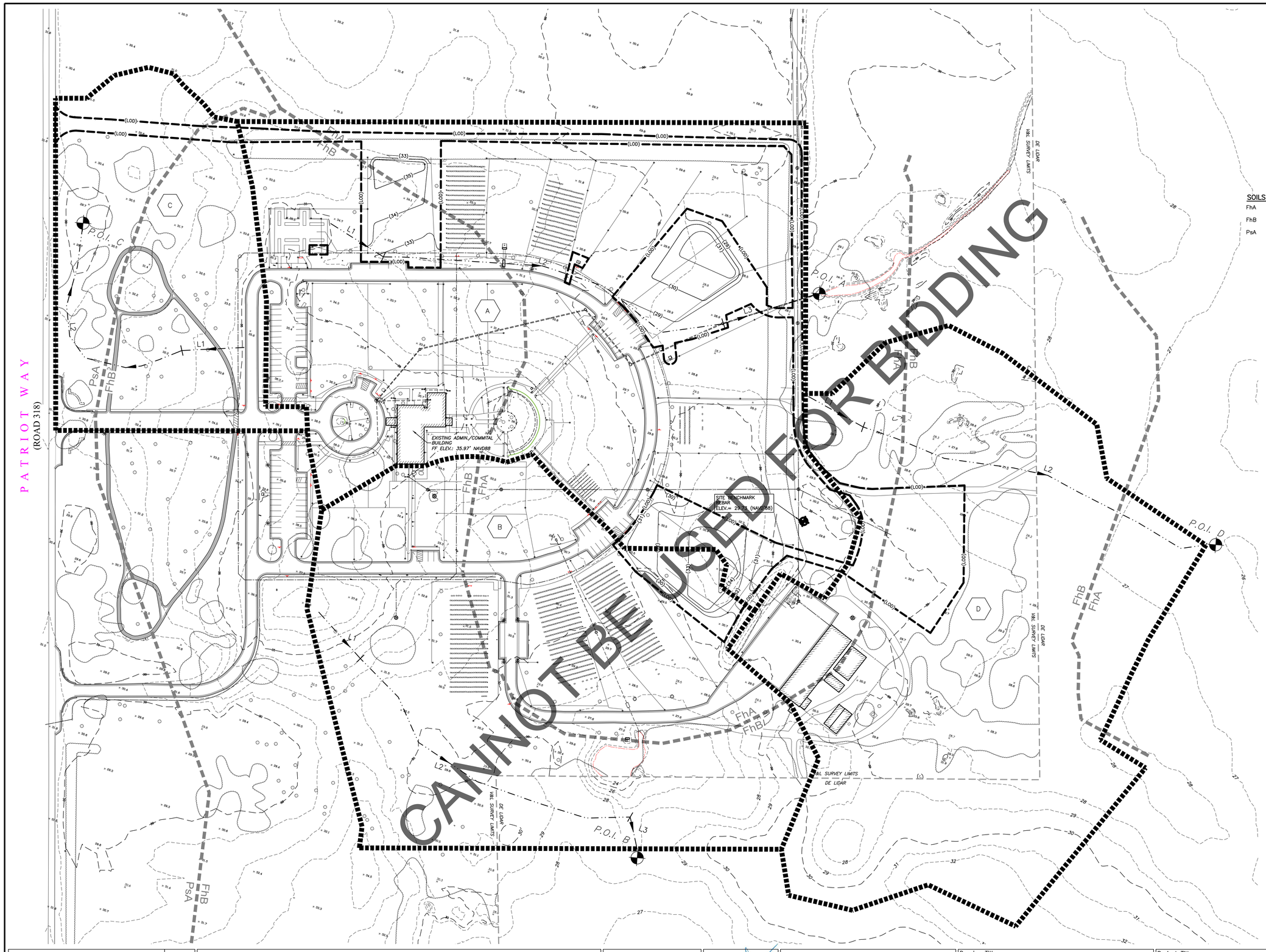

AERIAL TOPOGRAPHY LEGEND

2 LEG SIGN	INTERMEDIATE CONTOUR DEP.
BRIDGE	INTERMEDIATE CONTOUR DEP. DASHED
BUILDING	LIGHT POLE
CANOPY	MISCELLANEOUS
CONCRETE	MISCELLANEOUS SYMBOL
CONCRETE DITCH	PAINT STRIPE
CONTROL POINT	PARKING PAINT STRIPE
CULTIVATED FIELD	PAVED PARKING
CURB	PAVED ROAD
DRAINAGE	POST
ELECTRIC BOX	RETAINING WALL
FENCE	RIP-RAP
FLAGPOLE	SCAR LINE
GUTTER	SHEET EDGE
HEADWALL	SHEET GRID
HEDGELINE	SHEET GRID EDGE
INDEX CONTOUR	SINGLE TREE
INDEX CONTOUR DASHED	SMALL SIGN
INDEX CONTOUR DEP.	SPOT ELEVATION
INDEX CONTOUR DEP. DASHED	TREELINE
INLET	UNPAVED
INTERMEDIATE CONTOUR	VALVE
INTERMEDIATE CONTOUR DASHED	WALL

SOILS LEGEND

FhA	– FORT MOTT–HENLOPEN COMPLEX, 0 TO 2% SLOPES	TYPE 'A'
FhB	– FORT MOTT–HENLOPEN COMPLEX, 2 TO 5% SLOPES	TYPE 'A'
PsA	– PEPPERBOX–ROSEDALE COMPLEX, 0 TO 2% SLOPES:	TYPE 'A/C'

STORMWATER LEGEND

- DRAINAGE BOUNDARY
- SOILS BOUNDARY (ImB)
- SURVEY/LIDAR BOUNDARY (V&L SURVEY LIMITS / DE LIDAR)
- FLOW PATH
- P.O.I POINT OF INTEREST

DRAINAGE AREAS:

A	AREA = 12.60 AC CN = 47 Tc = 21.4 MIN.	L1: 100' SHEET @ 0.01 (GRASS–SHORT) L2: 580' SCF @ 0.006 (GRASS) L3: 150' CF @ 0.005 (PIPE)	
B	AREA = 9.05 AC CN = 44 Tc = 12.8 MIN.	L1: 100' SHEET @ 0.05 (GRASS–SHORT) L2: 535' SCF @ 0.01 (GRASSED) L3: 55' CF @ 0.005 (STREAM)	
C	AREA = 4.10 AC CN = 57 Tc = 13.9 MIN.	L1: 100' SHEET @ 0.022 (GRASS–SHORT) L2: 390' SCF @ 0.008 (GRASSED)	
D	AREA = 10.30 AC CN = 36 Tc = 55.6 MIN.	L1: 100' SHEET @ 0.008 (WOODS) L2: 592' SCF @ 0.006 (WOODS)	

NOTE: THIS PLAN SHOWS THE PRE–DEVELOPED AND POST–DEVELOPED SITE CONDITIONS. THE POST–DEVELOPED CONDITION WILL NOT CHANGE THE PRE–DEVELOPED DRAINAGE AREAS, DRAINAGE PATTERNS, COVER TYPES, TIME OF CONCENTRATION, OR THEREFORE, THE STORMWATER RUNOFF RATES OR VOLUMES.

PROJECT NAME: DELAWARE VETERANS MEMORIAL CEMETERY – MILLSBORO.

PLAN SET: SEDIMENT AND STORMWATER MANAGEMENT PLANS

PROJECT LOCATION: 26669 PATRIOTS WAY, MILLSBORO, DE 19966 DAGSBORO HUNDRED, SUSSEX COUNTY, DELAWARE

WATERSHED: COWBRIDGE MILLSBORO POND WATERSHED

TAX PARCEL No. 133–7.00–8.00

GRAPHIC SCALE
60 0 30 60 120
1 inch = 60 feet

NORTH

Revisions:	Date

CONSULTANTS:

STRUCTURAL
STEINLE CONSTRUCTION ENGINEERS
A DIVISION OF VANDEMARK & LYNCH, INC.
SCE
4305 MILLER ROAD
WILMINGTON, DE 19802, 302-764-7635
www.steinleengineers.com

MECHANICAL/ELECTRICAL
PARAGON ENGINEERING CORPORATION
MECHANICAL/ELECTRICAL
708 Philadelphia Pike
Wilmington, DE 19809
ph: 302.762.6010
fax: 302.762.0653

IRRIGATION
Aqua Engineering, Inc.
Innovative Water Solutions
4803 Innovation Drive
Fort Collins, Colorado 80525
Phone (970) 229-9568
FAX (970) 226-3855

GEOTECHNICAL
GTA
GEO-TECHNOLOGY ASSOCIATES, INC.
18 Boulden Circle, Suite 36
New Castle, DE 19720
Tel: 302-326-2100

CEMETERY DESIGN
The LA GROUP
Landscape Architecture & Engineering P.C.
Purple. Purpose. Plan.
40 Long Alley
Saratoga Springs
NY 12866
518-587-8000
518-587-0180
www.thelagroup.com

ARCHITECT/ENGINEER:
V&L
VANDEMARK & LYNCH, INC.
ENGINEERS – PLANNERS – SURVEYORS
4305 MILLER ROAD
WILMINGTON, DE 19802/(302) 764–7635
WWW.VANDEMARKLYNCH.COM

STEPHEN L. JONES
No. 9586
REGISTERED
PROFESSIONAL ENGINEER
DELAWARE
Retired 5/31/16

U.S. DEPARTMENT OF VETERANS AFFAIRS

Drawing Title
PRE–DEVELOPED DRAINAGE AREA PLAN

Approved: Project Director

Project Title
DELAWARE VETERANS MEMORIAL CEMETERY

Location
MILLSBORO, DELAWARE

Date 5/02/2016 | Checked SLJ | Drawn JH

Project Number DE–13–21

Building Number

Drawing Number
CG100
Dwg 10 of 28

State of Delaware
Division of Facilities Management

VA FORM 08–6231, OCT 1978

BID SET DOCUMENTS SUBMISSION

Plotted By: BILL JOHNSON
Date/Time: 5/4/2016 10:00 AM
File Name: P:\Land Projects\24005 Veterans Ceremonial\24005-04 Veterans Cemetery - Millsboro\Plan Production\Construction Plan\24005-04-SWM-02.dwg

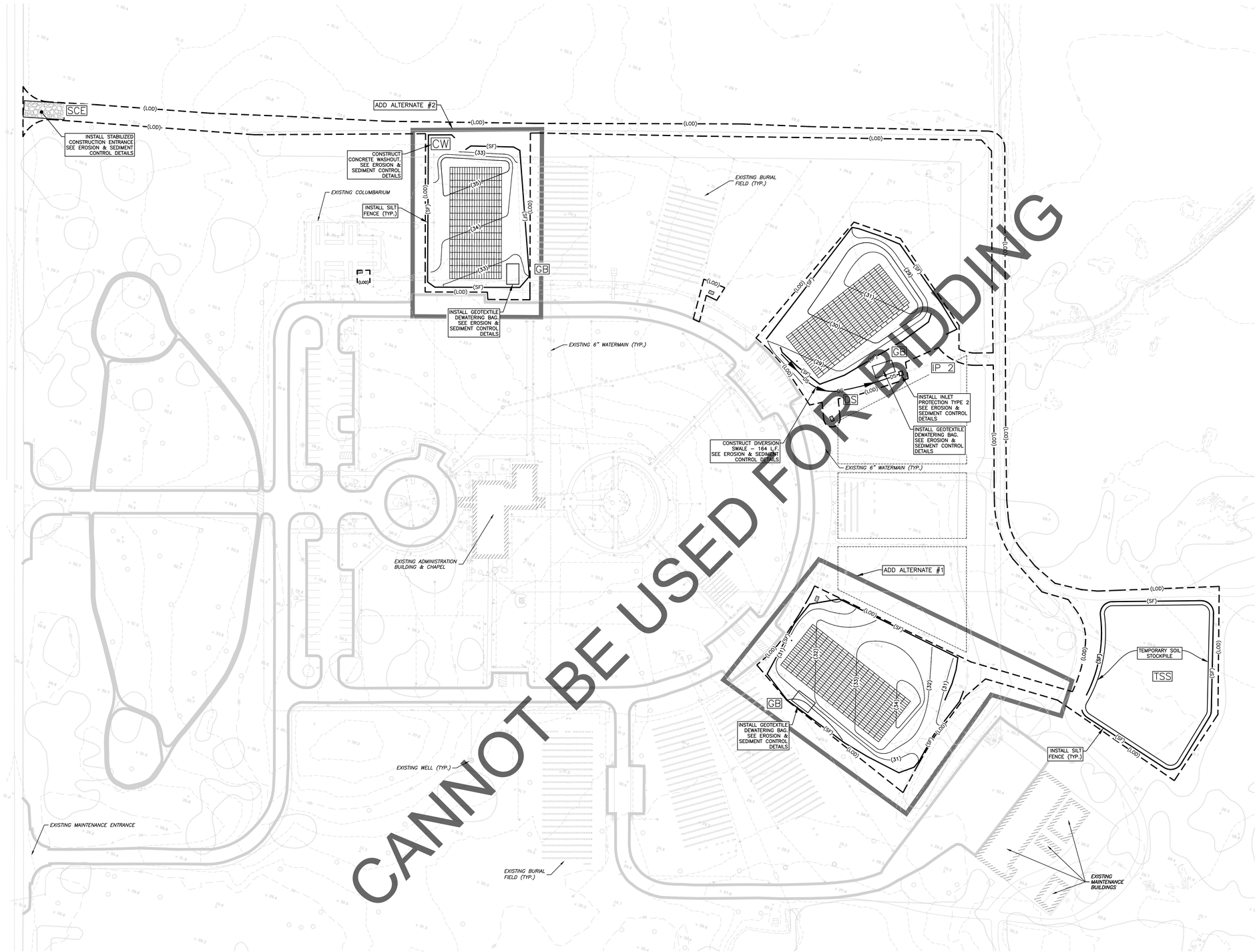

PROJECT NAME:	DELAWARE VETERANS MEMORIAL CEMETERY – MILLSBORO.
PLAN SET:	SEDIMENT AND STORMWATER MANAGEMENT PLANS
PROJECT LOCATION:	26669 PATRIOTS WAY, MILLSBORO, DE 19966 DAGSBORO HUNDRED, SUSSEX COUNTY, DELAWARE
WATERSHED:	COWBRIDGE MILLSBORO POND WATERSHED
TAX PARCEL No.	133–7.00–8.00

NOTE: THIS PLAN SHOWS THE PRE–CONSTRUCTION SITE EROSION AND SEDIMENT CONTROLS WHICH WILL ALSO SERVE AS THE CONSTRUCTION SITE EROSION AND SEDIMENT CONTROLS. PRE–CONSTRUCTION CONTROLS SHALL BE INSTALLED PRIOR TO BEGINNING CONSTRUCTION AND REMAIN IN PLACE THROUGHOUT CONSTRUCTION.

PROJECT DISTURBANCE AREA = 3.65 ACRES

EROSION & SEDIMENT CONTROL LEGEND

DS	DIVERSION SWALE
GB	GEOTEXTILE DEWATERING BAG
IP 2	INLET PROTECTION TYPE 2
SCE	STABILIZED CONSTRUCTION ENTRANCE
TSS	TEMPORARY SOIL STOCKPILE
— LOD —	LIMIT OF DISTURBANCE
— SF —	SILT FENCE
CW	CONCRETE WASHOUT

GRAPHIC SCALE

50 0 25 50 100

1 inch = 50 feet

NORTH

Revisions:	Date

CONSULTANTS:

STRUCTURAL
STEINLE CONSTRUCTION ENGINEERS
A DIVISION OF VANDEMARK & LYNCH, INC.
SCE
4305 MILLER ROAD
WILMINGTON, DE 19802, 302-764-7635
www.steinleengineers.com

MECHANICAL/ELECTRICAL
PARAGON ENGINEERING CORPORATION
MECHANICAL/ELECTRICAL
708 Philadelphia Pike
Wilmington, DE 19809
ph: 302.762.6010
fax: 302.762.0653

IRRIGATION
Aqua Engineering, Inc.
Innovative Water Solutions
4823 Innovation Drive
Fort Collins, Colorado 80525
Phone (970) 229-9668
FAX (970) 226-3855

GEOTECHNICAL
GTA
GEO-TECHNOLOGY ASSOCIATES, INC.
18 Boulden Circle, Suite 36
New Castle, DE 19720
Tel: 302-326-2100

CEMETERY DESIGN
The LA GROUP
Landscape Architecture & Engineering P.C.
People. Purpose. Place.
40 Long Alley
Saratoga Springs
NY 12866
p: 518-587-8100
f: 518-587-0180
www.thelagroup.com

ARCHITECT/ENGINEER:
VANDEMARK & LYNCH, INC.
ENGINEERS – PLANNERS – SURVEYORS
4305 MILLER ROAD
WILMINGTON, DE 19802/(302) 764–7635
WWW.VANDEMARKLYNCH.COM

STEPHEN T. LOVE
REGISTERED
No. 9626
DELAWARE
PROFESSIONAL ENGINEER
Stephen T. Love

U.S. DEPARTMENT OF VETERANS AFFAIRS

Drawing Title
PRE–CONSTRUCTION SITE STORMWATER MANAGEMENT PLAN

Approved: Project Director

Project Title
DELAWARE VETERANS MEMORIAL CEMETERY

Location
MILLSBORO, DELAWARE

Date	Checked	Drawn
5/02/2016	SLJ	WJJ

Project Number
DE–13–21

Building Number

Drawing Number
CG110

Dwg 11 of 28

State of Delaware
Division of Facilities Management

VA FORM 08–6231, OCT 1978

BID SET DOCUMENTS SUBMISSION

Plotted By: ELL JOHNSON
Date/Time: 5/2/2016 9:00 AM
File Name: P:\Land Projects\26669 Veterans Cemeteries\26669\04 Veterans Cemetery - Millsboro\Plan Production\Construction Plans\26669-04-SITE-01.dwg

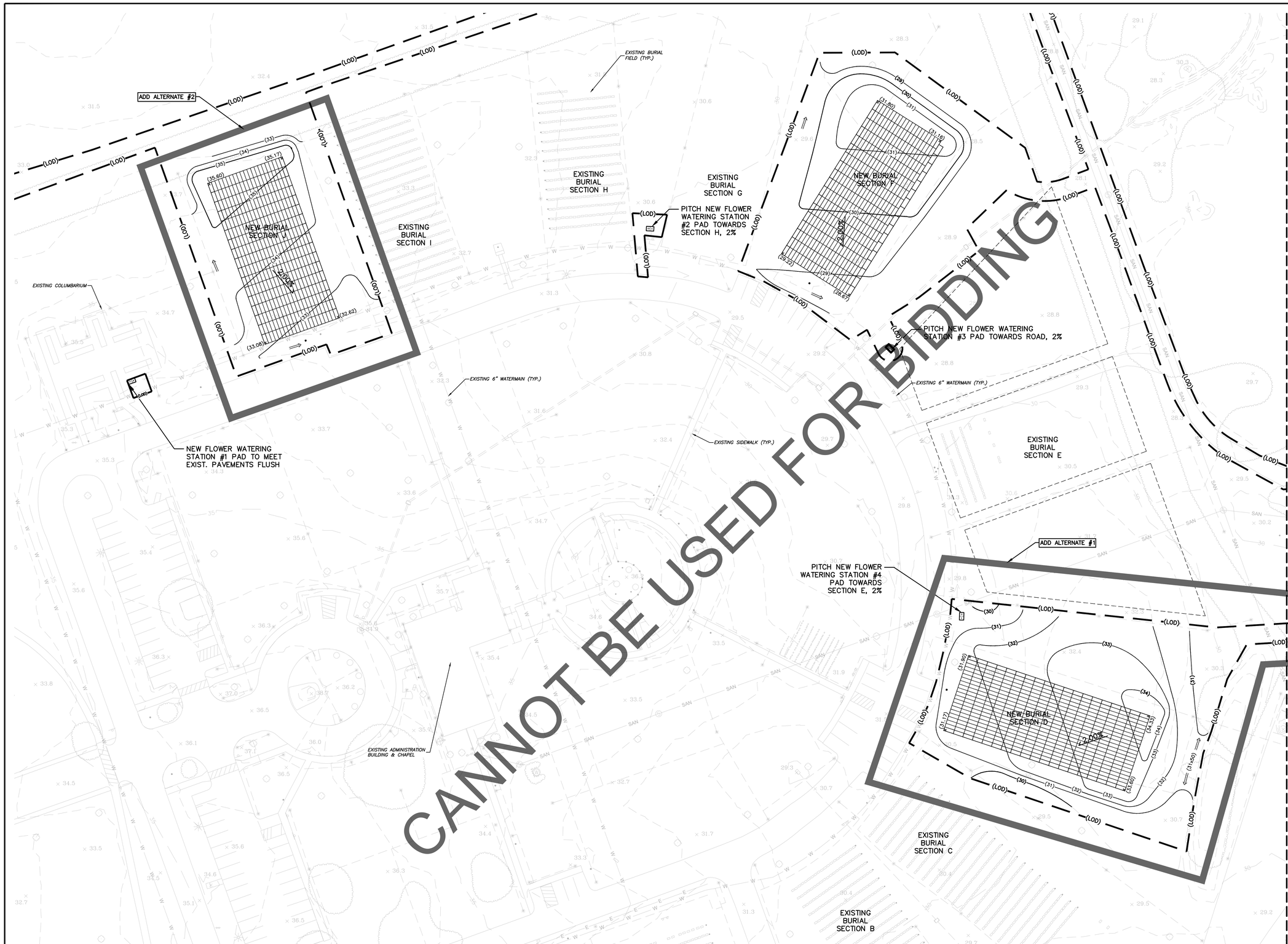

LEGEND

(70)	MAJOR CONTOUR
(69)	MINOR CONTOUR
(LOD)	LIMITS OF CONSTRUCTION
70	EXISTING CONTOUR
HP	HIGH POINT
LP	LOW POINT
2.0%	FINISHED GRADE PITCH
x(30.00)	SPOT ELEVATION

PROJECT NAME: DELAWARE VETERANS MEMORIAL CEMETERY – MILLSBORO.

PLAN SET: SEDIMENT AND STORMWATER MANAGEMENT PLANS

PROJECT LOCATION: 26669 PATRIOTS WAY, MILLSBORO, DE 19966 DAGSBORO HUNDRED, SUSSEX COUNTY, DELAWARE

WATERSHED: COWBRIDGE MILLSBORO POND WATERSHED

TAX PARCEL No. 133-7.00-8.00

GRAPHIC SCALE

30 0 15 30 60

1 inch = 30 feet

NORTH

Revisions:	Date

CONSULTANTS:

STRUCTURAL
STEINLE CONSTRUCTION ENGINEERS
A DIVISION OF VANDEMARK & LYNCH, INC.
SCE
4305 MILLER ROAD
WILMINGTON, DE 19802, 302-764-7635
www.steinleengineers.com

MECHANICAL/ELECTRICAL
PARAGON ENGINEERING CORPORATION
MECHANICAL/ELECTRICAL
708 Philadelphia Pike
Wilmington, DE 19809
ph: 302.762.6010
fax: 302.762.0653

IRRIGATION
Aqua Engineering, Inc.
Innovative Water Solutions
4803 Innovation Drive
Fort Collins, Colorado 80525
Phone (970) 229-9668
FAX (970) 226-3855

GEOTECHNICAL
GTA
GEO-TECHNOLOGY ASSOCIATES, INC.
18 Boulden Circle, Suite 36
New Castle, DE 19720
Tel: 302-326-2100

CEMETERY DESIGN
The LA GROUP
Landscape Architecture & Engineering P.C.
People. Purpose. Place.
40 Long Alley
Saratoga Springs
NY 12866
p: 518-587-8100
f: 518-587-0180
www.thelagroup.com

ARCHITECT/ENGINEER:
VANDEMARK & LYNCH, INC.
ENGINEERS – PLANNERS – SURVEYORS
4305 MILLER ROAD
WILMINGTON, DE 19802/(302) 764-7635
WWW.VANDEMARKLYNCH.COM

STEPHEN L. SMITH
REGISTERED PROFESSIONAL ENGINEER
DELAWARE

U.S. DEPARTMENT OF VETERANS AFFAIRS

Drawing Title: GRADING PLAN (AREA 1)

Approved: Project Director

Project Title: DELAWARE VETERANS MEMORIAL CEMETERY

Location: MILLSBORO, DELAWARE

Date: 5/02/2016 | Checked: SLJ | Drawn: JH, WJJ

Project Number: DE-13-21

Building Number:

Drawing Number: CG121

Dwg 12 of 28

State of Delaware
Division of Facilities Management

VA FORM 08-6231, OCT 1978

BID SET DOCUMENTS SUBMISSION

Plotted By: BILL JOHNSTON
Last Saved: 5/02/2016 10:00 AM
File Name: P:\Land Projects\2009 Veterans Ceremony\2009-04 Veterans Cemetery - Millsboro\Plan Production\Construction Plan\2409-04 LAND GRADE C1-3.dwg

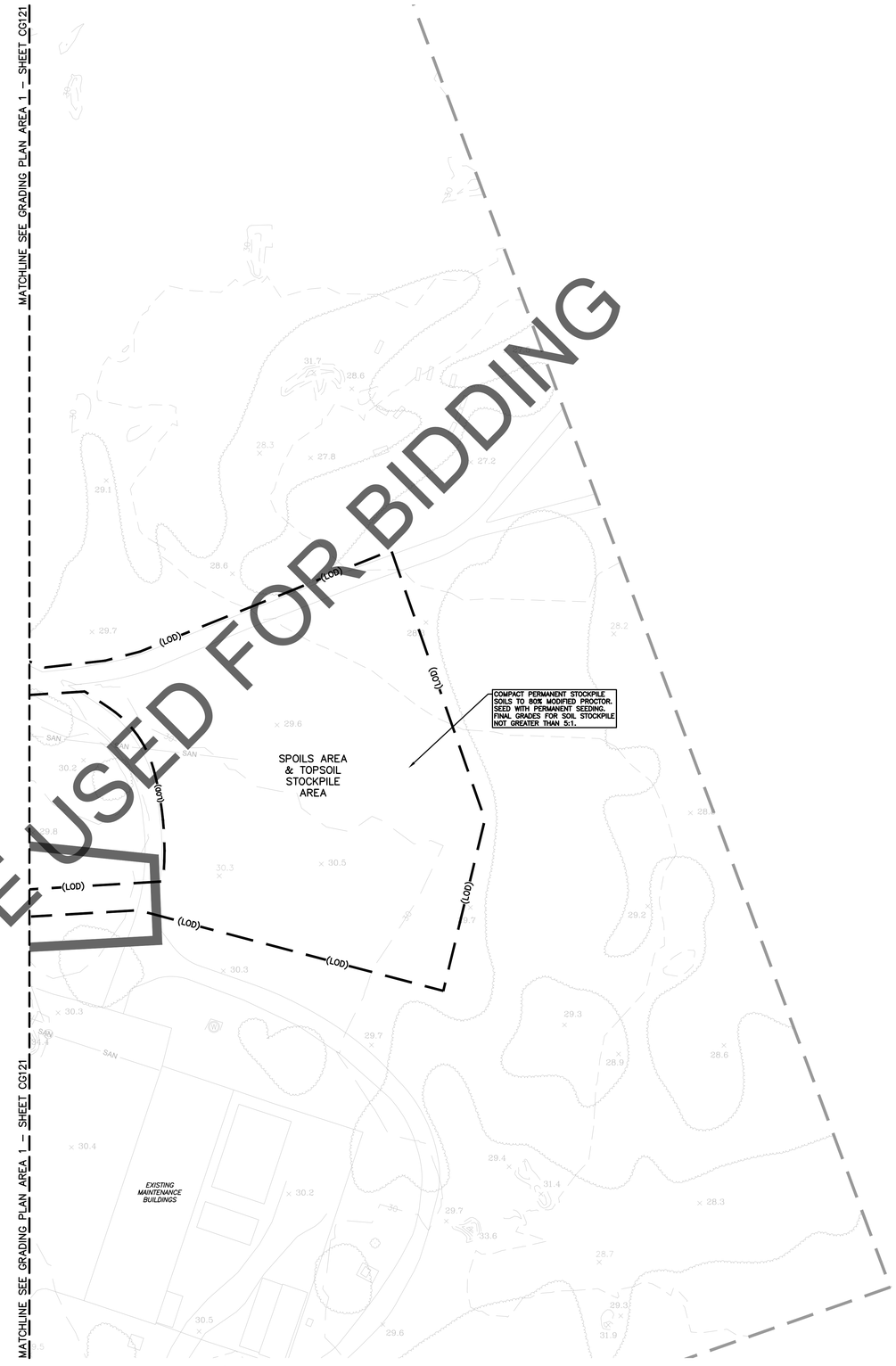

CANNOT BE USED FOR BIDDING

LEGEND

(70)	MAJOR CONTOUR
(69)	MINOR CONTOUR
(LOD)	LIMITS OF CONSTRUCTION
70	EXISTING CONTOUR
HP	HIGH POINT
LP	LOW POINT
2.0%	FINISHED GRADE PITCH
x(30.00)	SPOT ELEVATION

PROJECT NAME: DELAWARE VETERANS MEMORIAL CEMETERY – MILLSBORO.

PLAN SET: SEDIMENT AND STORMWATER MANAGEMENT PLANS

PROJECT LOCATION: 26669 PATRIOTS WAY, MILLSBORO, DE 19966 DAGSBORO HUNDRED, SUSSEX COUNTY, DELAWARE

WATERSHED: COWBRIDGE MILLSBORO POND WATERSHED

TAX PARCEL No. 133–7.00–8.00

GRAPHIC SCALE

30 0 15 30 60

1 inch = 30 feet

NORTH

Revisions:	Date

CONSULTANTS:

STRUCTURAL
STEINLE CONSTRUCTION ENGINEERS
A DIVISION OF VANDEMARK & LYNCH, INC.
SCE
4305 MILLER ROAD
WILMINGTON, DE 19802, 302-764-7635
www.steinleengineers.com

MECHANICAL/ELECTRICAL
PARAGON ENGINEERING CORPORATION
MECHANICAL/ELECTRICAL
708 Philadelphia Pike
Wilmington, DE 19809
ph: 302.762.6010
fax: 302.762.0653

IRRIGATION
Aqua Engineering, Inc.
Innovative Water Solutions
4803 Innovation Drive
Fort Collins, Colorado 80525
Phone (970) 229-9568
FAX (970) 226-3855

GEOTECHNICAL
GTA
GEO-TECHNOLOGY ASSOCIATES, INC.
18 Boulden Circle, Suite 36
New Castle, DE 19720
Tel: 302-326-2100

CEMETERY DESIGN
The LA GROUP
Landscape Architecture & Engineering P.C.
People. Purpose. Place.
40 Long Alley
Saratoga Springs
NY 12866
p 518-587-8000
f 518-587-0180
www.thelagroup.com

ARCHITECT/ENGINEER:
VANDEMARK & LYNCH, INC.
ENGINEERS – PLANNERS – SURVEYORS
4305 MILLER ROAD
WILMINGTON, DE 19802/(302) 764–7635
WWW.VANDEMARKLYNCH.COM

STEPHEN L. JOHNSON REGISTERED PROFESSIONAL ENGINEER DELAWARE

U.S. DEPARTMENT OF VETERANS AFFAIRS

Drawing Title: GRADING PLAN (AREA 2)

Approved: Project Director

Project Title: DELAWARE VETERANS MEMORIAL CEMETERY

Location: MILLSBORO, DELAWARE

Date: 5/02/2016 | Checked: SLJ | Drawn: JH, WJJ

Project Number: DE–13–21

Building Number:

Drawing Number: CG122

Dwg 13 of 28

State of Delaware
Division of Facilities Management

VA FORM 08-6231, OCT 1978

BID SET DOCUMENTS SUBMISSION

Plotted By: BILL JOHNSON
Date/Time: 5/2/2016 10:17:22 AM
File Name: P:\Land Projects\24009 Veterans Cemetery\CG03-04 Veterans Cemetery - Millsboro\Plan Production\Construction Plan\24009-04-LAYO-GRADE-01.dwg

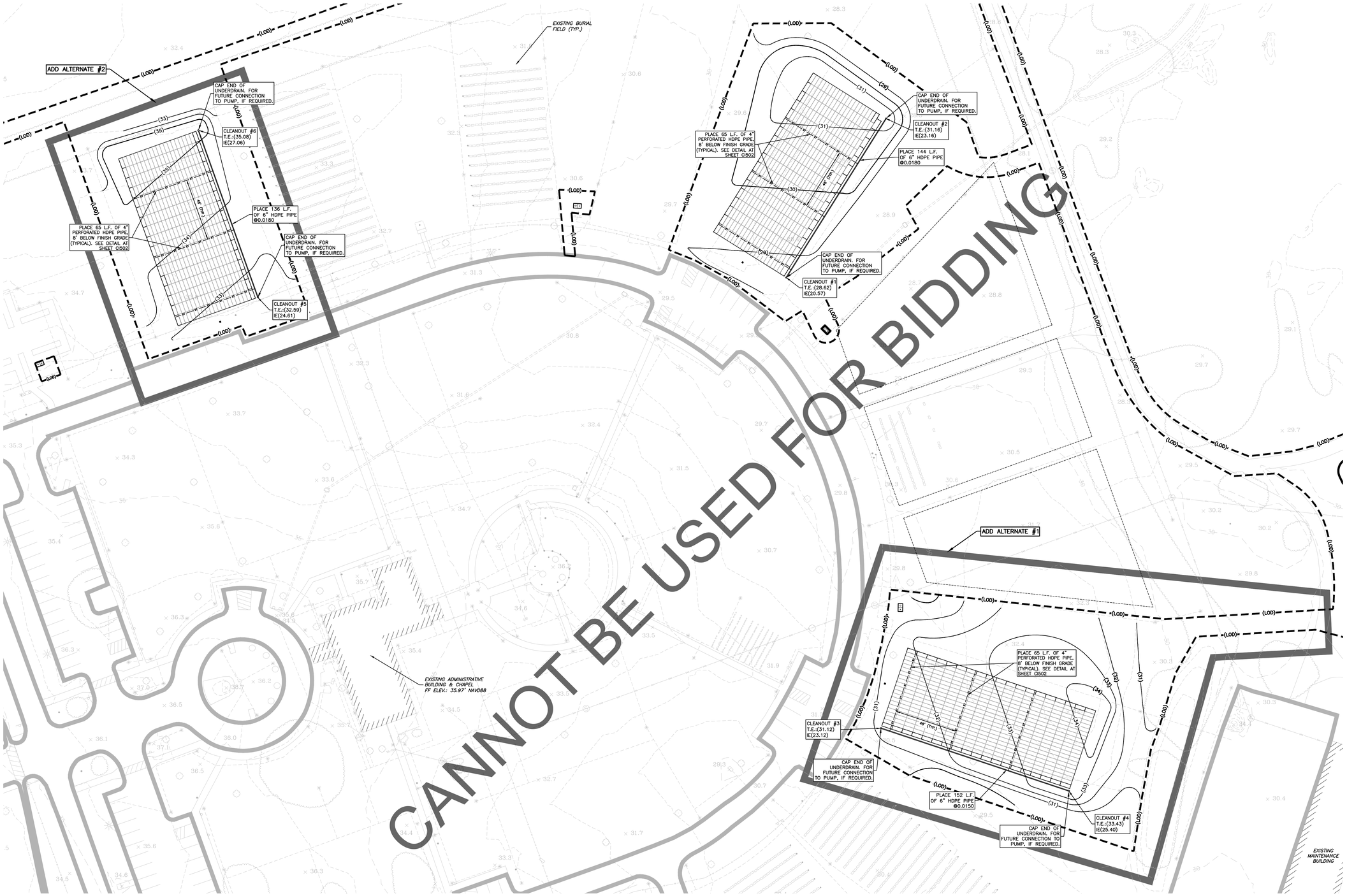

PROJECT NAME: DELAWARE VETERANS MEMORIAL CEMETERY – MILLSBORO.

PLAN SET: SEDIMENT AND STORMWATER MANAGEMENT PLANS

PROJECT LOCATION: 26669 PATRIOTS WAY, MILLSBORO, DE 19966 DAGSBORO HUNDRED, SUSSEX COUNTY, DELAWARE

WATERSHED: COWBRIDGE MILLSBORO POND WATERSHED

TAX PARCEL No. 133-7.00-8.00

GRAPHIC SCALE

30 0 15 30 60

1 inch = 30 feet

NORTH

Revisions:	Date

CONSULTANTS:

STRUCTURAL
STEINLE CONSTRUCTION ENGINEERS
A DIVISION OF VANDEMARK & LYNCH, INC.
SCE
4305 MILLER ROAD
WILMINGTON, DE 19802, 302-764-7635
www.steinleengineers.com

MECHANICAL/ELECTRICAL
PARAGON ENGINEERING CORPORATION
MECHANICAL/ELECTRICAL
708 Philadelphia Pike
Wilmington, DE 19809
ph: 302.762.6010
fax: 302.762.0653

IRRIGATION
Aqua Engineering, Inc.
Innovative Water Solutions
4803 Innovation Drive
Fort Collins, Colorado 80525
Phone (970) 229-9668
FAX (970) 226-3855

GEOTECHNICAL
GTA
GEO-TECHNOLOGY ASSOCIATES, INC.
18 Boulden Circle, Suite 36
New Castle, DE 19720
Tel: 302-326-2100

CEMETERY DESIGN
The LA GROUP
Landscape Architecture & Engineering P.C.
Purify. Purpose. Place.
40 Long Alley
Saratoga Springs
NY 12866
518-587-8200
518-587-0180
www.thelagroup.com

ARCHITECT/ENGINEER:
VANDEMARK & LYNCH, INC.
ENGINEERS – PLANNERS – SURVEYORS
4305 MILLER ROAD
WILMINGTON, DE 19802/(302) 764-7635
WWW.VANDEMARKLYNCH.COM

STEPHEN L. JONES
REGISTERED
No. 9225
DELAWARE
PROFESSIONAL ENGINEER

U.S. DEPARTMENT OF VETERANS AFFAIRS

Drawing Title: DRAINAGE PLAN

Approved: Project Director

Project Title: DELAWARE VETERANS MEMORIAL CEMETERY

Location: MILLSBORO, DELAWARE

Date: 5/02/2016 | Checked: SLJ | Drawn: WJJ

Project Number: DE-13-21

Building Number:

Drawing Number: CG131

Dwg 14 of 28

State of Delaware

Division of Facilities Management

VA FORM 08-6231, OCT 1978

BID SET DOCUMENTS SUBMISSION

Plotted By: BILL JOHNSTON
Date/Time: 5/2/2016 10:00:00 AM
File Name: P:\Land Projects\26669 Veterans Ceremony\40559-04 Veterans Cemetery - Millsboro\Plan Production\Construction Plans\40559-04-CONST-01.dwg

CANNOT BE USED FOR BIDDING

Standard Detail & Specifications
Stabilized Construct. Entrance

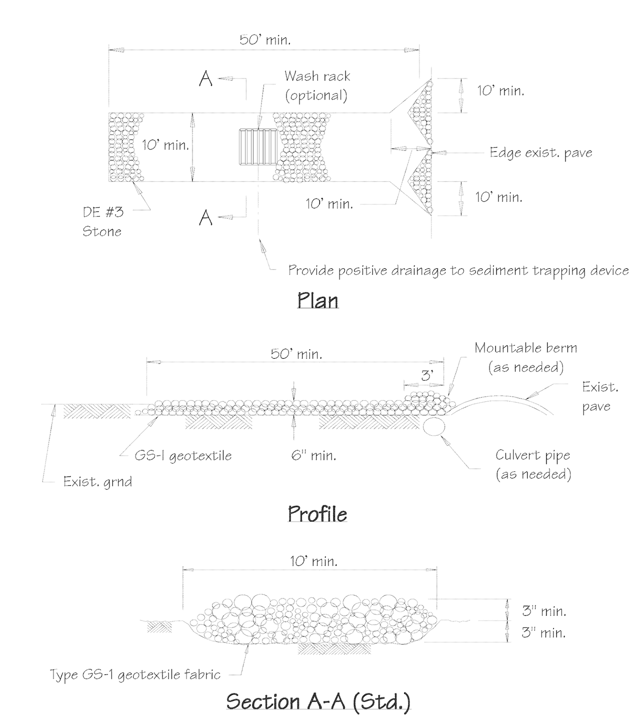

Source:	Symbol:	Detail No.
Adapted from VA ESC Handbook	SCE	DE-ESC-3.4.7 Sheet 1 of 2 Date: 12/03

Standard Detail & Specifications
Stabilized Construct. Entrance

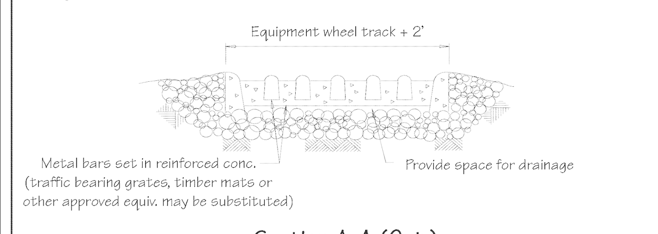

Construction Notes:

1. Stone size - Use DE #3 stone.
2. Length - As required, but not less than 50 feet (except on a single residence lot where a 30 foot minimum length would apply).
3. Thickness - Not less than size (6) inches.
4. Width - Ten (10) foot minimum, but not less than the full width at points where ingress or egress occurs.
5. Geotextile - Type GS-I; placed over the entire area prior to placing of stone.
6. Surface Water - All surface water flowing or diverted toward construction entrances shall be piped across the entrance. If piping is impractical, a mountable berm with 5:1 slopes will be permitted.
7. Maintenance - The entrance shall be maintained in a condition which will prevent tracking or flowing of sediment onto public rights-of-way. This may require periodic top dressing with additional stone as conditions demand and repair and/or cleanout of any measures used to trap sediment. All sediment spilled, dropped, washed or tracked onto public rights-of-way must be removed immediately.
8. Washing - Vehicle wheels shall be cleaned to remove sediment prior to entrance onto public rights-of-way. When washing is required, it shall be done on an area stabilized with stone and which drains into an approved sediment trapping device.
9. Inspection - Periodic inspection and needed maintenance shall be provided after each rain.

Source:	Symbol:	Detail No.
Adapted from VA ESC Handbook	SCE	DE-ESC-3.4.7 Sheet 2 of 2 Date: 12/03

Standard Detail & Specifications
Silt Fence

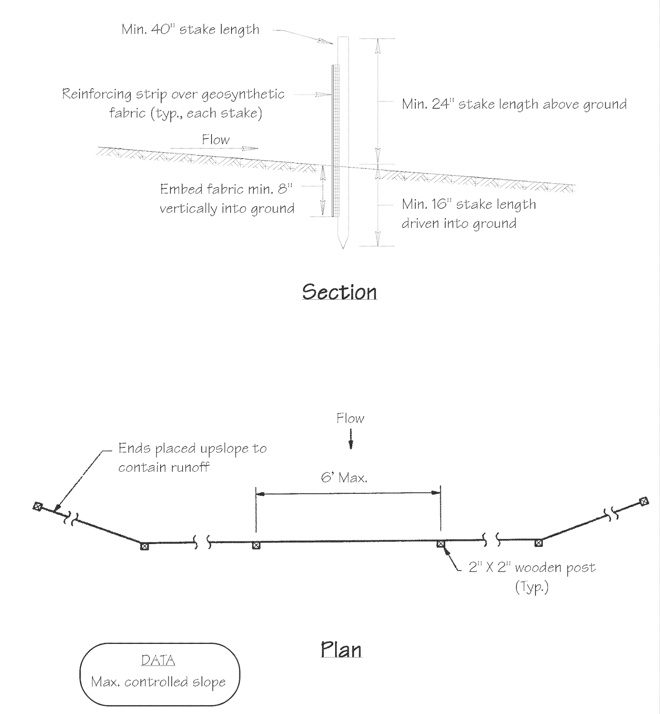

Source:	Symbol:	Detail No.
Adapted form MD Stds. & Specs. for ESC	SF	DE-ESC-3.1.2.1 Sheet 1 of 2 Date: 6/05

Standard Detail & Specifications
Silt Fence

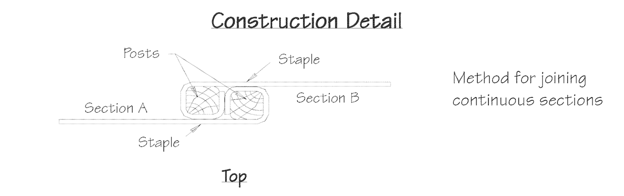

Construction Notes:

1. Geosynthetic fabric to be fastened securely to fence posts with wire ties or staples.
2. When two sections of filter cloth adjoin each other they shall be overlapped by six inches and folded.
3. Maintenance shall be performed as needed and material removed when "bulges" develop in the silt fence.

Materials:

1. Stakes: Steel (either T or U) or 2" x 2" hardwood
2. Geosynthetic Fabric: Type GD-I
3. Reinforcing strip: Wooden lath, plastic strip or other approved equivalent
4. Prefabricated Unit: Geofab, Envirofence, or approved equivalent

Source:	Symbol:	Detail No.
Adapted from MD Stds. & Specs. for ESC	SF	DE-ESC-3.1.2.1 Sheet 2 of 2 Date: 6/05

Standard Detail & Specifications
Inlet Protection - Type 2

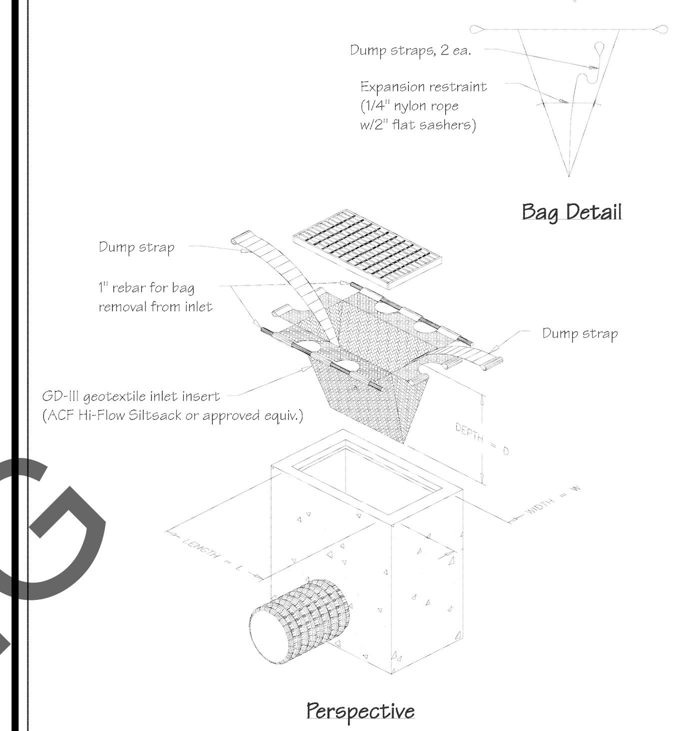

Source:	Symbol:	Detail No.
Adapted from ACF Products, Inc.	IP-2	DE-ESC-3.1.5.2 Sheet 1 of 2 Date: 12/03

Standard Detail & Specifications
Inlet Protection - Type 2

Notes:

1. This practice shall only be used in situations in which Inlet Protection - Type 1 cannot be used due to site constraints. These include, but are not limited to partially completed parking areas, streets, roads, etc.
2. It may be necessary to transition from Type 1 to Type 2 Inlet Protection as construction proceeds.
3. For areas where there is a concern for oil run-off or spills, insert shall meet one of the above specifications with an oil-absorbant pillow or shall be made completely from an oil-absorbant material with a woven pillow.

Materials:

The geotextile inlet insert shall meet or exceed the specifications of Type GD-III geotextile in accordance with Appendix A-3 of the Delaware Erosion & Sediment Control Handbook.

Source:	Symbol:	Detail No.
Adapted from ACF Products, Inc.	IP-2	DE-ESC-3.1.5.2 Sheet 2 of 2 Date: 12/03

Standard Detail & Specifications
Stone Check Dam

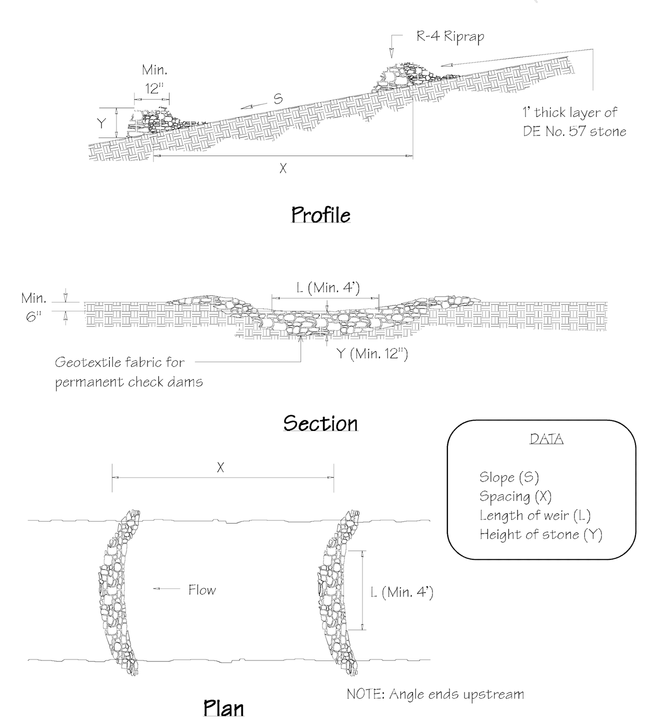

Source:	Symbol:	Detail No.
Adapted from MD Stds. & Specs. for ESC	SCD	DE-ESC-3.3.6 Sheet 1 of 2 Date: 6/05

Standard Detail & Specifications
Stone Check Dam

Construction Notes:

1. Swales and channels shall be prepared in accordance with the construction specifications described in the **Standards and Specifications for Temporary Berm**, **Temporary Swale**, **Vegetated Channel**, or **Diversions**.
2. The check dam shall be constructed of 4" to 8" riprap. The riprap shall be placed so that it completely covers the width of the channel.
3. The top of the check dam shall be constructed so that the center is approximately 6" lower than the outer edges, forming a weir that the water can flow across. The minimum length of weir shall be 4'.
4. The maximum height of the check dam at the center of the weir must not exceed two (2) feet.
5. Maximum spacing between dams should be the distance in the channel where the toe of the upstream dam is at the same elevation as the top of the downstream dam. (See **Standard & Specifications for Check Dams** for design chart.)

Source:	Symbol:	Detail No.
Adapted from MD Stds. & Specs. for ESC	SCD	DE-ESC-3.3.6 Sheet 2 of 2 Date: 6/05

Standard Detail & Specifications
Diversion

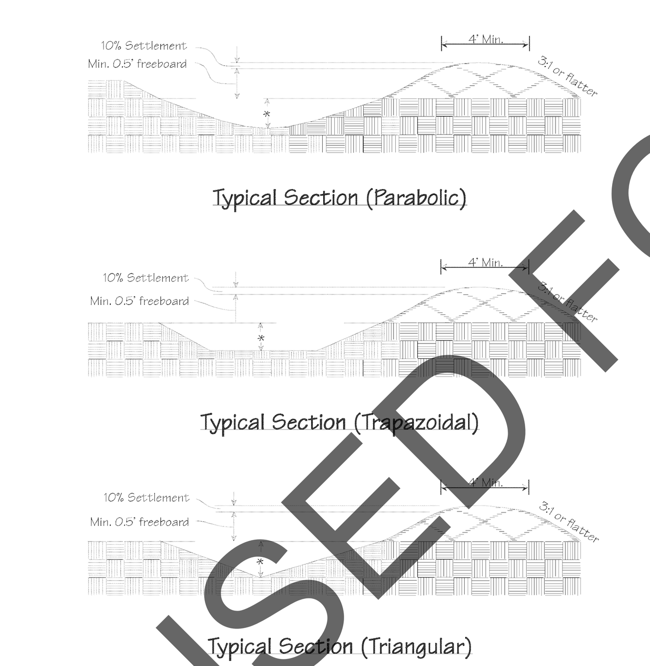

*Flow section to be designed and constructed in accordance with Standard & Specification for Vegetated Channel or Lined Channel. (See separate detail.)

Source:	Symbol:	Detail No.
Adapted from VA ESC Handbook	(VC/LC)- (P/T) → D →	DE-ESC-3.3.5 Sheet 1 of 2 Date: 12/03

Standard Detail & Specifications
Diversion

Construction Notes

1. All trees, brush, stumps, obstructions, and other objectionable material shall be removed and disposed of so as not to interfere with the proper functioning of the diversion.
2. The diversion shall be excavated or shaped to line, grade, and cross section as required to meet the criteria specified herein, and be free of irregularities which will impede normal flow.
3. Fills shall be compacted as needed to prevent unequal settlement that would cause damage in the completed diversion.
4. All earth removed and not needed in construction shall be spread or disposed of so that it will not interfere with the functioning of the diversion.
5. Flow section shall be installed in accordance with the Standard and Specifications for Vegetated Channel or Lined Channel, as appropriate.
6. Stabilization shall be done according to the appropriate Standard and Specifications for Vegetative Stabilization.

Source:	Symbol:	Detail No.
Adapted from VA ESC Handbook	(VC/LC)- (P/T) → D →	DE-ESC-3.3.5 Sheet 2 of 2 Date: 12/03

Standard Detail & Specifications
Geotextile Dewatering Bag

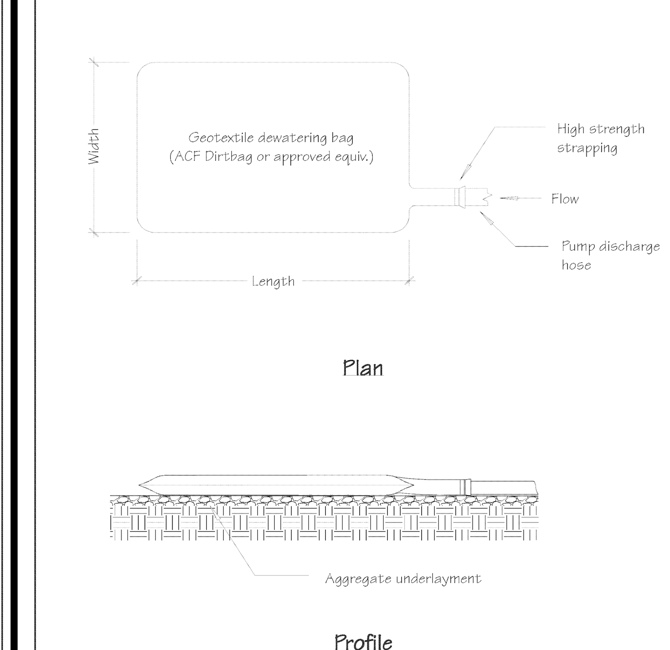

Source:	Symbol:	Detail No.
Adapted from ACF Products, Inc.	GB	DE-ESC-3.2.1.2 Sheet 1 of 2 Date: 12/03

Standard Detail & Specifications
Geotextile Dewatering Bag

Construction Notes:

1. The dewatering bag should be placed so the incoming water flows into and through the bag, and then flow off the site without creating more erosion. The neck should be tied off tightly to stop the water from flowing out of the bag without going through the walls. The dewatering bag should be placed on a gravel bed to allow water to flow in all directions.
2. The dewatering bag is considered full and should be disposed when it is impractical for the bag to filter the sediment out at a reasonable flow rate. At this point, it should be replaced with a new bag.
3. Disposal may be accomplished as directed by the construction reviewer. If the site allows, the bag may be buried on site and seeded, visible fabric removed and seeded or removed from site to a proper disposal area.

Materials:

1. The geotextile fabric shall be a Type GD-IV.
2. The dewatering bag shall be sewn with a double needle machine using high strength thread. All structural seams will be sewn with high strength, double stitched "J" type. Seam strength test will have the following minimum average roll values:

Type	TEST METHOD	TEST RESULT
Heavy duty	ASTM D-4884	100 lb / in

3. The dewatering bag shall have an opening large enough to accommodate a four (4) inch discharge hose with attached strap to tie off the hose to prevent the pumped water from escaping from the bag without being filtered.

Source:	Symbol:	Detail No.
Adapted from ACF Products, Inc.	GB	DE-ESC-3.2.1.2 Sheet 2 of 2 Date: 12/03

Standard Detail & Specifications
Dust Control

Temporary Methods:

1. Mulches - See **DE-ESC-3.4.5**, Standard Detail and Specifications for Mulching.
2. Vegetative cover - See **DE-ESC-3.4.3**, Std. Detail and Specifications for Vegetative Stabilization.
3. Adhesives - Use on mineral soils only (not effective on muck soils). Keep traffic off these areas. The following table may be used for general guidance.

Type of Emulsion	Water Dilution	Type of Nozzle	Apply Gal/Ac.
Latex emulsion	12.5:1	Fine spray	235
Resin-in-water emulsion	4:1	Fine spray	300
Acrylic emulsion (non-trafffic)	7:1	Coarse spray	450
Acrylic emulsion (traffic)	3.5:1	Coarse spray	350

4. Tillage - For emergency temporary treatment, scarify the soil surface to prevent or reduce the amount of blowing dust until a more appropriate solution can be implemented. Begin the tillage operation on the windward side of the site using a chisel-type plow for best results.
5. Sprinkling - Sprinkle site with water until the surface is moist. Repeat as needed.
6. Calcium Chloride - Apply as flakes or granular material with a spreader at a rate that will keep the soil surface moist. Re-apply as necessary.
7. Barriers - Place barriers such as soild board fences, snow fences, hay bales, etc. at right angles to the prevailing air currents at intervals of approx. 10X their height.

Permanent Methods:

1. Vegetative cover - See **DE-ESC-3.4.3**, Std. Detail and Specifications for Vegetative Stabilization.
2. Stone - Apply layer of crushed stone or coarse gravel to protect soil surface.

Source:	Symbol:	Detail No.
Adapted from VA ESC Handbook		DE-ESC-3.4.8 Sheet 1 of 1 Date: 12/03

Standard Detail & Specifications
Concrete Washout

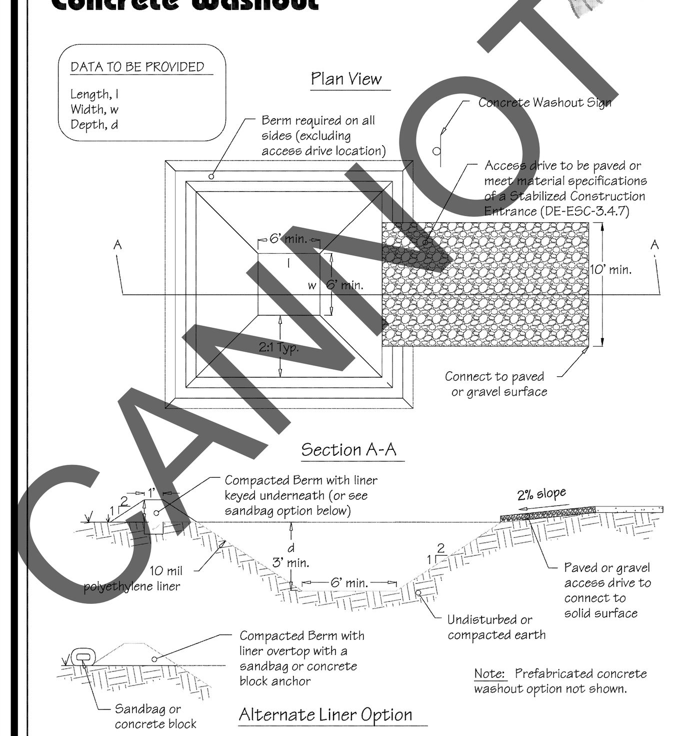

Source:	Symbol:	Detail No.
Adapted from Colorado Urban Storm Drainage Criteria Manual, Vol 3	CW	DE-ESC-3.6.2 Sheet 1 of 2 Date: 03/13

Standard Detail & Specifications
Concrete Washout

Construction Notes:

1. Locate washout area a minimum of 50 feet from open channels, stormdrain inlets, wetlands or waterbodies.
2. Locate washout area so that it is accessible to concrete equipment (service with a minimum 10 foot wide gravel accessway), but so it is not in a highly active construction area causing accidental damage.
3. Minimum dimensions for prefabricated units are 4 feet by 4 feet by 1 foot deep with a minimum 4mil polyethylene plastic liner. Minimum dimensions for constructed concrete washout areas are 6 feet by 6 feet by 3 feet deep, with a minimum 10mil polyethylene liner, 2:1 side slopes, and a 1 foot high by 1 foot wide compacted fill berm.
4. The liner must be free of tears or holes and placed over smooth surfaces to prevent puncturing. For excavated washouts, anchor the liner underneath the berm or overtop with sandbags or concrete blocks to hold in place.
5. Provide a sign designating the washout area, and for large construction sites, provide signs throughout directing traffic to its location.
6. Allow washed out concrete mixture to harden through evaporation of the wastewater. Once the facility has reached 75 percent of its capacity, remove the hardened concrete by reusing the broken aggregate onsite, recycling, or disposing of offsite. The hardened material can be buried on site with minimum of 1 foot of clean, compacted fill.
7. Apply a new liner before reusing the station for additional washouts after maintenance has occurred.

Source:	Symbol:	Detail No.
Adapted from Colorado Urban Storm Drainage Criteria Manual, Vol 3	CW	DE-ESC-3.6.2 Sheet 2 of 2 Date: 03/13

PROJECT NAME: DELAWARE VETERANS MEMORIAL CEMETERY – MILLSBORO.

PLAN SET: SEDIMENT AND STORMWATER MANAGEMENT PLANS

PROJECT LOCATION: 26669 PATRIOTS WAY, MILLSBORO, DE 19966 DAGSBORO HUNDRED, SUSSEX COUNTY, DELAWARE

WATERSHED: COWBRIDGE MILLSBORO POND WATERSHED

TAX PARCEL No. 133–7.00–8.00

Revisions: | Date

CONSULTANTS:

STRUCTURAL
STEINLE CONSTRUCTION ENGINEERS
A DIVISION OF VANDEMARK & LYNCH, INC.
SCE
4305 MILLER ROAD
WILMINGTON, DE 19802, 302-764-7635
www.steinleengineers.com

MECHANICAL/ELECTRICAL
PARAGON ENGINEERING CORPORATION
MECHANICAL/ELECTRICAL
708 Philadelphia Pike
Wilmington, DE 19809
ph: 302.762.6010
fax: 302.762.0653

IRRIGATION
Aqua Engineering, Inc.
Innovative Water Solutions
4803 Innovation Drive
Fort Collins, Colorado 80525
Phone (970) 229-9668
FAX (970) 226-3855

GEOTECHNICAL
GTA
GEO-TECHNOLOGY ASSOCIATES, INC.
18 Boulden Circle, Suite 36
New Castle, DE 19720
Tel: 302-326-2100

CEMETERY DESIGN
The LA GROUP
Landscape Architecture & Engineering P.C.
People. Purpose. Place.
40 Long Alley
Saratoga Springs
NY 12866
p 518-587-8100
f 518-587-0180
www.thelagroup.com

ARCHITECT/ENGINEER:
VANDEMARK & LYNCH, INC.
ENGINEERS – PLANNERS – SURVEYORS
4305 MILLER ROAD
WILMINGTON, DE 19802/(302) 764-7635
WWW.VANDEMARKLYNCH.COM

STEPHEN L. JOHNS REGISTERED PROFESSIONAL ENGINEER NO. 5976 DELAWARE

U.S. DEPARTMENT OF VETERANS AFFAIRS

Drawing Title: CONSTRUCTION SITE DETAILS & NOTES

Approved: Project Director

Project Title: DELAWARE VETERANS MEMORIAL CEMETERY

Location: MILLSBORO, DELAWARE

Date: 5/02/2016 | Checked: SLJ | Drawn: JH

Project Number: DE–13–21

Building Number:

Drawing Number: CG501

Dwg 15 of 28

State of Delaware
Division of Facilities Management

VA FORM 08–6231, OCT 1978

BID SET DOCUMENTS SUBMISSION

Plotted By: BILL JOHNSON
Save Date: 4/14/2016 11:25 AM
File Name: P:\Land Projects\24059 Veterans Cemeteries\24059.04 Veterans Cemetery - Millsboro\Plan Production\Construction Plan\24059.04-EROS-DET-01.dwg

Standard Detail & Specifications

Topsoiling

Construction Notes:

1. **Site Preparation** (Where Topsoil is to be added)

   Note: When topsoiling, maintain needed erosion and sediment control practices such as diversions, grade stabilization structures, berms, dikes, waterways and sediment basins.

   a. Grading - Grades on the areas to be topsoiled which have been previously established shall be maintained.

   b. Liming - Where the topsoil is either highly acid or composed of heavy clays, ground limestone shall be spread at the rate of 4-8 tons/acre (200-400 pounds per 1,000 square feet). Lime shall be distributed uniformly over designated areas and worked into the soil in conjunction with tillage operations as described in the following procedures.

   c. Tilling - After the areas to be topsoiled have been brought to grade, and immediately prior to dumping and spreading the topsoil, the subgrade shall be loosened by discing or by scarifying to a depth of a least 3 inches to permit bonding of the topsoil to the subsoil. Pack by passing a bulldozer up and down over the entire surface area of the slope to create horizontal erosion check slots to prevent topsoil from sliding down the slope.

2. **Topsoil Material and Application**

   Note: Topsoil salvaged from the existing site may often be used but it should meet the same standards as set forth in these specifications. The depth of topsoil to be salvaged shall be no more than the depth described as a representative profile for that particular soil type as described in the soil survey published by USDA-SCS in cooperation with Delaware Agricultural Experimental Station.

Source:	Symbol:	Detail No.
USDA - NRCS		DE-ESC-3.4.1 Sheet 1 of 2 Date: 12/03

Standard Detail & Specifications

Topsoiling

Construction Notes (cont.)

a. Materials - Topsoil shall be a loam, sandy loam, clay loam, silt loam, sandy clay loam, loamy sand or other soil as approved by an agronomist or soil scientist. It shall not have a mixture of contrasting textured subsoil and contain no more than 5 percent by volume of cinders, stones, slag, coarse fragment, gravel, sticks, roots, trash or other extraneous materials larger than 1-1/2 inches in diameter. Topsoil must be free of plants or plant parts of bermudagrass, quackgrass, Johnsongrass, nutsedge, poison ivy, thistles, or others as specified. All topsoil shall be tested by a reputable laboratory for organic matter content, pH and soluble salts. A pH of 6.0 to 7.5 and an organic content of not less than 1.5 percent by weight is required. If pH value is less than 6.0 lime shall be applied and incorporated with the topsoil to adjust the pH to 6.5 or higher. Topsoil containing soluble salts greater than 500 parts per million shall not be used.

Note: No sod or seed shall be placed on soil which has been treated with soil sterilants or chemicals used for weed control until sufficient time has elapsed to permit dissipation of toxic materials.

b. Grading - The topsoil shall be uniformly distributed and compacted to a minimum of four (4) inches. Spreading shall be performed in such a manner that sodding or seeding can proceed with a minimum of additional soil preparation and tillage. Any irregularities in the surface resulting from topsoiling or other operations shall be corrected in order to prevent the formation of depressions or water pockets. Topsoil shall not be placed while in a frozen or muddy condition, when the subgrade is excessively wet, or in a condition that may otherwise be detrimental to proper grading and seedbed preparation.

Note: Topsoil substitutes or amendments as approved by a qualified agronomist or soil scientist, may be used in lieu of natural topsoil.

Source:	Symbol:	Detail No.
USDA - NRCS		DE-ESC-3.4.1 Sheet 2 of 2 Date: 12/03

Standard Detail & Specifications

Mulching

1. **Materials and Amounts**

   a. *Straw* - Straw shall be unrotted small grain straw applied at the rate of 1-1/2 to 2 tons per acre, or 70 to 90 pounds (two bales) per 1,000 square feet. Mulch materials shall be relatively free of weeds and shall be free of noxious weeds such as, thistles, Johnsongrass, and quackgrass. Spread mulch uniformly by hand or mechanically. For uniform distribution of hand spread mulch, divide area into approximately 1,000 square feet sections and place 70-90 pounds (two bales) of mulch in each section.

   b. *Wood chips* - Apply at the rate of approximately 6 tons per acre or 275 pounds per 1,000 square feet when available and when feasible. These are particularly well suited for utility and road rights-of-way. If wood chips are used, increase the application rate of nitrogen fertilizer by 29 pounds of N per acre (200 pounds of 16-10-10 or 66 pounds of 30-0-0 per acre).

   c. *Hydraulically applied mulch* - The following conditions apply to hydraulically applied mulch:

      i. Definitions:

         a. Wood fiber mulch shall consist of specially prepared wood that has been processed to a uniform state, is packaged for sale as a hydraulic mulch for use with hydraulic seeding equipment, and consists of a minimum of 70% virgin or recycled wood fiber combined with 30% paper fiber and additives.

         b. Blended fiber mulch shall consist of any hydraulic mulch that contains greater than 30% paper fiber. The paper component must consist of specially prepared paper that has been processed to a uniform fibrous state and is packaged for sale as a hydraulic mulch for use with hydraulic seeding equipment.

         c. A bonded fiber matrix (BFM) consists of long strand, specially prepared wood fibers that have been processed to a uniform state held together by a water resistant bonding agent. BFMs shall contain no paper (cellulose) mulch but may contain small percentages of synthetic fibers to enhance performance.

         d. Refer to **Figure 3.4.5a** for conditions and limitations of use for each of the above categories of hydraulic mulch.

      ii. All components of the hydraulically applied mulches shall be pre-packaged by the manufacturer to assure material performance. Field mixing of the mulch components is acceptable, but must be done per manufacturers recommendations to ensure the proper results.

      iii. Hydraulic mulches shall be applied with a visible seed and at manufacturer's recommended rates. Increased rates may be necessary based on site conditions.

      iv. Hydraulically applied mulches and additives shall be mixed according to manufacturers recommendations.

      v. Materials within this category shall only be used when hydraulically applied mulch has been specified for use on the approved Sediment and Stormwater Plan, or supplemental approval from the plan approval agency has been obtained in writing for a specific area.

Source:	Symbol:	Detail No.
Delaware ESC Handbook		DE-ESC-3.4.5 Sheet 1 of 3 Date: 6/05

Standard Detail & Specifications

Mulching

      vi. Application:

         a. Apply product to geotechnically stable slopes that have been designed and constructed to divert runoff away from the face of the slope.

         b. Do not apply to saturated soils, or if precipitation is anticipated within 24-48 hours.

         c. During the spring (March 1 to May 31) and fall (September 1 to November 30) seasons, hydraulic mulches may be applied in a one-step process where all components are mixed together in single-tank loads. It is recommended that the product be applied from opposing directions to achieve optimum soil coverage.

         d. During the summer (June 1 to August 31) and winter (December 1 to February 28) seasons, the following two-step process is required:

            Step One– Mix and apply seed and soil amendments with a small amount of mulch for visual metering.

            Step Two – Mix and apply mulch at manufacturers recommended rates over freshly seeded surfaces. Apply from opposing directions to achieve optimum soil coverage.

         e. Minimum curing temperature is 40° F (4° C). The best results and more rapid curing are achieved at temperatures exceeding 60° F (15° C). Curing times may be accelerated in high temperature, low humidity conditions on dry soils.

      vi. Recommended application rates are for informational purposes only. Conformance with this standard and specification shall be performance-based and requires **100% soil coverage**. Any areas with bare soil showing shall be top-dressed until full coverage is achieved.

2. **Anchoring mulch** - Mulch must be anchored immediately to minimize loss by wind or water. This may be done by one of the following methods, depending upon size of area, erosion hazard, and cost:

   a. *Crimping* - A crimper - a tractor drawn implement designed to punch and anchor mulch into the top two (2) inches of soil. This practice affords maximum erosion control but is limited to flatter slopes where equipment can operate safely. On sloping land, crimping should be done on the contour whenever possible.

   b. *Tracking* - Tracking is the process of cutting mulch (usually straw) into the soil using a bulldozer or other equipment that runs on cleated tracks. Tracking is used primarily on slopes 3:1 or steeper and should be done up and down the slope with cleat marks running across the slope.

   c. *Liquid mulch binders* - Applications of liquid mulch binders should be heavier at edges, in valleys, and at crests of banks and other areas where the mulch will be moved by wind or water. All other areas should have a uniform application of binder. The use of synthetic binders is the preferred method of mulch binding and should be applied at the rates recommended by the manufacturer.

   d. *Paper fiber* - The fiber binder shall be applied at a net dry weight of 750 lbs/ac. The wood cellulose fiber shall be mixed with water, and the mixture shall contain a maximum of 50 lbs. of wood cellulose fiber per 100 gallons.

   e. *Nettings* - Synthetic or organic nettings may be used to secure straw mulch. Install and secure according to the manufacturers recommendations.

Source:	Symbol:	Detail No.
Delaware ESC Handbook		DE-ESC-3.4.5 Sheet 2 of 3 Date: 6/05

Standard Detail & Specifications

Mulching

MULCHING MATERIAL SELECTION GUIDE

	Dec. 1 to Feb. 28/29	March 1 to May 31	June 1 to Aug. 31	Sept. 1 to Nov. 30
Straw Mulch / Any Mulch	Double rate	OK	OK	OK
Wood Fiber Mulch	OK	OK	Not Recommended	OK
Blended Fiber Mulch	OK	OK	OK	OK
Bonded Fiber Matrix	OK	OK	OK	OK
Chemical Binder	Not Recommended	Not Recommended	Not Recommended	Not Recommended

	Dec. 1 to Feb. 28/29	March 1 to May 31	June 1 to Aug. 31	Sept. 1 to Nov. 30
Straw Mulch / Any Mulch	Double rate, Crimping, Netting, Tracking, Binder, Mulch Anchoring Tool, Manual Anchoring	Single rate, Crimping, Netting, Tracking, Binder, Mulch Anchoring Tool, Manual Anchoring	Single rate, Crimping, Netting, Tracking, Binder, Mulch Anchoring Tool, Manual Anchoring	Single rate, Crimping, Netting, Tracking, Binder, Mulch Anchoring Tool, Manual Anchoring
Wood Fiber Mulch	Binder, Netting, Manual Anchoring	Binder, Netting, Manual Anchoring	Not Recommended	Binder, Netting, Manual Anchoring
Blended Fiber Mulch	Binder, Netting, Manual Anchoring	Binder, Netting, Manual Anchoring	Binder, Netting, Manual Anchoring	Binder, Netting, Manual Anchoring
Bonded Fiber Matrix	Binder, Netting, Manual Anchoring	Binder, Netting, Manual Anchoring	Binder, Netting, Manual Anchoring	Binder, Netting, Manual Anchoring
Chemical Binder	Binder, Netting, Manual Anchoring	Binder, Netting, Manual Anchoring	Binder, Netting, Manual Anchoring	Binder, Netting, Manual Anchoring

* Recommended Mulching rates be adjusted in accordance with Section 3.4.1 of the Delaware ESC Handbook.
** Mulch Anchoring Tool (MAT) - Tracking with a dozer is a form of mulch anchoring and is an acceptable practice. Apply in contours where practical.
*** Polyacrylamide (PAM) - Not to exceed 1 percent by weight when applied to water. Not to exceed 100 pounds per acre when applied to dry mulch.
**** Tackifiers - Follow manufacturer's recommendations for application and use rates.
***** Bonded Fiber Matrix - Follow manufacturer's recommendations for application and use rates.
****** Chemical Binder - Follow manufacturer's recommendations for application and use rates.
******* Polyacrylamide (PAM) - Not to exceed 1 percent by weight when applied to water. Not to exceed 100 pounds per acre when applied to dry mulch.

Source:	Symbol:	Detail No.
		DE-ESC-3.4.5 Sheet 3 of 3 Date: 6/05

Standard Detail & Specifications

Vegetative Stabilization

TEMPORARY SEEDING BY RATES, DEPTHS AND DATES

Mix #	Species[1]	Seeding Rate	Optimum Seeding Dates[2] (1 = Optimum Planting Period; A = Acceptable Planting Period) Coastal Plain	Piedmont	All[3]	Planting Depth[7]
	Certified Seed	lb./ac.[5]	3/1-5/15 / 8/1-9/15	3/1-5/15 / 8/1-9/15	10/1-3/15	
1	Barley	120	A / O	A / O	O	1-2 inches 2.3" sandy soils
2	Oats	120	A / O	A / O	A	1-2 inches 2.3" sandy soils
3	Rye	120	A / O	A / O	A	1-2 inches 2.3" sandy soils
4	Perennial Ryegrass	120	A / O	A / O	A / O	1-2 inches 1.2" sandy soils
5	Annual Ryegrass	120	A / O	A / O	A	0.5 inches 1.2" sandy soils
6	Winter Wheat	120	A / O	A / O	A / O	1-2 inches 2.3" sandy soils
7	Foxtail Millet	30 PLS	0.7	O	O	0.5 inches 1.2" sandy soils
8	Pearl Millet	20 PLS	0.5	O	O	0.5 inches 1.2" sandy soils

1. Winter seeding requires 3 tons per acre of straw mulch for proper stabilization.
2. May be planted throughout summer if soil moisture is adequate or seeded area can be irrigated.
3. Applicable on slopes 3:1 or less.
4. Fifty pounds per acre of Annual Lespedeza may be added to 1/2 the seeding rate of any of the above species.
5. Use varieties currently recommended for Delaware. Contact a County Extension Office for information.
6. Warm season grasses such as Millet or Weeping Lovegrass may be seed between 5/1 and 9/1 if deemed. Seed at 3-5 lbs. per acre. Good on low fertility and acid areas. Seed after frost through summer at a depth of 0.5".

Source:	Symbol:	Detail No.
Delaware ESC Handbook		DE-ESC-3.4.3 Sheet 1 of 4 Date: 12/03

Standard Detail & Specifications

Vegetative Stabilization

PERMANENT SEEDING AND SEEDING DATES

Mix No.	Seeding Mixtures: Certified Seed[1]	Seeding Rate[2] lb./ac.	Optimum Seeding Dates[3] (1 = Optimum Planting Period; A = Acceptable Planting Period) Coastal Plain 3/1-5/15	8/1-9/15	Piedmont 3/1-5/15	8/1-9/15	All[4] 10/1-3/15	Remarks
	Poorly Drained Soils							
1	Redtop Pennlawn Fescue Rough Bluegrass Seedling Alder	10 20 10 10	1-2 A A A	A O O O	1-2 A A A	A O O O	A A A A	Quick establishment of disturbed sites and catastrophy.
2	Fresh Clover Rough Bluegrass	10 20	A A	O O	A A	O O	A A	Good erosion control, wildlife cover and wetland revegetation.
	Residential Lawns							
1.1	Tall Fescue Perennial Ryegrass Kentucky Bluegrass Blend	50 10 20	2-3 0.5-1 0.69	A A A	A O A	O A A	A A A	High value, high maintenance, light traffic, irrigation necessary. Well drained soils, full sun.
1.2	Tall Fescue Perennial Ryegrass Fine Fescue	50 10 20	2-3 0.5-1 0.37	A A A	A O A	O A A	A A A	Moderate value, moderate maintenance, moderate traffic tolerance.
1.3	Creeping Red Fescue Chewings Fescue Rough Bluegrass Kentucky Bluegrass	30 20 10 10	1-2 1-1.5 0.4 0.69	A A O A	O O O A	A A O A	A A A A	Shade tolerant, moderate traffic tolerance, moderate maintenance.
1.4	Creeping Red Fescue Rough Bluegrass **or** Chewings Fescue	30 10	1-2 2-3	A O	O A	A O	A A	Shade tolerant, moderate tolerant.
1.5	Tall Tall Fescue	50	2-3	A	A	O	A	A	Monoculture, but preferable when alone in lawns. Disease tolerant.

1. When hydroseeding is the chosen method of application, the total rate of seed should be increased by 25%.
2. Winter seeding requires 3 tons per acre of straw mulch. Planting dates listed above are average for Delaware. These dates may require adjustment to reflect local conditions.
3. All seed shall meet the minimum purity and minimum germination percentages recommended by the Delaware Department of Agriculture. The maximum % of weed seeds shall be in accordance with Section 1, Chapter 24, Title 3 of the Delaware Code.
4. Cool season species may be planted throughout summer if soil moisture is adequate or seeded area can be irrigated.
5. Use varieties currently recommended.
6. Warm season grass mix and Weed Canary Grass cannot be mowed more than 4 times per year.
7. Warm season grasses require a soil temperature of at least 50 degrees in order to germinate, and will remain dormant until then.

Source:	Symbol:	Detail No.
Delaware ESC Handbook		DE-ESC-3.4.3 Sheet 2 of 4 Date: 12/03

Standard Detail & Specifications

Vegetative Stabilization

PERMANENT SEEDING AND SEEDING DATES (cont.)

Mix No.	Seeding Mixtures: Certified Seed[1]	Seeding Rate[2] lb./ac.	Optimum Seeding Dates[3] (1 = Optimum Planting Period; A = Acceptable Planting Period) Coastal Plain 3/1-5/15	8/1-9/15	Piedmont 3/1-5/15	8/1-9/15	All[4] 10/1-3/15	Remarks
	Poorly Drained Soils							
2	Redtop Creeping Bentgrass Fresh Clover Rough Bluegrass	10 10 10 20	1-2 A A A	A A O O	1-2 A A A	A A O O	A A A A	Quick establishment of disturbed sites and catastrophy.
3	Tall Fescue Creeping Red Fescue **or** Perennial Ryegrass **or** Redtop	50 30 10 5	1-2 1-2 0.5-1 0.11	O O A O	A A A O	O O O O	A A A A	Good erosion control, low maintenance, low fertility, adverse conditions. Creeping Red Fescue for heavy shade. Redpoll is a species variety vegetation.
4	Mixing Creeping Red Fescue Perennial Rye **or** Perennial Ryegrass **or** Redtop	100 10 10 5	1-2 0.5-1 0.5-1 0.11	O A A O	A O O O	O A A O	A A A A	Add 100 lbs./ac. Winter Rye. Suitable waterway and erosion control. Tolerant of extensive drought tolerant. Use Redtop for increased drought tolerance.
plus one of:								
5.1	Annual Ryegrass **or** Foxtail Millet	15 15	0.5-1 0.5-1	A O	O O	O O	A A	Spring, late season mixture. Tolerant of low fertility soils. Drought tolerant. Poor shade tolerance. Annual Ryegrass overseeds.
5.2	Sudangrass, Sun Hybrid Source of Sudangrass	15 15	0.5-1 0.5-1	A A	A A	A A	A A	Summer annual, fast growth, tolerant of low fertility.
5.3	Tall Fescue Ky. Bluegrass (Blend) Annual Ryegrass	10 20 15	0.69 0.46 0.5-1	A A A	A A O	A A O	A A A	Meets no mow of Kentucky Bluegrass. Traffic tolerant. Poor shade tolerance.
5.4	Hulled Common Bermudagrass Inner Grass[6] Lifer Bluestem[6]	10 5 6	0.25 0.12 0.16	A O O	A A A	A A A	A A A	All species are native warm season grasses. Nutty seeds. Plant with a specialized native seed drill.
plus one of:								
5.5	Tall Fescue Rough Bluegrass Fresh Clover	5 5 2	0.11 0.12 0.05	A O O	A A A	A O O	A A A	Creeping Red Fescue will provide erosion protection while Inner Grass is established.

Source:	Symbol:	Detail No.
Delaware ESC Handbook		DE-ESC-3.4.3 Sheet 3 of 4 Date: 12/03

Standard Detail & Specifications

Vegetative Stabilization

Source:	Symbol:	Detail No.
Delaware ESC Handbook		DE-ESC-3.4.3 Sheet 4 of 4 Date: 12/03

Standard Detail & Specifications

Stabilization Matting - Slope

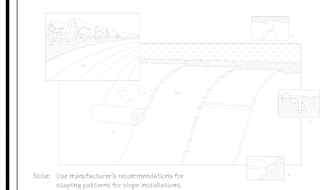

Note: Use manufacturer's recommendations for stapling patterns for slope installations.

Perspective

Construction Notes:

1. Prepare soil before installing matting, including application of lime, fertilizer, and seed.
2. Begin at the top of the slope by anchoring the mat in a 6" deep X 6" wide trench. Backfill and compact trench after stapling.
3. Roll the mats (A) down or (B) horizontally across the slope.
4. The edges of parrallel mats must be stapled with approx. 2" overlap.
5. When mats must be spliced down the slope, place mats end over end (shingle style) with approx. 4" overlap. Staple through overlapped area, approx. 12" apart.

Source:	Symbol:	Detail No.
Adapted from North American Green, Inc.	SM-S	DE-ESC-3.4.6.1 Sheet 1 of 2 Date: 6/05

Standard Detail & Specifications

Stabilization Matting - Slope

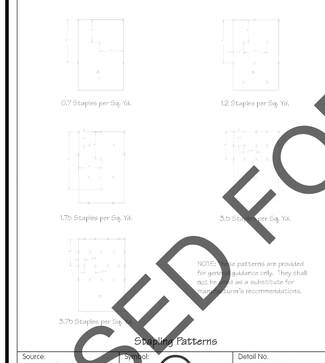

Source:	Symbol:	Detail No.
Adapted from North American Green, Inc.	SM-S	DE-ESC-3.4.6.1 Sheet 2 of 2 Date: 6/05

Standard Detail & Specifications

Stabilization Matting - Channel

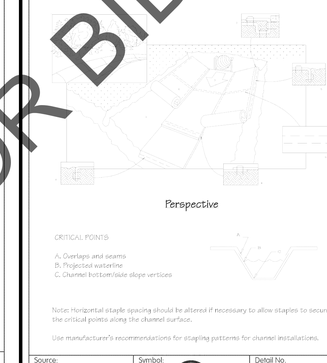

Source:	Symbol:	Detail No.
Adapted from North American Green, Inc.	SM-C	DE-ESC-3.4.6.2 Sheet 1 of 3 Date: 6/05

Standard Detail & Specifications

Stabilization Matting - Channel

Construction Notes:

1. Prepare soil before installing matting, including application of lime, fertilizer, and seed.
2. Begin at the top of the channel by anchoring the mat in a 6" deep X 6" wide trench. Backfill and compact the trench after stapling.
3. Roll center mat in direction of water flow on bottom of channel.
4. Place mats end over end (shingle style) with a 6" overlap, use a double row of staggered staples 4" apart to secure mats.
5. Full Length edge of mats at top of side slopes must be anchored in 6" deep X 6" wide trench; backfill and compact the trench after stapling.
6. Mats on side slopes must be overlapped 4" over the center mat and stapled.
7. In high flow channel applications, a staple check slot is recommended at 30 to 40 foot intervals. Use a row of staples 4" apart over entire width of the channel. Place a second row 4" below the first row in a staggered pattern.
8. The terminal end of the mats must be anchored in a 6" X 6" wide trench. Backfill and compact the trench after stapling.

Source:	Symbol:	Detail No.
Adapted from North American Green, Inc.	SM-C	DE-ESC-3.4.6.2 Sheet 2 of 3 Date: 6/05

Standard Detail & Specifications

Stabilization Matting - Channel

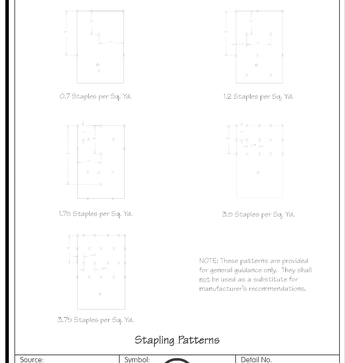

Source:	Symbol:	Detail No.
Adapted from North American Green, Inc.	SM-C	DE-ESC-3.4.6.2 Sheet 3 of 3 Date: 6/05

Standard Detail & Specifications

Construction Site Waste Mgt & Spill Control

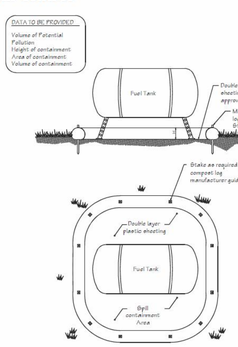

Source:	Symbol:	Detail No.
Delaware ESC Handbook		DE-ESC-3.6.1 Sheet 1 of 5 Date: 03/13

Standard Detail & Specifications

Construction Site Waste Mgt & Spill Control

Pollution Prevention – Spill Prevention

1. Fueling should only take place in signed designated areas, away from downstream drainage facilities and watercourses.
2. Fueling must be with nozzles equipped with automatic shut-off to control drips. Do not top off.
3. Protect the areas where equipment or vehicles are being repaired, maintained, fueled or parked from storm water run-on and runoff.
4. Use barriers such as berms to prevent storm water run-on and runoff, and to contain spills.
5. Place a "Fueling Area" sign next to each fueling area.
6. Store hazardous materials such as fuel, solvents, oil and chemicals in secondary containment.
7. Inspect vehicles and equipment for leaks on each day of use. Repair fluid and oil leaks immediately.
8. Absorbent spill clean-up materials and spill kits must be available in fueling areas and on fuel trucks.
9. If fueling is to take place at night, make sure the fueling area is sufficiently illuminated.
10. Properly dispose of used oil, fluids, lubricants and spill clean-up materials.

CLEAN UP SPILLS

1. If it is safe to do so, immediately contain and clean up any chemical and/or hazardous material spills.
2. Properly dispose of used oil, fluids, lubricants and spill clean-up materials.
3. Do not bury spills or wash them down with water.

LEAKS AND DRIPS

1. Use drip pans or absorbent pads at all times. Place under and around leaky equipment.
2. Do not allow oil, grease, fuel or chemicals to drip onto the ground.
3. Have spill kits and clean up material on-site.
4. Repair leaky equipment promptly or remove problem vehicles and equipment from the site. Clean up contaminated soil immediately.
5. Store contaminated waste in sealed containers constructed of suitable material. Label these containers properly.
6. Clean up all spills and leaks. Promptly dispose of waste and spent clean up materials.

Source:	Symbol:	Detail No.
Delaware ESC Handbook		DE-ESC-3.6.1 Sheet 2 of 5 Date: 03/13

Standard Detail & Specifications

Construction Site Waste Mgt & Spill Control

Notes:

The Construction Site Pollution Prevention Plan should include the following elements:

1. **Material Inventory**

   Document the storage and use of the following materials:

   a. Concrete
   b. Detergents
   c. Paints (enamel and latex)
   d. Cleaning solvents
   e. Pesticides
   f. Wood scraps
   g. Fertilizers
   h. Petroleum based products

2. **Good housekeeping practices**

   a. Store only enough product required to do the job.
   b. All materials shall be stored in a neat, orderly manner in their original labeled containers and covered.
   c. Substances shall not be mixed.
   d. When possible, all of a product shall be used up prior to disposal of the container.
   e. Manufacturers' instructions for disposal shall be strictly adhered to.
   f. The site foreman shall designate someone to inspect all BMPs daily.

3. **Waste management practices**

   a. All waste materials shall be collected and stored in securely lidded dumpsters in a location that does not drain to a waterbody.
   b. Waste materials shall be salvaged and/or recycled whenever possible.
   c. The dumpsters shall be emptied a minimum of twice per week, or more if necessary. The licensed trash hauler is responsible for cleaning out dumpsters.

Source:	Symbol:	Detail No.
Adapted from USEPA Pub. 840-B-92-002		DE-ESC-3.6.1 Sheet 3 of 5 Date: 03/13

Standard Detail & Specifications

Construction Site Waste Mgt & Spill Control

Notes (cont.)

   d. Trash shall be disposed of in accordance with all applicable Delaware laws.
   e. Trash cans shall be placed at all lunch spots and littering is strictly prohibited. Recycle bins shall be placed near the construction trailer.
   f. If fertilizer bags can not be stored in a weather-proof location, they shall be kept on a pallet and covered with plastic sheeting which is overlapped and anchored.

4. **Equipment maintenance practices**

   a. If possible, equipment should be taken to off-site commercial facilities for washing and maintenance.
   b. If performed on-site, vehicles shall be washed with high-pressure water spray without detergents in an area contained by an impervious berm.
   c. Drip pans shall be used for all equipment maintenance.
   d. Equipment shall be inspected for leaks on a daily basis.
   e. Washout from concrete trucks shall be disposed of in a temporary pit for hardening and proper disposal.
   f. Fuel nozzles shall be equipped with automatic shut-off valves.
   g. All used products such as oil, antifreeze, solvents and tires shall be disposed of in accordance with manufacturers' recommendations and local, state and federal laws and regulations.

5. **Spill prevention practices**

   a. Potential spill areas shall be identified and contained in covered areas with no connection to the storm drain system.
   b. Warning signs shall be posted in hazardous material storage areas.
   c. Preventive maintenance shall be performed on all tanks, valves, pumps, pipes and other equipment as necessary.
   d. Low or non-toxic substances shall be prioritized for use.

Source:	Symbol:	Detail No.
Adapted from USEPA Pub. 840-B-92-002		DE-ESC-3.6.1 Sheet 4 of 5 Date: 03/13

Standard Detail & Specifications

Construction Site Waste Mgt & Spill Control

Notes (cont.)

   e. Contact information for reporting spills through the DNREC 24-Hour Toll Free Number shall be prominently posted.

6. **Education**

   a. Best management practices for construction site pollution control shall be a part of regular progress meetings.
   b. Information regarding waste management, equipment maintenance and spill prevention shall be prominently posted in the construction trailer.

CONTACT INFORMATION

DNREC 24-Hour Toll Free Number	**800-662-8802**
DNREC Solid & Hazardous Waste Branch	**302-739-9403**

Source:	Symbol:	Detail No.
Adapted from USEPA Pub. 840-B-92-002		DE-ESC-3.6.1 Sheet 5 of 5 Date: 03/13

CANNOT BE USED FOR BIDDING

PROJECT NAME: DELAWARE VETERANS MEMORIAL CEMETERY – MILLSBORO.

PLAN SET: SEDIMENT AND STORMWATER MANAGEMENT PLANS

PROJECT LOCATION: 26669 PATRIOTS WAY, MILLSBORO, DE 19966 DAGSBORO HUNDRED, SUSSEX COUNTY, DELAWARE

WATERSHED: COWBRIDGE MILLSBORO POND WATERSHED

TAX PARCEL No. 133-7.00-8.00

Revisions:	Date

CONSULTANTS:

STRUCTURAL: STEINLE CONSTRUCTION ENGINEERS A DIVISION OF VANDEMARK & LYNCH, INC. SCE, 4305 MILLER ROAD, WILMINGTON, DE 19802, 302-764-7635, www.steinleengineers.com

MECHANICAL/ELECTRICAL: PARAGON ENGINEERING CORPORATION, MECHANICAL/ELECTRICAL, 708 Philadelphia Pike, Wilmington, DE 19809, ph: 302.762.6010, fax: 302.762.0653

IRRIGATION: Aqua Engineering, Inc., Innovative Water Solutions, 4803 Innovation Drive, Fort Collins, Colorado 80525, Phone (970) 229-9668, FAX (970) 226-3855

GEOTECHNICAL: GEO-TECHNOLOGY ASSOCIATES, INC., 18 Boulden Circle, Suite 36, New Castle, DE 19720, Tel: 302-326-2100

CEMETERY DESIGN: The LA GROUP, Landscape Architecture & Engineering P.C., Purple. Purpose. Place., 40 Long Alley, Saratoga Springs NY 12866, p 518-587-8100, f 518-587-0180, www.thelagroup.com

ARCHITECT/ENGINEER: VANDEMARK & LYNCH, INC., ENGINEERS – PLANNERS – SURVEYORS, 4305 MILLER ROAD, WILMINGTON, DE 19802/(302) 764-7635, WWW.VANDEMARKLYNCH.COM

STEPHEN A. STEINLE, REGISTERED PROFESSIONAL ENGINEER, DELAWARE

U.S. DEPARTMENT OF VETERANS AFFAIRS

Drawing Title	Project Title	Project Number
CONSTRUCTION SITE DETAILS & NOTES	DELAWARE VETERANS MEMORIAL CEMETERY	DE-13-21
Approved: Project Director	Location: MILLSBORO, DELAWARE	Building Number
	Date: 5/02/2016; Checked: SLJ; Drawn: JH	Drawing Number: CG502
		Dwg 16 of 28

State of Delaware — Division of Facilities Management

VA FORM 08-6231, OCT 1978

BID SET DOCUMENTS SUBMISSION

Plotted By: BILL.JOHNSTON
Date/Time: 5/2/2016 10:09:00 AM
File Name: P:\Land Projects\24009 Veterans Cemetery\24009-04 Veterans Cemetery - Millsboro\Plan Production\Construction Plan\24009-04-EROSS-SET-01.dwg

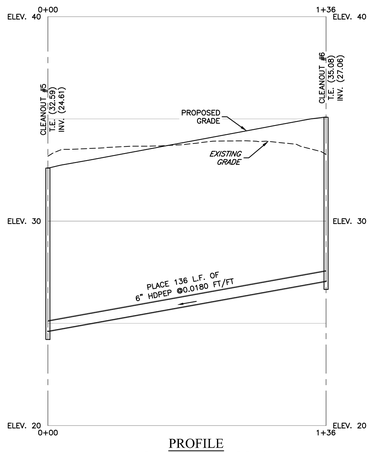

PROFILE
STORM CO#7 TO CO#6
HOR. SCALE= 1" : 30'
VER. SCALE= 1" : 3'

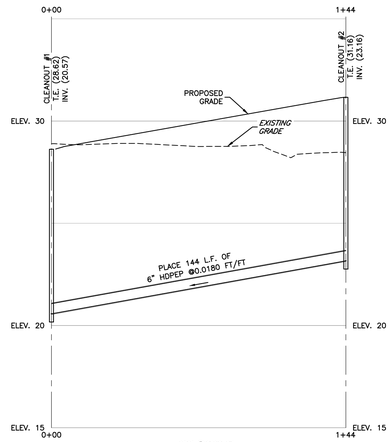

PROFILE
STORM CO#2 TO CO#1
HOR. SCALE= 1" : 30'
VER. SCALE= 1" : 3'

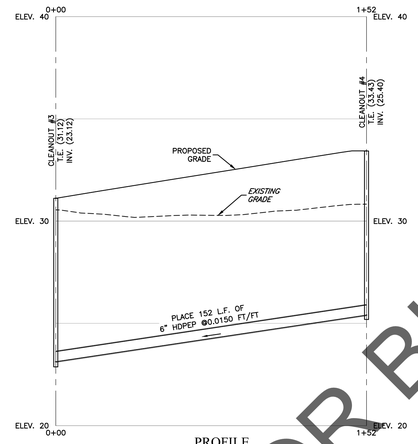

PROFILE
STORM CO#4 TO CO#3
HOR. SCALE= 1" : 30'
VER. SCALE= 1" : 3'

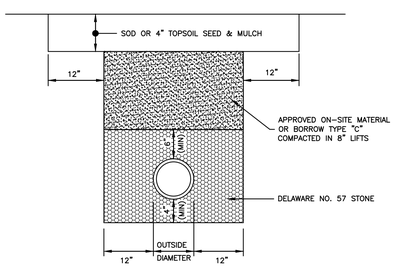

TYPICAL TRENCH DETAIL
NOT TO SCALE

CANNOT BE USED FOR BIDDING

PROJECT NAME: DELAWARE VETERANS MEMORIAL CEMETERY – MILLSBORO.

PLAN SET: SEDIMENT AND STORMWATER MANAGEMENT PLANS

PROJECT LOCATION: 26669 PATRIOTS WAY, MILLSBORO, DE 19966
DAGSBORO HUNDRED,
SUSSEX COUNTY, DELAWARE

WATERSHED: COWBRIDGE MILLSBORO POND WATERSHED

TAX PARCEL No. 133-7.00-8.00

GRAPHIC SCALE
30 0 15 30 60
1 inch = 30 feet

NORTH

Revisions:	Date

CONSULTANTS:

STRUCTURAL
STEINLE CONSTRUCTION ENGINEERS
A DIVISION OF VANDEMARK & LYNCH, INC.
SCE
4305 MILLER ROAD
WILMINGTON, DE 19802, 302-764-7635
www.steinleengineers.com

MECHANICAL/ELECTRICAL
PEC PARAGON ENGINEERING CORPORATION
MECHANICAL/ELECTRICAL
708 Philadelphia Pike
Wilmington, DE 19809
ph: 302.762.6010
fax: 302.762.0653

IRRIGATION
Aqua Engineering, Inc.
Innovative Water Solutions
4803 Innovation Drive
Fort Collins, Colorado 80525
Phone (970) 229-9658
FAX (970) 226-3855

GEOTECHNICAL
GTA
GEO-TECHNOLOGY ASSOCIATES, INC.
18 Boulden Circle, Suite 36
New Castle, DE 19720
Tel: 302-326-2100

CEMETERY DESIGN
The LA GROUP
Landscape Architecture & Engineering P.C.
People. Purpose. Place.
40 Long Alley
Saratoga Springs
NY 12866
p: 518-587-8100
f: 518-587-0180
www.thelagroup.com

ARCHITECT/ENGINEER:
VANDEMARK & LYNCH, INC.
ENGINEERS – PLANNERS – SURVEYORS
4305 MILLER ROAD
WILMINGTON, DE 19802/(302) 764-7635
WWW.VANDEMARKLYNCH.COM

STEPHEN L. JONES
REGISTERED
No. 9511
DELAWARE
PROFESSIONAL ENGINEER
Stephen L. Jones
Retired 5/1/16

U.S. DEPARTMENT OF VETERANS AFFAIRS

Drawing Title
STORM DRAINAGE PROFILES

Approved: Project Director

Project Title
DELAWARE VETERANS MEMORIAL CEMETERY

Location
MILLSBORO, DELAWARE

Date 5/02/2016
Checked SLJ
Drawn JH

Project Number DE-13-21
Building Number
Drawing Number CU201
Dwg 17 of 28

State of Delaware
Division of Facilities Management

VA FORM 08-6231, OCT 1978

BID SET DOCUMENTS SUBMISSION

Plotted By: BILL JOHNSON
Plot Date: 5/2/2016 10:00 AM
File Name: P:\Land Projects\2009 Veterans Ceremony\2009-04 Veterans Cemetery - Millsboro\Plan Production\Construction Plan\2409SL04-CONST-01.dwg

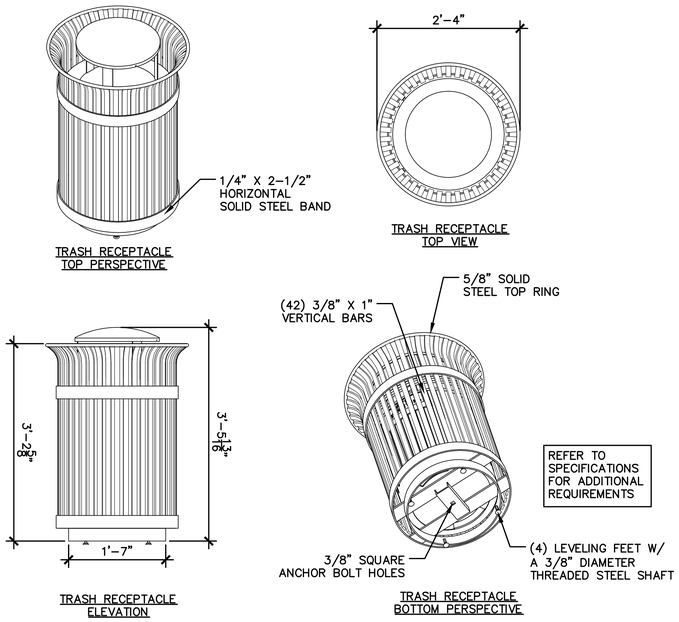

1 TRASH RECEPTACLE

Scale: NTS

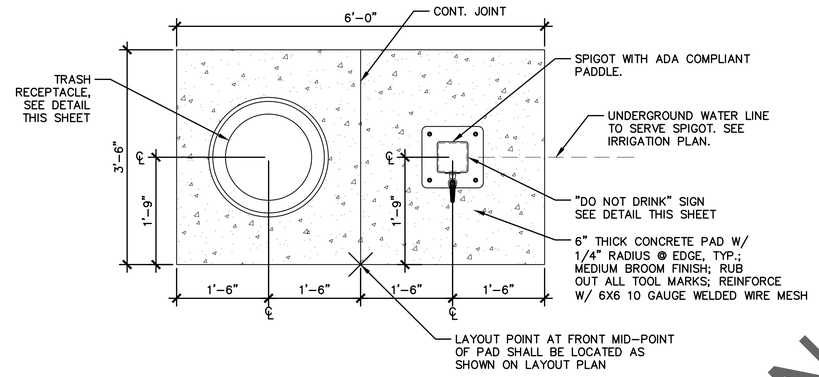

3 FLOWER WATERING STATION

Scale: NTS

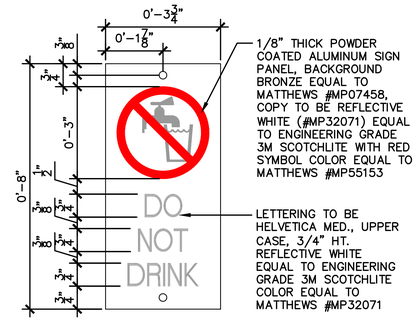

5 SPIGOT SIGNAGE "DO NOT DRINK"

Scale: NTS

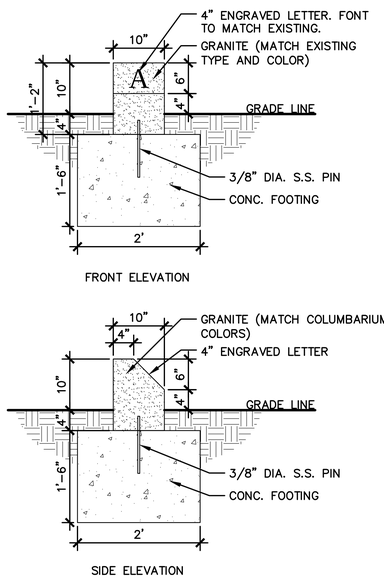

2 SECTION MARKER

Scale: NTS

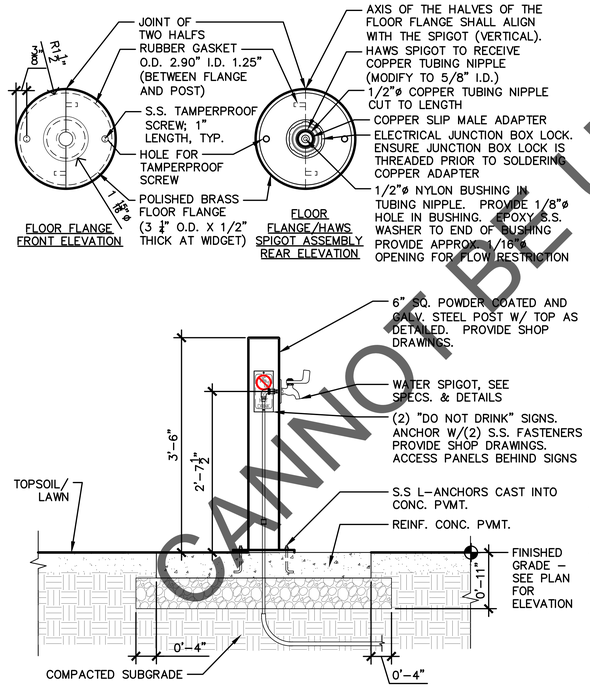

3 WATER SPIGOT DETAILS

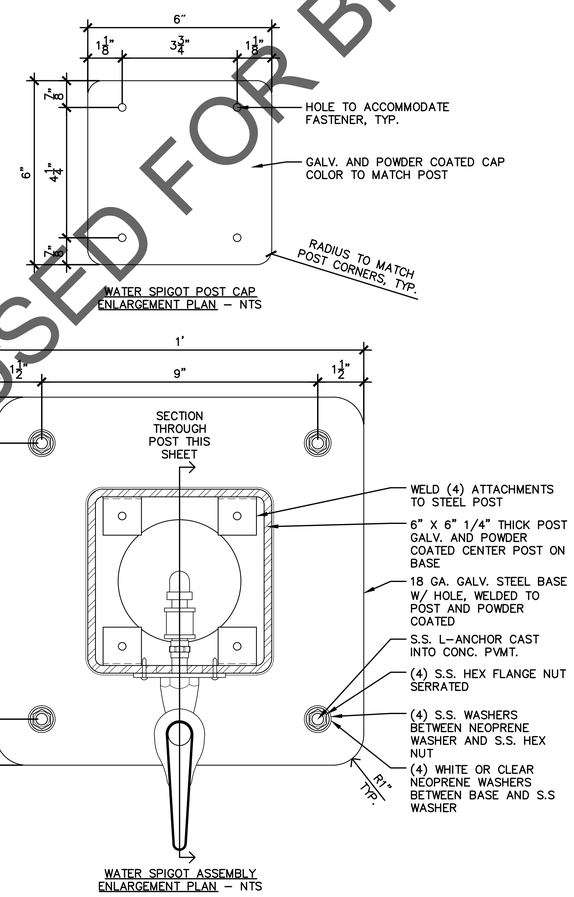

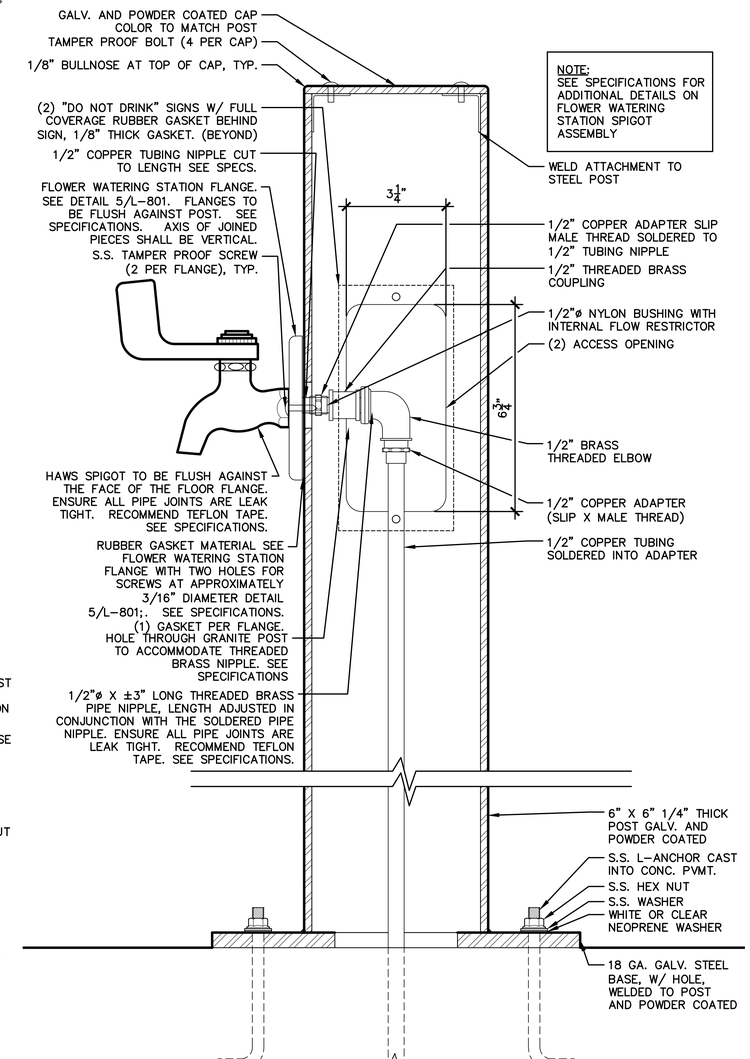

Scale: NTS

CANNOT BE USED FOR BIDDING

Revisions:	Date

CONSULTANTS:

STRUCTURAL: STEINLE CONSTRUCTION ENGINEERS, A DIVISION OF VANDEMARK & LYNCH, INC. — SCE, 4305 MILLER ROAD, WILMINGTON, DE 19802, 302-764-7635, www.steinleengineers.com

MECHANICAL/ELECTRICAL: Paragon Engineering Corporation, MECHANICAL/ELECTRICAL, 708 Philadelphia Pike, Wilmington, DE 19809, ph: 302.762.6010, fax: 302.762.0653

IRRIGATION: Aqua Engineering, Inc., Innovative Water Solutions, 4803 Innovation Drive, Fort Collins, Colorado 80525, Phone (970) 229-9668, FAX (970) 226-3855

GEOTECHNICAL: GEO-TECHNOLOGY ASSOCIATES, INC., 18 Boulden Circle, Suite 36, New Castle, DE 19720, Tel. 302-326-2100

CEMETERY DESIGN: The LA GROUP, Landscape Architecture & Engineering P.C., People. Purpose. Place., 40 Long Alley, Saratoga Springs, NY 12866, p 518-587-8100, f 518-587-0180, www.thelagroup.com

ARCHITECT/ENGINEER:

SURVEYING: VANDEMARK & LYNCH, INC., ENGINEERS – PLANNERS – SURVEYORS, 4305 MILLER ROAD, WILMINGTON, DE 19802/(302) 764-7635, WWW.VANDEMARKLYNCH.COM

U.S. DEPARTMENT OF VETERANS AFFAIRS

Drawing Title: SITE SIGNAGE AND AMENITY DETAILS

Approved: Project Director

Project Title: DELAWARE VETERANS MEMORIAL CEMETERY

Location: MILLSBORO, DELAWARE

Date: 05/02/2016 | Checked: DLM | Drawn: JEB

Project Number: DE-13-21

Building Number:

Drawing Number: CI501

Dwg 18 of 28

State of Delaware — Division of Facilities Management

VA FORM 08-6231, OCT 1978

BID SET DOCUMENTS

Printed By: DLAGREELI, MEGAN
Save Date: 4/29/2016 11:05 AM
File Name: G:\PROJ\DE\DE13011_Delaware_Veterans_Cemetery_MB\dwg\CI501\CI501_AMENITY_DETAILS.dwg

CANNOT BE USED FOR BIDDING

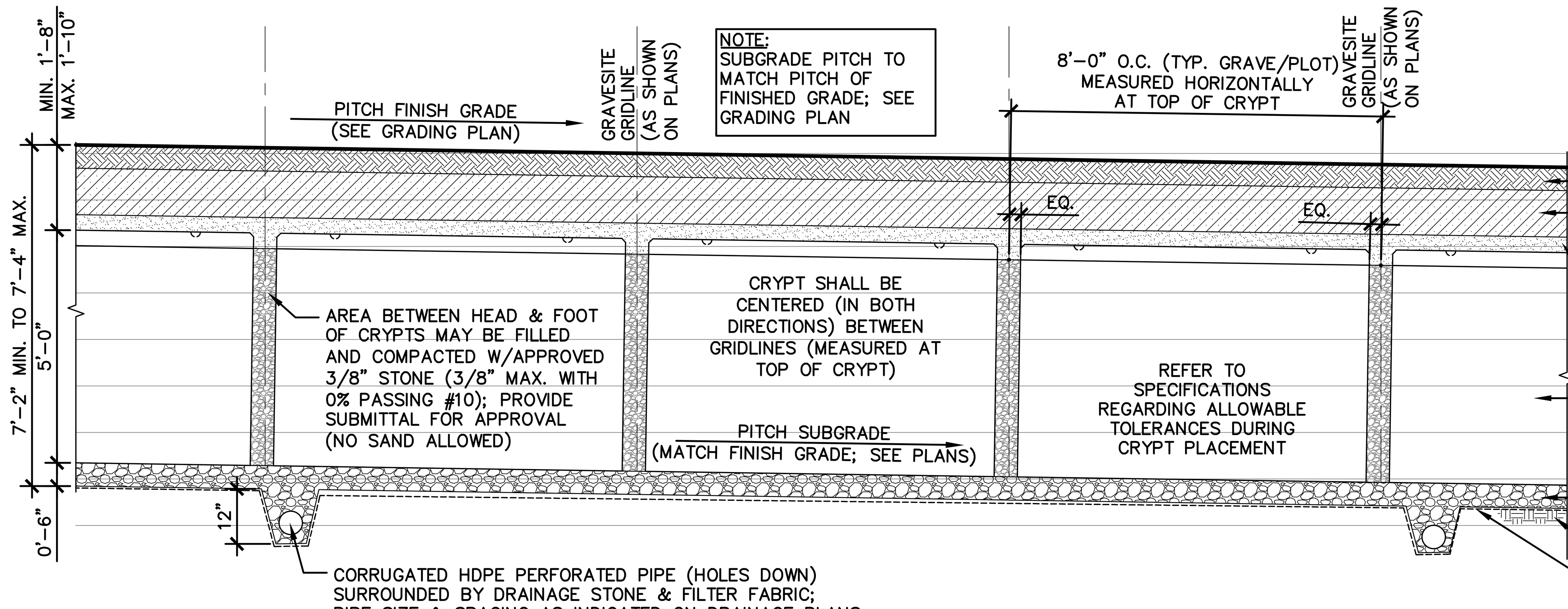

SIDE VIEW

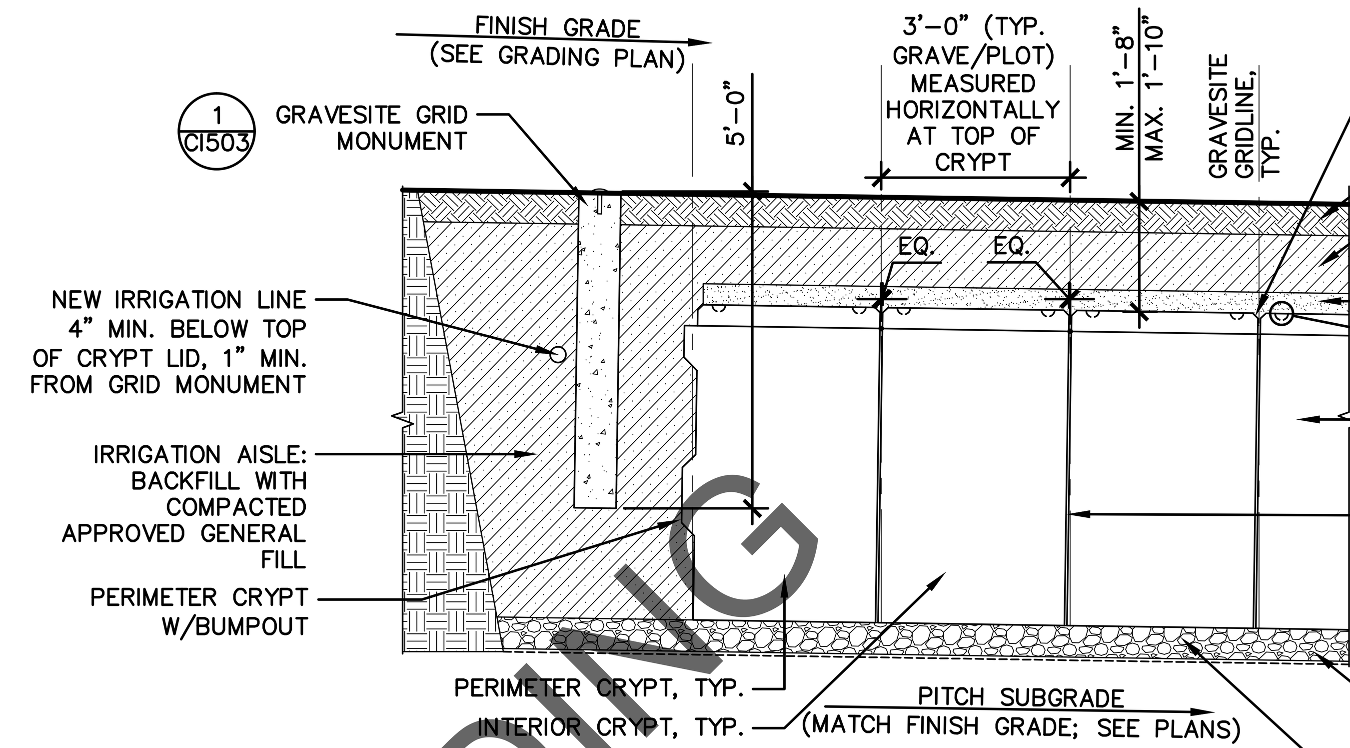

END VIEW

CRYPT/MONUMENT LAYOUT GENERAL NOTE:
1. NO VEHICLE OR EQUIPMENT THAT CREATES A LOAD CONDITION GREATER THAN THAT OF A SINGLE AXLE LOAD OF 12,000 LBS. SHALL BE ALLOWED ON CRYPTS (SEE SPECIFICATIONS).
2. CONTRACTOR TO COORDINATE CLEANOUT LOCATION W/ GRADING AND DRAINAGE PLANS.
3. SPECIFICATIONS GOVERN. STONE BETWEEN HEAD AND FOOT OF CRYPTS MAY BE THE DRAINAGE STONE FROM BENEATH THE CRYPTS. REFER TO SPECIFICATIONS FOR DETAILS.
4. VARIATION IN SLOPE (FINISH GRADE AND SUBGRADE) DOES NOT OCCUR IN A SINGLE CRYPT FIELD. THE VARIATION IS BETWEEN ONE FIELD AND ANOTHER. FOLLOW THE GRADING PLAN FOR EACH BURIAL SECTION.
5. LAYOUT OF DOUBLE-DEPTH CRYPTS SHALL BE BASED UPON THE LOCATIONAL DATA PROVIDED FOR THE GRAVESITE MONUMENTS. REFER TO PLAN VIEW BELOW FOR ADDITIONAL CRYPT LAYOUT INFORMATION. THE ACTUAL PLACEMENT OF THE GRAVESITE MONUMENTS SHALL OCCUR AFTER THE PLACEMENT OF ALL CRYPTS. TO ENSURE ACCURATE MONUMENT PLACEMENT, CONTRACTOR SHALL HAND-EXCAVATE SUFFICIENT MATERIAL (IN THE PROXIMITY OF EACH MONUMENT) TO EXPOSE THE CRYPT LIDS. REPLACE ALL EXCAVATED MATERIAL AFTER PLACEMENT OF MONUMENTS. MONUMENT PLACEMENT MUST BE BASED UPON THE ACTUAL INSTALLED CRYPT LOCATIONS; ANY DEVIATIONS (FROM THE PLANS) MUST BE RECORDED ON THE AS-BUILT DRAWINGS; PROVIDE SURVEY CERTIFICATION OF CRYPT PLACEMENT (SEE SPECS.) PRIOR TO BACKFILL BEING PLACED BETWEEN CRYPTS. REFER TO SPECS FOR DETAILS FOR "AS-BUILT" DRAWINGS.
6. MAINTAINING DEPTH OF COVER OVER ALL CRYPT LIDS IS CRITICAL; CONTRACTOR SHALL PROVIDE THE MEANS AND METHODS TO VERIFY DEPTH OF COVER; DEFICIENCIES IN DEPTH (OR EXCESSES) SHALL BE REMEDIED PRIOR TO ACCEPTANCE OF CRYPT INSTALLATION. SEE SPECIFICATIONS.
7. CONTRACTOR IS TO PROVIDE THE NCA STANDARD LIFTING DEVICE FOR CRYPT LID REMOVAL.

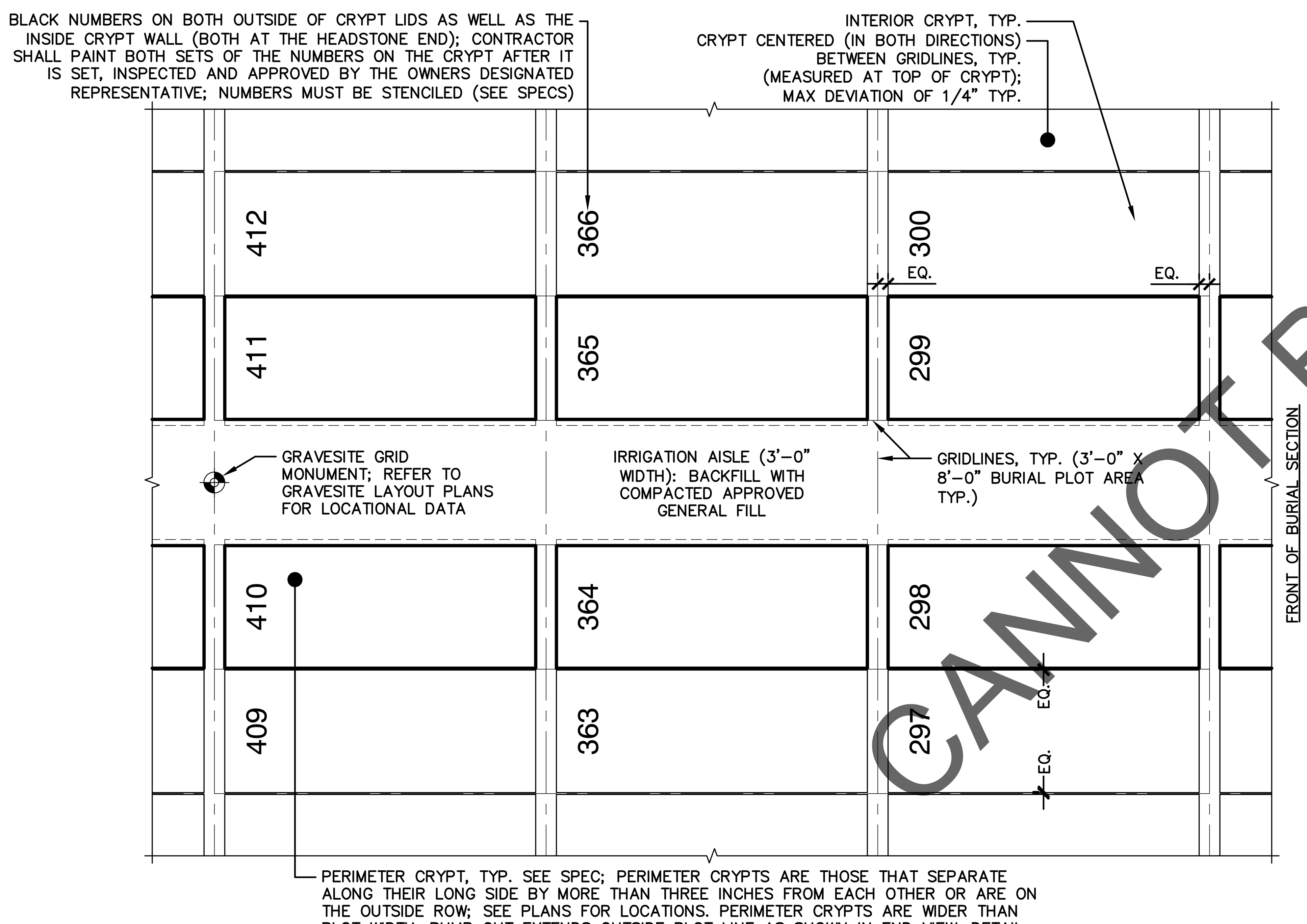

PLAN VIEW

1 DOUBLE DEPTH LAWN CRYPT INSTALLATION

Scale: NTS

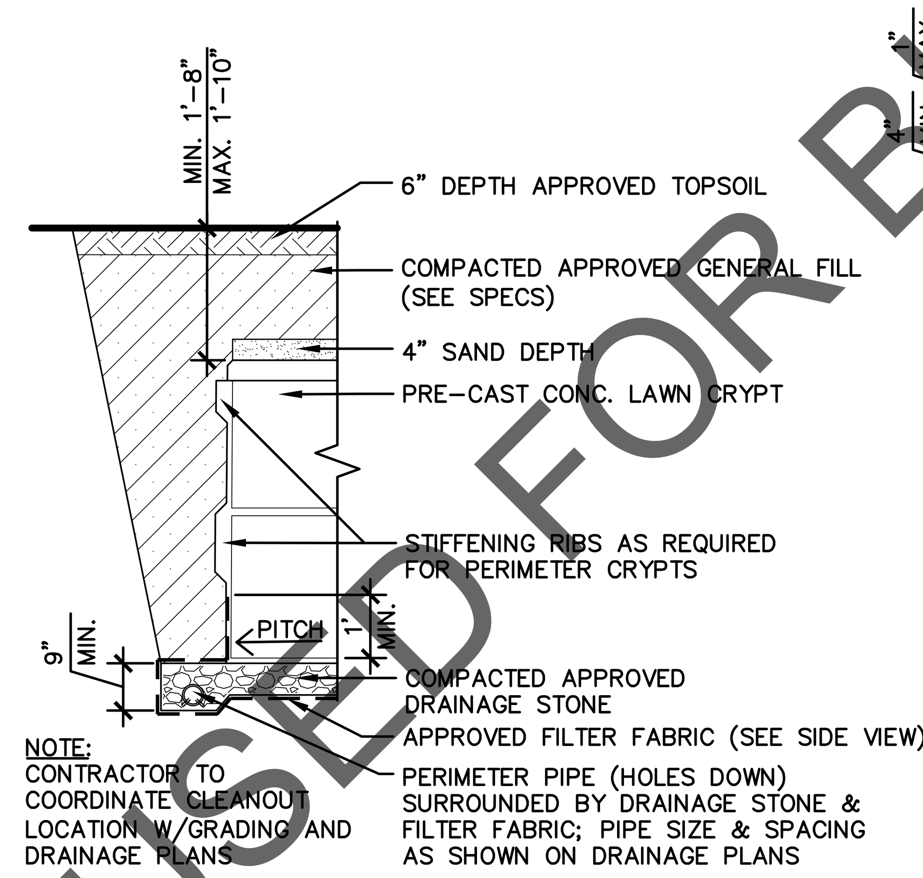

2 CRYPT PERIMETER UNDERDRAIN

Scale: NTS

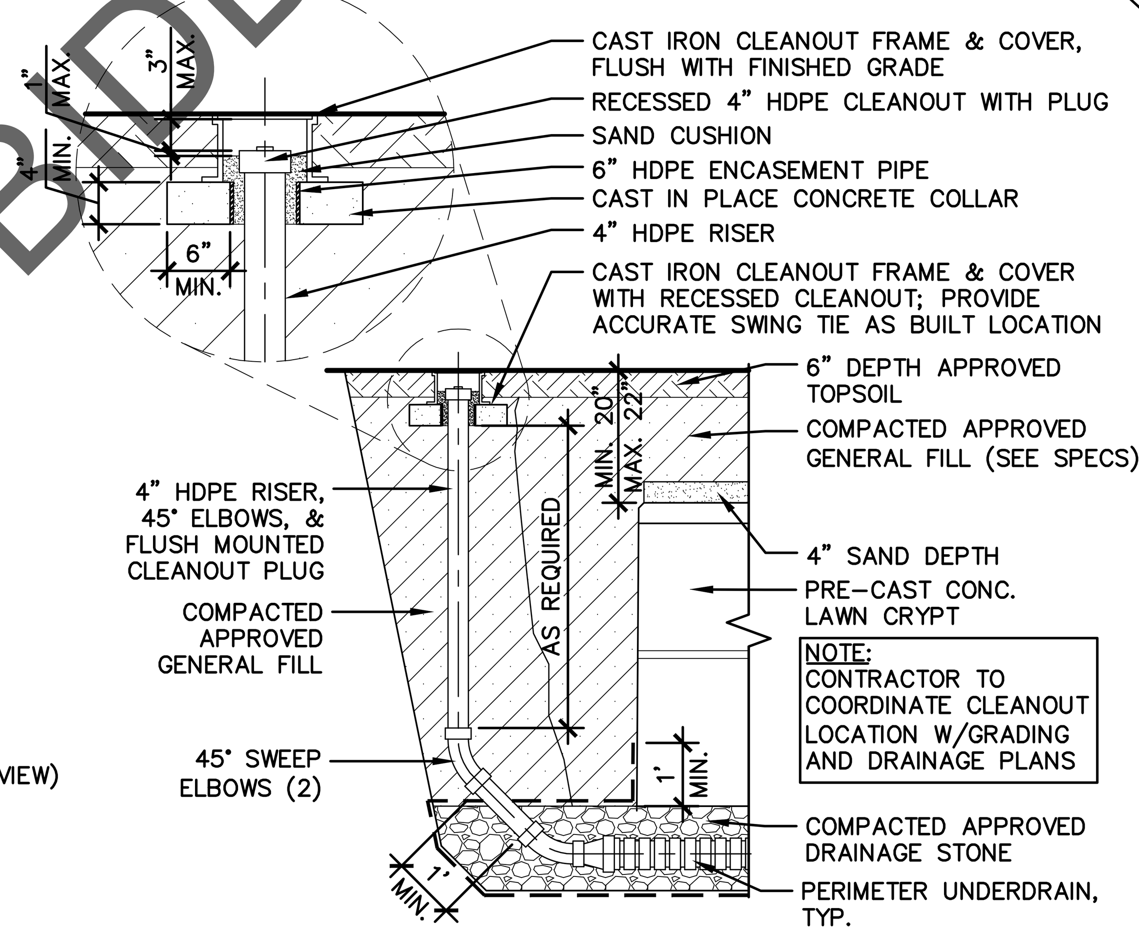

3 CRYPT UNDERDRAIN CLEAN OUT

Scale: NTS

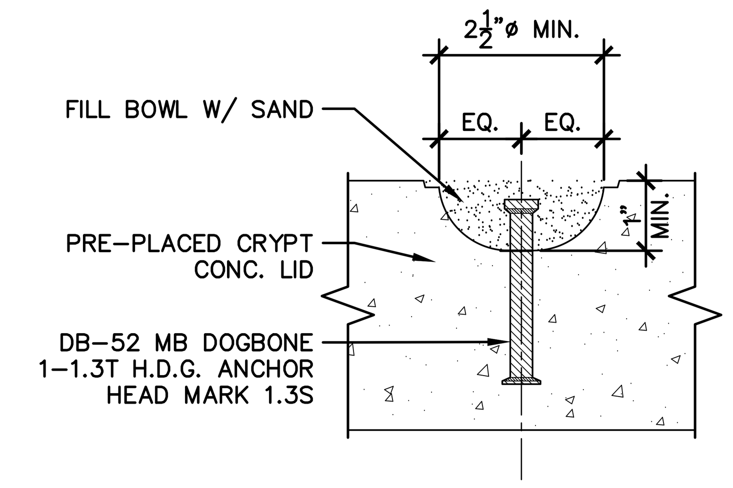

LIFTING LUG DETAIL

4 LIFTING LUG DETAIL

Scale: NTS

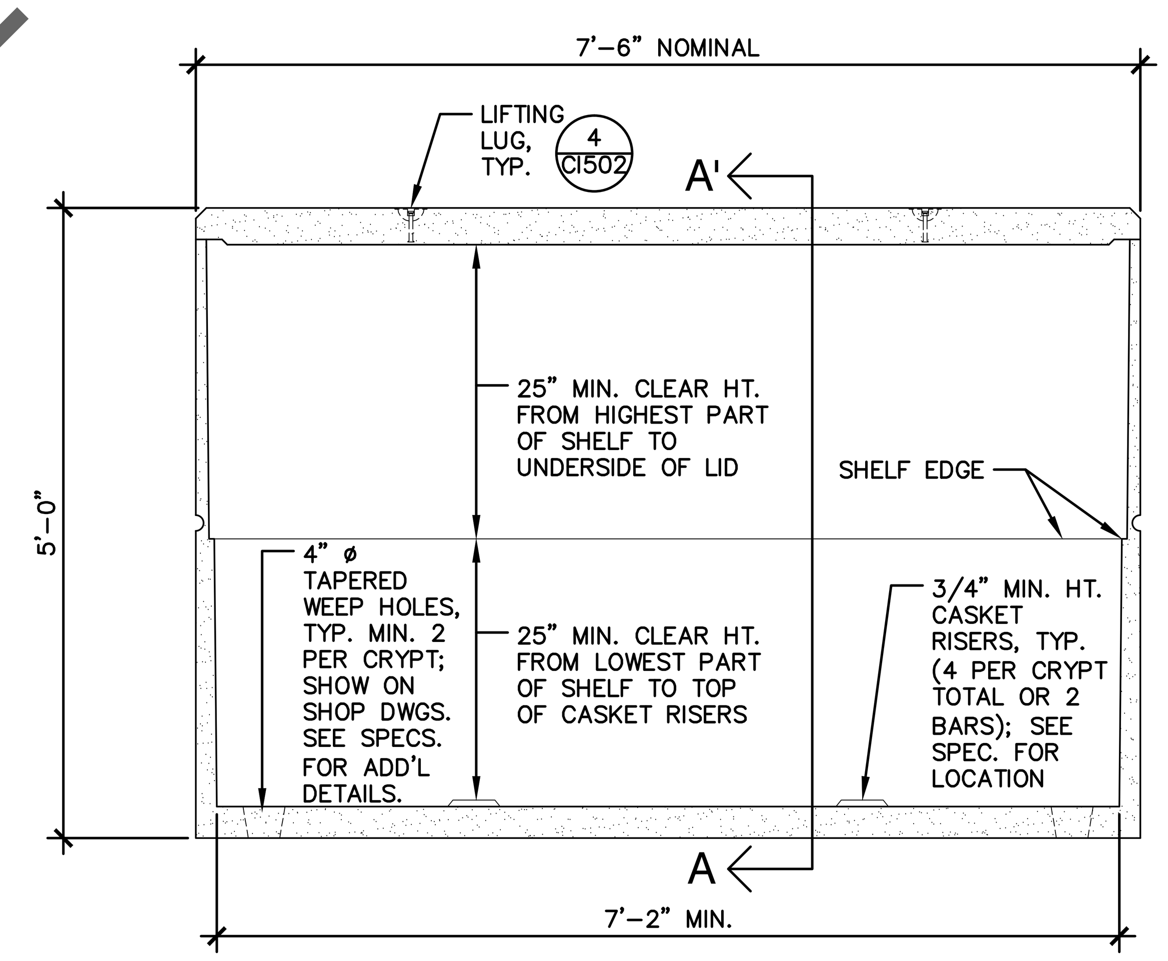

SIDE ELEVATION

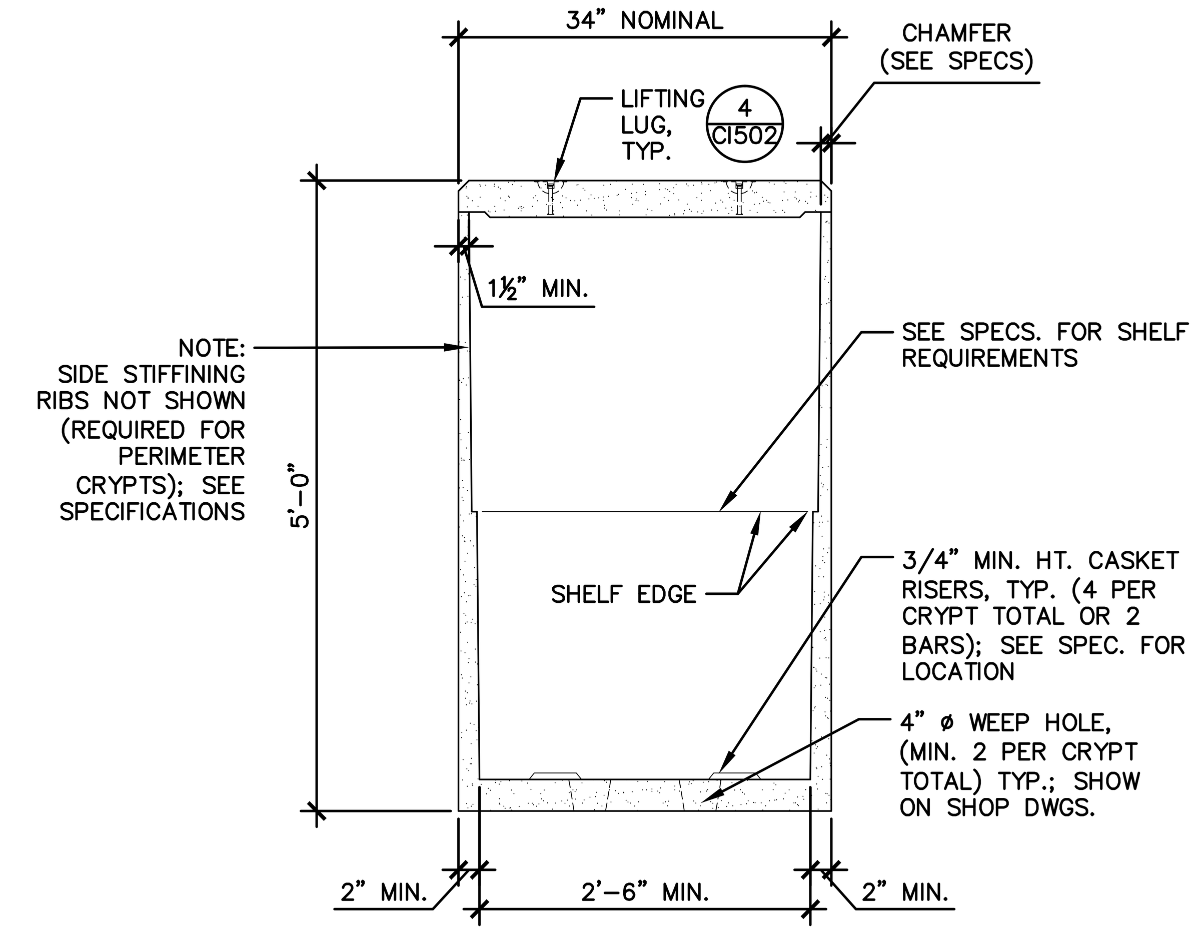

SECTION A-A'

5 GENERIC DOUBLE-DEPTH LAWN CRYPT VAULT (STANDARD) CONFIGURATION DETAIL

Scale: NTS

Revisions:	Date

CONSULTANTS:

STRUCTURAL
STEINLE CONSTRUCTION ENGINEERS
A DIVISION OF VANDEMARK & LYNCH, INC.
SCE
4305 MILLER ROAD
WILMINGTON, DE 19802, 302-764-7635
www.steinleengineers.com

MECHANICAL/ELECTRICAL
PARAGON ENGINEERING CORPORATION
MECHANICAL/ELECTRICAL
708 Philadelphia Pike
Wilmington, DE 19809
ph: 302.762.6010
fax: 302.762.0653

IRRIGATION
Aqua Engineering, Inc.
Innovative Water Solutions
4803 Innovation Drive
Fort Collins, Colorado 80525
Phone (970) 229-9668
FAX (970) 226-3855

GEOTECHNICAL
GEO-TECHNOLOGY ASSOCIATES, INC.
18 Boulden Circle, Suite 36
New Castle, DE 19720
Tel: 302-326-2100

CEMETERY DESIGN
The LA GROUP
Landscape Architecture & Engineering P.C.
People. Purpose. Place.
40 Long Alley
Saratoga Springs
NY 12866
p: 518-587-8100
f: 518-587-0180
www.thelagroup.com

ARCHITECT/ENGINEER:

SURVEYING
VANDEMARK & LYNCH, INC.
ENGINEERS – PLANNERS – SURVEYORS
4305 MILLER ROAD
WILMINGTON, DE 19802/(302) 764-7635
WWW.VANDEMARKLYNCH.COM

STEPHEN L. JOHNS
REGISTERED
NO. 5976
DELAWARE
PROFESSIONAL ENGINEER
5/2/16

DEPARTMENT OF VETERANS AFFAIRS · UNITED STATES OF AMERICA
U.S. DEPARTMENT OF VETERANS AFFAIRS

Drawing Title	Project Title	Project Number	State of Delaware
GRAVESITE DETAILS	DELAWARE VETERANS MEMORIAL CEMETERY	DE-13-21	
		Building Number	
Approved: Project Director	Location: MILLSBORO, DELAWARE	Drawing Number: CI502	GREAT SEAL OF THE STATE OF DELAWARE · 1704 · 1776 · 1787
	Date: 05/02/2016 · Checked: DLM · Drawn: JDB	Dwg 19 of 28	Division of Facilities Management

VA FORM 08-6231, OCT 1978

BID SET DOCUMENTS

Plotted By: DARRELL MEEHL
Save Date: 4/15/2016 9:45 AM
File Name: G:\Proj-2016\2016013_Delaware_Veterans_Cemetery_Millsboro\2016013CAD\CI502_PRE-PLACED_CRYPTS.dwg

NOTE:
ALL LAWNS WITHIN THE BURIAL SECTIONS SHALL BE INSTALLED AND ACCEPTED PRIOR TO MONUMENT–BASE PLACEMENT; ALL LAWNS DAMAGED DURING INSTALLATION SHALL BE REPAIRED AT CONTRACTOR'S EXPENSE

NOTE:
AT THE CONTRACTOR'S OPTION, GRAVESITE GRID MONUMENTS MAY BE PROVIDED AS PRECAST UNITS. PROVIDE SHOP DRAWINGS AND METHOD OF INSTALLATION FOR APPROVAL

NOTE:
FINISH GRADE IS TOP OF TOPSOIL

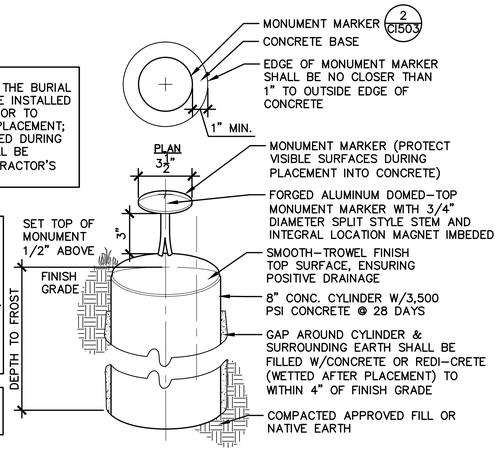

1 GRAVESITE GRID MONUMENT

Scale: NTS

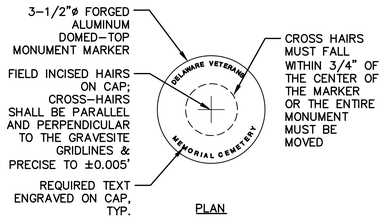

2 MONUMENT MARKER

Scale: NTS

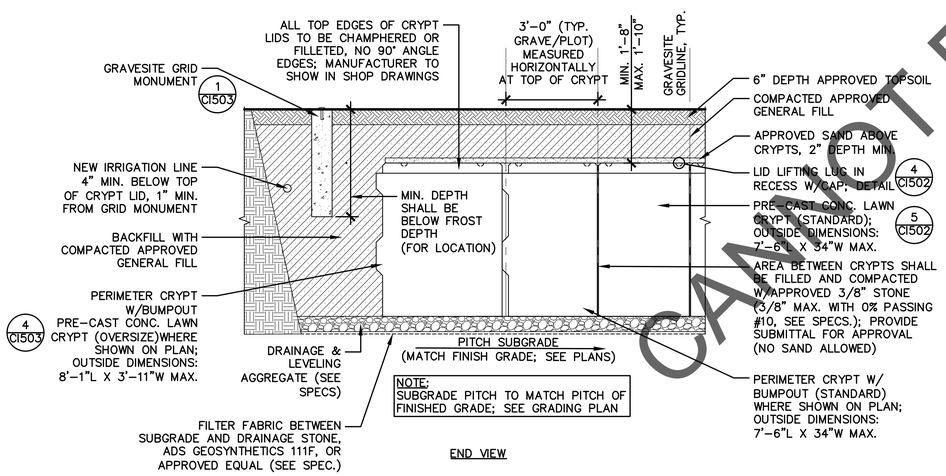

NOTE:
SUBGRADE PITCH TO MATCH PITCH OF FINISHED GRADE; SEE GRADING PLAN

3 OVERSIZED DOUBLE-DEPTH LAWN CRYPT INSTALLATION - END VIEW

Scale: NTS

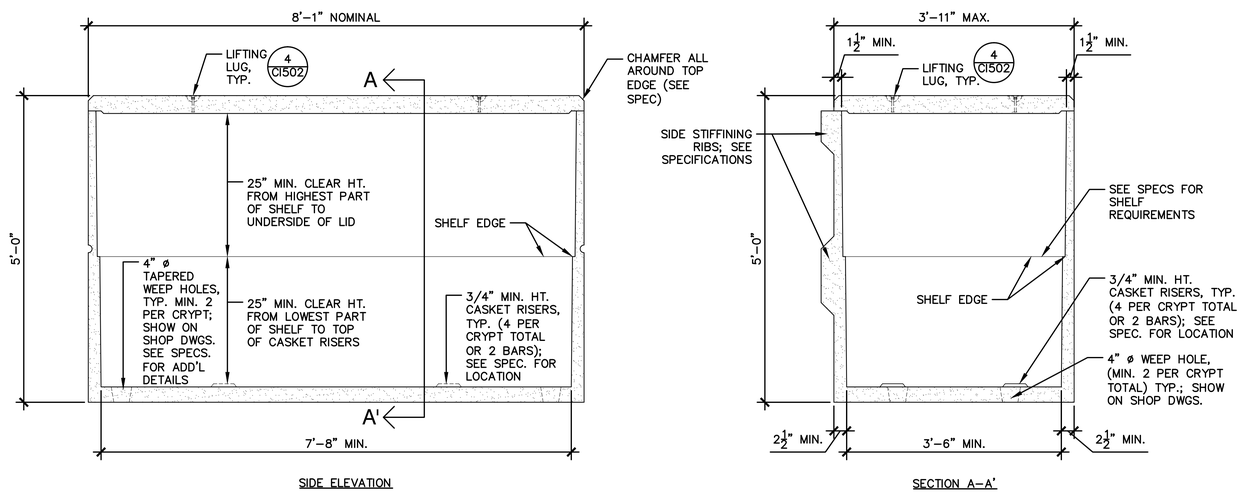

4 GENERIC DOUBLE-DEPTH LAWN CRYPT VAULT (OVERSIZED) CONFIGURATION DETAIL

Scale: NTS

CANNOT BE USED FOR BIDDING

Revisions:	Date

CONSULTANTS:

STRUCTURAL: STEINLE CONSTRUCTION ENGINEERS, A DIVISION OF VANDEMARK & LYNCH, INC. — SCE — 4305 MILLER ROAD, WILMINGTON, DE 19802, 302-764-7635, www.steinleengineers.com

MECHANICAL/ELECTRICAL: PARAGON ENGINEERING CORPORATION — 708 Philadelphia Pike, Wilmington, DE 19809, ph: 302.762.6010, fax: 302.762.0653

IRRIGATION: Aqua Engineering, Inc. — Innovative Water Solutions, 4803 Innovation Drive, Fort Collins, Colorado 80525, Phone (970) 229-9668, FAX (970) 229-3855

GEOTECHNICAL: GTA — GEO-TECHNOLOGY ASSOCIATES, INC., 18 Boulden Circle, Suite 36, New Castle, DE 19720, Tel. 302-326-2100

CEMETERY DESIGN: The LA GROUP, Landscape Architecture & Engineering P.C., People. Purpose. Place., 40 Long Alley, Saratoga Springs, NY 12866, p 518-587-8100, f 518-587-0180, www.thelagroup.com

ARCHITECT/ENGINEER:

SURVEYING: VANDEMARK & LYNCH, INC. — ENGINEERS – PLANNERS – SURVEYORS, 4305 MILLER ROAD, WILMINGTON, DE 19802/(302) 764–7635, WWW.VANDEMARKLYNCH.COM

STEPHEN P. LYNCH, No. 5056, DELAWARE, PROFESSIONAL ENGINEER

U.S. DEPARTMENT OF VETERANS AFFAIRS

Drawing Title: GRAVESITE DETAILS

Approved: Project Director

Project Title: DELAWARE VETERANS MEMORIAL CEMETERY

Location: MILLSBORO, DELAWARE

Date: 05/02/2016 | Checked: DLM | Drawn: JDB

Project Number: DE–13–21

Building Number:

Drawing Number: CI503

Dwg 20 of 28

State of Delaware — Division of Facilities Management

VA FORM 08–6231, OCT 1978

BID SET DOCUMENTS

Printed By: DJARRELL MEGAL
Save Date: 6/29/2016 11:13 AM
File Name: G:\PROJ\DE\DE13_Delaware_Veterans_Cemetery_Millsboro\02100\SCHEMATIC_PRE-PLACED_CP\PTS.dwg

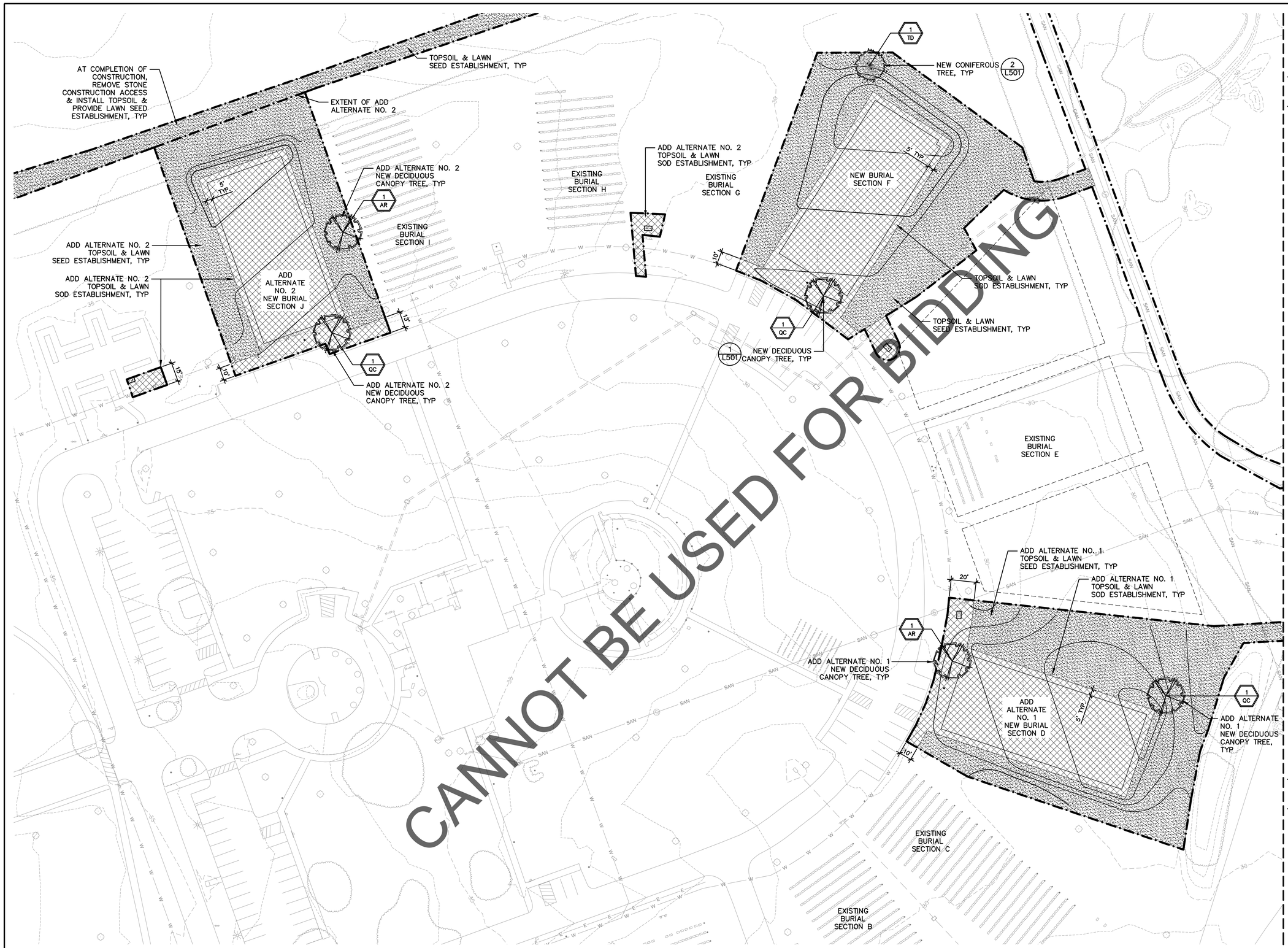

CANNOT BE USED FOR BIDDING

LEGEND

- LIMITS OF CONSTRUCTION
- TOPSOIL & LAWN SOD ESTABLISHMENT
- TOPSOIL & LAWN SEED ESTABLISHMENT
- NEW DECIDUOUS CANOPY TREE, TYP
- NEW CONIFEROUS TREE, TYP
- 1 AR — QTY. / SPECIES — PLANT CALLOUT
- EXISTING TREE, TYP
- EXISTING TREELINE, TYP

NOTE:
SEE PLANTING SCHEDULE ON DRAWING L-501

GRAPHIC SCALE
30 0 15 30 60
1 inch = 30 feet

NORTH

Revisions:	Date

CONSULTANTS:

STRUCTURAL
STEINLE CONSTRUCTION ENGINEERS
A DIVISION OF VANDEMARK & LYNCH, INC.
SCE
4305 MILLER ROAD
WILMINGTON, DE 19802. 302-764-7635
www.steinleengineers.com

MECHANICAL/ELECTRICAL
PEC PARAGON ENGINEERING CORPORATION
MECHANICAL/ELECTRICAL
708 Philadelphia Pike
Wilmington, DE 19809
ph: 302.762.6010
fax: 302.762.0653

IRRIGATION
Aqua Engineering, Inc.
Innovative Water Solutions
4803 Innovation Drive
Fort Collins, Colorado 80525
Phone (970) 229-9668
FAX (970) 226-3855

GEOTECHNICAL
GTA
GEO-TECHNOLOGY ASSOCIATES, INC.
18 Boulden Circle, Suite 36
New Castle, DE 19720
Tel: 302-326-2100

CEMETERY DESIGN
The LA GROUP
Landscape Architecture & Engineering P.C.
People. Purpose. Vision.
40 Long Alley
Saratoga Springs
NY 12866
p 518-587-8100
f 518-587-0880
www.lagroup.com

ARCHITECT/ENGINEER:

SURVEYING
VANDEMARK & LYNCH, INC.
ENGINEERS – PLANNERS – SURVEYORS
4305 MILLER ROAD
WILMINGTON, DE 19802/(302) 764-7635
WWW.VANDEMARKLYNCH.COM

MARK A. RUSSO No. 280 — STATE OF DELAWARE — REGISTERED LANDSCAPE ARCHITECT
5-02-16

U.S. DEPARTMENT OF VETERANS AFFAIRS

Drawing Title: PLANTING PLAN (AREA 1)

Approved: Project Director

Project Title: DELAWARE VETERANS MEMORIAL CEMETERY

Location: MILLSBORO, DELAWARE

Date: 05/02/2016 | Checked: DLM | Drawn: JDB

Project Number: DE-13-21

Building Number:

Drawing Number: L-101

Dwg 21 of 28

State of Delaware
Division of Facilities Management

VA FORM 08-6231, OCT 1978

BID SET DOCUMENTS

Plotted By: SAMMIS, METHA
Plot Date: 4/29/2016 10:20 AM
Drawing: C:\PROJECTS\DE\DE11_Delaware_Veterans_Cemetery_MillsboroV2015\ACAD\L-101-102_PLANTING.dwg
File Name: DE11_Delaware_Veterans_Cemetery_MillsboroV2015

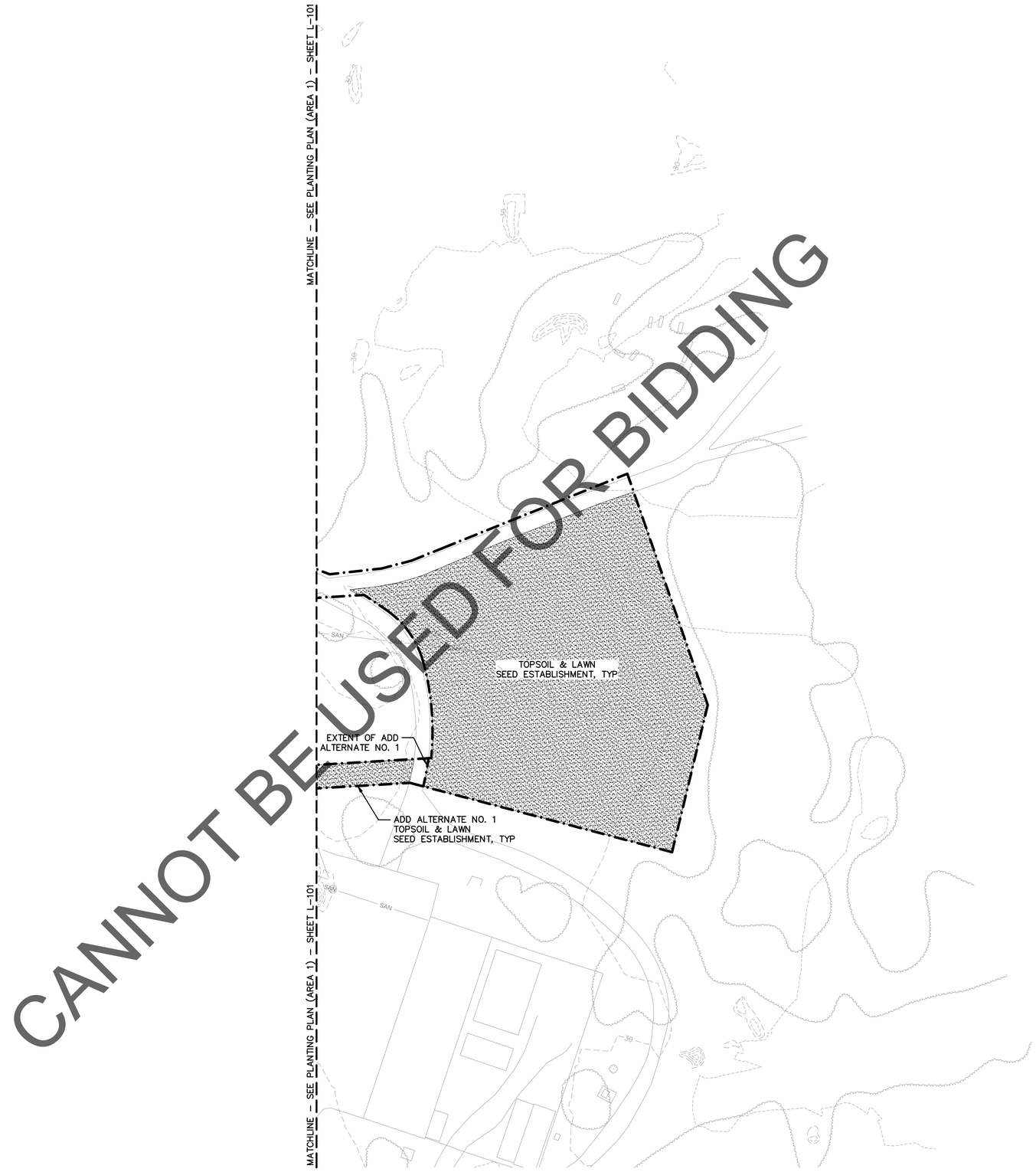

CANNOT BE USED FOR BIDDING

LEGEND

- LIMITS OF CONSTRUCTION
- TOPSOIL & LAWN SOD ESTABLISHMENT
- TOPSOIL & LAWN SEED ESTABLISHMENT
- NEW DECIDUOUS CANOPY TREE, TYP
- NEW CONIFEROUS TREE, TYP
- 1 QTY. / AR SPECIES — PLANT CALLOUT
- EXISTING TREE, TYP
- EXISTING TREELINE, TYP

NOTE:
SEE PLANTING SCHEDULE ON DRAWING L-103

GRAPHIC SCALE
30 0 15 30 60
1 inch = 30 feet

NORTH

Revisions:	Date

CONSULTANTS:

STRUCTURAL
STEINLE CONSTRUCTION ENGINEERS
A DIVISION OF VANDEMARK & LYNCH, INC.
SCE
4305 MILLER ROAD
WILMINGTON, DE 19802, 302-764-7635
www.steinleengineers.com

MECHANICAL/ELECTRICAL
PEC PARAGON ENGINEERING CORPORATION
MECHANICAL/ELECTRICAL
708 Philadelphia Pike
Wilmington, DE 19809
ph: 302.762.6010
fax: 302.762.0653

IRRIGATION
Aqua Engineering, Inc.
Innovative Water Solutions
4803 Innovation Drive
Fort Collins, Colorado 80525
Phone (970) 229-9668
FAX (970) 226-3855

GEOTECHNICAL
GTA
GEO-TECHNOLOGY ASSOCIATES, INC.
18 Boulden Circle, Suite 36
New Castle, DE 19720
Tel: 302-326-2100

CEMETERY DESIGN
The LA GROUP
Landscape Architecture & Engineering P.C.
People. Purpose. Place.
40 Long Alley
Saratoga Springs
NY 12866
p 518-587-8100
f 518-587-0280
www.thelagroup.com

ARCHITECT/ENGINEER:

SURVEYING
VANDEMARK & LYNCH, INC.
ENGINEERS – PLANNERS – SURVEYORS
4305 MILLER ROAD
WILMINGTON, DE 19802/(302) 764-7635
WWW.VANDEMARKLYNCH.COM

MARK A. RUSSO
No. 265
REGISTERED LANDSCAPE ARCHITECT
DELAWARE
5-02-16

U.S. DEPARTMENT OF VETERANS AFFAIRS

Drawing Title
PLANTING PLAN
(AREA 2)

Approved: Project Director

Project Title
DELAWARE VETERANS MEMORIAL CEMETERY

Location
MILLSBORO, DELAWARE

Date 05/02/2016 | Checked DLM | Drawn JDB

Project Number DE-13-21

Building Number

Drawing Number
L-102
Dwg 22 of 28

State of Delaware
Division of Facilities Management

VA FORM 08-6231, OCT 1978

BID SET DOCUMENTS

Printed By: DARRELL MERIN
Saved Date: 5/2/2016 11:19 AM
File Name: P:\DE-13-21 Delaware Veterans Cemetery_Master\03SUBCADD\L101-102_PLANTING.dwg

CANNOT BE USED FOR BIDDING

PLANT SCHEDULE (BASE BID)

DECIDUOUS CANOPY TREES

KEY	QTY.	BOTANICAL NAME	COMMON NAME	PLANTING SIZE	ROOT	PLANTING NOTES
QC	1	Quercus coccinea	Scarlet Oak	3" CAL.	B&B	TREES TO BE DUG IN SPRING ONLY

CONIFEROUS TREES

KEY	QTY.	BOTANICAL NAME	COMMON NAME	PLANTING SIZE	ROOT	PLANTING NOTES
TD	1	Taxodium distichum	Bald Cypress	3" CAL.	B&B	TREES TO BE DUG IN SPRING ONLY

PLANT SCHEDULE (ADD ALTERNATE NO. 1)

DECIDUOUS CANOPY TREES

KEY	QTY.	BOTANICAL NAME	COMMON NAME	PLANTING SIZE	ROOT	PLANTING NOTES
AR	1	Acer rubrum 'October Glory'	October Glory Red Maple	3" CAL.	B&B	N/A
QC	1	Quercus coccinea	Scarlet Oak	3" CAL.	B&B	TREES TO BE DUG IN SPRING ONLY

PLANT SCHEDULE (ADD ALTERNATE NO. 2)

DECIDUOUS CANOPY TREES

KEY	QTY.	BOTANICAL NAME	COMMON NAME	PLANTING SIZE	ROOT	PLANTING NOTES
AR	1	Acer rubrum 'October Glory'	October Glory Red Maple	3" CAL.	B&B	N/A
QC	1	Quercus coccinea	Scarlet Oak	3" CAL.	B&B	TREES TO BE DUG IN SPRING ONLY

NOTES:
- TREE SHALL BEAR SAME RELATIONSHIP TO FINISH GRADE AS IN THE NURSERY.
- THIN BRANCHES & FOLIAGE AS DIRECTED WHILE RETAINING NORMAL SHAPE OF TREE. NEVER CUT A LEADER.
- TREE SHALL BE PLUMB & STRAIGHT; TREES 2-1/2" CALIPER & LARGER SHALL BE STAKED & GUYED AS SHOWN BELOW.

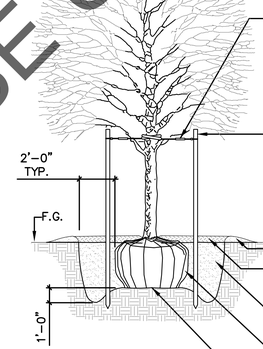

ATTACH FABRIC MATERIAL GUYING STRAPS TO STAKE. NOTCH STAKE TO RECEIVE STRAPS. ENCASE STRAPS AROUND TRUNK IN REINFORCED RUBBER HOSE ABOVE FIRST BRANCH. SECURE GUYING STRAPS WITH GALV. OR CADMIUM-PLATED TURNBUCKLES.

3" ø x 8'-0" CEDAR STAKES, 3 PER TREE. STAKES TO BE SAME HEIGHT, DRIVEN IN ON AN SLIGHT ANGLE. STAKES TO BE OUTSIDE OF ROOT BALL.

4" HT. PLANTING MIX SAUCER

3" DEPTH HARDWOOD MULCH; PULL MULCH AWAY FROM TRUNK

AMENDED PLANTING MIX, COMPACTED (SEE SPEC.)

CUT ROPE SURROUNDING BOTTOM OF TREE TRUNK AFTER BACKFILLING BUT BEFORE MULCHING. REMOVE BURLAP FROM TOP 1/3 OF BALL ROOT.

UNDISTURBED NATIVE SOIL DRAINAGE MOUND COMPACTED 92%; TRENCH AROUND PERIMETER OF MOUND TO DEPTH SHOWN.

1 DECIDUOUS TREE PLANTING DETAIL

Scale: NTS

NOTES:
- TREE SHALL BEAR SAME RELATIONSHIP TO FINISH GRADE AS IN THE NURSERY.
- NEVER CUT A LEADER.
- TREE SHALL BE PLUMB & STRAIGHT; TREES 8'-0" HT. & LARGER SHALL BE GUYED AS SHOWN BELOW.

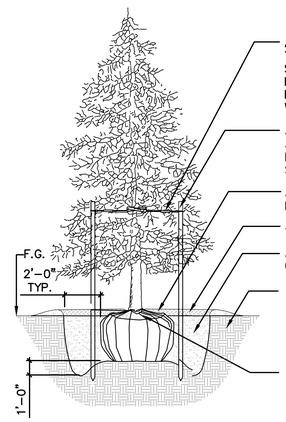

ATTACH FABRIC MATERIAL GUYING STRAPS TO STAKE. NOTCH STAKE TO RECEIVE STRAPS. ENCASE STRAPS AROUND TRUNK IN REINFORCED RUBBER HOSE ABOVE FIRST BRANCH. SECURE GUYING STRAPS WITH GALV. OR CADMIUM-PLATED TURNBUCKLES.

3" ø x 8'-0" CEDAR STAKES, 3 PER TREE. STAKES TO BE SAME HEIGHT, DRIVEN IN ON AN SLIGHT ANGLE. STAKES TO BE OUTSIDE OF ROOT BALL.

3" DEPTH HARDWOOD MULCH; PULL MULCH AWAY FROM TRUNK

4" HT. PLANTING MIX SAUCER

AMENDED PLANTING MIX, COMPACTED (SEE SPEC.)

UNDISTURBED NATIVE SOIL DRAINAGE MOUND COMPACTED 92%; TRENCH AROUND PERIMETER OF MOUND TO DEPTH SHOWN.

CUT ROPE SURROUNDING BOTTOM OF TREE TRUNK AFTER BACKFILLING BUT BEFORE MULCHING. REMOVE BURLAP FROM TOP 1/3 OF BALL ROOT.

2 CONIFEROUS TREE PLANTING DETAIL

Scale: NTS

Revisions: Date

CONSULTANTS:

STRUCTURAL
STEINLE CONSTRUCTION ENGINEERS
A DIVISION OF VANDEMARK & LYNCH, INC.
SCE
4305 MILLER ROAD
WILMINGTON, DE 19802, 302-764-7635
www.steinleengineers.com

MECHANICAL/ELECTRICAL
PEC Paragon Engineering Corporation
MECHANICAL/ELECTRICAL
708 Philadelphia Pike
Wilmington, DE 19809
ph: 302.762.6010
fax: 302.762.0653

IRRIGATION
Aqua Engineering, Inc.
Innovative Water Solutions
4803 Innovation Drive
Fort Collins, Colorado 80525
Phone (970) 229-9668
FAX (970) 229-3865

GEOTECHNICAL
GTA
GEO-TECHNOLOGY ASSOCIATES, INC.
18 Boulden Circle, Suite 36
New Castle, DE 19720
Tel: 302-326-2100

CEMETERY DESIGN
The LA GROUP
Landscape Architecture & Engineering P.C.
People. Purpose. Place.
40 Long Alley
Saratoga Springs
NY 12866
p 518-587-8100
f 518-587-0380
www.thelagroup.com

ARCHITECT/ENGINEER:
SURVEYING
VANDEMARK & LYNCH, INC.
ENGINEERS – PLANNERS – SURVEYORS
4305 MILLER ROAD
WILMINGTON, DE 19802/(302) 764-7635
WWW.VANDEMARKLYNCH.COM

MARK A. RUSSO No. 280 REGISTERED LANDSCAPE ARCHITECT
5-02-16

U.S. DEPARTMENT OF VETERANS AFFAIRS

Drawing Title: PLANTING LIST & DETAILS

Approved: Project Director

Project Title: DELAWARE VETERANS MEMORIAL CEMETERY

Location: MILLSBORO, DELAWARE

Date: 05/02/2016 | Checked: DLM | Drawn: JEB

Project Number: DE-13-21

Building Number

Drawing Number: L-501

Dwg 23 of 28

State of Delaware
Division of Facilities Management

VA FORM 08-6231, OCT 1978

BID SET DOCUMENTS

Plotted By: DARRELL MEEHL
Save Date: 4/29/2016 11:24 AM
File Name: G:\Projects\2013\DE13_Delaware_Veterans_Cemetery_Millsboro\2013DC04-SD_PLANTING_DETAILS.dwg

IRRIGATION SYSTEM DESIGN APPROACH

THE EXISTING IRRIGATION SYSTEM WILL BE MODIFIED TO PROVIDE NEW MAINLINE ROUTING AND AUTOMATED IRRIGATION FOR THE PROPOSED PRE PLACED CRYPT BURIAL AREAS. NEW SUB-MAIN PIPE VALVES AND SPRINKLERS WILL BE INSTALLED TO IRRIGATE THE NEW AREAS. EXISTING MAINLINE PIPE, CONTROL WIRE, MAINLINE AND MAINLINE VALVES WILL BE LEFT IN PLACE AND PROTECTED DURING CONSTRUCTION.

THE POINTS-OF-CONNECTION ARE THE EXISTING IRRIGATION MAINLINE PIPE.

EXISTING IRRIGATION CONTROLLER WITH EXISTING CONTROL WIRES WILL BE USED.

ALL NEW IRRIGATION EQUIPMENT MUST MATCH EXISTING EQUIPMENT.

SPRINKLERS AND VALVES REMOVED WILL NOT BE REUSED BUT WILL BE SALVAGED AND TURNED OVER TO THE CO/COR.

GENERAL NOTES

1. THE SYSTEM DESIGN ASSUMES A MINIMUM DYNAMIC PRESSURE FOR THE IRRIGATION SYSTEM OF 75 PSI AND A FLOW OF 200 GPM AT THE EXISTING 4-INCH MAINLINE PIPE. CONTRACTOR TO VERIFY EXISTING PRESSURE AND FLOW AT EACH POINT-OF-CONNECTION, REPORT ANY DISCREPANCIES TO CO/COR PRIOR TO CONSTRUCTION.
2. READ THOROUGHLY AND BECOME FAMILIAR WITH THE SPECIFICATIONS AND INSTALLATION DETAILS FOR THIS AND RELATED WORK PRIOR TO CONSTRUCTION. CONFIRM EXACT LIMITS OF IRRIGATED AREA AND ALL EXISTING AND FUTURE HARDSCAPE AND BURIAL AREAS PRIOR TO CONSTRUCTION.
3. COORDINATE UTILITY LOCATES (CALL BEFORE YOU DIG) OF UNDERGROUND UTILITIES PRIOR TO CONSTRUCTION. CONTRACTOR RESPONSIBLE FOR LOCATING ALL UNDERGROUND UTILITIES AND CONDITIONS BEFORE EXCAVATING.
4. DO NOT PROCEED WITH THE INSTALLATION OF THE IRRIGATION SYSTEM WHEN IT IS OBVIOUS IN THE FIELD THAT OBSTRUCTIONS OR GRADE DIFFERENCES EXIST THAT MIGHT NOT HAVE BEEN CONSIDERED IN THE ENGINEERING, OR IF DISCREPANCIES IN CONSTRUCTION DETAILS, LEGEND, NOTES, OR SPECIFICATIONS ARE DISCOVERED. BRING ALL SUCH OBSTRUCTIONS OR DISCREPANCIES TO THE ATTENTION OF THE COR.
5. THE DRAWINGS ARE DIAGRAMMATIC. THEREFORE, THE FOLLOWING SHOULD BE NOTED:
   - A. IRRIGATION COMPONENTS MAY BE SHOWN OUTSIDE PLANTING AREAS FOR CLARITY.
   - B. AVOID CONFLICTS BETWEEN THE IRRIGATION SYSTEM, PLANTING MATERIALS, ARCHITECTURAL FEATURES, STORM DRAINS, AND SIGNS.
   - C. INSTALL IRRIGATION PIPE AND WIRING IN LANDSCAPED AREAS WHENEVER POSSIBLE.
6. SELECT NOZZLES FOR ROTARY SPRINKLERS WHICH PROVIDE COMPLETE AND ADEQUATE COVERAGE IF SITE CONDITIONS ARE NOT AS SHOWN. CAREFULLY ADJUST THE RADIUS OF THROW AND ARC OF EACH ROTARY SPRINKLER TO PROVIDE THE BEST PERFORMANCE AND MINIMIZE OVERSPRAY.
7. WITH REGARD TO PIPE SIZING, THE FOLLOWING SHOULD BE NOTED:

   IF A SECTION OF UNSIZED PIPE IS LOCATED BETWEEN TWO IDENTICALLY SIZED SECTIONS, THE UNSIZED PIPE IS THE SAME NOMINAL SIZE AS THE TWO SIZED SECTIONS. THE UNSIZED PIPE SHOULD NOT BE CONFUSED WITH THE DEFAULT PIPE SIZE NOTED IN THE LEGEND.

9. CONTRACTOR IS RESPONSIBLE FOR FINAL VALVE BOX AND SPRINKLER ELEVATION IN RELATION TO THE SURROUNDING FINAL GRADE.
10. CONTRACTOR IS RESPONSIBLE FOR PROTECTING EXISTING IRRIGATION EQUIPMENT. ANY EXISTING IRRIGATION EQUIPMENT INCLUDING VALVES, WIRES, PIPES AND FITTINGS THAT ARE DISTURBED DURING CONSTRUCTION WILL BE REPLACED AT THE CONTRACTORS EXPENSE WITH MATCHING EQUIPMENT. PRIOR TO CONSTRUCTION LOCATE THE EXISTING IRRIGATION EQUIPMENT AND PIPE IN THE CONSTRUCTION AREA AND MARK WITH THE CO/COR.

DEMOLITION FLAG NOTES

D1 VERIFY OPERATION OF ALL DECODER SOLENOIDS SPRINKLERS IN THIS AREA PRIOR TO DEMOLITION OR CONSTRUCTION TO VERIFY CONTROL WIRE INTEGRITY. EXCAVATE AND EXPOSE EXISTING SPRINKLERS, REMOTE CONTROL VALVE ASSEMBLIES, AND VALVE BOXES WITHIN DEMOLITION BOUNDARY INDICATED. REMOVE ASSEMBLIES AND TURN OVER TO COR. VERIFY WHICH IRRIGATION CONTROLLER OPERATES THE REMOTE CONTROL VALVES AND PROTECT WIRING FOR FUTURE USE. REPAIR ANY EXISTING IRRIGATION SYSTEM COMPONENT DAMAGED BY THE NEW CONSTRUCTION.

D2 EXCAVATE AND EXPOSE EXISTING SUB MAIN PIPE AT APPROXIMATE LOCATION INDICATED. CUT LATERAL PIPE AND CAP USING A PVC SCH 40 SOLVENT WELD CAP. BACKFILL HOLES AND COMPACT TO MATCH EXISTING CONDITIONS. MARK LOCATION WITH 6-INCH ROUND VALVE BOX. LEAVE 3-FOOT COIL OF EXISTING TWO WIRE CONTROL PATH IN 10-INCH ROUND BOX FOR SPLICE DURING CONSTRUCTION PHASE.

D3 EXCAVATE AND EXPOSE EXISTING SPRINKLER ASSEMBLY AT APPROXIMATE LOCATION SHOWN. REMOVE SPRINKLER ASSEMBLY INCLUDING SWING JOINT AND TURN OVER TO COR. IF SPRINKLER IS WITHIN THE SPRINKLER DEMOLITION BOUNDARY, PIPE IS TO BE ABANDONED IN PLACE. BACKFILL HOLES AND COMPACT TO EXISTING CONDITIONS.

FLAG NOTES

1. EXCAVATE AND EXPOSE THE EXISTING SUB-MAINLINE PIPE AT THE APPROXIMATE LOCATION SHOWN. CONNECT TO THE EXISTING MAINLINE PIPE USING PVC SHC 40 SOLVENT WELD REPAIR COUPLINGS. INSTALL JOINT RESTRAINTS, BACKFILL HOLES, AND COMPACT TO MATCH EXISTING CONDITIONS.
2. CONNECT TO EXISTING CAPPED ISOLATION GATE VALVE AT APPROXIMATE LOCATION INDICATED. USE PVC SCH 40 SOLVENT WELD FITTINGS. INSTALL NEW SPRINKLERS AS SHOWN. BACKFILL AND COMPACT TO MATCH EXISTING CONDITIONS.

LEGEND

- MAINLINE PIPE
  - *TYPE: PVC CL 200
  - *SIZE: PER PLANS
- EXISTING PVC MAINLINE PIPE TO BE ABANDONED IN PLACE, SALVAGE VALVES
- EXISTING PVC LATERAL PIPE TO BE ABANDONED IN PLACE,
- EXISTING V-I-H SPRINKLERS, SALVAGE AND TURN OVER SEE BELOW FOR TYPE.
- LATERAL PIPE TO SPRINKLERS
  - *TYPE: CLASS 160 PVC
  - *SIZE: 1-INCH UNLESS OTHERWISE INDICATED
- NEW CONTROL AND COMMUNICATION WIRE PATH
- UNCONNECTED PIPE CROSSING
- POINT-OF-CONNECTION (P.O.C.)
- QUICK COUPLING VALVE ASSEMBLY
  - *MODEL: RAIN BIRD 5LRC
- SUBMAIN ISOLATION GATE VAVLE
- POP-UP VALVE-IN HEAD SPRINKLER TORO FLEX800 55 @ 65 PSI
  - *NUMBER WITHIN IS NOZZLE

NOZZLE	FLOW(GPM)	RADIUS(FEET)
54	28.7	69

NOTE: ALL SHADED IRRIGATION COMPONENTS ARE EXISTING. PRIOR TO CONSTRUCTION A CLEAN SET OF RECORD DRAWINGS THAT THESE PLANS HAVE REFERENCED WILL BE AVAILABLE IN PDF FORMAT.
THESE RECORD DRAWINGS HAVE BEEN PREPARED BASED ON INFORMATION PROVIDED BY THE CONTRACTOR. THE INFORMATION PROVIDED BY THE CONTRACTOR IS BELIEVED TO BE RELIABLE AND CORRECT, HOWEVER AQUA ENGINEERING IS NOT RESPONSIBLE FOR ITS ACCURACY, NOR FOR ERRORS OR OMISSIONS WHICH MAY HAVE BEEN INCORPORATED INTO THESE DRAWINGS AS A RESULT.

CANNOT BE USED FOR BIDDING

Revisions: Date

CONSULTANTS:

STRUCTURAL: STEINLE CONSTRUCTION ENGINEERS A DIVISION OF VANDEMARK & LYNCH, INC. SCE 4305 MILLER ROAD WILMINGTON, DE 19802, 302-764-7635 www.steinleengineers.com

MECHANICAL/ELECTRICAL: PEC PARAGON ENGINEERING CORPORATION MECHANICAL/ELECTRICAL 708 Philadelphia Pike Wilmington, DE 19809 ph: 302.762.6010 fax: 302.762.0653

IRRIGATION: Aqua Engineering Inc. Innovative Water Solutions

GEOTECHNICAL: GTA GEO-TECHNOLOGY ASSOCIATES, INC. 18 Boulden Circle, Suite 36 New Castle, DE 19720 Tel: 302-326-2100

CEMETERY DESIGN: The LA GROUP Landscape Architecture & Engineering P.C. Prof'l. Purpose Plan 40 Long Alley Saratoga Springs NY 12866 p 518-587-8100 f 518-587-0180 www.thelagroup.com

ARCHITECT/ENGINEER:

SURVEYING: VANDEMARK & LYNCH, INC. ENGINEERS – PLANNERS – SURVEYORS 4305 MILLER ROAD WILMINGTON, DE 19802 (302) 764-7635 WWW.VANDEMARKLYNCH.COM

JOHN D. LEONARD Certified Irrigation Designer 46102 IRRIGATION ASSOCIATION 4/29/2016

U.S. DEPARTMENT OF VETERANS AFFAIRS

Drawing Title: IRRIGATION NOTES AND LEGEND

Approved: Project Director

Project Title: DELAWARE VETERANS MEMORIAL CEMETERY

Location: MILLSBORO, DELAWARE

Date: 5/2/2016 | Checked: RWB | Drawn: JDL

Project Number: DE-13-21

Building Number:

Drawing Number: LI101

Dwg 24 of 28

State of Delaware — Division of Facilities Management

Printed By: JDLEONARD
Date Printed: 4/29/2016 9:00:00 AM
File Name: G:\VA\MILLSBORO\MCP-MS\Irrigation.dwg

VA FORM 08-6231, OCT 1978

BID SET DOCUMENTS SUBMISSION

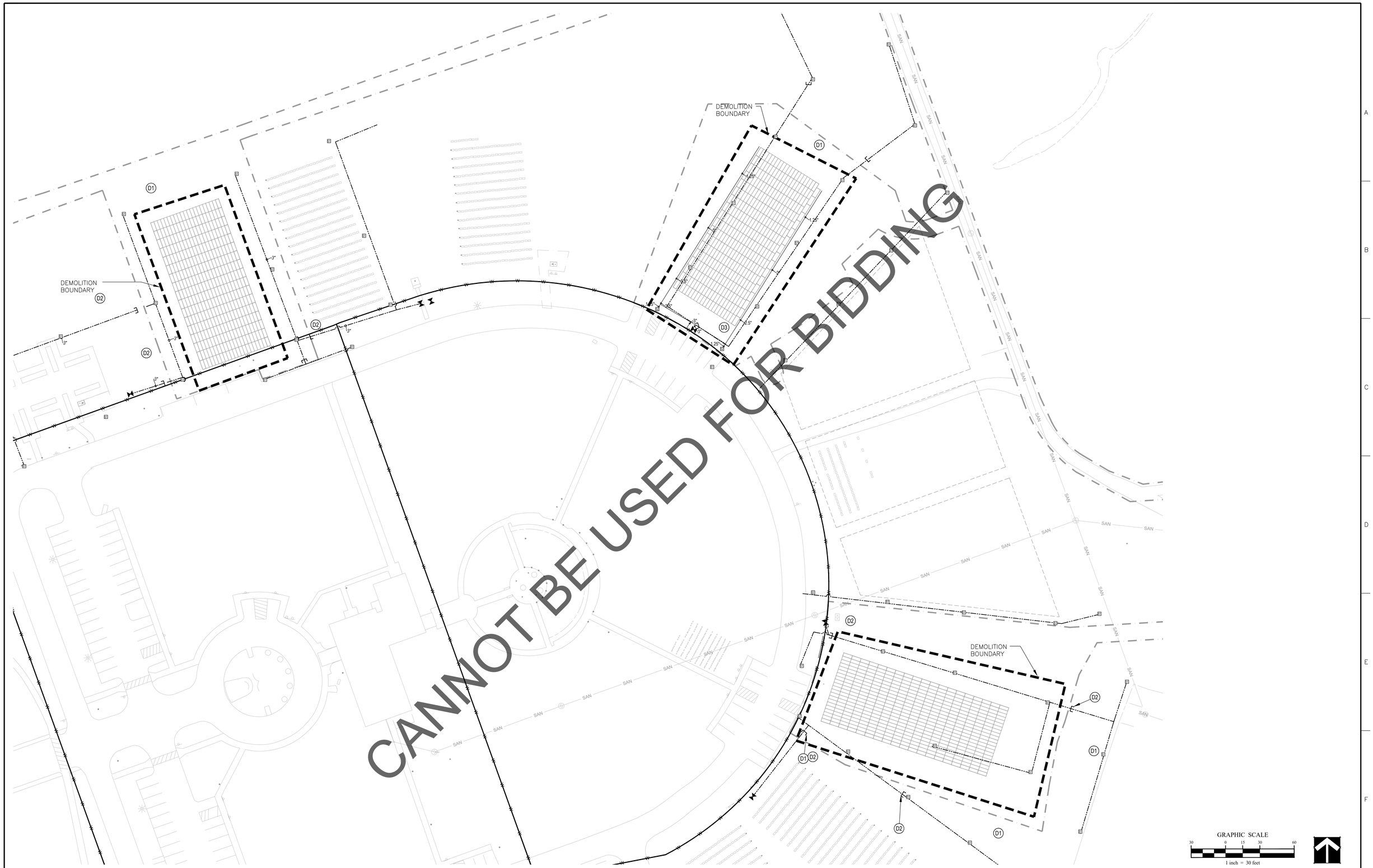

Revisions:	Date

CONSULTANTS:

STRUCTURAL
STEINLE CONSTRUCTION ENGINEERS
A DIVISION OF VANDEMARK & LYNCH, INC.
SCE
4305 MILLER ROAD
WILMINGTON, DE 19802, 302-764-7635
www.steinleengineers.com

MECHANICAL/ELECTRICAL
PEC PARAGON ENGINEERING CORPORATION
MECHANICAL/ELECTRICAL
708 Philadelphia Pike
Wilmington, DE 19809
ph: 302.762.6010
fax: 302.762.0653

IRRIGATION
Aqua Engineering Inc.
Innovative Water Solutions

GEOTECHNICAL
GTA
GEO-TECHNOLOGY ASSOCIATES, INC.
18 Boulden Circle, Suite 36
New Castle, DE 19720
Tel: 302-326-2100

CEMETERY DESIGN
The LA GROUP
Landscape Architecture & Engineering P.C.
People. Purpose. Place.
40 Long Alley
Saratoga Springs
NY 12866
p: 518-587-8100
f: 518-587-0180
www.thelagroup.com

ARCHITECT/ENGINEER:

SURVEYING
VANDEMARK & LYNCH, INC.
ENGINEERS – PLANNERS – SURVEYORS
4305 MILLER ROAD
WILMINGTON, DE 19802/(302) 764-7635
WWW.VANDEMARKLYNCH.COM

JOHN D. LEONARD
Certified Irrigation Designer
46102
IRRIGATION ASSOCIATION
4/29/2016

U.S. DEPARTMENT OF VETERANS AFFAIRS

Drawing Title
IRRIGATION DEMOLITION PLAN

Approved: Project Director

Project Title
DELAWARE VETERANS MEMORIAL CEMETERY

Location
MILLSBORO, DELAWARE

Date 5/2/2016 | Checked RWB | Drawn JDL

Project Number DE-13-21

Building Number

Drawing Number LI102

Dwg 25 of 28

State of Delaware
Division of Facilities Management

Printed By: JDLEONARD
Date Printed: 5/2/2016 9:11:11 AM
File Name: G:\VA\LIBS\CIVIL\DCF-MSBoro-LI.dwg

VA FORM 08-6231, OCT 1978

BID SET DOCUMENTS SUBMISSION

Revisions: Date

CONSULTANTS:

STRUCTURAL
STEINLE CONSTRUCTION ENGINEERS
A DIVISION OF VANDEMARK & LYNCH, INC.
SCE
4305 MILLER ROAD
WILMINGTON, DE 19802, 302-764-7635
www.steinleengineers.com

MECHANICAL/ELECTRICAL
PEC PARAGON ENGINEERING CORPORATION
MECHANICAL/ELECTRICAL
708 Philadelphia Pike
Wilmington, DE 19809
ph: 302.762.6010
fax: 302.762.0653

IRRIGATION
Aqua Engineering Inc.
Innovative Water Solutions

GEOTECHNICAL
GTA
GEO-TECHNOLOGY ASSOCIATES, INC.
18 Boulden Circle, Suite 36
New Castle, DE 19720
Tel: 302-326-2100

CEMETERY DESIGN
The LA GROUP
Landscape Architecture & Engineering P.C.
Purple, Purpose, Plan
40 Long Alley
Saratoga Springs
NY 12866
518-587-8000
518-587-0180
www.thelagroup.com

ARCHITECT/ENGINEER:

SURVEYING
VANDEMARK & LYNCH, INC.
ENGINEERS – PLANNERS – SURVEYORS
4305 MILLER ROAD
WILMINGTON, DE 19802/(302) 764–7635
WWW.VANDEMARKLYNCH.COM

JOHN D. LEONARD
Certified Irrigation Specialist
46102
IRRIGATION ASSOCIATION
4/29/2016

U.S. DEPARTMENT OF VETERANS AFFAIRS

Drawing Title
IRRIGATION PLAN

Approved: Project Director

Project Title
DELAWARE VETERANS MEMORIAL CEMETERY

Location
MILLSBORO, DELAWARE

Date 5/2/2016 | Checked RWB | Drawn JDL

Project Number DE–13–21

Building Number

Drawing Number
LI103

Dwg 26 of 28

State of Delaware
Division of Facilities Management

Printed By: JOE LEONARD
Date Printed: 5/2/2016 9:00 AM
File Name: G:\VDL\MILLSBORO\WCP-Millsboro.dwg

VA FORM 08-6231, OCT 1978

BID SET DOCUMENTS SUBMISSION

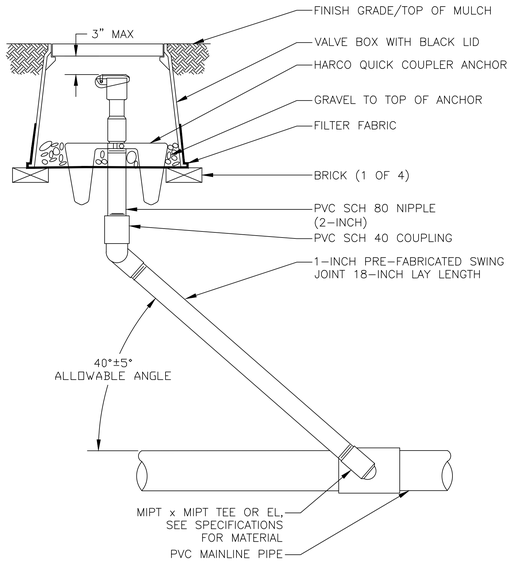

NOTES:
1. FURNISH FITTINGS AND PIPING NOMINALLY SIZED IDENTICAL TO NOMINAL QUICK COUPLING VALVE INLET SIZE.
2. INSTALL SWING JOINT LAY ARM BETWEEN 30° AND 45° OF LATERAL PIPE IN ORDER TO ABSORB DOWNWARD IMPACT. IF SWING JOINT CAN NOT BE INSTALLED AT SPECIFIED ANGLE, CONSULT RESIDENT ENGINEER PRIOR TO INSTALLATION OF SWING JOINT.
3. BRAND VALVE BOX LID PER SPECIFICATIONS.

1 QUICK COUPLING VALVE ASSEMBLY

N.T.S.

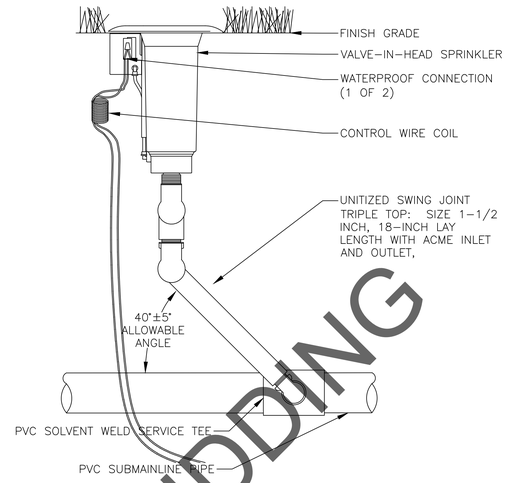

NOTES:
1. INSTALL SWING JOINT LAY ARM BETWEEN 30° AND 45° OF LATERAL PIPE IN ORDER TO ABSORB DOWNWARD IMPACT. IF SWING JOINT CAN NOT BE INSTALLED AT SPECIFIED ANGLE, CONSULT ENGINEER PRIOR TO INSTALLATION OF SWING JOINT.

2 VALVE-IN-HEAD SPRINKLER ASSEMBLY

N.T.S.

CANNOT BE USED FOR BIDDING

Revisions: Date

CONSULTANTS:

STRUCTURAL
STEINLE CONSTRUCTION ENGINEERS
A DIVISION OF VANDEMARK & LYNCH, INC.
SCE
4305 MILLER ROAD
WILMINGTON, DE 19802, 302-764-7635
www.steinleengineers.com

MECHANICAL/ELECTRICAL
PEC PARAGON ENGINEERING CORPORATION
MECHANICAL/ELECTRICAL
708 Philadelphia Pike
Wilmington, DE 19809
ph: 302.762.6010
fax: 302.762.0653

IRRIGATION
Aqua Engineering Inc.
Innovative Water Solutions

GEOTECHNICAL
GTA
GEO-TECHNOLOGY ASSOCIATES, INC.
18 Boulden Circle, Suite 36
New Castle, DE 19720
Tel: 302-326-2100

CEMETERY DESIGN
The LA GROUP
Landscape Architecture & Engineering P.C.
People. Purpose. Place.
40 Long Alley
Saratoga Springs
NY 12866
p: 518-587-8100
f: 518-587-0180
www.thelagroup.com

ARCHITECT/ENGINEER:

SURVEYING
VANDEMARK & LYNCH, INC.
ENGINEERS – PLANNERS – SURVEYORS
4305 MILLER ROAD
WILMINGTON, DE 19802 (302) 764-7635
WWW.VANDEMARKLYNCH.COM

JOHN D. LEONARD
Certified Irrigation Designer
IA CERTIFICATION ASSOCIATION
46102
4/29/2016

U.S. DEPARTMENT OF VETERANS AFFAIRS

Drawing Title: IRRIGATION DETAILS

Approved: Project Director

Project Title: DELAWARE VETERANS MEMORIAL CEMETERY

Location: MILLSBORO, DELAWARE

Date: 5/2/2016 | Checked: RWB | Drawn: JDL

Project Number: DE-13-21

Building Number:

Drawing Number: LI501

Dwg 27 of 28

State of Delaware
Division of Facilities Management

Printed By: JDLEONARD
Date Printed: 5/2/2016 9:00:00 AM
File Name: G:\VA\MILLSBORO\MCAP-MS\Irrigation.dwg

VA FORM 08-6231, OCT 1978

BID SET DOCUMENTS SUBMISSION

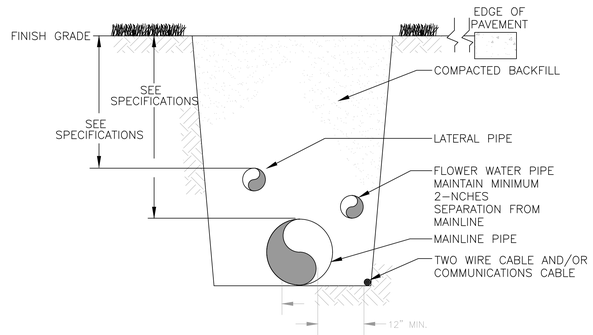

1 TRENCHING DETAIL N.T.S.

CANNOT BE USED FOR BIDDING

Revisions: Date

CONSULTANTS:

STRUCTURAL
STEINLE CONSTRUCTION ENGINEERS
A DIVISION OF VANDEMARK & LYNCH, INC.
SCE
4305 MILLER ROAD
WILMINGTON, DE 19802, 302-764-7635
www.steinleengineers.com

MECHANICAL/ELECTRICAL
PEC PARAGON ENGINEERING CORPORATION
MECHANICAL/ELECTRICAL
708 Philadelphia Pike
Wilmington, DE 19809
ph: 302.762.6010
fax: 302.762.0653

IRRIGATION
Aqua Engineering Inc.
Innovative Water Solutions

GEOTECHNICAL
GTA
GEO-TECHNOLOGY ASSOCIATES, INC.
18 Boulden Circle, Suite 36
New Castle, DE 19720
Tel: 302-326-2100

CEMETERY DESIGN
The LA GROUP
Landscape Architecture & Engineering P.C.
People. Purpose. Place.
40 Long Alley
Saratoga Springs
NY 12866
p: 518-587-8100
f: 518-587-0180
www.thelagroup.com

ARCHITECT/ENGINEER:

SURVEYING
VANDEMARK & LYNCH, INC.
ENGINEERS – PLANNERS – SURVEYORS
4305 MILLER ROAD
WILMINGTON, DE 19802/(302) 764-7635
WWW.VANDEMARKLYNCH.COM

JOHN D. LEONARD
Certified Irrigation Designer
46102
IRRIGATION ASSOCIATION
4/29/2016

U.S. DEPARTMENT OF VETERANS AFFAIRS

Drawing Title: IRRIGATION DETAILS

Approved: Project Director

Project Title: DELAWARE VETERANS MEMORIAL CEMETERY

Location: MILLSBORO, DELAWARE

Date: 5/2/2016 | Checked: RWB | Drawn: JDL

Project Number: DE-13-21

Building Number:

Drawing Number: LI502

Dwg 28 of 28

State of Delaware
Division of Facilities Management

Printed By: JDLEONARD
Date Printed: 4/29/2016 9:00:00 AM
File Name: G:\VA\LIBS\CBOC\NCP-MS\Mission.dwg

VA FORM 08-6231, OCT 1978

BID SET DOCUMENTS SUBMISSION