STATE OF DELAWARE
CAESAR RODNEY SCHOOL DISTRICT
CONTRACT # SRS-18-012-NEWELEM

SPECIFICATIONS
VOLUME 2

FOR

NEW CAESAR RODNEY ELEMENTARY SCHOOL

IN

Magnolia, Delaware

PREPARED
BY

BECKER MORGAN GROUP
ARCHITECTURE ENGINEERING

Becker Morgan Group, Inc.

REBID DOCUMENTS
November 30, 2018

DOCUMENT 000101 - PROJECT TITLE PAGE

1.1 PROJECT MANUAL VOLUME 2

A. New Caesar Rodney Elementary School.

B. Magnolia, Delaware.

C. Owner Project No. SRS-18-012-NEWELEM.

D. Architect Project No. 2017073.00.

E. Owner: Caesar Rodney School District. Ken Starke
7 Front Street
Wyoming, Delaware 19934
Phone: 302.698.4800 Fax: 302.697.3406

F. Architect: Becker Morgan Group, Inc. Bryan Hutchison, AIA
312 West Main Street, Suite 300
Salisbury, Maryland 21801
Phone: 410.546.9100 Fax: 410.546.5824

G. Civil Engineer: Becker Morgan Group, Inc. Jonathan Falkowski, P.E.
309 South Governors Avenue
Dover, Delaware 19904
Phone: 302.734.7950 Fax: 302.734.7965

H. Structural Engineer: Baker Ingram Associates, Inc. Cherie Moore, P.E.
1050 South State Street
Dover, Delaware 19901
Phone: 302.734.7400 Fax: 302.734.7592

I. Mechanical and Electrical Engineer: Studio JAED Brian Zigmond, P.E.
2500 Wrangle Hill Road
Fox Run Office Plaza, Suite 110
Bear, Delaware 19701
Phone: 302.832.1652 Fax: 302.832.1423

J. Food Service Consultant: Nyikos Associates, Inc. Jay Garcia, FCSI
18205-A Flower Hill Way
Gaithersburg, Maryland 20879
Phone: 240.683.9530 Fax: 240.683.9532

K. Issued: November 30, 2018.

L. Copyright 2018 Becker Morgan Group, Inc. All rights reserved.

END OF DOCUMENT 000101

SECTION 000110 TABLE OF CONTENTS

VOLUME I

DIVISION 00 – PROCUREMENT AND CONTRACTING REQUIREMENTS

000101	PROJECT TITLE PAGE
000110	TABLE OF CONTENTS
000115	LIST OF DRAWING SHEETS
001116	INVITATION TO BID
002113	INSTRUCTIONS TO BIDDERS
002600	PROCUREMENT SUBSTITUTION PROCEDURES
002600A	SUBSTITUTION REQUEST – BIDDING AND NEGOTIATING PHASE
003132	GEOTECHNICAL DATA
003132A	HILLIS-CARNES GEOTECHNICAL ENGINEERING REPORT
004113	BID FORM
004313	BID BOND
004393	BID SUBMITTAL CHECKLIST
005213	AGREEMENT FORM – STIPULATED SUM
005213A	AIA DOCUMENT A101-2017 STANDARD FORM OF AGREEMENT BETWEEN OWNER AND CONTRACTOR
005400	SUPPLEMENT TO AGREEMENT A101-2017 – EXHIBIT A INSURANCE AND BONDS
005400A	AIA A101-2017 EXHIBIT A INSURANCE AND BONDS
006000	PROJECT FORMS
006100A	PERFORMANCE BOND
006100B	PAYMENT BOND
006216	CERTIFICATES OF INSURANCE
007200	GENERAL CONDITIONS
007200A	AIA DOCUMENT A201-2017 GENERAL CONDITIONS OF THE CONTRACT FOR CONSTRUCTION
007300	SUPPLEMENTARY GENERAL CONDITIONS
007346	WAGE DETERMINATION SCHEDULE
007346A	PREVAILING WAGE RATES
008113	GENERAL REQUIREMENTS
008114	DRUG TESTING REPORT FORMS

DIVISION 01 – GENERAL REQUIREMENTS

011000	SUMMARY
012100	ALLOWANCES
012100A	ALLOWANCE AUTHORIZATION FORM
012200	UNIT PRICES
012300	ALTERNATES
012500	SUBSTITUTION PROCEDURES
012500A	SUBSTITUTION REQUEST – CONSTRUCTION PHASE
012600	CONTRACT MODIFICATION PROCEDURES
012600A	EXHIBIT – FIELD BULLETIN
012900	PAYMENT PROCEDURES
013100	PROJECT MANAGEMENT AND COORDINATION
013100A	RELEASE OF ELECTRONIC MEDIA
013100B	CADD RELEASE FORM
013200	CONSTRUCTION PROGRESS DOCUMENTATION
013300	SUBMITTAL PROCEDURES
014000	QUALITY REQUIREMENTS
014200	REFERENCES
015000	TEMPORARY FACILITIES AND CONTROLS

016000	PRODUCT REQUIREMENTS
017300	EXECUTION
017700	CLOSEOUT PROCEDURES
017823	OPERATION AND MAINTENANCE DATA
017839	PROJECT RECORD DOCUMENTS
017900	DEMONSTRATION AND TRAINING
019113	GENERAL COMMISSIONING REQUIREMENTS

VOLUME II

DIVISION 02 – EXISTING CONDITIONS

NOT USED

DIVISION 03 – CONCRETE

033000	CAST-IN-PLACE CONCRETE

DIVISION 04 – MASONRY

042000	UNIT MASONRY
047200	CAST STONE MASONRY
047300	MANUFACTURED STONE MASONRY

DIVISION 05 – METALS

051200	STRUCTURAL STEEL
052100	STEEL JOIST FRAMING
053100	STEEL DECKING
054000	COLD-FORMED METAL FRAMING
054400	COLD-FORMED METAL TRUSSES
055000	METAL FABRICATIONS
055113	METAL PAN STAIRS
055133	METAL LADDERS
055213	PIPE AND TUBE RAILINGS
057000	DECORATIVE METAL

DIVISION 06 – WOOD, PLASTICS AND COMPOSITES

061053	MISCELLANEOUS ROUGH CARPENTRY
061600	SHEATHING
062013	EXTERIOR FINISH CARPENTRY
064023	INTERIOR ARCHITECTURAL WOODWORK
068200	COMPOSITE TRIM

DIVISION 07 – THERMAL AND MOISTURE PROTECTION

071113	BITUMINOUS DAMP PROOFING
071326	SELF-ADHERING SHEET WATERPROOFING
072100	THERMAL INSULATION
072500	WEATHER BARRIERS
072736	SPRAYED FOAM AIR BARRIER
074113.16	STANDING-SEAM METAL ROOF PANELS
074213.13	FORMED METAL WALL PANELS
074293	SOFFIT PANELS
075323	ETHYLENE-PROPYLENE-DIENE-MONOMER (EPDM) ROOFING
076200	SHEET METAL FLASHING AND TRIM
077100	ROOF SPECIALTIES
077200	ROOF ACCESSORIES

077253	SNOW GUARDS
078413	PENETRATION FIRESTOPPING
078443	JOINT FIRESTOPPING
079100	PREFORMED JOINT SEALS
079200	JOINT SEALANTS
079219	ACOUSTICAL JOINT SEALANTS
079513.13	INTERIOR EXPANSION JOINT COVER ASSEMBLIES

DIVISION 08 – OPENINGS

080671	DOOR HARDWARE SCHEDULE
081113	HOLLOW METAL DOORS AND FRAMES
081416	FLUSH WOOD DOORS
081600	COMPOSITE DOORS
083113	ACCESS DOORS AND FRAMES
083313	COILING COUNTER DOORS
083323	OVERHEAD COILING DOORS
084113	ALUMINUM-FRAMED ENTRANCES AND STOREFRONTS
085113	ALUMINUM WINDOWS
087100	DOOR HARDWARE
088000	GLAZING
088813	FIRE-RESISTANT GLAZING
089119	FIXED LOUVERS

DIVISION 09 – FINISHES

092116.23	GYPSUM BOARD SHAFT WALL ASSEMBLIES
092216	NON-STRUCTURAL METAL FRAMING
092900	GYPSUM BOARD
095113	ACOUSTICAL PANEL CEILINGS
095443	STRETCHED-FABRIC CEILING SYSTEMS
096513	RESILIENT BASE AND ACCESSORIES
096516	RESILIENT SHEET FLOORING
096519	RESILIENT TILE FLOORING
096566	RESILIENT ATHLETIC FLOORING
096723	RESINOUS FLOORING
096813	TILE CARPETING
097200	WALL COVERINGS
098433	SOUND-ABSORBING WALL UNITS
099113	EXTERIOR PAINTING
099123	INTERIOR PAINTING
099600	HIGH PERFORMANCE COATINGS

DIVISION 10 – SPECIALTIES

101100	VISUAL DISPLAY UNITS
101200	DISPLAY CASES
101416	PLAQUES
101416A	PLAQUE
101419	DIMENSIONAL LETTER SIGNAGE
101423	PANEL SIGNAGE
101463	ELECTRONIC MESSAGE SIGNAGE
102113.19	PLASTIC TOILET COMPARTMENTS
102123	CUBICLE CURTAINS AND TRACK
102239	FOLDING PANEL PARTITIONS
102800	TOILET, BATH, AND LAUNDRY ACCESSORIES
104413	FIRE PROTECTION CABINETS
104416	FIRE EXTINGUISHERS

105113 METAL LOCKERS
105613 METAL STORAGE SHELVING
107316.13 METAL CANOPIES
107326.13 METAL WALKWAY COVERINGS
107516 GROUND-SET FLAGPOLES

DIVISION 11 – EQUIPMENT

112800 OFFICE EQUIPMENT
113013 RESIDENTIAL APPLIANCES
114000 FOOD SERVICE EQUIPMENT
115213.19 REAR PROJECTION SCREENS
116143 STAGE CURTAINS
116623 GYMNASIUM EQUIPMENT

DIVISION 12 – FURNISHINGS

122113 HORIZONTAL LOUVER BLINDS
122413 ROLLER WINDOW SHADES
123216 MANUFACTURED PLASTIC-LAMINATE-CLAD CASEWORK
123623.13 PLASTIC-LAMINATE-CLAD COUNTERTOPS
123661.16 SOLID SURFACING COUNTERTOPS

DIVISION 13 – SPECIAL CONSTRUCTION

N/A

DIVISION 14 – CONVEYING EQUIPMENT

142400 HYDRAULIC ELEVATORS

VOLUME III

DIVISION 21 – FIRE SUPPRESSION

210500 COMMON WORK RESULTS FOR FIRE SUPPRESSION
210513 COMMON MOTOR REQUIREMENTS FOR FIRE SUPPRESSION EQUIPMENT
210548 VIBRATION & SEISMIC CONTROLS FOR FIRE SUPPRESSION PIPING AND EQUIPMENT
210553 IDENTIFICATION FOR FIRE SUPPRESSION PIPING AND EQUIPMENT
210719 FIRE SUPPRESSION PIPING INSULATION
211200 FIRE-SUPPRESSION STANDPIPES
211300 FIRE-SUPPRESSION SPRINKLER SYSTEMS
213000 FIRE PUMPS

DIVISION 22 – PLUMBING

220516 EXPANSION FITTINGS AND LOOPS FOR PLUMBING PIPING
220519 METERS AND GAGES FOR PLUMBING PIPING
220548 VIBRATION AND SEISMIC CONTROLS FOR PLUMBING PIPING AND EQUIPMENT
220553 IDENTIFICATION FOR PLUMBING PIPING AND EQUIPMENT
220716 PLUMBING EQUIPMENT INSULATION
220719 PLUMBING PIPING INSULATION
221005 PLUMBING PIPING
221006 PLUMBING PIPING SPECIALTIES
221113 FACILITY WATER DISTRIBUTION PIPING
221313 FACILITY SANITARY SEWERAGE
221343 FACILITY PACKAGED SEWAGE PUMPING STATION
223000 PLUMBING EQUIPMENT
224000 PLUMBING FIXTURES

DIVISION 23 – HVAC

230513	COMMON MOTOR REQUIREMENTS FOR HVAC EQUIPMENT
230516	EXPANSION FITTINGS AND LOOPS FOR HVAC PIPING
230519	METERS AND GAGES FOR HVAC PIPING
230548	VIBRATION AND SEISMIC CONTROLS FOR HVAC PIPING AND EQUIPMENT
230553	IDENTIFICATION FOR HVAC PIPING AND EQUIPMENT
230593	TESTING, ADJUSTING, AND BALANCING FOR HVAC
230713	DUCT INSULATION
230719	HVAC PIPING INSULATION
230800	COMMISSIONING OF HVAC
230923	DIRECT-DIGITAL CONTROL SYSTEM FOR HVAC
230993	SEQUENCE OF OPERATIONS FOR HVAC CONTROLS
232113	HYDRONIC PIPING
232300	REFRIGERANT PIPING
233100	HVAC DUCTS AND CASINGS
233300	AIR DUCT ACCESSORIES
233423	HVAC POWER VENTILATORS
233700	AIR OUTLETS AND INLETS
233813	COMMERCIAL-KITCHEN HOODS
237223	PACKAGED AIR-TO-AIR ENERGY RECOVERY UNITS
237413	PACKAGED OUTDOOR CENTRAL-STATION AIR-HANDLING UNITS
238101	TERMINAL HEAT TRANSFER UNITS
238127	SMALL SPLIT-SYSTEM HEATING AND COOLING
238129	VARIABLE REFRIGERANT VOLUME (VRV) HVAC SYSTEM

VOLUME IV

DIVISION 26 – ELECTRICAL

260519	LOW VOLTAGE ELECTRICAL POWER CONDUCTORS AND CABLES
260526	GROUNDING AND BONDING FOR ELECTRICAL SYSTEMS
260529	HANGARS AND SUPPORTS FOR ELECTRICAL SYSTEMS
260534	CONDUIT
260537	BOXES
260553	IDENTIFICATION FOR ELECTRICAL SYSTEMS
260573	POWER SYSTEM STUDIES
260919	ENCLOSED CONTACTORS
260923	LIGHTING CONTROL DEVICES
262200	LOW-VOLTAGE TRANSFORMERS
262413	SWITCHBOARDS
262416	PANELBOARDS
262701	ELECTRICAL SERVICE ENTRANCE
262717	EQUIPMENT WIRING
262726	WIRING DEVICES
262813	FUSES
262817	ENCLOSED CIRCUIT BREAKERS
262818	ENCLOSED SWITCHES
262913	ENCLOSED CONTROLLERS
262923	VARIABLE FREQUENCY MOTOR CONTROLLERS
263213	ENGINE GENERATORS
263600	TRANSFER SWITCHES
264300	SURGE PROTECTIVE DEVICES
265100	INTERIOR LIGHTING

265600 EXTERIOR LIGHTING

DIVISION 27 – COMMUNICATIONS

271005 STRUCTURED CABLING FOR VOICE AND DATA – INSIDE PLANT
275117 PUBLIC ADDRESS SYSTEMS
275120 GYM & CAFETERIA AUDIOVISUAL REINFORCEMENT SYSTEM
275313 WIRELESS CLOCK SYSTEMS

DIVISION 28 – ELECTRONIC SAFETY AND SECURITY

281000 ACCESS CONTROL SYSTEMS
281601 INTRUSION DETECTION SYSTEMS
282319 NETWORK VIDEO RECORDING SYSTEM
283100 FIRE DETECTION AND ALARM

DIVISION 31 – EARTHWORK

311000 SITE CLEARING
312000 EARTH MOVING
312319 DEWATERING
313116 TERMITE CONTROL
315000 EXCAVATION SUPPORT AND PROTECTION

DIVISION 32 – EXTERIOR IMPROVEMENTS

321216 ASPHALT PAVING
321313 CONCRETE PAVING
321373 CONCRETE JOINT SEALANT
323113 CHAIN LINK FENCES AND GATES
323300 SITE FURNISHINGS
329200 TURF AND GRASSES
329300 LANDSCAPE ARCHITECTURE

DIVISION 33 – UTILITIES

330500 COMMON WORK RESULTS FOR UTILITIES
334100 STORM DRAINAGE UTILITY PIPING
337119 ELECTRICAL UNDERGROUND DUCTS AND MANHOLES
337900 SITE GROUNDING

END OF TABLE OF CONTENTS

SECTION 033000 - CAST-IN-PLACE CONCRETE

PART 1 - GENERAL

1.1 RELATED DOCUMENTS

A. Drawings and general provisions of the Contract, including General and Supplementary Conditions and Division 01 Specification Sections, apply to this Section.

1.2 SUMMARY

A. Section includes cast-in-place concrete, including formwork, reinforcement, concrete materials, mixture design, placement procedures, and finishes.

B. Related Requirements:

1. Section 312000 "Earth Moving" for drainage fill under slabs-on-grade.
2. Section 321313 "Concrete Paving" for concrete pavement and walks.
3. Section 321316 "Decorative Concrete Paving" for decorative concrete pavement and walks.

1.3 DEFINITIONS

A. Cementitious Materials: Portland cement alone or in combination with one or more of the following: blended hydraulic cement, fly ash, slag cement, other pozzolans, and silica fume; materials subject to compliance with requirements.

B. W/C Ratio: The ratio by weight of water to cementitious materials.

1.4 PREINSTALLATION MEETINGS

A. Preinstallation Conference: Conduct conference at Project site.

1. Before submitting design mixtures, review concrete design mixture and examine procedures for ensuring quality of concrete materials. Require representatives of each entity directly concerned with cast-in-place concrete to attend, including the following:

   a. Contractor's superintendent.
   b. Independent testing agency responsible for concrete design mixtures.
   c. Ready-mix concrete manufacturer.
   d. Concrete Subcontractor.
   e. Special concrete finish Subcontractor.

2. Review special inspection and testing and inspecting agency procedures for field quality control, concrete finishes and finishing, cold- and hot-weather concreting procedures, curing procedures, construction contraction and isolation joints, and joint-filler strips,

semirigid joint fillers, vapor-retarder installation, anchor rod and anchorage device installation tolerances, steel reinforcement installation, [methods for achieving specified floor and slab flatness and levelness and concrete protection.

1.5 ACTION SUBMITTALS

A. Product Data: For each type of product.

B. Design Mixtures: For each concrete mixture. Submit alternate design mixtures when characteristics of materials, Project conditions, weather, test results, or other circumstances warrant adjustments.

1. Indicate amounts of mixing water to be withheld for later addition at Project site.

C. Steel Reinforcement Shop Drawings: Placing Drawings that detail fabrication, bending, and placement. Include bar sizes, lengths, material, grade, bar schedules, stirrup spacing, bent bar diagrams, bar arrangement, splices and laps, mechanical connections, tie spacing, hoop spacing, and supports for concrete reinforcement.

D. Construction Joint Layout: Indicate proposed construction joints required to construct the structure.

1. Location of construction joints is subject to approval of the Architect.

E. Samples: For waterstops & vapor retarder.

1.6 INFORMATIONAL SUBMITTALS

A. Qualification Data: For Installer, manufacturer & testing agency.

B. Welding certificates.

C. Material Certificates: For each of the following, signed by manufacturers:

1. Cementitious materials.
2. Admixtures.
3. Form materials and form-release agents.
4. Steel reinforcement and accessories.
5. Fiber reinforcement.
6. Waterstops.
7. Curing compounds.
8. Floor and slab treatments.
9. Bonding agents.
10. Adhesives.
11. Vapor retarders.
12. Semirigid joint filler.
13. Joint-filler strips.
14. Repair materials.

D. Material Test Reports: For the following, from a qualified testing agency:

1. Aggregates: Include service record data indicating absence of deleterious expansion of concrete due to alkali aggregate reactivity.

E. Formwork Shop Drawings: Prepared by or under the supervision of a qualified professional engineer, detailing fabrication, assembly, and support of formwork.

1. Shoring and Reshoring: Indicate proposed schedule and sequence of stripping formwork, shoring removal, and reshoring installation and removal.

F. Floor surface flatness and levelness measurements indicating compliance with specified tolerances.

G. Field quality-control reports.

H. Minutes of preinstallation conference.

1.7 QUALITY ASSURANCE

A. Installer Qualifications: A qualified installer who employs on Project personnel qualified as ACI-certified Flatwork Technician and Finisher and a supervisor who is an ACI-certified Concrete Flatwork Technician.

B. Manufacturer Qualifications: A firm experienced in manufacturing ready-mixed concrete products and that complies with ASTM C 94/C 94M requirements for production facilities and equipment.

1. Manufacturer certified according to NRMCA's "Certification of Ready Mixed Concrete Production Facilities."

C. Welding Qualifications: Qualify procedures and personnel according to AWS D1.4/D 1.4M.

1.8 PRECONSTRUCTION TESTING

A. Preconstruction Testing Service: Engage a qualified testing agency to perform preconstruction testing on concrete mixtures.

1.9 DELIVERY, STORAGE, AND HANDLING

A. Steel Reinforcement: Deliver, store, and handle steel reinforcement to prevent bending and damage. Avoid damaging coatings on steel reinforcement.

B. Waterstops: Store waterstops under cover to protect from moisture, sunlight, dirt, oil, and other contaminants.

1.10 FIELD CONDITIONS

A. Cold-Weather Placement: Comply with ACI 306.1 and as follows. Protect concrete work from physical damage or reduced strength that could be caused by frost, freezing actions, or low temperatures.

1. When average high and low temperature is expected to fall below 40 deg F (4.4 deg C) for three successive days, maintain delivered concrete mixture temperature within the temperature range required by ACI 301 (ACI 301M).
2. Do not use frozen materials or materials containing ice or snow. Do not place concrete on frozen subgrade or on subgrade containing frozen materials.
3. Do not use calcium chloride, salt, or other materials containing antifreeze agents or chemical accelerators unless otherwise specified and approved in mixture designs.

B. Hot-Weather Placement: Comply with ACI 301 (ACI 301M) and ACI 305.1 (ACI 305.1M), and as follows:

1. Maintain concrete temperature below 90 deg F (32 deg C) at time of placement. Chilled mixing water or chopped ice may be used to control temperature, provided water equivalent of ice is calculated to total amount of mixing water. Using liquid nitrogen to cool concrete is Contractor's option.
2. Fog-spray forms, steel reinforcement, and subgrade just before placing concrete. Keep subgrade uniformly moist without standing water, soft spots, or dry areas.

PART 2 - PRODUCTS

2.1 CONCRETE, GENERAL

A. ACI Publications: Comply with the following unless modified by requirements in the Contract Documents:

1. ACI 301 (ACI 301M).
2. ACI 117 (ACI 117M).

2.2 FORM-FACING MATERIALS

A. Smooth-Formed Finished Concrete: Form-facing panels that provide continuous, true, and smooth concrete surfaces. Furnish in largest practicable sizes to minimize number of joints.

1. Plywood, metal, or other approved panel materials.

B. Rough-Formed Finished Concrete: Plywood, lumber, metal, or another approved material. Provide lumber dressed on at least two edges and one side for tight fit.

C. Chamfer Strips: Wood, metal, PVC, or rubber strips, 3/4 by 3/4 inch (19 by 19 mm), minimum.

D. Form-Release Agent: Commercially formulated form-release agent that does not bond with, stain, or adversely affect concrete surfaces and does not impair subsequent treatments of concrete surfaces.

1. Formulate form-release agent with rust inhibitor for steel form-facing materials.

2.3 STEEL REINFORCEMENT

A. Reinforcing Bars: ASTM A 615/A 615M, Grade 60 (Grade 420), deformed.

B. Steel Bar Mats: ASTM A 184/A 184M, fabricated from ASTM A 615/A 615M, Grade 60 (Grade 420), deformed bars, assembled with clips.

C. Plain-Steel Wire: ASTM A 1064/A 1064M, as drawn.

D. Plain-Steel Welded-Wire Reinforcement: ASTM A 1064/A 1064M, plain, fabricated from as-drawn steel wire into flat sheets.

2.4 REINFORCEMENT ACCESSORIES

A. Bar Supports: Bolsters, chairs, spacers, and other devices for spacing, supporting, and fastening reinforcing bars and welded-wire reinforcement in place. Manufacture bar supports from steel wire, plastic, or precast concrete according to CRSI's "Manual of Standard Practice," of greater compressive strength than concrete and as follows:

1. For concrete surfaces exposed to view, where legs of wire bar supports contact forms, use CRSI Class 1 plastic-protected steel wire or CRSI Class 2 stainless-steel bar supports.

2.5 CONCRETE MATERIALS

A. Cementitious Materials:

1. Portland Cement: ASTM C 150/C 150M, Type I or Type II.
2. Fly Ash: ASTM C 618, Class F.
3. Blended Hydraulic Cement: ASTM C 595/C 595M, Type IS, portland blast-furnace slag cement.

B. Normal-Weight Aggregates: ASTM C 33/C 33M, coarse aggregate or better, graded. Provide aggregates from a single source.

1. Maximum Coarse-Aggregate Size: **1-1/2 inches (38 mm)** nominal.
2. Fine Aggregate: Free of materials with deleterious reactivity to alkali in cement.

C. Air-Entraining Admixture: ASTM C 260/C 260M.

D. Chemical Admixtures: Certified by manufacturer to be compatible with other admixtures and that do not contribute water-soluble chloride ions exceeding those permitted in hardened concrete. Do not use calcium chloride or admixtures containing calcium chloride.

1. Water-Reducing Admixture: ASTM C 494/C 494M, Type A.
2. Retarding Admixture: ASTM C 494/C 494M, Type B.
3. Water-Reducing and Retarding Admixture: ASTM C 494/C 494M, Type D.
4. High-Range, Water-Reducing Admixture: ASTM C 494/C 494M, Type F.
5. High-Range, Water-Reducing and Retarding Admixture: ASTM C 494/C 494M, Type G.
6. Plasticizing and Retarding Admixture: ASTM C 1017/C 1017M, Type II.

E. Set-Accelerating Corrosion-Inhibiting Admixture: Commercially formulated, anodic inhibitor or mixed cathodic and anodic inhibitor; capable of forming a protective barrier and minimizing chloride reactions with steel reinforcement in concrete and complying with ASTM C 494/C 494M, Type C.

F. Water: ASTM C 94/C 94M and potable.

2.6 WATERSTOPS

A. Flexible PVC Waterstops: CE CRD-C 572, for embedding in concrete to prevent passage of fluids through joints. Factory fabricate corners, intersections, and directional changes.

1. Manufacturers: Subject to compliance with requirements, available manufacturers offering products that may be incorporated into the Work include, but are not limited to, the following:

   a. BoMetals, Inc.
   b. Greenstreak.
   c. Paul Murphy Plastics Company.
   d. Vinylex Corp.

2. Profile: [**Flat dumbbell with center bulb**] [**Flat dumbbell without center bulb**] [**Ribbed with center bulb**] [**Ribbed without center bulb**] [**As indicated**] <**Insert profile**>.
3. Dimensions: **9 inches by 3/8 inch thick (225 mm by 10 mm thick)**; nontapered.

2.7 VAPOR RETARDERS

A. Sheet Vapor Retarder: ASTM E 1745, Class A. Include manufacturer's recommended adhesive or pressure-sensitive tape.

1. Products: Subject to compliance with requirements, available products that may be incorporated into the Work include, but are not limited to, the following:

   a. Fortifiber Building Systems Group; Moistop Ultra 15.
   b. Grace Construction Products, W. R. Grace & Co.; Florprufe 120.
   c. Meadows, W. R., Inc.; Perminator 15 mil.
   d. Raven Industries Inc.; Vapor Block 15.
   e. Stego Industries, LLC; Stego Wrap 15 mil Class A.

2.8 LIQUID FLOOR TREATMENTS

A. Penetrating Liquid Floor Treatment: Clear, chemically reactive, waterborne solution of inorganic silicate or siliconate materials and proprietary components; odorless; that penetrates, hardens, and densifies concrete surfaces.

1. Products: Subject to compliance with requirements, available products that may be incorporated into the Work include, but are not limited to, the following:

   a. ChemTec Int'l; ChemTec One.
   b. Euclid Chemical Company (The), an RPM company; Euco Diamond Hard.
   c. L&M Construction Chemicals, Inc.; Seal Hard.
   d. Meadows, W. R., Inc.; LIQUI-HARD.

2.9 CURING MATERIALS

A. Evaporation Retarder: Waterborne, monomolecular film forming, manufactured for application to fresh concrete.

1. Products: Subject to compliance with requirements, available products that may be incorporated into the Work include, but are not limited to, the following:

   a. Axim Italcementi Group, Inc.; CATEXOL CimFilm.
   b. ChemMasters; SprayFilm.
   c. Euclid Chemical Company (The), an RPM company; Eucobar.
   d. L&M Construction Chemicals, Inc.; E-CON.
   e. Meadows, W. R., Inc.; EVAPRE.

B. Absorptive Cover: AASHTO M 182, Class 2, burlap cloth made from jute or kenaf, weighing approximately 9 oz./sq. yd. (305 g/sq. m) when dry.

C. Moisture-Retaining Cover: ASTM C 171, polyethylene film or white burlap-polyethylene sheet.

D. Water: Potable.

E. Clear, Waterborne, Membrane-Forming Curing Compound: ASTM C 309, Type 1, Class B, dissipating.

1. Products: Subject to compliance with requirements, available products that may be incorporated into the Work include, but are not limited to, the following:

   a. Anti-Hydro International, Inc.; AH Curing Compound #2 DR WB.
   b. ChemMasters; Safe-Cure Clear.
   c. Euclid Chemical Company (The), an RPM company; Kurez W VOX; TAMMSCURE WB 30C.
   d. L&M Construction Chemicals, Inc.; L&M Cure R.
   e. Meadows, W. R., Inc.; 1100-CLEAR.

F. Clear, Waterborne, Membrane-Forming Curing Compound: ASTM C 309, Type 1, Class B, nondissipating, certified by curing compound manufacturer to not interfere with bonding of floor covering.

1. Products: Subject to compliance with requirements, available products that may be incorporated into the Work include, but are not limited to, the following:

a. Anti-Hydro International, Inc.; AH Clear Cure WB.
b. ChemMasters; Safe-Cure & Seal 20.
c. Euclid Chemical Company (The), an RPM company; Aqua Cure VOX; Clearseal WB 150.
d. L&M Construction Chemicals, Inc.; Dress & Seal WB.
e. Meadows, W. R., Inc.; Vocomp-20.

2.10 RELATED MATERIALS

A. Expansion- and Isolation-Joint-Filler Strips: ASTM D 1751, asphalt-saturated cellulosic fiber or ASTM D 1752, cork or self-expanding cork.

B. Semirigid Joint Filler: Two-component, semirigid, 100 percent solids, epoxy resin with a Type A shore durometer hardness of 80 or aromatic polyurea with a Type A shore durometer hardness range of 90 to 95 according to ASTM D 2240.

C. Bonding Agent: ASTM C 1059/C 1059M, Type II, nonredispersible, acrylic emulsion or styrene butadiene.

D. Epoxy Bonding Adhesive: ASTM C 881, two-component epoxy resin, capable of humid curing and bonding to damp surfaces, of class suitable for application temperature and of grade to suit requirements, and as follows:

1. Types IV and V, load bearing, for bonding hardened or freshly mixed concrete to hardened concrete.

E. Reglets: Fabricate reglets of not less than 0.022-inch- (0.55-mm-) thick, galvanized-steel sheet. Temporarily fill or cover face opening of reglet to prevent intrusion of concrete or debris.

F. Dovetail Anchor Slots: Hot-dip galvanized-steel sheet, not less than 0.034 inch (0.85 mm) thick, with bent tab anchors. Temporarily fill or cover face opening of slots to prevent intrusion of concrete or debris.

2.11 REPAIR MATERIALS

A. Repair Underlayment: Cement-based, polymer-modified, self-leveling product that can be applied in thicknesses from 1/8 inch (3.2 mm) and that can be feathered at edges to match adjacent floor elevations.

1. Cement Binder: ASTM C 150/C 150M, portland cement or hydraulic or blended hydraulic cement as defined in ASTM C 219.

2. Primer: Product of underlayment manufacturer recommended for substrate, conditions, and application.
3. Aggregate: Well-graded, washed gravel, 1/8 to 1/4 inch (3.2 to 6 mm) or coarse sand as recommended by underlayment manufacturer.
4. Compressive Strength: Not less than 4100 psi (29 MPa) at 28 days when tested according to ASTM C 109/C 109M.

B. Repair Overlayment: Cement-based, polymer-modified, self-leveling product that can be applied in thicknesses from 1/4 inch (6.4 mm) and that can be filled in over a scarified surface to match adjacent floor elevations.

1. Cement Binder: ASTM C 150/C 150M, portland cement or hydraulic or blended hydraulic cement as defined in ASTM C 219.
2. Primer: Product of topping manufacturer recommended for substrate, conditions, and application.
3. Aggregate: Well-graded, washed gravel, 1/8 to 1/4 inch (3.2 to 6 mm) or coarse sand as recommended by topping manufacturer.
4. Compressive Strength: Not less than 5000 psi (34.5 MPa) at 28 days when tested according to ASTM C 109/C 109M.

2.12 CONCRETE MIXTURES, GENERAL

A. Prepare design mixtures for each type and strength of concrete, proportioned on the basis of laboratory trial mixture or field test data, or both, according to ACI 301 (ACI 301M).

1. Use a qualified independent testing agency for preparing and reporting proposed mixture designs based on laboratory trial mixtures.

B. Cementitious Materials:[**Use fly ash, pozzolan, slag cement, and silica fume as needed to reduce the total amount of portland cement, which would otherwise be used, by not less than 40 percent.**] [**Limit percentage, by weight, of cementitious materials other than portland cement in concrete as follows:**]

1. Fly Ash: 25 percent.
2. Combined Fly Ash and Pozzolan: 25 percent.
3. Slag Cement: 50 percent.
4. Combined Fly Ash or Pozzolan and Slag Cement: 50 percent portland cement minimum, with fly ash or pozzolan not exceeding 25 percent.
5. Silica Fume: 10 percent.
6. Combined Fly Ash, Pozzolans, and Silica Fume: 35 percent with fly ash or pozzolans not exceeding 25 percent and silica fume not exceeding 10 percent.
7. Combined Fly Ash or Pozzolans, Slag Cement, and Silica Fume: 50 percent with fly ash or pozzolans not exceeding 25 percent and silica fume not exceeding 10 percent.

C. Limit water-soluble, chloride-ion content in hardened concrete to [**0.06**] [**0.15**] [**0.30**] [**1.00**] <**Insert number**> percent by weight of cement.

D. Admixtures: Use admixtures according to manufacturer's written instructions.

1. Use [**water-reducing**] [**high-range water-reducing**] [**or**] [**plasticizing**] admixture in concrete, as required, for placement and workability.
2. Use water-reducing and -retarding admixture when required by high temperatures, low humidity, or other adverse placement conditions.
3. Use water-reducing admixture in pumped concrete, concrete for heavy-use industrial slabs and parking structure slabs, concrete required to be watertight, and concrete with a w/c ratio below 0.50.
4. Use corrosion-inhibiting admixture in concrete mixtures where indicated.

E. Color Pigment: Add color pigment to concrete mixture according to manufacturer's written instructions and to result in hardened concrete color consistent with approved mockup.

2.13 CONCRETE MIXTURES FOR BUILDING ELEMENTS

A. Footings: Normal-weight concrete.

1. Minimum Compressive Strength: 3000 psi (20.7 MPa) at 28 days.
2. Maximum W/C Ratio: 0.50.
3. Slump Limit: 4 inches (100 mm) for concrete with verified slump of 2 to 4 inches (50 to 100 mm) plus or minus 1 inch (25 mm).
4. Air Content: 5.5 percent, plus or minus 1.5 percent at point of delivery for 1-1/2-inch (38-mm) nominal maximum aggregate size.

B. Foundation Walls and Piers: Normal-weight concrete.

1. Minimum Compressive Strength: 4000 psi (27.6 MPa) at 28 days.
2. Maximum W/C Ratio: 0.45.
3. Slump Limit: 4 inches (100 mm) , plus or minus 1 inch (25 mm).
4. Air Content: 5.5 percent, plus or minus 1.5 percent at point of delivery for 1-1/2-inch (38-mm) nominal maximum aggregate size.

C. Slabs-on-Grade: Normal-weight concrete.

1. Minimum Compressive Strength: 5000 psi (34.5 MPa) exterior and 4000 psi (27.6 MPa) interior at 28 days.
2. Maximum W/C Ratio: 0.45.
3. Slump Limit: 4 inches (100 mm), plus or minus 1 inch (25 mm).
4. Air Content: 5.5 percent, plus or minus 1.5 percent at point of delivery for 1-1/2-inch (38-mm) nominal maximum aggregate size.
5. Air Content: Do not allow air content of trowel-finished floors to exceed 3 percent.

D. Suspended Slabs: Normal-weight concrete.

1. Minimum Compressive Strength: **4000 psi (27.6 MPa)** at 28 days.
2. Maximum W/C Ratio: 0.45.
3. Minimum Cementitious Materials Content: 520 lb/cu. yd. (309 kg/cu. m).
4. Slump Limit: 4 inches (100 mm), plus or minus 1 inch (25 mm).
5. Air Content: 5.5 percent, plus or minus 1.5 percent at point of delivery for 1-1/2-inch (38-mm) nominal maximum aggregate size.
6. Air Content: Do not allow air content of trowel-finished floors to exceed 3 percent.

2.14 FABRICATING REINFORCEMENT

A. Fabricate steel reinforcement according to CRSI's "Manual of Standard Practice."

2.15 CONCRETE MIXING

A. Ready-Mixed Concrete: Measure, batch, mix, and deliver concrete according to ASTM C 94/C 94M and ASTM C 1116/C 1116M, and furnish batch ticket information.

1. When air temperature is between 85 and 90 deg F (30 and 32 deg C), reduce mixing and delivery time from 1-1/2 hours to 75 minutes; when air temperature is above 90 deg F (32 deg C), reduce mixing and delivery time to 60 minutes.

B. Project-Site Mixing: Measure, batch, and mix concrete materials and concrete according to ASTM C 94/C 94M. Mix concrete materials in appropriate drum-type batch machine mixer.

1. For mixer capacity of 1 cu. yd. (0.76 cu. m) or smaller, continue mixing at least 1-1/2 minutes, but not more than 5 minutes after ingredients are in mixer, before any part of batch is released.
2. For mixer capacity larger than 1 cu. yd. (0.76 cu. m), increase mixing time by 15 seconds for each additional 1 cu. yd. (0.76 cu. m).
3. Provide batch ticket for each batch discharged and used in the Work, indicating Project identification name and number, date, mixture type, mixture time, quantity, and amount of water added. Record approximate location of final deposit in structure.

PART 3 - EXECUTION

3.1 FORMWORK INSTALLATION

A. Design, erect, shore, brace, and maintain formwork, according to ACI 301 (ACI 301M), to support vertical, lateral, static, and dynamic loads, and construction loads that might be applied, until structure can support such loads.

B. Construct formwork so concrete members and structures are of size, shape, alignment, elevation, and position indicated, within tolerance limits of ACI 117 (ACI 117M).

C. Construct forms tight enough to prevent loss of concrete mortar.

D. Construct forms for easy removal without hammering or prying against concrete surfaces. Provide crush or wrecking plates where stripping may damage cast-concrete surfaces. Provide top forms for inclined surfaces steeper than 1.5 horizontal to 1 vertical.

1. Install keyways, reglets, recesses, and the like, for easy removal.
2. Do not use rust-stained steel form-facing material.

E. Set edge forms, bulkheads, and intermediate screed strips for slabs to achieve required elevations and slopes in finished concrete surfaces. Provide and secure units to support screed strips; use strike-off templates or compacting-type screeds.

F. Provide temporary openings for cleanouts and inspection ports where interior area of formwork is inaccessible. Close openings with panels tightly fitted to forms and securely braced to prevent loss of concrete mortar. Locate temporary openings in forms at inconspicuous locations.

G. Chamfer exterior corners and edges of permanently exposed concrete.

H. Form openings, chases, offsets, sinkages, keyways, reglets, blocking, screeds, and bulkheads required in the Work. Determine sizes and locations from trades providing such items.

I. Clean forms and adjacent surfaces to receive concrete. Remove chips, wood, sawdust, dirt, and other debris just before placing concrete.

J. Retighten forms and bracing before placing concrete, as required, to prevent mortar leaks and maintain proper alignment.

K. Coat contact surfaces of forms with form-release agent, according to manufacturer's written instructions, before placing reinforcement.

3.2 EMBEDDED ITEM INSTALLATION

A. Place and secure anchorage devices and other embedded items required for adjoining work that is attached to or supported by cast-in-place concrete. Use setting drawings, templates, diagrams, instructions, and directions furnished with items to be embedded.

1. Install anchor rods, accurately located, to elevations required and complying with tolerances in Section 7.5 of AISC 303.
2. Install reglets to receive waterproofing and to receive through-wall flashings in outer face of concrete frame at exterior walls, where flashing is shown at lintels, shelf angles, and other conditions.
3. Install dovetail anchor slots in concrete structures as indicated.

3.3 REMOVING AND REUSING FORMS

A. General: Formwork for sides of beams, walls, columns, and similar parts of the Work that does not support weight of concrete may be removed after cumulatively curing at not less than 50 deg F (10 deg C) for 24 hours after placing concrete. Concrete has to be hard enough to not be damaged by form-removal operations, and curing and protection operations need to be maintained.

1. Leave formwork for beam soffits, joists, slabs, and other structural elements that support weight of concrete in place until concrete has achieved at least 70 percent of its 28-day design compressive strength.
2. Remove forms only if shores have been arranged to permit removal of forms without loosening or disturbing shores.

B. Clean and repair surfaces of forms to be reused in the Work. Split, frayed, delaminated, or otherwise damaged form-facing material are not acceptable for exposed surfaces. Apply new form-release agent.

C. When forms are reused, clean surfaces, remove fins and laitance, and tighten to close joints. Align and secure joints to avoid offsets. Do not use patched forms for exposed concrete surfaces unless approved by Architect.

3.4 VAPOR-RETARDER INSTALLATION

A. Sheet Vapor Retarders: Place, protect, and repair sheet vapor retarder according to ASTM E 1643 and manufacturer's written instructions.

1. Lap joints 6 inches (150 mm) and seal with manufacturer's recommended tape.

B. Bituminous Vapor Retarders: Place, protect, and repair bituminous vapor retarder according to manufacturer's written instructions.

3.5 STEEL REINFORCEMENT INSTALLATION

A. General: Comply with CRSI's "Manual of Standard Practice" for fabricating, placing, and supporting reinforcement.

1. Do not cut or puncture vapor retarder. Repair damage and reseal vapor retarder before placing concrete.

B. Clean reinforcement of loose rust and mill scale, earth, ice, and other foreign materials that reduce bond to concrete.

C. Accurately position, support, and secure reinforcement against displacement. Locate and support reinforcement with bar supports to maintain minimum concrete cover. Do not tack weld crossing reinforcing bars.

1. Weld reinforcing bars according to AWS D1.4/D 1.4M, where indicated.

D. Set wire ties with ends directed into concrete, not toward exposed concrete surfaces.

E. Install welded-wire reinforcement in longest practicable lengths on bar supports spaced to minimize sagging. Lap edges and ends of adjoining sheets at least one mesh spacing. Offset laps of adjoining sheet widths to prevent continuous laps in either direction. Lace overlaps with wire.

3.6 JOINTS

A. General: Construct joints true to line with faces perpendicular to surface plane of concrete.

B. Construction Joints: Install so strength and appearance of concrete are not impaired, at locations indicated or as approved by Architect.

1. Place joints perpendicular to main reinforcement. Continue reinforcement across construction joints unless otherwise indicated. Do not continue reinforcement through sides of strip placements of floors and slabs.
2. Form keyed joints as indicated. Embed keys at least 1-1/2 inches (38 mm) into concrete.

3. Locate joints for beams, slabs, joists, and girders in the middle third of spans. Offset joints in girders a minimum distance of twice the beam width from a beam-girder intersection.
4. Use a bonding agent at locations where fresh concrete is placed against hardened or partially hardened concrete surfaces.
5. Use epoxy-bonding adhesive at locations where fresh concrete is placed against hardened or partially hardened concrete surfaces.

C. Contraction Joints in Slabs-on-Grade: Form weakened-plane contraction joints, sectioning concrete into areas as indicated. Construct contraction joints for a depth equal to at least one-fourth of concrete thickness as follows:
1. Sawed Joints: Form contraction joints with power saws equipped with shatterproof abrasive or diamond-rimmed blades. Cut 1/8-inch- (3.2-mm-) wide joints into concrete when cutting action does not tear, abrade, or otherwise damage surface and before concrete develops random contraction cracks.

D. Isolation Joints in Slabs-on-Grade: After removing formwork, install joint-filler strips at slab junctions with vertical surfaces, such as column pedestals, foundation walls, grade beams, and other locations, as indicated.

1. Extend joint-filler strips full width and depth of joint, terminating flush with finished concrete surface unless otherwise indicated.
2. Terminate full-width joint-filler strips not less than 1/2 inch (13 mm) or more than 1 inch (25 mm) below finished concrete surface where joint sealants, specified in Section 079200 "Joint Sealants," are indicated.
3. Install joint-filler strips in lengths as long as practicable. Where more than one length is required, lace or clip sections together.

3.7 WATERSTOP INSTALLATION

A. Flexible Waterstops: Install in construction joints and at other joints indicated to form a continuous diaphragm. Install in longest lengths practicable. Support and protect exposed waterstops during progress of the Work. Field fabricate joints in waterstops according to manufacturer's written instructions.

B. Self-Expanding Strip Waterstops: Install in construction joints and at other locations indicated, according to manufacturer's written instructions, adhesive bonding, mechanically fastening, and firmly pressing into place. Install in longest lengths practicable.

3.8 CONCRETE PLACEMENT

A. Before placing concrete, verify that installation of formwork, reinforcement, and embedded items is complete and that required inspections are completed.

B. Do not add water to concrete during delivery, at Project site, or during placement unless approved by Architect.

C. Before test sampling and placing concrete, water may be added at Project site, subject to limitations of ACI 301 (ACI 301M).

1. Do not add water to concrete after adding high-range water-reducing admixtures to mixture.

D. Deposit concrete continuously in one layer or in horizontal layers of such thickness that no new concrete is placed on concrete that has hardened enough to cause seams or planes of weakness. If a section cannot be placed continuously, provide construction joints as indicated. Deposit concrete to avoid segregation.

1. Deposit concrete in horizontal layers of depth not to exceed formwork design pressures and in a manner to avoid inclined construction joints.
2. Consolidate placed concrete with mechanical vibrating equipment according to ACI 301 (ACI 301M).
3. Do not use vibrators to transport concrete inside forms. Insert and withdraw vibrators vertically at uniformly spaced locations to rapidly penetrate placed layer and at least 6 inches (150 mm) into preceding layer. Do not insert vibrators into lower layers of concrete that have begun to lose plasticity. At each insertion, limit duration of vibration to time necessary to consolidate concrete and complete embedment of reinforcement and other embedded items without causing mixture constituents to segregate.

E. Deposit and consolidate concrete for floors and slabs in a continuous operation, within limits of construction joints, until placement of a panel or section is complete.

1. Consolidate concrete during placement operations, so concrete is thoroughly worked around reinforcement and other embedded items and into corners.
2. Maintain reinforcement in position on chairs during concrete placement.
3. Screed slab surfaces with a straightedge and strike off to correct elevations.
4. Slope surfaces uniformly to drains where required.
5. Begin initial floating using bull floats or darbies to form a uniform and open-textured surface plane, before excess bleedwater appears on the surface. Do not further disturb slab surfaces before starting finishing operations.

3.9 FINISHING FORMED SURFACES

A. Rough-Formed Finish: As-cast concrete texture imparted by form-facing material with tie holes and defects repaired and patched. Remove fins and other projections that exceed specified limits on formed-surface irregularities.

1. Apply to concrete surfaces not exposed to public view.

B. Related Unformed Surfaces: At tops of walls, horizontal offsets, and similar unformed surfaces adjacent to formed surfaces, strike off smooth and finish with a texture matching adjacent formed surfaces. Continue final surface treatment of formed surfaces uniformly across adjacent unformed surfaces unless otherwise indicated.

3.10 FINISHING FLOORS AND SLABS

A. General: Comply with ACI 302.1R recommendations for screeding, restraightening, and finishing operations for concrete surfaces. Do not wet concrete surfaces.

B. Scratch Finish: While still plastic, texture concrete surface that has been screeded and bull-floated or darbied. Use stiff brushes, brooms, or rakes to produce a profile amplitude of 1/4 inch (6 mm) in one direction.

1. Apply scratch finish to surfaces indicated and to receive mortar setting beds for bonded cementitious floor finishes.

C. Float Finish: Consolidate surface with power-driven floats or by hand floating if area is small or inaccessible to power-driven floats. Restraighten, cut down high spots, and fill low spots. Repeat float passes and restraightening until surface is left with a uniform, smooth, granular texture.

1. Apply float finish to surfaces indicated, to receive trowel finish and to be covered with fluid-applied or sheet waterproofing, built-up or membrane roofing, or sand-bed terrazzo.

D. Trowel Finish: After applying float finish, apply first troweling and consolidate concrete by hand or power-driven trowel. Continue troweling passes and restraighten until surface is free of trowel marks and uniform in texture and appearance. Grind smooth any surface defects that would telegraph through applied coatings or floor coverings.

1. Apply a trowel finish to surfaces exposed to view or to be covered with resilient flooring, carpet, ceramic or quarry tile set over a cleavage membrane, paint, or another thin-film-finish coating system.
2. Finish surfaces to the following tolerances, according to ASTM E 1155 (ASTM E 1155M), for a randomly trafficked floor surface:

a. Specified overall values of flatness, F(F) 25; and of levelness, F(L) 20; with minimum local values of flatness, F(F) 17; and of levelness, F(L) 15.

E. Trowel and Fine-Broom Finish: Apply a first trowel finish to surfaces where ceramic or quarry tile is to be installed by either thickset or thinset method. While concrete is still plastic, slightly scarify surface with a fine broom.

1. Comply with flatness and levelness tolerances for trowel-finished floor surfaces.

F. Broom Finish: Apply a broom finish to exterior concrete platforms, steps, ramps, and elsewhere as indicated.

1. Immediately after float finishing, slightly roughen trafficked surface by brooming with fiber-bristle broom perpendicular to main traffic route. Coordinate required final finish with Architect before application.

3.11 MISCELLANEOUS CONCRETE ITEM INSTALLATION

A. Filling In: Fill in holes and openings left in concrete structures after work of other trades is in place unless otherwise indicated. Mix, place, and cure concrete, as specified, to blend with in-place construction. Provide other miscellaneous concrete filling indicated or required to complete the Work.

B. Curbs: Provide monolithic finish to interior curbs by stripping forms while concrete is still green and by steel-troweling surfaces to a hard, dense finish with corners, intersections, and terminations slightly rounded.

C. Equipment Bases and Foundations:

1. Coordinate sizes and locations of concrete bases with actual equipment provided.
2. Construct concrete bases [**4 inches (100 mm)**] [**6 inches (150 mm)**] [**8 inches (200 mm)**] <**Insert dimension**> high unless otherwise indicated, and extend base not less than 6 inches (150 mm) in each direction beyond the maximum dimensions of supported equipment unless otherwise indicated or unless required for seismic anchor support.
3. Minimum Compressive Strength: [**5000 psi (34.5 MPa)**] [**4500 psi (31 MPa)**] [**4000 psi (27.6 MPa)**] [**3500 psi (24.1 MPa)**] [**3000 psi (20.7 MPa)**] <**Insert value**> at 28 days.
4. Install dowel rods to connect concrete base to concrete floor. Unless otherwise indicated, install dowel rods on 18-inch (450-mm) centers around the full perimeter of concrete base.
5. For supported equipment, install epoxy-coated anchor bolts that extend through concrete base and anchor into structural concrete substrate.
6. Prior to pouring concrete, place and secure anchorage devices. Use setting drawings, templates, diagrams, instructions, and directions furnished with items to be embedded.
7. Cast anchor-bolt insert into bases. Install anchor bolts to elevations required for proper attachment to supported equipment.

D. Steel Pan Stairs: Provide concrete fill for steel pan stair treads, landings, and associated items. Cast-in inserts and accessories as shown on Drawings. Screed, tamp, and trowel finish concrete surfaces.

3.12 CONCRETE PROTECTING AND CURING

A. General: Protect freshly placed concrete from premature drying and excessive cold or hot temperatures. Comply with ACI 306.1 for cold-weather protection and ACI 305.1 (ACI 305.1M) for hot-weather protection during curing.

B. Evaporation Retarder: Apply evaporation retarder to unformed concrete surfaces if hot, dry, or windy conditions cause moisture loss approaching 0.2 lb/sq. ft. x h (1 kg/sq. m x h) before and during finishing operations. Apply according to manufacturer's written instructions after placing, screeding, and bull floating or darbying concrete, but before float finishing.

C. Formed Surfaces: Cure formed concrete surfaces, including underside of beams, supported slabs, and other similar surfaces. If forms remain during curing period, moist cure after loosening forms. If removing forms before end of curing period, continue curing for remainder of curing period.

D. Unformed Surfaces: Begin curing immediately after finishing concrete. Cure unformed surfaces, including floors and slabs, concrete floor toppings, and other surfaces.

E. Cure concrete according to ACI 308.1, by one or a combination of the following methods:

1. Moisture Curing: Keep surfaces continuously moist for not less than seven days with the following materials:

a. Water.
b. Continuous water-fog spray.
c. Absorptive cover, water saturated, and kept continuously wet. Cover concrete surfaces and edges with 12-inch (300-mm) lap over adjacent absorptive covers.

2. Moisture-Retaining-Cover Curing: Cover concrete surfaces with moisture-retaining cover for curing concrete, placed in widest practicable width, with sides and ends lapped at least 12 inches (300 mm), and sealed by waterproof tape or adhesive. Cure for not less than seven days. Immediately repair any holes or tears during curing period, using cover material and waterproof tape.

   a. Moisture cure or use moisture-retaining covers to cure concrete surfaces to receive floor coverings.
   b. Moisture cure or use moisture-retaining covers to cure concrete surfaces to receive penetrating liquid floor treatments.
   c. Cure concrete surfaces to receive floor coverings with either a moisture-retaining cover or a curing compound that the manufacturer certifies does not interfere with bonding of floor covering used on Project.

3. Curing Compound: Apply uniformly in continuous operation by power spray or roller according to manufacturer's written instructions. Recoat areas subjected to heavy rainfall within three hours after initial application. Maintain continuity of coating and repair damage during curing period.

   a. Removal: After curing period has elapsed, remove curing compound without damaging concrete surfaces by method recommended by curing compound manufacturer unless manufacturer certifies curing compound does not interfere with bonding of floor covering used on Project.

4. Curing and Sealing Compound: Apply uniformly to floors and slabs indicated in a continuous operation by power spray or roller according to manufacturer's written instructions. Recoat areas subjected to heavy rainfall within three hours after initial application. Repeat process 24 hours later and apply a second coat. Maintain continuity of coating and repair damage during curing period.

3.13 LIQUID FLOOR TREATMENT APPLICATION

A. Penetrating Liquid Floor Treatment: Prepare, apply, and finish penetrating liquid floor treatment according to manufacturer's written instructions.

   1. Remove curing compounds, sealers, oil, dirt, laitance, and other contaminants and complete surface repairs.
   2. Do not apply to concrete that is less than 28 days old.
   3. Apply liquid until surface is saturated, scrubbing into surface until a gel forms; rewet; and repeat brooming or scrubbing. Rinse with water; remove excess material until surface is dry. Apply a second coat in a similar manner if surface is rough or porous.

B. Sealing Coat: Uniformly apply a continuous sealing coat of curing and sealing compound to hardened concrete by power spray or roller according to manufacturer's written instructions.

3.14 JOINT FILLING

A. Prepare, clean, and install joint filler according to manufacturer's written instructions.

1. Defer joint filling until concrete has aged at least one month(s). Do not fill joints until construction traffic has permanently ceased.

B. Remove dirt, debris, saw cuttings, curing compounds, and sealers from joints; leave contact faces of joints clean and dry.

C. Install semirigid joint filler full depth in saw-cut joints and at least 2 inches (50 mm) deep in formed joints. Overfill joint and trim joint filler flush with top of joint after hardening.

3.15 CONCRETE SURFACE REPAIRS

A. Defective Concrete: Repair and patch defective areas when approved by Architect. Remove and replace concrete that cannot be repaired and patched to Architect's approval.

B. Patching Mortar: Mix dry-pack patching mortar, consisting of 1 part portland cement to 2-1/2 parts fine aggregate passing a No. 16 (1.18-mm) sieve, using only enough water for handling and placing.

C. Repairing Unformed Surfaces: Test unformed surfaces, such as floors and slabs, for finish and verify surface tolerances specified for each surface. Correct low and high areas. Test surfaces sloped to drain for trueness of slope and smoothness; use a sloped template.

1. Repair finished surfaces containing defects. Surface defects include spalls, popouts, honeycombs, rock pockets, crazing and cracks in excess of 0.01 inch (0.25 mm) wide or that penetrate to reinforcement or completely through unreinforced sections regardless of width, and other objectionable conditions.
2. After concrete has cured at least 14 days, correct high areas by grinding.
3. Correct localized low areas during or immediately after completing surface finishing operations by cutting out low areas and replacing with patching mortar. Finish repaired areas to blend into adjacent concrete.
4. Correct other low areas scheduled to receive floor coverings with a repair underlayment. Prepare, mix, and apply repair underlayment and primer according to manufacturer's written instructions to produce a smooth, uniform, plane, and level surface. Feather edges to match adjacent floor elevations.
5. Correct other low areas scheduled to remain exposed with a repair topping. Cut out low areas to ensure a minimum repair topping depth of 1/4 inch (6 mm) to match adjacent floor elevations. Prepare, mix, and apply repair topping and primer according to manufacturer's written instructions to produce a smooth, uniform, plane, and level surface.
6. Repair defective areas, except random cracks and single holes 1 inch (25 mm) or less in diameter, by cutting out and replacing with fresh concrete. Remove defective areas with clean, square cuts and expose steel reinforcement with at least a 3/4-inch (19-mm) clearance all around. Dampen concrete surfaces in contact with patching concrete and apply bonding agent. Mix patching concrete of same materials and mixture as original concrete, except without coarse aggregate. Place, compact, and finish to blend with adjacent finished concrete. Cure in same manner as adjacent concrete.

7. Repair random cracks and single holes 1 inch (25 mm) or less in diameter with patching mortar. Groove top of cracks and cut out holes to sound concrete and clean off dust, dirt, and loose particles. Dampen cleaned concrete surfaces and apply bonding agent. Place patching mortar before bonding agent has dried. Compact patching mortar and finish to match adjacent concrete. Keep patched area continuously moist for at least 72 hours.

D. Perform structural repairs of concrete, subject to Architect's approval, using epoxy adhesive and patching mortar.

E. Repair materials and installation not specified above may be used, subject to Architect's approval.

3.16 FIELD QUALITY CONTROL

A. Special Inspections: Owner will engage a special inspector and qualified testing and inspecting agency to perform field tests and inspections and prepare test reports.

B. Inspections:

1. Steel reinforcement placement.
2. Steel reinforcement welding.
3. Headed bolts and studs.
4. Verification of use of required design mixture.
5. Concrete placement, including conveying and depositing.
6. Curing procedures and maintenance of curing temperature.
7. Verification of concrete strength before removal of shores and forms from beams and slabs.

C. Concrete Tests: Testing of composite samples of fresh concrete obtained according to ASTM C 172/C 172M shall be performed according to the following requirements:

1. Testing Frequency: Obtain one composite sample for each day's pour of each concrete mixture exceeding 5 cu. yd. (4 cu. m), but less than 25 cu. yd. (19 cu. m), plus one set for each additional 50 cu. yd. (38 cu. m) or fraction thereof.
2. Testing Frequency: Obtain at least one composite sample for each 100 cu. yd. (76 cu. m) or fraction thereof of each concrete mixture placed each day.

    a. When frequency of testing provides fewer than five compressive-strength tests for each concrete mixture, testing shall be conducted from at least five randomly selected batches or from each batch if fewer than five are used.

3. Slump: ASTM C 143/C 143M; one test at point of placement for each composite sample, but not less than one test for each day's pour of each concrete mixture. Perform additional tests when concrete consistency appears to change.
4. Air Content: ASTM C 231/C 231M, pressure method, for normal-weight concrete; one test for each composite sample, but not less than one test for each day's pour of each concrete mixture.
5. Concrete Temperature: ASTM C 1064/C 1064M; one test hourly when air temperature is 40 deg F (4.4 deg C) and below or 80 deg F (27 deg C) and above, and one test for each composite sample.

6. Unit Weight: ASTM C 567/C 567M, fresh unit weight of structural lightweight concrete; one test for each composite sample, but not less than one test for each day's pour of each concrete mixture.
7. Compression Test Specimens: ASTM C 31/C 31M.

    a. Cast and laboratory cure two sets of two standard cylinder specimens for each composite sample.
    b. Cast and field cure two sets of two standard cylinder specimens for each composite sample.

8. Compressive-Strength Tests: ASTM C 39/C 39M; test one set of two laboratory-cured specimens at 7 days and one set of two specimens at 28 days.

    a. Test one set of two field-cured specimens at 7 days and one set of two specimens at 28 days.
    b. A compressive-strength test shall be the average compressive strength from a set of two specimens obtained from same composite sample and tested at age indicated.

9. When strength of field-cured cylinders is less than 85 percent of companion laboratory-cured cylinders, Contractor shall evaluate operations and provide corrective procedures for protecting and curing in-place concrete.
10. Strength of each concrete mixture will be satisfactory if every average of any three consecutive compressive-strength tests equals or exceeds specified compressive strength and no compressive-strength test value falls below specified compressive strength by more than 500 psi (3.4 MPa).
11. Test results shall be reported in writing to Architect, concrete manufacturer, and Contractor within 48 hours of testing. Reports of compressive-strength tests shall contain Project identification name and number, date of concrete placement, name of concrete testing and inspecting agency, location of concrete batch in Work, design compressive strength at 28 days, concrete mixture proportions and materials, compressive breaking strength, and type of break for both 7- and 28-day tests.
12. Nondestructive Testing: Impact hammer, sonoscope, or other nondestructive device may be permitted by Architect but will not be used as sole basis for approval or rejection of concrete.
13. Additional Tests: Testing and inspecting agency shall make additional tests of concrete when test results indicate that slump, air entrainment, compressive strengths, or other requirements have not been met, as directed by Architect. Testing and inspecting agency may conduct tests to determine adequacy of concrete by cored cylinders complying with ASTM C 42/C 42M or by other methods as directed by Architect.
14. Additional testing and inspecting, at Contractor's expense, will be performed to determine compliance of replaced or additional work with specified requirements.
15. Correct deficiencies in the Work that test reports and inspections indicate do not comply with the Contract Documents.

END OF SECTION 033000

SECTION 042000 - UNIT MASONRY

PART 1 - GENERAL

1.1 RELATED DOCUMENTS

A. Drawings and general provisions of the Contract, including General and Supplementary Conditions and Division 01 Specification Sections, apply to this Section.

1.2 SUMMARY

A. Section Includes:

1. Concrete masonry units.
2. Decorative concrete masonry units.
3. Clay face brick.
4. Structural clay facing tile.
5. Mortar and grout.
6. Steel reinforcing bars.
7. Masonry-joint reinforcement.
8. Ties and anchors.
9. Embedded flashing.
10. Miscellaneous masonry accessories.
11. Masonry-cell fill.

B. Products Installed but not Furnished under This Section:

1. Cast-stone trim in unit masonry.
2. Steel lintels in unit masonry.
3. Cavity wall insulation.

C. Related Requirements:

1. Section 047300 "Manufactured Stone Masonry" for manufactured stone veneer.
2. Section 051200 "Structural Steel Framing" for installing anchor sections of adjustable masonry anchors for connecting to structural steel frame.
3. Section 072100 "Thermal Insulation" for cavity wall insulation below slab.
4. Section 072736 "Sprayed Foam Air Barrier" for cavity wall insulation and air barrier.
5. Section 076200 "Sheet Metal Flashing and Trim" for sheet metal flashing and for furnishing manufactured reglets installed in masonry joints.

1.3 DEFINITIONS

A. CMU(s): Concrete masonry unit(s).

B. Reinforced Masonry: Masonry containing reinforcing steel in grouted cells.

1.4 PREINSTALLATION MEETINGS

A. Preinstallation Conference: Conduct conference at Project site.

1.5 ACTION SUBMITTALS

A. Product Data: For each type of product.

B. Shop Drawings: For the following:

1. Masonry Units: Show sizes, profiles, coursing, and locations of special shapes.
2. Reinforcing Steel: Detail bending, lap lengths, and placement of unit masonry reinforcing bars. Comply with ACI 315. Show elevations of reinforced walls.
3. Fabricated Flashing: Detail corner units, end-dam units, and other special applications.

C. Samples for Initial Selection:

1. Decorative CMUs, in the form of small-scale units.
2. Clay face brick, in the form of straps of five or more bricks.
3. Glazed structural clay tile.
4. Colored mortar.
5. Weep holes/cavity vents.

D. Samples for Verification: For each type and color of the following:

1. Decorative CMUs.
2. Clay face brick, in the form of straps of five or more bricks.
3. Special brick shapes.
4. Glazed structural clay tile.
5. Pigmented and colored-aggregate mortar. Make Samples using same sand and mortar ingredients to be used on Project.
6. Weep holes and cavity vents.
7. Accessories embedded in masonry.

1.6 INFORMATIONAL SUBMITTALS

A. List of Materials Used in Constructing Mockups: List generic product names together with manufacturers, manufacturers' product names, model numbers, lot numbers, batch numbers, source of supply, and other information as required to identify materials used. Include mix proportions for mortar and grout and source of aggregates.

1. Submittal is for information only. Receipt of list does not constitute approval of deviations from the Contract Documents unless such deviations are specifically brought to the attention of Architect and approved in writing.

B. Qualification Data: For testing agency.

C. Material Certificates: For each type and size of the following:

1. Masonry units.

a. Include material test reports substantiating compliance with requirements.

b. For brick, include size-variation data verifying that actual range of sizes falls within specified tolerances.
c. For exposed brick, include test report for efflorescence according to ASTM C 67.
d. For surface-coated brick, include test report for durability of surface appearance after 50 cycles of freezing and thawing according to ASTM C 67.
e. For masonry units used in structural masonry, include data and calculations establishing average net-area compressive strength of units.

2. Stainless steel flashing and accessories: Defense Federal Acquisition Regulation Supplement compliance.
3. Integral water repellent used in CMUs.
4. Cementitious materials. Include name of manufacturer, brand name, and type.
5. Mortar admixtures.
6. Preblended, dry mortar mixes. Include description of type and proportions of ingredients.
7. Grout mixes. Include description of type and proportions of ingredients.
8. Reinforcing bars.
9. Joint reinforcement.
10. Anchors, ties, and metal accessories.

D. Mix Designs: For each type of mortar and grout. Include description of type and proportions of ingredients.

1. Include test reports for mortar mixes required to comply with property specification. Test according to ASTM C 109/C 109M for compressive strength, ASTM C 1506 for water retention, and ASTM C 91/C 91M for air content.
2. Include test reports, according to ASTM C 1019, for grout mixes required to comply with compressive strength requirement.

E. Cold-Weather and Hot-Weather Procedures: Detailed description of methods, materials, and equipment to be used to comply with requirements.

1.7 QUALITY ASSURANCE

A. Testing Agency Qualifications: Qualified according to ASTM C 1093 for testing indicated.

B. Stainless Steel Metals: Products meeting requirements of Defense Federal Acquisition Regulation Supplement.

C. Sample Panels: Build sample panels to verify selections made under Sample submittals and to demonstrate aesthetic effects. Comply with requirements in Section 014000 "Quality Requirements" for mockups.

1. Build sample panels for each type of exposed unit masonry construction in sizes approximately 48 inches (1200 mm) long by 48 inches (1200 mm) high by full thickness.
2. Build sample panels facing south.
3. Where masonry is to match existing, build panels adjacent and parallel to existing surface.
4. Clean one-half of exposed faces of panels with masonry cleaner indicated.
5. Protect approved sample panels from the elements with weather-resistant membrane.
6. Approval of sample panels is for color, texture, and blending of masonry units; relationship of mortar and sealant colors to masonry unit colors; tooling of joints; aesthetic qualities of workmanship; and other material and construction qualities specifically approved by Architect in writing.

a. If approved by Architect in writing, sample panel may also be reviewed for the following: relationship of mortar and sealant colors to masonry color; tooling of joints; aesthetic qualities of workmanship; and other material and construction qualities.
b. Approval of sample panels does not constitute approval of deviations from the Contract Documents contained in sample panels unless Architect specifically approves such deviations in writing.

D. Mockups: Build mockups to verify selections made under Sample submittals, to demonstrate aesthetic effects, and to set quality standards for materials and execution.

1. Build mockups for typical exterior walls as shown on Drawings in sizes approximately 60 inches (1500 mm) long by 60 inches (1500 mm) high by full thickness, including face and backup wythes and accessories.

a. Include a sealant-filled joint at least 16 inches (400 mm) long in each mockup.
b. Include lower corner of window opening, framed with FRP trim, at upper corner of exterior wall mockup. Make opening approximately 12 inches (300 mm) wide by 16 inches (400 mm) high.
c. Include through-wall flashing installed for a 24-inch (600-mm) length in corner of exterior wall mockup approximately 16 inches (400 mm) down from top of mockup, with a 12-inch (300-mm) length of flashing left exposed to view (omit masonry above half of flashing).
d. Include metal studs, sheathing, air barrier, veneer anchors, flashing, cavity drainage material, and weep holes in exterior masonry-veneer wall mockup.

2. Where masonry is to match existing, erect mockups adjacent and parallel to existing surface.
3. Clean one-half of exposed faces of mockups with masonry cleaner as indicated.
4. Protect accepted mockups from the elements with weather-resistant membrane.
5. Approval of mockups is for color, texture, and blending of masonry units; relationship of mortar and sealant colors to masonry unit colors; tooling of joints; and aesthetic qualities of workmanship.

a. Approval of mockups is also for other material and construction qualities specifically approved by Architect in writing.
b. Approval of mockups does not constitute approval of deviations from the Contract Documents contained in mockups unless Architect specifically approves such deviations in writing.

6. Subject to compliance with requirements, approved mockups may become part of the completed Work if undisturbed at time of Substantial Completion.

1.8 DELIVERY, STORAGE, AND HANDLING

A. Store masonry units on elevated platforms in a dry location. If units are not stored in an enclosed location, cover tops and sides of stacks with waterproof sheeting, securely tied. If units become wet, do not install until they are dry.

B. Store cementitious materials on elevated platforms, under cover, and in a dry location. Do not use cementitious materials that have become damp.

C. Store aggregates where grading and other required characteristics can be maintained and contamination avoided.

D. Deliver preblended, dry mortar mix in moisture-resistant containers. Store preblended, dry mortar mix in delivery containers on elevated platforms in a dry location or in covered weatherproof dispensing silos.

E. Store masonry accessories, including metal items, to prevent corrosion and accumulation of dirt and oil.

1.9 FIELD CONDITIONS

A. Protection of Masonry: During construction, cover tops of walls, projections, and sills with waterproof sheeting at end of each day's work. Cover partially completed masonry when construction is not in progress.

1. Extend cover a minimum of 24 inches (600 mm) down both sides of walls, and hold cover securely in place.
2. Where one wythe of multiwythe masonry walls is completed in advance of other wythes, secure cover a minimum of 24 inches (600 mm) down face next to unconstructed wythe, and hold cover in place.

B. Do not apply uniform floor or roof loads for at least 12 hours and concentrated loads for at least three days after building masonry walls or columns.

C. Stain Prevention: Prevent grout, mortar, and soil from staining the face of masonry to be left exposed or painted. Immediately remove grout, mortar, and soil that come in contact with such masonry.

1. Protect base of walls from rain-splashed mud and from mortar splatter by spreading coverings on ground and over wall surface.
2. Protect sills, ledges, and projections from mortar droppings.
3. Protect surfaces of window and door frames, as well as similar products with painted and integral finishes, from mortar droppings.
4. Turn scaffold boards near the wall on edge at the end of each day to prevent rain from splashing mortar and dirt onto completed masonry.

D. Cold-Weather Requirements: Do not use frozen materials or materials mixed or coated with ice or frost. Do not build on frozen substrates. Remove and replace unit masonry damaged by frost or by freezing conditions. Comply with cold-weather construction requirements contained in TMS 602/ACI 530.1/ASCE 6.

1. Cold-Weather Cleaning: Use liquid cleaning methods only when air temperature is 40 deg F (4 deg C) and higher and will remain so until masonry has dried, but not less than seven days after completing cleaning.

E. Hot-Weather Requirements: Comply with hot-weather construction requirements contained in TMS 602/ACI 530.1/ASCE 6.

PART 2 - PRODUCTS

2.1 MANUFACTURERS

A. Source Limitations for Masonry Units: Obtain exposed masonry units of a uniform texture and color, or a uniform blend within the ranges accepted for these characteristics, from single source from single manufacturer for each product required.

B. Source Limitations for Mortar Materials: Obtain mortar ingredients of a uniform quality, including color for exposed masonry, from single manufacturer for each cementitious component and from single source or producer for each aggregate.

2.2 PERFORMANCE REQUIREMENTS

A. Provide unit masonry that develops indicated net-area compressive strengths at 28 days.

1. Determine net-area compressive strength of masonry from average net-area compressive strengths of masonry units and mortar types (unit-strength method) according to TMS 602/ACI 530.1/ASCE 6.

2.3 UNIT MASONRY, GENERAL

A. Masonry Standard: Comply with TMS 602/ACI 530.1/ASCE 6, except as modified by requirements in the Contract Documents.

B. Defective Units: Referenced masonry unit standards may allow a certain percentage of units to contain chips, cracks, or other defects exceeding limits stated. Do not use units where such defects are exposed in the completed Work.

C. Fire-Resistance Ratings: Comply with requirements for fire-resistance-rated assembly designs indicated.

1. Where fire-resistance-rated construction is indicated, units shall be listed and labeled by a qualified testing agency acceptable to authorities having jurisdiction.

2.4 CONCRETE MASONRY UNITS

A. Shapes: Provide shapes indicated and as follows, with exposed surfaces matching exposed faces of adjacent units unless otherwise indicated.

1. Provide special shapes for lintels, corners, jambs, sashes, movement joints, headers, bonding, and other special conditions.
2. Provide bullnose units for outside corners unless otherwise indicated.

B. Integral Water Repellent: Provide units made with integral water repellent for exposed units.

1. Integral Water Repellent: Liquid polymeric, integral water-repellent admixture that does not reduce flexural bond strength. Units made with integral water repellent, when tested according to ASTM E 514/E 514M as a wall assembly made with mortar containing integral water-repellent manufacturer's mortar additive, with test period extended to 24 hours, shall show no visible water or leaks on the back of test specimen.

C. CMUs: ASTM C 90.

1. Unit Compressive Strength: Provide units with minimum average net-area compressive strength of 2150 psi (14.8 MPa).
2. Density Classification: Normal weight.
3. Size (Width): Manufactured to dimensions 3/8 inch (10 mm) less than nominal dimensions.
4. Exposed Faces: Provide color and texture matching the range represented by Architect's sample.

D. Decorative CMUs: ASTM C 90.

1. Subject to compliance with requirements, provide one of the following:

a. E. Dillon & Company; Premier Line, Ground Series.
b. Trenwyth Industries, an Echelon company; Trendstone.

c. Basis-of-Design: York Building Products; Gemstone.

2. Unit Compressive Strength: Provide units with minimum average net-area compressive strength of 2150 psi (14.8 MPa).
3. Density Classification: Normal weight.
4. Pattern and Texture:

   a. Standard pattern, ground-face finish.

5. Colors and Sizes:

   a. DCMU-1: To match York Gemstone YBP-21, 7-5/8 inches (194 mm) high by 15-5/8 inches (295 mm) long. Provide widths 3-5/8 inches (92 mm), 5-5/8 inches (143 mm), and 7-5/8 inches (194 mm), per wall types.
   b. DCMU-2: To match York Gemstone Putty, 7-5/8 inches (194 mm) high by 15-5/8 inches (295 mm) long. Provide widths 3-5/8 inches (92 mm) and 7-5/8 inches (194 mm), per wall types.
   c. DCMU-3: To match York Gemstone Arctic White, 3-5/8 inches (92 mm) wide by 7-5/8 inches (194 mm) high by 15-5/8 inches (295 mm) long.
   d. DCMU-4: To match York Gemstone YBP-9 7-5/8 inches (194 mm) high by 15-5/8 inches (295 mm) long. Provide widths 3-5/8 inches (92 mm), 5-5/8 inches (143 mm), and 7-5/8 inches (194 mm), per wall types.
   e. Where 7-5/8” wide units are indicated at walls without vertical reinforcing, Contractor may substitute 3-5/8” DCMU and 3-5/8” CMU with collar joints filled solid.

2.5 CONCRETE AND MASONRY LINTELS

A. General: Provide one of the following:

B. Concrete Lintels: ASTM C 1623, matching CMUs in color, texture, and density classification; and with reinforcing bars indicated. Provide lintels with net-area compressive strength not less than that of CMUs.

   1. For use in 6” CMU walls only.

C. Masonry Lintels: Prefabricated or built-in-place masonry lintels made from bond beam CMUs matching adjacent CMUs in color, texture, and density classification, with reinforcing bars placed as indicated and filled with coarse grout. Cure precast lintels before handling and installing. Temporarily support built-in-place lintels until cured.

2.6 BRICK

A. General: Provide shapes indicated and as follows, with exposed surfaces matching finish and color of exposed faces of adjacent units:

   1. For ends of sills and caps and for similar applications that would otherwise expose unfinished brick surfaces, provide units without cores or frogs and with exposed surfaces finished.
   2. Provide special shapes for applications where stretcher units cannot accommodate special conditions, including those at corners, movement joints, bond beams, sashes, and lintels.
   3. Provide special shapes for applications requiring brick of size, form, color, and texture on exposed surfaces that cannot be produced by sawing.
   4. Provide special shapes for applications where shapes produced by sawing would result in sawed surfaces being exposed to view.

B. Clay Face Brick: Facing brick complying with ASTM C 216.

1. Products: Subject to compliance with requirements, provide one of the following:

   a. Belden Brick Company.
   b. Bowerston Shale Company; Dark Red Smooth.
   c. Glen Gery Corporation; Lansdowne Redburn.
   d. Harmar Brick Company; Red Smooth #101.

2. Grade: SW.
3. Type: FBS.
4. Unit Compressive Strength: Provide units with minimum average net-area compressive strength of 10,000 psi (68.95 MPa).
5. Initial Rate of Absorption: Less than 30 g/30 sq. in. (30 g/194 sq. cm) per minute when tested according to ASTM C 67.
6. Efflorescence: Provide brick that has been tested according to ASTM C 67 and is rated "not effloresced."
7. Surface Coating: Brick with colors or textures produced by application of coatings shall withstand 50 cycles of freezing and thawing according to ASTM C 67 with no observable difference in the applied finish when viewed from 10 feet (3 m).
8. Size (Actual Dimensions): 3-5/8 inches (92 mm) wide by 3-5/8 inches (92 mm) high by 11-5/8 inches (295 mm) long.
9. Application: Use where brick is exposed unless otherwise indicated.

2.7 STRUCTURAL CLAY FACING TILE

A. General:

1. Provide solid, multicored, or hollow units, with shape and direction of cores optional unless otherwise indicated.
2. Where reinforced masonry is indicated, provide multicored units designed for use in reinforced, grouted masonry, either with vertical cores and with webs notched to receive horizontal reinforcement, or with horizontal cores and with holes in bed shells for placement of grout and to receive vertical reinforcement.
3. Where indicated for exterior applications, provide units recommended by manufacturer for exterior use in Project's location.
4. Provide special shapes where required for corners, jambs, coved bases, sills, and other special conditions indicated, including applications that cannot be produced by sawing standard units.

   a. Provide bullnose units for outside corners unless otherwise indicated.
   b. Provide coved internal corners.
   c. Provide recessed, coved base units.

5. Where direct application of plaster is indicated or where bonded to backup masonry, provide units with rough, combed, or scored faces.

B. Glazed Structural Clay Facing Tile: ASTM C 126, Grade S (Select), except 8W series may be Grade SS (Select Sized or Ground Edge).

1. Subject to compliance with requirements provide one of the following products:

   a. Elgin Butler Company; Structural Glazed Tile.

2. Sizes and Colors:

a. SGT-1: 8W Series actual face dimensions of 7-5/8 inches (92 mm) high by 15-5/8 inches (295 mm) long by widths indicated.

1) Color: Match Elgin Butler #4350, gloss, unscored.
2) Base, 8” High: 8WSU with 8W2 and 8W4 outside corners and jambs.
3) Base, 8” High at Windows: 8W10 and 8W10A.
4) Location: Typical 8” high base and window sills.

b. SGT-2: 8W Series actual face dimensions of 7-5/8 inches (92 mm) high by 15-5/8 inches (295 mm) long by widths indicated.

1) Color: Match Elgin Butler Polar White #7100, satin, unscored.
2) Base, 8” High: 8W12R and 8W12L.
3) Location: 8” high base at FRP columns.

3. Width: Manufactured to dimensions 3/8 inch (9.5 mm) less than nominal dimensions.
4. Provide Type I (single-faced units) where only one finished face is exposed when units are installed, and Type II (double-faced units) where two opposite finished faces are exposed when units are installed.
5. Provide special units glazed on ends and tops, as well as faces for corners, jambs, sills, pilasters, columns, and other applications indicated, where glazed units are exposed on other surfaces and faces.

2.8 MORTAR AND GROUT MATERIALS

A. Portland Cement: ASTM C 150/C 150M, Type I or II, except Type III may be used for cold-weather construction. Provide natural color or white cement as required to produce mortar color indicated.

1. Alkali content shall not be more than 0.1 percent when tested according to ASTM C 114.

B. Hydrated Lime: ASTM C 207, Type S.

C. Portland Cement-Lime Mix: Packaged blend of portland cement and hydrated lime containing no other ingredients.

D. Mortar Pigments: Natural and synthetic iron oxides and chromium oxides, compounded for use in mortar mixes and complying with ASTM C 979/C 979M. Use only pigments with a record of satisfactory performance in masonry mortar.

E. Colored Cement Products: Packaged blend made from portland cement and hydrated lime and mortar pigments, all complying with specified requirements, and containing no other ingredients.

1. Colored Portland Cement-Lime Mix:

a. Products: Subject to compliance with requirements, provide one of the following:

1) Essroc; Riverton Portland Cement Lime Custom Color.
2) Lafarge North America Inc.; Eaglebond Portland & Lime.
3) Lehigh Hanson; HeidelbergCement Group; Lehigh Custom Color Portland/Lime Cement.

2. Colored Masonry Cement:

a. Products: Subject to compliance with requirements, provide one of the following:

1) Essroc; Brixment-in-Color or Flamingo Color Masonry Cement.
2) Lafarge North America Inc.; U.S. Cement Custom Color Masonry Cement.
3) Lehigh Hanson; HeidelbergCement Group; Lehigh Custom Color Masonry Cement.

3. Subject to compliance with requirements, colored cement product matching DCMU provided by DCMU manufacturer may be submitted for use
4. Color:

   a. Face Brick: flamingo-BRIXMENT, C-380.
   b. DCMU-1: To match DCMU color, as recommended by DCMU manufacturer.
   c. DCMU-2: To match DCMU color, as recommended by DCMU manufacturer.
   d. DCMU-3: To match DCMU color, as recommended by DCMU manufacturer.
   e. DCMU colors match basis-of-design products. If product by another listed manufacturer are provided, Architect may reselect mortar colors to match.

5. Formulate blend as required to produce color indicated or, if not indicated, as selected from manufacturer's standard colors.
6. Pigments shall not exceed 10 percent of portland cement by weight.

F. Aggregate for Mortar: ASTM C 144.

1. For mortar that is exposed to view, use washed aggregate consisting of natural sand or crushed stone.
2. For joints less than 1/4 inch (6 mm) thick, use aggregate graded with 100 percent passing the No. 16 (1.18-mm) sieve.
3. White-Mortar Aggregates: Natural white sand or crushed white stone.
4. Colored-Mortar Aggregates: Natural sand or crushed stone of color necessary to produce required mortar color.

G. Aggregate for Grout: ASTM C 404.

H. Epoxy Pointing Mortar: ASTM C 395, epoxy-resin-based material formulated for use as pointing mortar for glazed or pre-faced masonry units (and approved for such use by manufacturer of units).

1. Color:

   a. SGT: As selected by Architect from manufacturer’s full range of colors.

I. Cold-Weather Admixture: Nonchloride, noncorrosive, accelerating admixture complying with ASTM C 494/C 494M, Type C, and recommended by manufacturer for use in masonry mortar of composition indicated.

J. Water-Repellent Admixture: Liquid water-repellent mortar admixture intended for use with CMUs containing integral water repellent from same manufacturer.

K. Water: Potable.

2.9 REINFORCEMENT

A. Uncoated-Steel Reinforcing Bars: ASTM A 615/A 615M or ASTM A 996/A 996M, Grade 60 (Grade 420).

B. Reinforcing Bar Positioners: Wire units designed to fit into mortar bed joints spanning masonry unit cells and to hold reinforcing bars in center of cells. Units are formed from 0.148-inch (3.77-mm) steel wire, hot-dip galvanized after fabrication. Provide units designed for number of bars indicated.

C. Masonry-Joint Reinforcement, General: ASTM A 951/A 951M.

1. Interior Walls: Hot-dip galvanized carbon steel.
2. Exterior Walls: Hot-dip galvanized carbon steel.
3. Wire Size for Side Rods: 0.148-inch (3.77-mm) diameter.
4. Wire Size for Cross Rods: 0.148-inch (3.77-mm) diameter.
5. Wire Size for Veneer Ties: 0.148-inch (3.77-mm) diameter.
6. Spacing of Cross Rods, Tabs, and Cross Ties: Not more than 16 inches (407 mm) o.c.
7. Provide in lengths of not less than 10 feet (3 m), with prefabricated corner and tee units.

D. Masonry-Joint Reinforcement for Single-Wythe Masonry: Ladder type with single pair of side rods.

E. Masonry-Joint Reinforcement for Multiwythe Masonry:

1. Ladder type with one side rod at each face shell of hollow masonry units more than 4 inches (100 mm) wide, plus one side rod at each wythe of masonry 4 inches (100 mm) wide or less.

   a. Location: Interior walls with multiple wythes of concrete masonry.

2. Tab type, either ladder or truss design, with one side rod at each face shell of backing wythe and with rectangular tabs sized to extend at least halfway through facing wythe, but with at least 5/8-inch (16-mm) cover on outside face.

   a. Location: Interior walls with multiple wythes of concrete and clay masonry

3. Adjustable (two-piece) type, either ladder or truss design, with one side rod at each face shell of backing wythe and with separate adjustable ties with pintle-and-eye connections having a maximum horizontal play of 1/16 inch (1.5 mm) and maximum vertical adjustment of 1-1/4 inches (32 mm). Size ties to extend at least halfway through facing wythe but with at least 5/8-inch (16-mm) cover on outside face.

   a. Location: Exterior walls.

2.10 TIES AND ANCHORS

A. General: Ties and anchors shall extend at least 1-1/2 inches (38 mm) into veneer but with at least a 5/8-inch (16-mm) cover on outside face.

1. Corrugated-metal ties and mesh ties are not acceptable for use in any application.

B. Materials: Provide ties and anchors specified in this article that are made from materials that comply with the following unless otherwise indicated:

1. Hot-Dip Galvanized, Carbon-Steel Wire: ASTM A 82/A 82M, with ASTM A 153/A 153M, Class B-2 coating.
2. Stainless-Steel Wire: ASTM A 580/A 580M, Type 304.
3. Steel Sheet, Galvanized after Fabrication: ASTM A 1008/A 1008M, Commercial Steel, with ASTM A 153/A 153M, Class B coating.
4. Stainless-Steel Sheet: ASTM A 240/A 240M or ASTM A 666, Type 304.
5. Steel Plates, Shapes, and Bars: ASTM A 36/A 36M.

6. Stainless-Steel Bars: ASTM A 276 or ASTM A 666, Type 304.

C. Individual Wire Ties: Rectangular units with closed ends and not less than 4 inches (100 mm) wide.

1. Z-shaped ties with ends bent 90 degrees to provide hooks not less than 2 inches (50 mm) long may be used for masonry constructed from solid units.
2. Where wythes do not align or are of different materials, use adjustable ties with pintle-and-eye connections having a maximum adjustment of 1-1/4 inches (32 mm).
3. Wire: Fabricate from 3/16-inch- (4.76-mm-) diameter, hot-dip galvanized steel wire.

D. Adjustable Anchors for Connecting to Structural Steel Framing: Provide anchors that allow vertical or horizontal adjustment but resist tension and compression forces perpendicular to plane of wall.

1. Anchor Section for Welding to Steel Frame: Crimped 1/4-inch- (6.35-mm-) diameter, hot-dip galvanized steel wire.
2. Tie Section: Triangular-shaped wire tie made from 0.187-inch- (4.76-mm-) diameter, hot-dip galvanized steel wire.

E. Partition Top Anchors: 0.105-inch- (2.66-mm-) thick metal plate with a 3/8-inch- (9.5-mm-) diameter metal rod 6 inches (152 mm) long welded to plate and with closed-end plastic tube fitted over rod that allows rod to move in and out of tube. Fabricate from steel, hot-dip galvanized after fabrication.

F. Rigid Anchors: Fabricate from steel bars 1-1/2 inches (38 mm) wide by 1/4 inch (6.35 mm) thick by 24 inches (610 mm) long, with ends turned up 2 inches (51 mm) or with cross pins unless otherwise indicated.

1. Corrosion Protection: Hot-dip galvanized to comply with ASTM A 153/A 153M.

G. Adjustable Masonry-Veneer Anchors:

1. General: Provide anchors that allow vertical adjustment but resist a 100-lbf (445-N) load in both tension and compression perpendicular to plane of wall without deforming or developing play in excess of 1/16 inch (1.5 mm).
2. Fabricate wire ties from 0.187-inch- (4.76-mm-) diameter, hot-dip galvanized-steel wire unless otherwise indicated.
3. Screw-Attached, Masonry-Veneer Anchors: Wire tie and a rib-stiffened, sheet metal anchor section with screw holes top and bottom, with projecting tabs having holes for inserting vertical legs of wire tie formed to fit anchor section.

   a. Products: Subject to compliance with requirements, provide one of the following:

      1) Hohmann & Barnard, Inc.; HB-213.
      2) Heckman Building Products; #213.
      3) Wire-Bond; RJ-711.

   b. Material: Stainless Steel, type 304, minimum 14 gage.
   c. Wire ties: Double pintel wire tie as recommended in writing by anchor manufacturer.
   d. Locations: Provide at all locations unless otherwise noted.

4. Screw-Attached, Masonry-Veneer Anchors: Wire tie and a sheet metal anchor section.

   a. Products: Subject to compliance with requirements, provide one of the following:

      1) Hohmann & Barnard, Inc.; DW-10.
      2) Hohmann & Barnard, Inc.; 345-BT.

3) Heckmann Building Products; #315-D.
4) Wire-Bond; #1004 Type III.

b. Material: Steel, hot-dipped galvanized after fabrication.
c. Wire ties: Dovetail anchor, 3/16-inch diameter wire.
d. Locations: At interior walls where masonry is veneered over stud backup:

5. Polymer-Coated, Steel Drill Screws for Steel Studs: ASTM C 954 except manufactured with hex washer head and neoprene or EPDM washer, No. 10 (4.83-mm) diameter by length required to penetrate steel stud flange with not less than three exposed threads, and with organic polymer coating with salt-spray resistance to red rust of more than 800 hours according to ASTM B 117.

a. Locations: Interior screw-attached, masonry-veneer anchors only.

6. Stainless-Steel Drill Screws for Steel Studs: ASTM C 954 except manufactured with hex washer head and neoprene or EPDM washer, No. 10 (4.83-mm) diameter by length required to penetrate steel stud flange with not less than three exposed threads; either made from Type 410 stainless steel or made with a carbon-steel drill point and 300 Series stainless-steel shank.

a. Locations: All locations unless otherwise noted.

2.11 EMBEDDED FLASHING MATERIALS

A. Metal Flashing: Provide metal flashing complying with SMACNA's "Architectural Sheet Metal Manual," Section 076200 "Sheet Metal Flashing and Trim," and as follows:

1. Stainless Steel: ASTM A 240/A 240M or ASTM A 666, Type 304, 0.016 inch (0.40 mm) thick.
2. Fabricate continuous flashings in sections 96 inches (2400 mm) long minimum, but not exceeding 12 feet (3.7 m). Provide splice plates at joints of formed, smooth metal flashing.
3. Fabricate through-wall flashing with snaplock receiver on exterior face where indicated to receive counterflashing.
4. Fabricate through-wall flashing with drip edge unless otherwise indicated. Fabricate by extending flashing 1/2 inch (13 mm) out from wall, with outer edge bent down 30 degrees and hemmed.
5. Fabricate metal drip edges from stainless steel. Extend at least 3 inches (76 mm) into wall and 1/2 inch (13 mm) out from wall, with outer edge bent down 30 degrees and hemmed.
6. Solder metal items at corners.

B. Flexible Flashing: Use the following unless otherwise indicated:

1. Stainless Steel Fabric Flashing: 0.003 inch thick, type 304 stainless steel sheet coated with flexible polymeric fabric. Use only where flashing is fully concealed in masonry.

a. Products: Subject to compliance with requirements, provide one of the following:

1) Hohmann & Barnard, Inc.; Mighty-Flash.
2) Illinois Products, Inc.; IPCO Stainless Steel Fabric Flashing.
3) Prosoco, Inc.; R-Guard SS ThruWall.
4) STS Coatings, Inc.; Wall Guardian Stainless Steel TWF.
5) TK Products, Inc.; TK-SS Flashing.
6) York Manufacturing, Inc.; Multi-Flash SS.

C. Application: Unless otherwise indicated, use the following:

1. Where flashing is indicated to receive counterflashing, use metal flashing.

2. Where flashing is indicated to be turned down at or beyond the wall face, use metal flashing.
3. Where flashing is partly exposed and is indicated to terminate at the wall face, use metal flashing or flexible flashing with a metal drip edge or snaplock receiver where noted.
4. Where flashing is fully concealed, use metal flashing or flexible flashing.

D. Single-Wythe CMU Flashing System: System of CMU cell flashing pans and interlocking CMU web covers made from UV-resistant, high-density polyethylene. Cell flashing pans have integral weep spouts designed to be built into mortar bed joints and that extend into the cell to prevent clogging with mortar.

E. Solder and Sealants for Sheet Metal Flashings:

1. Solder for Stainless Steel: ASTM B 32, Grade Sn96, with acid flux of type recommended by stainless-steel sheet manufacturer.
2. Elastomeric Sealant: ASTM C 920, chemically curing silicone sealant; of type, grade, class, and use classifications required to seal joints in sheet metal flashing and remain watertight.

F. Adhesives, Primers, and Seam Tapes for Flashings: Flashing manufacturer's standard products or products recommended by flashing manufacturer for bonding flashing sheets to each other and to substrates.

G. Termination Bars for Flexible Flashing: Stainless steel bars 1/8 inch by 1 inch (3 mm by 25 mm).

H. Termination Bars for Flexible Flashing: Stainless-steel sheet 0.019 inch by 1-1/2 inches (0.48 mm by 38 mm) with a 3/8 inch (10-mm) sealant flange at top.

2.12 MISCELLANEOUS MASONRY ACCESSORIES

A. Compressible Filler: Premolded filler strips complying with ASTM D 1056, Grade 2A1; compressible up to 35 percent; of width and thickness indicated; formulated from neoprene.

B. Preformed Control-Joint Gaskets: Made from styrene-butadiene-rubber compound, complying with ASTM D 2000, Designation M2AA-805 and designed to fit standard sash block and to maintain lateral stability in masonry wall; size and configuration as indicated.

C. Bond-Breaker Strips: Asphalt-saturated felt complying with ASTM D 226/D 226M, Type I (No. 15 asphalt felt).

D. Weep/Cavity Vent Products: Use the following unless otherwise indicated:

1. Cellular Plastic Weep/Vent: One-piece, flexible extrusion made from UV-resistant polypropylene copolymer, full height and width of head joint and depth 1/8 inch (3 mm) less than depth of outer wythe, in color selected from manufacturer's standard.

a. Products: Subject to compliance with requirements, provide one of the following:

1) Advanced Building Products Inc.; Mortar Maze Cell Vent.
2) Heckmann Building Products, Inc.; No. 85 Cell Vent.
3) Hohmann & Barnard, Inc.; QV Quadro-Vent.
4) Wire-Bond; Cell Vent (#3601).

E. Cavity Drainage Material: Free-draining mesh, made from polymer strands and filter cloth facing that will not degrade within the wall cavity.

a. Advanced Building Products Inc.; Mortairvent CW.

b. Keene Building Products; Cav-air-ator.

2. Configuration: Provide one of the following:

a. Sheets or strips, full depth of cavity and installed to full height of cavity.
b. Sheets or strips not less than 3/4 inch (19 mm) thick and installed to full height of cavity, with additional strips 4 inches (100 mm) high at weep holes and thick enough to fill entire depth of cavity and prevent weep holes from clogging with mortar.

2.13 MASONRY-CELL FILL

A. Loose-Fill Insulation: Perlite complying with ASTM C 549, Type II (surface treated for water repellency and limited moisture absorption) or Type IV (surface treated for water repellency and to limit dust generation).

2.14 MASONRY CLEANERS

A. Proprietary Acidic Cleaner: Manufacturer's standard-strength cleaner designed for removing mortar/grout stains, efflorescence, and other new construction stains from new masonry without discoloring or damaging masonry surfaces. Use product expressly approved for intended use by cleaner manufacturer and manufacturer of masonry units being cleaned.

1. Provide non-acidic cleaner if recommended in writing by manufacturer of masonry units.
2. If multiple cleaner products are recommended by masonry unit manufacturers, each shall be used only on substrates as indicated by manufacturer.

2.15 MORTAR AND GROUT MIXES

A. General: Do not use admixtures, including pigments, air-entraining agents, accelerators, retarders, water-repellent agents, antifreeze compounds, or other admixtures unless otherwise indicated.

1. Do not use calcium chloride in mortar or grout.
2. Use portland cement-lime mortar unless otherwise indicated.
3. For exterior masonry, use portland cement-lime mortar.
4. For reinforced masonry, use portland cement-lime or mortar cement mortar.
5. Add cold-weather admixture (if used) at same rate for all mortar that will be exposed to view, regardless of weather conditions, to ensure that mortar color is consistent.

B. Preblended, Dry Mortar Mix: Furnish dry mortar ingredients in form of a preblended mix. Measure quantities by weight to ensure accurate proportions, and thoroughly blend ingredients before delivering to Project site.

C. Mortar for Unit Masonry: Comply with ASTM C 270, Proportion Specification. Provide the following types of mortar for applications stated unless another type is indicated.

1. For masonry below grade or in contact with earth, use Type M.
2. For reinforced masonry, use Type S or Type N.
3. For mortar parge coats, use Type S or Type N.
4. For exterior, above-grade, load-bearing and nonload-bearing walls and parapet walls; for interior load-bearing walls; for interior nonload-bearing partitions; and for other applications where another type is not indicated, use Type N.

D. Pigmented Mortar: Use colored cement product or select and proportion pigments with other ingredients to produce color required. Do not add pigments to colored cement products.

1. Pigments shall not exceed 10 percent of portland cement by weight.
2. Pigments shall not exceed 5 percent of masonry cement or mortar cement by weight.
3. Mix to match approved sample.
4. Application: Use pigmented mortar for exposed mortar joints with the following units:

a. Decorative CMUs.
b. Clay face brick.

E. Grout for Unit Masonry: Comply with ASTM C 476.

1. Use grout of type indicated or, if not otherwise indicated, of type (fine or coarse) that will comply with TMS 602/ACI 530.1/ASCE 6 for dimensions of grout spaces and pour height.
2. Proportion grout in accordance with ASTM C 476, paragraph 4.2.2 for specified 28-day compressive strength indicated, but not less than 2000 psi (14 MPa).
3. Provide grout with a slump of 8 to 11 inches (200 to 280 mm) as measured according to ASTM C 143/C 143M.

F. Epoxy Pointing Mortar: Mix epoxy pointing mortar to comply with mortar manufacturer's written instructions.

1. Application: Use epoxy pointing mortar for exposed mortar joints with the following units:

a. Glazed structural clay facing tile.

PART 3 - EXECUTION

3.1 EXAMINATION

A. Examine conditions, with Installer present, for compliance with requirements for installation tolerances and other conditions affecting performance of the Work.

1. For the record, prepare written report, endorsed by Installer, listing conditions detrimental to performance of the Work.
2. Verify that foundations are within tolerances specified.
3. Verify that reinforcing dowels are properly placed.
4. Verify that substrates are free of substances that impair mortar bond.

B. Before installation, examine rough-in and built-in construction for piping systems to verify actual locations of piping connections.

C. Proceed with installation only after unsatisfactory conditions have been corrected.

3.2 INSTALLATION, GENERAL

A. Thickness: Build cavity and composite walls and other masonry construction to full thickness shown. Build single-wythe walls to actual widths of masonry units, using units of widths indicated.

B. Build chases and recesses to accommodate items specified in this and other Sections.

C. Leave openings for equipment to be installed before completing masonry. After installing equipment, complete masonry to match construction immediately adjacent to opening.

D. Use full-size units without cutting if possible. If cutting is required to provide a continuous pattern or to fit adjoining construction, cut units with motor-driven saws; provide clean, sharp, unchipped edges. Allow units to dry before laying unless wetting of units is specified. Install cut units with cut surfaces and, where possible, cut edges concealed.

E. Select and arrange units for exposed unit masonry to produce a uniform blend of colors and textures. Mix units from several pallets or cubes as they are placed.

3.3 TOLERANCES

A. Dimensions and Locations of Elements:

1. For dimensions in cross section or elevation, do not vary by more than plus 1/2 inch (12 mm) or minus 1/4 inch (6 mm).
2. For location of elements in plan, do not vary from that indicated by more than plus or minus 1/2 inch (12 mm).
3. For location of elements in elevation, do not vary from that indicated by more than plus or minus 1/4 inch (6 mm) in a story height or 1/2 inch (12 mm) total.

B. Lines and Levels:

1. For bed joints and top surfaces of bearing walls, do not vary from level by more than 1/4 inch in 10 feet (6 mm in 3 m), or 1/2-inch (12-mm) maximum.
2. For conspicuous horizontal lines, such as lintels, sills, parapets, and reveals, do not vary from level by more than 1/8 inch in 10 feet (3 mm in 3 m), 1/4 inch in 20 feet (6 mm in 6 m), or 1/2-inch (12-mm) maximum.
3. For vertical lines and surfaces, do not vary from plumb by more than 1/4 inch in 10 feet (6 mm in 3 m), 3/8 inch in 20 feet (9 mm in 6 m), or 1/2-inch (12-mm) maximum.
4. For conspicuous vertical lines, such as external corners, door jambs, reveals, and expansion and control joints, do not vary from plumb by more than 1/8 inch in 10 feet (3 mm in 3 m), 1/4 inch in 20 feet (6 mm in 6 m), or 1/2-inch (12-mm) maximum.
5. For lines and surfaces, do not vary from straight by more than 1/4 inch in 10 feet (6 mm in 3 m), 3/8 inch in 20 feet (9 mm in 6 m), or 1/2-inch (12-mm) maximum.
6. For vertical alignment of exposed head joints, do not vary from plumb by more than 1/4 inch in 10 feet (6 mm in 3 m), or 1/2-inch (12-mm) maximum.
7. For faces of adjacent exposed masonry units, do not vary from flush alignment by more than 1/16 inch (1.5 mm) except due to warpage of masonry units within tolerances specified for warpage of units.

C. Joints:

1. For bed joints, do not vary from thickness indicated by more than plus or minus 1/8 inch (3 mm), with a maximum thickness limited to 1/2 inch (12 mm).
2. For exposed bed joints, do not vary from bed-joint thickness of adjacent courses by more than 1/8 inch (3 mm).
3. For head and collar joints, do not vary from thickness indicated by more than plus 3/8 inch (9 mm) or minus 1/4 inch (6 mm).
4. For exposed head joints, do not vary from thickness indicated by more than plus or minus 1/8 inch (3 mm). Do not vary from adjacent bed-joint and head-joint thicknesses by more than 1/8 inch (3 mm).

5. For exposed bed joints and head joints of stacked bond, do not vary from a straight line by more than 1/16 inch (1.5 mm) from one masonry unit to the next.

3.4 LAYING MASONRY WALLS

A. Lay out walls in advance for accurate spacing of surface bond patterns with uniform joint thicknesses and for accurate location of openings, movement-type joints, returns, and offsets. Avoid using less-than-half-size units, particularly at corners, jambs, and, where possible, at other locations.

B. Bond Pattern for Exposed Masonry: Unless otherwise indicated, lay exposed masonry in Flemish bond; do not use units with less-than-nominal 4-inch (100-mm) horizontal face dimensions at corners or jambs.

C. Lay concealed masonry with all units in a wythe in running bond or bonded by lapping not less than 4 inches (100 mm). Bond and interlock each course of each wythe at corners. Do not use units with less-than-nominal 4-inch (100-mm) horizontal face dimensions at corners or jambs.

D. Stopping and Resuming Work: Stop work by stepping back units in each course from those in course below; do not tooth. When resuming work, clean masonry surfaces that are to receive mortar, remove loose masonry units and mortar, and wet brick if required before laying fresh masonry.

E. Built-in Work: As construction progresses, build in items specified in this and other Sections. Fill in solidly with masonry around built-in items.

F. Where built-in items are to be embedded in cores of hollow masonry units, place a layer of metal lath, wire mesh, or plastic mesh in the joint below, and rod mortar or grout into core.

G. Fill cores in hollow CMUs with grout 24 inches (600 mm) under bearing plates, beams, lintels, posts, and similar items unless otherwise indicated.

H. Build nonload-bearing interior partitions full height of story to underside of solid floor or roof structure above unless otherwise indicated.

1. Install compressible filler in joint between top of partition and underside of structure above.
2. Fasten partition top anchors to structure above and build into top of partition. Grout cells of CMUs solidly around plastic tubes of anchors and push tubes down into grout to provide 1/2-inch (13-mm) clearance between end of anchor rod and end of tube. Space anchors 48 inches (1200 mm) o.c. unless otherwise indicated.
3. Wedge nonload-bearing partitions against structure above with small pieces of tile, slate, or metal. Fill joint with mortar after dead-load deflection of structure above approaches final position.
4. At fire-rated partitions, treat joint between top of partition and underside of structure above to comply with Section 078443 "Joint Firestopping."

3.5 MORTAR BEDDING AND JOINTING

A. Lay CMUs as follows:

1. Bed face shells in mortar and make head joints of depth equal to bed joints.
2. Bed webs in mortar in all courses of piers, columns, and pilasters.
3. Bed webs in mortar in grouted masonry, including starting course on footings.
4. Fully bed entire units, including areas under cells, at starting course on footings where cells are not grouted.
5. Fully bed units and fill cells with mortar at anchors and ties as needed to fully embed anchors and ties in mortar.

B. Lay solid masonry units with completely filled bed and head joints; butter ends with sufficient mortar to fill head joints and shove into place. Do not deeply furrow bed joints or slush head joints.

C. Lay structural clay tile as follows:

1. Lay vertical-cell units with full head joints unless otherwise indicated. Provide bed joints with full mortar coverage on face shells and webs.
2. Lay horizontal-cell units with full bed joints unless otherwise indicated. Keep drainage channels, if any, free of mortar. Form head joints with sufficient mortar so excess will be squeezed out as units are placed in position. Butter both sides of units to be placed, or butter one side of unit already in place and one side of unit to be placed.
3. Maintain joint thicknesses indicated except for minor variations required to maintain bond alignment. If not indicated, lay walls with 1/4- to 3/8-inch- (6- to 10-mm-) thick joints.

D. Set cast-stone trim units in full bed of mortar with full vertical joints. Fill dowel, anchor, and similar holes.

1. Clean soiled surfaces with fiber brush and soap powder and rinse thoroughly with clear water.
2. Wet joint surfaces thoroughly before applying mortar.
3. Rake out mortar joints for pointing with sealant.

E. Rake out mortar joints at glazed structural clay tile to a uniform depth of 1/4 inch (6 mm) and point with epoxy mortar to comply with epoxy-mortar manufacturer's written instructions.

F. Tool exposed joints slightly concave when thumbprint hard, using a jointer larger than joint thickness unless otherwise indicated.

1. For glazed masonry units, use a nonmetallic jointer 3/4 inch (19 mm) or more in width.

G. Cut joints flush for masonry walls to receive plaster or other direct-applied finishes (other than paint) unless otherwise indicated.

H. Cut joints flush where indicated to receive spray foam air barriers unless otherwise indicated.

3.6 COMPOSITE MASONRY

A. Bond wythes of composite masonry together as follows:

1. Individual Metal Ties: Provide ties as shown installed in horizontal joints, but not less than one metal tie for 1.77 sq. ft. (0.16 sq. m) of wall area spaced not to exceed 16 inches (406 mm) o.c. horizontally and 16 inches (406 mm) o.c. vertically. Stagger ties in alternate courses. Provide additional ties within 12 inches (305 mm) of openings and space not more than 36 inches (914 mm) apart around perimeter of openings. At intersecting and abutting walls, provide ties at no more than 24 inches (610 mm) o.c. vertically.

   a. Where bed joints of wythes do not align, use adjustable-type (two-piece-type) ties.

2. Masonry-Joint Reinforcement: Installed in horizontal mortar joints.

   a. Where bed joints of both wythes align, use ladder-type reinforcement extending across both wythes.
   b. Where bed joints of wythes do not align, use adjustable-type (two-piece-type) reinforcement.

B. Collar Joints: Solidly fill collar joints by parging face of first wythe that is laid and shoving units of other wythe into place.

C. Collar Joints in Clay Tile Masonry: After each course is laid, fill the vertical, longitudinal joint between wythes solidly with mortar at interior walls and partitions.

D. Corners: Provide interlocking masonry unit bond in each wythe and course at corners unless otherwise indicated.

1. Provide continuity with masonry-joint reinforcement at corners by using prefabricated L-shaped units as well as masonry bonding.

E. Intersecting and Abutting Walls: Unless vertical expansion or control joints are shown at juncture, bond walls together as follows:

1. Provide continuity with masonry-joint reinforcement by using prefabricated T-shaped units.
2. Provide rigid metal anchors not more than 24 inches (610 mm) o.c. If used with hollow masonry units, embed ends in mortar-filled cores.

3.7 CAVITY WALLS

A. Bond wythes of cavity walls together using one of the following methods:

1. Individual Metal Ties: Provide ties as shown installed in horizontal joints, but not less than one metal tie for 1.77 sq. ft. (0.16 sq. m) of wall area spaced not to exceed 16 inches (406 mm) o.c. horizontally and 16 inches (406 mm) o.c. vertically. Stagger ties in alternate courses. Provide additional ties within 12 inches (305 mm) of openings and space not more than 36 inches (915 mm) apart around perimeter of openings. At intersecting and abutting walls, provide ties at no more than 24 inches (610 mm) o.c. vertically.

a. Use adjustable-type (two-piece-type) ties.

2. Masonry-Joint Reinforcement: Installed in horizontal mortar joints.

a. Use adjustable-type (two-piece-type) reinforcement to allow for differential movement regardless of whether bed joints align.

3. Masonry-Veneer Anchors: Comply with requirements for anchoring masonry veneers.

B. Bond wythes of cavity walls together using bonding system indicated on Drawings.

C. Keep cavities clean of mortar droppings and other materials during construction. Bevel beds away from cavity, to minimize mortar protrusions into cavity. Do not attempt to trowel or remove mortar fins protruding into cavity.

D. Installing Cavity Wall Insulation: Place small dabs of adhesive, spaced approximately 12 inches (300 mm) o.c. both ways, on inside face of insulation boards, or attach with plastic fasteners designed for this purpose. Fit courses of insulation between wall ties and other confining obstructions in cavity, with edges butted tightly both ways. Press units firmly against inside wythe of masonry or other construction as shown.

1. Fill cracks and open gaps in insulation with crack sealer compatible with insulation and masonry.

3.8 ANCHORED MASONRY VENEERS

A. Anchor masonry veneers to wall framing with masonry-veneer anchors to comply with the following requirements:

1. Fasten screw-attached anchors through sheathing to wall framing with metal fasteners of type indicated. Use two fasteners unless anchor design only uses one fastener.
2. Embed tie sections in masonry joints.
3. Locate anchor sections to allow maximum vertical differential movement of ties up and down.
4. Space anchors as indicated, but not more than 16 inches (406 mm) o.c. vertically and 16 inches (406 mm) o.c. horizontally, with not less than one anchor for each 1.77 sq. ft. (0.16 sq. m) of wall area. Install additional anchors within 12 inches (305 mm) of openings and at intervals, not exceeding 24 inches (610 mm), around perimeter.

B. Provide not less than 1-1/2 inch (25 mm) of airspace between back of masonry veneer and face of spray foam air barrier.

1. Keep airspace clean of mortar droppings and other materials during construction. Bevel beds away from airspace, to minimize mortar protrusions into airspace. Do not attempt to trowel or remove mortar fins protruding into airspace.

3.9 MASONRY-CELL FILL

A. Pour loose-fill insulation into cavities to fill void spaces. Maintain inspection ports to show presence of fill at extremities of each pour area. Close the ports after filling has been confirmed. Limit the fall of fill to one story high, but not more than 20 feet (6 m).

3.10 MASONRY-JOINT REINFORCEMENT

A. General: Install entire length of longitudinal side rods in mortar with a minimum cover of 5/8 inch (16 mm) on exterior side of walls, 1/2 inch (13 mm) elsewhere. Lap reinforcement a minimum of 6 inches (150 mm).

1. Space reinforcement not more than 16 inches (406 mm) o.c.
2. Space reinforcement not more than 8 inches (203 mm) o.c. in foundation walls and parapet walls.
3. Provide reinforcement not more than 8 inches (203 mm) above and below wall openings and extending 12 inches (305 mm) beyond openings.

B. Interrupt joint reinforcement at control and expansion joints unless otherwise indicated.

C. Provide continuity at wall intersections by using prefabricated T-shaped units.

D. Provide continuity at corners by using prefabricated L-shaped units.

E. Rigid anchors may be provided for continuity at wall intersections and corners in lieu of prefabricated T-shaped and L-shaped units

F. Cut and bend reinforcing units as directed by manufacturer for continuity at corners, returns, offsets, column fireproofing, pipe enclosures, and other special conditions.

3.11 ANCHORING MASONRY TO STRUCTURAL STEEL AND CONCRETE

A. Anchor masonry to structural steel and concrete, where masonry abuts or faces structural steel or concrete, to comply with the following:

1. Provide an open space not less than 1/2 inch (13 mm) wide between masonry and structural steel or concrete unless otherwise indicated. Keep open space free of mortar and other rigid materials.
2. Anchor masonry with anchors embedded in masonry joints and attached to structure.
3. Space anchors as indicated, but not more than 24 inches (610 mm) o.c. vertically and 36 inches (915 mm) o.c. horizontally.

3.12 CONTROL AND EXPANSION JOINTS

A. General: Install control- and expansion-joint materials in unit masonry as masonry progresses. Do not allow materials to span control and expansion joints without provision to allow for in-plane wall or partition movement.

B. Spacing: Provide control joints at locations indicated on Drawings. Where joints are not indicated, provide as follows:

1. For CMU walls and partitions, provide control joints per recommendations in NCMA TEK 10-1A “Crack Control in Concrete Masonry” and NCMA TEK 10-2C “Control Joints for Concrete Masonry Walls – Empirical Method.”
2. For CMU veneers, provide control joints per recommendations in NCMA TEK 10-4 “Crack Control for Concrete Brick and Other Concrete Masonry Veneers.”
3. For brick veneer, provide expansion joints per recommendations in BIA Technical Note 18A “Accommodating Expansion of Brickwork” and as shown on Drawings.

C. Form control joints in concrete masonry using one of the following methods:

1. Fit bond-breaker strips into hollow contour in ends of CMUs on one side of control joint. Fill resultant core with grout, and rake out joints in exposed faces for application of sealant.
2. Install preformed control-joint gaskets designed to fit standard sash block.
3. Install interlocking units designed for control joints. Install bond-breaker strips at joint. Keep head joints free and clear of mortar, or rake out joint for application of sealant.
4. Install temporary foam-plastic filler in head joints, and remove filler when unit masonry is complete for application of sealant.

D. Form expansion joints in brick as follows:

1. Form open joint full depth of brick wythe and of width indicated, but not less than 3/8 inch (10 mm) for installation of sealant and backer rod specified in Section 079200 "Joint Sealants."

3.13 LINTELS

A. Install steel lintels where indicated.

B. Provide masonry lintels at 5-5/8 inch thick walls shown without structural steel or other supporting lintels.

C. Where not exposed in finished work and where other lintels are not shown, provide concrete or masonry lintels where openings of more than 12 inches (305 mm) for brick-size units and 24 inches (610 mm) for block-size units are shown without structural steel or other supporting lintels.

D. Provide minimum bearing of 8 inches (200 mm) at each jamb unless otherwise indicated.

3.14 FLASHING, WEEP HOLES, AND CAVITY VENTS

A. General: Install embedded flashing and weep holes in masonry at shelf angles, lintels, ledges, other obstructions to downward flow of water in wall, and where indicated. Install cavity vents at angles, ledges, and other obstructions to upward flow of air in cavities, and where indicated.

B. Install flashing as follows unless otherwise indicated:

1. Prepare masonry surfaces so they are smooth and free from projections that could puncture flashing. Where flashing is within mortar joint, place through-wall flashing on sloping bed of mortar and cover with mortar. Before covering with mortar, seal penetrations in flashing with adhesive, sealant, or tape as recommended by flashing manufacturer.
2. At multiwythe masonry walls, including cavity walls, extend flashing through outer wythe, turned up a minimum of 8 inches (200 mm), and through inner wythe to within 1/2 inch (13 mm) of the interior face of wall in exposed masonry. Where interior face of wall is to receive furring or framing, carry flashing completely through inner wythe and turn flashing up approximately 2 inches (50 mm) on interior face.
3. At multiwythe masonry walls, including cavity walls, extend flashing through outer wythe, turned up a minimum of 8 inches (200 mm), and 1-1/2 inches (38 mm) into the inner wythe. Form 1/4-inch (6-mm) hook in edge of flashing embedded in inner wythe.
4. At masonry-veneer walls, extend flashing through veneer, across airspace behind veneer, and up face of sheathing at least 8 inches (200 mm); with upper edge under spray foam air barrier, lapping at least 4 inches (100 mm). Fasten upper edge of flexible flashing to sheathing through termination bar.
5. At lintels and shelf angles, extend flashing a minimum of 6 inches (150 mm) into masonry at each end. At heads and sills, extend flashing 6 inches (150 mm) at ends and turn up not less than 2 inches (50 mm) to form end dams.
6. Install metal drip edges beneath flexible flashing at exterior face of wall. Stop flexible flashing 1/2 inch (13 mm) back from outside face of wall, and adhere flexible flashing to top of metal drip edge with sealant.
7. Along sidewalks, cut flexible flashing off flush with face of wall after masonry wall construction is completed.

C. Install single-wythe CMU flashing system in bed joints of CMU walls where indicated to comply with manufacturer's written instructions. Install CMU cell pans with upturned edges located below face shells and webs of CMUs above and with weep spouts aligned with face of wall. Install CMU web covers so that they cover upturned edges of CMU cell pans at CMU webs and extend from face shell to face shell.

D. Install weep holes in exterior wythes and veneers in head joints of first course of masonry immediately above embedded flashing.

1. Use specified weep/cavity vent products to form weep holes.
2. Space weep holes 24 inches (600 mm) o.c. unless otherwise indicated.

E. Place grout in cavities to a height equal to height of first course below bottom of base flashing.

F. Place cavity drainage material in airspace behind veneers to comply with configuration requirements for cavity drainage material in "Miscellaneous Masonry Accessories" Article.

G. Install cavity vents in head joints in exterior wythes at spacing indicated. Use specified weep/cavity vent products to form cavity vents.

1. Close cavities off vertically and horizontally with blocking in manner indicated. Install through-wall flashing and weep holes above horizontal blocking.

3.15 REINFORCED UNIT MASONRY INSTALLATION

A. Temporary Formwork and Shores: Construct formwork and shores as needed to support reinforced masonry elements during construction.

1. Construct formwork to provide shape, line, and dimensions of completed masonry as indicated. Make forms sufficiently tight to prevent leakage of mortar and grout. Brace, tie, and support forms to maintain position and shape during construction and curing of reinforced masonry.
2. Do not remove forms and shores until reinforced masonry members have hardened sufficiently to carry their own weight and that of other loads that may be placed on them during construction.

B. Placing Reinforcement: Comply with requirements in TMS 602/ACI 530.1/ASCE 6.

C. Grouting: Do not place grout until entire height of masonry to be grouted has attained enough strength to resist grout pressure.

1. Comply with requirements in TMS 602/ACI 530.1/ASCE 6 for cleanouts and for grout placement, including minimum grout space and maximum pour height.
2. Limit height of vertical grout pours to not more than 60 inches (1520 mm).

3.16 FIELD QUALITY CONTROL

A. Testing and Inspecting: Owner will engage special inspectors to perform tests and inspections and prepare reports. Allow inspectors access to scaffolding and work areas as needed to perform tests and inspections. Retesting of materials that fail to comply with specified requirements shall be done at Contractor's expense.

B. Inspections: Special inspections according to Level B in TMS 402/ACI 530/ASCE 5.

C. Refer to Drawing S601 for additional testing requirements.

3.17 REPAIRING, POINTING, AND CLEANING

A. Remove and replace masonry units that are loose, chipped, broken, stained, or otherwise damaged or that do not match adjoining units. Install new units to match adjoining units; install in fresh mortar, pointed to eliminate evidence of replacement.

B. Pointing: During the tooling of joints, enlarge voids and holes, except weep holes, and completely fill with mortar. Point up joints, including corners, openings, and adjacent construction, to provide a neat, uniform appearance. Prepare joints for sealant application, where indicated.

C. In-Progress Cleaning: Clean unit masonry as work progresses by dry brushing to remove mortar fins and smears before tooling joints.

D. Final Cleaning: After mortar is thoroughly set and cured, clean exposed masonry as follows:

1. Remove large mortar particles by hand with wooden paddles and nonmetallic scrape hoes or chisels.

2. Test cleaning methods on sample wall panel; leave one-half of panel uncleaned for comparison purposes. Obtain Architect's approval of sample cleaning before proceeding with cleaning of masonry.
3. Protect adjacent stone and nonmasonry surfaces from contact with cleaner by covering them with liquid strippable masking agent or polyethylene film and waterproof masking tape.
4. Wet wall surfaces with water before applying cleaners; remove cleaners promptly by rinsing surfaces thoroughly with clear water.
5. Clean brick by bucket-and-brush hand-cleaning method described in BIA Technical Notes 20.
6. Clean concrete masonry by applicable cleaning methods indicated in NCMA TEK 8-4A.
7. Clean masonry with a proprietary acidic cleaner applied according to manufacturer's written instructions.
8. Clean stone trim to comply with stone supplier's written instructions.

3.18 MASONRY WASTE DISPOSAL

A. Salvageable Materials: Unless otherwise indicated, excess masonry materials are Contractor's property. At completion of unit masonry work, remove from Project site.

B. Excess Masonry Waste: Remove excess clean masonry waste that cannot be used as fill, as described above or recycled, and other masonry waste, and legally dispose of off Owner's property.

END OF SECTION 042000

SECTION 047200 - CAST STONE MASONRY

PART 1 - GENERAL

1.1 RELATED DOCUMENTS

A. Drawings and general provisions of the Contract, including General and Supplementary Conditions and Division 01 Specification Sections, apply to this Section.

1.2 SUMMARY

A. Section Includes:

1. Cast-stone trim.

B. Related Sections:

1. Section 042000 "Unit Masonry" for installing cast-stone units in unit masonry.
2. Section 047300 "Manufactured Stone Masonry."
3. Section 079200 "Joint Sealants" for pointing sealants.

1.3 ACTION SUBMITTALS

A. Product Data: For each type of product.

1. For cast-stone units, include construction details, material descriptions, dimensions of individual components and profiles, and finishes.

B. Shop Drawings: Show fabrication and installation details for cast-stone units. Include dimensions, details of reinforcement and anchorages if any, and indication of finished faces.

1. Include building elevations showing layout of units and locations of joints and anchors.

C. Samples for Verification:

1. For each color and texture of cast stone required, 10 inches (250 mm) square in size.
2. For each trim shape required, 10 inches (250 mm) in length.

1.4 INFORMATIONAL SUBMITTALS

A. Qualification Data: For manufacturer.

1. Include copies of material test reports for completed projects, indicating compliance of cast stone with ASTM C 1364.

B. Material Test Reports: For each mix required to produce cast stone, based on testing according to ASTM C 1364, including test for resistance to freezing and thawing.

1. Provide test reports based on testing within previous two years.

1.5 QUALITY ASSURANCE

A. Manufacturer Qualifications: A qualified manufacturer of cast-stone units similar to those indicated for this Project, that has sufficient production capacity to manufacture required units, and is a plant certified by the Cast Stone Institute.

B. Testing Agency Qualifications: Qualified according to ASTM E 329 for testing indicated.

C. Mockups: Furnish cast stone for installation in mockups specified in Section 042000 "Unit Masonry."

1.6 DELIVERY, STORAGE, AND HANDLING

A. Coordinate delivery of cast stone with unit masonry work to avoid delaying the Work and to minimize the need for on-site storage.

B. Pack, handle, and ship cast-stone units in suitable packs or pallets.

1. Lift with wide-belt slings; do not use wire rope or ropes that might cause staining. Move cast-stone units if required, using dollies with wood supports.
2. Store cast-stone units on wood skids or pallets with nonstaining, waterproof covers, securely tied. Arrange to distribute weight evenly and to prevent damage to units. Ventilate under covers to prevent condensation.

C. Store cementitious materials on elevated platforms, under cover, and in a dry location. Do not use cementitious materials that have become damp.

D. Store mortar aggregates where grading and other required characteristics can be maintained and contamination can be avoided.

1.7 PROJECT CONDITIONS

A. Cold-Weather Requirements: Do not use frozen materials or materials mixed or coated with ice or frost. Do not build on frozen substrates. Comply with cold-weather construction requirements in TMS 602/ACI 530.1/ASCE 6.

1. Cold-Weather Cleaning: Use liquid cleaning methods only when air temperature is 40 deg F (4 deg C) and above and will remain so until cast stone has dried, but no fewer than seven days after completing cleaning.

B. Hot-Weather Requirements: Comply with hot-weather construction requirements in TMS 602/ACI 530.1/ASCE 6.

PART 2 - PRODUCTS

2.1 MANUFACTURERS

A. Source Limitations for Cast Stone: Obtain cast-stone units from single source from single manufacturer.

B. Source Limitations for Mortar Materials: Obtain mortar ingredients of a uniform quality, including color, from one manufacturer for each cementitious component and from one source or producer for each aggregate.

2.2 CAST-STONE MATERIALS

A. General: Comply with ASTM C 1364.

B. Portland Cement: ASTM C 150/C 150M, Type I or Type III, containing not more than 0.60 percent total alkali when tested according to ASTM C 114. Provide natural color or white cement as required to produce cast-stone color indicated.

C. Coarse Aggregates: Granite, quartz, or limestone complying with ASTM C 33/C 33M; gradation and colors as needed to produce required cast-stone textures and colors.

D. Fine Aggregates: Natural sand or crushed stone complying with ASTM C 33/C 33M, gradation and colors as needed to produce required cast-stone textures and colors.

E. Color Pigment: ASTM C 979/C 979M, synthetic mineral-oxide pigments or colored water-reducing admixtures; color stable, free of carbon black, nonfading, and resistant to lime and other alkalis.

F. Admixtures: Use only admixtures specified or approved in writing by Architect.

1. Do not use admixtures that contain more than 0.1 percent water-soluble chloride ions by mass of cementitious materials. Do not use admixtures containing calcium chloride.
2. Use only admixtures that are certified by manufacturer to be compatible with cement and other admixtures used.
3. Air-Entraining Admixture: ASTM C 260/C 260M. Add to mixes for units exposed to the exterior at manufacturer's prescribed rate to result in an air content of 4 to 6 percent, except do not add to zero-slump concrete mixes.
4. Water-Reducing Admixture: ASTM C 494/C 494M, Type A.
5. Water-Reducing, Retarding Admixture: ASTM C 494/C 494M, Type D.
6. Water-Reducing, Accelerating Admixture: ASTM C 494/C 494M, Type E.

G. Reinforcement: Deformed steel bars complying with ASTM A 615/A 615M, Grade 60 (Grade 420). Use galvanized reinforcement when covered with less than 1-1/2 inches (38 mm) of cast-stone material.

1. Galvanized Coating: ASTM A 767/A 767M.

H. Embedded Anchors and Other Inserts: Fabricated from stainless steel complying with ASTM A 240/A 240M, ASTM A 276, or ASTM A 666, Type 304.

2.3 CAST-STONE UNITS

A. Manufacturers: Subject to compliance with requirements, provide products by one of the following:

1. Cast Stone Systems, Inc.
2. Hoyle Stone Products.
3. Reading Rock; RockCast.
4. Russell Cast Stone.
5. Sun Precast Company.

B. Cast-Stone Units: Comply with ASTM C 1364.

1. Units shall be manufactured using the vibrant dry tamp or wet-cast method.
2. Units shall be resistant to freezing and thawing as determined by laboratory testing according to ASTM C 666/C 666M, Procedure A, as modified by ASTM C 1364.

C. Fabricate units with sharp arris and accurately reproduced details, with indicated texture on all exposed surfaces unless otherwise indicated.

1. Slope exposed horizontal surfaces 1:12 to drain unless otherwise indicated.
2. Provide raised fillets at backs of sills and at ends indicated to be built into jambs.
3. Provide drips on projecting elements unless otherwise indicated.

D. Fabrication Tolerances:

1. Variation in Cross Section: Do not vary from indicated dimensions by more than 1/8 inch (3 mm).
2. Variation in Length: Do not vary from indicated dimensions by more than 1/360 of the length of unit or 1/8 inch (3 mm), whichever is greater, but in no case by more than 1/4 inch (6 mm).
3. Warp, Bow, and Twist: Not to exceed 1/360 of the length of unit or 1/8 inch (3 mm), whichever is greater.
4. Location of Grooves, False Joints, Holes, Anchorages, and Similar Features: Do not vary from indicated position by more than 1/8 inch (3 mm) on formed surfaces of units and 3/8 inch (10 mm) on unformed surfaces.

E. Cure Units as Follows:

1. Cure units in enclosed, moist curing room at 95 to 100 percent relative humidity and temperature of 100 deg F (38 deg C) for 12 hours or 70 deg F (21 deg C) for 16 hours.
2. Keep units damp and continue curing to comply with one of the following:

a. No fewer than five days at mean daily temperature of 70 deg F (21 deg C) or above.
b. No fewer than six days at mean daily temperature of 60 deg F (16 deg C) or above.
c. No fewer than seven days at mean daily temperature of 50 deg F (10 deg C) or above.
d. No fewer than eight days at mean daily temperature of 45 deg F (7 deg C) or above.

F. Acid etch units after curing to remove cement film from surfaces to be exposed to view.

G. Colors and Textures: To match Rockcast Buff Stone GP-A.

2.4 MORTAR MATERIALS

A. Provide mortar materials that comply with Section 042000 "Unit Masonry."

2.5 ACCESSORIES

A. Anchors: Type and size indicated, fabricated from Type 304 stainless steel complying with ASTM A 240/A 240M, ASTM A 276, or ASTM A 666.

B. Dowels: 1/2-inch- (12-mm-) diameter round bars, fabricated from Type 304 stainless steel complying with ASTM A 240/A 240M, ASTM A 276, or ASTM A 666.

C. Non-Acidic Cleaner: Cleaner as recommended in writing by cast stone manufacturer for removing mortar/grout stains, efflorescence, and other new construction stains from new masonry without discoloring or damaging masonry surfaces. Use product expressly approved for intended use by cast-stone manufacturer and expressly approved by cleaner manufacturer for use on cast stone and adjacent masonry materials.

2.6 MORTAR MIXES

A. Comply with requirements in Section 042000 "Unit Masonry" for mortar mixes.

PART 3 - EXECUTION

3.1 EXAMINATION

A. Examine substrates and conditions, with Installer present, for compliance with requirements for installation tolerances and other conditions affecting performance of the Work.

B. Proceed with installation only after unsatisfactory conditions have been corrected.

3.2 SETTING ANCHORED CAST STONE WITH SEALANT-FILLED JOINTS

A. Set cast stone as indicated on Drawings. Set units accurately in locations indicated, with edges and faces aligned according to established relationships and indicated tolerances.

1. Install anchors, supports, fasteners, and other attachments indicated or necessary to secure units in place.
2. Shim and adjust anchors, supports, and accessories to set cast stone in locations indicated with uniform joints.

B. Keep cavities open where unfilled space is indicated between back of cast-stone units and backup wall; do not fill cavities with mortar or grout.

C. Fill anchor holes with sealant.

1. Where dowel holes occur at pressure-relieving joints, provide compressible material at ends of dowels.

D. Set cast stone supported on clip or continuous angles on resilient setting shims. Use material of thickness required to maintain uniform joint widths. Hold shims back from face of cast stone a distance at least equal to width of joint.

E. Keep joints free of mortar and other rigid materials. Remove temporary shims and spacers from joints after anchors and supports are secured in place and cast-stone units are anchored. Do not begin sealant installation until temporary shims and spacers are removed.

1. Form open joint of width indicated, but not less than 3/8 inch (10 mm).

F. Prime cast-stone surfaces to receive sealant and install compressible backer rod in joints before applying sealant unless otherwise indicated.

G. Prepare and apply sealant of type and at locations indicated to comply with applicable requirements in Section 079200 "Joint Sealants."

3.3 INSTALLATION TOLERANCES

A. Variation from Plumb: Do not exceed 1/8 inch in 10 feet (3 mm in 3 m), 1/4 inch in 20 feet (6 mm in 6 m), or 1/2 inch (12 mm) maximum.

B. Variation from Level: Do not exceed 1/8 inch in 10 feet (3 mm in 3 m), 1/4 inch in 20 feet (6 mm in 6 m), or 1/2 inch (12 mm) maximum.

C. Variation in Joint Width: Do not vary joint thickness more than 1/8 inch in 36 inches (3 mm in 900 mm) or one-fourth of nominal joint width, whichever is less.

D. Variation in Plane between Adjacent Surfaces (Lipping): Do not vary from flush alignment with adjacent units or adjacent surfaces indicated to be flush with units by more than 1/16 inch (1.5 mm), except where variation is due to warpage of units within tolerances specified.

3.4 ADJUSTING AND CLEANING

A. Remove and replace stained and otherwise damaged units and units not matching approved Samples. Cast stone may be repaired if methods and results are approved by Architect.

B. Replace units in a manner that results in cast stone matching approved Samples, complying with other requirements, and showing no evidence of replacement.

C. In-Progress Cleaning: Clean cast stone as work progresses.

1. Remove mortar fins and smears before tooling joints.
2. Remove excess sealant immediately, including spills, smears, and spatter.

D. Final Cleaning: After mortar is thoroughly set and cured, clean exposed cast stone as follows:

1. Remove large mortar particles by hand with wooden paddles and nonmetallic scrape hoes or chisels.
2. Test cleaning methods on sample; leave one sample uncleaned for comparison purposes. Obtain Architect's approval of sample cleaning before proceeding with cleaning of cast stone.
3. Protect adjacent surfaces from contact with cleaner by covering them with liquid strippable masking agent or polyethylene film and waterproof masking tape.
4. Wet surfaces with water before applying cleaners; remove cleaners promptly by rinsing thoroughly with clear water.
5. Clean cast stone by bucket-and-brush hand-cleaning method described in BIA Technical Notes 20.

    a. Use non-acidic cleaner only where hand-cleaning methods are ineffective.

END OF SECTION 047200

SECTION 047300 - MANUFACTURED STONE MASONRY

PART 1 - GENERAL

1.1 RELATED DOCUMENTS

A. Drawings and general provisions of the Contract, including General and Supplementary Conditions and Division 1 Specification Sections, apply to this Section.

1.2 SUMMARY

A. This Section includes the following:

1. Manufactured stone masonry veneer.

B. Related Sections include the following:

1. Section 042000 "Unit Masonry" for mortar and grout.
2. Section 047200 "Cast Stone."
3. Section 079200 “Joint Sealants.”

1.3 DEFINITIONS

A. Manufactured Stone Masonry Veneer: An architectural stone unit manufactured to copy fine grain texture and color of natural cut stone. Meets ASTM C 90 requirements.

B. Dry Cast Concrete Products: Manufactured from zero-slump concrete.

C. Machine Casting Method: Vibratory compaction by machine of earth-moist, zero-slump concrete against rigid mold until it is densely compacted.

1.4 SUBMITTALS

A. Product Data: Include construction details, material descriptions, dimensions of individual components and profiles, and finishes for cast stone units.

B. Shop Drawings: Show fabrication and installation details for cast stone units. Include dimensions; details for reinforcement and anchorages, if any; and indication of finished faces.

1. Include building elevations showing layout of units and locations of joints and anchors.

C. Samples for Verification:

1. For each color and texture of cast stone required, 12 inches (305 mm) square in size.
2. For each mortar color required, showing the full range expected in the finished construction. Make samples using the same sand and mortar ingredients to be used on Project. Label samples to indicate type and amount of colorant used. Provide sample for masonry mock-up panel.

D. Qualification Data: For firms and persons specified in "Quality Assurance" Article to demonstrate their capabilities and experience. Include lists of completed projects with project names and addresses, names and addresses of architects and owners, and other information specified.

E. Material Test Reports: From a qualified testing agency indicating and interpreting test results for compliance of cast stone with requirements indicated.

1.5 QUALITY ASSURANCE

A. Manufacturer Qualifications:

1. Sufficient plant facilities to provide quality, shapes, quantities, and sizes of architectural stone units required without delaying progress of the Work.
2. Minimum of 10 years experience in producing masonry units.
3. Custom Cast Stone Series and Architectural Masonry Veneer Series are to be manufactured from a similar mix design to match color and texture.
4. Manufacturer shall have an internal Quality Assurance Testing Program with certified laboratory technician(s).

B. Sample Panels: Build sample panels of each supplier's product to demonstrate aesthetic effects. Comply with requirements in Division 01 Section "Quality Requirements" for mockups.

1. Build sample panels for each type of manufactured stone masonry construction in sizes approximately 48 inches (1200 mm) long by 48 inches (1200 mm) high.

   a. Build the following sample panels of each supplier's cast stone concrete masonry.

      1) One panel made of Type MSM-1.
      2) One panel made of Type MSM-2.

2. Clean one-half of exposed faces of panels with masonry cleaner indicated.
3. Protect approved sample panels from the elements with weather-resistant membrane.
4. Erection of sample panels is for final product selection based on color, texture, and blending of masonry units; relationship of mortar to masonry unit colors and other material and construction qualities specifically approved by Architect in writing.

   a. Approval of sample panels does not constitute approval of deviations from the Contract Documents contained in sample panels unless such deviations are specifically approved by Architect in writing.

C. Mockup: Prior to installing manufactured stone masonry, construct mockup wall panels to verify selections made under sample submittals and from sample panels to demonstrate aesthetic effects of materials and execution. Build mockups to comply with the following requirements, using materials indicated for final unit of Work.

1. Locate mockups on site in the locations indicated or, if not indicated, as directed by Architect.
2. Build mockup of typical wall area as shown on drawings.

   a. Include sealant-filled joint complying with requirements of Division 7 Section "Joint Sealants."

3. Build mockups for each of the following types of manufactured stone masonry in sizes approximately 6' long by 5' 4" high by full thickness, including face and back-up wythes as well as accessories. Coordinate panel make-up with Architect.

a. Typical exterior face of wall as designated on drawings.

4. Clean exposed faces of mockups with masonry cleaner indicated.

5. Notify Architect one week in advance of the dates and times when mockups will be constructed.

6. Protect accepted mockups from the elements with weather-resistant membrane.

7. Retain and maintain mockups during construction in an undisturbed condition as a standard for judging the completed Work.

a. Acceptance of mockups is for color, texture, and blending of masonry units; relationship of mortar and sealant colors to masonry unit colors; tooling of joints; aesthetic qualities of workmanship; and other material and construction qualities specifically approved by Architect in writing.

1) Acceptance of mockups does not constitute approval of deviations from the Contract Documents contained in mockups, unless such deviations are specifically approved by Architect in writing.

1.6 DELIVERY, STORAGE, AND HANDLING

A. Delivery:

1. Deliver architectural stone units secured to shipping pallets and protected from damage and discoloration.
2. Provide itemized shipping list.
3. Number each piece individually, as required, to match shop drawings and schedules.

B. Storage:

1. Store architectural stone units and installation materials in accordance with manufacturer's instructions.
2. Store architectural stone units on pallets with non-staining, waterproof covers.
3. Do not double stack pallets.
4. Ventilate units under covers to prevent condensation.
5. Prevent contact with dirt and splashing.

C. Handling:

1. Protect architectural stone units, including corners and edges, during storage, handling, and installation to prevent chipping, cracking, staining, or other damage.
2. Handle long units at center and both ends simultaneously to prevent cracking.
3. Do not use pry bars or other equipment in a manner that could damage units.

1.7 COORDINATION

A. Coordinate production and delivery of cast stone with unit masonry work to minimize the need for on-site storage and to avoid delaying the Work.

PART 2 - PRODUCTS

2.1 MANUFACTURERS

A. Basis-of-Design: Subject to compliance with requirements, provide Shouldice Designer Stone; Tapestry Pearl White or an equivalent product approved by Architect prior to bid.

1. Rockcast; Buff Stone.
2. Custom Cast Stone, Inc.; custom color.
3. E.Dillon & Company; Matte Series, custom color.

B. Substitutions: Requests for substitutions shall be made in writing at least ten days prior to the date of the Bid Opening and must meet the requirements set forth in Instructions to Bidders.

2.2 MANUFACTUERED STONE MASONRY VENEER (**MSM-1, MSM-2**)

A. Compliance: ASTM C 90.

B. Casting Method: Machine.

C. Color: Match Rockcast Buff Stone.

D. Types:

1. Type MSM-1: Size: 3-5/8 x 15-5/8 x 23-5/8, single chamfered (SCF)
2. Type MSM-2: Size: 3-5/8 x 15-5/8 x 23-5/8, smooth (SM).

D. Test Results:

1. Compressive Strength, ASTM C 140: 4,000 - 6,000 psi at 28 days.
2. Absorption, ASTM C 140: Less than 6 percent at 28 days.
3. Linear Shrinkage, ASTM C 426: Maximum .065 percent.
4. Density, ASTM C 140: Greater than 120 pounds per cubic foot.
5. Freeze-Thaw, ASTM C 666: Less than 5 percent cumulative mass loss after 300 cycles.

E. Curing: Cure in enclosed chamber at 95 percent relative humidity and 95 to 120 degrees F for 12 to 18 hours and yard cure for 350 degree-days.

2.4 ARCHITECTURAL STONE VENEER MATERIALS

A. Portland Cement: ASTM C 150, Type I or III. White and/or gray as required to match specified color.

B. Coarse Aggregates: ASTM C 33, except for gradation. Granite, quartz, or limestone.

C. Fine Aggregates: ASTM C 33, except for gradation. Manufactured or natural sands.

D. Pigments: ASTM C 979, except do not use carbon black pigments. Inorganic iron oxide pigments.

E. Water Reducing, Retarding, and Accelerating Admixtures: ASTM C 494.

F. Other admixtures: integral water repellents and other chemicals, for which no ASTM Standard exists, shall be previously established as suitable for use in concrete by proven field performance or through laboratory testing.

G. Water: Potable.

2.5 TEXTURE AND COLOR

A. General: Match texture and color of full-size sample on file with Architect.

B. Texture of Surfaces Exposed to View:

1. Fine-grained texture similar to natural stone and architectural stone units.
2. Approximately equal to approved sample when viewed in direct daylight at 10 feet.

C. Surface Air Voids:

1. Size: Maximum 1/32 inch.
2. Density: Less than 3 occurrences per any 1 square inch.
3. Viewing Conditions: Not obvious under direct daylight at 10 feet.

D. Finish:

2. Minor chips shall not be obvious under direct daylight at 20 feet, as determined by Architect.
3. The occurrence of crazing or efflorescence shall not constitute a cause for rejection.

E. Color Variation:

1. Viewing Conditions: Compare in direct daylight at 10 feet, between units of similar age, subjected to similar weathering conditions.

2.6 MORTAR

A. Mortar: As specified in Section 042000.

B. Mortar Materials: As specified in Section 042000.

2.7 ACCESSORIES

A. Anchors: Non-corrosive type, sized for conditions. Type 304 stainless steel.

B. Sealant: As specified in Section 079200.

C. Cleaner: Prosoco Sure Klean Custom Masonry Cleaner, Prosoco Sure Klean 600 Detergent, or Prosoco Sure Klean Vana Trol.

2.8 FABRICATION

A. Shapes: As indicated on drawings.

2.9 TOLERANCES

A. General: Manufacture architectural stone units within tolerances in accordance with ASTM C 90, unless otherwise specified.

B. Length, height, width: Do not deviate by more than plus or minus 1/8 inch from approved dimensions. These requirements do not apply to split faced units.

2.10 PRODUCTION QUALITY CONTROL

A. Mix Designs: Test new and existing mix designs for applicable compressive strength and absorption compliance before manufacturing architectural stone units.

B. Plant Production Testing: Tests to be conducted by certified laboratory testing technicians. Test from specimens selected at random from plant production in accordance with ASTM C 140.

PART 3 EXECUTION

3.1 EXAMINATION

A. Examine construction to receive architectural stone units. Notify Architect if construction is not acceptable. Do not begin installation until unacceptable conditions have been corrected.

B. Examine architectural stone units before installation. Do not install unacceptable units.

3.2 INSTALLATION

A. Install units in conjunction with masonry, as specified in Section 042000.

B. Pull units from multiple cubes during installation to minimize variation in color and help with natural blending.

C. Cut units using motor-driven masonry saws. Finished ends should be turned to the visible side and the saw cut turned to the inside of the mortar joint to hide exposed aggregates and saw marks.

D. Do not use pry bars or other equipment in a manner that could damage units.

E. Fill dowel holes and anchor slots completely with mortar or non-shrink grout.

F. Use Type N mortar (ASTM C 270), unless specified otherwise.

G. Per ACI 530.1, it is not necessary, nor recommended, to wet the units prior to installation.

H. Set units in full bed of mortar, unless otherwise indicated on the drawings.

I. Fill vertical joints with mortar.

J. Make joints 3/8 inch, unless otherwise indicated on the drawings.

K. Tuck point mortar joints to slight concave profile (unless specified otherwise).

L. Remove excess mortar immediately.

M. Remove mortar fins and smears before tooling joints.

N. Cover wainscot for protection and bond separation with plastic, felt paper or other approved products.

O. Cover freshly installed masonry products as required to assist with the curing process.

P. Sealant Joints:

1. As specified in Section 079200.
2. Prime ends of units, insert properly sized backing rod, and install sealant.
3. Provide sealant joints at following locations:

   a. Joints at relieving angles.
   b. Control and expansion joints.
   c. As indicated on the drawings.

3.3 TOLERANCES

A. Installation Tolerances:

1. Variation from Plumb: Do not exceed 1/8 inch in 5 feet or 1/4 inch in 20 feet or more.
2. Variation from Level: Do not exceed 1/8 inch in 5 feet, 1/4 inch in 20 feet, or 3/8 inch maximum.
3. Variation in Joint Width: Do not vary joint thickness more than 1/8 inch or 1/4 of nominal joint width, whichever is greater.
4. Variation in Plane Between Adjacent Surfaces: Do not exceed 1/8-inch difference between planes of adjacent units or adjacent surfaces indicated to be flush with units.

3.4 CLEANING

A. Clean exposed units after mortar is thoroughly set and cured.

B. Perform test of cleaner on small area of 4’ x 4’ on each type and color and receive approval by Architect before full cleaning. Let test area dry 4 to 5 days before inspection. Keep test area for future comparison.

C. Clean units by wetting down the surface first, before using the specified cleaner (as specified in Section 2.7.C). Brush on cleaner, let dwell for 2 to 3 minutes. Reapply cleaner, scrub surface with masonry brush and rinse off thoroughly. Areas with heavy soiling use a wood block or non-metallic scraper.

D. Apply cleaner to units in accordance with cleaner manufacturer's instructions.

E. Do not use the following to clean units:

1. Muriatic acid.
2. Power washing.
3. Sandblasting.
4. Harsh cleaning materials or methods that would damage or discolor surfaces.

3.5 REPAIR

A. Repair chips and other surface damage noticeable when viewed in direct daylight at 20 feet.

B. Repair with touchup materials provided by manufacturer in accordance with manufacturer's instructions.

C. Repair methods and results to be approved by Architect.

3.6 INSPECTION AND ACCEPTANCE

A. Inspect completed installation in accordance with ACI 530 requirements.

3.7 PROTECTION

A. Protect installed units from splashing, stains, mortar, and other damage.

END OF SECTION 047300

SECTION 051200 - STRUCTURAL STEEL FRAMING

PART 1 - GENERAL

1.1 RELATED DOCUMENTS

A. Drawings and general provisions of the Contract, including General and Supplementary Conditions and Division 01 Specification Sections, apply to this Section.

1.2 SUMMARY

A. Section Includes:

1. Structural steel.
2. Field-installed shear connectors.
3. Grout.

B. Related Requirements:

1. Section 053100 "Steel Decking" for field installation of shear connectors through deck.
2. Section 055000 "Metal Fabrications" for steel lintels and not attached to structural-steel frame, miscellaneous steel fabrications, and] other steel items not defined as structural steel.
3. Section 099123 “Interior Painting” for surface-preparation and priming requirements of exposed steel.

1.3 DEFINITIONS

A. Structural Steel: Elements of the structural frame indicated on Drawings and as described in AISC 303, "Code of Standard Practice for Steel Buildings and Bridges."

1.4 COORDINATION

A. Coordinate selection of shop primers with topcoats to be applied over them. Comply with paint and coating manufacturers' written recommendations to ensure that shop primers and topcoats are compatible with one another.

B. Coordinate installation of anchorage items to be embedded in or attached to other construction without delaying the Work. Provide setting diagrams, sheet metal templates, instructions, and directions for installation.

1.5 PREINSTALLATION MEETINGS

A. Preinstallation Conference: Conduct conference at Project site.

1.6 ACTION SUBMITTALS

A. Product Data: For each type of product.

B. Shop Drawings: Show fabrication of structural-steel components.

1. Include details of cuts, connections, splices, camber, holes, and other pertinent data.
2. Include embedment Drawings.
3. Indicate welds by standard AWS symbols, distinguishing between shop and field welds, and show size, length, and type of each weld. Show backing bars that are to be removed and supplemental fillet welds where backing bars are to remain.
4. Indicate type, size, and length of bolts, distinguishing between shop and field bolts. Identify pretensioned and slip-critical, high-strength bolted connections.

C. Welding Procedure Specifications (WPSs) and Procedure Qualification Records (PQRs): Provide according to AWS D1.1/D1.1M, "Structural Welding Code - Steel," for each welded joint whether prequalified or qualified by testing, including the following:

1. Power source (constant current or constant voltage).
2. Electrode manufacturer and trade name, for demand critical welds.

D. Delegated-Design Submittal: For structural-steel connections indicated to comply with design loads, include analysis date signed and sealed by the qualified professional engineer responsible for their preparation.

1.7 INFORMATIONAL SUBMITTALS

A. Qualification Data: For Installer, fabricator, shop-painting applicators, professional engineer, testing agency.

B. Welding certificates.

C. Paint Compatibility Certificates: From manufacturers of topcoats applied over shop primers, certifying that shop primers are compatible with topcoats.

D. Mill test reports for structural steel, including chemical and physical properties.

E. Product Test Reports: For the following:

1. Bolts, nuts, and washers including mechanical properties and chemical analysis.
2. Direct-tension indicators.
3. Tension-control, high-strength, bolt-nut-washer assemblies.
4. Shear stud connectors.
5. Shop primers.
6. Nonshrink grout.

F. Survey of existing conditions.

G. Source quality-control reports.

H. Field quality-control and special inspection reports.

1.8 QUALITY ASSURANCE

A. Fabricator Qualifications: Engage a firm experienced in fabricating structural steel similar to that indicated for this project and with a record of successful in-service performance, as well as sufficient production capacity to fabricate structural steel without delaying the work.

B. Installer Qualifications: Engage an experience installer who has completed structural steel work similar in material, design, and extent to that indicated for this project and with a record of successful in-service performance.

C. Shop-Painting Applicators: Qualified according to AISC's Sophisticated Paint Endorsement P1 and Endorsement P2 or to SSPC-QP 3, "Standard Procedure for Evaluating Qualifications of Shop Painting Applicators."

D. Welding Qualifications: Qualify procedures and personnel according to AWS D1.1/D1.1M, "Structural Welding Code - Steel."

1. Welders and welding operators performing work on bottom-flange, demand-critical welds shall pass the supplemental welder qualification testing, as required by AWS D1.8/D1.8M. FCAW-S and FCAW-G shall be considered separate processes for welding personnel qualification.

E. Comply with applicable provisions of the following specifications and documents:

1. AISC 303.
2. AISC 341 and AISC 341s1.
3. AISC 360.
4. RCSC's "Specification for Structural Joints Using ASTM A 325 or A 490 Bolts."

1.9 DELIVERY, STORAGE, AND HANDLING

A. Store materials to permit easy access for inspection and identification. Keep steel members off ground and spaced by using pallets, dunnage, or other supports and spacers. Protect steel members and packaged materials from corrosion and deterioration.

1. Do not store materials on structure in a manner that might cause distortion, damage, or overload to members or supporting structures. Repair or replace damaged materials or structures as directed.

B. Store fasteners in a protected place in sealed containers with manufacturer's labels intact.

1. Fasteners may be repackaged provided Owner's testing and inspecting agency observes repackaging and seals containers.
2. Clean and relubricate bolts and nuts that become dry or rusty before use.
3. Comply with manufacturers' written recommendations for cleaning and lubricating ASTM F 1852 fasteners and for retesting fasteners after lubrication.

PART 2 - PRODUCTS

2.1 PERFORMANCE REQUIREMENTS

A. Connections: Provide details of simple shearconnections required by the Contract Documents to be selected or completed by structural-steel fabricator to withstand loads indicated and comply with other information and restrictions indicated.

1. Select and complete connections using schematic details indicated and AISC 360.

B. Moment Connections: Type PR, partially restrained for lateral connections. Type FR, fully restrained for cantilever connections.

C. Construction: Moment frame and Braced frame.

2.2 STRUCTURAL-STEEL MATERIALS

A. W-Shapes: ASTM A 992/A 992M, Grade 50 (345).

B. Channels, Angles, ASTM A 36/A 36M, Grade 50 (345).

C. Plate and Bar: ASTM A 36/A 36M and ASTM A 572/A 572M, Grade 50 (345).

D. Corrosion-Resisting Structural-Steel Shapes, Plates, and Bars: ASTM A 588/A 588M, Grade 50 (345).

E. Cold-Formed Hollow Structural Sections: ASTM A 500/A 500M, Grade B structural tubing.

F. Corrosion-Resisting, Cold-Formed Hollow Structural Sections: ASTM A 847/A 847M, structural tubing.

G. Steel Pipe: ASTM A 53/A 53M, Type E or Type S, Grade B.

1. Weight Class: Standard.
2. Finish: Black except where indicated to be galvanized.

H. Welding Electrodes: Comply with AWS requirements.

2.3 BOLTS, CONNECTORS, AND ANCHORS

A. High-Strength Bolts, Nuts, and Washers: ASTM A 325 (ASTM A 325M), Type 1, heavy-hex steel structural bolts; ASTM A 563, Grade C, (ASTM A 563M, Class 8S) heavy-hex carbon-steel nuts; and ASTM F 436 (ASTM F 436M), Type 1, hardened carbon-steel washers; all with plain finish.

1. Direct-Tension Indicators: ASTM F 959, Type 325 (ASTM F 959M, Type 8.8), compressible-washer type with plain finish.

B. Shear Connectors: ASTM A 108, Grades 1015 through 1020, headed-stud type, cold-finished carbon steel; AWS D1.1/D1.1M, Type B.

C. Unheaded Anchor Rods: ASTM F 1554, Grade 36.

1. Configuration: Straight and threaded.
2. Nuts: ASTM A 563 (ASTM A 563M) heavy-hex carbon steel.
3. Plate Washers: ASTM A 36/A 36M carbon steel.
4. Washers: ASTM F 436 (ASTM F 436M), Type 1, hardened carbon steel.
5. Finish: Plain unless noted otherwise.

D. Threaded Rods: ASTM A 36/A 36M.

1. Nuts: ASTM A 563 (ASTM A 563M) heavy-hex carbon steel.
2. Washers: ASTM A 36/A 36M carbon steel.
3. Finish: Plain unless noted otherwise.

E. Clevises and Turnbuckles: Made from cold-finished carbon steel bars, ASTM A 108, Grade 1035.

F. Eye Bolts and Nuts: Made from cold-finished carbon steel bars, ASTM A 108, Grade 1030.

G. Sleeve Nuts: Made from cold-finished carbon steel bars, ASTM A 108, Grade 1018.

2.4 PRIMER

A. Primer: Fabricator's standard lead- and chromate-free, nonasphaltic, rust-inhibiting primer complying with MPI#79 and compatible with topcoat.

B. Galvanizing Repair Paint: MPI#18, MPI#19, or SSPC-Paint 20 & ASTM A 780/A 780M.

2.5 GROUT

A. Nonmetallic, Shrinkage-Resistant Grout: ASTM C 1107/C 1107M, factory-packaged, nonmetallic aggregate grout, noncorrosive and nonstaining, mixed with water to consistency suitable for application and a 30-minute working time.

2.6 FABRICATION

A. Structural Steel: Fabricate and assemble in shop to greatest extent possible. Fabricate according to AISC 303, "Code of Standard Practice for Steel Buildings and Bridges," and to AISC 360.

1. Camber structural-steel members where indicated.
2. Fabricate beams with rolling camber up.
3. Identify high-strength structural steel according to ASTM A 6/A 6M and maintain markings until structural steel has been erected.
4. Mark and match-mark materials for field assembly.

5. Complete structural-steel assemblies, including welding of units, before starting shop-priming operations.

B. Thermal Cutting: Perform thermal cutting by machine to greatest extent possible.

1. Plane thermally cut edges to be welded to comply with requirements in AWS D1.1/D1.1M.

C. Bolt Holes: Cut, drill, mechanically thermal cut, or punch standard bolt holes perpendicular to metal surfaces.

D. Finishing: Accurately finish ends of columns and other members transmitting bearing loads.

E. Cleaning: Clean and prepare steel surfaces that are to remain unpainted according to SSPC-SP 1, "Solvent Cleaning."

F. Shear Connectors: Prepare steel surfaces as recommended by manufacturer of shear connectors. Use automatic end welding of headed-stud shear connectors according to AWS D1.1/D1.1M and manufacturer's written instructions.

G. Holes: Provide holes required for securing other work to structural steel and for other work to pass through steel members.

1. Cut, drill, or punch holes perpendicular to steel surfaces. Do not thermally cut bolt holes or enlarge holes by burning.
2. Baseplate Holes: Cut, drill, mechanically thermal cut, or punch holes perpendicular to steel surfaces.
3. Weld threaded nuts to framing and other specialty items indicated to receive other work.

2.7 SHOP CONNECTIONS

A. High-Strength Bolts: Shop install high-strength bolts according to RCSC's "Specification for Structural Joints Using ASTM A 325 or A 490 Bolts" for type of bolt and type of joint specified.

1. Joint Type: Snug tightened, Pretensioned, or Slip critical.

B. Weld Connections: Comply with AWS D1.1/D1.1M for tolerances, appearances, welding procedure specifications, weld quality, and methods used in correcting welding work.

2.8 SHOP PRIMING

A. Shop prime steel surfaces except the following:

1. Surfaces embedded in concrete or mortar. Extend priming of partially embedded members to a depth of 2 inches (50 mm).
2. Surfaces to be field welded.
3. Surfaces of high-strength bolted, slip-critical connections.
4. Galvanized surfaces.

B. Surface Preparation: Clean surfaces to be painted. Remove loose rust and mill scale and spatter, slag, or flux deposits. Prepare surfaces according to the following specifications and standards:

1. SSPC-SP 2, "Hand Tool Cleaning."
2. SSPC-SP 3, "Power Tool Cleaning."

C. Priming: Immediately after surface preparation, apply primer according to manufacturer's written instructions and at rate recommended by SSPC to provide a minimum dry film thickness of 1.5 mils (0.038 mm). Use priming methods that result in full coverage of joints, corners, edges, and exposed surfaces.

1. Stripe paint corners, crevices, bolts, welds, and sharp edges.
2. Apply two coats of shop paint to surfaces that are inaccessible after assembly or erection. Change color of second coat to distinguish it from first.

D. Painting: Prepare steel and apply a one-coat, nonasphaltic primer complying with SSPC-PS Guide 7.00, "Painting System Guide 7.00: Guide for Selecting One-Coat Shop Painting Systems," to provide a dry film thickness of not less than 1.5 mils (0.038 mm).

2.9 GALVANIZING

A. Hot-Dip Galvanized Finish: Apply zinc coating by the hot-dip process to structural steel according to ASTM A 123/A 123M.

1. Fill vent and drain holes that are exposed in the finished Work unless they function as weep holes, by plugging with zinc solder and filing off smooth.
2. Galvanize lintels attached to structural-steel frame and located in exterior walls.

2.10 SOURCE QUALITY CONTROL

A. Testing Agency: Owner will engage a qualified testing agency to perform shop tests and inspections.

1. Provide testing agency with access to places where structural-steel work is being fabricated or produced to perform tests and inspections.

B. Bolted Connections: Inspect and test shop-bolted connections according to RCSC's "Specification for Structural Joints Using ASTM A 325 or A 490 Bolts."

C. Welded Connections: Visually inspect shop-welded connections according to AWS D1.1/D1.1M and the following inspection procedures, at testing agency's option:

1. Liquid Penetrant Inspection: ASTM E 165.
2. Magnetic Particle Inspection: ASTM E 709; performed on root pass and on finished weld. Cracks or zones of incomplete fusion or penetration are not accepted.
3. Ultrasonic Inspection: ASTM E 164.
4. Radiographic Inspection: ASTM E 94.

D. In addition to visual inspection, test and inspect shop-welded shear connectors according to requirements in AWS D1.1/D1.1M for stud welding and as follows:

1. Perform bend tests if visual inspections reveal either a less-than-continuous 360-degree flash or welding repairs to any shear connector.
2. Conduct tests according to requirements in AWS D1.1/D1.1M on additional shear connectors if weld fracture occurs on shear connectors already tested.

E. Prepare test and inspection reports.

PART 3 - EXECUTION

3.1 EXAMINATION

A. Verify, with certified steel erector present, elevations of concrete- and masonry-bearing surfaces and locations of anchor rods, bearing plates, and other embedments for compliance with requirements.

1. Prepare a certified survey of existing conditions. Include bearing surfaces, anchor rods, bearing plates, and other embedments showing dimensions, locations, angles, and elevations.

B. Proceed with installation only after unsatisfactory conditions have been corrected.

3.2 PREPARATION

A. Provide temporary shores, guys, braces, and other supports during erection to keep structural steel secure, plumb, and in alignment against temporary construction loads and loads equal in intensity to design loads. Remove temporary supports when permanent structural steel, connections, and bracing are in place unless otherwise indicated.

3.3 ERECTION

A. Set structural steel accurately in locations and to elevations indicated and according to AISC 303 and AISC 360.

B. Baseplates Bearing Plates and Leveling Plates: Clean concrete- and masonry-bearing surfaces of bond-reducing materials, and roughen surfaces prior to setting plates. Clean bottom surface of plates.

1. Set plates for structural members on wedges, shims, or setting nuts as required.
2. Weld plate washers to top of baseplate.
3. Snug-tighten anchor rods after supported members have been positioned and plumbed. Do not remove wedges or shims but, if protruding, cut off flush with edge of plate before packing with grout.

4. Promptly pack grout solidly between bearing surfaces and plates so no voids remain. Neatly finish exposed surfaces; protect grout and allow to cure. Comply with manufacturer's written installation instructions for shrinkage-resistant grouts.

C. Maintain erection tolerances of structural steel within AISC 303, "Code of Standard Practice for Steel Buildings and Bridges."

D. Align and adjust various members that form part of complete frame or structure before permanently fastening. Before assembly, clean bearing surfaces and other surfaces that are in permanent contact with members. Perform necessary adjustments to compensate for discrepancies in elevations and alignment.

1. Level and plumb individual members of structure.
2. Make allowances for difference between temperature at time of erection and mean temperature when structure is completed and in service.

E. Splice members only where indicated.

F. Do not use thermal cutting during erection unless approved by Architect. Finish thermally cut sections within smoothness limits in AWS D1.1/D1.1M.

G. Do not enlarge unfair holes in members by burning or using drift pins. Ream holes that must be enlarged to admit bolts.

H. Shear Connectors: Prepare steel surfaces as recommended by manufacturer of shear connectors. Use automatic end welding of headed-stud shear connectors according to AWS D1.1/D1.1M and manufacturer's written instructions.

3.4 FIELD CONNECTIONS

A. High-Strength Bolts: Install high-strength bolts according to RCSC's "Specification for Structural Joints Using ASTM A 325 or A 490 Bolts" for type of bolt and type of joint specified.

1. Joint Type: Snug tightened or Slip critical.

B. Weld Connections: Comply with AWS D1.1/D1.1M for tolerances, appearances, welding procedure specifications, weld quality, and methods used in correcting welding work.

1. Comply with AISC 303 and AISC 360 for bearing, alignment, adequacy of temporary connections, and removal of paint on surfaces adjacent to field welds.
2. Remove backing bars or runoff tabs where indicated, back gouge, and grind steel smooth.
3. Assemble and weld built-up sections by methods that maintain true alignment of axes without exceeding tolerances in AISC 303, "Code of Standard Practice for Steel Buildings and Bridges," for mill material.

3.5 FIELD QUALITY CONTROL

A. Special Inspections: Owner will engage a qualified special inspector to perform the following special inspections:

1. Verify structural-steel materials and inspect steel frame joint details.
2. Verify weld materials and inspect welds.
3. Verify connection materials and inspect high-strength bolted connections.

B. Testing Agency: Owner will engage a qualified testing agency to perform tests and inspections.

C. Bolted Connections: Inspect and test bolted connections according to RCSC's "Specification for Structural Joints Using ASTM A 325 or A 490 Bolts."

D. Welded Connections: Visually inspect field welds according to AWS D1.1/D1.1M.

1. In addition to visual inspection, test and inspect field welds according to AWS D1.1/D1.1M and the following inspection procedures, at testing agency's option:

a. Liquid Penetrant Inspection: ASTM E 165.
b. Magnetic Particle Inspection: ASTM E 709; performed on root pass and on finished weld. Cracks or zones of incomplete fusion or penetration are not accepted.
c. Ultrasonic Inspection: ASTM E 164.
d. Radiographic Inspection: ASTM E 94.

E. In addition to visual inspection, test and inspect field-welded shear connectors according to requirements in AWS D1.1/D1.1M for stud welding and as follows:

1. Perform bend tests if visual inspections reveal either a less-than-continuous 360-degree flash or welding repairs to any shear connector.
2. Conduct tests according to requirements in AWS D1.1/D1.1M on additional shear connectors if weld fracture occurs on shear connectors already tested.

3.6 REPAIRS AND PROTECTION

A. Galvanized Surfaces: Clean areas where galvanizing is damaged or missing and repair galvanizing to comply with ASTM A 780/A 780M.

B. Touchup Painting: Immediately after erection, clean exposed areas where primer is damaged or missing and paint with the same material as used for shop painting to comply with SSPC-PA 1 for touching up shop-painted surfaces.

1. Clean and prepare surfaces by SSPC-SP 2 hand-tool cleaning or SSPC-SP 3 power-tool cleaning.

C. Touchup Painting: Cleaning and touchup painting are specified in Section 099123 "Interior Painting."

END OF SECTION 051200

SECTION 052100 - STEEL JOIST FRAMING

PART 1 - GENERAL

1.1 RELATED DOCUMENTS

A. Drawings and general provisions of the Contract, including General and Supplementary Conditions and Division 01 Specification Sections, apply to this Section.

1.2 SUMMARY

A. Section Includes:

1. K-series steel joists.
2. KCS-type K-series steel joists.
3. K-series steel joist substitutes.
4. Joist accessories.

B. Related Requirements:

1. Section 042000 "Unit Masonry" for installing bearing plates in unit masonry.

1.3 DEFINITIONS

A. SJI's "Specifications": Steel Joist Institute's "Standard Specifications, Load Tables and Weight Tables for Steel Joists and Joist Girders."

1.4 ACTION SUBMITTALS

A. Product Data: For each type of joist, accessory, and product.

B. Shop Drawings:

1. Include layout, designation, number, type, location, and spacing of joists.
2. Include joining and anchorage details; bracing, bridging, and joist accessories; splice and connection locations and details; and attachments to other construction.
3. Indicate locations and details of bearing plates to be embedded in other construction.

1.5 INFORMATIONAL SUBMITTALS

A. Qualification Data: For manufacturer and professional engineer.

B. Welding certificates.

C. Manufacturer certificates.

D. Mill Certificates: For each type of bolt.

E. Field quality-control reports.

1.6 QUALITY ASSURANCE

A. Manufacturer Qualifications: A manufacturer certified by SJI to manufacture joists complying with applicable standard specifications and load tables in SJI's "Specifications."

B. Welding Qualifications: Qualify field-welding procedures and personnel according to AWS D1.1/D1.1M, "Structural Welding Code - Steel."

1.7 DELIVERY, STORAGE, AND HANDLING

A. Deliver, store, and handle joists as recommended in SJI's "Specifications."

B. Protect joists from corrosion, deformation, and other damage during delivery, storage, and handling.

1.8 SEQUENCING

A. Deliver steel bearing plates to be built into masonry construction.

PART 2 - PRODUCTS

2.1 PERFORMANCE REQUIREMENTS

A. Structural Performance: Provide special joists and connections capable of withstanding design loads indicated.

1. Use ASD; data are given at service-load level.
2. Design special joists to withstand design loads with live-load deflections no greater than the following:

a. Roof Joists: Vertical deflection of 1/360 of the span.
b. Wind Uplift: All bar joists at roof shall be designed to resist a net uplift of 20 psf for all roof areas. Located bridging near the first bottom chord panel point and design all joist members to satisfy this additional loading condition.

2.2 K-SERIES STEEL JOISTS

A. Manufacture steel joists of type indicated according to "Standard Specification for Open Web Steel Joists, K-Series" in SJI's "Specifications," with steel-angle top- and bottom-chord members, underslung ends, and parallel top chord.

1. Joist Type: K-series steel joists and KCS-type K-series steel joists.

B. Steel Joist Substitutes: Manufacture according to "Standard Specifications for Open Web Steel Joists, K-Series" in SJI's "Specifications," with steel-angle or -channel members.

C. Top-Chord Extensions: Extend top chords of joists with SJI's Type S top-chord extensions where indicated, complying with SJI's "Specifications."

D. Extended Ends: Extend bearing ends of joists with SJI's Type R extended ends where indicated, complying with SJI's "Specifications."

E. Camber joists according to SJI's "Specifications."

F. Equip bearing ends of joists with manufacturer's standard beveled ends or sloped shoes if joist slope exceeds 1/4 inch per 12 inches (1:48).

2.3 PRIMERS

A. Primer: SSPC-Paint 15, or manufacturer's standard shop primer complying with performance requirements in SSPC-Paint 15.

2.4 JOIST ACCESSORIES

A. Bridging: Provide bridging anchors and number of rows of horizontal or diagonal bridging of material, size, and type required by SJI's "Specifications" for type of joist, chord size, spacing, and span. Furnish additional erection bridging if required for stability.

B. Fabricate steel bearing plates from ASTM A 36/A 36M steel with integral anchorages of sizes and thicknesses indicated. Hot-dip zinc coat according to ASTM A 123/A 123M.

C. Steel bearing plates with integral anchorages are specified in Section 055000 "Metal Fabrications."

D. Furnish ceiling extensions, either extended bottom-chord elements or a separate extension unit of enough strength to support ceiling construction. Extend ends to within 1/2 inch (13 mm) of finished wall surface unless otherwise indicated.

1. Finish: Plain, uncoated.

E. High-Strength Bolts, Nuts, and Washers: ASTM A 325 (ASTM A 325M), Type 1, heavy hex steel structural bolts; ASTM A 563 (ASTM A 563M) heavy hex carbon-steel nuts; and ASTM F 436 (ASTM F 436M) hardened carbon-steel washers.

1. Finish: Plain.

F. Welding Electrodes: Comply with AWS standards.

G. Furnish miscellaneous accessories including splice plates and bolts required by joist manufacturer to complete joist assembly.

2.5 CLEANING AND SHOP PAINTING

A. Clean and remove loose scale, heavy rust, and other foreign materials from fabricated joists and accessories by hand-tool cleaning, SSPC-SP 2.

B. Apply one coat of shop primer to joists and joist accessories to be primed to provide a continuous, dry paint film not less than 1 mil (0.025 mm) thick.

PART 3 - EXECUTION

3.1 EXAMINATION

A. Examine supporting substrates, embedded bearing plates, and abutting structural framing for compliance with requirements for installation tolerances and other conditions affecting performance of the Work.

B. Proceed with installation only after unsatisfactory conditions have been corrected.

3.2 INSTALLATION

A. Do not install joists until supporting construction is in place and secured.

B. Install joists and accessories plumb, square, and true to line; securely fasten to supporting construction according to SJI's "Specifications," joist manufacturer's written instructions, and requirements in this Section.

1. Before installation, splice joists delivered to Project site in more than one piece.
2. Space, adjust, and align joists accurately in location before permanently fastening.
3. Install temporary bracing and erection bridging, connections, and anchors to ensure that joists are stabilized during construction.
4. Delay rigidly connecting bottom-chord extensions to columns or supports until dead loads are applied.

C. Field weld joists to supporting steel bearing plates and framework. Coordinate welding sequence and procedure with placement of joists. Comply with AWS requirements and procedures for welding, appearance and quality of welds, and methods used in correcting welding work.

D. Bolt joists to supporting steel framework using carbon-steel bolts.

E. Install and connect bridging concurrently with joist erection, before construction loads are applied. Anchor ends of bridging lines at top and bottom chords if terminating at walls or beams.

3.3 FIELD QUALITY CONTROL

A. Testing Agency: Owner will engage a qualified testing agency to perform tests and inspections.

B. Visually inspect field welds according to AWS D1.1/D1.1M.

1. In addition to visual inspection, test field welds according to AWS D1.1/D1.1M and the following procedures, at testing agency's option:

a. Liquid Penetrant Inspection: ASTM E 165/E 165M.
b. Magnetic Particle Inspection: ASTM E 709.
c. Ultrasonic Testing: ASTM E 164.
d. Radiographic Testing: ASTM E 94.

C. Visually inspect bolted connections.

D. Prepare test and inspection reports.

3.4 PROTECTION

A. Repair damaged galvanized coatings on galvanized items with galvanized repair paint according to ASTM A 780/A 780M and manufacturer's written instructions.

B. Touchup Painting: After installation, promptly clean, prepare, and prime or reprime field connections, rust spots, and abraded surfaces of prime-painted joists, bearing plates, abutting structural steel, and accessories.

1. Clean and prepare surfaces by hand-tool cleaning according to SSPC-SP 2 or power-tool cleaning according to SSPC-SP 3.
2. Apply a compatible primer of same type as primer used on adjacent surfaces.

END OF SECTION 052100

SECTION 053100 - STEEL DECKING

PART 1 - GENERAL

1.1 RELATED DOCUMENTS

A. Drawings and general provisions of the Contract, including General and Supplementary Conditions and Division 01 Specification Sections, apply to this Section.

1.2 SUMMARY

A. Section Includes:

1. Roof deck.
2. Acoustical cellular roof deck.
3. Composite floor deck.

B. Related Requirements:

1. Section 033000 "Cast-in-Place Concrete" for normal-weight and lightweight structural concrete fill over steel deck.
2. Section 051200 "Structural Steel Framing" for shop- and field-welded shear connectors.
3. Section 055000 "Metal Fabrications" for framing deck openings with miscellaneous steel shapes.
4. Section 099123 "Interior Painting" for repair painting of primed deck and finish painting of deck.

1.3 ACTION SUBMITTALS

A. Product Data: For each type of deck, accessory, and product indicated.

B. Shop Drawings:

1. Include layout and types of deck panels, anchorage details, reinforcing channels, pans, cut deck openings, special jointing, accessories, and attachments to other construction.

1.4 INFORMATIONAL SUBMITTALS

A. Welding certificates.

B. Product Certificates: For each type of steel deck.

C. Product Test Reports: For tests performed by a qualified testing agency, indicating that each of the following complies with requirements:

1. Power-actuated mechanical fasteners.

2. Acoustical roof deck.

D. Evaluation Reports: For steel deck, from ICC-ES.

E. Field quality-control reports.

1.5 QUALITY ASSURANCE

A. Testing Agency Qualifications: Qualified according to ASTM E 329 for testing indicated.

B. Welding Qualifications: Qualify procedures and personnel according to AWS D1.3/D1.3M, "Structural Welding Code - Sheet Steel."

1.6 DELIVERY, STORAGE, AND HANDLING

A. Protect steel deck from corrosion, deformation, and other damage during delivery, storage, and handling.

B. Stack steel deck on platforms or pallets and slope to provide drainage. Protect with a waterproof covering and ventilate to avoid condensation.

1. Protect and ventilate acoustical cellular roof deck with factory-installed insulation to maintain insulation free of moisture.

C. Rusty or mud-spattered decking shall not be erected.

PART 2 - PRODUCTS

2.1 PERFORMANCE REQUIREMENTS

A. AISI Specifications: Comply with calculated structural characteristics of steel deck according to AISI's "North American Specification for the Design of Cold-Formed Steel Structural Members."

B. Fire-Resistance Ratings: Comply with ASTM E 119; testing by a qualified testing agency. Identify products with appropriate markings of applicable testing agency.

1. Indicate design designations from UL's "Fire Resistance Directory" or from the listings of another qualified testing agency.

2.2 ROOF DECK

A. Manufacturers: Subject to compliance with requirements, available manufacturers offering products that may be incorporated into the Work include, but are not limited to, the following:

1. Canam United States; Canam Group Inc.
2. CMC Joist & Deck.

3. Consolidated Systems, Inc.; Metal Dek Group.
4. Epic Metals Corporation.
5. New Millennium Building Systems, LLC.
6. Nucor Corp.; Vulcraft Group.
7. Wheeling Corrugating Company; Div. of Wheeling-Pittsburgh Steel Corporation.

B. Roof Deck: Fabricate panels, without top-flange stiffening grooves, to comply with "SDI Specifications and Commentary for Steel Roof Deck," in SDI Publication No. 31, and with the following:

1. Galvanized-Steel Sheet: ASTM A 653/A 653M, Structural Steel (SS), Grade 33 (230), G60 (Z180) zinc coating.

2. Deck Profile: As indicated.
3. Cellular Deck Profile: As indicated.
4. Profile Depth: As indicated.
5. Design Uncoated-Steel Thickness: As indicated.
6. Span Condition: Triple span or more.
7. Side Laps: Overlapped.

2.3 ACOUSTICAL ROOF DECK

A. Manufacturers: Subject to compliance with requirements, available manufacturers offering products that may be incorporated into the Work include, but are not limited to, the following:

B. Basis-of-Design Product: Subject to compliance with requirements, provide or comparable product by one of the following:
1. Canam United States; Canam Group Inc.
2. CMC Joist & Deck.
3. Consolidated Systems, Inc.; Metal Dek Group.
4. Epic Metals Corporation.
5. New Millennium Building Systems, LLC.
6. Nucor Corp.; Vulcraft Group.
7. Wheeling Corrugating Company; Div. of Wheeling-Pittsburgh Steel Corporation.

C. Acoustical Roof Deck: Fabricate panels, without top-flange stiffening grooves, to comply with "SDI Specifications and Commentary for Steel Roof Deck," in SDI Publication No. 31, and with the following:
1. Galvanized and Shop-Primed Steel Sheet: ASTM A 653/A 653M, Structural Steel (SS), Grade 33 (230), G60 (Z180) zinc coating; cleaned, pretreated, and primed with manufacturer's standard baked-on, rust-inhibitive primer.

   a. Color: Manufacturer's standard.
2. Deck Profile: As indicated.
3. Cellular Deck Profile: As indicated.
4. Profile Depth: As indicated.
5. Design Uncoated-Steel Thickness: As indicated.
6. Design Uncoated-Steel Thicknesses; Deck Unit/Bottom Plate: As indicated.
7. Span Condition: Triple span or more.

8. Side Laps: Overlapped.
9. Acoustical Perforations: Cellular deck units with manufacturer's standard perforated flat-bottom plate welded to ribbed deck.
10. Sound-Absorbing Insulation: Manufacturer's standard premolded roll or strip of glass or mineral fiber.

    a. Factory install sound-absorbing insulation into cells of cellular deck.

11. Acoustical Performance: NRC 0.90, tested according to ASTM C 423.

2.4 COMPOSITE FLOOR DECK

A. Manufacturers: Subject to compliance with requirements, available manufacturers offering products that may be incorporated into the Work include, but are not limited to, the following:
   1. Canam United States; Canam Group Inc.
   2. CMC Joist & Deck.
   3. Consolidated Systems, Inc.; Metal Dek Group.
   4. Epic Metals Corporation.
   5. New Millennium Building Systems, LLC.
   6. Nucor Corp.; Vulcraft Group.
   7. Wheeling Corrugating Company; Div. of Wheeling-Pittsburgh Steel Corporation.

B. Composite Floor Deck: Fabricate panels, with integrally embossed or raised pattern ribs and interlocking side laps, to comply with "SDI Specifications and Commentary for Composite Steel Floor Deck," in SDI Publication No. 31, with the minimum section properties indicated, and with the following:
   1. Galvanized-Steel Sheet: ASTM A 653/A 653M, Structural Steel (SS), Grade 33 (230), G60 (Z180 zinc coating.
   2. Profile Depth: 1-1/2 inches (38 mm).
   3. Design Uncoated-Steel Thickness: As indicated.
   4. Span Condition: Triple span or more.

2.5 ACCESSORIES

A. General: Provide manufacturer's standard accessory materials for deck that comply with requirements indicated.

B. Mechanical Fasteners: Corrosion-resistant, low-velocity, power-actuated or pneumatically driven carbon-steel fasteners; or self-drilling, self-threading screws.

C. Side-Lap Fasteners: Corrosion-resistant, hexagonal washer head; self-drilling, carbon-steel screws, No. 10 (4.8-mm) minimum diameter.

D. Flexible Closure Strips: Vulcanized, closed-cell, synthetic rubber.

E. Miscellaneous Sheet Metal Deck Accessories: Steel sheet, minimum yield strength of 33,000 psi (230 MPa), not less than 0.0359-inch (0.91-mm) design uncoated thickness, of same material and finish as deck; of profile indicated or required for application.

F. Pour Stops and Girder Fillers: Steel sheet, minimum yield strength of 33,000 psi (230 MPa), of same material and finish as deck, and of thickness and profile recommended by SDI Publication No. 31 for overhang and slab depth.

G. Column Closures, End Closures, Z-Closures, and Cover Plates: Steel sheet, of same material, finish, and thickness as deck unless otherwise indicated.

H. Galvanizing Repair Paint: ASTM A 780/A 780M.

I. Repair Paint: Manufacturer's standard rust-inhibitive primer of same color as primer.

PART 3 - EXECUTION

3.1 EXAMINATION

A. Examine supporting frame and field conditions for compliance with requirements for installation tolerances and other conditions affecting performance of the Work.

B. Proceed with installation only after unsatisfactory conditions have been corrected.

3.2 INSTALLATION, GENERAL

A. Install deck panels and accessories according to applicable specifications and commentary in SDI Publication No. 31, manufacturer's written instructions, and requirements in this Section.

B. Install temporary shoring before placing deck panels if required to meet deflection limitations.

C. Locate deck bundles to prevent overloading of supporting members.

D. Place deck panels on supporting frame and adjust to final position with ends accurately aligned and bearing on supporting frame before being permanently fastened. Do not stretch or contract side-lap interlocks.

1. Align cellular deck panels over full length of cell runs and align cells at ends of abutting panels.

E. Place deck panels flat and square and fasten to supporting frame without warp or deflection.

F. Cut and neatly fit deck panels and accessories around openings and other work projecting through or adjacent to deck.

G. Provide additional reinforcement and closure pieces at openings as required for strength, continuity of deck, and support of other work.

H. Comply with AWS requirements and procedures for manual shielded metal arc welding, appearance and quality of welds, and methods used for correcting welding work.

I. Mechanical fasteners may be used in lieu of welding to fasten deck. Locate mechanical fasteners and install according to deck manufacturer's written instructions.

3.3 ROOF-DECK INSTALLATION

A. Fasten roof-deck panels to steel supporting members by arc spot (puddle) welds of the surface diameter indicated or arc seam welds with an equal perimeter that is not less than 1-1/2 inches (38 mm) long, and as follows:

1. Weld Diameter: 5/8 inch (16 mm), nominal.
2. Weld Spacing: Weld edge and interior ribs of deck units with a minimum of two welds per deck unit at each support. Space welds 12 inches (305 mm) apart.

B. Side-Lap and Perimeter Edge Fastening: Fasten side laps and perimeter edges of panels between supports, at intervals not exceeding the lesser of one-half of the span or 36 inches (914 mm), and as follows:

1. Mechanically fasten with self-drilling, No. 10 (4.8-mm-) diameter or larger, carbon-steel screws.

C. End Bearing: Install deck ends over supporting frame with a minimum end bearing of 1-1/2 inches (38 mm), with end joints as follows:

1. End Joints: Lapped 2 inches (51 mm) minimum or butted at Contractor's option.

D. Miscellaneous Roof-Deck Accessories: Install ridge and valley plates, finish strips, end closures, and reinforcing channels according to deck manufacturer's written instructions. Weld or mechanically fasten to substrate to provide a complete deck installation.

1. Weld cover plates at changes in direction of roof-deck panels unless otherwise indicated.

E. Flexible Closure Strips: Install flexible closure strips over partitions, walls, and where indicated. Install with adhesive according to manufacturer's written instructions to ensure complete closure.

3.4 FLOOR-DECK INSTALLATION

A. Fasten floor-deck panels to steel supporting members by arc spot (puddle) welds of the surface diameter indicated and as follows:

1. Weld Diameter: 5/8 inch (16 mm), nominal.
2. Weld Spacing: Weld edge ribs of panels at each support. Space additional welds an average of 12 inches (305 mm) apart, but not more than 18 inches (457 mm) apart.
3. Weld Spacing: Space and locate welds as indicated.
4. Weld Washers: Install weld washers at each weld location.

B. Side-Lap and Perimeter Edge Fastening: Fasten side laps and perimeter edges of panels between supports, at intervals not exceeding the lesser of one-half of the span or 36 inches (914 mm), and as follows:

1. Mechanically fasten with self-drilling, No. 10 (4.8-mm-) diameter or larger, carbon-steel screws.

C. End Bearing: Install deck ends over supporting frame with a minimum end bearing of 1-1/2 inches (38 mm) with end joints as follows:

1. End Joints: Lapped or butted at Contractor's option.

D. Pour Stops and Girder Fillers: Weld steel sheet pour stops and girder fillers to supporting structure according to SDI recommendations unless otherwise indicated.

E. Floor-Deck Closures: Weld steel sheet column closures, cell closures, and Z-closures to deck, according to SDI recommendations, to provide tight-fitting closures at open ends of ribs and sides of deck.

3.5 FIELD QUALITY CONTROL

A. Testing Agency: Owner will engage a qualified testing agency to perform tests and inspections.

B. Field welds will be subject to inspection.

C. Prepare test and inspection reports.

3.6 PROTECTION

A. Galvanizing Repairs: Prepare and repair damaged galvanized coatings on both surfaces of deck with galvanized repair paint according to ASTM A 780/A 780M and manufacturer's written instructions.

B. Repair Painting: Wire brushing, cleaning, and repair painting of rust spots, welds, and abraded areas of deck are included in Section 099123 "Interior Painting."

END OF SECTION 053100

SECTION 054000 - COLD-FORMED METAL FRAMING

PART 1 - GENERAL

1.1 RELATED DOCUMENTS

A. Drawings and general provisions of the Contract, including General and Supplementary Conditions and Division 01 Specification Sections, apply to this Section.

1.2 SUMMARY

A. Section Includes:

1. Exterior non-load-bearing wall framing.
2. Ceiling joist framing.
3. Soffit framing.
4. All members indicated on drawings as "Cold-Formed" and/or 20 gauge or heavier.

B. Related Requirements:

1. Section 055000 "Metal Fabrications" for masonry shelf angles and connections.
2. Section 092116.23 "Gypsum Board Shaft Wall Assemblies" for interior non-load-bearing, metal-stud-framed, shaft-wall assemblies.
3. Section 092216 "Non-Structural Metal Framing" for interior non-load-bearing, metal-stud framing and ceiling-suspension assemblies.

1.3 PREINSTALLATION MEETINGS

A. Preinstallation Conference: Conduct conference at Project site.

1.4 ACTION SUBMITTALS

A. Product Data: For each type of cold-formed steel framing product and accessory.

B. Shop Drawings:

1. Include layout, spacings, sizes, thicknesses, and types of cold-formed steel framing; fabrication; and fastening and anchorage details, including mechanical fasteners.
2. Indicate reinforcing channels, opening framing, supplemental framing, strapping, bracing, bridging, splices, accessories, connection details, and attachment to adjoining work.

C. Delegated-Design Submittal: For cold-formed steel framing.

1.5 INFORMATIONAL SUBMITTALS

A. Product Test Reports: For each listed product, for tests performed by manufacturer and witnessed by a qualified testing agency or a qualified testing agency.

1. Expansion anchors.
2. Power-actuated anchors.
3. Mechanical fasteners.

1.6 QUALITY ASSURANCE

A. Testing Agency Qualifications: Qualified according to ASTM E 329 for testing indicated.

B. Product Tests: Mill certificates or data from a qualified independent testing agency, or in-house testing with calibrated test equipment indicating steel sheet complies with requirements, including base-metal thickness, yield strength, tensile strength, total elongation, chemical requirements, and metallic-coating thickness.

C. Welding Qualifications: Qualify procedures and personnel according to the following:

1. AWS D1.1/D1.1M, "Structural Welding Code - Steel."
2. AWS D1.3/D1.3M, "Structural Welding Code - Sheet Steel."

1.7 DELIVERY, STORAGE, AND HANDLING

A. Protect cold-formed steel framing from corrosion, moisture staining, deformation, and other damage during delivery, storage, and handling.

PART 2 - PRODUCTS

2.1 MANUFACTURERS

A. Manufacturers: Subject to compliance with requirements, available manufacturers offering products that may be incorporated into the Work include, but are not limited to, the following:

1. AllSteel & Gypsum Products, Inc.
2. California Expanded Metal Products Company.
3. ClarkWestern Building Systems, Inc.
4. Consolidated Fabricators Corp.; Building Products Division.
5. Craco Mfg., Inc.
6. Custom Stud Inc.
7. Design Shapes in Steel.
8. Dietrich Metal Framing; a Worthington Industries Company.
9. Formetal Co. Inc. (The).
10. MarinoWARE.
11. Nuconsteel; a Nucor Company.
12. Olmar Supply, Inc.
13. Quail Run Building Materials, Inc.
14. SCAFCO Corporation.
15. Southeastern Stud & Components, Inc.
16. State Building Products, Inc.
17. Steel Construction Systems.
18. Steel Network, Inc. (The).
19. Steel Structural Systems.
20. Steeler, Inc.
21. Super Stud Building Products, Inc.

22. Telling Industries, LLC.
23. United Metal Products, Inc.
24. United Steel Manufacturing.

2.2 PERFORMANCE REQUIREMENTS

A. Delegated Design: Engage a qualified professional engineer, as defined in Section 014000 "Quality Requirements," to design cold-formed steel framing.

B. Structural Performance: Provide cold-formed steel framing capable of withstanding design loads within limits and under conditions indicated.

1. Design Loads: As indicated.
2. Deflection Limits: Design framing systems to withstand design loads without deflections greater than the following:

   a. Exterior Non-Load-Bearing Framing: Horizontal deflection of 1/600 of the wall height.
   b. Ceiling Joist Framing: Vertical deflection of 1/360 of the span for live loads and 1/240 for total loads of the span.

3. Design framing systems to provide for movement of framing members located outside the insulated building envelope without damage or overstressing, sheathing failure, connection failure, undue strain on fasteners and anchors, or other detrimental effects when subject to a maximum ambient temperature change of 120 deg F (67 deg C).
4. Design framing system to maintain clearances at openings, to allow for construction tolerances, and to accommodate live load deflection of primary building structure as follows:

   a. Upward and downward movement of 1 inch (25 mm).

5. Design exterior non-load-bearing wall framing to accommodate horizontal deflection without regard for contribution of sheathing materials.

C. Cold-Formed Steel Framing Design Standards:

1. Wall Studs: AISI S211.
2. Headers: AISI S212.

D. AISI Specifications and Standards: Unless more stringent requirements are indicated, comply with AISI S100 and AISI S200.

E. Fire-Resistance Ratings: Comply with ASTM E 119; testing by a qualified testing agency. Identify products with appropriate markings of applicable testing agency.

1. Indicate design designations from UL's "Fire Resistance Directory" or from the listings of another qualified testing agency.

2.3 COLD-FORMED STEEL FRAMING, GENERAL

A. Recycled Content of Steel Products: Postconsumer recycled content plus one-half of preconsumer recycled content not less than 25 percent.

B. Steel Sheet: ASTM A 1003/A 1003M, Structural Grade, Type H, metallic coated, of grade and coating weight as follows:

1. Grade: As required by structural performance.
2. Coating: G60 (Z180).

C. Steel Sheet for Vertical Deflection and Drift Clips: ASTM A 653/A 653M, structural steel, zinc coated, of grade and coating as follows:

1. Grade: 33 (230) or 50 (340), Class 1.
2. Coating: G60 (Z180).

2.4 EXTERIOR NON-LOAD-BEARING WALL FRAMING

A. Steel Studs: Manufacturer's standard C-shaped steel studs, of web depths indicated, punched, with stiffened flanges, and as follows:

1. Minimum Base-Metal Thickness: See drawings.
2. Minimum Flange Width: See drawings.
3. Minimum Section Properties: See drawings.

B. Steel Track: Manufacturer's standard U-shaped steel track, of web depths indicated, unpunched, with unstiffened flanges, and as follows:

1. Minimum Base-Metal Thickness: Matching steel studs.
2. Flange Width: 1-1/4 inches (32 mm).

C. Vertical Deflection Clips: Manufacturer's standard bypass or head clips, capable of accommodating upward and downward vertical displacement of primary structure through positive mechanical attachment to stud web.

1. Manufacturers: Subject to compliance with requirements, available manufacturers offering products that may be incorporated into the Work include, but are not limited to, the following:

a. AllSteel & Gypsum Products, Inc.
b. ClarkWestern Building Systems, Inc.
c. Dietrich Metal Framing; a Worthington Industries company.
d. MarinoWARE.
e. SCAFCO Corporation.
f. Steel Network, Inc. (The).
g. Steeler, Inc.

D. Single Deflection Track: Manufacturer's single, deep-leg, U-shaped steel track; unpunched, with unstiffened flanges, of web depth to contain studs while allowing free vertical movement, with flanges designed to support horizontal loads and transfer them to the primary structure, and as follows:

1. Minimum Base-Metal Thickness: As required by design (18 gauge minimum), or as indicated.
2. Flange Width: 1 inch (25 mm) plus the design gap for one-story structures and 1 inch (25 mm) plus twice the design gap for other applications.

E. Double Deflection Tracks: Manufacturer's double, deep-leg, U-shaped steel tracks, consisting of nested inner and outer tracks; unpunched, with unstiffened flanges.

1. Outer Track: Of web depth to allow free vertical movement of inner track, with flanges designed to support horizontal loads and transfer them to the primary structure, and as follows:

    a. Minimum Base-Metal Thickness: As required by design (18 gauge minimum).
    b. Flange Width: 1 inch (25 mm) plus the design gap for one-story structures and 1 inch (25 mm) plus twice the design gap for other applications.

2. Inner Track: Of web depth indicated, and as follows:

    a. Minimum Base-Metal Thickness: As required by design (18 gauge minimum).
    b. Flange Width: 1 inch (25 mm) plus the design gap for one-story structures and 1 inch (25 mm) plus twice the design gap for other applications.

F. Drift Clips: Manufacturer's standard bypass or head clips, capable of isolating wall stud from upward and downward vertical displacement and lateral drift of primary structure through positive mechanical attachment to stud web and structure.

2.5 CEILING JOIST FRAMING

A. Steel Ceiling Joists: Manufacturer's standard C-shaped steel sections, of web depths indicated, with stiffened flanges, and as follows:

1. Minimum Base-Metal Thickness: As required or indicated.
2. Flange Width: 1-5/8 inches (41 mm) minimum.

2.6 SOFFIT FRAMING

A. Exterior Soffit Frame: Manufacturer's standard C-shaped steel sections, of web depths indicated, with stiffened flanges, and as follows:

1. Minimum Base-Metal Thickness: As required or indicated.
2. Flange Width: 1-5/8 inches (41 mm), minimum.

2.7 FRAMING ACCESSORIES

A. Fabricate steel-framing accessories from steel sheet, ASTM A 1003/A 1003M, Structural Grade, Type H, metallic coated, of same grade and coating weight used for framing members.

B. Provide accessories of manufacturer's standard thickness and configuration, unless otherwise indicated, as follows:

1. Supplementary framing.
2. Bracing, bridging, and solid blocking.
3. Web stiffeners.
4. Anchor clips.
5. End clips.
6. Foundation clips.
7. Gusset plates.
8. Stud kickers and knee braces.
9. Joist hangers and end closures.
10. Hole reinforcing plates.
11. Backer plates.

2.8 ANCHORS, CLIPS, AND FASTENERS

A. Steel Shapes and Clips: ASTM A 36/A 36M, zinc coated by hot-dip process according to ASTM A 123/A 123M.

B. Anchor Bolts: ASTM F 1554, Grade 36, threaded carbon-steel hex-headed bolts and carbon-steel nuts; and flat, hardened-steel washers; zinc coated by hot-dip process according to ASTM A 153/A 153M, Class C.

C. Expansion Anchors: Fabricated from corrosion-resistant materials, with allowable load or strength design capacities calculated according to ICC-ES AC193 and ACI 318 greater than or equal to the design load, as determined by testing per ASTM E 488 conducted by a qualified testing agency.

D. Power-Actuated Anchors: Fastener system of type suitable for application indicated, fabricated from corrosion-resistant materials, with allowable load capacities calculated according to ICC-ES AC70, greater than or equal to the design load, as determined by testing per ASTM E 1190 conducted by a qualified testing agency.

E. Mechanical Fasteners: ASTM C 1513, corrosion-resistant-coated, self-drilling, self-tapping, steel drill screws.

1. Head Type: Low-profile head beneath sheathing, manufacturer's standard elsewhere.

F. Welding Electrodes: Comply with AWS standards.

2.9 MISCELLANEOUS MATERIALS

A. Galvanizing Repair Paint: SSPC-Paint 20 or MIL-P-21035B.

B. Cement Grout: Portland cement, ASTM C 150, Type I; and clean, natural sand, ASTM C 404. Mix at ratio of 1 part cement to 2-1/2 parts sand, by volume, with minimum water required for placement and hydration.

C. Nonmetallic, Nonshrink Grout: Premixed, nonmetallic, noncorrosive, nonstaining grout containing selected silica sands, portland cement, shrinkage-compensating agents, and plasticizing and water-reducing agents, complying with ASTM C 1107/C 1107M, with fluid consistency and 30-minute working time.

D. Shims: Load bearing, high-density multimonomer plastic, and nonleaching; or of cold-formed steel of same grade and coating as framing members supported by shims.

E. Sealer Gaskets: Closed-cell neoprene foam, 1/4 inch (6.4 mm) thick, selected from manufacturer's standard widths to match width of bottom track or rim track members.

2.10 FABRICATION

A. Fabricate cold-formed steel framing and accessories plumb, square, and true to line, and with connections securely fastened, according to referenced AISI's specifications and standards, manufacturer's written instructions, and requirements in this Section.

1. Fabricate framing assemblies using jigs or templates.
2. Cut framing members by sawing or shearing; do not torch cut.

3. Fasten cold-formed steel framing members by welding, screw fastening, clinch fastening, pneumatic pin fastening, or riveting as standard with fabricator. Wire tying of framing members is not permitted.

    a. Comply with AWS D1.3/D1.3M requirements and procedures for welding, appearance and quality of welds, and methods used in correcting welding work.
    b. Locate mechanical fasteners and install according to Shop Drawings, with screw penetrating joined members by no fewer than three exposed screw threads.

4. Fasten other materials to cold-formed steel framing by welding, bolting, pneumatic pin fastening, or screw fastening, according to Shop Drawings.

B. Reinforce, stiffen, and brace framing assemblies to withstand handling, delivery, and erection stresses. Lift fabricated assemblies to prevent damage or permanent distortion.

C. Fabrication Tolerances: Fabricate assemblies level, plumb, and true to line to a maximum allowable tolerance variation of 1/8 inch in 10 feet (1:960) and as follows:

1. Spacing: Space individual framing members no more than plus or minus 1/8 inch (3 mm) from plan location. Cumulative error shall not exceed minimum fastening requirements of sheathing or other finishing materials.
2. Squareness: Fabricate each cold-formed steel framing assembly to a maximum out-of-square tolerance of 1/8 inch (3 mm).

PART 3 - EXECUTION

3.1 EXAMINATION

A. Examine supporting substrates and abutting structural framing for compliance with requirements for installation tolerances and other conditions affecting performance of the Work.

B. Proceed with installation only after unsatisfactory conditions have been corrected.

3.2 PREPARATION

A. Before sprayed fire-resistive materials are applied, attach continuous angles, supplementary framing, or tracks to structural members indicated to receive sprayed fire-resistive materials.

B. After applying sprayed fire-resistive materials, remove only as much of these materials as needed to complete installation of cold-formed framing without reducing thickness of fire-resistive materials below that are required to obtain fire-resistance rating indicated. Protect remaining fire-resistive materials from damage.

C. Install load bearing shims or grout between the underside of load-bearing wall bottom track and the top of foundation wall or slab at locations with a gap larger than 1/4 inch (6 mm) to ensure a uniform bearing surface on supporting concrete or masonry construction.

D. Install sealer gaskets at the underside of wall bottom track or rim track and at the top of foundation wall or slab at stud or joist locations.

3.3 INSTALLATION, GENERAL

A. Cold-formed steel framing may be shop or field fabricated for installation, or it may be field assembled.

B. Install cold-formed steel framing according to AISI S200 and to manufacturer's written instructions unless more stringent requirements are indicated.

C. Install shop- or field-fabricated, cold-formed framing and securely anchor to supporting structure.

1. Screw, bolt, or weld wall panels at horizontal and vertical junctures to produce flush, even, true-to-line joints with maximum variation in plane and true position between fabricated panels not exceeding 1/16 inch (1.6 mm).

D. Install cold-formed steel framing and accessories plumb, square, and true to line, and with connections securely fastened.

1. Cut framing members by sawing or shearing; do not torch cut.
2. Fasten cold-formed steel framing members by welding, screw fastening, clinch fastening, or riveting. Wire tying of framing members is not permitted.

a. Comply with AWS D1.3/D1.3M requirements and procedures for welding, appearance and quality of welds, and methods used in correcting welding work.
b. Locate mechanical fasteners and install according to Shop Drawings, and complying with requirements for spacing, edge distances, and screw penetration.

E. Install framing members in one-piece lengths unless splice connections are indicated for track or tension members.

F. Install temporary bracing and supports to secure framing and support loads comparable in intensity to those for which structure was designed. Maintain braces and supports in place, undisturbed, until entire integrated supporting structure has been completed and permanent connections to framing are secured.

G. Do not bridge building expansion joints with cold-formed steel framing. Independently frame both sides of joints.

H. Install insulation, specified in Section 072100 "Thermal Insulation," in built-up exterior framing members, such as headers, sills, boxed joists, and multiple studs at openings, that are inaccessible on completion of framing work.

I. Fasten hole reinforcing plate over web penetrations that exceed size of manufacturer's approved or standard punched openings.

J. Erection Tolerances: Install cold-formed steel framing level, plumb, and true to line to a maximum allowable tolerance variation of 1/8 inch in 10 feet (1:960) and as follows:

1. Space individual framing members no more than plus or minus 1/8 inch (3 mm) from plan location. Cumulative error shall not exceed minimum fastening requirements of sheathing or other finishing materials.

3.4 EXTERIOR NON-LOAD-BEARING WALL INSTALLATION

A. Install continuous tracks sized to match studs. Align tracks accurately and securely anchor to supporting structure as indicated.

B. Fasten both flanges of studs to top and bottom track unless otherwise indicated. Space studs as follows:

1. Stud Spacing: 16 inches (406 mm) unless noted otherwise.

C. Set studs plumb, except as needed for diagonal bracing or required for nonplumb walls or warped surfaces and similar requirements.

D. Isolate non-load-bearing steel framing from building structure to prevent transfer of vertical loads while providing lateral support.

1. Install single deep-leg deflection tracks and anchor to building structure.
2. Install double deep-leg deflection tracks and anchor outer track to building structure.
3. Connect vertical deflection clips to bypassing or infill studs and anchor to building structure.
4. Connect drift clips to cold-formed metal framing and anchor to building structure.

E. Install horizontal bridging in wall studs, spaced vertically in rows indicated on Shop Drawings but not more than 48 inches (1220 mm) apart. Fasten at each stud intersection.

1. Top Bridging for Single Deflection Track: Install row of horizontal bridging within 12 inches (305 mm) of single deflection track. Install a combination of bridging and stud or stud-track solid blocking of width and thickness matching studs, secured to stud webs or flanges.

   a. Install solid blocking at centers indicated on Shop Drawings.

2. Bridging: Cold-rolled steel channel, welded or mechanically fastened to webs of punched studs.
3. Bridging: Combination of flat, taut, steel sheet straps of width and thickness indicated and stud-track solid blocking of width and thickness to match studs. Fasten flat straps to stud flanges and secure solid blocking to stud webs or flanges.
4. Bridging: Proprietary bridging bars installed according to manufacturer's written instructions.

F. Install miscellaneous framing and connections, including stud kickers, web stiffeners, clip angles, continuous angles, anchors, and fasteners, to provide a complete and stable wall-framing system.

3.5 CEILING JOIST AND SOFFIT INSTALLATION

A. Install perimeter joist track sized to match joists. Align and securely anchor or fasten track to supporting structure at corners, ends, and spacings indicated on Shop Drawings.

B. Install joists bearing on supporting frame, level, straight, and plumb; adjust to final position, brace, and reinforce. Fasten joists to both flanges of joist track.

C. Space joists not more than 2 inches (51 mm) from abutting walls, and as follows:

1. Joist spacing: 16 inches (406 mm) or as indicated.

D. Frame openings with built-up joist headers consisting of joist and joist track, or another combination of connected joists if indicated.

E. Install bridging at intervals indicated on Shop Drawings. Fasten bridging at each joist intersection as follows:

1. Bridging: Joist –track solid blocking of width and thickness indicated, secured to joist webs.

2. Bridging: Combination of flat, taut, steel sheet straps of width and thickness indicated and joist-track solid blocking of width and thickness indicated. Fasten flat straps to bottom flange of joists and secure solid blocking to joist webs.

F. Secure joists to load-bearing interior walls to prevent lateral movement of bottom flange.

G. Install miscellaneous joist framing and connections, including web stiffeners, closure pieces, clip angles, continuous angles, hold-down angles, anchors, and fasteners, to provide a complete and stable joist-framing assembly.

3.6 FIELD QUALITY CONTROL

A. Testing: Owner will engage a qualified independent testing and inspecting agency to perform field tests and inspections and prepare test reports.

B. Field and shop welds will be subject to testing and inspecting.

C. Testing agency will report test results promptly and in writing to Contractor and Architect.

D. Remove and replace work where test results indicate that it does not comply with specified requirements.

E. Additional testing and inspecting, at Contractor's expense, will be performed to determine compliance of replaced or additional work with specified requirements.

3.7 REPAIRS AND PROTECTION

A. Galvanizing Repairs: Prepare and repair damaged galvanized coatings on fabricated and installed cold-formed steel framing with galvanized repair paint according to ASTM A 780 and manufacturer's written instructions.

B. Provide final protection and maintain conditions, in a manner acceptable to manufacturer and Installer, that ensure that cold-formed steel framing is without damage or deterioration at time of Substantial Completion.

END OF SECTION 054000

SECTION 054400 - COLD-FORMED METAL TRUSSES

PART 1 - GENERAL

1.1 RELATED DOCUMENTS

A. Drawings and general provisions of the Contract, including General and Supplementary Conditions and Division 01 Specification Sections, apply to this Section.

1.2 SUMMARY

A. Section includes cold-formed steel framing in the form of the following:

1. Cold-formed steel trusses for roofs.

B. Related Requirements:

1. Section 052100 "Steel Joist Framing" for trusslike, steel floor or roof joists and joist girders.
2. Section 054000 "Cold-Formed Metal Framing" for cold-formed steel studs, joists, and rafters.

1.3 PREINSTALLATION MEETINGS

A. Preinstallation Conference: Conduct conference at Project site.

1.4 ACTION SUBMITTALS

A. Product Data: For each type of product.

B. Shop Drawings:

1. Include layout, spacings, sizes, thicknesses, and types of cold-formed steel trusses; fabrication; and fastening and anchorage details, including mechanical fasteners.
2. Indicate reinforcing channels, opening framing, supplemental framing, strapping, bracing, bridging, splices, accessories, connection details, and attachment to adjoining work.

C. Delegated-Design Submittal: For cold-formed steel trusses.

1.5 INFORMATIONAL SUBMITTALS

A. Qualification Data: For testing agency.

B. Welding certificates.

C. Product Test Reports: For each listed product, for tests performed by manufacturer and witnessed by a qualified testing agency.

1. Steel sheet.
2. Expansion anchors.
3. Power-actuated anchors.
4. Mechanical fasteners.
5. Miscellaneous structural clips and accessories.

D. Evaluation Reports: For post-installed anchors and power-actuated fasteners, from ICC-ES or other qualified testing agency acceptable to authorities having jurisdiction.

E. Field quality-control reports.

1.6 QUALITY ASSURANCE

A. Testing Agency Qualifications: Qualified according to ASTM E 329 for testing indicated.

B. Product Tests: Mill certificates or data from a qualified independent testing agency, or in-house testing with calibrated test equipment, indicating steel sheet complies with requirements, including base-metal thickness, yield strength, tensile strength, total elongation, chemical requirements, and metallic-coating thickness.

C. Welding Qualifications: Qualify procedures and personnel according to the following:

1. AWS D1.1/D1.1M, "Structural Welding Code - Steel."
2. AWS D1.3/D1.3M, "Structural Welding Code - Sheet Steel."

PART 2 - PRODUCTS

2.1 MANUFACTURERS

A. Manufacturers: Subject to compliance with requirements, available manufacturers offering products that may be incorporated into the Work include, but are not limited to, the following:

1. Aegis Metal Framing.
2. Genesis Worldwide Inc.
3. Marino/WARE.
4. Nuconsteel, A Nucor Company.
5. Steel Construction Systems.
6. TrusSteel; an ITW company.
7. USA Frametek.

2.2 PERFORMANCE REQUIREMENTS

A. Delegated Design: Engage a qualified professional engineer, as defined in Section 014000 "Quality Requirements," to design cold-formed steel trusses.

B. Structural Performance: Provide cold-formed steel trusses capable of withstanding design loads within limits and under conditions indicated.

1. Design Loads: As indicated on Drawings.
2. Deflection Limits: Design trusses to withstand design loads without deflections greater than the following:

   a. Roof Trusses: Vertical deflection of 1/360 of the span.
   b. Scissor Roof Trusses: Horizontal deflection of 1 inch at reactions.

3. Design trusses to provide for movement of truss members located outside the insulated building envelope without damage or overstressing, sheathing failure, connection failure, undue strain on fasteners and anchors, or other detrimental effects when subject to a maximum ambient temperature change of 120 deg F (67 deg C).

C. Cold-Formed Steel Truss Standards: Unless more stringent requirements are indicated, trusses shall comply with the following:

1. Floor and Roof Systems: AISI S210.
2. Lateral Design: AISI S213.
3. Roof Trusses: AISI S214.

D. Fire-Resistance Ratings: Comply with ASTM E 119; testing by a qualified testing agency. Identify products with appropriate markings of applicable testing agency.

1. Indicate design designations from UL or from the listings of another qualified testing agency acceptable to authorities having jurisdiction.

2.3 COLD-FORMED STEEL TRUSS MATERIALS

A. Steel Sheet: ASTM A 1003/A 1003M, Structural Grade, Type H, metallic coated, of grade and coating designation as follows:

1. Grade: As required by structural performance.
2. Coating: G60 (Z180), A60 (ZF180), AZ50 (AZ150), or GF30 (ZGF90).

2.4 ROOF TRUSSES

A. Roof Truss Members: Manufacturer's standard C-shaped steel sections.

1. Connecting Flange Width: 1-5/8 inches (41 mm) minimum at top and bottom chords connecting to sheathing or other directly fastened construction.
2. Minimum Base-Metal Thickness: 0.0329 inch (0.84 mm).

2.5 TRUSS ACCESSORIES

A. Fabricate steel-truss accessories from steel sheet, ASTM A 1003/A 1003M, Structural Grade, Type H, metallic coated steel sheet, of same grade and coating designation used for truss members.

B. Provide accessories of manufacturer's standard thickness and configuration unless otherwise indicated.

2.6 ANCHORS, CLIPS, AND FASTENERS

A. Steel Shapes and Clips: ASTM A 36/A 36M, zinc coated by hot-dip process according to ASTM A 123/A 123M.

B. Power-Actuated Fasteners: Fastener systems with working capacity greater than or equal to the design load, according to an evaluation report acceptable to authorities having jurisdiction, based on ICC-ES AC70.

C. Mechanical Fasteners: ASTM C 1513, corrosion-resistant-coated, self-drilling, self-tapping steel drill screws.

1. Head Type: Low-profile head beneath sheathing; manufacturer's standard elsewhere.

D. Welding Electrodes: Comply with AWS standards.

2.7 MISCELLANEOUS MATERIALS

A. Galvanizing Repair Paint: ASTM A 780/A 780M.

B. Shims: Load-bearing, high-density multimonomer, nonleaching plastic; or cold-formed steel of same grade and metallic coating as truss members supported by shims.

2.8 FABRICATION

A. Fabricate cold-formed steel trusses and accessories plumb, square, and true to line, and with connections securely fastened, according to referenced AISI's specifications and standards, manufacturer's written instructions, and requirements in this Section.

1. Fabricate trusses using jigs or templates.
2. Cut truss members by sawing or shearing; do not torch cut.
3. Fasten cold-formed steel truss members by welding, screw fastening, clinch fastening, pneumatic pin fastening, or riveting as standard with fabricator.

   a. Comply with AWS D1.3/D1.3M requirements and procedures for welding, appearance and quality of welds, and methods used in correcting welding work.

4. Fasten other materials to cold-formed steel trusses by welding, bolting, pneumatic pin fastening, or screw fastening, according to Shop Drawings.

B. Reinforce, stiffen, and brace trusses to withstand handling, delivery, and erection stresses. Lift fabricated trusses by means that prevent damage or permanent distortion.

C. Tolerances: Fabricate assemblies level, plumb, and true to line to a maximum allowable variation of 1/8 inch in 10 feet (1:960) and as follows:

1. Spacing: Space individual truss members no more than plus or minus 1/8 inch (3 mm) from plan location. Cumulative error shall not exceed minimum fastening requirements of sheathing or other finishing materials.
2. Squareness: Fabricate each cold-formed steel truss to a maximum out-of-square tolerance of 1/8 inch (3 mm).

PART 3 - EXECUTION

3.1 EXAMINATION

A. Examine substrates, areas, conditions, and abutting trusses and framing for compliance with requirements for installation tolerances and other conditions affecting performance of the Work.

B. Proceed with installation only after unsatisfactory conditions have been corrected.

3.2 INSTALLATION

A. Install bridge, and brace cold-formed steel trusses according to AISI S200, AISI S202, AISI S214, and manufacturer's written instructions unless more stringent requirements are indicated.

1. Coordinate with wall framing to align webs of bottom chords and load-bearing studs or continuously reinforce track to transfer loads to structure.
2. Anchor trusses securely at all bearing points.
3. Install continuous bridging and permanently brace trusses as indicated on Shop Drawings and designed according to CFSEI's Technical Note 551e, "Design Guide: Permanent Bracing of Cold-Formed Steel Trusses.".

B. Install cold-formed steel trusses and accessories true to line and location, and with connections securely fastened.

1. Erect trusses with plane of truss webs plumb and parallel to each other. Align and accurately position trusses at required spacings.
2. Erect trusses without damaging truss members or connections.
3. Fasten cold-formed steel trusses by welding or mechanical fasteners.

a. Comply with AWS D1.3/D1.3M requirements and procedures for welding, appearance and quality of welds, and methods used in correcting welding work.
b. Locate mechanical fasteners, install according to Shop Drawings, and comply with requirements for spacing, edge distances, and screw penetration.

C. Install temporary bracing and supports to secure trusses and support loads equal to those for which structure was designed. Maintain braces and supports in place, undisturbed, until entire integrated supporting structure has been completed and permanent connections to trusses are secured.

D. Truss Spacing: 48 inches (1220 mm).

E. Do not alter, cut, or remove truss members or connections of trusses.

3.3 ERECTION TOLERANCES

A. Install cold-formed steel trusses level, plumb, and true to line to a maximum allowable tolerance variation of 1/8 inch in 10 feet (1:960) and as follows:

1. Space individual trusses no more than plus or minus 1/8 inch (3 mm) from plan location. Cumulative error shall not exceed minimum fastening requirements of sheathing or other finishing materials.

3.4 FIELD QUALITY CONTROL

A. Special Inspections: Owner will engage a qualified special inspector to perform the following special inspections:

1. Cold-Formed Steel Trusses Spanning 60 ft. (18,288 mm) or Longer: Verify temporary installation restraint/bracing and the permanent individual truss member restraint/bracing are installed according to the approved truss submittal package.

B. Testing Agency: Owner will engage a qualified testing agency to perform tests and inspections.

C. Cold-formed metal trusses will be considered defective if they do not pass tests and inspections.

D. Prepare test and inspection reports.

3.5 REPAIRS AND PROTECTION

A. Galvanizing Repairs: Prepare and repair damaged galvanized coatings on fabricated and installed cold-formed steel trusses with galvanized repair paint according to ASTM A 780/A 780M and manufacturer's written instructions.

B. Provide final protection and maintain conditions, in a manner acceptable to manufacturer and Installer, that ensure that cold-formed steel trusses are without damage or deterioration at time of Substantial Completion.

END OF SECTION 054400

SECTION 055000 - METAL FABRICATIONS

PART 1 - GENERAL

1.1 RELATED DOCUMENTS

A. Drawings and general provisions of the Contract, including General and Supplementary Conditions and Division 01 Specification Sections, apply to this Section.

1.2 SUMMARY

A. Section Includes:

1. Steel framing and supports for operable partitions.
2. Steel framing and supports for overhead doors.
3. Steel framing and supports for mechanical and electrical equipment.
4. Steel framing and supports for applications where framing and supports are not specified in other Sections.
5. Elevator machine beams, hoist beams.
6. Steel shapes for supporting elevator door sills.
7. Elevator pit sump covers.
8. Metal bollards.
9. Loose bearing and leveling plates for applications where they are not specified in other Sections.

B. Products furnished, but not installed, under this Section include the following:

1. Loose steel lintels.
2. Anchor bolts, steel pipe sleeves, slotted-channel inserts, and wedge-type inserts indicated to be cast into concrete or built into unit masonry.

C. Related Requirements:

1. Section 042000 "Unit Masonry" for installing loose lintels, anchor bolts, and other items built into unit masonry.
2. Section 051200 "Structural Steel Framing."
3. Section 055133 "Metal Ladders."

1.3 COORDINATION

A. Coordinate selection of shop primers with topcoats to be applied over them. Comply with paint and coating manufacturers' written recommendations to ensure that shop primers and topcoats are compatible with one another.

B. Coordinate installation of metal fabrications that are anchored to or that receive other work. Furnish setting drawings, templates, and directions for installing anchorages, including sleeves, concrete inserts, anchor bolts, and items with integral anchors, that are to be embedded in concrete or masonry. Deliver such items to Project site in time for installation.

1.4 ACTION SUBMITTALS

A. Product Data: For the following:

1. Paint products.
2. Grout.

B. Shop Drawings: Show fabrication and installation details. Include plans, elevations, sections, and details of metal fabrications and their connections. Show anchorage and accessory items. Provide Shop Drawings for the following:

1. Steel framing and supports for overhead doors.
2. Steel framing and supports for mechanical and electrical equipment.
3. Steel framing and supports for applications where framing and supports are not specified in other Sections.
4. Elevator machine beams, hoist beams.
5. Steel shapes for supporting elevator door sills.
6. Elevator pit sump covers.
7. Metal bollards.
8. Loose steel lintels.
9. Support strut systems, including structural reactions.

1.5 INFORMATIONAL SUBMITTALS

A. Mill Certificates: Signed by stainless-steel manufacturers, certifying that products furnished comply with requirements.

B. Welding certificates.

C. Paint Compatibility Certificates: From manufacturers of topcoats applied over shop primers, certifying that shop primers are compatible with topcoats.

D. Research/Evaluation Reports: For post-installed anchors, from ICC-ES.

1.6 QUALITY ASSURANCE

A. Welding Qualifications: Qualify procedures and personnel according to AWS D1.1/D1.1M, "Structural Welding Code - Steel."

B. Welding Qualifications: Qualify procedures and personnel according to the following:

1. AWS D1.1/D1.1M, "Structural Welding Code - Steel."
2. AWS D1.2/D1.2M, "Structural Welding Code - Aluminum."
3. AWS D1.6/D1.6M, "Structural Welding Code - Stainless Steel."

1.7 FIELD CONDITIONS

A. Field Measurements: Verify actual locations of walls and other construction contiguous with metal fabrications by field measurements before fabrication.

PART 2 - PRODUCTS

2.1 PERFORMANCE REQUIREMENTS

A. Thermal Movements: Allow for thermal movements from ambient and surface temperature changes acting on exterior metal fabrications by preventing buckling, opening of joints, overstressing of components, failure of connections, and other detrimental effects.

1. Temperature Change: 120 deg F (67 deg C), ambient; 180 deg F (100 deg C), material surfaces.

2.2 METALS

A. Metal Surfaces, General: Provide materials with smooth, flat surfaces unless otherwise indicated. For metal fabrications exposed to view in the completed Work, provide materials without seam marks, roller marks, rolled trade names, or blemishes.

B. Steel Plates, Shapes, and Bars: ASTM A 36/A 36M.

C. Stainless-Steel Sheet, Strip, and Plate: ASTM A 240/A 240M or ASTM A 666, Type 304.

D. Stainless-Steel Bars and Shapes: ASTM A 276, Type 304.

E. Rolled-Steel Floor Plate: ASTM A 786/A 786M, rolled from plate complying with ASTM A 36/A 36M or ASTM A 283/A 283M, Grade C or D.

F. Rolled-Stainless-Steel Floor Plate: ASTM A 793.

G. Steel Tubing: ASTM A 500/A 500M, cold-formed steel tubing.

H. Steel Pipe: ASTM A 53/A 53M, Standard Weight (Schedule 40) unless otherwise indicated.

I. Slotted Channel Framing: Cold-formed metal box channels (struts) complying with MFMA-4.

1. Size of Channels: 1-5/8 by 1-5/8 inches (41 by 41 mm).
2. Material: Galvanized steel, ASTM A 653/A 653M, commercial steel, Type B, with G90 (Z275) coating; not less than 0.064-inch (1.6-mm) nominal thickness.
3. Material: Cold-rolled steel, ASTM A 1008/A 1008M, commercial steel, Type B; not less than 0.0528-inch (1.35-mm) minimum thickness; hot-dip galvanized after fabrication.

J. Cast Iron: Either gray iron, ASTM A 48/A 48M, or malleable iron, ASTM A 47/A 47M, unless otherwise indicated.

K. Aluminum Plate and Sheet: ASTM B 209 (ASTM B 209M), Alloy 6061-T6.

L. Aluminum Extrusions: ASTM B 221 (ASTM B 221M), Alloy 6063-T6.

M. Aluminum-Alloy Rolled Tread Plate: ASTM B 632/B 632M, Alloy 6061-T6.

N. Aluminum Castings: ASTM B 26/B 26M, Alloy 443.0-F.

2.3 FASTENERS

A. General: Unless otherwise indicated, provide Type 304 stainless-steel fasteners for exterior use and zinc-plated fasteners with coating complying with ASTM B 633 or ASTM F 1941 (ASTM F 1941M), Class Fe/Zn 5, at exterior walls. Select fasteners for type, grade, and class required.

1. Provide stainless-steel fasteners for fastening aluminum.
2. Provide stainless-steel fasteners for fastening stainless steel.
3. Provide stainless-steel fasteners for fastening nickel silver.
4. Provide bronze fasteners for fastening bronze.

B. Steel Bolts and Nuts: Regular hexagon-head bolts, ASTM A 307, Grade A (ASTM F 568M, Property Class 4.6); with hex nuts, ASTM A 563 (ASTM A 563M); and, where indicated, flat washers.

C. Steel Bolts and Nuts: Regular hexagon-head bolts, ASTM A 325, Type 3 (ASTM A 325M, Type 3); with hex nuts, ASTM A 563, Grade C3 (ASTM A 563M, Class 8S3); and, where indicated, flat washers.

D. Stainless-Steel Bolts and Nuts: Regular hexagon-head annealed stainless-steel bolts, ASTM F 593 (ASTM F 738M); with hex nuts, ASTM F 594 (ASTM F 836M); and, where indicated, flat washers; Alloy Group 1 (A1).

E. Anchor Bolts: ASTM F 1554, Grade 36, of dimensions indicated; with nuts, ASTM A 563 (ASTM A 563M); and, where indicated, flat washers.

1. Hot-dip galvanize or provide mechanically deposited, zinc coating where item being fastened is indicated to be galvanized.

F. Anchors, General: Anchors capable of sustaining, without failure, a load equal to six times the load imposed when installed in unit masonry and four times the load imposed when installed in concrete, as determined by testing according to ASTM E 488/E 488M, conducted by a qualified independent testing agency.

G. Cast-in-Place Anchors in Concrete: Either threaded type or wedge type unless otherwise indicated; galvanized ferrous castings, either ASTM A 47/A 47M malleable iron or ASTM A 27/A 27M cast steel. Provide bolts, washers, and shims as needed, all hot-dip galvanized per ASTM F 2329.

H. Post-Installed Anchors: Torque-controlled expansion anchors or chemical anchors.

1. Material for Interior Locations: Carbon-steel components zinc plated to comply with ASTM B 633 or ASTM F 1941 (ASTM F 1941M), Class Fe/Zn 5, unless otherwise indicated.
2. Material for Exterior Locations and Where Stainless Steel Is Indicated: Alloy Group 1 (A1) stainless-steel bolts, ASTM F 593 (ASTM F 738M), and nuts, ASTM F 594 (ASTM F 836M).

I. Slotted-Channel Inserts: Cold-formed, hot-dip galvanized-steel box channels (struts) complying with MFMA-4, 1-5/8 by 7/8 inches (41 by 22 mm) by length indicated with anchor straps or studs not less than 3 inches (75 mm) long at not more than 8 inches (200 mm) o.c. Provide with temporary filler and tee-head bolts, complete with washers and nuts, all zinc-plated to comply with ASTM B 633, Class Fe/Zn 5, as needed for fastening to inserts.

2.4 MISCELLANEOUS MATERIALS

A. Shop Primers: Provide primers that comply with Section 099113 "Exterior Painting," Section 099123 Interior Painting," and Section 099600 "High-Performance Coatings."

1. Locations: All work that will be field painted, unless otherwise noted.

B. Universal Shop Primer: Fast-curing, lead- and chromate-free, universal modified-alkyd primer complying with MPI#79 and compatible with topcoat.

1. Use primer containing pigments that make it easily distinguishable from zinc-rich primer.
2. Locations: Work that will not be field painted.

C. Shop Primer for Galvanized Steel: Primer formulated for exterior use over zinc-coated metal and compatible with finish paint systems indicated.

D. Galvanizing Repair Paint: High-zinc-dust-content paint complying with SSPC-Paint 20 and compatible with paints specified to be used over it.

E. Bituminous Paint: Cold-applied asphalt emulsion complying with ASTM D 1187/D 1187M.

F. Nonshrink, Nonmetallic Grout: Factory-packaged, nonstaining, noncorrosive, nongaseous grout complying with ASTM C 1107/C 1107M. Provide grout specifically recommended by manufacturer for interior and exterior applications.

G. Concrete: Comply with requirements in Section 033000 "Cast-in-Place Concrete" for normal-weight, air-entrained, concrete with a minimum 28-day compressive strength of 3000 psi (20 MPa).

2.5 FABRICATION, GENERAL

A. Shop Assembly: Preassemble items in the shop to greatest extent possible. Disassemble units only as necessary for shipping and handling limitations. Use connections that maintain structural value of joined pieces. Clearly mark units for reassembly and coordinated installation.

B. Cut, drill, and punch metals cleanly and accurately. Remove burrs and ease edges to a radius of approximately 1/32 inch (1 mm) unless otherwise indicated. Remove sharp or rough areas on exposed surfaces.

C. Form bent-metal corners to smallest radius possible without causing grain separation or otherwise impairing work.

D. Form exposed work with accurate angles and surfaces and straight edges.

E. Weld corners and seams continuously to comply with the following:

1. Use materials and methods that minimize distortion and develop strength and corrosion resistance of base metals.
2. Obtain fusion without undercut or overlap.
3. Remove welding flux immediately.
4. At exposed connections, finish exposed welds and surfaces smooth and blended so no roughness shows after finishing and contour of welded surface matches that of adjacent surface.

F. Form exposed connections with hairline joints, flush and smooth, using concealed fasteners or welds where possible. Where exposed fasteners are required, use Phillips (countersunk) fasteners unless otherwise indicated. Locate joints where least conspicuous.

G. Fabricate seams and other connections that are exposed to weather in a manner to exclude water. Provide weep holes where water may accumulate.

H. Cut, reinforce, drill, and tap metal fabrications as indicated to receive finish hardware, screws, and similar items.

I. Provide for anchorage of type indicated; coordinate with supporting structure. Space anchoring devices to secure metal fabrications rigidly in place and to support indicated loads.

J. Where units are indicated to be cast into concrete or built into masonry, equip with integrally welded steel strap anchors, 1/8 by 1-1/2 inches (3.2 by 38 mm), with a minimum 6-inch (150-mm) embedment and 2-inch (50-mm) hook, not less than 8 inches (200 mm) from ends and corners of units and 24 inches (600 mm) o.c., unless otherwise indicated.

2.6 MISCELLANEOUS FRAMING AND SUPPORTS

A. General: Provide steel framing and supports not specified in other Sections as needed to complete the Work.

B. Fabricate units from steel shapes, plates, and bars of welded construction unless otherwise indicated. Fabricate to sizes, shapes, and profiles indicated and as necessary to receive adjacent construction.

1. Fabricate units from slotted channel framing where indicated.
2. Furnish inserts for units installed after concrete is placed.

C. Fabricate supports for operable partitions from continuous steel beams of sizes indicated with attached bearing plates, anchors, and braces as recommended by partition manufacturer. Drill or punch bottom flanges of beams to receive partition track hanger rods; locate holes where indicated on operable partition Shop Drawings.

D. Galvanize miscellaneous framing and supports where indicated.

E. Prime miscellaneous framing and supports with primer specified in Section 099600 "High-Performance Coatings" where indicated.

2.7 ELEVATOR PIT SUMP COVERS

A. Fabricate from welded or pressure-locked steel bar grating Limit openings in gratings to no more than 1/2 inch (12 mm) in least dimension.

B. Provide steel angle supports as indicated.

2.8 MISCELLANEOUS STEEL TRIM

A. Unless otherwise indicated, fabricate units from steel shapes, plates, and bars of profiles shown with continuously welded joints and smooth exposed edges. Miter corners and use concealed field splices where possible.

B. Provide cutouts, fittings, and anchorages as needed to coordinate assembly and installation with other work.

1. Provide with integrally welded steel strap anchors for embedding in concrete or masonry construction.

C. Galvanize and prime miscellaneous steel trim.

2.9 METAL BOLLARDS

A. Fabricate metal bollards from Schedule 40 steel pipe.

1. Cap bollards with 1/4-inch- (6.4-mm-) thick steel plate.
2. Where bollards are indicated to receive controls for door operators, provide cutouts for controls and holes for wire.
3. Where bollards are indicated to receive light fixtures, provide cutouts for fixtures and holes for wire.

B. Fabricate sleeves for bollard anchorage from steel pipe with 1/4-inch- (6.4-mm-) thick steel plate welded to bottom of sleeve. Make sleeves not less than 8 inches (200 mm) deep and 3/4 inch (19 mm) larger than OD of bollard.

C. Fabricate internal sleeves for removable bollards from Schedule 40 steel pipe or 1/4-inch (6.4-mm) wall-thickness steel tubing with an OD approximately 1/16 inch (1.5 mm) less than ID of bollards. Match drill sleeve and bollard for 3/4-inch (19-mm) steel machine bolt.

D. Prime bollards with primer specified in Section 099113 "Exterior Painting."

2.10 LOOSE BEARING AND LEVELING PLATES

A. Provide loose bearing and leveling plates for steel items bearing on masonry or concrete construction. Drill plates to receive anchor bolts and for grouting.

B. Galvanize plates.

2.11 LOOSE STEEL LINTELS

A. Fabricate loose steel lintels from steel angles and shapes of size indicated for openings and recesses in masonry walls and partitions at locations indicated. Fabricate in single lengths for each opening unless otherwise indicated. Weld adjoining members together to form a single unit where indicated.

B. Size loose lintels to provide bearing length at each side of openings equal to 1/12 of clear span, but not less than 8 inches (200 mm) unless otherwise indicated.

C. Galvanize loose steel lintels located in exterior walls.

2.12 FINISHES, GENERAL

A. Finish metal fabrications after assembly.

B. Finish exposed surfaces to remove tool and die marks and stretch lines, and to blend into surrounding surface.

2.13 STEEL AND IRON FINISHES

A. Galvanizing: Hot-dip galvanize items as indicated to comply with ASTM A 153/A 153M for steel and iron hardware and with ASTM A 123/A 123M for other steel and iron products.

1. Do not quench or apply post galvanizing treatments that might interfere with paint adhesion.

B. Preparation for Shop Priming Galvanized Items: After galvanizing, thoroughly clean railings of grease, dirt, oil, flux, and other foreign matter, and treat with metallic phosphate process.

C. Shop prime iron and steel items concealed to view that are not indicated to be galvanized unless they are to be embedded in concrete, sprayed-on fireproofing, or masonry, or unless otherwise indicated.

1. Shop prime with primers specified in Section 099113 "Exterior Painting," Section 099123 "Interior Painting," and Section 099600 "High-Performance Coatings" unless universal shop primer is indicated.

D. Preparation for Shop Priming: Prepare surfaces to comply with requirements indicated below:

1. Exterior Items: SSPC-SP 6/NACE No. 3, "Commercial Blast Cleaning."
2. Items Indicated to Receive Zinc-Rich Primer: SSPC-SP 6/NACE No. 3, "Commercial Blast Cleaning."
3. Items Indicated to Receive Primers Specified in Section 099113 "Exterior Painting," Section 099123 "Interior Painting," and Section 099600 "High-Performance Coatings": SSPC-SP 6/NACE No. 3, "Commercial Blast Cleaning."
4. Other Items: SSPC-SP 3, "Power Tool Cleaning."

E. Shop Priming: Apply shop primer to comply with SSPC-PA 1, "Paint Application Specification No. 1: Shop, Field, and Maintenance Painting of Steel," for shop painting.

1. Stripe paint corners, crevices, bolts, welds, and sharp edges.

2.14 ALUMINUM FINISHES

A. As-Fabricated Finish: AA-M12.

B. Clear Anodic Finish: AAMA 611, Class I, AA-M12C22A41.

PART 3 - EXECUTION

3.1 INSTALLATION, GENERAL

A. Cutting, Fitting, and Placement: Perform cutting, drilling, and fitting required for installing metal fabrications. Set metal fabrications accurately in location, alignment, and elevation; with edges and surfaces level, plumb, true, and free of rack; and measured from established lines and levels.

B. Fit exposed connections accurately together to form hairline joints. Weld connections that are not to be left as exposed joints but cannot be shop welded because of shipping size limitations. Do not weld, cut, or abrade surfaces of exterior units that have been hot-dip galvanized after fabrication and are for bolted or screwed field connections.

C. Field Welding: Comply with the following requirements:

1. Use materials and methods that minimize distortion and develop strength and corrosion resistance of base metals.
2. Obtain fusion without undercut or overlap.
3. Remove welding flux immediately.
4. At exposed connections, finish exposed welds and surfaces smooth and blended so no roughness shows after finishing and contour of welded surface matches that of adjacent surface.

D. Fastening to In-Place Construction: Provide anchorage devices and fasteners where metal fabrications are required to be fastened to in-place construction. Provide threaded fasteners for use with concrete and masonry inserts, toggle bolts, through bolts, lag screws, wood screws, and other connectors.

E. Provide temporary bracing or anchors in formwork for items that are to be built into concrete, masonry, or similar construction.

F. Corrosion Protection: Coat concealed surfaces of aluminum that come into contact with grout, concrete, masonry, wood, or dissimilar metals with the following:

1. Cast Aluminum: Heavy coat of bituminous paint.
2. Extruded Aluminum: Two coats of clear lacquer.

3.2 INSTALLING MISCELLANEOUS FRAMING AND SUPPORTS

A. General: Install framing and supports to comply with requirements of items being supported, including manufacturers' written instructions and requirements indicated on Shop Drawings.

B. Anchor supports for overhead doors securely to, and rigidly brace from, building structure.

C. Support steel girders on solid grouted masonry, concrete, or steel pipe columns. Secure girders with anchor bolts embedded in grouted masonry or concrete or with bolts through top plates of pipe columns.

1. Where grout space under bearing plates is indicated for girders supported on concrete or masonry, install as specified in "Installing Bearing and Leveling Plates" Article.

D. Install pipe columns on concrete footings with grouted baseplates. Position and grout column baseplates as specified in "Installing Bearing and Leveling Plates" Article.

1. Grout baseplates of columns supporting steel girders after girders are installed and leveled.

3.3 INSTALLING METAL BOLLARDS

A. Fill metal-capped bollards solidly with concrete and allow concrete to cure seven days before installing.

1. Do not fill removable bollards with concrete.

B. Anchor internal sleeves for removable bollards in formed or core-drilled holes not less than 8 inches (200 mm) deep and 3/4 inch (19 mm) larger than OD of sleeve. Fill annular space around internal sleeves solidly with nonshrink grout; mixed and placed to comply with grout manufacturer's written instructions. Slope grout up approximately 1/8 inch (3 mm) toward internal sleeve.

C. Place removable bollards over internal sleeves and secure with 3/4-inch (19-mm) machine bolts and nuts. After tightening nuts, drill holes in bolts for inserting padlocks. Owner furnishes padlocks.

D. Fill bollards solidly with concrete, mounding top surface to shed water.

1. Do not fill removable bollards with concrete.

3.4 INSTALLING BEARING AND LEVELING PLATES

A. Clean concrete and masonry bearing surfaces of bond-reducing materials, and roughen to improve bond to surfaces. Clean bottom surface of plates.

B. Set bearing and leveling plates on wedges, shims, or leveling nuts. After bearing members have been positioned and plumbed, tighten anchor bolts. Do not remove wedges or shims but, if protruding, cut off flush with edge of bearing plate before packing with nonshrink grout. Pack grout solidly between bearing surfaces and plates to ensure that no voids remain.

3.5 ADJUSTING AND CLEANING

A. Touchup Painting: Immediately after erection, clean field welds, bolted connections, and abraded areas. Paint uncoated and abraded areas with the same material as used for shop painting to comply with SSPC-PA 1 for touching up shop-painted surfaces.

1. Apply by brush or spray to provide a minimum 2.0-mil (0.05-mm) dry film thickness.

B. Touchup Painting: Cleaning and touchup painting of field welds, bolted connections, and abraded areas of shop paint are specified in Section 099113 "Exterior Painting" And Section 099123 "Interior Painting."

C. Galvanized Surfaces: Clean field welds, bolted connections, and abraded areas and repair galvanizing to comply with ASTM A 780/A 780M.

END OF SECTION 055000

SECTION 055113 – METAL PAN STAIRS

PART 1 - GENERAL

1.1 RELATED DOCUMENTS

A. Drawings and general provisions of the Contract, including General and Supplementary Conditions and Division 01 Specification Sections, apply to this Section.

1.2 SUMMARY

A. This Section includes the following:

1. Preassembled steel stairs with concrete-filled treads and landings

B. Related Sections include the following:

1. Section 033000 "Cast-in-Place Concrete" for concrete fill for stair treads and platforms.
2. Section 055213 “Pipe and Tube Railings” for railings not associated with metal stairs.

1.3 PERFORMANCE REQUIREMENTS

A. Structural Performance of Stairs: Provide metal stairs capable of withstanding the effects of gravity loads and the following loads and stresses within limits and under conditions indicated:

1. Uniform Load: 100 lbf/sq. ft. (4.79 kN/sq. m).
2. Concentrated Load: 300 lbf (1.33 kN) applied on an area of 4 sq. in. (2580 sq. mm).
3. Uniform and concentrated loads need not be assumed to act concurrently.
4. Stair Framing: Capable of withstanding stresses resulting from railing loads in addition to loads specified above.
5. Limit deflection of treads, platforms, and framing members to L/240 or 1/4 inch (6.4 mm), whichever is less.

1.4 QUALITY ASSURANCE

A. Installer Qualifications: Fabricator of products.

B. NAAMM Stair Standard: Comply with "Recommended Voluntary Minimum Standards for Fixed Metal Stairs" in NAAMM AMP 510, "Metal Stairs Manual," for class of stair designated, unless more stringent requirements are indicated.

1. Preassembled Stairs: Commercial class.

C. Welding: Qualify procedures and personnel according to the following:

1. AWS D1.1, "Structural Welding Code--Steel."
2. AWS D1.3, "Structural Welding Code--Sheet Steel."

1.5 COORDINATION

A. Coordinate installation of anchorages for metal stairs. Furnish setting drawings, templates, and directions for installing anchorages, including sleeves, concrete inserts, anchor bolts, and items with integral anchors, that are to be embedded in concrete or masonry. Deliver such items to Project site in time for installation.

B. Coordinate locations of hanger rods and struts with other work so that they will not encroach on required stair width and will be within the fire-resistance-rated stair enclosure.

PART 2 - PRODUCTS

2.1 MANUFACTURERS

A. In other Part 2 articles where titles below introduce lists, the following requirements apply to product selection:

1. Available Manufacturers: Subject to compliance with requirements, manufacturers offering products that may be incorporated into the Work include, but are not limited to, manufacturers specified.

2.2 METALS, GENERAL

A. Metal Surfaces, General: Provide materials with smooth, flat surfaces, unless otherwise indicated. For components exposed to view in the completed Work, provide materials without seam marks, roller marks, rolled trade names, or blemishes.

2.3 FERROUS METALS

A. Steel Plates, Shapes, and Bars: ASTM A 36/A 36M.

B. Steel Tubing: ASTM A 500 (cold formed).

C. Rolled-Steel Floor Plate: ASTM A 786/A 786M, rolled from plate complying with ASTM A 36/A 36M or ASTM A 283/A 283M, Grade C or D.

D. Iron Castings: Either gray or malleable iron, unless otherwise indicated.

1. Malleable Iron: ASTM A 47/A 47M.

E. Uncoated, Cold-Rolled Steel Sheet: ASTM A 1008/A 1008M, either commercial steel, Type B, or structural steel, Grade 25 (Grade 170), unless another grade is required by design loads; exposed.

2.4 FASTENERS

A. General: Provide zinc-plated fasteners with coating complying with ASTM B 633, Class Fe/Zn 25 for exterior use, and Class Fe/Zn 5 where built into exterior walls. Select fasteners for type, grade, and class required.

B. Bolts and Nuts: Regular hexagon-head bolts, ASTM A 307, Grade A (ASTM F 568M, Property Class 4.6); with hex nuts, ASTM A 563 (ASTM A 563M); and, where indicated, flat washers.

C. Anchor Bolts: ASTM F 1554, Grade 36.

D. Machine Screws: ASME B18.6.3 (ASME B18.6.7M).

E. Lag Bolts: ASME B18.2.1 (ASME B18.2.3.8M).

F. Plain Washers: Round, ASME B18.22.1 (ASME B18.22M).

G. Lock Washers: Helical, spring type, ASME B18.21.1 (ASME B18.21.2M).

H. Expansion Anchors: Anchor bolt and sleeve assembly with capability to sustain, without failure, a load equal to six times the load imposed when installed in unit masonry and four times the load imposed when installed in concrete, as determined by testing according to ASTM E 488, conducted by a qualified independent testing agency.

1. Material for Anchors in Interior Locations: Carbon-steel components zinc-plated to comply with ASTM B 633, Class Fe/Zn 5.

2.5 MISCELLANEOUS MATERIALS

A. Welding Rods and Bare Electrodes: Select according to AWS specifications for metal alloy welded.

B. Shop Primers: Provide primers that comply with Division 09 Section "High-Performance Coatings."

C. Universal Shop Primer: Fast-curing, lead- and chromate-free, universal modified-alkyd primer complying with MPI#79.

1. Use primer with a VOC content of 420 g/L (3.5 lb/gal.) or less when calculated according to 40 CFR 59, Subpart D (EPA Method 24).

D. Bituminous Paint: Cold-applied asphalt emulsion complying with ASTM D 1187.

E. Concrete Materials and Properties: Comply with requirements in Section 033000 "Cast-in-Place Concrete" for normal-weight, air-entrained, ready-mix concrete with a minimum 28-day compressive strength of 3000 psi (20 MPa), unless otherwise indicated.

F. Nonslip-Aggregate Concrete Finish: Factory-packaged abrasive aggregate made from fused, aluminum-oxide grits or crushed emery; rustproof and nonglazing; unaffected by freezing, moisture, or cleaning materials.

G. Welded Wire Fabric: ASTM A 185, 6 by 6 inches (152 by 152 mm)--W1.4 by W1.4, unless otherwise indicated.

2.6 FABRICATION, GENERAL

A. Provide complete stair assemblies, including metal framing, hangers, struts, railings, clips, brackets, bearing plates, and other components necessary to support and anchor stairs and platforms on supporting structure.

1. Join components by welding, unless otherwise indicated.

2. Use connections that maintain structural value of joined pieces.

B. Preassembled Stairs: Assemble stairs in shop to greatest extent possible. Disassemble units only as necessary for shipping and handling limitations. Clearly mark units for reassembly and coordinated installation.

C. Cut, drill, and punch metals cleanly and accurately. Remove burrs and ease edges to a radius of approximately 1/32 inch (1 mm), unless otherwise indicated. Remove sharp or rough areas on exposed surfaces.

D. Form bent-metal corners to smallest radius possible without causing grain separation or otherwise impairing work.

E. Form exposed work true to line and level with accurate angles and surfaces and straight edges.

F. Weld connections to comply with the following:

1. Use materials and methods that minimize distortion and develop strength and corrosion resistance of base metals.
2. Obtain fusion without undercut or overlap.
3. Remove welding flux immediately.
4. Weld exposed corners and seams continuously, unless otherwise indicated.
5. At exposed connections, finish exposed welds and surfaces smooth and blended so no roughness shows after finishing and contour of welded surface matches that of adjacent surface.

G. Form exposed connections with hairline joints, flush and smooth, using concealed fasteners where possible. Where exposed fasteners are required, use Phillips flat-head (countersunk) screws or bolts unless otherwise indicated. Locate joints where least conspicuous.

2.7 STEEL-FRAMED STAIRS

A. Manufacturers:

1. Alfab, Inc.
2. American Stair, Inc.
3. Sharon Companies Ltd. (The).

B. Stair Framing:

1. Fabricate stringers of steel plates or channels.

   a. Provide closures for exposed ends of channel stringers.

2. Construct platforms of steel plate or channel headers and miscellaneous framing members as needed to comply with performance requirements.
3. Weld stringers to headers; weld framing members to stringers and headers.
4. Where stairs are enclosed by gypsum board assemblies, provide hanger rods or struts to support landings from floor construction above or below. Locate hanger rods and struts where they will not encroach on required stair width and will be within the fire-resistance-rated stair enclosure.
5. Where masonry walls support metal stairs, provide temporary supporting struts designed for erecting steel stair components before installing masonry.

C. Metal-Pan Stairs: Form risers, subtread pans, and subplatforms to configurations shown from steel sheet of thickness needed to comply with performance requirements but not less than 0.0677 inch (1.7 mm).

1. Steel Sheet: Uncoated cold-rolled steel sheet, unless otherwise indicated.
2. Directly weld metal pans to stringers; locate welds on top of subtreads where they will be concealed by concrete fill. Do not weld risers to stringers.
3. Shape metal pans to include nosing integral with riser.
4. Attach abrasive nosings to risers.
5. At Contractor's option, provide stair assemblies with metal-pan subtreads filled with reinforced concrete during fabrication.
6. Provide epoxy-resin-filled treads, reinforced with glass fibers, with slip-resistant, abrasive surface.
7. Provide subplatforms of configuration indicated or, if not indicated, the same as subtreads. Weld subplatforms to platform framing.

    a. Smooth Soffit Construction: Construct subplatforms with smooth soffits.

2.8 FINISHES

A. Comply with NAAMM's "Metal Finishes Manual for Architectural and Metal Products" for recommendations for applying and designating finishes.

B. Finish metal stairs after assembly.

C. Preparation for Shop Priming: Prepare uncoated ferrous-metal surfaces to comply with minimum requirements indicated below for SSPC surface preparation specifications and environmental exposure conditions of installed products:

1. Interior Stairs (SSPC Zone 1A): SSPC-SP 3, "Power Tool Cleaning."
2. Interior Stairs (SSPC Zone 1A): SSPC-SP 6/NACE No. 3, "Commercial Blast Cleaning."

D. Apply shop primer to uncoated surfaces of metal stair components, except those with galvanized finishes and those to be embedded in concrete or masonry unless otherwise indicated. Comply with SSPC-PA 1, "Paint Application Specification No. 1: Shop, Field, and Maintenance Painting of Steel," for shop painting.

1. Stripe paint corners, crevices, bolts, welds, and sharp edges.

PART 3 - EXECUTION

3.1 INSTALLATION, GENERAL

A. Fastening to In-Place Construction: Provide anchorage devices and fasteners where necessary for securing metal stairs to in-place construction. Include threaded fasteners for concrete and masonry inserts, through-bolts, lag bolts, and other connectors.

B. Cutting, Fitting, and Placement: Perform cutting, drilling, and fitting required for installing metal stairs. Set units accurately in location, alignment, and elevation, measured from established lines and levels and free of rack.

C. Install metal stairs by welding stair framing to steel structure or to weld plates cast into concrete, unless otherwise indicated.

D. Provide temporary bracing or anchors in formwork for items that are to be built into concrete, masonry, or similar construction.

E. Fit exposed connections accurately together to form hairline joints. Weld connections that are not to be left as exposed joints but cannot be shop welded because of shipping size limitations. Do not weld, cut, or abrade surfaces of exterior units that have been hot-dip galvanized after fabrication and are for bolted or screwed field connections.

F. Field Welding: Comply with the following requirements:

1. Use materials and methods that minimize distortion and develop strength and corrosion resistance of base metals.
2. Obtain fusion without undercut or overlap.
3. Remove welding flux immediately.
4. At exposed connections, finish exposed welds and surfaces smooth and blended so no roughness shows after finishing and contour of welded surface matches that of adjacent surface.

G. Place and finish concrete fill for treads and platforms to comply with Section 033000 "Cast-in-Place Concrete."

1. Install abrasive nosings with anchors fully embedded in concrete. Center nosings on tread width.

H. Install precast concrete treads with adhesive supplied by manufacturer.

3.2 INSTALLING STEEL TUBE RAILINGS

A. Adjust railing systems before anchoring to ensure matching alignment at abutting joints. Space posts at spacing indicated or, if not indicated, as required by design loads. Plumb posts in each direction. Secure posts and rail ends to building construction as follows:

1. Anchor posts to steel by welding directly to steel supporting members.
2. Anchor handrail ends to concrete and masonry with steel round flanges welded to rail ends and anchored with postinstalled anchors and bolts.

B. Attach handrails to wall with wall brackets. Provide bracket with 1-1/2-inch (38-mm) clearance from inside face of handrail and finished wall surface. Locate brackets as indicated or, if not indicated, at spacing required to support structural loads. Secure wall brackets to building construction as follows:

1. Use type of bracket with flange tapped for concealed anchorage to threaded hanger bolt.
2. Use type of bracket with predrilled hole for exposed bolt anchorage.
3. For concrete and solid masonry anchorage, use drilled-in expansion shields and hanger or lag bolts.

3.3 ADJUSTING AND CLEANING

A. Touchup High Performance Coating: Immediately after erection, clean field welds, bolted connections, and abraded areas of shop paint, and paint exposed areas with the same material as used for shop painting to comply with SSPC-PA 1 for touching up shop-painted surfaces.

1. Apply by brush or spray to provide a minimum 2.0-mil (0.05-mm) dry film thickness.

B. Touchup High Performance Coating: Cleaning and touchup of field welds, bolted connections, and abraded areas of shop paint are specified in Division 09 High Performance Coating Section.

END OF SECTION 055113

SECTION 055113 - METAL LADDERS

PART 1 - GENERAL

1.1 RELATED DOCUMENTS

A. Drawings and general provisions of the Contract, including General and Supplementary Conditions and Division 01 Specification Sections, apply to this Section.

1.2 SUMMARY

A. Section Includes:

1. Metal ladders.
2. Alternating tread devices.
3. Metal ships' ladders and crossovers.
4. Metal floor plate and supports.
5. Metal catwalks, ramps, and platforms.

B. Related Requirements:

1. Section 055000 "Metal Fabrications."

1.3 DEFINITIONS

A. “Metal Ladders” refers to work of this Section in general and to ladders fabricated from metal.

1.4 COORDINATION

A. Coordinate selection of shop primers with topcoats to be applied over them. Comply with paint and coating manufacturers' written recommendations to ensure that shop primers and topcoats are compatible with one another.

B. Coordinate installation of metal ladders that are anchored to other work. Furnish setting drawings, templates, and directions for installing anchorages, including sleeves, anchor bolts, and items with integral anchors, that are to be embedded in concrete or masonry. Deliver such items to Project site in time for installation.

1.5 ACTION SUBMITTALS

A. Product Data: For the following:

1. Nonslip aggregates and nonslip-aggregate surface finishes.
2. Paint products.
3. Grout.

B. Shop Drawings: Show fabrication and installation details. Include plans, elevations, sections, and details of metal ladders and their connections. Show anchorage and accessory items. Provide Shop Drawings for the following:

1. Metal ladders.
2. Alternating tread devices.
3. Metal ships' ladders and crossovers.
4. Metal floor plate and supports.

C. Delegated-Design Submittal: Including analysis data signed and sealed by the qualified professional engineer responsible for their preparation.

1.6 INFORMATIONAL SUBMITTALS

A. Qualification Data: For professional engineer.

B. Welding certificates.

C. Paint Compatibility Certificates: From manufacturers of topcoats applied over shop primers, certifying that shop primers are compatible with topcoats.

D. Research/Evaluation Reports: For post-installed anchors, from ICC-ES.

1.7 QUALITY ASSURANCE

A. Welding Qualifications: Qualify procedures and personnel according to AWS D1.1/D1.1M, "Structural Welding Code - Steel."

B. Welding Qualifications: Qualify procedures and personnel according to the following:

1. AWS D1.1/D1.1M, "Structural Welding Code - Steel."
2. AWS D1.2/D1.2M, "Structural Welding Code - Aluminum."
3. AWS D1.6/D1.6M, "Structural Welding Code - Stainless Steel."

1.8 FIELD CONDITIONS

A. Field Measurements: Verify actual locations of walls and other construction contiguous with metal ladders by field measurements before fabrication.

PART 2 - PRODUCTS

2.1 PERFORMANCE REQUIREMENTS

A. Delegated Design: Engage a qualified professional engineer, as defined in Section 014000 "Quality Requirements," to design ladders, alternating tread devices, ships' ladders, pipe crossovers, floor plate and supports, catwalks, ramps, and platforms.

B. Structural Performance of Aluminum Ladders: Aluminum ladders, including landings, shall withstand the effects of loads and stresses within limits and under conditions specified in ANSI A14.3.

C. Structural Performance of Alternating Tread Devices: Alternating tread devices shall withstand the effects of gravity loads and the following loads and stresses within limits and under conditions indicated.

1. Uniform Load: 100 lbf/sq. ft. (4.79 kN/sq. m).
2. Concentrated Load: 300 lbf (1.33 kN) applied on an area of 4 sq. in. (2580 sq. mm).
3. Uniform and concentrated loads need not be assumed to act concurrently.
4. Alternating Tread Device Framing: Capable of withstanding stresses resulting from railing loads in addition to loads specified above.

2.2 METALS

A. Metal Surfaces, General: Provide materials with smooth, flat surfaces unless otherwise indicated. For metal ladders exposed to view in the completed Work, provide materials without seam marks, roller marks, rolled trade names, or blemishes.

B. Steel Plates, Shapes, and Bars: ASTM A 36/A 36M.

C. Rolled-Steel Floor Plate: ASTM A 786/A 786M, rolled from plate complying with ASTM A 36/A 36M or ASTM A 283/A 283M, Grade C or D.

D. Steel Tubing: ASTM A 500/A 500M, cold-formed steel tubing.

E. Steel Pipe: ASTM A 53/A 53M, Standard Weight (Schedule 40) unless otherwise indicated.

F. Aluminum Plate and Sheet: ASTM B 209 (ASTM B 209M), Alloy 6061-T6.

G. Aluminum Extrusions: ASTM B 221 (ASTM B 221M), Alloy 6063-T6.

H. Aluminum-Alloy Rolled Tread Plate: ASTM B 632/B 632M, Alloy 6061-T6.

I. Aluminum Castings: ASTM B 26/B 26M, Alloy 443.0-F.

2.3 FASTENERS

A. General: Unless otherwise indicated, provide Type 304 stainless-steel fasteners for exterior use and zinc-plated fasteners with coating complying with ASTM B 633 or ASTM F 1941 (ASTM F 1941M), Class Fe/Zn 5, at exterior walls. Select fasteners for type, grade, and class required.

1. Provide stainless-steel fasteners for fastening aluminum.
2. Provide stainless-steel fasteners for fastening stainless steel.

B. Steel Bolts and Nuts: Regular hexagon-head bolts, ASTM A 307, Grade A (ASTM F 568M, Property Class 4.6); with hex nuts, ASTM A 563 (ASTM A 563M); and, where indicated, flat washers.

C. Stainless-Steel Bolts and Nuts: Regular hexagon-head annealed stainless-steel bolts, ASTM F 593 (ASTM F 738M); with hex nuts, ASTM F 594 (ASTM F 836M); and, where indicated, flat washers; Alloy Group 1 (A1).

D. Anchor Bolts: ASTM F 1554, Grade 36, of dimensions indicated; with nuts, ASTM A 563 (ASTM A 563M); and, where indicated, flat washers.

1. Hot-dip galvanize or provide mechanically deposited, zinc coating where item being fastened is indicated to be galvanized.

E. Anchors, General: Anchors capable of sustaining, without failure, a load equal to six times the load imposed when installed in unit masonry and four times the load imposed when installed in concrete, as determined by testing according to ASTM E 488/E 488M, conducted by a qualified independent testing agency.

F. Post-Installed Anchors: Chemical anchors.

1. Material for Interior Locations: Carbon-steel components zinc plated to comply with ASTM B 633 or ASTM F 1941 (ASTM F 1941M), Class Fe/Zn 5, unless otherwise indicated.
2. Material for Exterior Locations and Where Stainless Steel Is Indicated: Alloy Group 1 (A1) stainless-steel bolts, ASTM F 593 (ASTM F 738M), and nuts, ASTM F 594 (ASTM F 836M).

2.4 MISCELLANEOUS MATERIALS

A. Universal Shop Primer: Fast-curing, lead- and chromate-free, universal modified-alkyd primer complying with MPI#79 and compatible with topcoat.

1. Use primer containing pigments that make it easily distinguishable from zinc-rich primer.

B. Epoxy Zinc-Rich Primer: Complying with MPI#20 and compatible with topcoat.

C. Bituminous Paint: Cold-applied asphalt emulsion complying with ASTM D 1187/D 1187M.

D. Nonshrink, Nonmetallic Grout: Factory-packaged, nonstaining, noncorrosive, nongaseous grout complying with ASTM C 1107/C 1107M. Provide grout specifically recommended by manufacturer for interior and exterior applications.

2.5 FABRICATION, GENERAL

A. Shop Assembly: Preassemble items in the shop to greatest extent possible. Disassemble units only as necessary for shipping and handling limitations. Use connections that maintain structural value of joined pieces. Clearly mark units for reassembly and coordinated installation.

B. Cut, drill, and punch metals cleanly and accurately. Remove burrs and ease edges to a radius of approximately 1/32 inch (1 mm) unless otherwise indicated. Remove sharp or rough areas on exposed surfaces.

C. Form bent-metal corners to smallest radius possible without causing grain separation or otherwise impairing work.

D. Form exposed work with accurate angles and surfaces and straight edges.

E. Weld corners and seams continuously to comply with the following:

1. Use materials and methods that minimize distortion and develop strength and corrosion resistance of base metals.
2. Obtain fusion without undercut or overlap.
3. Remove welding flux immediately.
4. At exposed connections, finish exposed welds and surfaces smooth and blended so no roughness shows after finishing.

F. Form exposed connections with hairline joints, flush and smooth, using concealed fasteners or welds where possible. Where exposed fasteners are required, use Phillips flat-head (countersunk) fasteners unless otherwise indicated. Locate joints where least conspicuous.

G. Fabricate seams and other connections that are exposed to weather in a manner to exclude water. Provide weep holes where water may accumulate.

H. Cut, reinforce, drill, and tap metal ladders as indicated to receive finish hardware, screws, and similar items.

I. Provide for anchorage of type indicated; coordinate with supporting structure. Space anchoring devices to secure metal ladders rigidly in place and to support indicated loads.

2.6 METAL LADDERS

A. General:

1. Comply with ANSI A14.3.
2. Comply with OSHA 1910.27.
3. For elevator pit ladders, comply with ASME A17.1/CSA B44.

B. Steel Ladders:

1. Space siderails 16 inches (406 mm) apart unless otherwise indicated.
2. Siderails: Continuous, 1/2-by-2-1/2-inch (12.7-by-64-mm) steel flat bars, with eased edges.
3. Rungs: 1-inch- (25-mm-) diameter steel bars.
4. Fit rungs in centerline of siderails; plug-weld and grind smooth on outer rail faces.
5. Provide nonslip surfaces on top of each rung, either by coating rung with aluminum-oxide granules set in epoxy-resin adhesive or by using a type of manufactured rung filled with aluminum-oxide grout.
6. Provide platforms as indicated fabricated from welded or pressure-locked steel bar grating, supported by steel angles. Limit openings in gratings to no more than 1/2 inch (12 mm) in least dimension.
7. Support each ladder at top and bottom and not more than 60 inches (1500 mm) o.c. with welded or bolted steel brackets.
8. Prime ladders, including brackets and fasteners, with zinc-rich primer.

C. Aluminum Ladders:

1. Basis-of-Design Product: Subject to compliance with requirements, provide Precision Ladders, LLC; Model FL or a comparable product by one of the following:

   a. Fixfast USA.
   b. O'Keeffe's Inc.
   c. Thompson Fabricating, LLC.

2. Space siderails 16 inches (406 mm) apart unless otherwise indicated.
3. Siderails: Continuous extruded-aluminum channels or tubes, not less than 2-1/2 inches (64 mm) deep, 3/4 inch (19 mm) wide, and 1/8 inch (3.2 mm) thick.
4. Rungs: Extruded-aluminum tubes, not less than 3/4 inch (19 mm) deep and not less than 1/8 inch (3.2 mm) thick, with ribbed tread surfaces.
5. Fit rungs in centerline of siderails; fasten by welding or with stainless-steel fasteners or brackets and aluminum rivets.

6. Provide platforms as indicated fabricated from pressure-locked aluminum bar grating or extruded-aluminum plank grating, supported by extruded-aluminum framing. Limit openings in gratings to no more than 1/2 inch (12 mm) in least dimension.
7. Support each ladder at top and bottom and not more than 60 inches (1500 mm) o.c. with welded or bolted aluminum brackets.
8. Provide minimum 72-inch- (1830-mm-) high, hinged security door with padlock hasp at foot of ladder to prevent unauthorized ladder use.

2.7 ALTERNATING TREAD DEVICES

A. Alternating Tread Devices: Fabricate alternating tread devices of open-type construction with channel or plate stringers and pipe and tube railings unless otherwise indicated. Provide brackets and fittings for installation.

1. Manufacturers: Subject to compliance with requirements, provide products by one of the following:

   a. Duvinage LLC.
   b. Lapeyre Stair Inc.
   c. Precision Ladders, LLC.

2. Tread depth shall be not less than 5 inches (127 mm) exclusive of nosing or less than 8-1/2 inches (216 mm) including the nosing, tread width shall be not less than 7 inches (178 mm), and riser height shall be not more than 9-1/2 inches (241 mm).
3. Tread depth shall be not less than 8-1/2 inches (216 mm) exclusive of nosing or less than 10-1/2 inches (267 mm) including the nosing, tread width shall be not less than 7 inches (178 mm), and riser height shall be not more than 8 inches (203 mm).
4. Fabricate from steel or aluminum and assemble by welding or with stainless-steel fasteners.
5. Comply with applicable railing requirements in Section 055213 "Pipe and Tube Railings."

B. Factory finish steel alternating tread devices, including treads, railings, brackets, and fasteners, with manufacturer’s standard powder-coat finish.

2.8 METAL SHIPS' LADDERS AND PIPE CROSSOVERS

A. Provide metal ships' ladders and crossovers where indicated. Fabricate of open-type construction with channel or plate stringers and pipe and tube railings unless otherwise indicated. Provide brackets and fittings for installation.

1. Treads shall be not less than 5 inches (127 mm) exclusive of nosing or less than 8-1/2 inches (216 mm) including the nosing, and riser height shall be not more than 9-1/2 inches (241 mm).
2. Fabricate ships' ladders and crossovers, including railings from steel or aluminum.
3. Fabricate treads and platforms from welded or pressure-locked steel bar grating, pressure-locked aluminum bar grating, or extruded-aluminum plank grating. Limit openings in gratings to no more than 1/2 inch (12 mm) in least dimension.
4. Fabricate treads and platforms from rolled-steel floor plate or rolled-aluminum-alloy tread plate.
5. Comply with applicable railing requirements in Section 055213 "Pipe and Tube Railings."

B. Prime steel ships' ladders and crossovers, including treads, railings, brackets, and fasteners, with zinc-rich primer.

2.9 METAL FLOOR PLATE

A. Fabricate from rolled-steel floor or rolled-aluminum-alloy tread plate of thickness indicated below:

1. Thickness: 1/4 inch (6.4 mm), but not less than as required to comply with delegated design.

B. Provide grating sections where indicated fabricated from welded or pressure-locked steel bar grating, pressure-locked aluminum bar grating, or extruded-aluminum plank grating. Limit openings in gratings to no more than 1/2 inch (12 mm) in least dimension.

C. Provide steel or aluminum angle supports as indicated.

2.10 FINISHES, GENERAL

A. Finish metal ladders after assembly.

B. Finish exposed surfaces to remove tool and die marks and stretch lines, and to blend into surrounding surface.

2.11 STEEL AND IRON FINISHES

A. Shop prime iron and steel items unless they are to be embedded in concrete, sprayed-on fireproofing, or masonry, or unless otherwise indicated.

1. Shop prime with universal shop primer unless indicated.

B. Preparation for Shop Priming: Prepare surfaces to comply with SSPC-SP 6/NACE No. 3, "Commercial Blast Cleaning."

C. Shop Priming: Apply shop primer to comply with SSPC-PA 1, "Paint Application Specification No. 1: Shop, Field, and Maintenance Painting of Steel," for shop painting.

1. Stripe paint corners, crevices, bolts, welds, and sharp edges.

2.12 ALUMINUM FINISHES

A. As-Fabricated Finish: AA-M12.

PART 3 - EXECUTION

3.1 INSTALLATION, GENERAL

A. Cutting, Fitting, and Placement: Perform cutting, drilling, and fitting required for installing metal ladders. Set metal ladders accurately in location, alignment, and elevation; with edges and surfaces level, plumb, true, and free of rack; and measured from established lines and levels.

B. Fit exposed connections accurately together to form hairline joints. Weld connections that are not to be left as exposed joints but cannot be shop welded because of shipping size limitations. Do not weld, cut, or abrade surfaces of exterior units that have been hot-dip galvanized after fabrication and are for bolted or screwed field connections.

C. Field Welding: Comply with the following requirements:

1. Use materials and methods that minimize distortion and develop strength and corrosion resistance of base metals.
2. Obtain fusion without undercut or overlap.
3. Remove welding flux immediately.
4. At exposed connections, finish exposed welds and surfaces smooth and blended so no roughness shows after finishing and contour of welded surface matches that of adjacent surface.

D. Fastening to In-Place Construction: Provide anchorage devices and fasteners where metal ladders are required to be fastened to in-place construction. Provide threaded fasteners for use with concrete and masonry inserts, toggle bolts, through bolts, lag screws, wood screws, and other connectors.

E. Provide temporary bracing or anchors in formwork for items that are to be built into concrete, masonry, or similar construction.

F. Corrosion Protection: Coat concealed surfaces of aluminum that come into contact with grout, concrete, masonry, wood, or dissimilar metals with the following:

1. Cast Aluminum: Heavy coat of bituminous paint.
2. Extruded Aluminum: Two coats of clear lacquer.

3.2 INSTALLING METAL LADDERS

A. General: Install framing and supports to comply with requirements of items being supported, including manufacturers' written instructions and requirements indicated on Shop Drawings.

B. Anchor supports securely to, and rigidly brace from, building structure.

3.3 ADJUSTING AND CLEANING

A. Touchup Painting: Immediately after erection, clean field welds, bolted connections, and abraded areas. Paint uncoated and abraded areas with the same material as used for shop painting to comply with SSPC-PA 1 for touching up shop-painted surfaces.

1. Apply by brush or spray to provide a minimum 2.0-mil (0.05-mm) dry film thickness.
2. Touchup factory finishes in accordance with manufacturer’s written instructions.

END OF SECTION 055113

SECTION 055213 - PIPE AND TUBE RAILINGS

PART 1 - GENERAL

1.1 RELATED DOCUMENTS

A. Drawings and general provisions of the Contract, including General and Supplementary Conditions and Division 01 Specification Sections, apply to this Section.

1.2 SUMMARY

A. This Section includes the following:

1. Steel pipe railings.

B. Related Sections include the following:

1. Section 055113 "Metal Pan Stairs" for steel tube railings and guardrail infill associated with metal stairs.
2. Section 061053 "Miscellaneous Rough Carpentry" for wood blocking for anchoring railings.

1.3 PERFORMANCE REQUIREMENTS

A. General: In engineering railings to withstand structural loads indicated, determine allowable design working stresses of railing materials based on the following:

B. Structural Performance: Provide railings capable of withstanding the effects of gravity loads and the following loads and stresses within limits and under conditions indicated:

1. Handrails:

a. Uniform load of 50 lbf/ ft. (0.73 kN/m) applied in any direction.
b. Concentrated load of 200 lbf (0.89 kN) applied in any direction.
c. Uniform and concentrated loads need not be assumed to act concurrently.

2. Top Rails of Guards:

a. Uniform load of 50 lbf/ ft. (0.73 kN/m) applied in any direction.
b. Concentrated load of 200 lbf (0.89 kN) applied in any direction.
c. Uniform and concentrated loads need not be assumed to act concurrently.

3. Infill of Guards:

a. Concentrated load of 200 lbf (0.89 kN) applied horizontally on an area of 1 sq. ft. (0.093 sq. m).
b. Uniform load of 25 lbf/sq. ft. (1.2 kN/sq. m) applied horizontally.
c. Infill load and other loads need not be assumed to act concurrently.

C. Thermal Movements: Provide exterior railings that allow for thermal movements resulting from the following maximum change (range) in ambient and surface temperatures by preventing buckling, opening

of joints, overstressing of components, failure of connections, and other detrimental effects. Base engineering calculation on surface temperatures of materials due to both solar heat gain and nighttime-sky heat loss.

1. Temperature Change (Range): 120 deg F (67 deg C), ambient; 180 deg F (100 deg C), material surfaces.

D. Control of Corrosion: Prevent galvanic action and other forms of corrosion by insulating metals and other materials from direct contact with incompatible materials.

1.4 SUBMITTALS

A. Product Data: For the following:

1. Grout, anchoring cement, and paint products.

B. Shop Drawings: Include plans, elevations, sections, details, and attachments to other work.

1. For installed products indicated to comply with design loads, include structural analysis data signed and sealed by the qualified professional engineer responsible for their preparation.

1.5 QUALITY ASSURANCE

A. Source Limitations: Obtain each type of railing through one source from a single manufacturer.

B. Welding: Qualify procedures and personnel according to the following:

1. AWS D1.1, "Structural Welding Code--Steel."
2. AWS D1.3, "Structural Welding Code--Sheet Steel."

1.6 PROJECT CONDITIONS

A. Field Measurements: Verify actual locations of walls and other construction contiguous with railings by field measurements before fabrication and indicate measurements on Shop Drawings.

1. Established Dimensions: Where field measurements cannot be made without delaying the Work, establish dimensions and proceed with fabricating railings without field measurements. Coordinate wall and other contiguous construction to ensure that actual dimensions correspond to established dimensions.
2. Provide allowance for trimming and fitting at site.

1.7 COORDINATION AND SCHEDULING

A. Coordinate installation of anchorages for railings. Furnish setting drawings, templates, and directions for installing anchorages, including sleeves, concrete inserts, anchor bolts, and items with integral anchors, that are to be embedded in concrete or masonry. Deliver such items to Project site in time for installation.

B. Schedule installation so wall attachments are made only to completed walls. Do not support railings temporarily by any means that do not satisfy structural performance requirements.

PART 2 - PRODUCTS

2.1 MANUFACTURERS

A. Steel Pipe and Tube Railings:

1. Manufacturers: Subject to compliance with requirements, available manufacturers offering products that may be incorporated into the Work include, but are not limited to, the following:

a. Blum, Julius & Co., Inc.
b. Wagner, R & B, Inc.

2.2 METALS, GENERAL

A. Metal Surfaces, General: Provide materials with smooth surfaces, without seam marks, roller marks, rolled trade names, stains, discolorations, or blemishes.

B. Brackets, Flanges, and Anchors: Cast or formed metal of same type of material and finish as supported rails, unless otherwise indicated.

2.3 STEEL

A. Tubing: ASTM A 500 (cold formed) or ASTM A 513.

B. Pipe: ASTM A 53/A 53M, Type F or Type S, Grade A, Standard Weight (Schedule 40), unless another grade and weight are required by structural loads.

1. Provide galvanized finish for exterior installations and where indicated.

C. Plates, Shapes, and Bars: ASTM A 36/A 36M.

D. Perforated Metal: Cold-rolled steel sheet, ASTM A 1008A/1008M, or hot-rolled sheet steel, ASTM A1011A/1011M, commercial steel type B, 0.060 inch (1.52 mm) minimum thickness, or as required by delegated design, with slotted holes 1/8 inch by 1 inch, 43% openness.

2.4 FASTENERS

A. General: Provide the following:

1. Ungalvanized-Steel Railings: Plated steel fasteners complying with ASTM B 633 or ASTM F 1941 (ASTM F 1941M), Class Fe/Zn 5 for zinc coating.
2. Hot-Dip Galvanized Railings: Type 304 stainless-steel or hot-dip zinc-coated steel fasteners complying with ASTM A 153/A 153M or ASTM F 2329 for zinc coating.

B. Fasteners for Anchoring Railings to Other Construction: Select fasteners of type, grade, and class required to produce connections suitable for anchoring railings to other types of construction indicated and capable of withstanding design loads.

C. Fasteners for Interconnecting Railing Components:

1. Provide concealed fasteners for interconnecting railing components and for attaching them to other work, unless otherwise indicated.
2. Provide concealed fasteners for interconnecting railing components and for attaching them to other work, unless exposed fasteners are unavoidable or are the standard fastening method for railings indicated.
3. Provide tamper-resistant flat-head machine screws for exposed fasteners, unless otherwise indicated.

D. Anchors: Provide cast-in-place or torque-controlled expansion anchors, fabricated from corrosion-resistant materials with capability to sustain, without failure, a load equal to six times the load imposed when installed in unit masonry and equal to four times the load imposed when installed in concrete, as determined by testing per ASTM E 488 conducted by a qualified independent testing agency.

2.5 MISCELLANEOUS MATERIALS

A. Welding Rods and Bare Electrodes: Select according to AWS specifications for metal alloy welded.

B. Bituminous Paint: Cold-applied asphalt emulsion complying with ASTM D 1187.

C. Nonshrink, Nonmetallic Grout: Factory-packaged, nonstaining, noncorrosive, nongaseous grout complying with ASTM C 1107. Provide grout specifically recommended by manufacturer for interior and exterior applications.

D. Anchoring Cement: Factory-packaged, nonshrink, nonstaining, hydraulic-controlled expansion cement formulation for mixing with water at Project site to create pourable anchoring, patching, and grouting compound.

1. Water-Resistant Product: At exterior locations provide formulation that is resistant to erosion from water exposure without needing protection by a sealer or waterproof coating and that is recommended by manufacturer for exterior use.

2.6 FABRICATION

A. General: Fabricate railings to comply with requirements indicated for design, dimensions, member sizes and spacing, details, finish, and anchorage, but not less than that required to support structural loads.

B. Assemble railings in the shop to greatest extent possible to minimize field splicing and assembly. Disassemble units only as necessary for shipping and handling limitations. Clearly mark units for reassembly and coordinated installation. Use connections that maintain structural value of joined pieces.

C. Cut, drill, and punch metals cleanly and accurately. Remove burrs and ease edges to a radius of approximately 1/32 inch (1 mm), unless otherwise indicated. Remove sharp or rough areas on exposed surfaces.

D. Form work true to line and level with accurate angles and surfaces.

E. Fabricate connections that will be exposed to weather in a manner to exclude water. Provide weep holes where water may accumulate.

F. Cut, reinforce, drill, and tap as indicated to receive finish hardware, screws, and similar items.

G. Connections: Fabricate railings with welded connections, unless otherwise indicated.

H. Welded Connections: Cope components at connections to provide close fit, or use fittings designed for this purpose. Weld all around at connections, including at fittings.

1. Use materials and methods that minimize distortion and develop strength and corrosion resistance of base metals.
2. Obtain fusion without undercut or overlap.
3. Remove flux immediately.
4. At exposed connections, finish exposed surfaces smooth and blended so no roughness shows after finishing and welded surface matches contours of adjoining surfaces.

I. Form changes in direction as follows:

1. By bending or by inserting prefabricated elbow fittings.

J. Form simple and compound curves by bending members in jigs to produce uniform curvature for each repetitive configuration required; maintain cross section of member throughout entire bend without buckling, twisting, cracking, or otherwise deforming exposed surfaces of components.

K. Close exposed ends of railing members with prefabricated end fittings.

L. Provide wall returns at ends of wall-mounted handrails, unless otherwise indicated. Close ends of returns unless clearance between end of rail and wall is 1/4 inch (6 mm) or less.

M. Brackets, Flanges, Fittings, and Anchors: Provide wall brackets, flanges, miscellaneous fittings, and anchors to interconnect railing members to other work, unless otherwise indicated.

1. Basis-of-Design: Julius Blum & Co., Inc.; #221 self-aligning wall bracket.

N. Provide inserts and other anchorage devices for connecting railings to concrete or masonry work. Fabricate anchorage devices capable of withstanding loads imposed by railings. Coordinate anchorage devices with supporting structure.

O. Steel Panel Infill Panels: Fabricate infill panels from perforated and unperforated steel sheet set into metal channel frames, in thickness as required to comply with performance requirements. Make panels and frames from same metal as railings in which they are installed.

P. Perforated Infill Panels: Fabricate infill panels from perforated metal sheets crimped into 1-by-1/2-by-1/8-inch (25-by-13-by-3-mm) metal channel frames, and welded as required by delegated design. Make perforated metal and frames from same metal as railings in which they are installed.

1. Orient perforations parallel to adjacent stringer and floor level.

Q. Toe Boards: Where indicated, provide toe boards at railings around openings and at edge of open-sided floors and platforms. Fabricate to dimensions and details indicated.

2.7 FINISHES, GENERAL

A. Comply with NAAMM's "Metal Finishes Manual for Architectural and Metal Products" for recommendations for applying and designating finishes.

B. Provide exposed fasteners with finish matching appearance, including color and texture, of railings.

2.8 STEEL FINISHES

A. For nongalvanized-steel railings, provide nongalvanized ferrous-metal fittings, brackets, fasteners, and sleeves; however, galvanize anchors to be embedded in exterior concrete or masonry.

B. Preparation for Shop Priming: Prepare uncoated ferrous-metal surfaces to comply with requirements indicated below:

1. Railings Indicated to Receive Primers Specified in Section 099600 "High-Performance Coatings": SSPC-SP 6/NACE No. 3, "Commercial Blast Cleaning."
2. Other Railings: SSPC-SP 3, "Power Tool Cleaning."

PART 3 - EXECUTION

3.1 INSTALLATION, GENERAL

A. Fit exposed connections together to form tight, hairline joints.

B. Perform cutting, drilling, and fitting required for installing railings. Set railings accurately in location, alignment, and elevation; measured from established lines and levels and free of rack.

1. Do not weld, cut, or abrade surfaces of railing components that have been coated or finished after fabrication and that are intended for field connection by mechanical or other means without further cutting or fitting.
2. Set posts plumb within a tolerance of 1/16 inch in 3 feet (2 mm in 1 m).
3. Align rails so variations from level for horizontal members and variations from parallel with rake of steps and ramps for sloping members do not exceed 1/4 inch in 12 feet (5 mm in 3 m).

C. Adjust railings before anchoring to ensure matching alignment at abutting joints.

D. Fastening to In-Place Construction: Use anchorage devices and fasteners where necessary for securing railings and for properly transferring loads to in-place construction.

3.2 RAILING CONNECTIONS

A. Welded Connections: Use fully welded joints for permanently connecting railing components. Comply with requirements for welded connections in Part 2 "Fabrication" Article whether welding is performed in the shop or in the field.

B. Expansion Joints: Install expansion joints at locations indicated but not farther apart than required to accommodate thermal movement. Provide slip-joint internal sleeve extending 2 inches (50 mm) beyond joint on either side, fasten internal sleeve securely to 1 side, and locate joint within 6 inches (150 mm) of post.

3.3 ANCHORING POSTS

A. Form or core-drill holes not less than 5 inches (125 mm) deep and 3/4 inch (20 mm) larger than OD of post for installing posts in concrete. Clean holes of loose material, insert posts, and fill annular space between post and concrete with nonshrink, nonmetallic grout or anchoring cement, mixed and placed to comply with anchoring material manufacturer's written instructions.

B. Cover anchorage joint with flange of same metal as post, welded to post after placing anchoring material.

C. Leave anchorage joint exposed; wipe off surplus anchoring material; and leave 1/8-inch (3-mm) buildup, sloped away from post.

3.4 ANCHORING RAILING ENDS

A. Anchor railing ends to concrete and masonry with round flanges connected to railing ends and anchored to wall construction with anchors and bolts.

3.5 ATTACHING HANDRAILS TO WALLS

A. Attach handrails to wall with wall brackets. Provide brackets with 1-1/2-inch (38-mm) clearance from inside face of handrail and finished wall surface.

1. Use type of bracket with flange tapped for concealed anchorage to threaded hanger bolt.
2. Use type of bracket with predrilled hole for exposed bolt anchorage.

B. Locate brackets as indicated or, if not indicated, at spacing required to support structural loads.

C. Secure wall brackets to building construction as follows:

1. For concrete and solid masonry anchorage, use drilled-in expansion shields and hanger or lag bolts.

3.6 ADJUSTING AND CLEANING

A. Clean stainless steel by washing thoroughly with clean water and soap and rinsing with clean water.

B. Touchup Painting: Immediately after erection, clean field welds, bolted connections, and abraded areas of shop paint, and paint exposed areas with same material as used for shop painting to comply with SSPC-PA 1 for touching up shop-painted surfaces.

C. Touchup Painting: Cleaning and touchup painting of field welds, bolted connections, and abraded areas of shop paint are specified in Division 09 painting Sections.

3.7 PROTECTION

A. Protect finishes of railings from damage during construction period with temporary protective coverings approved by railing manufacturer. Remove protective coverings at time of Substantial Completion.

B. Restore finishes damaged during installation and construction period so no evidence remains of correction work. Return items that cannot be refinished in the field to the shop; make required alterations and refinish entire unit, or provide new units.

END OF SECTION 055213

SECTION 057000 - DECORATIVE METAL

PART 1 - GENERAL

1.1 RELATED DOCUMENTS

A. Drawings and general provisions of the Contract, including General and Supplementary Conditions and Division 01 Specification Sections, apply to this Section.

1.2 SUMMARY

A. Section Includes:

1. Decorative metal interior and exterior signs.

B. Related Requirements:

1. Document 002600 “Procurement Substitution Procedures.”

1.3 COORDINATION

A. Coordinate installation of anchorages for decorative metal items. Furnish setting drawings, templates, and directions for installing anchorages, including sleeves, concrete inserts, anchor bolts, and items with integral anchors, that are to be embedded in concrete or masonry. Deliver such items to Project site in time for installation.

1.4 ACTION SUBMITTALS

A. Product Data: For each type of product, including finishing materials.

B. Shop Drawings: Show fabrication and installation details for decorative metal.

1. Include plans, elevations, component details, and attachment details.
2. Indicate materials and profiles of each decorative metal member, fittings, joinery, finishes, fasteners, anchorages, and accessory items.

C. Delegated Design: Signed and sealed by qualified professional engineer, for exterior signs including anchorages and attachments.

D. Samples for Initial Selection: For products involving selection of color, texture, or design including mechanical finishes.

E. Samples for Verification: For each type of exposed finish.

1. Sections of linear shapes.
2. Samples of welded joints showing quality of workmanship and color matching of materials.

1.5 INFORMATIONAL SUBMITTALS

A. Qualification Data: For fabricator.

B. Welding certificates.

1.6 QUALITY ASSURANCE

A. Fabricator Qualifications: A firm experienced in producing decorative metal similar to that indicated for this Project and with a record of successful in-service performance, as well as sufficient production capacity to produce required units.

B. Installer Qualifications: Fabricator of products.

C. Organic-Coating Applicator Qualifications: A firm experienced in successfully applying organic coatings, of type indicated, to aluminum extrusions and employing competent control personnel to conduct continuing, effective quality-control program to ensure compliance with requirements.

D. Anodic Finisher Qualifications: A firm experienced in successfully applying anodic finishes of type indicated and employing competent control personnel to conduct continuing, effective quality-control program to ensure compliance with requirements.

E. Welding Qualifications: Qualify procedures and personnel according to the following:

1. AWS D1.2/D1.2M, "Structural Welding Code - Aluminum."
2. AWS D1.6/D1.6M, "Structural Welding Code - Stainless Steel."

1.7 DELIVERY, STORAGE, AND HANDLING

A. Store decorative metal in a well-ventilated area, away from uncured concrete and masonry, and protected from weather, moisture, soiling, abrasion, extreme temperatures, and humidity.

B. Deliver and store cast-metal products in wooden crates surrounded by enough packing material to ensure that products are not cracked or otherwise damaged.

1.8 FIELD CONDITIONS

A. Field Measurements: Verify actual locations of walls and other construction contiguous with decorative metal by field measurements before fabrication and indicate measurements on Shop Drawings.

PART 2 - PRODUCTS

2.1 DECORATIVE METAL FABRICATORS

A. Subject to compliance with requirements, provide products by one of the following:

1. ShieldCo, 1209 N. East Street, Suite D, Frederick, Maryland, 240.394.9893.

B. Substitutions: Requests for substitutions shall be made in writing at least ten days prior to the date of the Bid Opening and must meet the requirements set forth in Instructions to Bidders.

2.2 METALS, GENERAL

A. Metal Surfaces, General: Use materials with smooth, flat surfaces unless otherwise indicated. Use materials without seam marks, roller marks, rolled trade names, stains, discolorations, or blemishes.

2.3 ALUMINUM

A. Fabricate products from alloy and temper recommended by aluminum producer and finisher for type of use and finish indicated, and with strength and durability properties for each aluminum form required not less than that of alloy and temper designated below.

B. Bars and Shapes: ASTM B 221 (ASTM B 221M), Alloy 6063-T5/T52.

C. Pipe and Round Tubing: ASTM B 429/B 429M, Alloy 6063-T6.

D. Tubing: ASTM B 210 (ASTM B 210M), Alloy 6063-T832.

E. Plate and Sheet: ASTM B 209 (ASTM B 209M)

1. Interior: Alloy 6061-T6 minimum.
2. Exterior: Alloy 5052-H32 minimum.

F. Forgings: ASTM B 247 (ASTM B 247M), Alloy 6061-T6.

G. Castings: ASTM B 26/B 26M, Alloy A356.0-T6.

2.4 STAINLESS STEEL

A. Tubing: ASTM A 554, Grade MT 304.

B. Pipe: ASTM A 312/A 312M, Grade TP 304.

C. Castings: ASTM A 743/A 743M, Grade CF 8 or Grade CF 20.

D. Sheet, Strip, Plate, and Flat Bar: ASTM A 666, Type 304.

E. Bars and Shapes: ASTM A 276, Type 304.

2.5 FASTENERS

A. Fastener Materials: Unless otherwise indicated, provide the following:

1. Type 304 stainless-steel fasteners.

B. Fasteners for Anchoring to Other Construction: Unless otherwise indicated, select fasteners of type, grade, and class required to produce connections suitable for anchoring indicated items to other types of construction indicated.

C. Provide concealed fasteners for interconnecting components and for attaching decorative metal items to other work unless otherwise indicated.

1. Provide tamper-resistant flat-head machine screws for exposed fasteners unless otherwise indicated.

D. Post-Installed Anchors: Fastener systems with an evaluation report acceptable to authorities having jurisdiction, based on ICC-ES AC193 or ICC-ES AC308.

1. Material for Interior Locations: Carbon-steel components zinc plated to comply with ASTM B 633 or ASTM F 1941 (ASTM F 1941M), Class Fe/Zn 5 unless otherwise indicated.
2. Material for Exterior Locations and Where Stainless Steel Is Indicated: Alloy Group 1 (A1) stainless-steel bolts, ASTM F 593 (ASTM F 738M), and nuts, ASTM F 594 (ASTM F 836M).

2.6 MISCELLANEOUS MATERIALS

A. Welding Rods and Bare Electrodes: Select according to AWS specifications for metal alloy welded.

1. For aluminum, provide type and alloy as recommended by producer of metal to be welded and as required for color match, strength, and compatibility in fabricated items.

B. Galvanizing Repair Paint: High-zinc-dust-content paint complying with SSPC-Paint 20 and compatible with paints specified to be used over it.

C. Bituminous Paint: Cold-applied asphalt emulsion complying with ASTM D 1187/D 1187M.

2.7 FABRICATION, GENERAL

A. Assemble items in the shop to greatest extent possible to minimize field splicing and assembly. Disassemble units only as necessary for shipping and handling limitations. Clearly mark units for reassembly and coordinated installation. Use connections that maintain structural value of joined pieces.

B. Form decorative metal to required shapes and sizes, true to line and level with true curves and accurate angles and surfaces. Finish exposed surfaces to smooth, sharp, well-defined lines and arris.

C. Form bent-metal corners to smallest radius possible without causing grain separation or otherwise impairing the Work.

D. Form simple and compound curves in bars, pipe, tubing, and extruded shapes by bending members in jigs to produce uniform curvature for each configuration required; maintain cross section of member throughout entire bend without buckling, twisting, cracking, or otherwise deforming exposed surfaces.

E. Cut, drill, and punch metals cleanly and accurately. Remove burrs and ease edges to a radius of approximately 1/32 inch (1 mm) unless otherwise indicated. Remove sharp or rough areas on exposed surfaces.

F. Mill joints to a tight, hairline fit. Cope or miter corner joints. Fabricate connections that will be exposed to weather in a manner to exclude water.

G. Provide weep holes where water may accumulate. Locate weep holes in inconspicuous locations.

H. Provide necessary rebates, lugs, and brackets to assemble units and to attach to other work. Cut, reinforce, drill, and tap as needed to receive finish hardware, screws, and similar items unless otherwise indicated.

I. Comply with AWS for recommended practices in shop welding. Weld behind finished surfaces without distorting or discoloring exposed side. Clean exposed welded joints of flux, and dress exposed and contact surfaces.

1. Where welding cannot be concealed behind finished surfaces, finish joints to comply with NOMMA's "Voluntary Joint Finish Standards" for Type 1 Welds: no evidence of a welded joint.

J. Provide castings that are sound and free of warp, cracks, blowholes, or other defects that impair strength or appearance. Grind, wire brush, sandblast, and buff castings to remove seams, gate marks, casting flash, and other casting marks.

2.8 DECORATIVE METAL EXTERIOR SIGNS

A. Fabricate decorative metal exterior signs from aluminum sheet or plate of thickness, size, and pattern indicated. Form pattern by punching, cutting, or drilling to produce design indicated. Roll, press, and grind metal to flatten and to remove burrs and deformations.

1. Logo design will be provided in DWG format upon Contractor request.
2. Form decorative metal exterior sign frame from rectangular aluminum shapes.
3. Provide secondary supports within sign frame to support logo as indicated, and as required to withstand loads indicated on Structural Drawings.

B. Welding: Interconnect members with full-length, full-penetration welds unless otherwise indicated. Use welding method that is appropriate for metal and finish indicated and that develops full strength of members joined. Finish exposed welds and surfaces smooth, flush, and blended to match adjoining surfaces.

C. Brackets, Fittings, and Anchors: Provide brackets, fittings, and anchors to connect decorative metal exterior signs to other work.

1. Furnish inserts and other anchorage devices to connect decorative metal exterior signs to concrete and masonry work. Coordinate anchorage devices with supporting structure.
2. Fabricate anchorage devices that are capable of withstanding loads indicated on Structural Drawings.

D. Finish: High-performance organic finish.

2.9 DECORATIVE METAL INTERIOR SIGNS

A. Fabricate decorative metal interior signs from aluminum sheet or plate of thickness, size, and pattern indicated. Form pattern by punching, cutting, or drilling to produce design indicated. Roll, press, and grind metal to flatten and to remove burrs and deformations.

1. Logo design will be provided in DWG format upon Contractor request.

B. Weld mounting studs to back of sign in positions to allow mounting in mortar joints.

C. Finish: Clear anodized.

2.10 FINISHES, GENERAL

A. Comply with NAAMM's "Metal Finishes Manual for Architectural and Metal Products" for recommendations for applying and designating finishes.

B. Protect mechanical finishes on exposed surfaces from damage by applying a strippable, temporary protective covering before shipping.

2.11 ALUMINUM FINISHES

A. Finish designations prefixed by AA comply with the system established by the Aluminum Association for designating aluminum finishes.

B. Clear Anodic Finish: AAMA 611, AA-M12C22A31, Class II, 0.010 mm or thicker.

C. High-Performance Organic Finish: Two-coat fluoropolymer finish complying with AAMA 2605 and containing not less than 70 percent PVDF resin by weight in color coat. Prepare, pretreat, and apply coating to exposed metal surfaces to comply with coating and resin manufacturers' written instructions.

1. Color and Gloss: Custom color to match “Caesar Rodney Blue”, semigloss.

PART 3 - EXECUTION

3.1 EXAMINATION

A. Examine substrates and conditions, with Installer present, for compliance with requirements for installation tolerances and other conditions affecting performance of decorative metal.

B. Proceed with installation only after unsatisfactory conditions have been corrected.

3.2 INSTALLATION, GENERAL

A. Provide anchorage devices and fasteners where needed to secure decorative metal to in-place construction.

B. Perform cutting, drilling, and fitting required to install decorative metal. Set products accurately in location, alignment, and elevation, measured from established lines and levels. Provide temporary bracing or anchors in formwork for items to be built into concrete, masonry, or similar construction.

C. Fit exposed connections accurately together to form tight, hairline joints or, where indicated, uniform reveals and spaces for sealants and joint fillers. Where cutting, welding, and grinding are required for proper shop fitting and jointing of decorative metal, restore finishes to eliminate evidence of such corrective work.

D. Do not cut or abrade finishes that cannot be completely restored in the field. Return items with such finishes to the shop for required alterations, followed by complete refinishing, or provide new units as required.

E. Install concealed gaskets, joint fillers, insulation, and flashings as work progresses.

F. Restore protective coverings that have been damaged during shipment or installation. Remove protective coverings only when there is no possibility of damage from other work yet to be performed at same location.

1. Retain protective coverings intact; remove coverings simultaneously from similarly finished items to preclude nonuniform oxidation and discoloration.

G. Field Welding: Comply with applicable AWS specification for procedures of manual shielded metal arc welding and requirements for welding and for finishing welded connections in "Fabrication, General" Article. Weld connections that are not to be left as exposed joints but cannot be shop welded because of shipping size limitations.

H. Control of Corrosion: Prevent galvanic action and other forms of corrosion by insulating metals and other materials from direct contact with incompatible materials.

1. Coat concealed surfaces of aluminum that will be in contact with grout, concrete, masonry, wood, or dissimilar metals, with a heavy coat of bituminous paint.

3.3 INSTALLING DECORATIVE METAL EXTERIOR SIGNS

A. Fasten decorative metal exterior sign support frame to concrete and masonry walls with cast-in-place or post-installed posts set in non-shrink grout.

3.4 INSTALLING DECORATIVE METAL INTERIOR SIGNS

A. Mount decorative metal interior signs at heights and in positions indicated, adjusting position to mount studs in mortar joints as necessary.

3.5 CLEANING AND PROTECTION

A. Unless otherwise indicated, clean metals by washing thoroughly with clean water and soap, rinsing with clean water, and drying with soft cloths.

B. Protect finishes of decorative metal from damage during construction period with temporary protective coverings approved by decorative metal fabricator. Remove protective covering at time of Substantial Completion.

C. Restore finishes damaged during installation and construction period so no evidence remains of correction work. Return items that cannot be refinished in the field to the shop; make required alterations and refinish entire unit, or provide new units.

END OF SECTION 057000

SECTION 061053 - MISCELLANEOUS ROUGH CARPENTRY

PART 1 - GENERAL

1.1 RELATED DOCUMENTS

A. Drawings and general provisions of the Contract, including General and Supplementary Conditions and Division 01 Specification Sections, apply to this Section.

1.2 SUMMARY

A. Section Includes:

1. Wood blocking and nailers.
2. Plywood backing panels.

B. Related Requirements:

1. Section 061600 "Sheathing" for sheathing.

1.3 DEFINITIONS

A. Boards or Strips: Lumber of less than 2 inches nominal (38 mm actual) size in least dimension.

B. Dimension Lumber: Lumber of 2 inches nominal (38 mm actual) or greater size but less than 5 inches nominal (114 mm actual) size in least dimension.

1.4 ACTION SUBMITTALS

A. Product Data: For each type of process and factory-fabricated product. Indicate component materials and dimensions and include construction and application details.

1. Include data for wood-preservative treatment from chemical treatment manufacturer and certification by treating plant that treated materials comply with requirements. Indicate type of preservative used and net amount of preservative retained.
2. Include data for fire-retardant treatment from chemical treatment manufacturer and certification by treating plant that treated materials comply with requirements. Include physical properties of treated materials based on testing by a qualified independent testing agency.
3. For fire-retardant treatments, include physical properties of treated lumber both before and after exposure to elevated temperatures, based on testing by a qualified independent testing agency according to ASTM D 5664.
4. For products receiving a waterborne treatment, include statement that moisture content of treated materials was reduced to levels specified before shipment to Project site.

1.5 INFORMATIONAL SUBMITTALS

A. Evaluation Reports: For the following, from ICC-ES:

1. Preservative-treated wood.
2. Fire-retardant-treated wood.
3. Power-driven fasteners.
4. Post-installed anchors.
5. Metal framing anchors.

1.6 QUALITY ASSURANCE

A. Testing Agency Qualifications: For testing agency providing classification marking for fire-retardant-treated material, an inspection agency acceptable to authorities having jurisdiction that periodically performs inspections to verify that the material bearing the classification marking is representative of the material tested.

1.7 DELIVERY, STORAGE, AND HANDLING

A. Stack lumber flat with spacers beneath and between each bundle to provide air circulation. Protect lumber from weather by covering with waterproof sheeting, securely anchored. Provide for air circulation around stacks and under coverings.

PART 2 - PRODUCTS

2.1 WOOD PRODUCTS, GENERAL

A. Lumber: DOC PS 20 and applicable rules of grading agencies indicated. If no grading agency is indicated, provide lumber that complies with the applicable rules of any rules-writing agency certified by the ALSC Board of Review. Provide lumber graded by an agency certified by the ALSC Board of Review to inspect and grade lumber under the rules indicated.

1. Factory mark each piece of lumber with grade stamp of grading agency.
2. For exposed lumber indicated to receive a stained or natural finish, mark grade stamp on end or back of each piece.
3. Dress lumber, S4S, unless otherwise indicated.

B. Maximum Moisture Content of Lumber: 19 percent unless otherwise indicated.

2.2 WOOD-PRESERVATIVE-TREATED MATERIALS

A. Preservative Treatment by Pressure Process: AWPA U1; Use Category UC2 for interior construction not in contact with ground, Use Category UC3b for exterior construction not in contact with ground, and Use Category UC4a for items in contact with ground.

1. Preservative Chemicals: Acceptable to authorities having jurisdiction and containing no arsenic or chromium. Do not use inorganic boron (SBX) for sill plates.
2. For exposed items indicated to receive a stained or natural finish, chemical formulations shall not require incising, contain colorants, bleed through, or otherwise adversely affect finishes.

B. Kiln-dry lumber after treatment to a maximum moisture content of 19 percent. Do not use material that is warped or does not comply with requirements for untreated material.

C. Mark lumber with treatment quality mark of an inspection agency approved by the ALSC Board of Review.

1. For exposed lumber indicated to receive a stained or natural finish, mark end or back of each piece.

D. Application: Treat items indicated on Drawings, and the following:

1. Wood cants, nailers, curbs, equipment support bases, blocking, stripping, and similar members in connection with roofing, flashing, vapor barriers, and waterproofing.
2. Wood sills, sleepers, blocking, furring, stripping, and similar concealed members in contact with masonry or concrete.
3. Wood framing and furring attached directly to the interior of below-grade exterior masonry or concrete walls.

2.3 FIRE-RETARDANT-TREATED MATERIALS

A. General: Where fire-retardant-treated materials are indicated, materials shall comply with requirements in this article, that are acceptable to authorities having jurisdiction, and with fire-test-response characteristics specified as determined by testing identical products per test method indicated by a qualified testing agency.

B. Fire-Retardant-Treated Lumber and Plywood by Pressure Process: Products with a flame-spread index of 25 or less when tested according to ASTM E 84, and with no evidence of significant progressive combustion when the test is extended an additional 20 minutes, and with the flame front not extending more than 10.5 feet (3.2 m) beyond the centerline of the burners at any time during the test.

1. Treatment shall not promote corrosion of metal fasteners.
2. Exterior Type: Treated materials shall comply with requirements specified above for fire-retardant-treated lumber and plywood by pressure process after being subjected to accelerated weathering according to ASTM D 2898. Use for exterior locations and where indicated.
3. Interior Type A: Treated materials shall have a moisture content of 28 percent or less when tested according to ASTM D 3201 at 92 percent relative humidity. Use where exterior type is not indicated.
4. Design Value Adjustment Factors: Treated lumber shall be tested according to ASTM D 5664, and design value adjustment factors shall be calculated according to ASTM D 6841.

C. Kiln-dry lumber after treatment to a maximum moisture content of 19 percent. Kiln-dry plywood after treatment to a maximum moisture content of 15 percent.

D. Identify fire-retardant-treated wood with appropriate classification marking of qualified testing agency.

E. Application: Treat items indicated on Drawings, and the following:

1. Concealed blocking.
2. Roof blocking.
3. Wood cants, nailers, curbs, equipment support bases, blocking, and similar members in connection with roofing.
4. Plywood backing panels.

2.4 MISCELLANEOUS LUMBER

A. General: Provide miscellaneous lumber indicated and lumber for support or attachment of other construction, including the following:

1. Blocking.
2. Nailers.
3. Rooftop equipment bases and support curbs.
4. Cants.
5. Furring.
6. Grounds.
7. Utility shelving.

B. Dimension Lumber Items: Standard, Stud, or No. 3 grade lumber of any species.

C. Concealed Boards: 19 percent maximum moisture content of any of the following species and grades:

1. Mixed southern pine or southern pine, No. 3 grade; SPIB.
2. Eastern softwoods, No. 3 Common grade; NELMA.
3. Northern species, No. 3 Common grade; NLGA.
4. Western woods, Standard or No. 3 Common grade; WCLIB or WWPA.

D. For blocking not used for attachment of other construction, Utility, Stud, or No. 3 grade lumber of any species may be used provided that it is cut and selected to eliminate defects that will interfere with its attachment and purpose.

E. For blocking and nailers used for attachment of other construction, select and cut lumber to eliminate knots and other defects that will interfere with attachment of other work.

F. For furring strips for installing plywood or hardboard paneling, select boards with no knots capable of producing bent-over nails and damage to paneling.

2.5 PLYWOOD BACKING PANELS

A. Equipment Backing Panels: Plywood, DOC PS 1, Exposure 1, C-D Plugged, fire-retardant treated, in thickness indicated or, if not indicated, not less than 3/4-inch (19-mm) nominal thickness.

2.6 FASTENERS

A. General: Provide fasteners of size and type indicated that comply with requirements specified in this article for material and manufacture.

1. Where carpentry is exposed to weather, in ground contact, pressure-preservative treated, or in area of high relative humidity, provide fasteners with hot-dip zinc coating complying with ASTM A 153/A 153M.

B. Nails, Brads, and Staples: ASTM F 1667.

C. Screws for Fastening to Metal Framing: For fastening to non-load-bearing framing: ASTM C 1002, and for fastening to cold-formed metal framing ASTM C 954, length as recommended by screw manufacturer for material being fastened.

D. Power-Driven Fasteners: Fastener systems with an evaluation report acceptable to authorities having jurisdiction, based on ICC-ES AC70.

E. Post-Installed Anchors: Fastener systems with an evaluation report acceptable to authorities having jurisdiction, based on ICC-ES AC01, ICC-ES AC58, ICC-ES AC193, or ICC-ES AC308 as appropriate for the substrate.

1. Material: Carbon-steel components, zinc plated to comply with ASTM B 633, Class Fe/Zn 5.
2. Material: Stainless steel with bolts and nuts complying with ASTM F 593 and ASTM F 594, Alloy Group 1 or 2 (ASTM F 738M and ASTM F 836M, Grade A1 or A4).

2.7 MISCELLANEOUS MATERIALS

A. Adhesives for Gluing Furring to Concrete or Masonry: Formulation complying with ASTM D 3498 that is approved for use indicated by adhesive manufacturer.

B. Flexible Flashing: Composite, self-adhesive, flashing product consisting of a pliable, butyl rubber compound, bonded to a high-density polyethylene film, aluminum foil, or spunbonded polyolefin to produce an overall thickness of not less than 0.025 inch (0.6 mm).

PART 3 - EXECUTION

3.1 INSTALLATION, GENERAL

A. Framing Standard: Comply with AF&PA's WCD 1, "Details for Conventional Wood Frame Construction," unless otherwise indicated.

B. Set carpentry to required levels and lines, with members plumb, true to line, cut, and fitted. Fit carpentry accurately to other construction. Locate furring, nailers, blocking, and similar supports to comply with requirements for attaching other construction.

C. Install plywood backing panels by fastening to studs; coordinate locations with utilities requiring backing panels. Install fire-retardant-treated plywood backing panels with classification marking of testing agency exposed to view.

D. Install metal framing anchors to comply with manufacturer's written instructions. Install fasteners through each fastener hole.

E. Do not splice structural members between supports unless otherwise indicated.

F. Provide blocking and framing as indicated and as required to support facing materials, fixtures, specialty items, and trim.

1. Provide metal clips for fastening gypsum board or lath at corners and intersections where framing or blocking does not provide a surface for fastening edges of panels. Space clips not more than 16 inches (406 mm) o.c.

G. Sort and select lumber so that natural characteristics do not interfere with installation or with fastening other materials to lumber. Do not use materials with defects that interfere with function of member or pieces that are too small to use with minimum number of joints or optimum joint arrangement.

H. Comply with AWPA M4 for applying field treatment to cut surfaces of preservative-treated lumber.

1. Use inorganic boron for items that are continuously protected from liquid water.
2. Use copper naphthenate for items not continuously protected from liquid water.

I. Where wood-preservative-treated lumber is installed adjacent to metal decking, install continuous flexible flashing separator between wood and metal decking.

J. Securely attach carpentry work to substrate by anchoring and fastening as indicated, complying with the following:

1. Table 2304.9.1, "Fastening Schedule," in ICC's International Building Code.
2. ICC-ES evaluation report for fastener.

3.2 WOOD BLOCKING AND NAILER INSTALLATION

A. Install where indicated and where required for attaching other work. Form to shapes indicated and cut as required for true line and level of attached work. Coordinate locations with other work involved.

B. Attach items to substrates to support applied loading. Recess bolts and nuts flush with surfaces unless otherwise indicated.

3.3 PROTECTION

A. Protect miscellaneous rough carpentry from weather. If, despite protection, miscellaneous rough carpentry becomes wet, apply EPA-registered borate treatment. Apply borate solution by spraying to comply with EPA-registered label.

END OF SECTION 061053

SECTION 061600 - SHEATHING

PART 1 - GENERAL

1.1 RELATED DOCUMENTS

A. Drawings and general provisions of the Contract, including General and Supplementary Conditions and Division 01 Specification Sections, apply to this Section.

1.2 SUMMARY

A. Section Includes:

1. Wall sheathing.
2. Composite nail base insulated parapet sheathing.

B. Related Requirements:

1. Section 061053 "Miscellaneous Rough Carpentry" for plywood backing panels.
2. Section 072500 "Weather Barriers" for water-resistive barrier applied over wall sheathing.

1.3 ACTION SUBMITTALS

A. Product Data: For each type of process and factory-fabricated product. Indicate component materials and dimensions and include construction and application details.

1. Include data for wood-preservative treatment from chemical treatment manufacturer and certification by treating plant that treated plywood complies with requirements. Indicate type of preservative used and net amount of preservative retained.
2. Include data for fire-retardant treatment from chemical treatment manufacturer and certification by treating plant that treated plywood complies with requirements. Include physical properties of treated materials.
3. For fire-retardant treatments, include physical properties of treated plywood both before and after exposure to elevated temperatures, based on testing by a qualified independent testing agency according to ASTM D 5516.
4. For products receiving waterborne treatment, include statement that moisture content of treated materials was reduced to levels specified before shipment to Project site.

1.4 INFORMATIONAL SUBMITTALS

A. Evaluation Reports: For the following, from ICC-ES:

1. Wood-preservative-treated plywood.
2. Fire-retardant-treated plywood.
3. Foam-plastic sheathing.

1.5 QUALITY ASSURANCE

A. Testing Agency Qualifications: For testing agency providing classification marking for fire-retardant-treated material, an inspection agency acceptable to authorities having jurisdiction that periodically performs inspections to verify that the material bearing the classification marking is representative of the material tested.

1.6 DELIVERY, STORAGE, AND HANDLING

A. Stack panels flat with spacers beneath and between each bundle to provide air circulation. Protect sheathing from weather by covering with waterproof sheeting, securely anchored. Provide for air circulation around stacks and under coverings.

PART 2 - PRODUCTS

2.1 PERFORMANCE REQUIREMENTS

A. Fire-Resistance Ratings: As tested according to ASTM E 119; testing by a qualified testing agency. Identify products with appropriate markings of applicable testing agency.

1. Fire-Resistance Ratings: Indicated by design designations from UL's "Fire Resistance Directory" or from the listings of another qualified testing agency.

2.2 WOOD PANEL PRODUCTS

A. Thickness: As needed to comply with requirements specified, but not less than thickness indicated.

B. Factory mark panels to indicate compliance with applicable standard.

2.3 PRESERVATIVE-TREATED PLYWOOD

A. Preservative Treatment by Pressure Process: AWPA U1; Use Category UC2 for interior construction not in contact with ground, Use Category UC3b for exterior construction not in contact with ground, and Use Category UC4a for items in contact with ground.

1. Preservative Chemicals: Acceptable to authorities having jurisdiction and containing no arsenic or chromium.

B. Mark plywood with appropriate classification marking of an inspection agency acceptable to authorities having jurisdiction.

C. Application: Treat all plywood unless otherwise indicated.

2.4 FIRE-RETARDANT-TREATED PLYWOOD

A. General: Where fire-retardant-treated materials are indicated, use materials complying with requirements in this article that are acceptable to authorities having jurisdiction and with fire-test-response characteristics specified as determined by testing identical products per test method indicated by a qualified testing agency.

B. Fire-Retardant-Treated Plywood by Pressure Process: Products with a flame-spread index of 25 or less when tested according to ASTM E 84, and with no evidence of significant progressive combustion when the test is extended an additional 20 minutes, and with the flame front not extending more than 10.5 feet (3.2 m) beyond the centerline of the burners at any time during the test.

1. Use treatment that does not promote corrosion of metal fasteners.
2. Exterior Type: Treated materials shall comply with requirements specified above for fire-retardant-treated plywood by pressure process after being subjected to accelerated weathering according to ASTM D 2898. Use for exterior locations and where indicated.
3. Design Value Adjustment Factors: Treated lumber plywood shall be tested according to ASTM D 5516 and design value adjustment factors shall be calculated according to ASTM D 6305. Span ratings after treatment shall be not less than span ratings specified. For roof sheathing and where high-temperature fire-retardant treatment is indicated, span ratings for temperatures up to 170 deg F (76 deg C) shall be not less than span ratings specified.

C. Kiln-dry material after treatment to a maximum moisture content of 15 percent. Do not use material that is warped or does not comply with requirements for untreated material.

D. Identify fire-retardant-treated plywood with appropriate classification marking of qualified testing agency.

E. Application: Treat all plywood unless otherwise indicated.

2.5 WALL SHEATHING

A. Glass-Mat Gypsum Sheathing: ASTM C 1177/1177M.

1. Products: Subject to compliance with requirements, provide one of the following:

   a. CertainTeed Corporation; GlasRoc.
   b. Georgia-Pacific Gypsum LLC; Dens-Glass Gold.
   c. National Gypsum Company; Gold Bond eXP Extended Exposure Sheathing.
   d. USG Corporation; Securock.

2. Type and Thickness:

   a. Regular, 1/2 inch (13 mm) thick.
   b. Type X, 5/8 inch (15.9 mm) thick.

2.6 COMPOSITE NAIL BASE INSULATED PARAPET SHEATHING

A. Fire-Retardant-Plywood-Surfaced, Polyisocyanurate-Foam Sheathing: ASTM C 1289, Type V with Exterior, Structural I fire-retardant-treated plywood on one face.

1. Products: Subject to compliance with requirements, provide one of the following:

   a. Atlas Roofing Corporation; ACFOAM Nail Base.
   b. Hunter Panels; Xci Ply.

2. Polyisocyanurate-Foam Thickness: 1-1/2 inches (38 mm).

   a. Minimum R-Value: R-7.5.

3. Fire-Retardant-Plywood Nominal Thickness: 1/2 inch (12.6 mm).
4. Net Thickness: 2.1 inches.

2.7 FASTENERS

A. General: Provide fasteners of size and type indicated that comply with requirements specified in this article for material and manufacture.

1. For wall sheathing, provide fasteners with hot-dip zinc coating complying with ASTM A 153/A 153M or of Type 304 stainless steel.
2. For parapet sheathing, provide corrosion resistant fasteners as recommended in writing by sheathing and wood-treatment manufacturers.

B. Screws for Fastening Gypsum Sheathing to Cold-Formed Metal Framing: Steel drill screws, in length recommended by sheathing manufacturer for thickness of sheathing to be attached.

1. For steel framing less than 0.0329 inch (0.835 mm) thick, use screws that comply with ASTM C 1002.
2. For steel framing from 0.033 to 0.112 inch (0.84 to 2.84 mm) thick, use screws that comply with ASTM C 954.

C. Screws for Fastening Composite Nail Base Insulated Roof Sheathing to Metal Roof Deck: Steel or stainless steel drill screws, in type and length recommended by sheathing manufacturer for thickness of sheathing to be attached, with corrosion resistance. Provide washers or plates if recommended by sheathing manufacturer.

PART 3 - EXECUTION

3.1 INSTALLATION, GENERAL

A. Do not use materials with defects that impair quality of sheathing or pieces that are too small to use with minimum number of joints or optimum joint arrangement. Arrange joints so that pieces do not span between fewer than three support members.

B. Cut panels at penetrations, edges, and other obstructions of work; fit tightly against abutting construction unless otherwise indicated.

C. Securely attach to substrate by fastening as indicated, complying with the following:

1. Table 2304.9.1, "Fastening Schedule," in the ICC's International Building Code.
2. ICC-ES evaluation report for fastener.

D. Coordinate wall and parapet sheathing installation with flashing and joint-sealant installation so these materials are installed in sequence and manner that prevent exterior moisture from passing through completed assembly.

E. Do not bridge building expansion joints; cut and space edges of panels to match spacing of structural support elements.

F. Coordinate sheathing installation with installation of materials installed over sheathing so sheathing is not exposed to precipitation or left exposed at end of the workday when rain is forecast.

3.2 GYPSUM SHEATHING INSTALLATION

A. Comply with GA-253 and with manufacturer's written instructions.

1. Fasten gypsum sheathing to cold-formed metal framing with screws.
2. Install panels with a 3/8-inch (9.5-mm) gap where non-load-bearing construction abuts structural elements.
3. Install panels with a 1/4-inch (6.4-mm) gap where they abut masonry or similar materials that might retain moisture, to prevent wicking.

B. Apply fasteners so heads bear tightly against face of sheathing, but do not cut into facing.

C. Horizontal Installation: Install sheathing with V-grooved edge down and tongue edge up. Interlock tongue with groove to bring long edges in contact with edges of adjacent panels without forcing. Abut ends over centers of studs, and stagger end joints of adjacent panels not less than one stud spacing. Attach at perimeter and within field of panel to each stud.

1. Space fasteners approximately 8 inches (200 mm) o.c. and set back a minimum of 3/8 inch (9.5 mm) from edges and ends of panels.

D. Vertical Installation: Install vertical edges centered over studs. Abut ends and edges with those of adjacent panels. Attach at perimeter and within field of panel to each stud.

1. Space fasteners approximately 8 inches (200 mm) o.c. and set back a minimum of 3/8 inch (9.5 mm) from edges and ends of panels.

3.3 NAILABLE INSULATED SHEATHING INSTALLATION

A. General: Comply with NTA, Inc. engineering evaluation report TRU110910-21, or other document required by sheathing manufacturer.

1. Fasten nailable insulated sheathing to cold-formed metal framing with screws.
2. Install panels with a gap where non-load-bearing construction abuts structural elements.
3. Install panels with a gap where they abut masonry or similar construction that might retain moisture, to prevent wicking.

B. Fill gaps greater than 1/8 inch (3 mm) between insulation boards with expanding spray foam or butter edge of board with approved sealant and strike flush.

END OF SECTION 061600

SECTION 062013 - EXTERIOR FINISH CARPENTRY

PART 1 - GENERAL

1.1 RELATED DOCUMENTS

A. Drawings and general provisions of the Contract, including General and Supplementary Conditions and Division 01 Specification Sections, apply to this Section.

1.2 SUMMARY

A. Section Includes:

1. Exterior cellular PVC and foam plastic trim.

B. Related Requirements:

1. Section 061053 "Miscellaneous Rough Carpentry" for furring, blocking, and other carpentry work not exposed to view.
2. Section 099113 "Exterior Painting" for priming and backpriming of exterior finish carpentry.

1.3 DEFINITIONS

A. MDO: Plywood with a medium-density overlay on the face.

1.4 ACTION SUBMITTALS

A. Product Data: For each type of process and factory-fabricated product. Indicate component materials, dimensions, profiles, textures, and colors and include construction and application details.

1. Include data for wood-preservative treatment from chemical-treatment manufacturer and certification by treating plant that treated materials comply with requirements. Indicate type of preservative used and net amount of preservative retained. Include chemical-treatment manufacturer's written instructions for finishing treated material.
2. Include data for fire-retardant treatment from chemical-treatment manufacturer and certification by treating plant that treated materials comply with requirements.
3. For products receiving a waterborne treatment, include statement that moisture content of treated materials was reduced before shipment to Project site to levels specified.

B. Samples for Initial Selection: For each type of product involving selection of colors, profiles, or textures.

C. Samples for Verification:

1. For cellular PVC trim, with half of exposed surface finished; 50 sq. in. (300 sq. cm).
2. For foam plastic moldings, with half of exposed surface finished; 50 sq. in. (300 sq. cm).

1.5 INFORMATIONAL SUBMITTALS

A. Compliance Certificates:

1. For lumber that is not marked with grade stamp.
2. For preservative-treated wood that is not marked with treatment-quality mark.
3. For fire-retardant-treated wood that is not marked with classification marking of testing and inspecting agency.

B. Evaluation Reports: For the following, from ICC-ES:

1. Wood-preservative-treated wood.
2. Fire-retardant-treated wood.
3. Cellular PVC trim.
4. Foam plastic moldings.

C. Sample Warranties: For manufacturer's warranties.

1.6 QUALITY ASSURANCE

A. Testing Agency Qualifications: For testing agency providing classification marking for fire-retardant-treated material, an inspection agency acceptable to authorities having jurisdiction that periodically performs inspections to verify that the material bearing the classification marking is representative of the material tested.

1.7 DELIVERY, STORAGE, AND HANDLING

A. Stack lumber, plywood, and other panels flat with spacers between each bundle to provide air circulation. Protect materials from weather by covering with waterproof sheeting, securely anchored. Provide for air circulation around stacks and under coverings.

1.8 FIELD CONDITIONS

A. Weather Limitations: Proceed with installation only when existing and forecast weather conditions permit work to be performed and at least one coat of specified finish can be applied without exposure to rain, snow, or dampness.

1. For exterior ornamental wood columns, comply with manufacturer's written instructions and warranty requirements.

B. Do not install finish carpentry materials that are wet, moisture damaged, or mold damaged.

1. Indications that materials are wet or moisture damaged include, but are not limited to, discoloration, sagging, or irregular shape.
2. Indications that materials are mold damaged include, but are not limited to, fuzzy or splotchy surface contamination and discoloration.

1.9 WARRANTY

A. Manufacturer's Warranty for Cellular PVC Trim: Manufacturer agrees to repair or replace trim that fails due to defects in manufacturing within specified warranty period. Failures include, but are not limited to, deterioration, delamination, and excessive swelling from moisture.

1. Warranty Period: 25 years from date of Substantial Completion.

B. Manufacturer's Warranty for Columns: Manufacturer agrees to repair or replace columns that fail in materials or workmanship within specified warranty period.

1. Warranty Period for Columns: Five years from date of Substantial Completion.

PART 2 - PRODUCTS

2.1 MATERIALS, GENERAL

A. Lumber: DOC PS 20 and applicable rules of grading agencies indicated.

B. Factory mark each piece of lumber with grade stamp of inspection agency, indicating grade, species, moisture content at time of surfacing, and mill.

1. For exposed lumber, mark grade stamp on end or back of each piece.

C. Softwood Plywood: DOC PS 1.

D. Hardboard: ANSI A135.4.

2.2 WOOD-PRESERVATIVE-TREATED MATERIALS

A. Water-Repellent Preservative Treatment by Nonpressure Process: AWPA N1; dip, spray, flood, or vacuum-pressure treatment.

1. Preservative Chemicals: 3-iodo-2-propynyl butyl carbamate (IPBC), combined with an insecticide containing chloropyrifos (CPF).
2. Use chemical formulations that do not bleed through or otherwise adversely affect finishes. Do not use colorants in solution to distinguish treated material from untreated material.
3. Application: Items not required to be pressure-preservative treated.

B. Preservative Treatment by Pressure Process: AWPA U1; Use Category UC3a and UC3b.

1. Kiln dry lumber and plywood after treatment to a maximum moisture content of 19 and 18 percent, respectively.
2. Preservative Chemicals: Acceptable to authorities having jurisdiction and containing no arsenic or chromium.
3. For exposed items indicated to receive transparent finish, do not use chemical formulations that contain colorants or that bleed through or otherwise adversely affect finishes.
4. Do not use material that is warped or does not comply with requirements for untreated material.
5. Mark lumber with treatment-quality mark of an inspection agency approved by the American Lumber Standard Committee's Board of Review.

a. For exposed lumber indicated to receive a stained or natural finish, mark end or back of each piece.

6. Mark plywood with appropriate classification marking of an inspection agency acceptable to authorities having jurisdiction.

a. For exposed plywood indicated to receive a stained or natural finish, mark back of each piece.

7. Application: All exterior lumber and plywood.

2.3 FIRE-RETARDANT-TREATED MATERIALS

A. General: For applications indicated, use materials complying with requirements in this article that are acceptable to authorities having jurisdiction and comply with testing requirements; testing will be conducted by a qualified testing agency.

B. Fire-Retardant-Treated Lumber and Plywood by Pressure Process: Products with a flame-spread index of 25 or less when tested according to ASTM E 84, with no evidence of significant progressive combustion when the test is extended an additional 20 minutes, and with the flame front not extending more than 10.5 feet (3.2 m) beyond the centerline of the burners at any time during the test.

1. Exterior Type: Materials shall comply with testing requirements after being subjected to accelerated weathering according to ASTM D 2898.
2. Kiln dry lumber and plywood after treatment to a maximum moisture content of 19 and 15 percent, respectively.

C. For exposed items indicated to receive a stained or natural finish, use chemical formulations that do not contain colorants, and provide materials that do not have marks from spacer sticks on exposed face.

D. Do not use material that does not comply with requirements for untreated material or is warped or discolored.

E. Identify fire-retardant-treated wood with appropriate classification marking of testing and inspecting agency acceptable to authorities having jurisdiction.

1. For exposed lumber indicated to receive a stained or natural finish, mark end or back of each piece.
2. For exposed plywood indicated to receive a stained or natural finish, mark back of each piece.

F. Application: All exterior lumber and plywood.

2.4 EXTERIOR TRIM

A. Cellular PVC Trim: Extruded, expanded PVC with a small-cell microstructure, recommended by manufacturer for exterior use, made from UV- and heat-stabilized rigid material.

1. Manufacturers: Subject to compliance with requirements, provide products by one of the following:

a. CertainTeed Corporation.
b. Versatex Trimboard; a Wolfpac Technologies, Inc. company.

2. Density: Not less than 31 lb/cu. ft. (500 kg/cu. m).
3. Heat Deflection Temperature: Not less than 130 deg F (54 deg C), according to ASTM D 648.
4. Coefficient of Thermal Expansion: Not more than 4.5 x 10(-5) inches/inch x deg F (8.1 x 10(-5) mm/mm x deg C).
5. Water Absorption: Not more than 1 percent, according to ASTM D 570.
6. Flame-Spread Index: 75 or less, according to ASTM E 84.

B. Foam Plastic Moldings: Molded product of shapes indicated, recommended by manufacturer for exterior use, with a tough outer skin on exposed surfaces; factory primed. Exposed surfaces shall not be shaped after molding.

1. Manufacturers: Subject to compliance with requirements, provide products by the following:

   a. Fypon Ltd.

2. Density: Not less than 20 lb/cu. ft. (320 kg/cu. m).
3. Flame-Spread Index: Not more than 75 when tested according to ASTM E 84.
4. Thickness: Not more than 1/2 inch (12.7 mm).
5. Width: Not more than 8 inches (204 mm).
6. Patterns: As indicated by manufacturer's designations.

2.5 MISCELLANEOUS MATERIALS

A. Fasteners for Exterior Finish Carpentry: Provide nails or screws, in sufficient length to penetrate not less than 1-1/2 inches (38 mm) into wood substrate.

1. For face-fastening siding, provide ringed-shank siding nails unless otherwise indicated.
2. For prefinished items, provide matching prefinished aluminum fasteners where face fastening is required.
3. For pressure-preservative-treated wood, provide stainless-steel fasteners.
4. For applications not otherwise indicated, provide stainless-steel fasteners.

B. Adhesive for Cellular PVC Trim: Product recommended by trim manufacturer.

C. Flashing: Comply with requirements in Section 076200 "Sheet Metal Flashing and Trim" for flashing materials installed in exterior finish carpentry.

1. Horizontal Joint Flashing for Panel Siding: Preformed, stainless-steel, Z-shaped flashing.

D. Sealants: Latex, complying with ASTM C 834 Type OP, Grade NF and applicable requirements in Section 079200 "Joint Sealants" and recommended by sealant and substrate manufacturers for intended application.

2.6 FABRICATION

A. Back out or kerf backs of standing and running trim wider than 5 inches (125 mm), except members with ends exposed in finished work.

B. Ease edges of lumber less than 1 inch (25 mm) in nominal thickness to 1/16-inch (1.5-mm) radius and edges of lumber 1 inch (25 mm) or more in nominal thickness to 1/8-inch (3-mm) radius.

PART 3 - EXECUTION

3.1 EXAMINATION

A. Examine substrates, with Installer present, for compliance with requirements for installation tolerances and other conditions affecting performance of the Work.

B. Examine finish carpentry materials before installation. Reject materials that are wet, moisture damaged, and mold damaged.

C. Proceed with installation only after unsatisfactory conditions have been corrected.

3.2 PREPARATION

A. Clean substrates of projections and substances detrimental to application.

B. Prime lumber and moldings to be painted, including both faces and edges, unless factory primed. Cut to required lengths and prime ends. Comply with requirements in Section 099113 "Exterior Painting."

3.3 INSTALLATION, GENERAL

A. Do not use materials that are unsound, warped, improperly treated or finished, inadequately seasoned, or too small to fabricate with proper jointing arrangements.

1. Do not use manufactured units with defective surfaces, sizes, or patterns.

B. Install exterior finish carpentry level, plumb, true, and aligned with adjacent materials. Use concealed shims where necessary for alignment.

1. Scribe and cut exterior finish carpentry to fit adjoining work. Refinish and seal cuts as recommended by manufacturer.
2. Install to tolerance of 1/8 inch in 96 inches (3 mm in 2438 mm) for level and plumb. Install adjoining exterior finish carpentry with 1/32-inch (0.8-mm) maximum offset for flush installation and 1/16-inch (1.5-mm) maximum offset for reveal installation.
3. Install stairs with no more than 3/16-inch (4.7-mm) variation between adjacent treads and risers and with no more than 3/8-inch (9.5-mm) variation between largest and smallest treads and risers within each flight.
4. Coordinate exterior finish carpentry with materials and systems in or adjacent to it. Provide cutouts for mechanical and electrical items that penetrate exterior finish carpentry.

3.4 STANDING AND RUNNING TRIM INSTALLATION

A. Install cellular PVC trim to comply with manufacturer's written instructions.

B. Install trim with minimum number of joints as is practical, using full-length pieces from maximum lengths of lumber available. Do not use pieces less than 24 inches (610 mm) long, except where necessary.

1. Use scarf joints for end-to-end joints.
2. Stagger end joints in adjacent and related members.

C. Fit exterior joints to exclude water. Cope at returns and miter at corners to produce tight-fitting joints, with full-surface contact throughout length of joint. Plane backs of casings to provide uniform thickness across joints, where necessary for alignment.

D. Where face fastening is unavoidable, countersink fasteners, fill surface flush, and sand unless otherwise indicated.

3.5 ADJUSTING

A. Replace exterior finish carpentry that is damaged or does not comply with requirements. Exterior finish carpentry may be repaired or refinished if work complies with requirements and shows no evidence of repair or refinishing. Adjust joinery for uniform appearance.

3.6 CLEANING

A. Clean exterior finish carpentry on exposed and semiexposed surfaces. Touch up factory-applied finishes to restore damaged or soiled areas.

3.7 PROTECTION

A. Protect installed products from damage from weather and other causes during construction.

B. Remove and replace finish carpentry materials that are wet, moisture damaged, and mold damaged.

1. Indications that materials are wet or moisture damaged include, but are not limited to, discoloration, sagging, or irregular shape.
2. Indications that materials are mold damaged include, but are not limited to, fuzzy or splotchy surface contamination and discoloration.

END OF SECTION 062013

SECTION 064023 - INTERIOR ARCHITECTURAL WOODWORK

PART 1 - GENERAL

1.1 RELATED DOCUMENTS

A. Drawings and general provisions of the Contract, including General and Supplementary Conditions and Division 01 Specification Sections, apply to this Section.

1.2 SUMMARY

A. Section Includes:

1. Interior standing and running trim.
2. Wood furring, blocking, shims, and hanging strips for installing interior architectural woodwork items that are not concealed within other construction.
3. Shop priming of interior architectural woodwork.
4. Shop finishing of interior architectural woodwork.

B. Related Requirements:

1. Section 024116 "Structure Demolition" for salvage of wood for use in display case.
2. Section 061053 "Miscellaneous Rough Carpentry" for wood furring, blocking, shims, and hanging strips required for installing interior architectural woodwork that are concealed within other construction before interior architectural woodwork installation.
3. Section 101200 "Display Cases" for display case where salvaged wood will be installed.

1.3 COORDINATION

A. Coordinate sizes and locations of framing, blocking, furring, reinforcements, and other related units of Work specified in other Sections to ensure that interior architectural woodwork can be supported and installed as indicated.

1.4 ACTION SUBMITTALS

A. Product Data: For each type of product.

B. Shop Drawings: For interior architectural woodwork.

1. Include plans, elevations, sections, and attachment details.
2. Show large-scale details.
3. Show locations and sizes of furring, blocking, and hanging strips, including blocking and reinforcement concealed by construction and specified in other Sections.
4. Apply AWI Quality Certification Program label to Shop Drawings.

C. Samples for Initial Selection: For each type of exposed finish.

D. Samples for Verification: For the following:

1. Lumber for Transparent Finish: Not less than 5 inches (125 mm) wide by 24 inches (600 mm) long, for each species and cut, finished on one side and one edge.
2. Veneer Leaves: Representative of and selected from flitches to be used for transparent-finished interior architectural woodwork.
3. Lumber and Panel Products with Shop-Applied Opaque Finish: 5 inches (125 mm) wide by 12 inches (300 mm) long for lumber and 8 by 10 inches (200 by 250 mm) for panels, for each finish system and color.

    a. Finish one-half of exposed surface.

1.5 INFORMATIONAL SUBMITTALS

A. Qualification Data: For Installer fabricator.

B. Product Certificates: For the following:

1. Composite wood and agrifiber products.
2. Adhesives.

1.6 QUALITY ASSURANCE

A. Fabricator Qualifications: Shop that employs skilled workers who custom fabricate products similar to those required for this Project and whose products have a record of successful in-service performance.

1. Shop Certification: AWI's Quality Certification Program (QCP) accredited participant.

B. Installer Qualifications: AWI's Quality Certification Program accredited participant.

C. Alternative Qualifications: In lieu of AWI QCP participation and certificates for work in the Section, Fabricator and/or Installer may request pre-approval. Provide Substitution Request using CSI Form 1.5.C, and include information showing equivalent quality control program, years it has been in place, a list of projects of comparable size, complexity, and quality, and three references. Requests shall be provided 10 days prior to Bid.

1. Pre-Approved Fabricators and Installers:

    a. Bowmar Millwork Corporation, Princess Anne, Maryland.
    b. Cabinetry Unlimited, Selbyville, Delaware.

1.7 DELIVERY, STORAGE, AND HANDLING

A. Do not deliver interior architectural woodwork until painting and similar finish operations that might damage woodwork have been completed in installation areas. Store woodwork in installation areas or in areas where environmental conditions comply with requirements specified in "Field Conditions" Article.

1.8 FIELD CONDITIONS

A. Environmental Limitations: Do not deliver or install interior architectural woodwork until building is enclosed, wet-work is complete, and HVAC system is operating and maintaining temperature and relative humidity at levels planned for building occupants during the remainder of the construction period.

B. Field Measurements: Where interior architectural woodwork is indicated to fit to other construction, verify dimensions of other construction by field measurements before fabrication, and indicate measurements on Shop Drawings. Coordinate fabrication schedule with construction progress to avoid delaying the Work.

1. Locate concealed framing, blocking, and reinforcements that support woodwork by field measurements before being concealed by construction, and indicate measurements on Shop Drawings.

C. Established Dimensions: Where interior architectural woodwork is indicated to fit to other construction, establish dimensions for areas where woodwork is to fit. Provide allowance for trimming at site, and coordinate construction to ensure that actual dimensions correspond to established dimensions.

PART 2 - PRODUCTS

2.1 INTERIOR ARCHITECTURAL WOODWORK, GENERAL

A. Quality Standard: Unless otherwise indicated, comply with the "Architectural Woodwork Standards" for grades of interior architectural woodwork indicated for construction, finishes, installation, and other requirements.

1. Provide inspections of fabrication and installation together with labels and certificates from AWI certification program indicating that woodwork complies with requirements of grades specified.
2. The Contract Documents contain requirements that are more stringent than the referenced quality standard. Comply with requirements of Contract Documents in addition to those of the referenced quality standard.
3. Grade: Custom.

2.2 INTERIOR STANDING AND RUNNING TRIM FOR TRANSPARENT FINISH

A. Wood Species and Cut: Match species and cut indicated for other types of transparent-finished architectural woodwork located in same area of building unless otherwise indicated.

1. Species: Maple.
2. Cut: Quarter cut/quarter sawn.

B. For trim items other than base wider than available lumber, use veneered construction. Do not glue for width.

1. For veneered base, use hardwood lumber core, glued for width.

C. For base wider than available lumber, glue for width. Do not use veneered construction.

D. For rails thicker than available lumber, use veneered construction. Do not glue for thickness.

2.3 INTERIOR STANDING AND RUNNING TRIM FOR OPAQUE FINISH

A. Wood Species: Eastern white pine, sugar pine, or western white pine.

2.4 WOOD MATERIALS

A. Wood Products: Provide materials that comply with requirements of referenced quality standard for each type of interior architectural woodwork and quality grade specified unless otherwise indicated.

1. Do not use plain-sawn softwood lumber with exposed, flat surfaces more than 3 inches (76 mm) wide.
2. Wood Moisture Content: 5 to 10 percent.

B. Composite Wood and Agrifiber Products: Provide materials that comply with requirements of referenced quality standard for each type of interior architectural woodwork and quality grade specified unless otherwise indicated.

1. MDF: ANSI A208.2, Grade 130.
2. Particleboard: ANSI A208.1, Grade M-2.
3. Softwood Plywood: DOC PS 1, medium-density overlay.
4. Veneer-Faced Panel Products (Hardwood Plywood): HPVA HP-1.

2.5 MISCELLANEOUS MATERIALS

A. Furring, Blocking, Shims, and Nailers: Softwood or hardwood lumber, kiln-dried to less than 15 percent moisture content.

B. Provide self-drilling screws for metal-framing supports, as recommended by metal-framing manufacturer.

C. Anchors: Select material, type, size, and finish required for each substrate for secure anchorage. Provide metal expansion sleeves or expansion bolts for post-installed anchors. Use nonferrous-metal or hot-dip galvanized anchors and inserts at inside face of exterior walls and at floors.

D. Installation Adhesive: Product recommended by fabricator for each substrate for secure anchorage.

2.6 FABRICATION

A. Fabricate interior architectural woodwork to dimensions, profiles, and details indicated. Ease edges to radius indicated for the following:

1. Edges of Solid-Wood (Lumber) Members: 1/16 inch (1.5 mm) unless otherwise indicated.
2. Edges of Rails and Similar Members More Than 3/4 Inch (19 mm) Thick: 1/8 inch (3 mm).

B. Complete fabrication, including assembly, to maximum extent possible before shipment to Project site. Disassemble components only as necessary for shipment and installation. Where necessary for fitting at site, provide allowance for scribing, trimming, and fitting.

2.7 SHOP PRIMING

A. Interior Architectural Woodwork for Opaque Finish: Shop prime with one coat of wood primer as specified in Section 099123 "Interior Painting."

B. Interior Architectural Woodwork for Transparent Finish: Shop seal with stain (if required), other required pretreatments, and first coat of finish as specified in Section 099300 "Staining and Transparent Finishing."

C. Preparations for Finishing: Comply with referenced quality standard for sanding, filling countersunk fasteners, sealing concealed surfaces, and similar preparations for finishing interior architectural woodwork, as applicable to each unit of work.

1. Backpriming: Apply one coat of sealer or primer, compatible with finish coats, to concealed surfaces of woodwork. Apply two coats to surfaces installed in contact with concrete or masonry and to end-grain surfaces.

2.8 SHOP FINISHING

A. General: Finish interior architectural woodwork indicated on Drawings at fabrication shop. Defer only final touchup, cleaning, and polishing until after installation.

B. Preparation for Finishing: Comply with referenced quality standard for sanding, filling countersunk fasteners, sealing concealed surfaces, and similar preparations for finishing interior architectural woodwork, as applicable to each unit of work.

1. Backpriming: Apply one coat of sealer or primer, compatible with finish coats, to concealed surfaces of interior architectural woodwork. Apply two coats to end-grain surfaces.

C. Transparent Finish:

1. Finish: System - 12, water-based polyurethane.
2. Wash Coat for Closed-Grain Woods: Apply wash-coat sealer to woodwork made from closed-grain wood before staining and finishing.
3. Staining: Match approved sample for color.
4. Filled Finish for Open-Grain Woods: After staining, apply wash-coat sealer and allow to dry. Apply paste wood filler and wipe off excess. Tint filler to match stained wood.
5. Sheen: Satin, 31-45 gloss units measured on 60-degree gloss meter per ASTM D 523.

D. Opaque Finish:

1. Finish: System – primer, as specified in Section 099123 “Interior Painting”.

PART 3 - EXECUTION

3.1 PREPARATION

A. Before installation, condition interior architectural woodwork to average prevailing humidity conditions in installation areas.

B. Before installing interior architectural woodwork, examine shop-fabricated work for completion and complete work as required, including removal of packing and backpriming.

3.2 INSTALLATION

A. Grade: Install interior architectural woodwork to comply with same grade as item to be installed.

B. Assemble interior architectural woodwork and complete fabrication at Project site to the extent that it was not completed in the shop.

C. Install interior architectural woodwork level, plumb, true in line, and without distortion. Shim as required with concealed shims. Install level and plumb to a tolerance of 1/8 inch in 96 inches (3 mm in 2400 mm).

D. Scribe and cut interior architectural woodwork to fit adjoining work, refinish cut surfaces, and repair damaged finish at cuts.

E. Anchor interior architectural woodwork to anchors or blocking built in or directly attached to substrates. Secure with countersunk, concealed fasteners and blind nailing. Use fine finishing nails for exposed fastening, countersunk and filled flush with interior architectural woodwork.

1. For shop-finished items, use filler matching finish of items being installed.
2. Use finishing screws only where required for removable components.

F. Standing and Running Trim: Install with minimum number of joints possible, using full-length pieces (from maximum length of lumber available) to greatest extent possible. Do not use pieces less than 96 inches (2400 mm) long except where shorter single-length pieces are necessary.

1. Scarf running joints and stagger in adjacent and related members.
2. Fill gaps, if any, between top of base and wall with latex sealant, painted to match wall.
3. Install standing and running trim with no more variation from a straight line than 1/8 inch in 96 inches (3 mm in 2400 mm).

G. Touch up finishing work specified in this Section after installation of interior architectural woodwork. Fill nail holes with matching filler where exposed.

1. Apply specified finish coats, including stains and paste fillers if any, to exposed surfaces where only sealer/prime coats are shop applied.

H. See Section 099123 "Interior Painting" and Section 099300 "Staining and Transparent Finishing" for final finishing of installed interior architectural woodwork not indicated to be shop finished.

3.3 ADJUSTING AND CLEANING

A. Repair damaged and defective interior architectural woodwork, where possible, to eliminate functional and visual defects. Where not possible to repair, replace interior architectural woodwork. Adjust joinery for uniform appearance.

B. Clean interior architectural woodwork on exposed and semiexposed surfaces. Touch up shop-applied finishes to restore damaged or soiled areas.

END OF SECTION 064023

SECTION 068200 – COMPOSITE TRIM

PART 1 - GENERAL

1.1 RELATED DOCUMENTS

A. Drawings and general provisions of the Contract, including General and Supplementary Conditions and Division 01 Specification Sections, apply to this Section.

1.2 SUMMARY

A. Section includes Fiberglass reinforced resin fabrications for architectural trim.

B. Related Sections:

1. Section 061053 “Miscellaneous Rough Carpentry” for framing of openings and blocking.
2. Section 079200 “Joint Sealants.”

1.3 REFERENCE STANDARDS

A. ASTM D638: Test Method for Tensile Properties of Plastic.

B. ASTM D695: Test Method for Compressive Strength of Rigid Plastics.

C. ASTM D790: Test Methods for Properties of Unreinforced and Reinforced Plastics and Electrical Insulating Materials.

D. ASTM E84: Test Method for Surface Burning Characteristics of Building Materials.

1.4 COORDINATION

A. Coordinate installation of anchorages for trim, and supports. Furnish setting drawings, templates, and directions for installing anchorages, including sleeves, concrete inserts, anchor bolts, and items with integral anchors, that are to be embedded in concrete or masonry. Deliver such items to Project site in time for installation.

1.5 ACTION SUBMITTALS

A. Product Data: Manufacturer’s product data and installation and maintenance instructions.

B. Manufacturer’s Instructions: Manufacturer’s instructions and recommendations for product delivery, storage and handling.

C. Shop Drawings: Include plans, sections, details, and attachments to other work. Dimensions, adjacent construction, materials, thicknesses, fabrications details, required clearances, field jointing, tolerances, colors, finishes, methods of support, integration of components and anchorages should be shown.

D. Product Samples: Minimum 12 inch by 12 inch sample of typical product similar in nature to those specified.

1.6 QUALITY ASSURANCE

A. Inspect each molded piece to ensure that it complies with specified requirements, including nominal dimensions.

1.7 MANUFACTURER'S QUALIFICATIONS

A. The fiberglass manufacturer shall be one who is currently in the business of manufacturing and supplying architectural fiberglass components for the building construction industry and who can demonstrate this capability. This manufacturer shall have been manufacturing fiberglass architectural components in the United States for at least 10 years doing work with projects comparable to that specified and shown.

1. Submit a list of minimum ten (10) projects of similar size and complexity.

1.8 FIELD CONDITIONS

A. Field Measurements: Verify actual locations of walls and other construction contiguous with gratings by field measurements before fabrication.

1.9 DELIVERY, STORAGE AND HANDLING

A. Handle, store and transport fiberglass fabrications according to manufacturer's recommendations and in a manner that prevents damage.

B. Protect fabrications from damage by retaining shipping protection in place until installation.

C. Damage Responsibility: Except for damage caused by others, the installer is responsible for chipping, cracking, or other damage to fiberglass fabrications, after delivery to the job site and until installation is completed and inspected and approved by the Owner's representative.

1.10 WARRANTY

A. Warrant fabrications to be free from defects due to materials and workmanship for one year.

PART 2 - PRODUCTS

2.1 MANUFACTURERS

A. Basis of Design Manufacturer:

1. Fibertech by Wilson Composites, LLC, 4110 Old Greenville Hwy, Central, SC (864) 646-3000 www.fibertech.net sales@wilsoncomposites.com
2. Other acceptable manufacturers:

a. Architectural Fiberglass Inc., 8300 Bessemer Ave., Cleveland, OH 44127; (888) 483-1775 www.fiberglass-afi.com.
b. Edon Corporation, 1160 Easton Road, Horsham, PA 19044; (215) 672-8050 www.edon.com.
c. Worthington Millwork, 17842 Ashley Drive, Suite C, Panama City Beach, FL 32413; 888.802.3346 www.worthingtonmillwork.com.

2.2 MATERIAL REQUIREMENTS

A. General: The fiberglass reinforced polyester components shall be designed, fabricated and erected to conform to all applicables codes, and to the architect's design criteria.

B. Materials

1. Glass cloth, matt and "chop" shall be equal to the products of PPG-Owens Corning.
2. Resin: Class A fire retardant resin. ASTM E-84 Class 1 flame spread rating of less than 25 unfilled and smoke density under 450.
3. Gelcoat: High performance NPG ISO product with U-V inhibitors as recommended by manufacturer.

   a. Gel coat thickness: 0.016" minimum to 0.025" maximum.

4. Color: As selected by architect
5. Surface Texture: Smooth as selected by architect.
6. Finish: As selected by architect.

C. Cure and clean components prior to shipment. Identify and coordinate each part with shop drawings for installation in the field.

D. All components to be true to line in shapes indicated, free of warps, twists, waves, or distortion.

2.3 ANCHORS AND FASTENERS

A. The installer will provide anchors, fasteners and other accessories required for proper installation of fabrications as recommended and approved by fiberglass fabrication manufacturer and compatible with substrate and adjacent materials. All fasteners to be stainless steel.

2.4 FABRICATION

A. Shop fabricate sections to greatest extent possible to minimize field splicing and assembly. All exposed surfaces shall be finished with colored gel-coat with UV inhibitor. Final ratio of materials shall be 25% fiber, 75% resin for body of components.

PART 3 - EXECUTION

3.1 INSTALLATION, GENERAL

A. Install fabrications in accordance with manufacturer's instructions and approved shop drawings.

B. Hold a Pre-installation conference to observe field conditions and verify substrates are ready for installation. Report discrepancies between design dimensions and field dimensions, which could adversely affect installation, to the Architect.

1. Do not proceed with installation until discrepancies are corrected, or until installation requirements are modified and approved by the Architect.
2. Beginning of installation means acceptance of existing conditions.

C. Installation contractor to be experienced and have completed at least 2 similar installations within the previous twelve months, and be accepted in writing by the manufacturer.

D. Fastening to In-Place Construction: Provide anchorage devices and fasteners where necessary for securing to in-place construction. Include threaded fasteners for concrete and masonry inserts, through-bolts, lag bolts, and other connectors.

3.2 ALLOWABLE TOLERANCES FOR INSTALLED UNITS

A. Maximum Offset from True Alignment: 1/8 inch in 20 feet.

B. Maximum Variation from True Position: 1/4 inch in 20 feet.

3.3 CLEANING

A. Clean installed fiberglass fabrications using cleaning methods and materials approved by manufacturer.

3.4 PROTECTION OF INSTALLED FABRICATIONS

A. Comply with manufacturer’s recommendations and instructions for protecting installed fabrications during construction activities.

END OF SECTION 068200

SECTION 071113 - BITUMINOUS DAMPPROOFING

PART 1 - GENERAL

1.1 RELATED DOCUMENTS

A. Drawings and general provisions of the Contract, including General and Supplementary Conditions and Division 01 Specification Sections, apply to this Section.

1.2 SUMMARY

A. Section Includes:

1. Cold-applied, emulsified-asphalt dampproofing.

B. Related Requirements:

1. Section 042000 "Unit Masonry" for mortar parge coat on masonry surfaces.

1.3 ACTION SUBMITTALS

A. Product Data: For each type of product.

1.4 FIELD CONDITIONS

A. Weather Limitations: Proceed with application only when existing and forecasted weather conditions permit dampproofing to be performed according to manufacturers' written instructions.

B. Ventilation: Provide adequate ventilation during application of dampproofing in enclosed spaces. Maintain ventilation until dampproofing has cured.

PART 2 - PRODUCTS

2.1 MATERIALS, GENERAL

A. Source Limitations: Obtain primary dampproofing materials and primers from single source from single manufacturer. Provide auxiliary materials recommended in writing by manufacturer of primary materials.

B. VOC Content: Products shall comply with VOC content limits of authorities having jurisdiction unless otherwise required.

2.2 COLD-APPLIED, EMULSIFIED-ASPHALT DAMPPROOFING

A. Manufacturers: Subject to compliance with requirements, provide products by one of the following:

1. BASF Corporation; Construction Systems.

2. Euclid Chemical Company (The); an RPM company.
3. Henry Company.
4. Karnak Corporation.
5. W. R. Meadows, Inc.

B. Fibered Brush and Spray Coats: ASTM D 1227, Type II, Class 1.

C. Brush and Spray Coats: ASTM D 1227, Type III, Class 1.

2.3 AUXILIARY MATERIALS

A. General: Furnish auxiliary materials recommended in writing by dampproofing manufacturer for intended use and compatible with bituminous dampproofing.

B. Emulsified-Asphalt Primer: ASTM D 1227, Type III, Class 1, except diluted with water as recommended in writing by manufacturer.

C. Asphalt-Coated Glass Fabric: ASTM D 1668, Type I.

D. Patching Compound: Epoxy or latex-modified repair mortar of type recommended in writing by dampproofing manufacturer.

E. Protection Course: Smooth-surfaced roll roofing complying with ASTM D 6380, Class S, Type III.

PART 3 - EXECUTION

3.1 EXAMINATION

A. Examine substrates, areas, and conditions with Applicator present, for compliance with requirements for surface smoothness, surface moisture, and other conditions affecting performance of bituminous dampproofing work.

1. Test for surface moisture according to ASTM D 4263.

B. Proceed with application only after substrate construction and penetrating work have been completed and unsatisfactory conditions have been corrected.

3.2 PREPARATION

A. Mask or otherwise protect adjoining exposed surfaces from being stained, spotted, or coated with dampproofing. Prevent dampproofing materials from entering and clogging weep holes and drains.

B. Clean substrates of projections and substances detrimental to the dampproofing work; fill voids, seal joints, and remove bond breakers if any, as recommended in writing by prime material manufacturer.

C. Apply patching compound to patch and fill tie holes, honeycombs, reveals, and other imperfections; cover with asphalt-coated glass fabric.

3.3 APPLICATION, GENERAL

A. Comply with manufacturer's written instructions for dampproofing application, cure time between coats, and drying time before backfilling unless more stringent requirements are indicated.

1. Apply dampproofing to provide continuous plane of protection.
2. Apply additional coats if recommended in writing by manufacturer or to achieve a smooth surface and uninterrupted coverage.

B. Where dampproofing footings and foundation walls, apply from finished-grade line to top of footing; extend over top of footing and down a minimum of 6 inches (150 mm) over outside face of footing.

1. Extend dampproofing 12 inches (300 mm) onto intersecting walls and footings, but do not extend onto surfaces exposed to view when Project is completed.
2. Install flashings and corner protection stripping at internal and external corners, changes in plane, construction joints, cracks, and where shown as "reinforced," by embedding an 8-inch- (200-mm-) wide strip of asphalt-coated glass fabric in a heavy coat of dampproofing. Dampproofing coat for embedding fabric is in addition to other coats required.

C. Where dampproofing exterior face of inner wythe of exterior masonry cavity walls, lap dampproofing at least 1/4 inch (6 mm) onto flashing, masonry reinforcement, veneer ties, and other items that penetrate inner wythe.

1. Extend dampproofing over outer face of structural members and concrete slabs that interrupt inner wythe.

3.4 COLD-APPLIED, EMULSIFIED-ASPHALT DAMPPROOFING

A. Concrete Foundations and Parged Masonry Foundation Walls: Apply two brush or spray coats at not less than 1.5 gal./100 sq. ft. (0.6 L/sq. m) for first coat and 1 gal./100 sq. ft. (0.4 L/sq. m) for second coat.

B. Unparged Masonry Foundation Walls: Apply primer and two brush or spray coats at not less than 1.5 gal./100 sq. ft. (0.6 L/sq. m) for first coat and 1 gal./100 sq. ft. (0.4 L/sq. m) for second coat.

3.5 INSTALLATION OF PROTECTION COURSE

A. Where indicated, install protection course over completed-and-cured dampproofing. Comply with dampproofing-material and protection-course manufacturers' written instructions for attaching protection course.

1. Support protection course over cured coating with spot application of adhesive type recommended in writing by protection-board manufacturer.
2. Install protection course within 24 hours of installation of dampproofing (while coating is tacky) to ensure adhesion.

3.6 CLEANING

A. Clean spillage and soiling from adjacent construction using cleaning agents and procedures recommended in writing by manufacturer of affected construction.

END OF SECTION 071113

SECTION 071326 - SELF-ADHERING SHEET WATERPROOFING

PART 1 - GENERAL

1.1 RELATED DOCUMENTS

A. Drawings and general provisions of the Contract, including General and Supplementary Conditions and Division 01 Specification Sections, apply to this Section.

1.2 SUMMARY

A. Section Includes:

1. Modified bituminous sheet waterproofing.

1.3 ACTION SUBMITTALS

A. Product Data: For each type of product.

1. Include construction details, material descriptions, and tested physical and performance properties of waterproofing.
2. Include manufacturer's written instructions for evaluating, preparing, and treating substrate.

B. Shop Drawings: Show locations and extent of waterproofing and details of substrate joints and cracks, expansion joints, sheet flashings, penetrations, inside and outside corners, tie-ins with adjoining waterproofing, and other termination conditions.

1. Include setting drawings showing layout, sizes, sections, profiles, and joint details of pedestal-supported concrete pavers.

C. Samples: For each exposed product and for each color and texture specified, including the following products:

1. 8-by-8-inch (200-by-200-mm) square of waterproofing and flashing sheet.

1.4 INFORMATIONAL SUBMITTALS

A. Qualification Data: For Installer.

B. Field quality-control reports.

1.5 QUALITY ASSURANCE

A. Installer Qualifications: An entity that employs installers and supervisors who are trained and approved by waterproofing manufacturer.

1.6 FIELD CONDITIONS

A. Environmental Limitations: Apply waterproofing within the range of ambient and substrate temperatures recommended in writing by waterproofing manufacturer. Do not apply waterproofing to a damp or wet substrate.

1. Do not apply waterproofing in snow, rain, fog, or mist.

B. Maintain adequate ventilation during preparation and application of waterproofing materials.

PART 2 - PRODUCTS

2.1 MANUFACTURERS

A. Source Limitations for Waterproofing System: Obtain waterproofing materials and protection course from single source from single manufacturer.

2.2 MODIFIED BITUMINOUS SHEET WATERPROOFING

A. Modified Bituminous Sheet: Minimum 60-mil (1.5-mm) nominal thickness, self-adhering sheet consisting of 56 mils (1.4 mm) of rubberized asphalt laminated on one side to a 4-mil- (0.10-mm-) thick, polyethylene-film reinforcement, and with release liner on adhesive side.

1. Products: Subject to compliance with requirements, provide one of the following:

a. Carlisle Coatings & Waterproofing Inc; CCW MiraDRI 860/861.
b. Henry Company; Blueskin WP 200.
c. Polyguard Products, Inc.; Polyguard 650 Membrane.
d. W. R. Meadows, Inc; Mel-Rol.
e. York Manufacturing, Inc; HydroGard.

2. Physical Properties:

a. Tensile Strength, Membrane: 250 psi (1.7 MPa) minimum; ASTM D 412, Die C, modified.
b. Ultimate Elongation: 300 percent minimum; ASTM D 412, Die C, modified.
c. Low-Temperature Flexibility: Pass at minus 20 deg F (minus 29 deg C); ASTM D 1970/D 1970M.
d. Crack Cycling: Unaffected after 100 cycles of 1/8-inch (3-mm) movement; ASTM C 836/C 836M.
e. Puncture Resistance: 40 lbf (180 N) minimum; ASTM E 154/E 154M.
f. Water Absorption: 0.2 percent weight-gain maximum after 48-hour immersion at 70 deg F (21 deg C); ASTM D 570.
g. Water Vapor Permeance: 0.05 perm (2.9 ng/Pa x s x sq. m) maximum; ASTM E 96/E 96M, Water Method.
h. Hydrostatic-Head Resistance: 200 feet (60 m) minimum; ASTM D 5385.

3. Sheet Strips: Self-adhering, rubberized-asphalt strips of same material and thickness as sheet waterproofing.

2.3 AUXILIARY MATERIALS

A. Furnish auxiliary materials recommended by waterproofing manufacturer for intended use and compatible with sheet waterproofing.

1. Furnish liquid-type auxiliary materials that comply with VOC limits of authorities having jurisdiction.

B. Primer: Liquid waterborne primer recommended for substrate by sheet-waterproofing material manufacturer.

C. Surface Conditioner: Liquid, waterborne surface conditioner recommended for substrate by sheet-waterproofing material manufacturer.

D. Liquid Membrane: Elastomeric, two-component liquid, cold fluid applied, of trowel grade or low viscosity.

E. Substrate Patching Membrane: Low-viscosity, two-component, modified asphalt coating.

F. Metal Termination Bars: Aluminum bars, approximately 1 by 1/8 inch (25 by 3 mm), predrilled at 9-inch (229-mm) centers.

G. Protection Course: ASTM D 6506, semirigid sheets of fiberglass or mineral-reinforced-asphaltic core, pressure laminated between two asphalt-saturated fibrous liners and as follows:

1. Thickness: Nominal 1/8 inch (3 mm).
2. Adhesive: Rubber-based solvent type recommended by waterproofing manufacturer for protection course type.

PART 3 - EXECUTION

3.1 EXAMINATION

A. Examine substrates, areas, and conditions, with Installer present, for compliance with requirements and other conditions affecting performance of waterproofing.

1. Verify that concrete has cured and aged for minimum time period recommended in writing by waterproofing manufacturer.
2. Verify that substrate is visibly dry and within the moisture limits recommended in writing by manufacturer. Test for capillary moisture by plastic sheet method according to ASTM D 4263.
3. Verify that compacted subgrade is dry, smooth, sound, and ready to receive waterproofing sheet.

B. Proceed with installation only after unsatisfactory conditions have been corrected.

3.2 PREPARATION

A. Clean, prepare, and treat substrates according to manufacturer's written instructions. Provide clean, dust-free, and dry substrates for waterproofing application.

B. Mask off adjoining surfaces not receiving waterproofing to prevent spillage and overspray affecting other construction.

C. Remove grease, oil, bitumen, form-release agents, paints, curing compounds, and other penetrating contaminants or film-forming coatings from concrete.

D. Remove fins, ridges, mortar, and other projections and fill honeycomb, aggregate pockets, holes, and other voids.

E. Prepare, fill, prime, and treat joints and cracks in substrates. Remove dust and dirt from joints and cracks according to ASTM D 4258.

1. Install sheet strips of width according to manufacturer's written instructions and center over treated construction and contraction joints and cracks exceeding a width of 1/16 inch (1.6 mm).

F. Bridge and cover isolation joints, expansion joints, and discontinuous deck-to-wall and deck-to-deck joints with overlapping sheet strips of widths according to manufacturer's written instructions.

1. Invert and loosely lay first sheet strip over center of joint. Firmly adhere second sheet strip to first and overlap to substrate.

G. Corners: Prepare, prime, and treat inside and outside corners according to ASTM D 6135.

1. Install membrane strips centered over vertical inside corners. Install 3/4-inch (19-mm) fillets of liquid membrane on horizontal inside corners and as follows:

a. At footing-to-wall intersections, extend liquid membrane in each direction from corner or install membrane strip centered over corner.
b. At plaza-deck-to-wall intersections, extend liquid membrane or sheet strips onto deck waterproofing and to finished height of sheet flashing.

H. Prepare, treat, and seal vertical and horizontal surfaces at terminations and penetrations through waterproofing and at drains and protrusions according to ASTM D 6135.

3.3 MODIFIED BITUMINOUS SHEET-WATERPROOFING APPLICATION

A. Install modified bituminous sheets according to waterproofing manufacturer's written instructions and per recommendations in ASTM D 6135.

B. Apply primer to substrates at required rate and allow it to dry. Limit priming to areas that will be covered by sheet waterproofing in same day. Reprime areas exposed for more than 24 hours.

C. Apply and firmly adhere sheets over area to receive waterproofing. Accurately align sheets and maintain uniform 2-1/2-inch- (64-mm-) minimum lap widths and end laps. Overlap and seal seams, and stagger end laps to ensure watertight installation.

1. When ambient and substrate temperatures range between 25 and 40 deg F (minus 4 and plus 5 deg C), install self-adhering, modified bituminous sheets produced for low-temperature application. Do not use low-temperature sheets if ambient or substrate temperature is higher than 60 deg F (16 deg C).

D. Two-Ply Application: Install sheets to form a membrane with lap widths not less than 50 percent of sheet widths, to provide a minimum of two thicknesses of sheet membrane over areas to receive waterproofing.

E. Horizontal Application: Apply sheets from low to high points of decks to ensure that laps shed water.

F. Apply continuous sheets over already-installed sheet strips, bridging substrate cracks, construction, and contraction joints.

G. Seal edges of sheet-waterproofing terminations with mastic.

H. Install sheet-waterproofing and auxiliary materials to tie into adjacent waterproofing.

I. Repair tears, voids, and lapped seams in waterproofing not complying with requirements. Slit and flatten fishmouths and blisters. Patch with sheet waterproofing extending 6 inches (150 mm) beyond repaired areas in all directions.

J. Immediately install protection course with butted joints over waterproofing membrane.

3.4 FIELD QUALITY CONTROL

A. Manufacturer's Field Service: Engage a representative qualified by waterproofing membrane manufacturer to inspect substrate conditions, surface preparation, membrane application, flashings, protection, and drainage components; and to furnish reports to Architect.

B. Waterproofing will be considered defective if it does not pass tests and inspections.

C. Prepare test and inspection reports.

3.5 PROTECTION, REPAIR, AND CLEANING

A. Do not permit foot or vehicular traffic on unprotected membrane.

B. Protect waterproofing from damage and wear during remainder of construction period.

C. Protect installed insulation drainage panels from damage due to UV light, harmful weather exposures, physical abuse, and other causes. Provide temporary coverings where insulation is subject to abuse and cannot be concealed and protected by permanent construction immediately after installation.

D. Correct deficiencies in or remove waterproofing that does not comply with requirements; repair substrates, reapply waterproofing, and repair sheet flashings.

E. Clean spillage and soiling from adjacent construction using cleaning agents and procedures recommended in writing by manufacturer of affected construction.

END OF SECTION 071326

SECTION 072100 - THERMAL INSULATION

PART 1 - GENERAL

1.1 RELATED DOCUMENTS

A. Drawings and general provisions of the Contract, including General and Supplementary Conditions and Division 01 Specification Sections, apply to this Section.

1.2 SUMMARY

A. Section Includes:

1. Extruded polystyrene foam-plastic board.
2. Glass-fiber blanket.
3. Mineral-wool blanket.

B. Related Requirements:

1. Section 072736 "Sprayed Foam Air Barrier" for spray-applied polyurethane foam insulating air barrier.
2. Section 072200 "Roof and Deck Insulation" for insulation for roofing construction.

1.3 ACTION SUBMITTALS

A. Product Data: For each type of product.

B. Shop Drawings: For roof insulation:

1. Submit manufacturer’s shop drawings indicating complete installation details of tapered insulation system, including identification of each insulation block, sequence of installation, layout, drain locations, roof slopes, thicknesses, crickets, and saddles.
2. Shop drawings shall include: Outline of roof, locations of drains, complete board layout of tapered insulation components, thicknesses, and the average R value for the completed insulation system.

1.4 INFORMATIONAL SUBMITTALS

A. Evaluation Reports: For foam-plastic insulation, from ICC-ES.

1.5 DELIVERY, STORAGE, AND HANDLING

A. Protect insulation materials from physical damage and from deterioration due to moisture, soiling, and other sources. Store inside and in a dry location. Comply with manufacturer's written instructions for handling, storing, and protecting during installation.

B. Protect foam-plastic board insulation as follows:

1. Do not expose to sunlight except to necessary extent for period of installation and concealment.

2. Protect against ignition at all times. Do not deliver foam-plastic board materials to Project site until just before installation time.
3. Quickly complete installation and concealment of foam-plastic board insulation in each area of construction.

PART 2 - PRODUCTS

2.1 EXTRUDED POLYSTYRENE FOAM-PLASTIC BOARD

A. Extruded polystyrene boards in this article are also called "XPS boards." Roman numeral designators in ASTM C 578 are assigned in a fixed random sequence, and their numeric order does not reflect increasing strength or other characteristics.

B. Extruded Polystyrene Board, Type IV: ASTM C 578, Type IV, 25-psi (173-kPa) minimum compressive strength; unfaced; maximum flame-spread and smoke-developed indexes of 25 and 450, respectively, per ASTM E 84.

C. Manufacturers: Subject to compliance with requirements, provide products by one of the following:

1. Dow Chemical Company (The).
2. Owens Corning.
3. Pactiv Building Products.

2.2 GLASS-FIBER BLANKET

A. Glass-Fiber Blanket, Unfaced: ASTM C 665, Type I; with maximum flame-spread and smoke-developed indexes of 25 and 50, respectively, per ASTM E 84; passing ASTM E 136 for combustion characteristics.

1. Locations: Sound batt insulation.

B. Manufacturers: Subject to compliance with requirements, provide products by one of the following:

1. CertainTeed Corporation.
2. Johns Manville; a Berkshire Hathaway company.
3. Knauf Insulation.
4. Owens Corning.

2.3 MINERAL-WOOL BLANKETS

A. Manufacturers: Subject to compliance with requirements, provide products by one of the following:

1. Roxul Inc.
2. Thermafiber, Inc.; an Owens Corning company.

B. Mineral-Wool Blanket, Unfaced: ASTM C 665, Type I (blankets without membrane facing); consisting of fibers; with maximum flame-spread and smoke-developed indexes of 25 and 50, respectively, per ASTM E 84; passing ASTM E 136 for combustion characteristics.

1. Locations: Sound attenuating fire batt (SAFB) insulation, and exterior ceilings and soffits.

2.4 ACCESSORIES

A. Insulation for Miscellaneous Voids:

1. Glass-Fiber Insulation: ASTM C 764, Type II, loose fill; with maximum flame-spread and smoke-developed indexes of 5, per ASTM E 84.
2. Spray Polyurethane Foam Insulation: ASTM C 1029, Type II, closed cell, with maximum flame-spread and smoke-developed indexes of 75 and 450, respectively, per ASTM E 84.

B. Adhesive for Bonding Insulation (not in roofs): Product compatible with insulation and air and water barrier materials, and with demonstrated capability to bond insulation securely to substrates without damaging insulation and substrates.

PART 3 - EXECUTION

3.1 PREPARATION

A. Clean substrates of substances that are harmful to insulation, including removing projections capable of puncturing insulation or vapor retarders, or that interfere with insulation attachment.

3.2 INSTALLATION, GENERAL

A. Comply with insulation manufacturer's written instructions applicable to products and applications.

B. Install insulation that is undamaged, dry, and unsoiled and that has not been left exposed to ice, rain, or snow at any time.

C. Extend insulation to envelop entire area to be insulated. Fit tightly around obstructions and fill voids with insulation. Remove projections that interfere with placement.

D. Provide sizes to fit applications and selected from manufacturer's standard thicknesses, widths, and lengths. Apply single layer of insulation units unless multiple layers are otherwise shown or required to make up total thickness or to achieve R-value.

3.3 INSTALLATION OF SLAB INSULATION

A. On vertical slab edge and foundation surfaces, set insulation units using manufacturer's recommended adhesive according to manufacturer's written instructions.

1. If not otherwise indicated, extend insulation a minimum of 24 inches (610 mm) below exterior grade line.

3.4 INSTALLATION OF FOUNDATION WALL INSULATION

A. Butt panels together for tight fit.

B. Adhesive Installation: Install with adhesive or press into tacky waterproofing or dampproofing according to manufacturer's written instructions.

3.5 INSTALLATION OF CAVITY-WALL INSULATION

A. Foam-Plastic Board Insulation: Install pads of adhesive spaced approximately 24 inches (610 mm) o.c. both ways on inside face and as recommended by manufacturer. Fit courses of insulation between wall ties and other obstructions, with edges butted tightly in both directions. Press units firmly against inside substrates.

1. Supplement adhesive attachment of insulation by securing boards with two-piece wall ties designed for this purpose and specified in Section 042000 "Unit Masonry."

3.6 INSTALLATION OF INSULATION IN FRAMED CONSTRUCTION

A. Blanket Insulation: Install in cavities formed by framing members according to the following requirements:

1. Use insulation widths and lengths that fill the cavities formed by framing members. If more than one length is required to fill the cavities, provide lengths that will produce a snug fit between ends.
2. Place insulation in cavities formed by framing members to produce a friction fit between edges of insulation and adjoining framing members.
3. Maintain 3-inch (76-mm) clearance of insulation around recessed lighting fixtures not rated for or protected from contact with insulation.
4. For metal-framed wall cavities where cavity heights exceed 96 inches (2438 mm), support unfaced blankets mechanically and support faced blankets by taping flanges of insulation to flanges of metal studs.

B. Miscellaneous Voids: Install insulation in miscellaneous voids and cavity spaces where required to prevent gaps in insulation using the following materials:

1. Glass-Fiber Insulation: Compact to approximately 40 percent of normal maximum volume equaling a density of approximately 2.5 lb/cu. ft. (40 kg/cu. m).
2. Spray Polyurethane Insulation: Apply according to manufacturer's written instructions.

3.7 PROTECTION

A. Protect installed insulation from damage due to harmful weather exposures, physical abuse, and other causes. Provide temporary coverings or enclosures where insulation is subject to abuse and cannot be concealed and protected by permanent construction immediately after installation.

3.8 BATT INSULATION SCHEDULE

A. Provide batts sized to match stud construction, unless otherwise indicated, with R-values as follows:

1. Vertical 3-5/8” Stud: R-13 minimum.
2. Vertical 6” Stud: R-20 minimum.
3. Horizontal Applications: R-49 minimum.

END OF SECTION 072100

SECTION 072500 - WEATHER BARRIERS

PART 1 - GENERAL

1.1 RELATED DOCUMENTS

A. Drawings and general provisions of the Contract, including General and Supplementary Conditions and Division 01 Specification Sections, apply to this Section.

1.2 SUMMARY

A. Section Includes:

1. Building wrap.
2. Flexible flashing.

1.3 ACTION SUBMITTALS

A. Product Data: For each type of product.

1. For building wrap, include data on air and water-vapor permeance based on testing according to referenced standards.

B. Shop Drawings: Show details of building wrap at terminations, openings, and penetrations. Show details of flexible flashing applications.

1.4 INFORMATIONAL SUBMITTALS

A. Evaluation Reports: For water-resistive barrier and flexible flashing, from ICC-ES.

PART 2 - PRODUCTS

2.1 WATER-RESISTIVE BARRIER

A. Building Wrap: ASTM E 1677, Type I air barrier; with flame-spread and smoke-developed indexes of less than 25 and 450, respectively, when tested according to ASTM E 84; UV stabilized; and acceptable to authorities having jurisdiction.

1. Products: Subject to compliance with requirements, provide one of the following:

a. DuPont Building Innovations: E. I. du Pont de Nemours and Company; Tyvek Commercial Wrap.
b. Henry Company; Blueskin VP160.

2. Water-Vapor Permeance: Not less than 20 perms (1150 ng/Pa x s x sq. m) per ASTM E 96/E 96M, Desiccant Method (Procedure A).

3. Air Permeance: Not more than 0.004 cfm/sq. ft. at 0.3-inch wg (0.02 L/s x sq. m at 75 Pa) when tested according to ASTM E 2178.
4. Allowable UV Exposure Time: Not less than three months.
5. Flame Propagation Test: Materials and construction shall be as tested according to NFPA 285.

B. Building-Wrap Tape: Pressure-sensitive plastic tape recommended by building-wrap manufacturer for sealing joints and penetrations in building wrap.

2.2 FLEXIBLE FLASHING

A. Butyl Rubber Flashing: Composite, self-adhesive, flashing product consisting of a pliable, butyl rubber compound, bonded to a high-density polyethylene film, aluminum foil, or spunbonded polyolefin to produce an overall thickness of not less than 0.040 inch (1.0 mm).

1. Flame Propagation Test: Materials and construction shall be as tested according to NFPA 285.

B. Rubberized-Asphalt Flashing: Composite, self-adhesive, flashing product consisting of a pliable, rubberized-asphalt compound, bonded to a high-density polyethylene film, aluminum foil, or spunbonded polyolefin to produce an overall thickness of not less than 0.040 inch (1.0 mm).

1. Flame Propagation Test: Materials and construction shall be as tested according to NFPA 285.

C. Primer for Flexible Flashing: Product recommended in writing by flexible flashing manufacturer for substrate.

D. Nails and Staples: Product recommended in writing by flexible flashing manufacturer and complying with ASTM F 1667.

PART 3 - EXECUTION

3.1 WATER-RESISTIVE BARRIER INSTALLATION

A. Cover exposed exterior surface of sheathing with water-resistive barrier securely fastened to framing immediately after sheathing is installed.

B. Cover sheathing with water-resistive barrier as follows:

1. Cut back barrier 1/2 inch (13 mm) on each side of the break in supporting members at expansion- or control-joint locations.
2. Apply barrier to cover vertical flashing with a minimum 4-inch (100-mm) overlap unless otherwise indicated.

C. Building Wrap: Comply with manufacturer's written instructions and warranty requirements.

1. Seal seams, edges, fasteners, and penetrations with tape.
2. Extend into jambs of openings and seal corners with tape.

3.2 FLEXIBLE FLASHING INSTALLATION

A. Apply flexible flashing where indicated to comply with manufacturer's written instructions.

1. Prime substrates as recommended by flashing manufacturer.
2. Lap seams and junctures with other materials at least 4 inches (100 mm) except that at flashing flanges of other construction, laps need not exceed flange width.
3. Lap flashing over water-resistive barrier at bottom and sides of openings.
4. Lap water-resistive barrier over flashing at heads of openings.
5. After flashing has been applied, roll surfaces with a hard rubber or metal roller to ensure that flashing is completely adhered to substrates.

3.3 DRAINAGE MATERIAL INSTALLATION

A. Install drainage material over building wrap and flashing to comply with manufacturer's written instructions.

END OF SECTION 072500

SECTION 072736 – SPRAYED FOAM AIR BARRIER

PART 1 - GENERAL

1.1 RELATED DOCUMENTS

A. Drawings and general provisions of the Contract, including General and Supplementary Conditions and Division 01 Specification Sections, apply to this Section.

1.2 SUMMARY

A. Section Includes:

1. Closed-cell sprayed polyurethane foam.
2. Sheet rubberized-asphalt barrier (SRAB) self-adhered air/vapor barrier membrane in roof assemblies.
3. Materials to bridge and seal air leakage pathways and gaps.

    a. Connections of the walls to the roof air barrier.
    b. Connections of the walls to the foundations.
    c. Expansion joints.
    d. Openings and penetrations of window frames, store fronts, and curtain walls.
    e. Door frames.
    f. Piping, conduit, duct and similar penetrations
    g. Masonry ties, screws, bolts and similar penetrations.
    h. All other air leakage pathways in the building envelope.

4. Material to act as flashings and counterflashings.

B. Related Requirements:

1. Section 033000 "Cast-In-Place Concrete" for underslab vapor barrier.
2. Section 042000 "Unit Masonry" for masonry backup walls and veneer cavity walls.
3. Section 071113 "Bituminous Dampproofing" for below-grade dampproofing of exterior walls.
4. Section 072100 "Thermal Insulation" for foam-plastic board insulation.
5. Section 076200 "Sheet Metal Flashing and Trim."

1.3 ACTION SUBMITTALS

A. Product Data: For each type of product.

B. Shop Drawings: Show locations and extent of air/vapor barrier and details of all typical conditions, intersections with other envelope systems and materials, membrane flashings and counter-flashings, and details showing how gaps in the construction will be bridged, how inside and outside corners are negotiated and how miscellaneous penetrations such as conduits, pipes electric boxes and the like are sealed.

C. Samples: For each type of air/vapor barrier material, minimum 12 inches by 12 inches.

1.4 INFORMATIONAL SUBMITTALS

A. Certificates: Certification of compatibility by air/vapor barrier manufacturer, listing all materials on the project that it connects to or that come in contact with it.

B. Manufacturer's Installation Instructions: Include instructions for evaluating, preparing, and treating substrate, temperature, and other limitations of installation conditions.

C. Qualification Data: For installer.

D. Product Test Reports: For each product, for tests performed by a qualified testing agency.

E. Evaluation Reports: For spray foam air barrier, from ICC-ES.

1.5 QUALITY ASSURANCE

A. Installer Qualifications:

1. An authorized representative who is trained and approved by manufacturer.

a. Subject to compliance with requirements, work shall be performed by one of the following installers:

1) Royals Insulation, 212-A Najoles Road, Millersville, Maryland 21108. (410)729-0405, fax (410)729-0825. Attn: Stu Royals.
2) PUFF Inc., 1851 Gleco Mills Lane, Charlottesville, Virginia 22903. (434)977-0427, fax (434)977-0428. Attn: Bonnie Strickler.
3) Capital Insulation Services, 8265 Patuxent Range Road, Jessup, Maryland 20794. (240)712-1734. Attn: Robert Procida.
4) Summit Insulation & Contracting, 8246 Beachwood Road, Baltimore, Maryland 21222. (410)644-8000. Attn: Dan Biser.

2. Requests for other Installers will be considered only during Biding period. Refer to Section 002600 "Procurement Substitution Procedures."

a. Request for substitution shall include qualification information that shows that installer is experienced in accordance with Section 014000 "Quality Requirements."
b. Request shall include the following:

1) List of projects successfully completed.

a) Project name
b) Location
c) Date completed
d) Size of installation, in square feet of exterior wall sprayed
e) Thickness of foam
f) Foam product used
g) Was project ABAA inspected
h) List of installers on the project who will be working on this Project

2) List of three references

a) Name
b) Title

c) Company
d) Phone number
e) Email address
f) What listed project(s) reference was part of
g) Role on listed project (e.g., Owner, Contractor, etc.)

3. Contractor shall be licensed and certified under Air Barrier Association of America's (ABAA's) Quality Assurance Program, at the time of bid and throughout duration of Work.
4. Each worker who is installing spray foam air barriers must be either a Certified Applicator or an installer who is registered with ABAA.
5. Installers must be trained and certified by ABAA/NECA and PSDI (Professional Skills Development Institute for energy conservation) in accordance with the training requirements outlined in the ULC S705.2-02 Installation Standard. Installers shall have their photo identification certification cards in their possession and available on the project site for inspection, upon request.

B. Single-Source Responsibility: Obtain air/vapor barrier materials from a single manufacturer regularly engaged in manufacturing the product.

C. Preconstruction Meeting: Convene one week prior to commencing Work of this section, in accordance with Division 01 requirements.

D. Preconstruction Testing Service: Engage a qualified testing agency to perform preconstruction testing on field mockups.

E. Mockups: Prior to installation of spray foam air barrier, apply spray foam air barrier as follows to verify details under shop drawing submittals and to demonstrate tie-ins with adjoining construction, and other termination conditions, as well as qualities of materials and execution:

1. Apply spray foam air barrier in field-constructed mock-ups of assemblies specified in Section 042000.
2. Apply spray foam air barrier in field-constructed mock-ups of assemblies per Division 01 requirements.
3. Construct typical exterior wall panel, 8 feet long by 8 feet wide, incorporating back-up wall, partial cladding, window and doorframe and sill, insulation, flashing, building corner condition, junction with roof system foundation wall and typical penetrations and gaps; illustrating materials interface and seals. All transition membranes and seals shall be installed per the manufacturer's system requirements.
4. Mockup Testing: Air-barrier assemblies shall comply with performance requirements indicated, as evidenced by reports based on mockup testing by a qualified testing agency
5. Coordinate construction of mockups to permit inspection and testing of air barrier and components before external framing and cladding are installed.
6. Test mock-up for air and water infiltration to conform with Division 01 Section Quality Control, in accordance with ASTM E 783 and ASTM E 1105.
7. Adhesion Testing: Test mockups required air-barrier adhesion to substrate according to ASTM D 4541.

F. Cooperate with Owner's inspection and testing agency. Do not cover any installed spray foam air barrier unless it has been inspected, tested, and approved.

G. Protect people, materials, property, and other areas that may be negatively impacted from over-spray and contact with chemical and gases.

1.6 DELIVERY, STORAGE, AND HANDLING

A. Deliver materials to Project site in original packages with seals unbroken, labeled with manufacturer's name, product, date of manufacture, expiration date, and directions for storage.

B. Store materials in their original undamaged packages in a clean, dry, protected location and within temperature range required by air/vapor barrier manufacturer. Protect stored materials from direct sunlight.

C. Avoid spillage. Immediately notify Owner and Construction Manager if spillage occurs and start clean up procedures.

D. Clean spills and leave area as it was prior to spill.

E. Separate and recycle waste materials in accordance with Construction Waste Management requirements.

F. Place materials defined as hazardous or toxic waste in designated containers.

G. Ensure emptied containers are sealed and stored safely for disposal away from children.

1.7 PROJECT CONDITIONS

A. Environmental Conditions: Apply spray foam air barrier within range of ambient and substrate temperatures recommended by manufacturer. Do not apply spray foam air barrier to a damp or wet substrate, unless the manufacturer specifically permits that for the product.

1. Do not apply spray foam air barrier in snow, rain, fog, or mist.
2. Do not apply spray foam air barrier when the temperature of substrate surfaces and surrounding air temperatures are below those recommended by the manufacturer.
3. The product shall not be installed after the expiry date printed on the label of each container. The product has a shelf life of 6 months from the date of manufacture.

1.8 WARRANTY

A. For sealant and membrane materials provide a 24 month warranty period.

B. Material Warranty: Provide manufacturer’s three year air/vapor barrier material warranty.

C. System Warranty: Provide the manufacturer’s three year system warranty, including the primary air/vapor barrier and installed accessory sealant and membrane materials which fail to achieve air tight and watertight seal, exhibit loss of adhesion or cohesion, or do not cure.

PART 2 - PRODUCTS

2.1 PERFORMANCE REQUIREMENTS

A. General: Provide spray foam air barrier system constructed to perform as a continuous air and vapor barrier system, as building thermal insulation, and as a liquid water drainage plane flashed to discharge to the exterior any incidental condensation or water penetration. System shall accommodate movements of building materials by providing expansion and control joints as required, with accessory air seal materials at such locations, changes in substrate and perimeter conditions.

1. Materials shall for spray foam air barrier shall be tested and conform to ASTM E 2178.

B. Air Permeability: less than 0.01 L/(s*m^2) when tested per ASTM E 2178.

C. Vapor Permeability: Class II, per ASTM E 96.

D. Adhesion to Substrate: 16 lbf/sq. in. when tested according to ASTM D 4541 as modified by ABAA.

2.2 CLOSED-CELL SPRAY POLYURETHANE FOAM

A. Closed-Cell Spray Polyurethane Foam: ASTM C 1029, Type II, minimum density of 1.9 lb/cu.ft. and minimum aged R-value at 1-inch (25.4-mm) thickness of 6.2 deg F x h x sq. ft./Btu at 75 deg F (43 K x sq. m/W at 24 deg C).

1. Basis-of-Design Product: Subject to compliance with requirements, provide BASF Corporation; SPF; Walltite® or a comparable product by one of the following:

   a. Dow Chemical Company (The).
   b. Icynene Inc.

2. Surface-Burning Characteristics: Comply with ASTM E 84; testing by a qualified testing agency. Identify products with appropriate markings of applicable testing agency.

   a. Flame-Spread Index: 25 or less.
   b. Smoke-Developed Index: 400 or less.
   c. Tested Thickness: 3 inches minimum.

3. Sprayed polyurethane foam material, when tested, shall meet the requirements of ULC S705.1-01 Standard for Thermal Insulation-Spray Applied Rigid Polyurethane Foam, Medium Density, Material- Specification.
4. A copy of an Evaluation Report (such as the CCMC Evaluation Report) or copies of the test reports from an accredited testing laboratory, for each physical property, indicating that the product meets the requirements of ULC S705.1-01 shall be made available upon request. A copy of either the evaluation report or the test reports shall be on file at the ABAA office.
5. Material containers shall be labeled with the Evaluation Report number of the evaluation agency.

2.3 AUXILIARY MATERIALS

A. Furnish auxiliary materials recommended by spray foam air barrier manufacturer for intended use and compatible with the spray foam air barrier.

B. Self-adhering modified asphalt/polyethylene flashing to counterflash metal flashings:

1. Bakor Blueskin® TWF.

C. Primer: Water based liquid primer for concrete, masonry, gypsum sheathing, wood, metal, and painted substrates;

1. Aquatac® as manufactured by Bakor Inc.

D. Primer: Solvent based, VOC compliant primer for concrete, masonry, gypsum sheathing, wood, metal, and painted substrates;

1. Blueskin® Primer by Bakor, Inc.

E. Mastic, Adhesives, and Tape: Liquid mastic and adhesives, and adhesive tapes by SRAB air/vapor barrier manufacturer.

F. Stainless-Steel Sheet Flashing: ASTM A167, Type 304, soft annealed, with No. 2D finish; minimum, 0.0156 inch (0.4 mm) thick.

G. Transition Strip: Self-adhering, smooth surfaced SBS modified bitumen membrane, nominal 40 mil thickness, width as required.

1. Blueskin® SA as manufactured by Bakor Inc.

H. Transition Strip Primer:

1. Blueskin® Primer as manufactured by Bakor Inc.

I. Sheet Membrane Transition Strip Termination Sealant:

1. Polybitume 570-05 by Bakor Inc.

J. Sheet Membrane Air Barrier Perimeter Seal to Windows, Doors, Curtainwall, Storefront, Louver, and other penetration systems: Non-reinforced, cured chloroprene polymer sheet (neoprene) complying with ASTM D2000 Designation 2BC415 to 3BC620, 50 to 65 mils (1.3 to 1.6 mm) thick.

1. Adhesive: Typical contact-type adhesive used for fully-adhered membranes.
2. Lap Sealant: Typical urethane or silicone lap and termination sealant used for membrane edges recommended by manufacturer.
3. Termination bars and fasteners:

a. Stainless steel, Aluminum bars, and stainless fasteners Galvanized steel.

K. Closure Membranes: Reinforced polymer membrane flashing for closure and bridging of cavity at windows, doors, curtainwall, storefront, louver, and other penetration systems.

1. Hyload Jamb Closure Membrane.

L. Sheet Membrane Sheet Membrane Air Barrier Perimeter Seal to Windows, Doors, Curtainwall and Storefront systems: Low modulus silicone sheet; provide manufacturer's standard system consisting of precured low-modulus silicone extrusion, in sizes to fit widths indicated, combined with a neutral-curing low modulus silicone sealant for bonding extrusions to substrates.

1. Pecora Sil-Span.
2. Dow 1-2-3 or equal.

M. Provide sealants in accordance with Section 079200 - Joint Sealants. Comply with ASTM C920 and ASTM C920 classifications for type, grade, class, and uses:

1. Silicone Sealant Type A: natural cure, low modulus, to seal sheet membrane flashing to polyethylene face of sheet rubberized-asphalt barrier and to seal between and to non-bituminous sheet systems.

a. Acceptable materials:

1) Dow 790

2) Pecora 864

b. SPF (Sprayed Polyurethane Foam) Sealant: Provide one- or two-component, foamed-in-place, polyurethane foam sealant with the following characteristics:

1) Density: 1.5 to 2.0 PCF.
2) Flame Spread (ASTM E162): 25 or less.
3) Initial R-Value (at 1 inch): Not less than 7. Acceptable materials:

a) Zerodraft Foam Sealant.
b) Zerodraft Insulating Air Sealant
c) Zerodraft (Division of Canam Building Envelope Specialists Inc.), 125 Traders Blvd. E., Unit # 4, Mississauga, ON, L4Z 2H3 Tel. 1-877-272-2626

2. Substrate Cleaner: Non-corrosive type recommended by sealant manufacturer compatible with adjacent materials.

2.4 EQUIPMENT

A. The equipment used to spray the polyurethane foam material shall be in accordance with ULC S705.2-02 and the equipment manufacturer’s recommendations for specific type of application.

B. Equipment settings are to be recorded on the Daily Work Record as required by the ULC S705.2-02 Installation standard.

C. Each proportioner unit to supply only one spray gun.

PART 3 - EXECUTION

3.1 PREPARATION

A. Verify that substrates are clean, dry, and free of substances that are harmful to insulation. Concrete shall be cured and dry, smooth and without large voids, spalled areas, or sharp protrusions. Masonry shall have joints struck flush, completed filled with mortar, and all excess mortar on face of masonry and ties removed.

1. Verify substrate is visibly dry and free of moisture. Test for capillary moisture by plastic sheet method according to ASTM D4263.
2. Notify Architect in writing of anticipated problems using air/vapor barrier over substrate.

B. Priming: Prime substrates where recommended by insulation manufacturer. Apply primer to comply with insulation manufacturer's written instructions. Confine primers to areas to be insulated; do not allow spillage or migration onto adjoining surfaces.

3.2 SURFACE PREPARATION

A. Clean, prepare, and treat substrate according to manufacturer's written instructions. Provide clean, dust-free, and dry substrate for air/vapor barrier application.

B. Prime masonry, concrete substrates with conditioning primer when installing modified asphalt membrane transition membranes.

C. Prime glass-fiber surfaced gypsum sheathing an adequate number of coats to achieve required bond to transition membranes, with adequate drying time between coats.

D. Prime wood, metal, and painted substrates with primer recommended by membrane manufacturer.

E. Prepare, treat, and seal vertical and horizontal surfaces at terminations and penetrations through air/vapor barrier and at protrusions according to air/vapor barrier manufacturer's written instructions and approved tested system in accordance with ABAA air barrier testing protocol.

1. Verify that surfaces and conditions are suitable to accept work as outlined in this section.
2. Prior to commencement of work report in writing to the architect any defects in surfaces or conditions that may adversely affect the performance of products installed under this section.
3. Commencement of work outlined in this section shall be deemed as acceptance of existing work and conditions.
4. Examine joints before sealing to ensure configurations, surfaces and widths are suitable for spray polyurethane foam. Report in writing all defects stating the locations of joints deemed unacceptable for the application of the spray polyurethane foam.

3.3 PREPARATION

A. Protection:

1. Mask and cover adjacent areas to protect from over spray.
2. Ensure any required foam stop or back up material are in place to prevent over spray and achieve complete seal.
3. Seal off existing ventilation equipment. Install temporary ducting and fans to ensure exhaust fumes. Provide for make-up air.
4. Erect barriers, isolate area and post warning signs to advise non-protected personnel to avoid the spray area.

B. Surface Preparation

1. Surfaces to receive foam insulation shall be clean, dry and properly fastened to ensure adhesion of the polyurethane foam to the substrate.
2. Ensure that all work by other trades that may penetrate through the air barrier system is in place and complete.
3. Ensure that surface preparation and any primers required conform to the manufacturers instructions.
4. Prepare surfaces by brushing, scrubbing. Scraping, or grinding to remove loose mortar, dust, oil, grease, oxidation, mill scale and other contaminants which will affect adhesion and integrity of the spray polyurethane foam. Wipe down metal surfaces to remove release agents or other non-compatible coatings, using clean sponges or rags soaked in a solvent compatible with the spray polyurethane foam. Ensure surfaces are dry before proceeding.
5. Install transition membranes to all applicable surfaces and ensure proper adhesion of the transition membranes to the substrate, capable of having spray polyurethane foam insulation.
6. Install counter-flashings:

    a. Metal: Mechanically fasten metal counter-flashings with screws at 8” (200 mm) o.c.
    b. Membrane: Cut into and uncover only 3” of siliconized release paper along one edge of the counter-flashing membrane. Adhere membrane flashing to the pre-primed substrate a minimum of 3” and roll firmly in place.

7. Ensure veneer anchors are in place.

3.4 INSTALLATION

A. Spray-application of polyurethane foam shall be installed in accordance with ULC S705.2-02 and the manufacturer's instructions.

B. Apply only when surfaces and environmental conditions are within limits prescribed by the material manufacturer and the ULC S705.2 Installation standard.

C. Apply in consecutive passes as recommended by manufacturer to thickness as indicated on drawings. Passes shall be not less than ½ inch and not greater than 2 inches.

D. Do not install spray polyurethane foam within 3 inches of heat emitting devices such as light fixtures and chimneys.

E. Finished surface of foam insulation to be free of voids and embedded foreign objects.

F. Remove masking materials and over spray from adjacent areas immediately after foam surface has hardened. Ensure cleaning methods do not damage work performed by other sections.

G. Trim, as required, any excess thickness that would interfere with the application of cladding/covering system by other trades.

H. Clean and restore surfaces soiled or damaged by work of the section. Consult with section of work soiled before cleaning to ensure methods used will not damage the work.

I. Do not permit adjacent work to be damaged by work of this section. Damage to work of this section caused by other sections shall be repaired by this section at the expense of the subcontractor causing the damage.

J. Complete connections to other components or repair any gaps, holes or other damage using material which conforms to ULC S710.1 Polyurethane Sealant Foam – One Component – Material or ULC S711.1 Polyurethane Sealant Foam – Two Components – Material and shall be installed in accordance with ULC S710.2 Polyurethane Sealant Foam – One component – Installation or ULC S711.2 Polyurethane Sealant Foam – Two Component – Installation, whichever is appropriate.

K. Tolerance: Maximum variation from indicated thickness minus 1/4 inch, plus 1/2 inch.

3.5 FIELD QUALITY CONTROL

A. Mockup Tests: As determined by testing agency from among the following tests:

1. Adhesion Testing: Air-barrier membranes assemblies will be tested for required adhesion to substrate according to ASTM D 4541.

B. Site Tests

1. The Licensed Installer shall conduct daily visual inspection, adhesion/cohesion testing and density measurements as outlined by the ULC S705.2-02 Installation standard.
2. The Licensed Installer shall complete the Daily Work Record and record all information required including the results of the testing. The Daily Work Record shall be kept on site for routine inspection. Copies of the Daily Work Record shall be forwarded to the owner or owner's representative upon request. Copies of the Daily Work Record or monthly summaries shall be sent to the ABAA office on a monthly basis as required by the Quality Assurance Program.

3. Transition membranes shall be pull tested in accordance with the ABAA Quality Assurance Program requirements before installing the spray polyurethane air barrier material.
4. The costs incurred for daily testing and inspection by the Licensed Installer and the completion of the Daily Work Record shall be borne by the Licensed Contractor.

C. Inspection

1. Arrange for site inspections by ABAA. The cost of inspections shall be included in the bid provided by the Licensed Contractor.
2. The ABAA site-inspections shall verify conformance with the manufacturers instructions, the standard ULC S705.2-02 Installation standard, the ABAA Quality Assurance Program, and this section of the project specification.
3. Inspections and testing shall be carried out at 5%, 50% and 95% of completion. A written inspection report shall be forwarded to the architect, the owner's representative, the Contractor, and the ABAA-licensed installer within 3 working days of the inspection and test being performed. In the case of any deficiencies, the ABAA-licensed inspector may verbally advise the licensed installer at the time of the inspection.
4. If the inspection reveals any defects, the Licensed Contractor shall immediately rectify all such defects at his cost.

3.6 PROTECTION

A. Protect installed insulation from damage due to harmful weather exposures including ultraviolet radiation, physical abuse, and other causes.

B. Cover spray polyurethane foam with a thermal barrier when installed on the interior of the building.

END OF SECTION 072736

SECTION 074113.16 - STANDING-SEAM METAL ROOF PANELS

PART 1 - GENERAL

1.1 RELATED DOCUMENTS

A. Drawings and general provisions of the Contract, including General and Supplementary Conditions and Division 01 Specification Sections, apply to this Section.

1.2 SUMMARY

A. Section includes standing-seam metal roof panels.

B. Related Sections:

1. Section 072210 "Roof and Deck Insulation" for rigid insulation substrates for roof assembly.
2. Section 072736 "Sprayed Foam Air Barrier" for air barriers and transitions to roof system.
3. Section 074293 "Soffit Panels" for metal panels used in horizontal soffit applications.
4. Section 077253 "Snow Guards" for prefabricated devices designed to hold snow on the roof surface, allowing it to melt and drain off slowly.

1.3 PREINSTALLATION MEETINGS

A. Preinstallation Conference: Conduct conference at Project site.

1. Meet with Owner, Architect, Owner's insurer if applicable, metal panel Installer, metal panel manufacturer's representative, structural-support Installer, and installers whose work interfaces with or affects metal panels, including installers of roof accessories and roof-mounted equipment.
2. Review and finalize construction schedule and verify availability of materials, Installer's personnel, equipment, and facilities needed to make progress and avoid delays.
3. Review methods and procedures related to metal panel installation, including manufacturer's written instructions.
4. Examine support conditions for compliance with requirements, including alignment between and attachment to structural members.
5. Review structural loading limitations of deck during and after roofing.
6. Review flashings, special details, drainage, penetrations, equipment curbs, and condition of other construction that affect metal panels.
7. Review governing regulations and requirements for insurance, certificates, and tests and inspections if applicable.
8. Review temporary protection requirements for metal panel systems during and after installation.
9. Review procedures for repair of metal panels damaged after installation.
10. Document proceedings, including corrective measures and actions required, and furnish copy of record to each participant.

1.4 ACTION SUBMITTALS

A. Product Data: For each type of product.

1. Include construction details, material descriptions, dimensions of individual components and profiles, and finishes for each type of panel and accessory.

B. Shop Drawings:

1. Include fabrication and installation layouts of metal panels; details of edge conditions, joints, panel profiles, corners, anchorages, attachment system, trim, flashings, closures, and accessories; and special details.
2. Accessories: Include details of the flashing, trim, and anchorage systems, at a scale of not less than 1-1/2 inches per 12 inches (1:10).

C. Delegated-Design Submittal: For standing-seam metal roof system, including analysis data signed and sealed by the qualified professional engineer responsible for their preparation.

D. Samples for Initial Selection: For each type of metal panel indicated with factory-applied color finishes.

1. Include similar Samples of trim and accessories involving color selection.

E. Samples for Verification: For each type of exposed finish required, prepared on Samples of size indicated below.

1. Metal Panels: 12 inches (305 mm) long by actual panel width. Include clips, fasteners, closures, and other metal panel accessories.

1.5 INFORMATIONAL SUBMITTALS

A. Qualification Data: For Installer.

B. Qualification Data: For professional engineer.

C. Product Test Reports: For each product, for tests performed by a qualified testing agency.

D. Field quality-control reports.

1.6 CLOSEOUT SUBMITTALS

A. Maintenance Data: For metal panels to include in maintenance manuals.

1.7 QUALITY ASSURANCE

A. Installer Qualifications: An entity that employs installers and supervisors who are trained and approved by manufacturer.

B. Delegated Design: Engage a qualified professional engineer, as defined in Section 014000 "Quality Requirements."

C. Mockups: Build mockups to verify selections made under Sample submittals and to demonstrate aesthetic effects and set quality standards for fabrication and installation.

1. Build mockup of typical roof area and eave, including fascia, and soffit as shown on Drawings; approximately 48 inches (1200 mm) square by full thickness, including attachments, underlayment, and accessories.

2. Approval of mockups does not constitute approval of deviations from the Contract Documents contained in mockups unless Architect specifically approves such deviations in writing.
3. Approved mockups may become part of the completed Work if undisturbed at time of Substantial Completion.

1.8 DELIVERY, STORAGE, AND HANDLING

A. Deliver components, metal panels, and other manufactured items so as not to be damaged or deformed. Package metal panels for protection during transportation and handling.

B. Unload, store, and erect metal panels in a manner to prevent bending, warping, twisting, and surface damage.

C. Stack metal panels horizontally on platforms or pallets, covered with suitable weathertight and ventilated covering. Store metal panels to ensure dryness, with positive slope for drainage of water. Do not store metal panels in contact with other materials that might cause staining, denting, or other surface damage.

D. Retain strippable protective covering on metal panels during installation.

1.9 FIELD CONDITIONS

A. Weather Limitations: Proceed with installation only when existing and forecasted weather conditions permit assembly of metal panels to be performed according to manufacturers' written instructions and warranty requirements.

1.10 COORDINATION

A. Coordinate sizes and locations of roof curbs, equipment supports, and roof penetrations with actual equipment provided.

B. Coordinate metal panel installation with rain drainage work, flashing, trim, construction of soffits, and other adjoining work to provide a leakproof, secure, and noncorrosive installation.

1.11 WARRANTY

A. Special Warranty: Manufacturer's standard form in which manufacturer agrees to repair or replace components of metal panel systems that fail in materials or workmanship within specified warranty period.

1. Failures include, but are not limited to, the following:

a. Structural failures including rupturing, cracking, or puncturing.
b. Deterioration of metals and other materials beyond normal weathering.

2. Warranty Period: Two years from date of Substantial Completion.

B. Special Warranty on Panel Finishes: Manufacturer's standard form in which manufacturer agrees to repair finish or replace metal panels that show evidence of deterioration of factory-applied finishes within specified warranty period.

1. Exposed Panel Finish: Deterioration includes, but is not limited to, the following:

a. Color fading more than 5 Hunter units when tested according to ASTM D 2244.
b. Chalking in excess of a No. 8 rating when tested according to ASTM D 4214.
c. Cracking, checking, peeling, or failure of paint to adhere to bare metal.

2. Finish Warranty Period: 20 years from date of Substantial Completion.

C. Special Weathertightness Warranty: Manufacturer's standard form in which manufacturer agrees to repair or replace standing-seam metal roof panel assemblies that fail to remain weathertight, including leaks, within specified warranty period.

1. Warranty Period: 30 years from date of Substantial Completion.

PART 2 - PRODUCTS

2.1 PERFORMANCE REQUIREMENTS

A. Energy Performance: Provide roof panels that are listed on the EPA/DOE's ENERGY STAR "Roof Product List" for steep-slope roof products.

B. Energy Performance: Provide roof panels according to one of the following when tested according to CRRC-1:

1. Three-year, aged Solar Reflectance Index of not less than 29 when calculated according to ASTM E 1980.

C. Structural Performance: Provide metal panel systems capable of withstanding the effects of the following loads, based on testing according to ASTM E 1592:

1. Wind Loads: As indicated on Drawings.
2. Other Design Loads: As indicated on Drawings.
3. Deflection Limits: For wind loads, no greater than 1/180 of the span.

D. Air Infiltration: Air leakage of not more than 0.06 cfm/sq. ft. (0.3 L/s per sq. m) when tested according to ASTM E 1680 at the following test-pressure difference:

1. Test-Pressure Difference: 6.24 lbf/sq. ft. (300 Pa).

E. Water Penetration under Static Pressure: No water penetration when tested according to ASTM E 1646 at the following test-pressure difference:

1. Test-Pressure Difference: 6.24 lbf/sq. ft. (300 Pa).

F. Hydrostatic-Head Resistance: No water penetration when tested according to ASTM E 2140.

G. Wind-Uplift Resistance: Provide metal roof panel assemblies that comply with UL 580 for wind-uplift-resistance class indicated.

1. Uplift Rating: UL 90.

H. FM Global Listing: Provide metal roof panels and component materials that comply with requirements in FM Global 4471 as part of a panel roofing system and that are listed in FM Global's "Approval Guide" for Class 1 or noncombustible construction, as applicable. Identify materials with FM Global markings.

1. Fire/Windstorm Classification: Class 1A- 90.
2. Hail Resistance: MH.

I. Thermal Movements: Allow for thermal movements from ambient and surface temperature changes by preventing buckling, opening of joints, overstressing of components, failure of joint sealants, failure of connections, and other detrimental effects. Base calculations on surface temperatures of materials due to both solar heat gain and nighttime-sky heat loss.

1. Temperature Change (Range): 120 deg F (67 deg C), ambient; 180 deg F (100 deg C), material surfaces.

2.2 STANDING-SEAM METAL ROOF PANELS

A. General: Provide factory-formed metal roof panels designed to be installed by lapping and interconnecting raised side edges of adjacent panels with joint type indicated and mechanically attaching panels to supports using concealed clips in side laps. Include clips, cleats, pressure plates, and accessories required for weathertight installation.

1. Steel Panel Systems: Unless more stringent requirements are indicated, comply with ASTM E 1514.

B. Vertical-Rib, Seamed-Joint, Standing-Seam Metal Roof Panels: Formed with vertical ribs at panel edges and intermediate stiffening pencil ribs symmetrically spaced between ribs; designed for sequential installation by mechanically attaching panels to supports using concealed clips located under one side of panels, engaging opposite edge of adjacent panels, and mechanically seaming panels together.

1. Basis-of-Design Product: Subject to compliance with requirements, provide Tremco, Inc; Tremlock VP 16” wide with pencil ribs at typical metal roofs and TremLock Narrow Batten 12” wide with striated ribs at eyebrows or a comparable product by one of the following:

a. ATAS International, Inc.
b. CENTRIA Architectural Systems.
c. Drexel Metals.
d. Garland Company, Inc. (The).
e. Merchant & Evans, Inc.
f. Morin - A Kingspan Group Company.
g. PAC-CLAD; Petersen Aluminum Corporation.

2. Metallic-Coated Steel Sheet: Zinc-coated (galvanized) steel sheet complying with ASTM A 653/A 653M, G90 (Z275) coating designation, or aluminum-zinc alloy-coated steel sheet complying with ASTM A 792/A 792M, Class AZ50 (Class AZM150) coating designation; structural quality. Prepainted by the coil-coating process to comply with ASTM A 755/A 755M.

a. Nominal Thickness: 0.028 inch (0.71 mm).
b. Exterior Finish: Two-coat fluoropolymer.
c. Color: Match Architect’s sample.

3. Clips: Two-piece floating to accommodate thermal movement.

a. Material: 0.064-inch- (1.63-mm-) nominal thickness, zinc-coated (galvanized) or aluminum-zinc alloy-coated steel sheet.

4. Joint Type: As standard with manufacturer.
5. Panel Coverage: 16 inches (406 mm).

6. Panel Height: 2.0 inches (51 mm).

2.3 UNDERLAYMENT MATERIALS

A. Self-Adhering, High-Temperature Underlayment: Provide self-adhering, cold-applied, sheet underlayment, a minimum of 30 mils (0.76 mm) thick, consisting of slip-resistant, polyethylene-film top surface laminated to a layer of butyl or SBS-modified asphalt adhesive, with release-paper backing. Provide primer when recommended by underlayment manufacturer.

1. Thermal Stability: Stable after testing at 240 deg F (116 deg C); ASTM D 1970.
2. Low-Temperature Flexibility: Passes after testing at minus 20 deg F (29 deg C); ASTM D 1970.
3. Products: Subject to compliance with requirements, provide one of the following:

a. Carlisle Residential; a division of Carlisle Construction Materials; WIP 300HT.
b. Drexel Metals; MetShield.
c. GCP Applied Technologies Inc. (formerly Grace Construction Products); Grace Ice and Water Shield HT.
d. Henry Company; Blueskin PE200 HT.
e. Owens Corning; WeatherLock Metal High Temperature Underlayment.
f. Other product recommended in writing by roof panel manufacturer.

B. Slip Sheet: Manufacturer's recommended slip sheet, of type required for application.

2.4 MISCELLANEOUS MATERIALS

A. Miscellaneous Metal Subframing and Furring: ASTM C 645; cold-formed, metallic-coated steel sheet, ASTM A 653/A 653M, G90 (Z275 hot-dip galvanized) coating designation or ASTM A 792/A 792M, Class AZ50 (Class AZM150) coating designation unless otherwise indicated. Provide manufacturer's standard sections as required for support and alignment of metal panel system.

B. Panel Accessories: Provide components required for a complete, weathertight panel system including trim, copings, fasciae, mullions, sills, corner units, clips, flashings, sealants, gaskets, fillers, closure strips, and similar items. Match material and finish of metal panels unless otherwise indicated.

1. Closures: Provide closures at eaves and ridges, fabricated of same metal as metal panels.
2. Backing Plates: Provide metal backing plates at panel end splices, fabricated from material recommended by manufacturer.
3. Closure Strips: Closed-cell, expanded, cellular, rubber or crosslinked, polyolefin-foam or closed-cell laminated polyethylene; minimum 1-inch- (25-mm-) thick, flexible closure strips; cut or premolded to match metal panel profile. Provide closure strips where indicated or necessary to ensure weathertight construction.

C. Flashing and Trim: Provide flashing and trim formed from same material as metal panels as required to seal against weather and to provide finished appearance. Locations include, but are not limited to, eaves, rakes, corners, bases, framed openings, ridges, fasciae, and fillers. Finish flashing and trim with same finish system as adjacent metal panels.

D. Gutters: Formed from same material as roof panels, complete with end pieces, outlet tubes, and other special pieces as required. Fabricate in minimum 96-inch- (2400-mm-) long sections, of size and metal thickness according to SMACNA's "Architectural Sheet Metal Manual." Furnish gutter supports spaced a maximum of 36 inches (914 mm) o.c., fabricated from same metal as gutters. Provide wire ball strainers of compatible metal at outlets. Finish gutters in color selected by Architect from manufacturers full range, including color to match roof panels.

E. Downspouts: Formed from same material as roof panels. Fabricate in 10-foot- (3-m-) long sections, complete with formed elbows and offsets, of size and metal thickness according to SMACNA's "Architectural Sheet Metal Manual." Finish downspouts in color selected by Architect from manufacturers full range, including color to match roof panels.

F. Roof Curbs: Fabricated from same material as roof panels, 0.048-inch (1.2-mm) nominal thickness; with bottom of skirt profiled to match roof panel profiles and with welded top box and integral full-length cricket. Fabricate curb subframing of 0.060-inch- (1.52-mm-) nominal thickness, angle-, C-, or Z-shaped steel sheet. Fabricate curb and subframing to withstand indicated loads of size and height indicated. Finish roof curbs to match metal roof panels.

1. Insulate roof curb with 2-inch- (51-mm-) thick, rigid insulation.

G. Panel Fasteners: Self-tapping screws designed to withstand design loads.

H. Panel Sealants: Provide sealant type recommended by manufacturer that are compatible with panel materials, are nonstaining, and do not damage panel finish.

1. Sealant Tape: Pressure-sensitive, 100 percent solids, gray polyisobutylene compound sealant tape with release-paper backing. Provide permanently elastic, nonsag, nontoxic, nonstaining tape 1/2 inch (13 mm) wide and 1/8 inch (3 mm) thick.
2. Joint Sealant: ASTM C 920; elastomeric polyurethane or silicone sealant; of type, grade, class, and use classifications required to seal joints in metal panels and remain weathertight; and as recommended in writing by metal panel manufacturer.
3. Butyl-Rubber-Based, Solvent-Release Sealant: ASTM C 1311.

2.5 FABRICATION

A. General: Fabricate and finish metal panels and accessories at the factory, by manufacturer's standard procedures and processes, as necessary to fulfill indicated performance requirements demonstrated by laboratory testing. Comply with indicated profiles and with dimensional and structural requirements.

B. On-Site Fabrication: Subject to compliance with requirements of this Section, metal panels may be fabricated on-site using UL-certified, portable roll-forming equipment if panels are of same profile and warranted by manufacturer to be equal to factory-formed panels. Fabricate according to equipment manufacturer's written instructions and to comply with details shown.

C. Provide panel profile, including major ribs and intermediate stiffening ribs, if any, for full length of panel.

D. Fabricate metal panel joints with factory-installed captive gaskets or separator strips that provide a weathertight seal and prevent metal-to-metal contact, and that minimize noise from movements.

E. Sheet Metal Flashing and Trim: Fabricate flashing and trim to comply with manufacturer's recommendations and recommendations in SMACNA's "Architectural Sheet Metal Manual" that apply to design, dimensions, metal, and other characteristics of item indicated.

1. Form exposed sheet metal accessories that are without excessive oil canning, buckling, and tool marks and that are true to line and levels indicated, with exposed edges folded back to form hems.
2. Seams for Other Than Aluminum: Fabricate nonmoving seams in accessories with flat-lock seams. Tin edges to be seamed, form seams, and solder.
3. Sealed Joints: Form nonexpansion, but movable, joints in metal to accommodate sealant and to comply with SMACNA standards.
4. Conceal fasteners and expansion provisions where possible. Exposed fasteners are not allowed on faces of accessories exposed to view.

5. Fabricate cleats and attachment devices from same material as accessory being anchored or from compatible, noncorrosive metal recommended in writing by metal panel manufacturer.

    a. Size: As recommended by SMACNA's "Architectural Sheet Metal Manual" or metal panel manufacturer for application, but not less than thickness of metal being secured.

2.6 FINISHES

A. Protect mechanical and painted finishes on exposed surfaces from damage by applying a strippable, temporary protective covering before shipping.

B. Appearance of Finished Work: Variations in appearance of abutting or adjacent pieces are acceptable if they are within one-half of the range of approved Samples. Noticeable variations in same piece are unacceptable. Variations in appearance of other components are acceptable if they are within the range of approved Samples and are assembled or installed to minimize contrast.

C. Steel Panels and Accessories:

1. Two-Coat Fluoropolymer: AAMA 621. Fluoropolymer finish containing not less than 70 percent PVDF resin by weight in color coat. Prepare, pretreat, and apply coating to exposed metal surfaces to comply with coating and resin manufacturers' written instructions.
2. Concealed Finish: Apply pretreatment and manufacturer's standard white or light-colored acrylic or polyester backer finish consisting of prime coat and wash coat with a minimum total dry film thickness of 0.5 mil (0.013 mm).

PART 3 - EXECUTION

3.1 EXAMINATION

A. Examine substrates, areas, and conditions, with Installer present, for compliance with requirements for installation tolerances, metal panel supports, and other conditions affecting performance of the Work.

1. Examine primary and secondary roof framing to verify that rafters, purlins, angles, channels, and other structural panel support members and anchorages have been installed within alignment tolerances required by metal roof panel manufacturer.
2. Examine solid roof sheathing to verify that sheathing joints are supported by framing or blocking and that installation is within flatness tolerances required by metal roof panel manufacturer.

    a. Verify that air- or water-resistive barriers have been installed over sheathing or backing substrate to prevent air infiltration or water penetration.

B. Examine roughing-in for components and systems penetrating metal panels to verify actual locations of penetrations relative to seam locations of metal panels before installation.

C. Proceed with installation only after unsatisfactory conditions have been corrected.

3.2 PREPARATION

A. Miscellaneous Supports: Install subframing, furring, and other miscellaneous panel support members and anchorages according to ASTM C 754 and metal panel manufacturer's written recommendations.

3.3 UNDERLAYMENT INSTALLATION

A. Self-Adhering Sheet Underlayment: Apply primer if required by manufacturer. Comply with temperature restrictions of underlayment manufacturer for installation. Apply at locations indicated below, wrinkle free, in shingle fashion to shed water, and with end laps of not less than 6 inches (152 mm) staggered 24 inches (610 mm) between courses. Overlap side edges not less than 3-1/2 inches (90 mm). Roll laps with roller. Cover underlayment within 14 days.

1. Apply over the entire roof surface.

B. Slip Sheet: Apply slip sheet over underlayment before installing metal roof panels.

C. Flashings: Install flashings to cover underlayment to comply with requirements specified in Section 076200 "Sheet Metal Flashing and Trim."

3.4 METAL PANEL INSTALLATION

A. General: Install metal panels according to manufacturer's written instructions in orientation, sizes, and locations indicated. Install panels perpendicular to supports unless otherwise indicated. Anchor metal panels and other components of the Work securely in place, with provisions for thermal and structural movement.

1. Shim or otherwise plumb substrates receiving metal panels.
2. Flash and seal metal panels at perimeter of all openings. Fasten with self-tapping screws. Do not begin installation until air- or water-resistive barriers and flashings that will be concealed by metal panels are installed.
3. Install screw fasteners in predrilled holes.
4. Locate and space fastenings in uniform vertical and horizontal alignment.
5. Install flashing and trim as metal panel work proceeds.
6. Locate panel splices over, but not attached to, structural supports. Stagger panel splices and end laps to avoid a four-panel lap splice condition.
7. Align bottoms of metal panels and fasten with blind rivets, bolts, or self-tapping screws. Fasten flashings and trim around openings and similar elements with self-tapping screws.
8. Provide weathertight escutcheons for pipe- and conduit-penetrating panels.

B. Fasteners:

1. Steel Panels: Use stainless-steel fasteners for surfaces exposed to the exterior; use galvanized-steel fasteners for surfaces exposed to the interior.

C. Anchor Clips: Anchor metal roof panels and other components of the Work securely in place, using manufacturer's approved fasteners according to manufacturers' written instructions.

D. Metal Protection: Where dissimilar metals contact each other or corrosive substrates, protect against galvanic action as recommended in writing by metal panel manufacturer.

E. Standing-Seam Metal Roof Panel Installation: Fasten metal roof panels to supports with concealed clips at each standing-seam joint at location, spacing, and with fasteners recommended in writing by manufacturer.

1. Install clips to supports with self-tapping fasteners.
2. Install pressure plates at locations indicated in manufacturer's written installation instructions.
3. Snap Joint: Nest standing seams and fasten together by interlocking and completely engaging factory-applied sealant.

4. Seamed Joint: Crimp standing seams with manufacturer-approved, motorized seamer tool so clip, metal roof panel, and factory-applied sealant are completely engaged.
5. Watertight Installation:

    a. Apply a continuous ribbon of sealant or tape to seal joints of metal panels, using sealant or tape as recommend in writing by manufacturer as needed to make panels watertight.
    b. Provide sealant or tape between panels and protruding equipment, vents, and accessories.
    c. At panel splices, nest panels with minimum 6-inch (152-mm) end lap, sealed with sealant and fastened together by interlocking clamping plates.

F. Accessory Installation: Install accessories with positive anchorage to building and weathertight mounting, and provide for thermal expansion. Coordinate installation with flashings and other components.

1. Install components required for a complete metal panel system including trim, copings, corners, seam covers, flashings, sealants, gaskets, fillers, closure strips, and similar items. Provide types indicated by metal roof panel manufacturers; or, if not indicated, types recommended by metal roof panel manufacturer.

G. Flashing and Trim: Comply with performance requirements, manufacturer's written installation instructions, and SMACNA's "Architectural Sheet Metal Manual." Provide concealed fasteners where possible, and set units true to line and level as indicated. Install work with laps, joints, and seams that will be permanently watertight and weather resistant.

1. Install exposed flashing and trim that is without buckling and tool marks, and that is true to line and levels indicated, with exposed edges folded back to form hems. Install sheet metal flashing and trim to fit substrates and achieve waterproof and weather-resistant performance.
2. Expansion Provisions: Provide for thermal expansion of exposed flashing and trim. Space movement joints at a maximum of 10 feet (3 m) with no joints allowed within 24 inches (610 mm) of corner or intersection. Where lapped expansion provisions cannot be used or would not be sufficiently weather resistant and waterproof, form expansion joints of intermeshing hooked flanges, not less than 1 inch (25 mm) deep, filled with mastic sealant (concealed within joints).

H. Gutters: Join sections with riveted and soldered or lapped and sealed joints. Attach gutters to eave with gutter hangers spaced not more than 36 inches (914 mm) o.c. using manufacturer's standard fasteners. Provide end closures and seal watertight with sealant. Provide for thermal expansion.

I. Downspouts: Join sections with telescoping joints. Provide fasteners designed to hold downspouts securely 1 inch (25 mm) away from walls; locate fasteners at top and bottom and at approximately 60 inches (1524 mm) o.c. in between.

1. Provide elbows at base of downspouts to direct water away from building.
2. Connect downspouts to underground drainage system indicated.

J. Roof Curbs: Install flashing around bases where they meet metal roof panels.

K. Pipe Flashing: Form flashing around pipe penetration and metal roof panels. Fasten and seal to metal roof panels as recommended by manufacturer.

3.5 ERECTION TOLERANCES

A. Installation Tolerances: Shim and align metal panel units within installed tolerance of 1/4 inch in 20 feet (6 mm in 6 m) on slope and location lines as indicated and within 1/8-inch (3-mm) offset of adjoining faces and of alignment of matching profiles.

3.6 FIELD QUALITY CONTROL

A. Manufacturer's Field Service: Engage a factory-authorized service representative to test and inspect metal roof panel installation, including accessories. Report results in writing.

B. Remove and replace applications of metal roof panels where tests and inspections indicate that they do not comply with specified requirements.

C. Additional tests and inspections, at Contractor's expense, are performed to determine compliance of replaced or additional work with specified requirements.

D. Prepare test and inspection reports.

3.7 CLEANING AND PROTECTION

A. Remove temporary protective coverings and strippable films, if any, as metal panels are installed, unless otherwise indicated in manufacturer's written installation instructions. On completion of metal panel installation, clean finished surfaces as recommended by metal panel manufacturer. Maintain in a clean condition during construction.

B. Replace metal panels that have been damaged or have deteriorated beyond successful repair by finish touchup or similar minor repair procedures.

END OF SECTION 074113.16

SECTION 074213.13 - FORMED METAL WALL PANELS

PART 1 - GENERAL

1.1 RELATED DOCUMENTS

A. Drawings and general provisions of the Contract, including General and Supplementary Conditions and Division 01 Specification Sections, apply to this Section.

1.2 SUMMARY

A. Section Includes:

1. Concealed-fastener, lap-seam metal wall panels.

B. Related Sections:

1. Section 074293 "Soffit Panels" for metal panels used in horizontal soffit applications.

1.3 PREINSTALLATION MEETINGS

A. Preinstallation Conference: Conduct conference at Project site.

1. Meet with metal panel Installer, metal panel manufacturer's representative, structural-support Installer, and installers whose work interfaces with or affects metal panels, including installers of doors, windows, and louvers.
2. Review and finalize construction schedule and verify availability of materials, Installer's personnel, equipment, and facilities needed to make progress and avoid delays.
3. Review methods and procedures related to metal panel installation, including manufacturer's written instructions.
4. Examine support conditions for compliance with requirements, including alignment between and attachment to structural members.
5. Review flashings, special siding details, wall penetrations, openings, and condition of other construction that affect metal panels.
6. Review governing regulations and requirements for insurance, certificates, and tests and inspections if applicable.
7. Review temporary protection requirements for metal panel assembly during and after installation.
8. Review of procedures for repair of metal panels damaged after installation.
9. Document proceedings, including corrective measures and actions required, and furnish copy of record to each participant.

1.4 ACTION SUBMITTALS

A. Product Data: For each type of product.

1. Include construction details, material descriptions, dimensions of individual components and profiles, and finishes for each type of panel and accessory.

B. Shop Drawings:

1. Include fabrication and installation layouts of metal panels; details of edge conditions, joints, panel profiles, corners, anchorages, attachment system, trim, flashings, closures, and accessories; and special details.
2. Accessories: Include details of the flashing, trim, and anchorage systems, at a scale of not less than 1-1/2 inches per 12 inches (1:10).

C. Samples for Initial Selection: For each type of metal panel indicated with factory-applied finishes.

1. Include Samples of trim and accessories involving color selection.

D. Samples for Verification: For each type of exposed finish, prepared on Samples of size indicated below:

1. Metal Panels: 12 inches (305 mm) long by actual panel width. Include fasteners, closures, and other metal panel accessories.

1.5 INFORMATIONAL SUBMITTALS

A. Qualification Data: For Installer.

B. Field quality-control reports.

1.6 CLOSEOUT SUBMITTALS

A. Maintenance Data: For metal panels to include in maintenance manuals.

1.7 QUALITY ASSURANCE

A. Installer Qualifications: An entity that employs installers and supervisors who are trained and approved by manufacturer.

B. UL-Certified, Portable Roll-Forming Equipment: UL-certified, portable roll-forming equipment capable of producing metal panels warranted by manufacturer to be the same as factory-formed products. Maintain UL certification of portable roll-forming equipment for duration of work.

1.8 DELIVERY, STORAGE, AND HANDLING

A. Deliver components, metal panels, and other manufactured items so as not to be damaged or deformed. Package metal panels for protection during transportation and handling.

B. Unload, store, and erect metal panels in a manner to prevent bending, warping, twisting, and surface damage.

C. Stack metal panels horizontally on platforms or pallets, covered with suitable weathertight and ventilated covering. Store metal panels to ensure dryness, with positive slope for drainage of water. Do not store metal panels in contact with other materials that might cause staining, denting, or other surface damage.

D. Retain strippable protective covering on metal panels during installation.

1.9 FIELD CONDITIONS

A. Weather Limitations: Proceed with installation only when existing and forecasted weather conditions permit assembly of metal panels to be performed according to manufacturers' written instructions and warranty requirements.

1.10 COORDINATION

A. Coordinate metal panel installation with rain drainage work, flashing, trim, construction of soffits, and other adjoining work to provide a leakproof, secure, and noncorrosive installation.

1.11 WARRANTY

A. Special Warranty: Manufacturer's standard form in which manufacturer agrees to repair or replace components of metal panel systems that fail in materials or workmanship within specified warranty period.

1. Failures include, but are not limited to, the following:

a. Structural failures including rupturing, cracking, or puncturing.
b. Deterioration of metals and other materials beyond normal weathering.

2. Warranty Period: Two years from date of Substantial Completion.

B. Special Warranty on Panel Finishes: Manufacturer's standard form in which manufacturer agrees to repair finish or replace metal panels that show evidence of deterioration of factory-applied finishes within specified warranty period.

1. Exposed Panel Finish: Deterioration includes, but is not limited to, the following:

a. Color fading more than 5 Hunter units when tested according to ASTM D 2244.
b. Chalking in excess of a No. 8 rating when tested according to ASTM D 4214.
c. Cracking, checking, peeling, or failure of paint to adhere to bare metal.

2. Finish Warranty Period: 20 years from date of Substantial Completion.

PART 2 - PRODUCTS

2.1 PERFORMANCE REQUIREMENTS

A. Structural Performance: Provide metal panel systems capable of withstanding the effects of the following loads, based on testing according to ASTM E 1592:

1. Wind Loads: As indicated on Drawings.
2. Other Design Loads: As indicated on Drawings.
3. Deflection Limits: For wind loads, no greater than 1/180 of the span.

B. Air Infiltration: Air leakage of not more than 0.06 cfm/sq. ft. (0.3 L/s per sq. m) when tested according to ASTM E 283 at the following test-pressure difference:

1. Test-Pressure Difference: 1.57 lbf/sq. ft. (75 Pa).

C. Water Penetration under Static Pressure: No water penetration when tested according to ASTM E 331 at the following test-pressure difference:

1. Test-Pressure Difference: 2.86 lbf/sq. ft. (137 Pa).

D. Thermal Movements: Allow for thermal movements from ambient and surface temperature changes by preventing buckling, opening of joints, overstressing of components, failure of joint sealants, failure of connections, and other detrimental effects. Base calculations on surface temperatures of materials due to both solar heat gain and nighttime-sky heat loss.

1. Temperature Change (Range): 120 deg F (67 deg C), ambient; 180 deg F (100 deg C), material surfaces.

E. Fire-Resistance Ratings: Comply with ASTM E 119; testing by a qualified testing agency. Identify products with appropriate markings of applicable testing agency.

1. Indicate design designations from UL's "Fire Resistance Directory" or from the listings of another qualified testing agency.

2.2 CONCEALED-FASTENER, LAP-SEAM METAL WALL PANELS

A. General: Provide factory-formed metal panels designed to be field assembled by lapping and interconnecting side edges of adjacent panels and mechanically attaching through panel to supports using concealed fasteners in side laps. Include accessories required for weathertight installation.

B. Flush-Profile, Concealed-Fastener Metal Wall Panels (**MWP**): Formed with vertical panel edges and a flat pan between panel edges; with flush joint between panels.

1. Basis-of-Design: Subject to compliance with requirements, provide Tremco; TremLock Flush Panel wall system, or a comparable product by one of the following:

   a. ATAS International, Inc.
   b. Centria Architectural Systems.
   c. Drexel Metals, Inc.
   d. Garland Company, Inc. (The).
   e. Merchant & Evans, Inc.
   f. Morin - A Kingspan Group Company.
   g. PAC-CLAD; Petersen Aluminum Corporation.

2. Metallic-Coated Steel Sheet: Zinc-coated (galvanized) steel sheet complying with ASTM A 653/A 653M, G90 (Z275) coating designation, or aluminum-zinc alloy-coated steel sheet complying with ASTM A 792/A 792M, Class AZ50 (Class AZM150) coating designation; structural quality. Prepainted by the coil-coating process to comply with ASTM A 755/A 755M.

   a. Nominal Thickness: 0.028 inch (0.71 mm).
   b. Exterior Finish: Two-coat fluoropolymer.
   c. Color: As selected by Architect from manufacturer's full range.

3. Panel Coverage: 12 inches (305 mm).
4. Panel Height: 1.0 inch (25 mm).

2.3 MISCELLANEOUS MATERIALS

A. Miscellaneous Metal Subframing and Furring: ASTM C 645, cold-formed, metallic-coated steel sheet, ASTM A 653/A 653M, G90 (Z275 hot-dip galvanized) coating designation or ASTM A 792/A 792M, Class AZ50 (Class AZM150) aluminum-zinc-alloy coating designation unless otherwise indicated. Provide manufacturer's standard sections as required for support and alignment of metal panel system.

B. Panel Accessories: Provide components required for a complete, weathertight panel system including trim, copings, fasciae, mullions, sills, corner units, clips, flashings, sealants, gaskets, fillers, closure strips, and similar items. Match material and finish of metal panels unless otherwise indicated.

1. Closures: Provide closures at eaves and rakes, fabricated of same metal as metal panels.
2. Backing Plates: Provide metal backing plates at panel end splices, fabricated from material recommended by manufacturer.
3. Closure Strips: Closed-cell, expanded, cellular, rubber or crosslinked, polyolefin-foam or closed-cell laminated polyethylene; minimum 1-inch- (25-mm-) thick, flexible closure strips; cut or premolded to match metal panel profile. Provide closure strips where indicated or necessary to ensure weathertight construction.

C. Flashing and Trim: Provide flashing and trim formed from same material as metal panels as required to seal against weather and to provide finished appearance. Locations include, but are not limited to, bases, drips, sills, jambs, corners, endwalls, framed openings, rakes, fasciae, parapet caps, soffits, reveals, and fillers. Finish flashing and trim with same finish system as adjacent metal panels.

D. Panel Fasteners: Self-tapping screws designed to withstand design loads. Provide exposed fasteners with heads matching color of metal panels by means of plastic caps or factory-applied coating. Provide EPDM or PVC sealing washers for exposed fasteners.

E. Panel Sealants: Provide sealant type recommended by manufacturer that are compatible with panel materials, are nonstaining, and do not damage panel finish.

1. Sealant Tape: Pressure-sensitive, 100 percent solids, gray polyisobutylene compound sealant tape with release-paper backing. Provide permanently elastic, nonsag, nontoxic, nonstaining tape 1/2 inch (13 mm) wide and 1/8 inch (3 mm) thick.
2. Joint Sealant: ASTM C 920; elastomeric polyurethane or silicone sealant; of type, grade, class, and use classifications required to seal joints in metal panels and remain weathertight; and as recommended in writing by metal panel manufacturer.
3. Butyl-Rubber-Based, Solvent-Release Sealant: ASTM C 1311.

2.4 FABRICATION

A. General: Fabricate and finish metal panels and accessories at the factory, by manufacturer's standard procedures and processes, as necessary to fulfill indicated performance requirements demonstrated by laboratory testing. Comply with indicated profiles and with dimensional and structural requirements.

B. On-Site Fabrication: Subject to compliance with requirements of this Section, metal panels may be fabricated on-site using UL-certified, portable roll-forming equipment if panels are of same profile and warranted by manufacturer to be equal to factory-formed panels. Fabricate according to equipment manufacturer's written instructions and to comply with details shown.

C. Provide panel profile, including major ribs and intermediate stiffening ribs, if any, for full length of panel.

D. Fabricate metal panel joints with factory-installed captive gaskets or separator strips that provide a weathertight seal and prevent metal-to-metal contact, and that minimize noise from movements.

E. Sheet Metal Flashing and Trim: Fabricate flashing and trim to comply with manufacturer's recommendations and recommendations in SMACNA's "Architectural Sheet Metal Manual" that apply to design, dimensions, metal, and other characteristics of item indicated.

1. Form exposed sheet metal accessories that are without excessive oil canning, buckling, and tool marks and that are true to line and levels indicated, with exposed edges folded back to form hems.
2. Seams for Other Than Aluminum: Fabricate nonmoving seams in accessories with flat-lock seams. Tin edges to be seamed, form seams, and solder.
3. Sealed Joints: Form nonexpansion, but movable, joints in metal to accommodate sealant and to comply with SMACNA standards.
4. Conceal fasteners and expansion provisions where possible. Exposed fasteners are not allowed on faces of accessories exposed to view.
5. Fabricate cleats and attachment devices from same material as accessory being anchored or from compatible, noncorrosive metal recommended in writing by metal panel manufacturer.

    a. Size: As recommended by SMACNA's "Architectural Sheet Metal Manual" or metal wall panel manufacturer for application but not less than thickness of metal being secured.

2.5 FINISHES

A. Protect mechanical and painted finishes on exposed surfaces from damage by applying a strippable, temporary protective covering before shipping.

B. Appearance of Finished Work: Variations in appearance of abutting or adjacent pieces are acceptable if they are within one-half of the range of approved Samples. Noticeable variations in same piece are not acceptable. Variations in appearance of other components are acceptable if they are within the range of approved Samples and are assembled or installed to minimize contrast.

C. Steel Panels and Accessories:

1. Two-Coat Fluoropolymer: AAMA 621. Fluoropolymer finish containing not less than 70 percent PVDF resin by weight in color coat. Prepare, pretreat, and apply coating to exposed metal surfaces to comply with coating and resin manufacturers' written instructions.
2. Concealed Finish: Apply pretreatment and manufacturer's standard white or light-colored acrylic or polyester backer finish consisting of prime coat and wash coat with a minimum total dry film thickness of 0.5 mil (0.013 mm).

PART 3 - EXECUTION

3.1 EXAMINATION

A. Examine substrates, areas, and conditions, with Installer present, for compliance with requirements for installation tolerances, metal panel supports, and other conditions affecting performance of the Work.

1. Examine wall framing to verify that girts, angles, channels, studs, and other structural panel support members and anchorage have been installed within alignment tolerances required by metal wall panel manufacturer.
2. Examine wall sheathing to verify that sheathing joints are supported by framing or blocking and that installation is within flatness tolerances required by metal wall panel manufacturer.

    a. Verify that air- or water-resistive barriers have been installed over sheathing or backing substrate to prevent air infiltration or water penetration.

B. Examine roughing-in for components and systems penetrating metal panels to verify actual locations of penetrations relative to seam locations of metal panels before installation.

C. Proceed with installation only after unsatisfactory conditions have been corrected.

3.2 PREPARATION

A. Miscellaneous Supports: Install subframing, furring, and other miscellaneous panel support members and anchorages according to ASTM C 754 and metal panel manufacturer's written recommendations.

3.3 METAL PANEL INSTALLATION

A. General: Install metal panels according to manufacturer's written instructions in orientation, sizes, and locations indicated. Install panels perpendicular to supports unless otherwise indicated. Anchor metal panels and other components of the Work securely in place, with provisions for thermal and structural movement.

1. Shim or otherwise plumb substrates receiving metal panels.
2. Flash and seal metal panels at perimeter of all openings. Fasten with self-tapping screws. Do not begin installation until air- or water-resistive barriers and flashings that will be concealed by metal panels are installed.
3. Install screw fasteners in predrilled holes.
4. Locate and space fastenings in uniform vertical and horizontal alignment.
5. Install flashing and trim as metal panel work proceeds.
6. Locate panel splices over, but not attached to, structural supports. Stagger panel splices and end laps to avoid a four-panel lap splice condition.
7. Align bottoms of metal panels and fasten with blind rivets, bolts, or self-tapping screws. Fasten flashings and trim around openings and similar elements with self-tapping screws.
8. Provide weathertight escutcheons for pipe- and conduit-penetrating panels.

B. Fasteners:

1. Steel Panels: Use stainless-steel fasteners for surfaces exposed to the exterior; use galvanized-steel fasteners for surfaces exposed to the interior.

C. Metal Protection: Where dissimilar metals contact each other or corrosive substrates, protect against galvanic action as recommended in writing by metal panel manufacturer.

D. Lap-Seam Metal Panels: Fasten metal panels to supports with fasteners at each lapped joint at location and spacing recommended by manufacturer.

1. Lap ribbed or fluted sheets one full rib. Apply panels and associated items true to line for neat and weathertight enclosure.
2. Provide metal-backed washers under heads of exposed fasteners bearing on weather side of metal panels.
3. Locate and space exposed fasteners in uniform vertical and horizontal alignment. Use proper tools to obtain controlled uniform compression for positive seal without rupture of washer.
4. Install screw fasteners with power tools having controlled torque adjusted to compress washer tightly without damage to washer, screw threads, or panels. Install screws in predrilled holes.
5. Flash and seal panels with weather closures at perimeter of all openings.

E. Watertight Installation:

1. Apply a continuous ribbon of sealant or tape to seal lapped joints of metal panels, using sealant or tape as recommend by manufacturer on side laps of nesting-type panels; and elsewhere as needed to make panels watertight.
2. Provide sealant or tape between panels and protruding equipment, vents, and accessories.
3. At panel splices, nest panels with minimum 6-inch (152-mm) end lap, sealed with sealant and fastened together by interlocking clamping plates.

F. Accessory Installation: Install accessories with positive anchorage to building and weathertight mounting, and provide for thermal expansion. Coordinate installation with flashings and other components.

1. Install components required for a complete metal panel system including trim, copings, corners, seam covers, flashings, sealants, gaskets, fillers, closure strips, and similar items. Provide types indicated by metal wall panel manufacturer; or, if not indicated, provide types recommended by metal panel manufacturer.

G. Flashing and Trim: Comply with performance requirements, manufacturer's written installation instructions, and SMACNA's "Architectural Sheet Metal Manual." Provide concealed fasteners where possible, and set units true to line and level as indicated. Install work with laps, joints, and seams that are permanently watertight.

1. Install exposed flashing and trim that is without buckling and tool marks, and that is true to line and levels indicated, with exposed edges folded back to form hems. Install sheet metal flashing and trim to fit substrates and achieve waterproof performance.
2. Expansion Provisions: Provide for thermal expansion of exposed flashing and trim. Space movement joints at a maximum of 10 feet (3 m) with no joints allowed within 24 inches (610 mm) of corner or intersection. Where lapped expansion provisions cannot be used or would not be sufficiently waterproof, form expansion joints of intermeshing hooked flanges, not less than 1 inch (25 mm) deep, filled with mastic sealant (concealed within joints).

3.4 FIELD QUALITY CONTROL

A. Manufacturer's Field Service: Engage a factory-authorized service representative to inspect completed metal wall panel installation, including accessories.

B. Remove and replace metal wall panels where inspections indicate that they do not comply with specified requirements.

C. Additional inspections, at Contractor's expense, are performed to determine compliance of replaced or additional work with specified requirements.

D. Prepare inspection reports.

3.5 CLEANING AND PROTECTION

A. Remove temporary protective coverings and strippable films, if any, as metal panels are installed, unless otherwise indicated in manufacturer's written installation instructions. On completion of metal panel installation, clean finished surfaces as recommended by metal panel manufacturer. Maintain in a clean condition during construction.

B. After metal panel installation, clear weep holes and drainage channels of obstructions, dirt, and sealant.

C. Replace metal panels that have been damaged or have deteriorated beyond successful repair by finish touchup or similar minor repair procedures.

END OF SECTION 074213.13

SECTION 074293 - SOFFIT PANELS

PART 1 - GENERAL

1.1 RELATED DOCUMENTS

A. Drawings and general provisions of the Contract, including General and Supplementary Conditions and Division 01 Specification Sections, apply to this Section.

1.2 SUMMARY

A. Section includes metal soffit panels.

B. Related Sections:

1. Section 074113.13 "Formed Metal Roof Panels" for lap-seam metal roof panels.
2. Section 074213.13 "Formed Metal Wall Panels" for lap-seam metal wall panels.

1.3 PREINSTALLATION MEETINGS

A. Preinstallation Conference: Conduct conference at Project site.

1.4 ACTION SUBMITTALS

A. Product Data: For each type of product.

1. Include construction details, material descriptions, dimensions of individual components and profiles, and finishes for each type of panel and accessory.

B. Shop Drawings:

1. Include fabrication and installation layouts of metal panels; details of edge conditions, joints, panel profiles, corners, anchorages, attachment system, trim, flashings, closures, and accessories; and special details.
2. Accessories: Include details of flashing, trim, and anchorage systems, at a scale of not less than 1-1/2 inches per 12 inches (1:10).

C. Samples for Initial Selection: For each type of metal panel indicated with factory-applied color finishes.

1. Include similar Samples of trim and accessories involving color selection.

D. Samples for Verification: For each type of exposed finish required, prepared on Samples of size indicated below:

1. Metal Panels: 12 inches (305 mm) long by actual panel width. Include fasteners, closures, and other metal panel accessories.

1.5 INFORMATIONAL SUBMITTALS

A. Qualification Data: For Installer.

B. Product Test Reports: For each product, tests performed by a qualified testing agency.

1.6 CLOSEOUT SUBMITTALS

A. Maintenance Data: For metal panels to include in maintenance manuals.

1.7 QUALITY ASSURANCE

A. Installer Qualifications: An entity that employs installers and supervisors who are trained and approved by manufacturer.

B. UL-Certified, Portable Roll-Forming Equipment: UL-certified, portable roll-forming equipment capable of producing metal panels warranted by manufacturer to be the same as factory-formed products. Maintain UL certification of portable roll-forming equipment for duration of work.

C. Mockups: Build mockups to verify selections made under Sample submittals and to demonstrate aesthetic effects and set quality standards for fabrication and installation.

1. Build mockup of typical roof eave, including fascia, and soffit as shown on Drawings; approximately four panels wide by full eave width, including attachments and accessories.
2. Approval of mockups does not constitute approval of deviations from the Contract Documents contained in mockups unless Architect specifically approves such deviations in writing.
3. Subject to compliance with requirements, approved mockups may become part of the completed Work if undisturbed at time of Substantial Completion.

1.8 DELIVERY, STORAGE, AND HANDLING

A. Deliver components, metal panels, and other manufactured items so as not to be damaged or deformed. Package metal panels for protection during transportation and handling.

B. Unload, store, and erect metal panels in a manner to prevent bending, warping, twisting, and surface damage.

C. Stack metal panels horizontally on platforms or pallets, covered with suitable weathertight and ventilated covering. Store metal panels to ensure dryness, with positive slope for drainage of water. Do not store metal panels in contact with other materials that might cause staining, denting, or other surface damage.

D. Retain strippable protective covering on metal panels during installation.

1.9 FIELD CONDITIONS

A. Weather Limitations: Proceed with installation only when existing and forecasted weather conditions permit assembly of metal panels to be performed according to manufacturers' written instructions and warranty requirements.

1.10 COORDINATION

A. Coordinate metal panel installation with rain drainage work, flashing, trim, construction of walls, and other adjoining work to provide a leakproof, secure, and noncorrosive installation.

1.11 WARRANTY

A. Special Warranty: Manufacturer's standard form in which manufacturer agrees to repair or replace components of metal panel systems that fail in materials or workmanship within specified warranty period.

1. Failures include, but are not limited to, the following:

a. Structural failures including rupturing, cracking, or puncturing.
b. Deterioration of metals and other materials beyond normal weathering.

2. Warranty Period: Two years from date of Substantial Completion.

B. Special Warranty on Panel Finishes: Manufacturer's standard form in which manufacturer agrees to repair finish or replace metal panels that show evidence of deterioration of factory-applied finishes within specified warranty period.

1. Exposed Panel Finish: Deterioration includes, but is not limited to, the following:

a. Color fading more than 5 Hunter units when tested according to ASTM D 2244.
b. Chalking in excess of a No. 8 rating when tested according to ASTM D 4214.
c. Cracking, checking, peeling, or failure of paint to adhere to bare metal.

2. Finish Warranty Period: 20 years from date of Substantial Completion.

PART 2 - PRODUCTS

2.1 PERFORMANCE REQUIREMENTS

A. Structural Performance: Provide metal panel systems capable of withstanding the effects of the following loads, based on testing according to ASTM E 1592:

1. Wind Loads: As indicated on Drawings.
2. Other Design Loads: As indicated on Drawings.
3. Deflection Limits: For wind loads, no greater than 1/180 of the span.

B. Air Infiltration: Air leakage of not more than 0.04 cfm/sq. ft. (0.2 L/s per sq. m) when tested according to ASTM E 283 at the following test-pressure difference:

1. Test-Pressure Difference: 1.57 lbf/sq. ft. (75 Pa).

C. Water Penetration under Static Pressure: No water penetration when tested according to ASTM E 331 at the following test-pressure difference:

1. Test-Pressure Difference: 2.86 lbf/sq. ft. (137 Pa).

D. Thermal Movements: Allow for thermal movements from ambient and surface temperature changes by preventing buckling, opening of joints, overstressing of components, failure of joint sealants, failure of connections, and other detrimental effects. Base calculations on surface temperatures of materials due to both solar heat gain and nighttime-sky heat loss.

1. Temperature Change (Range): 120 deg F (67 deg C), ambient; 180 deg F (100 deg C), material surfaces.

2.2 METAL SOFFIT PANELS

A. General: Provide metal soffit panels designed to be installed by lapping and interconnecting side edges of adjacent panels and mechanically attaching through panel to supports using concealed fasteners in side laps. Include accessories required for weathertight installation.

B. Flush-Profile Metal Soffit Panels: Solid panels formed with vertical panel edges and one intermediate stiffening rib symmetrically spaced between panel edges; with flush joint between panels.

1. Basis-of-Design Product: Subject to compliance with requirements, provide Tremco; TremLock Soffit Panel. or a comparable product by one of the following:

a. ATAS International, Inc.
b. CENTRIA Architectural Systems.
c. Drexel Metals.
d. Garland Company, Inc. (The).
e. Merchant and Evans.
f. Morin - A Kingspan Group Company.
g. PAC-CLAD; Petersen Aluminum Corporation.

2. Metallic-Coated Steel Sheet: Zinc-coated (galvanized) steel sheet complying with ASTM A 653/A 653M, G90 (Z275) coating designation, or aluminum-zinc alloy-coated steel sheet complying with ASTM A 792/A 792M, Class AZ50 (Class AZM150) coating designation; structural quality. Prepainted by the coil-coating process to comply with ASTM A 755/A 755M.

a. Nominal Thickness: 0.028 inch (0.71 mm).
b. Exterior Finish: Two-coat fluoropolymer.
c. Color: As selected by Architect from manufacturer's full range.

3. Panel Coverage: 12 inches (305 mm).
4. Panel Height: 0.375 inch (9.5 mm).

2.3 MISCELLANEOUS MATERIALS

A. Miscellaneous Metal Subframing and Furring: ASTM C 645, cold-formed, metallic-coated steel sheet, ASTM A 653/A 653M, G90 (Z275 hot-dip galvanized) coating designation or ASTM A 792/A 792M, Class AZ50 (Class AZM150) aluminum-zinc-alloy coating designation unless otherwise indicated. Provide manufacturer's standard sections as required for support and alignment of metal panel system.

B. Panel Accessories: Provide components required for a complete, weathertight panel system including trim, clips, flashings, sealants, gaskets, fillers, closure strips, and similar items. Match material and finish of metal panels unless otherwise indicated.

1. Closure Strips: Closed-cell, expanded, cellular, rubber or crosslinked, polyolefin-foam or closed-cell laminated polyethylene; minimum 1-inch- (25-mm-) thick, flexible closure strips; cut or

premolded to match metal panel profile. Provide closure strips where indicated or necessary to ensure weathertight construction.

C. Flashing and Trim: Provide flashing and trim formed from same material as metal panels as required to seal against weather and to provide finished appearance. Finish flashing and trim with same finish system as adjacent metal panels.

D. Panel Fasteners: Self-tapping screws designed to withstand design loads. Provide exposed fasteners with heads matching color of metal panels by means of plastic caps or factory-applied coating. Provide EPDM or PVC sealing washers for exposed fasteners.

E. Panel Sealants: Provide sealant types recommended by manufacturer that are compatible with panel materials, are nonstaining, and do not damage panel finish.

1. Sealant Tape: Pressure-sensitive, 100 percent solids, gray polyisobutylene compound sealant tape with release-paper backing. Provide permanently elastic, nonsag, nontoxic, nonstaining tape 1/2 inch (13 mm) wide and 1/8 inch (3 mm) thick.
2. Joint Sealant: ASTM C 920; elastomeric polyurethane or silicone sealant; of type, grade, class, and use classifications required to seal joints in metal panels and remain weathertight; and as recommended in writing by metal panel manufacturer.
3. Butyl-Rubber-Based, Solvent-Release Sealant: ASTM C 1311.

2.4 FABRICATION

A. General: Fabricate and finish metal panels and accessories at the factory, by manufacturer's standard procedures and processes, as necessary to fulfill indicated performance requirements demonstrated by laboratory testing. Comply with indicated profiles and with dimensional and structural requirements.

B. On-Site Fabrication: Subject to compliance with requirements of this Section, metal panels may be fabricated on-site using UL-certified, portable roll-forming equipment if panels are of same profile and warranted by manufacturer to be equal to factory-formed panels. Fabricate according to equipment manufacturer's written instructions and to comply with details shown.

C. Provide panel profile, including major ribs and intermediate stiffening ribs, if any, for full length of panel.

D. Fabricate metal panel joints with factory-installed captive gaskets or separator strips that provide a weathertight seal and prevent metal-to-metal contact, and that minimize noise from movements.

E. Sheet Metal Flashing and Trim: Fabricate flashing and trim to comply with manufacturer's recommendations and recommendations in SMACNA's "Architectural Sheet Metal Manual" that apply to design, dimensions, metal, and other characteristics of item indicated.

1. Form exposed sheet metal accessories that are without excessive oil canning, buckling, and tool marks and that are true to line and levels indicated, with exposed edges folded back to form hems.
2. Seams for Other Than Aluminum: Fabricate nonmoving seams in accessories with flat-lock seams. Tin edges to be seamed, form seams, and solder.
3. Sealed Joints: Form nonexpansion, but movable, joints in metal to accommodate sealant and to comply with SMACNA standards.
4. Conceal fasteners and expansion provisions where possible. Exposed fasteners are not allowed on faces of accessories exposed to view.
5. Fabricate cleats and attachment devices from same material as accessory being anchored or from compatible, noncorrosive metal recommended in writing by metal panel manufacturer.

a. Size: As recommended by SMACNA's "Architectural Sheet Metal Manual" or metal soffit panel manufacturer for application but not less than thickness of metal being secured.

2.5 FINISHES

A. Protect mechanical and painted finishes on exposed surfaces from damage by applying a strippable, temporary protective covering before shipping.

B. Appearance of Finished Work: Variations in appearance of abutting or adjacent pieces are acceptable if they are within one-half of the range of approved Samples. Noticeable variations in same piece are not acceptable. Variations in appearance of other components are acceptable if they are within the range of approved Samples and are assembled or installed to minimize contrast.

C. Steel Panels and Accessories:

1. Two-Coat Fluoropolymer: AAMA 621. Fluoropolymer finish containing not less than 70 percent PVDF resin by weight in color coat. Prepare, pretreat, and apply coating to exposed metal surfaces to comply with coating and resin manufacturers' written instructions.
2. Concealed Finish: Apply pretreatment and manufacturer's standard white or light-colored acrylic or polyester backer finish consisting of prime coat and wash coat with a minimum total dry film thickness of 0.5 mil (0.013 mm).

PART 3 - EXECUTION

3.1 EXAMINATION

A. Examine substrates, areas, and conditions, with Installer present, for compliance with requirements for installation tolerances, metal panel supports, and other conditions affecting performance of the Work.

1. Examine framing to verify that girts, angles, channels, studs, and other structural panel support members and anchorage have been installed within alignment tolerances required by metal panel manufacturer.
2. Examine sheathing to verify that sheathing joints are supported by framing or blocking and that installation is within flatness tolerances required by metal panel manufacturer.

a. Verify that air- or water-resistive barriers been installed over sheathing or backing substrate to prevent air infiltration or water penetration.

B. Examine roughing-in for components and systems penetrating metal panels to verify actual locations of penetrations relative to seam locations of metal panels before installation.

C. Proceed with installation only after unsatisfactory conditions have been corrected.

3.2 PREPARATION

A. Miscellaneous Supports: Install subframing, furring, and other miscellaneous panel support members and anchorages according to ASTM C 754 and metal panel manufacturer's written recommendations.

1. Soffit Framing: Wire tie furring channels to supports, as required to comply with requirements for assemblies indicated.

3.3 METAL PANEL INSTALLATION

A. General: Install metal panels according to manufacturer's written instructions in orientation, sizes, and locations indicated. Install panels perpendicular to supports unless otherwise indicated. Anchor metal panels and other components of the Work securely in place, with provisions for thermal and structural movement.

1. Shim or otherwise plumb substrates receiving metal panels.
2. Flash and seal metal panels at perimeter of all openings. Fasten with self-tapping screws. Do not begin installation until air- or water-resistive barriers and flashings that will be concealed by metal panels are installed.
3. Install screw fasteners in predrilled holes.
4. Locate and space fastenings in uniform vertical and horizontal alignment.
5. Install flashing and trim as metal panel work proceeds.
6. Locate panel splices over, but not attached to, structural supports. Stagger panel splices and end laps to avoid a four-panel lap splice condition.
7. Provide weathertight escutcheons for pipe- and conduit-penetrating panels.

B. Fasteners:

1. Steel Panels: Use stainless-steel fasteners for surfaces exposed to the exterior; use galvanized-steel fasteners for surfaces exposed to the interior.

C. Metal Protection: Where dissimilar metals contact each other or corrosive substrates, protect against galvanic action as recommended in writing by metal panel manufacturer.

D. Lap-Seam Metal Panels: Fasten metal panels to supports with fasteners at each lapped joint at location and spacing recommended by manufacturer.

1. Apply panels and associated items true to line for neat and weathertight enclosure.
2. Provide metal-backed washers under heads of exposed fasteners bearing on weather side of metal panels.
3. Locate and space exposed fasteners in uniform vertical and horizontal alignment. Use proper tools to obtain controlled uniform compression for positive seal without rupture of washer.
4. Install screw fasteners with power tools having controlled torque adjusted to compress washer tightly without damage to washer, screw threads, or panels. Install screws in predrilled holes.

E. Accessory Installation: Install accessories with positive anchorage to building and weathertight mounting, and provide for thermal expansion. Coordinate installation with flashings and other components.

1. Install components required for a complete metal panel system including trim, corners, seam covers, flashings, sealants, gaskets, fillers, closure strips, and similar items. Provide types indicated by metal panel manufacturer; or, if not indicated, provide types recommended by metal panel manufacturer.

F. Flashing and Trim: Comply with performance requirements, manufacturer's written installation instructions, and SMACNA's "Architectural Sheet Metal Manual." Provide concealed fasteners where possible, and set units true to line and level as indicated. Install work with laps, joints, and seams that are permanently watertight.

1. Install exposed flashing and trim that is without buckling, and tool marks, and that is true to line and levels indicated, with exposed edges folded back to form hems. Install sheet metal flashing and trim to fit substrates and to achieve waterproof performance.
2. Expansion Provisions: Provide for thermal expansion of exposed flashing and trim. Space movement joints at a maximum of 10 feet (3 m) with no joints allowed within 24 inches (610 mm)

of corner or intersection. Where lapped expansion provisions cannot be used or would not be waterproof, form expansion joints of intermeshing hooked flanges, not less than 1 inch (25 mm) deep, filled with mastic sealant (concealed within joints).

3.4 CLEANING AND PROTECTION

A. Remove temporary protective coverings and strippable films, if any, as metal panels are installed unless otherwise indicated in manufacturer's written installation instructions. On completion of metal panel installation, clean finished surfaces as recommended by metal panel manufacturer. Maintain in a clean condition during construction.

B. After metal panel installation, clear weep holes and drainage channels of obstructions, dirt, and sealant.

C. Replace metal panels that have been damaged or have deteriorated beyond successful repair by finish touchup or similar minor repair procedures.

END OF SECTION 074293

SECTION 075323 - ETHYLENE-PROPYLENE-DIENE-MONOMER (EPDM) ROOFING

PART 1 - GENERAL

1.1 RELATED DOCUMENTS

A. Drawings and general provisions of the Contract, including General and Supplementary Conditions and Division 01 Specification Sections, apply to this Section.

1.2 SUMMARY

A. Section Includes:

1. Adhered ethylene-propylene-diene-terpolymer (EPDM) roofing system.
2. Vapor retarder.
3. Roof insulation.
4. Walkways.

B. Section includes installation of sound-absorbing insulation strips in ribs of roof deck. Sound-absorbing insulation strips are furnished under Section 053100 "Steel Decking."

C. Related Requirements:

1. Section 061053 "Miscellaneous Rough Carpentry" for wood nailers, curbs, and blocking.
2. Section 072100 "Thermal Insulation" for insulation beneath the roof deck.
3. Section 076200 "Sheet Metal Flashing and Trim" for metal roof flashings and counterflashings.
4. Section 077100 "Roof Specialties" for manufactured copings and roof edge flashings.
5. Section 079200 "Joint Sealants" for joint sealants, joint fillers, and joint preparation.
6. Section 221006 "Plumbing Piping Specialties" for roof drains.

1.3 DEFINITIONS

A. Roofing Terminology: Definitions in ASTM D 1079 and glossary of NRCA's "The NRCA Roofing Manual: Membrane Roof Systems" apply to work of this Section.

1.4 PREINSTALLATION MEETINGS

A. Preliminary Roofing Conference: Before starting roof deck construction, conduct conference at Project site.

1. Meet with Owner, Architect, Owner's insurer if applicable, testing and inspecting agency representative, roofing Installer, roofing system manufacturer's representative, deck Installer, air barrier Installer, and installers whose work interfaces with or affects roofing, including installers of roof accessories and roof-mounted equipment.
2. Review methods and procedures related to roofing installation, including manufacturer's written instructions.
3. Review and finalize construction schedule, and verify availability of materials, Installer's personnel, equipment, and facilities needed to make progress and avoid delays.
4. Review deck substrate requirements for conditions and finishes, including flatness and fastening.

5. Review structural loading limitations of roof deck during and after roofing.
6. Review base flashings, special roofing details, roof drainage, roof penetrations, equipment curbs, and condition of other construction that affects roofing system.
7. Review governing regulations and requirements for insurance and certificates if applicable.
8. Review temporary protection requirements for roofing system during and after installation.
9. Review roof observation and repair procedures after roofing installation.

B. Preinstallation Roofing Conference: Conduct conference at Project site.

1. Meet with Owner, Architect, Owner's insurer if applicable, testing and inspecting agency representative, roofing Installer, roofing system manufacturer's representative, deck Installer, air barrier Installer, and installers whose work interfaces with or affects roofing, including installers of roof accessories and roof-mounted equipment.
2. Review methods and procedures related to roofing installation, including manufacturer's written instructions.
3. Review and finalize construction schedule, and verify availability of materials, Installer's personnel, equipment, and facilities needed to make progress and avoid delays.
4. Examine deck substrate conditions and finishes, including flatness and fastening.
5. Review structural loading limitations of roof deck during and after roofing.
6. Review base flashings, special roofing details, roof drainage, roof penetrations, equipment curbs, and condition of other construction that affects roofing system.
7. Review governing regulations and requirements for insurance and certificates if applicable.
8. Review temporary protection requirements for roofing system during and after installation.
9. Review roof observation and repair procedures after roofing installation.

1.5 ACTION SUBMITTALS

A. Product Data: For each type of product.

1. For insulation and roof system component fasteners, include copy of FM Approvals' RoofNav listing.

B. Shop Drawings: Include roof plans, sections, details, and attachments to other work, including the following:

1. Layout and thickness if insulation.
2. Base flashings and membrane terminations.
3. Flashing details at penetrations.
4. Tapered insulation, thickness, and slopes.
5. Insulation fastening patterns for corner, perimeter, and field-of-roof locations.
6. Tie-in with air barrier.

C. Samples for Verification: For the following products:

1. Roof membrane and flashings of color required.
2. Walkway pads or rolls, of color required.

D. Wind Uplift Resistance Submittal: For roofing system, indicating compliance with wind uplift performance requirements.

1.6 INFORMATIONAL SUBMITTALS

A. Qualification Data: For Installer and manufacturer.

B. Manufacturer Certificates:

1. Performance Requirement Certificate: Signed by roof membrane manufacturer, certifying that roofing system complies with requirements specified in "Performance Requirements" Article.

a. Submit evidence of complying with performance requirements.

2. Special Warranty Certificate: Signed by roof membrane manufacturer, certifying that all materials supplied under this Section are acceptable for special warranty.

C. Product Test Reports: For components of roof membrane and insulation, for tests performed by a qualified testing agency, indicating compliance with specified requirements.

D. Evaluation Reports: For components of roofing system, from ICC-ES.

1. Field Test Reports:

E. Field quality-control reports.

1.7 CLOSEOUT SUBMITTALS

A. Maintenance Data: For roofing system to include in maintenance manuals.

1.8 QUALITY ASSURANCE

A. Manufacturer Qualifications: A qualified manufacturer that is UL listed for roofing system identical to that used for this Project.

B. Installer Qualifications: A qualified firm that is approved, authorized, or licensed by roofing system manufacturer to install manufacturer's product and that is eligible to receive manufacturer's special warranty.

1.9 DELIVERY, STORAGE, AND HANDLING

A. Deliver roofing materials to Project site in original containers with seals unbroken and labeled with manufacturer's name, product brand name and type, date of manufacture, approval or listing agency markings, and directions for storing and mixing with other components.

B. Store liquid materials in their original undamaged containers in a clean, dry, protected location and within the temperature range required by roofing system manufacturer. Protect stored liquid material from direct sunlight.

1. Discard and legally dispose of liquid material that cannot be applied within its stated shelf life.

C. Protect roof insulation materials from physical damage and from deterioration by sunlight, moisture, soiling, and other sources. Store in a dry location. Comply with insulation manufacturer's written instructions for handling, storing, and protecting during installation.

D. Handle and store roofing materials, and place equipment in a manner to avoid permanent deflection of deck.

1.10 FIELD CONDITIONS

A. Weather Limitations: Proceed with installation only when existing and forecasted weather conditions permit roofing system to be installed according to manufacturer's written instructions and warranty requirements.

1.11 WARRANTY

A. Special Warranty: Manufacturer agrees to repair or replace components of roofing system that fail in materials or workmanship within specified warranty period.

1. Special warranty includes roof membrane, base flashings, roof insulation, fasteners, cover boards, and other components of roofing system.
2. Warranty Period: 20 years from Date of Substantial Completion.

B. Special Project Warranty: Submit roofing Installer's warranty, on warranty form at end of this Section, signed by Installer, covering the Work of this Section, including all components of roofing system such as roof membrane, base flashing, roof insulation, fasteners, cover boards, vapor retarders, and walkway products, for the following warranty period:

1. Warranty Period: Two years from Date of Substantial Completion.

PART 2 - PRODUCTS

2.1 PERFORMANCE REQUIREMENTS

A. General Performance: Installed roofing system and base flashings shall withstand specified uplift pressures, thermally induced movement, and exposure to weather without failure due to defective manufacture, fabrication, installation, or other defects in construction. Roofing and flashings shall remain watertight.

1. Accelerated Weathering: Roof membrane shall withstand 2000 hours of exposure when tested according to ASTM G 152, ASTM G 154, or ASTM G 155.
2. Impact Resistance: Roof membrane shall resist impact damage when tested according to ASTM D 3746, ASTM D 4272, or the Resistance to Foot Traffic Test in FM Approvals 4470.

B. Material Compatibility: Roofing materials shall be compatible with one another and adjacent materials under conditions of service and application required, as demonstrated by roof membrane manufacturer based on testing and field experience.

C. Wind Uplift Resistance: Design roofing system to resist the following wind uplift pressures when tested according to FM Approvals 4474, UL 580, or UL 1897:

1. Zone 1 (Roof Area Field): As indicated on Drawing S100.
2. Zone 2 (Roof Area Perimeter): As indicated on Drawing S100.
3. Zone 3 (Roof Area Corners): As indicated on Drawing S100.

D. FM Approvals' RoofNav Listing: Roof membrane, base flashings, and component materials shall comply with requirements in FM Approvals 4450 or FM Approvals 4470 as part of a roofing system, and shall be listed in FM Approvals' RoofNav for Class 1 or noncombustible construction, as applicable. Identify materials with FM Approvals Certification markings.

1. Fire/Windstorm Classification: Class 1A-90.
2. Hail-Resistance Rating: MH.

E. ENERGY STAR Listing: Roofing system shall be listed on the DOE's ENERGY STAR "Roof Products Qualified Product List" for low-slope roof products.

F. Energy Performance: Roofing system shall have an initial solar reflectance of not less than 0.70 and an emissivity of not less than 0.75 when tested according to CRRC-1.

G. Exterior Fire-Test Exposure: ASTM E 108 or UL 790, Class A; for application and roof slopes indicated; testing by a qualified testing agency. Identify products with appropriate markings of applicable testing agency.

H. Fire-Resistance Ratings: Comply with fire-resistance-rated assembly designs indicated. Identify products with appropriate markings of applicable testing agency.

I. Thermal Resistance: Insulation layers shall have a combined thermal resistance of not less than R-30.

2.2 ETHYLENE-PROPYLENE-DIENE-TERPOLYMER (EPDM) ROOFING

A. EPDM Sheet: ASTM D 4637/D 4637M, Type I, nonreinforced, EPDM sheet with factory-applied seam tape.

1. Manufacturers: Subject to compliance with requirements, provide products by one of the following:

   a. Carlisle SynTec Incorporated.
   b. Firestone Building Products.
   c. GAF Materials Corporation.
   d. Johns Manville; a Berkshire Hathaway company.
   e. Versico Roofing Systems.

2. Thickness: 60 mils (1.5 mm), nominal.
3. Exposed Face Color: White on black.
4. Source Limitations: Obtain components for roofing system from roof membrane manufacturer or manufacturers approved by roof membrane manufacturer.

2.3 AUXILIARY ROOFING MATERIALS

A. General: Auxiliary materials recommended by roofing system manufacturer for intended use and compatible with other roofing components.

1. Adhesive and Sealants: Comply with VOC limits of authorities having jurisdiction.

B. Sheet Flashing: 60-mil- (1.5-mm-) thick EPDM, partially cured or cured, according to application.

C. Protection Sheet: Epichlorohydrin or neoprene nonreinforced flexible sheet, 55 to 60 mils (1.4 to 1.5 mm) thick, recommended by EPDM manufacturer for resistance to hydrocarbons, non-aromatic solvents, grease, and oil.

1. Location: Minimum 48” around kitchen exhaust fans and makeup air unit.

D. Prefabricated Pipe Flashings: As recommended by roof membrane manufacturer.

E. Bonding Adhesive: Manufacturer's standard, water based.

F. Seaming Material: Factory-applied seam tape, width as recommended by manufacturer.

G. Metal Termination Bars: Manufacturer's standard, predrilled stainless steel or aluminum bars, approximately 1 by 1/8 inch (25 by 3 mm) thick; with anchors.

H. Fasteners: Factory-coated steel fasteners and metal or plastic plates complying with corrosion-resistance provisions in FM Approvals 4470, designed for fastening components to substrate, and acceptable to roofing system manufacturer.

I. Miscellaneous Accessories: Provide pourable sealers, preformed cone and vent sheet flashings, molded pipe boot flashings, preformed inside and outside corner sheet flashings, reinforced EPDM securement strips, T-joint covers, in-seam sealants, termination reglets, cover strips, and other accessories.

1. Provide white flashing accessories for white EPDM membrane roofing.

2.4 VAPOR RETARDER

A. Self-Adhering-Sheet Vapor Retarder: Aluminum foil laminated to layer of self-adhesive SBS backing, minimum 15-mil- (0.38-mm-) total thickness; maximum permeance rating of 0.05 perm (3 ng/Pa x s x sq. m); cold applied, with slip-resisting surface and poly release film backing, designed for direct application over metal decks prior to installation of insulation.

1. Basis-of-Design: Subject to compliance with requirements provide Carlisle; VapAir Seal MD Air and Vapor Barrier, or other product approved in writing by roofing manufacturer.

B. Accessories: Provide flashing, primer, and other accessories recommended by manufacturer.

2.5 ROOF INSULATION

A. General: Preformed roof insulation boards manufactured or approved by EPDM roof membrane manufacturer, approved for use in FM Approvals' RoofNav-listed roof assemblies.

B. Polyisocyanurate Board Insulation: ASTM C 1289, Type II, Class 2, Grade 2, felt or glass-fiber mat facer on both major surfaces.

1. Manufacturers: Subject to compliance with requirements, provide products by one of the following:

   a. Atlas Roofing Corporation.
   b. Carlisle SynTec Incorporated.
   c. Firestone Building Products.
   d. GAF.
   e. Hunter Panels.
   f. Johns Manville; a Berkshire Hathaway company.
   g. Other manufacturer approved in writing by roofing manufacturer.

2. Compressive Strength: 20 psi (138 kPa).
3. Size: 48 by 96 inches (1219 by 2438 mm).
4. Thickness:

   a. Base Layer: 3 inches (76 mm).

C. Composite Polyisocyanurate Board Insulation: ASTM C 1289 Type II, Class 4, Grade 1, with factory-applied facing board on one major surface, as indicated below by type, and felt or glass-fiber mat facer on the other.

1. Manufacturers: Subject to compliance with requirements, provide products by one of the following:

   a. Atlas Roofing Corporation.
   b. Carlisle.
   c. Firestone Building Products.
   d. GAF.
   e. Hunter Panels.
   f. Johns Manville; a Berkshire Hathaway company.
   g. Other manufacturer approved in writing by roofing manufacturer.

1. Facer: High-density polyisocyanurate with glass-fiber mat facer, Grade 2, 1/2 inch (13 mm) thick.
2. Size: 48 by 96 inches (1219 by 2438 mm).
3. Thickness: 2-1/2 inches (64 mm).

D. Tapered Insulation: Provide factory-tapered insulation boards.

1. Material: Match roof insulation.
2. Minimum Thickness: 1/4 inch (6.35 mm).
3. Slope:

   a. Roof Field: 1/4 inch per foot (1:48) unless otherwise indicated on Drawings.
   b. Saddles and Crickets: 1/2 inch per foot (1:24) unless otherwise indicated on Drawings.

2.6 INSULATION ACCESSORIES

A. General: Roof insulation accessories recommended by insulation manufacturer for intended use and compatibility with other roofing system components.

B. Fasteners: Factory-coated steel fasteners and metal or plastic plates complying with corrosion-resistance provisions in FM Approvals 4470, designed for fastening roof insulation to substrate, and acceptable to roofing system manufacturer.

C. Insulation Adhesive: Insulation manufacturer's recommended adhesive formulated to attach roof insulation to substrate or to another insulation layer as follows:

1. Bead-applied, low-rise, one-component or multicomponent urethane adhesive.
2. Full-spread, spray-applied, low-rise, two-component urethane adhesive.

2.7 WALKWAYS

A. Flexible Walkways: Factory-formed, nonporous, heavy-duty, slip-resisting, surface-textured walkway pads or rolls, approximately 3/16 inch (5 mm) thick and acceptable to roofing system manufacturer.

1. Size: Approximately 36 by 60 inches (914 by 1524 mm).
2. Color: Contrasting with roof membrane.

PART 3 - EXECUTION

3.1 EXAMINATION

A. Examine substrates, areas, and conditions, with Installer present, for compliance with requirements and other conditions affecting performance of the Work.

1. Verify that roof openings and penetrations are in place, curbs are set and braced, and roof-drain bodies are securely clamped in place.
2. Verify that wood blocking, curbs, and nailers are securely anchored to roof deck at penetrations and terminations and that nailers match thicknesses of insulation.
3. Verify that surface plane flatness and fastening of steel roof deck complies with requirements in Section 053100 "Steel Decking."

B. Proceed with installation only after unsatisfactory conditions have been corrected.

3.2 PREPARATION

A. Clean substrate of dust, debris, moisture, and other substances detrimental to roofing system installation according to roofing system manufacturer's written instructions. Remove sharp projections.

B. Prevent materials from entering and clogging roof drains and conductors and from spilling or migrating onto surfaces of other construction. Remove roof-drain plugs when no work is taking place or when rain is forecast.

3.3 ROOFING INSTALLATION, GENERAL

A. Install roofing system according to roofing system manufacturer's written instructions, FM Approvals' RoofNav assembly requirements, and FM Global Property Loss Prevention Data Sheet 1-29.

B. Complete terminations and base flashings and provide temporary seals to prevent water from entering completed sections of roofing system at end of workday or when rain is forecast. Remove and discard temporary seals before beginning work on adjoining roofing.

C. Install roof membrane and auxiliary materials to tie in to existing roofing to maintain weathertightness of transition.

D. Coordinate installation and transition of roofing system component serving as an air barrier with air barrier specified under Section 072736 "Sprayed Foam Air Barriers."

3.4 VAPOR RETARDER INSTALLATION

A. Self-Adhering-Sheet Vapor Retarder: Prime substrate if required by manufacturer. Install self-adhering-sheet vapor retarder over area to receive vapor retarder, side and end lapping each sheet a minimum of 3-1/2 and 6 inches (90 and 150 mm), respectively.

1. Extend vertically up parapet walls and projections to a minimum height equal to height of insulation and cover board.
2. Seal laps by rolling.

B. Completely seal vapor retarder at terminations, obstructions, and penetrations to prevent air movement into roofing system.

3.5 INSULATION INSTALLATION

A. Coordinate installing roofing system components so insulation is not exposed to precipitation or left exposed at end of workday.

B. Comply with roofing system and insulation manufacturer's written instructions for installing roof insulation.

C. Installation Over Metal Decking:

1. Install base layer of insulation with end joints staggered not less than 12 inches (305 mm) in adjacent rows and with long joints continuous at right angle to flutes of decking.

   a. Locate end joints over crests of decking.
   b. Where installing composite and noncomposite insulation in two or more layers, install noncomposite board insulation for bottom layer and intermediate layers, if applicable, and install composite board insulation for top layer.
   c. Trim insulation neatly to fit around penetrations and projections, and to fit tight to intersecting sloping roof decks.
   d. Make joints between adjacent insulation boards not more than 1/4 inch (6 mm) in width.
   e. At internal roof drains, slope insulation to create a square drain sump with each side equal to the diameter of the drain bowl plus 24 inches (610 mm).

      1) Trim insulation so that water flow is unrestricted.

   f. Fill gaps exceeding 1/4 inch (6 mm) with insulation.
   g. Cut and fit insulation within 1/4 inch (6 mm) of nailers, projections, and penetrations.
   h. Mechanically attach base layer of insulation using mechanical fasteners specifically designed and sized for fastening specified board-type roof insulation to metal decks.

      1) Fasten insulation according to requirements in FM Approvals' RoofNav for specified Windstorm Resistance Classification.
      2) Fasten insulation to resist specified uplift pressure at corners, perimeter, and field of roof.

2. Install upper layers of insulation and tapered insulation with joints of each layer offset not less than 12 inches (305 mm) from previous layer of insulation.

   a. Install with long joints continuous and with end joints staggered not less than 12 inches (305 mm) in adjacent rows.
   b. Trim insulation neatly to fit around penetrations and projections, and to fit tight to intersecting sloping roof decks.
   c. Make joints between adjacent insulation boards not more than 1/4 inch (6 mm) in width.
   d. At internal roof drains, slope insulation to create a square drain sump with each side equal to the diameter of the drain bowl plus 24 inches (610 mm).
   e. Trim insulation so that water flow is unrestricted.
   f. Fill gaps exceeding 1/4 inch (6 mm) with insulation.
   g. Cut and fit insulation within 1/4 inch (6 mm) of nailers, projections, and penetrations.
   h. Adhere each layer of insulation to substrate using adhesive according to FM Approvals' RoofNav assembly requirements and FM Global Property Loss Prevention Data Sheet 1-29 for specified Windstorm Resistance Classification, as follows:

1) Set each layer of insulation in ribbons of bead-applied insulation adhesive, firmly pressing and maintaining insulation in place.
2) Set each layer of insulation in a uniform coverage of full-spread insulation adhesive, firmly pressing and maintaining insulation in place.

3.6 ADHERED ROOFING INSTALLATION

A. Adhere roof membrane over area to receive roofing according to roofing system manufacturer's written instructions.

B. Unroll membrane roof membrane and allow to relax before installing.

C. Start installation of roofing in presence of roofing system manufacturer's technical personnel.

D. Accurately align roof membrane, and maintain uniform side and end laps of minimum dimensions required by manufacturer. Stagger end laps.

E. Bonding Adhesive: Apply to substrate and underside of roof membrane at rate required by manufacturer, and allow to partially dry before installing roof membrane. Do not apply to splice area of roof membrane.

F. In addition to adhering, mechanically fasten roof membrane securely at terminations, penetrations, and perimeters.

G. Apply roof membrane with side laps shingled with slope of roof deck where possible.

H. Factory-Applied Seam Tape Installation: Clean and prime surface to receive tape.

1. Firmly roll side and end laps of overlapping roof membrane to ensure a watertight seam installation.
2. Apply lap sealant and seal exposed edges of roofing terminations.

I. Repair tears, voids, and lapped seams in roof membrane that do not comply with requirements.

J. Spread sealant or mastic bed over deck-drain flange at roof drains, and securely seal roof membrane in place with clamping ring.

K. Adhere protection sheet over roof membrane at locations indicated.

3.7 BASE FLASHING INSTALLATION

A. Install sheet flashings and preformed flashing accessories, and adhere to substrates according to roofing system manufacturer's written instructions.

B. Apply bonding adhesive to substrate and underside of sheet flashing at required rate, and allow to partially dry. Do not apply to seam area of flashing.

C. Flash penetrations and field-formed inside and outside corners with cured or uncured sheet flashing.

D. Clean splice areas, apply splicing cement, and firmly roll side and end laps of overlapping sheets to ensure a watertight seam installation. Apply lap sealant and seal exposed edges of sheet flashing terminations.

E. Terminate and seal top of sheet flashings and mechanically anchor to substrate through termination bars.

3.8 WALKWAY INSTALLATION

A. Flexible Walkways: Install walkway products according to manufacturer's written instructions.

1. Install flexible walkways at the following locations:

   a. Perimeter of each rooftop unit.
   b. Between each rooftop unit location, creating a continuous path connecting rooftop unit locations.
   c. Between each roof hatch and each rooftop unit location or path connecting rooftop unit locations.
   d. Top and bottom of each roof access ladder.
   e. Between each roof access ladder and each rooftop unit location or path connecting rooftop unit locations.
   f. Locations indicated on Drawings.
   g. As required by roof membrane manufacturer's warranty requirements.

2. Provide 6-inch (76-mm)clearance between adjoining pads.
3. Adhere walkway products to substrate with compatible adhesive according to roofing system manufacturer's written instructions.

3.9 FIELD QUALITY CONTROL

A. Final Roof Inspection: Arrange for roofing system manufacturer's technical personnel to inspect roofing installation on completion, in presence of Architect, and to prepare inspection report.

B. Repair or remove and replace components of roofing system where inspections indicate that they do not comply with specified requirements.

C. Additional testing and inspecting, at Contractor's expense, will be performed to determine if replaced or additional work complies with specified requirements.

3.10 PROTECTING AND CLEANING

A. Protect roofing system from damage and wear during remainder of construction period. When remaining construction does not affect or endanger roofing system, inspect roofing system for deterioration and damage, describing its nature and extent in a written report, with copies to Architect and Owner.

B. Correct deficiencies in or remove roofing system that does not comply with requirements, repair substrates, and repair or reinstall roofing system to a condition free of damage and deterioration at time of Substantial Completion and according to warranty requirements.

C. Clean overspray and spillage from adjacent construction using cleaning agents and procedures recommended by manufacturer of affected construction.

3.11 ROOFING INSTALLER'S WARRANTY

A. WHEREAS _____ of _____, herein called the "Roofing Installer," has performed roofing and associated work ("work") on the following project:

1. Owner: Caesar Rodney School District.
2. Address: 7 Front Street, Wyoming, Delaware 19934.
3. Building Name/Type: _____.
4. Address: _____.
5. Area of Work: All EPDM roofing and associated work.
6. Acceptance Date: _____.
7. Warranty Period: Two years from Date of Substantial Completion.
8. Expiration Date: _____.

B. AND WHEREAS Roofing Installer has contracted (either directly with Owner or indirectly as a subcontractor) to warrant said work against leaks and faulty or defective materials and workmanship for designated Warranty Period.

C. NOW THEREFORE Roofing Installer hereby warrants, subject to terms and conditions herein set forth, that during Warranty Period Roofing Installer will, at Roofing Installer's own cost and expense, make or cause to be made such repairs to or replacements of said work as are necessary to correct faulty and defective work and as are necessary to maintain said work in a watertight condition.

D. This Warranty is made subject to the following terms and conditions:

1. Specifically excluded from this Warranty are damages to work and other parts of the building, and to building contents, caused by:

   a. lightning;
   b. peak gust wind speed exceeding 90 mph (40.2 m/s);
   c. fire;
   d. failure of roofing system substrate, including cracking, settlement, excessive deflection, deterioration, and decomposition;
   e. faulty construction of parapet walls, copings, chimneys, skylights, vents, equipment supports, and other edge conditions and penetrations of the work;
   f. vapor condensation on bottom of roofing; and
   g. activity on roofing by others, including construction contractors, maintenance personnel, other persons, and animals, whether authorized or unauthorized by Owner.

2. When work has been damaged by any of foregoing causes, Warranty shall be null and void until such damage has been repaired by Roofing Installer and until cost and expense thereof have been paid by Owner or by another responsible party so designated.
3. Roofing Installer is responsible for damage to work covered by this Warranty but is not liable for consequential damages to building or building contents resulting from leaks or faults or defects of work.
4. During Warranty Period, if Owner allows alteration of work by anyone other than Roofing Installer, including cutting, patching, and maintenance in connection with penetrations, attachment of other work, and positioning of anything on roof, this Warranty shall become null and void on date of said alterations, but only to the extent said alterations affect work covered by this Warranty. If Owner engages Roofing Installer to perform said alterations, Warranty shall not become null and void unless Roofing Installer, before starting said work, shall have notified Owner in writing, showing reasonable cause for claim, that said alterations would likely damage or deteriorate work, thereby reasonably justifying a limitation or termination of this Warranty.
5. During Warranty Period, if original use of roof is changed and it becomes used for, but was not originally specified for, a promenade, work deck, spray-cooled surface, flooded basin, or other use

or service more severe than originally specified, this Warranty shall become null and void on date of said change, but only to the extent said change affects work covered by this Warranty.

6. Owner shall promptly notify Roofing Installer of observed, known, or suspected leaks, defects, or deterioration and shall afford reasonable opportunity for Roofing Installer to inspect work and to examine evidence of such leaks, defects, or deterioration.
7. This Warranty is recognized to be the only warranty of Roofing Installer on said work and shall not operate to restrict or cut off Owner from other remedies and resources lawfully available to Owner in cases of roofing failure. Specifically, this Warranty shall not operate to relieve Roofing Installer of responsibility for performance of original work according to requirements of the Contract Documents, regardless of whether Contract was a contract directly with Owner or a subcontract with Owner's General Contractor.

E. IN WITNESS THEREOF, this instrument has been duly executed this _____ day of _____, _____.

1. Authorized Signature: _____.
2. Name: _____.
3. Title: _____.

END OF SECTION 075323

SECTION 076200 - SHEET METAL FLASHING AND TRIM

PART 1 - GENERAL

1.1 RELATED DOCUMENTS

A. Drawings and general provisions of the Contract, including General and Supplementary Conditions and Division 01 Specification Sections, apply to this Section.

1.2 SUMMARY

A. Section Includes:

1. Formed roof-drainage sheet metal fabrications.
2. Formed low-slope roof sheet metal fabrications.
3. Formed wall sheet metal fabrications.
4. Formed equipment support flashing.

B. Related Requirements:

1. Section 061053 "Miscellaneous Rough Carpentry" for wood nailers, curbs, and blocking.
2. Section 077200 "Roof Accessories" for set-on-type curbs, equipment supports, roof hatches, vents, and other manufactured roof accessory units.
3. Section 133419 "Metal Building Systems" for sheet metal flashing and trim integral with metal buildings.

1.3 COORDINATION

A. Coordinate sheet metal flashing and trim layout and seams with sizes and locations of penetrations to be flashed, and joints and seams in adjacent materials.

B. Coordinate sheet metal flashing and trim installation with adjoining roofing and wall materials, joints, and seams to provide leakproof, secure, and noncorrosive installation.

1.4 PREINSTALLATION MEETINGS

A. Preinstallation Conference: Conduct conference at Project site.

1. Review construction schedule. Verify availability of materials, Installer's personnel, equipment, and facilities needed to make progress and avoid delays.
2. Review special roof details, roof drainage, roof-penetration flashing, equipment curbs, and condition of other construction that affect sheet metal flashing and trim.
3. Review requirements for insurance and certificates if applicable.
4. Review sheet metal flashing observation and repair procedures after flashing installation.

1.5 ACTION SUBMITTALS

A. Product Data: For each type of product.

1. Include construction details, material descriptions, dimensions of individual components and profiles, and finishes for each manufactured product and accessory.

B. Shop Drawings: For sheet metal flashing and trim.

1. Include plans, elevations, sections, and attachment details.
2. Detail fabrication and installation layouts, expansion-joint locations, and keyed details. Distinguish between shop- and field-assembled work.
3. Include identification of material, thickness, weight, and finish for each item and location in Project.
4. Include details for forming, including profiles, shapes, seams, and dimensions.
5. Include details for joining, supporting, and securing, including layout and spacing of fasteners, cleats, clips, and other attachments. Include pattern of seams.
6. Include details of termination points and assemblies.
7. Include details of expansion joints and expansion-joint covers, including showing direction of expansion and contraction from fixed points.
8. Include details of roof-penetration flashing.
9. Include details of edge conditions, including eaves, ridges, valleys, rakes, crickets, and counterflashings as applicable.
10. Include details of special conditions.
11. Include details of connections to adjoining work.
12. Detail formed flashing and trim at scale of not less than 1-1/2 inches per 12 inches (1:10).

C. Samples for Initial Selection: For each type of sheet metal and accessory indicated with factory-applied finishes.

D. Samples for Verification: For each type of exposed finish.

1. Sheet Metal Flashing: 12 inches (300 mm) long by actual width of unit, including finished seam and in required profile. Include fasteners, cleats, clips, closures, and other attachments.
2. Trim, Metal Closures, Expansion Joints, Joint Intersections, and Miscellaneous Fabrications: 12 inches (300 mm) long and in required profile. Include fasteners and other exposed accessories.
3. Unit-Type Accessories and Miscellaneous Materials: Full-size Sample.
4. Anodized Aluminum Samples: Samples to show full range to be expected for each color required.

1.6 INFORMATIONAL SUBMITTALS

A. Qualification Data: For fabricator.

B. Product Certificates: For each type of coping and roof edge flashing that is SPRI ES-1 tested and FM Approvals approved.

C. Product Test Reports: For each product, for tests performed by a qualified testing agency.

D. Sample Warranty: For special warranty.

1.7 CLOSEOUT SUBMITTALS

A. Maintenance Data: For sheet metal flashing and trim, and its accessories, to include in maintenance manuals.

1.8 QUALITY ASSURANCE

A. Fabricator Qualifications: Employs skilled workers who custom fabricate sheet metal flashing and trim similar to that required for this Project and whose products have a record of successful in-service performance.

1. For copings and roof edge flashings that are SPRI ES-1 tested and FM Approvals approved, shop shall be listed as able to fabricate required details as tested and approved.

1.9 DELIVERY, STORAGE, AND HANDLING

A. Do not store sheet metal flashing and trim materials in contact with other materials that might cause staining, denting, or other surface damage. Store sheet metal flashing and trim materials away from uncured concrete and masonry.

B. Protect strippable protective covering on sheet metal flashing and trim from exposure to sunlight and high humidity, except to extent necessary for period of sheet metal flashing and trim installation.

1.10 WARRANTY

A. Special Warranty on Finishes: Manufacturer agrees to repair finish or replace sheet metal flashing and trim that shows evidence of deterioration of factory-applied finishes within specified warranty period.

1. Exposed Panel Finish: Deterioration includes, but is not limited to, the following:

a. Color fading more than 5 Hunter units when tested according to ASTM D 2244.
b. Chalking in excess of a No. 8 rating when tested according to ASTM D 4214.
c. Cracking, checking, peeling, or failure of paint to adhere to bare metal.

2. Finish Warranty Period: 20 years from date of Substantial Completion.

PART 2 - PRODUCTS

2.1 PERFORMANCE REQUIREMENTS

A. General: Sheet metal flashing and trim assemblies shall withstand wind loads, structural movement, thermally induced movement, and exposure to weather without failure due to defective manufacture, fabrication, installation, or other defects in construction. Completed sheet metal flashing and trim shall not rattle, leak, or loosen, and shall remain watertight.

B. Sheet Metal Standard for Flashing and Trim: Comply with NRCA's "The NRCA Roofing Manual" and SMACNA's "Architectural Sheet Metal Manual" requirements for dimensions and profiles shown unless more stringent requirements are indicated.

C. FM Approvals Listing: Manufacture and install copings and roof edge flashings that are listed in FM Approvals' "RoofNav" and approved for windstorm classification, Class 1-120. Identify materials with name of fabricator and design approved by FM Approvals.

D. SPRI Wind Design Standard: Manufacture and install copings and roof edge flashings tested according to SPRI ES-1 and capable of resisting the following design pressure:

1. Design Pressure: As indicated on Drawings.

E. Thermal Movements: Allow for thermal movements from ambient and surface temperature changes to prevent buckling, opening of joints, overstressing of components, failure of joint sealants, failure of connections, and other detrimental effects. Base calculations on surface temperatures of materials due to both solar heat gain and nighttime-sky heat loss.

1. Temperature Change: 120 deg F (67 deg C), ambient; 180 deg F (100 deg C), material surfaces.

2.2 SHEET METALS

A. General: Protect mechanical and other finishes on exposed surfaces from damage by applying strippable, temporary protective film before shipping.

B. Aluminum Sheet: ASTM B 209 (ASTM B 209M), alloy as standard with manufacturer for finish required, with temper as required to suit forming operations and performance required; with smooth, flat surface.

1. Exposed Coil-Coated Finish:

a. Two-Coat Fluoropolymer: AAMA 2605. Fluoropolymer finish containing not less than 70 percent PVDF resin by weight in color coat. Prepare, pretreat, and apply coating to exposed metal surfaces to comply with coating and resin manufacturers' written instructions.
b. Three-Coat Fluoropolymer: AAMA 2605. Fluoropolymer finish containing not less than 70 percent PVDF resin by weight in both color coat and clear topcoat. Prepare, pretreat, and apply coating to exposed metal surfaces to comply with coating and resin manufacturers' written instructions.
c. Mica Fluoropolymer: AAMA 2605. Two-coat fluoropolymer finish with suspended mica flakes containing not less than 70 percent PVDF resin by weight in color coat. Prepare, pretreat, and apply coating to exposed metal surfaces to comply with coating and resin manufacturers' written instructions.
d. Metallic Fluoropolymer: AAMA 2605. Three-coat fluoropolymer finish with suspended metallic flakes containing not less than 70 percent PVDF resin by weight in both color coat and clear topcoat. Prepare, pretreat, and apply coating to exposed metal surfaces to comply with coating and resin manufacturers' written instructions.

2. Color: As selected by Architect from manufacturer's full range.
3. Concealed Finish: Pretreat with manufacturer's standard white or light-colored acrylic or polyester backer finish, consisting of prime coat and wash coat with minimum total dry film thickness of 0.5 mil (0.013 mm).

C. Stainless-Steel Sheet: ASTM A 240/A 240M or ASTM A 666, Type 304, dead soft, fully annealed; with smooth, flat surface.

1. Finish: 2D (dull, cold rolled).

2.3 UNDERLAYMENT MATERIALS

A. Felt: ASTM D 226/D 226M, Type II (No. 30), asphalt-saturated organic felt; nonperforated.

B. Self-Adhering, High-Temperature Sheet: Minimum 30 mils (0.76 mm) thick, consisting of a slip-resistant polyethylene- or polypropylene-film top surface laminated to a layer of butyl- or SBS-modified asphalt

adhesive, with release-paper backing; specifically designed to withstand high metal temperatures beneath metal roofing. Provide primer according to written recommendations of underlayment manufacturer.

1. Products: Subject to compliance with requirements, provide one of the following:

   a. Carlisle Coatings & Waterproofing Inc.; CCW WIP 300HT.
   b. Henry Company; Blueskin PE200 HT.
   c. Owens Corning; WeatherLock Metal High Temperature Underlayment.

2. Thermal Stability: ASTM D 1970; stable after testing at 240 deg F (116 deg C) or higher.
3. Low-Temperature Flexibility: ASTM D 1970; passes after testing at minus 20 deg F (29 deg C) or lower.

C. Slip Sheet: Rosin-sized building paper, 3 lb/100 sq. ft. (0.16 kg/sq. m) minimum.

2.4 MISCELLANEOUS MATERIALS

A. General: Provide materials and types of fasteners, solder, protective coatings, sealants, and other miscellaneous items as required for complete sheet metal flashing and trim installation and as recommended by manufacturer of primary sheet metal or manufactured item unless otherwise indicated.

B. Fasteners: Wood screws, annular threaded nails, self-tapping screws, self-locking rivets and bolts, and other suitable fasteners designed to withstand design loads and recommended by manufacturer of primary sheet metal or manufactured item.

1. General: Blind fasteners or self-drilling screws, gasketed, with hex-washer head.

   a. Exposed Fasteners: Heads matching color of sheet metal using plastic caps or factory-applied coating. Provide metal-backed EPDM or PVC sealing washers under heads of exposed fasteners bearing on weather side of metal.
   b. Blind Fasteners: High-strength aluminum or stainless-steel rivets suitable for metal being fastened.
   c. Spikes and Ferrules: Same material as gutter; with spike with ferrule matching internal gutter width.

2. Fasteners for Aluminum Sheet: Aluminum or Series 300 stainless steel.
3. Fasteners for Stainless-Steel Sheet: Series 300 stainless steel.
4. Fasteners for Zinc-Coated (Galvanized) Steel Sheet: Series 300 stainless steel or hot-dip galvanized steel according to ASTM A 153/A 153M or ASTM F 2329.

C. Solder:

1. For Stainless Steel: ASTM B 32, Grade Sn96, with acid flux of type recommended by stainless-steel sheet manufacturer.
2. For Zinc-Coated (Galvanized) Steel: ASTM B 32, with maximum lead content of 0.2 percent.

D. Sealant Tape: Pressure-sensitive, 100 percent solids, polyisobutylene compound sealant tape with release-paper backing. Provide permanently elastic, nonsag, nontoxic, nonstaining tape 1/2 inch (13 mm) wide and 1/8 inch (3 mm) thick.

E. Elastomeric Sealant: ASTM C 920, elastomeric polyurethane or silicone polymer sealant; of type, grade, class, and use classifications required to seal joints in sheet metal flashing and trim and remain watertight.

F. Butyl Sealant: ASTM C 1311, single-component, solvent-release butyl rubber sealant; polyisobutylene plasticized; heavy bodied for hooked-type expansion joints with limited movement.

G. Epoxy Seam Sealer: Two-part, noncorrosive, aluminum seam-cementing compound, recommended by aluminum manufacturer for exterior nonmoving joints, including riveted joints.

H. Bituminous Coating: Cold-applied asphalt emulsion according to ASTM D 1187.

I. Asphalt Roofing Cement: ASTM D 4586, asbestos free, of consistency required for application.

2.5 FABRICATION, GENERAL

A. General: Custom fabricate sheet metal flashing and trim to comply with details shown and recommendations in cited sheet metal standard that apply to design, dimensions, geometry, metal thickness, and other characteristics of item required. Fabricate sheet metal flashing and trim in shop to greatest extent possible.

1. Fabricate sheet metal flashing and trim in thickness or weight needed to comply with performance requirements, but not less than that specified for each application and metal.
2. Obtain field measurements for accurate fit before shop fabrication.
3. Form sheet metal flashing and trim to fit substrates without excessive oil canning, buckling, and tool marks; true to line, levels, and slopes; and with exposed edges folded back to form hems.
4. Conceal fasteners and expansion provisions where possible. Do not use exposed fasteners on faces exposed to view.

B. Fabrication Tolerances: Fabricate sheet metal flashing and trim that is capable of installation to a tolerance of 1/4 inch in 20 feet (6 mm in 6 m) on slope and location lines indicated on Drawings and within 1/8-inch (3-mm) offset of adjoining faces and of alignment of matching profiles.

C. Fabrication Tolerances: Fabricate sheet metal flashing and trim that is capable of installation to tolerances specified in MCA's "Guide Specification for Residential Metal Roofing."

D. Expansion Provisions: Form metal for thermal expansion of exposed flashing and trim.

1. Form expansion joints of intermeshing hooked flanges, not less than 1 inch (25 mm) deep, filled with butyl sealant concealed within joints.
2. Use lapped expansion joints only where indicated on Drawings.

E. Sealant Joints: Where movable, nonexpansion-type joints are required, form metal to provide for proper installation of elastomeric sealant according to cited sheet metal standard.

F. Fabricate cleats and attachment devices from same material as accessory being anchored or from compatible, noncorrosive metal.

G. Fabricate cleats and attachment devices of sizes as recommended by cited sheet metal standard and by FM Global Property Loss Prevention Data Sheet 1-49 for application, but not less than thickness of metal being secured.

H. Seams: Fabricate nonmoving seams with flat-lock seams. Tin edges to be seamed, form seams, and solder.

I. Seams: Fabricate nonmoving seams with flat-lock seams. Form seams and seal with elastomeric sealant unless otherwise recommended by sealant manufacturer for intended use. Rivet joints where necessary for strength.

J. Do not use graphite pencils to mark metal surfaces.

2.6 ROOF-DRAINAGE SHEET METAL FABRICATIONS

A. Hanging Gutters: Fabricate to cross section required, complete with end pieces, outlet tubes, and other accessories as required. Fabricate in minimum 96-inch- (2400-mm-) long sections. Furnish flat-stock gutter brackets and flat-stock gutter spacers and straps fabricated from same metal as gutters, of size recommended by cited sheet metal standard but with thickness not less than twice the gutter thickness. Fabricate expansion joints, expansion-joint covers, gutter bead reinforcing bars, and gutter accessories from same metal as gutters. Shop fabricate interior and exterior corners.

1. Gutter Profile: Style B according to cited sheet metal standard.
2. Expansion Joints: Butt type with cover plate.
3. Accessories: Wire-ball downspout strainer and valley baffles.
4. Gutters with Girth 16 to 20 Inches (406 to 508 mm): Fabricate from the following materials:

   a. Aluminum-Zinc Alloy-Coated Steel: 0.028 inch (0.71 mm) thick.

5. Gutters with Girth 21 to 25 Inches (530 to 640 mm): Fabricate from the following materials:

   a. Aluminum-Zinc Alloy-Coated Steel: 0.034 inch (0.86 mm) thick.

B. Downspouts: Fabricate rectangular downspouts to dimensions indicated, complete with mitered elbows. Furnish with metal hangers from same material as downspouts and anchors. Shop fabricate elbows.

1. Fabricated Hanger Style: Fig 1-35B according to SMACNA's "Architectural Sheet Metal Manual."
2. Fabricate from the following materials:

   a. Aluminum-Zinc Alloy-Coated Steel: 0.022 inch (0.56 mm) thick.

C. Parapet Scuppers: Fabricate welded scuppers to dimensions required, with closure flange trim to exterior, 4-inch- (100-mm-) wide wall flanges to interior, and base extending 4 inches (100 mm) beyond cant or tapered strip into field of roof. Fasten gravel guard angles to base of scupper. Fabricate from the following materials:

1. Stainless Steel: 0.019 inch (0.48 mm) thick.

D. Conductor Heads: Fabricate welded conductor heads with flanged back and stiffened top edge and of dimensions and shape required, complete with outlet tubes, exterior flange trim, and built-in overflows. Fabricate from the following materials:

1. Aluminum-Zinc Alloy-Coated Steel: 0.034 inch (0.86 mm) thick minimum.
2. Stainless Steel: 0.019 inch (0.48 mm) thick.

E. Splash Pans: Fabricate to dimensions and shape required and from the following materials:

1. Aluminum: 0.040 inch (1.02 mm) thick.
2. Stainless Steel: 0.019 inch (0.48 mm) thick.

2.7 LOW-SLOPE ROOF SHEET METAL FABRICATIONS

A. Roof Edge Flashing (Gravel Stop) and Fascia Cap: Fabricate in minimum 96-inch- (2400-mm-) long, but not exceeding 12-foot- (3.6-m-) long sections. Furnish with 6-inch- (150-mm-) wide, joint cover plates. Shop fabricate interior and exterior corners.

1. Joint Style: Butted with expansion space and 6-inch- (150-mm-) wide, concealed backup plate.
2. Fabricate from the Following Materials:

a. Aluminum-Zinc Alloy-Coated Steel: 0.028 inch (0.71 mm) thick.

B. Copings: Fabricate in minimum 96-inch- (2400-mm-) long, but not exceeding 12-foot- (3.6-m-) long, sections. Fabricate joint plates of same thickness as copings. Furnish with continuous cleats to support edge of external leg and interior leg. Miter corners, and solder or weld watertight. Shop fabricate interior and exterior corners.

1. Coping Profile: Fig 3-4A according to SMACNA's "Architectural Sheet Metal Manual."
2. Joint Style: Butted with expansion space and 6-inch- (150-mm-) wide, concealed backup plate.
3. Fabricate from the Following Materials:

a. Aluminum-Zinc Alloy-Coated Steel: 0.040 inch (1.02 mm) thick.

C. Roof and Roof-to-Wall Transition Expansion-Joint Cover: Fabricate from the following materials: Shop fabricate interior and exterior corners.

1. Aluminum-Zinc Alloy-Coated Steel: 0.034 inch (0.86 mm) thick.

D. Base Flashing: Fabricate from the following materials:

1. Aluminum-Zinc Alloy-Coated Steel: 0.028 inch (0.71 mm) thick.

E. Counterflashing: Fabricate from the following materials:

1. Aluminum-Zinc Alloy-Coated Steel: 0.022 inch (0.56 mm) thick.

F. Flashing Receivers: Fabricate from the following materials:

1. Aluminum-Zinc Alloy-Coated Steel: 0.022 inch (0.56 mm) thick.

G. Roof-Penetration Flashing: Fabricate from the following materials:

1. Aluminum-Zinc Alloy-Coated Steel: 0.028 inch (0.71 mm) thick.

H. Roof-Drain Flashing: Fabricate from the following materials:

1. Stainless Steel: 0.016 inch (0.40 mm) thick.

2.8 WALL SHEET METAL FABRICATIONS

A. Through-Wall Flashing: Fabricate continuous flashings in minimum 96-inch- (2400-mm-) long, but not exceeding 12-foot- (3.6-m-) long, sections, under copings, and at shelf angles. Fabricate discontinuous lintel, sill, and similar flashings to extend 6 inches (150 mm) beyond each side of wall openings; and form with 2-inch- (50-mm-) high, end dams. Fabricate from the following materials:

1. Stainless Steel: 0.016 inch (0.40 mm) thick.

B. Opening Flashings in Frame Construction: Fabricate head, jamb, sill, and similar flashings to extend 4 inches (100 mm) beyond wall openings. Form head and sill flashing with 2-inch- (50-mm-) high, end dams. Fabricate from the following materials:

1. Stainless Steel: 0.016 inch (0.40 mm) thick.

C. Wall Expansion-Joint Cover: Fabricate from the following materials:

1. Aluminum: 0.040 inch (1.02 mm) thick.
2. Stainless Steel: 0.019 inch (0.48 mm) thick.

2.9 MISCELLANEOUS SHEET METAL FABRICATIONS

A. Equipment Support Flashing: Fabricate from the following materials:

1. Aluminum-Zinc Alloy-Coated Steel: 0.028 inch (0.71 mm) thick.

B. Overhead-Piping Safety Pans: Fabricate from the following materials:

1. Stainless Steel: 0.025 inch (0.64 mm) thick.
2. Aluminum-Zinc Alloy-Coated Steel: 0.040 inch (1.02 mm) thick.

PART 3 - EXECUTION

3.1 EXAMINATION

A. Examine substrates, areas, and conditions, with Installer present, for compliance with requirements for installation tolerances, substrate, and other conditions affecting performance of the Work.

1. Verify compliance with requirements for installation tolerances of substrates.
2. Verify that substrate is sound, dry, smooth, clean, sloped for drainage, and securely anchored.
3. Verify that air- or water-resistant barriers have been installed over sheathing or backing substrate to prevent air infiltration or water penetration.

B. Proceed with installation only after unsatisfactory conditions have been corrected.

3.2 UNDERLAYMENT INSTALLATION

A. Felt Underlayment: Install felt underlayment, wrinkle free, using adhesive to minimize use of mechanical fasteners under sheet metal flashing and trim. Apply in shingle fashion to shed water, with lapped joints of not less than 2 inches (50 mm).

B. Synthetic Underlayment: Install synthetic underlayment, wrinkle free, according to manufacturers' written instructions, and using adhesive where possible to minimize use of mechanical fasteners under sheet metal.

C. Self-Adhering Sheet Underlayment: Install self-adhering sheet underlayment, wrinkle free. Prime substrate if recommended by underlayment manufacturer. Comply with temperature restrictions of underlayment manufacturer for installation; use primer for installing underlayment at low temperatures.

Apply in shingle fashion to shed water, with end laps of not less than 6 inches (150 mm) staggered 24 inches (600 mm) between courses. Overlap side edges not less than 3-1/2 inches (90 mm). Roll laps and edges with roller. Cover underlayment within 14 days.

D. Apply slip sheet, wrinkle free, over underlayment before installing sheet metal flashing and trim.

3.3 INSTALLATION, GENERAL

A. General: Anchor sheet metal flashing and trim and other components of the Work securely in place, with provisions for thermal and structural movement. Use fasteners, solder, protective coatings, separators, sealants, and other miscellaneous items as required to complete sheet metal flashing and trim system.

1. Install sheet metal flashing and trim true to line, levels, and slopes. Provide uniform, neat seams with minimum exposure of solder, welds, and sealant.
2. Install sheet metal flashing and trim to fit substrates and to result in watertight performance. Verify shapes and dimensions of surfaces to be covered before fabricating sheet metal.
3. Run continuous cleats attached not more than 6 inches (150 mm) on center. Bend tabs over fasteners.
4. Install exposed sheet metal flashing and trim with limited oil canning, and free of buckling and tool marks.
5. Torch cutting of sheet metal flashing and trim is not permitted.
6. Do not use graphite pencils to mark metal surfaces.

B. Metal Protection: Where dissimilar metals contact each other, or where metal contacts pressure-treated wood or other corrosive substrates, protect against galvanic action or corrosion by painting contact surfaces with bituminous coating or by other permanent separation as recommended by sheet metal manufacturer or cited sheet metal standard.

1. Coat concealed side of uncoated-aluminum and stainless-steel sheet metal flashing and trim with bituminous coating where flashing and trim contact wood, ferrous metal, or cementitious construction.
2. Underlayment: Where installing sheet metal flashing and trim directly on cementitious or wood substrates, install underlayment and cover with slip sheet.

C. Expansion Provisions: Provide for thermal expansion of exposed flashing and trim. Space movement joints at maximum of 10 feet (3 m) with no joints within 24 inches (600 mm) of corner or intersection.

1. Form expansion joints of intermeshing hooked flanges, not less than 1 inch (25 mm) deep, filled with sealant concealed within joints.
2. Use lapped expansion joints only where indicated on Drawings.

D. Fasteners: Use fastener sizes that penetrate wood blocking or sheathing not less than 1-1/4 inches (32 mm) for nails and not less than 3/4 inch (19 mm) for wood screws substrate, or not less than recommended by fastener manufacturer to achieve maximum pull-out resistance.

E. Conceal fasteners and expansion provisions where possible in exposed work and locate to minimize possibility of leakage. Cover and seal fasteners and anchors as required for a tight installation.

F. Seal joints as required for watertight construction.

1. Use sealant-filled joints unless otherwise indicated. Embed hooked flanges of joint members not less than 1 inch (25 mm) into sealant. Form joints to completely conceal sealant. When ambient temperature at time of installation is between 40 and 70 deg F (4 and 21 deg C), set joint members

for 50 percent movement each way. Adjust setting proportionately for installation at higher ambient temperatures. Do not install sealant-type joints at temperatures below 40 deg F (4 deg C).

2. Prepare joints and apply sealants to comply with requirements in Section 079200 "Joint Sealants."

G. Soldered Joints: Clean surfaces to be soldered, removing oils and foreign matter. Pre-tin edges of sheets with solder to width of 1-1/2 inches (38 mm); however, reduce pre-tinning where pre-tinned surface would show in completed Work.

1. Do not solder aluminum sheet.
2. Do not use torches for soldering.
3. Heat surfaces to receive solder, and flow solder into joint. Fill joint completely. Completely remove flux and spatter from exposed surfaces.
4. Stainless-Steel Soldering: Tin edges of uncoated sheets, using solder for stainless steel and acid flux. Promptly remove acid flux residue from metal after tinning and soldering. Comply with solder manufacturer's recommended methods for cleaning and neutralization.

3.4 ROOF-DRAINAGE SYSTEM INSTALLATION

A. General: Install sheet metal roof-drainage items to produce complete roof-drainage system according to cited sheet metal standard unless otherwise indicated. Coordinate installation of roof perimeter flashing with installation of roof-drainage system.

B. Hanging Gutters: Join sections with riveted and soldered joints or joints sealed with sealant. Provide for thermal expansion. Attach gutters at eave or fascia to firmly anchor them in position. Provide end closures and seal watertight with sealant. Slope to downspouts.

1. Fasten gutter spacers to front and back of gutter.
2. Anchor and loosely lock back edge of gutter to continuous cleat.
3. Anchor gutter with gutter brackets spaced not more than 36 inches (910 mm) apart to roof deck, unless otherwise indicated, and loosely lock to front gutter bead.
4. Install gutter with expansion joints at locations indicated, but not exceeding, 50 feet (15.24 m) apart. Install expansion-joint caps.

C. Downspouts: Join sections with 1-1/2-inch (38-mm) telescoping joints.

1. Provide hangers with fasteners designed to hold downspouts securely to walls. Locate hangers at top and bottom and at approximately 60 inches (1500 mm) o.c.
1. Connect downspouts to underground drainage system, unless otherwise indicated.
2. Provide elbows at base of downspout to direct water away from building, where indicated.

D. Splash Pans: Install where downspouts discharge on low-slope roofs. Set in asphalt roofing cement or elastomeric sealant compatible with the substrate.

E. Parapet Scuppers: Continuously support scupper, set to correct elevation, and seal flanges to interior wall face, over cants or tapered edge strips, and under roofing membrane.

1. Anchor scupper closure trim flange to exterior wall and solder or seal with elastomeric sealant to scupper.

F. Expansion-Joint Covers: Install expansion-joint covers at locations and of configuration indicated. Lap joints minimum of 4 inches (100 mm) in direction of water flow.

3.5 ROOF FLASHING INSTALLATION

A. General: Install sheet metal flashing and trim to comply with performance requirements, sheet metal manufacturer's written installation instructions, and cited sheet metal standard. Provide concealed fasteners where possible, and set units true to line, levels, and slopes. Install work with laps, joints, and seams that are permanently watertight and weather resistant.

B. Roof Edge Flashing: Anchor to resist uplift and outward forces according to recommendations in cited sheet metal standard unless otherwise indicated. Interlock bottom edge of roof edge flashing with continuous cleat anchored to substrate at staggered 3-inch (75-mm) centers.

C. Roof Edge Flashing: Anchor to resist uplift and outward forces according to recommendations in FM Global Property Loss Prevention Data Sheet 1-49 for FM Approvals' listing for required windstorm classification.

D. Copings: Anchor to resist uplift and outward forces according to recommendations in FM Global Property Loss Prevention Data Sheet 1-49 for specified FM Approvals' listing for required windstorm classification.

E. Pipe or Post Counterflashing: Install counterflashing umbrella with close-fitting collar with top edge flared for elastomeric sealant, extending minimum of 4 inches (100 mm) over base flashing. Install stainless-steel draw band and tighten.

F. Counterflashing: Coordinate installation of counterflashing with installation of base flashing. Insert counterflashing in reglets or receivers and fit tightly to base flashing. Extend counterflashing 4 inches (100 mm) over base flashing. Lap counterflashing joints minimum of 4 inches (100 mm). Secure in waterproof manner by means of snap-in installation and sealant or lead wedges and sealant unless otherwise indicated.

G. Roof-Penetration Flashing: Coordinate installation of roof-penetration flashing with installation of roofing and other items penetrating roof. Seal with elastomeric sealant and clamp flashing to pipes that penetrate roof.

3.6 WALL FLASHING INSTALLATION

A. General: Install sheet metal wall flashing to intercept and exclude penetrating moisture according to cited sheet metal standard unless otherwise indicated. Coordinate installation of wall flashing with installation of wall-opening components such as windows, doors, and louvers.

B. Through-Wall Flashing: Installation of through-wall flashing is specified in Section 042000 "Unit Masonry."

C. Opening Flashings in Frame Construction: Install continuous head, sill, jamb, and similar flashings to extend 4 inches (100 mm) beyond wall openings.

3.7 MISCELLANEOUS FLASHING INSTALLATION

A. Equipment Support Flashing: Coordinate installation of equipment support flashing with installation of roofing and equipment. Weld or seal flashing with elastomeric sealant to equipment support member.

3.8 ERECTION TOLERANCES

A. Installation Tolerances: Shim and align sheet metal flashing and trim within installed tolerance of 1/4 inch in 20 feet (6 mm in 6 m) on slope and location lines indicated on Drawings and within 1/8-inch (3-mm) offset of adjoining faces and of alignment of matching profiles.

B. Installation Tolerances: Shim and align sheet metal flashing and trim within installed tolerances specified in MCA's "Guide Specification for Residential Metal Roofing."

3.9 CLEANING AND PROTECTION

A. Clean exposed metal surfaces of substances that interfere with uniform oxidation and weathering.

B. Clean and neutralize flux materials. Clean off excess solder.

C. Clean off excess sealants.

D. Remove temporary protective coverings and strippable films as sheet metal flashing and trim are installed unless otherwise indicated in manufacturer's written installation instructions. On completion of sheet metal flashing and trim installation, remove unused materials and clean finished surfaces as recommended by sheet metal flashing and trim manufacturer. Maintain sheet metal flashing and trim in clean condition during construction.

E. Replace sheet metal flashing and trim that have been damaged or that have deteriorated beyond successful repair by finish touchup or similar minor repair procedures.

END OF SECTION 076200

SECTION 077100 - ROOF SPECIALTIES

PART 1 - GENERAL

1.1 RELATED DOCUMENTS

A. Drawings and general provisions of the Contract, including General and Supplementary Conditions and Division 01 Specification Sections, apply to this Section.

1.2 SUMMARY

A. Section Includes:

1. Copings.
2. Roof-edge specialties.
3. Roof-edge drainage systems.
4. Counterflashings.

B. Related Requirements:

1. Section 061053 "Miscellaneous Rough Carpentry" for wood nailers, curbs, and blocking.
2. Section 074113.16 "Standing-Seam Metal Roof Panels" for roof-edge drainage-system components provided by metal-roof-panel manufacturer.
3. Section 076200 "Sheet Metal Flashing and Trim" for custom- and site-fabricated sheet metal flashing and trim.
4. Section 077200 "Roof Accessories" for set-on-type curbs, equipment supports, and other manufactured roof accessory units.
5. Section 077253 "Snow Guards" for manufactured snow guard devices.
6. Section 079200 "Joint Sealants" for field-applied sealants between roof specialties and adjacent materials.

1.3 ACTION SUBMITTALS

A. Product Data: For each type of product.

1. Include construction details, material descriptions, dimensions of individual components and profiles, and finishes.

B. Shop Drawings: For roof specialties.

1. Include plans, elevations, expansion-joint locations, keyed details, and attachments to other work. Distinguish between plant- and field-assembled work.
2. Include details for expansion and contraction; locations of expansion joints, including direction of expansion and contraction.
3. Indicate profile and pattern of seams and layout of fasteners, cleats, clips, and other attachments.
4. Detail termination points and assemblies, including fixed points.
5. Include details of special conditions.

C. Samples for Initial Selection: For each type of roof specialty indicated with factory-applied color finishes.

D. Samples for Verification:

1. Include Samples of each type of roof specialty to verify finish and color selection, in manufacturer's standard sizes.
2. Include copings, roof-edge specialties, roof-edge drainage systems, counterflashings made from 12-inch (300-mm) lengths of full-size components in specified material, and including fasteners, cover joints, accessories, and attachments.

1.4 INFORMATIONAL SUBMITTALS

A. Qualification Data: For manufacturer.

B. Product Certificates: For each type of roof specialty.

C. Product Test Reports: For copings and roof-edge flashings, for tests performed by a qualified testing agency.

1.5 CLOSEOUT SUBMITTALS

A. Maintenance Data: For roofing specialties to include in maintenance manuals.

1.6 QUALITY ASSURANCE

A. Manufacturer Qualifications: A qualified manufacturer offering products meeting requirements that are FM Approvals listed for specified class and SPRI ES-1 tested to specified design pressure.

B. Source Limitations: Obtain roof specialties approved by manufacturer providing roofing-system warranty specified in Section 074113.16 “Standing-Seam Metal Roof Panels” and 075323 “Ethylene-Propylene-Diene-Monomer (EPDM) Roofing.”

1.7 DELIVERY, STORAGE, AND HANDLING

A. Do not store roof specialties in contact with other materials that might cause staining, denting, or other surface damage. Store roof specialties away from uncured concrete and masonry.

B. Protect strippable protective covering on roof specialties from exposure to sunlight and high humidity, except to extent necessary for the period of roof-specialty installation.

1.8 FIELD CONDITIONS

A. Field Measurements: Verify profiles and tolerances of roof-specialty substrates by field measurements before fabrication, and indicate measurements on Shop Drawings.

B. Coordination: Coordinate roof specialties with flashing, trim, and construction of parapets, roof deck, roof and wall panels, and other adjoining work to provide a leakproof, secure, and noncorrosive installation.

1.9 WARRANTY

A. Roofing-System Warranty: Roof specialties are included in warranty provisions in Section 074113.16 "Standing-Seam Metal Roof Panels" and 075323 "Ethylene-Diene-Propylene-Monomer (EPDM) Roofing."

B. Special Warranty on Painted Finishes: Manufacturer agrees to repair finish or replace roof specialties that show evidence of deterioration of factory-applied finishes within specified warranty period.

1. Fluoropolymer Finish: Deterioration includes, but is not limited to, the following:

a. Color fading more than 5 Hunter units when tested according to ASTM D 2244.
b. Chalking in excess of a No. 8 rating when tested according to ASTM D 4214.
c. Cracking, checking, peeling, or failure of paint to adhere to bare metal.

2. Finish Warranty Period: 20 years from date of Substantial Completion.

PART 2 - PRODUCTS

2.1 PERFORMANCE REQUIREMENTS

A. General Performance: Roof specialties shall withstand exposure to weather and resist thermally induced movement without failure, rattling, leaking, or fastener disengagement due to defective manufacture, fabrication, installation, or other defects in construction.

B. FM Approvals' Listing: Manufacture and install copings and roof-edge specialties that are listed in FM Approvals' "RoofNav" and approved for windstorm classification, Class 1-90. Identify materials with FM Approvals' markings.

C. SPRI Wind Design Standard: Manufacture and install copings and roof-edge specialties tested according to SPRI ES-1 and capable of resisting the following design pressures:

1. Design Pressure: As indicated on Drawings.

D. Thermal Movements: Allow for thermal movements from ambient and surface temperature changes to prevent buckling, opening of joints, hole elongation, overstressing of components, failure of joint sealants, failure of connections, and other detrimental effects. Provide clips that resist rotation and avoid shear stress as a result of thermal movements. Base calculations on surface temperatures of materials due to both solar heat gain and nighttime-sky heat loss.

1. Temperature Change (Range): 120 deg F (67 deg C), ambient; 180 deg F (100 deg C), material surfaces.

2.2 COPINGS

A. Metal Copings: Manufactured coping system consisting of metal coping cap in section lengths not exceeding 12 feet (3.6 m), concealed anchorage; with corner units, end cap units, and concealed splice plates with finish matching coping caps.

1. Manufacturers: Subject to compliance with requirements, provide products by one of the following:

a. ATAS International, Inc.
b. Berridge Manufacturing Company.
c. Drexel Metals.
d. Hickman Company, W. P.
e. Merchant and Evans.
f. Metal-Era, Inc.
g. PAC-CLAD; Petersen Aluminum Corporation.
h. Manufacturer recommended in writing by roofing manufacturer.

2. Metallic-Coated Steel Sheet Coping Caps: Zinc-coated (galvanized) steel, thickness as required to meet performance requirements, but not less than 0.028-inch (0.71-mm).

a. Surface: Smooth, flat finish.
b. Finish: Two-coat fluoropolymer.
c. Color: To match cast stone color.

2.3 ROOF-EDGE SPECIALTIES

A. Roof-Edge Fascia: Manufactured, two-piece, roof-edge fascia consisting of snap-on metal fascia cover in section lengths not exceeding 12 feet (3.6 m) and a continuous metal receiver with integral drip-edge cleat to engage fascia cover and secure single-ply roof membrane. Provide matching corner units.

1. Manufacturers: Subject to compliance with requirements, provide products by one of the following:

a. Berridge Manufacturing Company.
b. Drexel Metals.
c. Hickman Company, W. P.
d. Metal-Era, Inc.
e. Manufacturer recommended in writing by roofing manufacturer.

2. Metallic-Coated Steel Sheet Fascia Covers: Zinc-coated (galvanized) steel, thickness as required to meet performance requirements, but not less than 0.028-inch (0.71-mm).

a. Surface: Smooth, flat finish.
b. Finish: Two-coat fluoropolymer.
c. Color: As selected by Architect from manufacturer's full range.

2.4 ROOF-EDGE DRAINAGE SYSTEMS

A. Manufacturers: Subject to compliance with requirements, provide products by one of the following:

1. ATAS International, Inc.
2. Drexel Metals.
3. Hickman Company, W. P.
4. Merchant and Evans.
5. Metal-Era, Inc.
6. Manufacturer recommended in writing by roofing manufacturer.

B. Gutters: Manufactured in uniform section lengths not exceeding 12 feet (3.6 m), with matching corner units, ends, outlet tubes, and other accessories. Elevate back edge at least 1 inch (25 mm) above front edge. Furnish flat-stock gutter straps, gutter brackets, expansion joints, and expansion-joint covers fabricated from same metal as gutters.

1. Zinc-Coated Steel: Nominal 0.034-inch (0.86-mm) thickness.
2. Gutter Profile: Style K according to SMACNA's "Architectural Sheet Metal Manual."
3. Corners: Factory mitered and continuously welded.
4. Gutter Supports: Gutter brackets and straps with finish matching the gutters.
5. Gutter Accessories: Wire ball downspout strainer and flat ends.

C. Downspouts: Plain rectangular complete with mitered elbows, manufactured from the following exposed metal. Furnish with metal hangers, from same material as downspouts, and anchors.

1. Zinc-Coated Steel: Nominal 0.028-inch (0.71-mm) thickness.

D. Parapet Scuppers: Manufactured, welded with closure flange trim to exterior, 4-inch- (100-mm-) wide wall flanges to interior, and base extending 4 inches (100 mm) beyond cant or tapered strip into field of roof.

1. Stainless Steel: 0.019 inch (0.48 mm) thick.

E. Conductor Heads: Manufactured, welded conductor heads, each with integral scupper and stiffened top edge, and of dimensions and shape indicated, complete with outlet tube that nests into upper end of downspout, exterior flange trim, and built-in overflow.

1. Zinc-Coated Steel: Nominal 0.028-inch (0.71-mm) thickness.
2. Stainless Steel: 0.016 inch (0.40 mm) thick.

F. Splash Pans: Fabricate from the following exposed metal:

1. Stainless Steel: 0.019 inch (0.48 mm) thick.

G. Zinc-Coated Steel Finish: Two-coat fluoropolymer.

1. Color: As selected by Architect from manufacturer’s full range.

2.5 COUNTERFLASHINGS

A. Manufacturers: Subject to compliance with requirements, provide products by one of the following:

1. Berridge Manufacturing Company.
2. Drexel Metals.
3. Fry Reglet Corporation.
4. Heckmann Building Products, Inc.
5. Hickman Company, W. P.
6. Metal-Era, Inc.
7. Manufacturer recommended in writing by roofing manufacturer.

B. Counterflashings: Manufactured units of heights to overlap top edges of base flashings by 4 inches (100 mm) and in lengths not exceeding 12 feet (3.6 m) designed to snap into through-wall-flashing receiver and compress against base flashings with joints lapped, from the following exposed metal:

1. Zinc-Coated Steel: Nominal 0.022-inch (0.56-mm) thickness.

C. Accessories:

1. Flexible-Flashing Retainer: Provide resilient plastic or rubber accessory to secure flexible flashing in reglet where clearance does not permit use of standard metal counterflashing or where reglet is provided separate from metal counterflashing.
2. Counterflashing Wind-Restraint Clips: Provide clips to be installed before counterflashing to prevent wind uplift of counterflashing lower edge.

D. Zinc-Coated Steel Finish:

1. At standing seam metal roofing: Two-coat mica fluoropolymer, with color to match standing seam metal roofing
2. At all other locations: Two-coat fluoropolymer, with color as selected by Architect from manufacturer's full range.

2.6 MATERIALS

A. Zinc-Coated (Galvanized) Steel Sheet: ASTM A 653/A 653M, G90 (Z275) coating designation.

B. Stainless-Steel Sheet: ASTM A 240/A 240M or ASTM A 666, Type 304.

2.7 UNDERLAYMENT MATERIALS

A. Self-Adhering, High-Temperature Sheet: Minimum 30 to 40 mils (0.76 to 1.0 mm) thick, consisting of slip-resisting polyethylene-film top surface laminated to layer of butyl or SBS-modified asphalt adhesive, with release-paper backing; cold applied. Provide primer when recommended by underlayment manufacturer.

1. Products: Subject to compliance with requirements, provide one of the following:

   a. Carlisle Coatings & Waterproofing Inc; CCW WIP 300HT.
   b. GCP Applied Technologies Inc.; Grace Ice and Water Shield HT.
   c. Henry Company; Blueskin PE200 HT.
   d. Metal-Fab Manufacturing, a Drexel Metals Company; Metshield.
   e. Manufacturer recommended in writing by roofing manufacturer.

2. Thermal Stability: ASTM D 1970/D 1970M; stable after testing at 240 deg F (116 deg C).
3. Low-Temperature Flexibility: ASTM D 1970/D 1970M; passes after testing at minus 20 deg F (29 deg C).

B. Slip Sheet: Rosin-sized building paper, 3-lb/100 sq. ft. (0.16-kg/sq. m) minimum.

2.8 MISCELLANEOUS MATERIALS

A. Fasteners: Manufacturer's recommended fasteners, suitable for application and designed to meet performance requirements. Furnish the following unless otherwise indicated:

1. Exposed Penetrating Fasteners: Gasketed screws with hex washer heads matching color of sheet metal.
2. Fasteners for Stainless-Steel Sheet: Series 300 stainless steel.
3. Fasteners for Zinc-Coated (Galvanized) Steel Sheet: Series 300 stainless steel or hot-dip zinc-coated steel according to ASTM A 153/A 153M or ASTM F 2329.

B. Elastomeric Sealant: ASTM C 920, elastomeric silicone polymer sealant of type, grade, class, and use classifications required by roofing-specialty manufacturer for each application.

C. Butyl Sealant: ASTM C 1311, single-component, solvent-release butyl rubber sealant; polyisobutylene plasticized; heavy bodied for hooked-type joints with limited movement.

D. Bituminous Coating: Cold-applied asphalt emulsion complying with ASTM D 1187/D 1187M.

2.9 FINISHES

A. Comply with NAAMM's "Metal Finishes Manual for Architectural and Metal Products" for recommendations for applying and designating finishes.

B. Protect mechanical and painted finishes on exposed surfaces from damage by applying a strippable, temporary protective covering before shipping.

C. Appearance of Finished Work: Noticeable variations in same piece are unacceptable. Variations in appearance of adjoining components are acceptable if they are within the range of approved Samples and are assembled or installed to minimize contrast.

D. Coil-Coated Galvanized-Steel Sheet Finishes:

1. High-Performance Organic Finish: Prepare, pretreat, and apply coating to exposed metal surfaces to comply with ASTM A 755/A 755M and coating and resin manufacturers' written instructions.
   a. Two-Coat Fluoropolymer: AAMA 621. Fluoropolymer finish containing not less than 70 percent PVDF resin by weight in color coat. Prepare, pretreat, and apply coating to exposed metal surfaces to comply with coating and resin manufacturers' written instructions.
   b. Two-Coat Mica Fluoropolymer: AAMA 621. Fluoropolymer finish with suspended mica flakes containing not less than 70 percent PVDF resin by weight in color coat. Prepare, pretreat, and apply coating to exposed metal surfaces to comply with coating and resin manufacturers' written instructions.
   c. Concealed Surface Finish: Apply pretreatment and manufacturer's standard acrylic or polyester backer finish consisting of prime coat and wash coat with a minimum total dry film thickness of 0.5 mil (0.013 mm).

PART 3 - EXECUTION

3.1 EXAMINATION

A. Examine substrates, areas, and conditions, with Installer present, to verify actual locations, dimensions, and other conditions affecting performance of the Work.

B. Examine walls, roof edges, and parapets for suitable conditions for roof specialties.

C. Verify that substrate is sound, dry, smooth, clean, sloped for drainage where applicable, and securely anchored.

D. Proceed with installation only after unsatisfactory conditions have been corrected.

3.2 UNDERLAYMENT INSTALLATION

A. Self-Adhering Sheet Underlayment: Apply primer if required by manufacturer. Comply with temperature restrictions of underlayment manufacturer for installation. Apply wrinkle free, in shingle fashion to shed water, and with end laps of not less than 6 inches (152 mm) staggered 24 inches (610 mm) between courses. Overlap side edges not less than 3-1/2 inches (90 mm). Roll laps with roller. Cover underlayment within 14 days.

1. Apply continuously under copings, roof-edge specialties, and counterflashings.
2. Coordinate application of self-adhering sheet underlayment under roof specialties with requirements for continuity with adjacent air barrier materials.

B. Slip Sheet: Install with tape or adhesive for temporary anchorage to minimize use of mechanical fasteners under roof specialties. Apply in shingle fashion to shed water, with lapped joints of not less than 2 inches (50 mm).

3.3 INSTALLATION, GENERAL

A. General: Install roof specialties according to manufacturer's written instructions. Anchor roof specialties securely in place, with provisions for thermal and structural movement. Use fasteners, solder, protective coatings, separators, underlayments, sealants, and other miscellaneous items as required to complete roof-specialty systems.

1. Install roof specialties level, plumb, true to line and elevation; with limited oil-canning and without warping, jogs in alignment, buckling, or tool marks.
2. Provide uniform, neat seams with minimum exposure of solder and sealant.
3. Install roof specialties to fit substrates and to result in weathertight performance. Verify shapes and dimensions of surfaces to be covered before manufacture.
4. Torch cutting of roof specialties is not permitted.
5. Do not use graphite pencils to mark metal surfaces.

B. Metal Protection: Protect metals against galvanic action by separating dissimilar metals from contact with each other or with corrosive substrates by painting contact surfaces with bituminous coating or by other permanent separation as recommended by manufacturer.

1. Coat concealed side of stainless-steel roof specialties with bituminous coating where in contact with wood, ferrous metal, or cementitious construction.
2. Bed flanges in thick coat of asphalt roofing cement where required by manufacturers of roof specialties for waterproof performance.

C. Expansion Provisions: Allow for thermal expansion of exposed roof specialties.

1. Space movement joints at a maximum of 12 feet (3.6 m) with no joints within 18 inches (450 mm) of corners or intersections unless otherwise indicated on Drawings.
2. When ambient temperature at time of installation is between 40 and 70 deg F (4 and 21 deg C), set joint members for 50 percent movement each way. Adjust setting proportionately for installation at higher ambient temperatures.

D. Fastener Sizes: Use fasteners of sizes that penetrate wood blocking or sheathing not less than 1-1/4 inches (32 mm) for nails and not less than 3/4 inch (19 mm) for wood screws, or substrate not less than recommended by fastener manufacturer to achieve maximum pull-out resistance.

E. Seal concealed joints with butyl sealant as required by roofing-specialty manufacturer.

F. Seal joints as required for weathertight construction. Place sealant to be completely concealed in joint. Do not install sealants at temperatures below 40 deg F (4 deg C).

G. Soldered Joints: Clean surfaces to be soldered, removing oils and foreign matter. Pre-tin edges of sheets to be soldered to a width of 1-1/2 inches (38 mm); however, reduce pre-tinning where pre-tinned surface would show in completed Work. Tin edges of uncoated copper sheets using solder for copper. Do not use torches for soldering. Heat surfaces to receive solder and flow solder into joint. Fill joint completely. Completely remove flux and spatter from exposed surfaces.

3.4 COPING INSTALLATION

A. Install cleats, anchor plates, and other anchoring and attachment accessories and devices with concealed fasteners.

B. Anchor copings with manufacturer's required devices, fasteners, and fastener spacing to meet performance requirements.

1. Interlock face and back leg drip edges of snap-on coping cap into cleated anchor plates anchored to substrate at manufacturer's required spacing that meets performance requirements.

3.5 ROOF-EDGE SPECIALITIES INSTALLATION

A. Install cleats, cants, and other anchoring and attachment accessories and devices with concealed fasteners.

B. Anchor roof edgings with manufacturer's required devices, fasteners, and fastener spacing to meet performance requirements.

3.6 ROOF-EDGE DRAINAGE-SYSTEM INSTALLATION

A. General: Install components to produce a complete roof-edge drainage system according to manufacturer's written instructions. Coordinate installation of roof perimeter flashing with installation of roof-edge drainage system.

B. Gutters: Join and seal gutter lengths. Allow for thermal expansion. Attach gutters to firmly anchored gutter supports spaced not more than 24 inches (610 mm) apart. Attach ends with rivets and seal with sealant or solder to make watertight. Slope to downspouts.

1. Install gutter with expansion joints at locations indicated but not exceeding 50 feet (15.2 m) apart. Install expansion-joint caps.

C. Downspouts: Join sections with manufacturer's standard telescoping joints. Provide hangers with fasteners designed to hold downspouts securely to walls and 1 inch (25 mm) away from walls; locate fasteners at top and bottom and at approximately 60 inches (1500 mm) o.c.

1. Connect downspouts to underground drainage system indicated, unless otherwise indicated.
2. Where indicated, provide elbows at base of downspouts at grade to direct water away from building.

D. Splash Pans: Install where downspouts discharge on low-slope roofs. Set in elastomeric sealant.

E. Parapet Scuppers: Install scuppers through parapet where indicated. Continuously support scupper, set to correct elevation, and seal flanges to interior wall face, over cants or tapered edge strips, and under roofing membrane.

1. Anchor scupper closure trim flange to exterior wall and seal or solder to scupper.
2. At conductor heads, loosely lock front edge of scupper with conductor head.
3. At overflow scuppers, seal or solder exterior wall scupper flanges into back of conductor head.

F. Conductor Heads: Install integral scupper as indicated for parapet scuppers. Anchor conductor head securely to wall. Seal top and sides of conductor head to wall.

3.7 COUNTERFLASHING INSTALLATION

A. General: Coordinate installation of counterflashings with installation of base flashings.

B. Counterflashings: Insert counterflashings into receivers; ensure that counterflashings overlap 4 inches (100 mm) over top edge of base flashings. Lap counterflashing joints a minimum of 4 inches (100 mm) and bed with butyl sealant. Fit counterflashings tightly to base flashings.

3.8 CLEANING AND PROTECTION

A. Clean exposed metal surfaces of substances that interfere with uniform oxidation and weathering.

B. Clean and neutralize flux materials. Clean off excess solder and sealants.

C. Remove temporary protective coverings and strippable films as roof specialties are installed. On completion of installation, clean finished surfaces, including removing unused fasteners, metal filings, pop rivet stems, and pieces of flashing. Maintain roof specialties in a clean condition during construction.

D. Replace roof specialties that have been damaged or that cannot be successfully repaired by finish touchup or similar minor repair procedures.

END OF SECTION 077100

SECTION 077200 - ROOF ACCESSORIES

PART 1 - GENERAL

1.1 RELATED DOCUMENTS

A. Drawings and general provisions of the Contract, including General and Supplementary Conditions and Division 01 Specification Sections, apply to this Section.

1.2 SUMMARY

A. Section Includes:

1. Roof curbs.
2. Equipment supports.
3. Roof hatches.
4. Preformed flashing sleeves.

B. Related Sections:

1. Section 076200 "Sheet Metal Flashing and Trim" for shop- and field-formed metal flashing, roof-drainage systems, roof expansion-joint covers, and miscellaneous sheet metal trim and accessories.
2. Section 077253 "Snow Retention System, Mechanically Fastened" for snow guards.

1.3 COORDINATION

A. Coordinate layout and installation of roof accessories with roofing membrane and base flashing and interfacing and adjoining construction to provide a leakproof, weathertight, secure, and noncorrosive installation.

B. Coordinate dimensions with rough-in information or Shop Drawings of equipment to be supported.

1.4 ACTION SUBMITTALS

A. Product Data: For each type of roof accessory.

1. Include construction details, material descriptions, dimensions of individual components and profiles, and finishes.

B. Shop Drawings: For roof accessories.

1. Include plans, elevations, keyed details, and attachments to other work. Indicate dimensions, loadings, and special conditions. Distinguish between plant- and field-assembled work.

PART 2 - PRODUCTS

2.1 PERFORMANCE REQUIREMENTS

A. General Performance: Roof accessories shall withstand exposure to weather and resist thermally induced movement without failure, rattling, leaking, or fastener disengagement due to defective manufacture, fabrication, installation, or other defects in construction.

2.2 ROOF CURBS

A. Roof Curbs: Internally reinforced roof-curb units capable of supporting superimposed live and dead loads, including equipment loads and other construction indicated on Drawings, bearing continuously on roof structure, and capable of meeting performance requirements; with welded or mechanically fastened and sealed corner joints, stepped integral metal cant raised the thickness of roof insulation, and integrally formed deck-mounting flange at perimeter bottom.

1. Manufacturers: Subject to compliance with requirements, available manufacturers offering products that may be incorporated into the Work include, but are not limited to the following:

a. Curbs Plus, Inc.
b. Greenheck Fan Corporation.
c. LMCurbs.
d. Pate Company (The).
e. Roof Products, Inc.
f. Thybar Corporation.
g. Vent Products Co., Inc.
h. Manufacturer recommending in writing by rooftop equipment manufacturer, as acceptable to roofing manufacturer.

B. Size: Coordinate dimensions with roughing-in information or Shop Drawings of equipment to be supported.

C. Supported Load Capacity: As required by supported equipment, including safety factors, plus 25 percent.

D. Material: Zinc-coated (galvanized) steel sheet, 0.079 inch (2.01 mm) thick.

1. Finish: Factory prime coating.

E. Construction:

1. Curb Profile: Manufacturer's standard compatible with roofing system.
2. On ribbed or fluted metal roofs, form deck-mounting flange at perimeter bottom to conform to roof profile.
3. Fabricate curbs to minimum height of 12 inches (305 mm) above roofing surface unless otherwise indicated.
4. Top Surface: Level top of curb, with roof slope accommodated by sloping deck-mounting flange or by use of leveler frame.
5. Sloping Roofs: Where roof slope exceeds 1:48, fabricate curb with perimeter curb height tapered to accommodate roof slope so that top surface of perimeter curb is level. Equip unit with water diverter or cricket on side that obstructs water flow.
6. Insulation: Factory insulated with 1-1/2-inch- (38-mm-) thick glass-fiber or polyisocyanurate board insulation.
7. Liner: Same material as curb, of manufacturer's standard thickness and finish.

8. Nailer: Factory-installed wood nailer along top flange of curb, continuous around curb perimeter.
9. Metal Counterflashing: Manufacturer's standard, removable, fabricated of same metal and finish as curb.

2.3 EQUIPMENT SUPPORTS

A. Equipment Supports: Internally reinforced perimeter metal equipment supports capable of supporting superimposed live and dead loads between structural supports, including equipment loads and other construction indicated on Drawings, spanning between structural supports; capable of meeting performance requirements; with welded or mechanically fastened and sealed corner joints, stepped integral metal cant raised the thickness of roof insulation, and integrally formed structure-mounting flange at bottom.

1. Manufacturers: Subject to compliance with requirements, provide products by one of the following:

   a. Curbs Plus, Inc.
   b. Greenheck Fan Corporation.
   c. LMCurbs.
   d. Pate Company (The).
   e. Roof Products, Inc.
   f. Thybar Corporation.
   g. Vent Products Co., Inc.

B. Size: Coordinate dimensions with roughing-in information or Shop Drawings of equipment to be supported.

C. Material: Zinc-coated (galvanized) steel sheet, 0.079 inch (2.01 mm) thick.

1. Finish: Factory prime coating.

D. Construction:

1. Curb Profile: Manufacturer's standard compatible with roofing system.
2. Insulation: Factory insulated with 1-1/2-inch- (38-mm-) thick glass-fiber board insulation.
3. Liner: Same material as equipment support, of manufacturer's standard thickness and finish.
4. Nailer: Factory-installed continuous wood nailers 3-1/2 inches (90 mm) wide on top flange of equipment supports, continuous around support perimeter.
5. Platform Cap: Where portion of equipment support is not covered by equipment, provide weathertight platform cap formed from 3/4-inch (19-mm) thick plywood covered with metal sheet of same type, thickness, and finish as required for curb.
6. Metal Counterflashing: Manufacturer's standard, removable, fabricated of same metal and finish as equipment support.
7. On ribbed or fluted metal roofs, form deck-mounting flange at perimeter bottom to conform to roof profile.
8. Fabricate equipment supports to minimum height of 12 inches (305 mm) above roofing surface unless otherwise indicated.

2.4 ROOF HATCH

A. Roof Hatches: Metal roof-hatch units with lids and insulated double-walled curbs, welded or mechanically fastened and sealed corner joints, continuous lid-to-curb counterflashing and weathertight

perimeter gasketing, stepped integral metal cant raised the thickness of roof insulation, and integrally formed deck-mounting flange at perimeter bottom.

1. Products: Subject to compliance with requirements, available products that may be incorporated into the Work include, but are not limited to the following:

    a. Babcock-Davis; Energy Efficient Roof Hatch (BRHPA30X96S1T-IRR).
    b. Bilco Company (The); Thermall Broken Roof Hatch L-50TB.
    c. Lexcor; a division of Luxsuco corp.; R-120A Roof Hatch.
    d. Milcor; Commercial Products Group of Hart & Cooley, Inc.; Energy Efficient Roof Hatch RD-3 EE.

B. Type and Size: Single-leaf lid, 30 by 96 inches (750 by 2440 mm).

C. Loads: Minimum 40-lbf/sq. ft. (1.9-kPa) external live load and 20-lbf/sq. ft. (0.95-kPa) internal uplift load.

D. Hatch Material: Aluminum sheet.

1. Thickness: Manufacturer's standard thickness for hatch size indicated.
2. Finish: Mill.

E. Construction:

1. Insulation: Polyisocyanurate board.

    a. R-Value: 12.0 according to ASTM C 1363.

2. Nailer: Factory-installed wood nailer continuous around hatch perimeter.
3. Hatch Lid: Opaque, insulated, and double walled, with manufacturer's standard metal liner of same material and finish as outer metal lid.
4. Curb Liner: Manufacturer's standard, of same material and finish as metal curb.
5. On ribbed or fluted metal roofs, form flange at perimeter bottom to conform to roof profile.
6. Fabricate curbs to minimum height of 12 inches (305 mm) above roofing surface unless otherwise indicated.

F. Hardware: Spring operators, hold-open arm, galvanized-steel spring latch with turn handles, galvanized-steel butt- or pintle-type hinge system, and padlock hasps inside and outside.

1. Provide two-point latch on lids larger than 84 inches (2130 mm).

G. Safety Railing System: Roof-hatch manufacturer's standard system including rails, clamps, fasteners, safety barrier at railing opening, and accessories required for a complete installation; attached to roof hatch and complying with 29 CFR 1910.23 requirements and authorities having jurisdiction.

1. Height: 42 inches (1060 mm) above finished roof deck.
2. Posts and Rails: Galvanized-steel pipe, 1-1/4 inches (31 mm) in diameter or galvanized-steel tube, 1-5/8 inches (41 mm) in diameter.
3. Flat Bar: Galvanized steel, 2 inches (50 mm) high by 3/8 inch (9 mm) thick.
4. Maximum Opening Size: System constructed to prevent passage of a sphere 21 inches (533 mm) in diameter.
5. Self-Latching Gate: Fabricated of same materials and rail spacing as safety railing system. Provide manufacturer's standard hinges and self-latching mechanism.
6. Post and Rail Tops and Ends: Weather resistant, closed or plugged with prefabricated end fittings.

7. Provide weep holes or another means to drain entrapped water in hollow sections of handrail and railing members.
8. Fabricate joints exposed to weather to be watertight.
9. Fasteners: Manufacturer's standard, finished to match railing system.
10. Finish: Manufacturer's standard.

    a. Color: Safety yellow.

2.5 PREFORMED FLASHING SLEEVES

A. Vent Stack Flashing: Metal flashing sleeve, uninsulated, with integral deck flange.

1. Manufacturers: Subject to compliance with requirements, provide products by one of the following:

    a. Custom Solution Roof and Metal Products.
    b. Miclor, Inc., Commercial Products Group of Hart & Cooley, Inc.
    c. Thaler Metal USA, Inc.

2. Metal: Aluminum sheet, 0.063 inch (1.60 mm) thick.
3. Height: As indicated.
4. Diameter: As indicated on Drawings.
5. Finish: Manufacturer's standard.

2.6 METAL MATERIALS

A. Zinc-Coated (Galvanized) Steel Sheet: ASTM A 653/A 653M, G90 (Z275) coating designation and mill phosphatized for field painting where indicated.

1. Mill-Phosphatized Finish: Manufacturer's standard for field painting.
2. Factory Prime Coating: Where field painting is indicated, apply pretreatment and white or light-colored, factory-applied, baked-on epoxy primer coat, with a minimum dry film thickness of 0.2 mil (0.005 mm).

B. Aluminum Sheet: ASTM B 209 (ASTM B 209M), manufacturer's standard alloy for finish required, with temper to suit forming operations and performance required.

1. Mill Finish: As manufactured.
2. Factory Prime Coating: Where field painting is indicated, apply pretreatment and white or light-colored, factory-applied, baked-on epoxy primer coat, with a minimum dry film thickness of 0.2 mil (0.005 mm).
3. Concealed Finish: Pretreat with manufacturer's standard white or light-colored acrylic or polyester-backer finish consisting of prime coat and wash coat, with a minimum total dry film thickness of 0.5 mil (0.013 mm).

C. Aluminum Extrusions and Tubes: ASTM B 221 (ASTM B 221M), manufacturer's standard alloy and temper for type of use, finished to match assembly where used; otherwise mill finished.

D. Stainless-Steel Sheet and Shapes: ASTM A 240/A 240M or ASTM A 666, Type 304.

E. Steel Shapes: ASTM A 36/A 36M, hot-dip galvanized according to ASTM A 123/A 123M unless otherwise indicated.

F. Galvanized-Steel Tube: ASTM A 500/A 500M, round tube, hot-dip galvanized according to ASTM A 123/A 123M.

G. Steel Pipe: ASTM A 53/A 53M, galvanized.

2.7 MISCELLANEOUS MATERIALS

A. General: Provide materials and types of fasteners, protective coatings, sealants, and other miscellaneous items required by manufacturer for a complete installation.

B. Cellulosic-Fiber Board Insulation: ASTM C 208, Type II, Grade 1, thickness as indicated.

C. Glass-Fiber Board Insulation: ASTM C 726, nominal density of 3 lb/cu. ft. (48 kg/cu. m), thermal resistivity of 4.3 deg F x h x sq. ft./Btu x in. at 75 deg F (29.8 K x m/W at 24 deg C), thickness as indicated.

D. Polyisocyanurate Board Insulation: ASTM C 1289, thickness and thermal resistivity as indicated.

E. Wood Nailers: Softwood lumber, pressure treated with waterborne preservatives for aboveground use, acceptable to authorities having jurisdiction, containing no arsenic or chromium, and complying with AWPA C2; not less than 1-1/2 inches (38 mm) thick.

F. Bituminous Coating: Cold-applied asphalt emulsion complying with ASTM D 1187/D 1187M.

G. Underlayment:

1. Felt: ASTM D 226/D 226M, Type II (No. 30), asphalt-saturated organic felt, nonperforated.
2. Polyethylene Sheet: 6-mil- (0.15-mm-) thick polyethylene sheet complying with ASTM D 4397.

H. Fasteners: Roof accessory manufacturer's recommended fasteners suitable for application and metals being fastened. Match finish of exposed fasteners with finish of material being fastened. Provide nonremovable fastener heads to exterior exposed fasteners. Furnish the following unless otherwise indicated:

1. Fasteners for Zinc-Coated or Aluminum-Zinc Alloy-Coated Steel: Series 300 stainless steel or hot-dip zinc-coated steel according to ASTM A 153/A 153M or ASTM F 2329.
2. Fasteners for Aluminum Sheet: Aluminum or Series 300 stainless steel.
3. Fasteners for Stainless-Steel Sheet: Series 300 stainless steel.

I. Gaskets: Manufacturer's standard tubular or fingered design of neoprene, EPDM, PVC, or silicone or a flat design of foam rubber, sponge neoprene, or cork.

J. Elastomeric Sealant: ASTM C 920, elastomeric silicone polymer sealant as recommended by roof accessory manufacturer for installation indicated; low modulus; of type, grade, class, and use classifications required to seal joints and remain watertight.

K. Asphalt Roofing Cement: ASTM D 4586/D 4586M, asbestos free, of consistency required for application.

2.8 GENERAL FINISH REQUIREMENTS

A. Comply with NAAMM's "Metal Finishes Manual for Architectural and Metal Products" for recommendations for applying and designating finishes.

B. Appearance of Finished Work: Noticeable variations in same piece are not acceptable. Variations in appearance of adjoining components are acceptable if they are within the range of approved Samples and are assembled or installed to minimize contrast.

PART 3 - EXECUTION

3.1 EXAMINATION

A. Examine substrates, areas, and conditions, with Installer present, to verify actual locations, dimensions, and other conditions affecting performance of the Work.

B. Verify that substrate is sound, dry, smooth, clean, sloped for drainage, and securely anchored.

C. Verify dimensions of roof openings for roof accessories.

D. Proceed with installation only after unsatisfactory conditions have been corrected.

3.2 INSTALLATION

A. General: Install roof accessories according to manufacturer's written instructions.

1. Install roof accessories level; plumb; true to line and elevation; and without warping, jogs in alignment, buckling, or tool marks.
2. Anchor roof accessories securely in place so they are capable of resisting indicated loads.
3. Use fasteners, separators, sealants, and other miscellaneous items as required to complete installation of roof accessories and fit them to substrates.
4. Install roof accessories to resist exposure to weather without failing, rattling, leaking, or loosening of fasteners and seals.

B. Metal Protection: Protect metals against galvanic action by separating dissimilar metals from contact with each other or with corrosive substrates by painting contact surfaces with bituminous coating or by other permanent separation as recommended by manufacturer.

1. Coat concealed side of uncoated aluminum roof accessories with bituminous coating where in contact with wood, ferrous metal, or cementitious construction.
2. Underlayment: Where installing roof accessories directly on cementitious or wood substrates, install a course of underlayment and cover with manufacturer's recommended slip sheet.
3. Bed flanges in thick coat of asphalt roofing cement where required by manufacturers of roof accessories for waterproof performance.

C. Roof Curb Installation: Install each roof curb so top surface is level.

D. Equipment Support Installation: Install equipment supports so top surfaces are level with each other.

E. Roof-Hatch Installation:

1. Verify that roof hatch operates properly. Clean, lubricate, and adjust operating mechanism and hardware.
2. Attach safety railing system to roof-hatch curb.
3. Attach ladder-assist post according to manufacturer's written instructions.

F. Preformed Flashing-Sleeve Installation: Secure flashing sleeve to roof membrane according to flashing-sleeve manufacturer’s written instructions.

G. Seal joints with elastomeric sealant as required by roof accessory manufacturer.

3.3 REPAIR AND CLEANING

A. Galvanized Surfaces: Clean field welds, bolted connections, and abraded areas and repair galvanizing according to ASTM A 780/A 780M.

B. Touch up factory-primed surfaces with compatible primer ready for field painting according to Section 099113 "Exterior Painting."

C. Clean exposed surfaces according to manufacturer's written instructions.

D. Clean off excess sealants.

E. Replace roof accessories that have been damaged or that cannot be successfully repaired by finish touchup or similar minor repair procedures.

END OF SECTION 077200

SECTION 077253 - SNOW GUARDS

PART 1 - GENERAL

1.1 RELATED DOCUMENTS

A. Drawings and general provisions of the Contract, including General and Supplementary Conditions and Division 01 Specification Sections, apply to this Section.

1.2 SUMMARY

A. Section Includes:

1. Rail-type, seam-mounted snow guards.

1.3 ACTION SUBMITTALS

A. Product Data: Include construction details, material descriptions, dimensions of individual components and profiles, and finishes for snow guards.

B. Shop Drawings: Include roof plans showing layouts and attachment details of snow guards.

1. Include details of rail-type snow guards.
2. Include calculation of number and location of snow guards based on snow load, roof slope, roof type, components, spacings, and finish.

C. Samples: Base, bracket, and 12-inch- (300-mm-) long rail.

1.4 INFORMATIONAL SUBMITTALS

A. Product Test Reports: For each type of snow guard, for tests performed by manufacturer and witnessed by a qualified testing agency.

PART 2 - PRODUCTS

2.1 PERFORMANCE REQUIREMENTS

A. Performance Requirements: Provide snow guards that withstand exposure to weather and resist thermally induced movement without failure, rattling, or fastener disengagement due to defective manufacture, fabrication, installation, or other defects in construction.

1. Temperature Change: 120 deg F (67 deg C), ambient; 180 deg F (100 deg C), material surfaces.

B. Structural Performance:

1. Snow Loads: As indicated on Drawings.

2.2 RAIL-TYPE SNOW GUARDS

A. Seam-Mounted, Rail-Type Snow Guards:

1. Basis-of-Design Product: Subject to compliance with requirements, provide Sno Gem; Sno Blockade 1" or a comparable product by one of the following:

   a. Equivalent product recommended in writing by roofing manufacturer.
   b. Metal Roof Innovations, Ltd.; S-5! Color Guard.

2. Description: Snow guard rails fabricated from metal pipes, bars, or extrusions, anchored to brackets and equipped with one rail.
3. Material and Finish: Aluminum; finish and color to match standing-seam metal roof panels.

PART 3 - EXECUTION

3.1 EXAMINATION

A. Examine substrates and conditions, with Installer present, for compliance with requirements for installation tolerances, snow guard attachment, and other conditions affecting performance of the Work.

1. Verify compatibility with and suitability of substrates including compatibility with existing finishes or primers.

B. Proceed with installation only after unsatisfactory conditions have been corrected.

3.2 PREPARATION

A. Clean and prepare substrates for bonding snow guards.

B. Prime substrates according to snow guard manufacturer's written instructions.

3.3 INSTALLATION

A. Install snow guards according to manufacturer's written instructions. Space rows as recommended by manufacturer.

B. Attachment for Standing-Seam Metal Roofing:

1. Do not use fasteners that will penetrate metal roofing, or fastening methods that void metal roofing finish warranty.
2. Seam-Mounted, Rail-Type Snow Guards: Stainless-steel clamps attached to vertical ribs of standing-seam metal roof panels.

END OF SECTION 077253

SECTION 07 84 13
PENETRATION FIRESTOPPING

PART 1 GENERAL

1.01 SECTION INCLUDES

A. Firestopping systems.

B. Firestopping of all joints and penetrations in fire-resistance rated and smoke-resistant assemblies, whether indicated on drawings or not, and other openings indicated.

1.02 RELATED REQUIREMENTS

A. Section 01 61 16 - Volatile Organic Compound (VOC) Content Restrictions.

B. Section 01 78 39 - Construction Waste Management and Disposal: Limitations on disposal of removed materials; requirements for recycling.

C. Section 01 81 19 Construction IAQ Mgmt

D. Section 01 70 00 - Execution and Closeout Requirements: Cutting and patching.

E. Section 09 21 16 - Gypsum Board Assemblies: Gypsum wallboard fireproofing.

1.03 REFERENCE STANDARDS

A. ASTM E119 - Standard Test Methods for Fire Tests of Building Construction and Materials.

B. ASTM E814 - Standard Test Method for Fire Tests of Penetration Firestop Systems.

C. ITS (DIR) - Directory of Listed Products.

D. FM 4991 - Approval Standard for Firestop Contractors.

E. FM P7825 - Approval Guide; Factory Mutual Research Corporation.

F. SCAQMD 1168 - South Coast Air Quality Management District Rule No.1168.

G. UL (FRD) - Fire Resistance Directory.

1.04 SUBMITTALS

A. See Section 01 33 00 - Administrative Requirements, for submittal procedures.

B. Schedule of Firestopping: List each type of penetration, fire rating of the penetrated assembly, and firestopping test or design number.

C. Product Data: Provide data on product characteristics, performance ratings, and limitations.

D. LEED Report: Submit VOC content documentation for all non-preformed materials.

E. Manufacturer's Installation Instructions: Indicate preparation and installation instructions.

F. Manufacturer's Certificate: Certify that products meet or exceed specified requirements.

G. Certificate from authority having jurisdiction indicating approval of materials used.

H. Qualification statements for installing mechanics.

1.05 QUALITY ASSURANCE

A. Fire Testing: Provide firestopping assemblies of designs that provide the scheduled fire ratings when tested in accordance with methods indicated.

1. Listing in the current-year classification or certification books of UL, FM, or ITS (Warnock Hersey) will be considered as constituting an acceptable test report.
2. Valid evaluation report published by ICC Evaluation Service, Inc. (ICC-ES) at www.icc-es.org will be considered as constituting an acceptable test report.
3. Submission of actual test reports is required for assemblies for which none of the above substantiation exists.

B. Manufacturer Qualifications: Company specializing in manufacturing the products specified in this section with minimum ten years documented experience.

C. Installer Qualifications: Company specializing in performing the work of this section and:
   1. Approved by Factory Mutual Research under FM Standard 4991, Approval of Firestop Contractors, or meeting any two of the following requirements:.
   2. With minimum 5 years documented experience installing work of this type.
   3. Able to show at least 3 satisfactorily completed projects of comparable size and type.
   4. Licensed by authority having jurisdiction.
   5. Approved by firestopping manufacturer.

D. Installing Mechanic's Qualifications: Trained by firestopping manufacturer and able to provide evidence thereof.

1.06 MOCK-UP

A. Install one firestopping assembly representative of each fire rating design required on project.
   1. Where one design may be used for different penetrating items or in different wall constructions, install one assembly for each different combination.
   2. Where firestopping is intended to fill a linear opening, install minimum of 2 linear ft.

B. Obtain approval of authority having jurisdiction before proceeding.

C. If accepted, mock-up will represent minimum standard for the Work.

D. If accepted, mock-up may remain as part of the Work. Remove and replace mock-ups not accepted.

1.07 FIELD CONDITIONS

A. Comply with firestopping manufacturer's recommendations for temperature and conditions during and after installation. Maintain minimum temperature before, during, and for 3 days after installation of materials.

B. Provide ventilation in areas where solvent-cured materials are being installed.

PART 2 PRODUCTS

2.01 FIRESTOPPING - GENERAL REQUIREMENTS

A. Manufacturers:
   1. A/D Fire Protection Systems Inc: www.adfire.com.
   2. 3M Fire Protection Products: www.3m.com/firestop.
   3. Hilti, Inc: www.us.hilti.com.
   4. Nelson FireStop Products: www.nelsonfirestop.com.

B. Firestopping Materials with Volatile Content: Provide only products having lower volatile organic compound (VOC) content than required by South Coast Air Quality Management District Rule No.1168.

C. Primers, Sleeves, Forms, Insulation, Packing, Stuffing, and Accessories: Type required for tested assembly design.

2.02 FIRESTOPPING ASSEMBLY REQUIREMENTS

A. Through Penetration Firestopping: Use any system that has been tested according to ASTM E814 to have fire resistance F Rating equal to required fire rating of penetrated assembly.
   1. Temperature Rise: In addition, provide systems that have been tested to show T Rating as indicated.
   2. Air Leakage: In addition, provide systems that have been tested to show L Rating as indicated.
   3. Listing by UL, FM, or Intertek in their certification directory will be considered evidence of successful testing.

2.03 FIRESTOPPING PENETRATIONS THROUGH CONCRETE AND CONCRETE MASONRY CONSTRUCTION

A. Blank Openings:
   1. In Walls:
      a. 2 Hour Construction: UL System C-AJ-0090; Hilti FS-ONE Intumescent Firestop Sealant.

B. Penetrations Through Walls By:
   1. Multiple Penetrations in Large Openings:
      a. 2 Hour Construction: UL System C-AJ-8143; Hilti FS-ONE Intumescent Firestop Sealant.
   2. Uninsulated Metallic Pipe, Conduit, and Tubing:
      a. 2 Hour Construction: UL System C-AJ-1421; Hilti FS-ONE Intumescent Firestop Sealant or CP 604 Self-Leveling Firestop Sealant.
      b. 2 Hour Construction: UL System C-AJ-1498; Hilti CP 680-P/M Cast-In Device.
   3. Uninsulated Non-Metallic Pipe, Conduit, and Tubing:
      a. 2 Hour Construction: UL System C-AJ-2109; Hilti CP 643N/644 Firestop Collar.
      b. 2 Hour Construction: UL System C-BJ-2021; Hilti CP 643N Firestop Collar.
   4. Electrical Cables Not In Conduit:
      a. 2 Hour Construction: UL System C-AJ-3216; Hilti CP 658 Firestop Plug.
      b. 2 Hour Construction: UL System W-J-3198; Hilti CFS-SL RK Retrofit Sleeve Kit for existing cables.
      c. 2 Hour Construction: UL System W-J-3199; Hilti CFS-SL SK Firestop Sleeve Kit.
   5. Cable Trays with Electrical Cables:
      a. 3 Hour Construction: UL System C-AJ-4035; Hilti FS-ONE Intumescent Firestop Sealant.
   6. Insulated Pipes:
      a. 2 Hour Construction: UL System C-AJ-5048; Hilti FS-ONE Intumescent Firestop Sealant, CP 606 Flexible Firestop Sealant, CP 601S Elastomeric Firestop Sealant, or CP 604 Self-Leveling Firestop Sealant.
   7. HVAC Ducts, Uninsulated:
      a. 2 Hour Construction: UL System C-AJ-7111; Hilti FS-ONE Intumescent Firestop Sealant.
      b. 2 Hour Construction: UL System C-AJ-7084; Hilti FS-ONE Intumescent Firestop Sealant, CP 606 Flexible Firestop Sealant, CP 601S Elastomeric Firestop Sealant, or CP 604 Self-Leveling Firestop Sealant.

C. Penetrations Through Walls By:
   1. Uninsulated Metallic Pipe, Conduit, and Tubing:
      a. 2 Hour Construction: UL System W-J-1067; Hilti FS-ONE Intumescent Firestop Sealant.
   2. Electrical Cables Not In Conduit:
      a. 2 Hour Construction: UL System W-J-3060; Hilti FS-ONE Intumescent Firestop Sealant, CP 606 Flexible Firestop Sealant, CD 601S Elastomeric Firestop Sealant, or CP 618 Firestop Putty Stick.
      b. 2 Hour Construction: UL System W-J-3143; Hilti CP 658T Firestop Plug.
   3. Insulated Pipes:
      a. 2 Hour Construction: UL System W-J-5041; Hilti FS-ONE Intumescent Firestop Sealant.
      b. 2 Hour Construction: UL System W-J-5042; Hilti FS-ONE Intumescent Firestop Sealant.

c. 2 Hour Construction: UL System W-J-5028; Hilti FS-ONE Intumescent Firestop Sealant.

4. HVAC Ducts, Uninsulated:
   a. 2 Hour Construction: UL System W-J-7109; Hilti FS-ONE Intumescent Firestop Sealant or CP 606 Flexible Firestop Sealant.
5. HVAC Ducts, Insulated:
   a. 2 Hour Construction: UL System W-J-7112; Hilti FS-ONE Intumescent Firestop Sealant.

2.04 FIRESTOPPING PENETRATIONS THROUGH GYPSUM BOARD WALLS

A. Blank Openings:
   1. 2 Hour Construction: UL System W-L-3334; Hilti CP 653 Speed Sleeve.

B. Penetrations By:
   1. Multiple Penetrations in Large Openings:
      a. 2 Hour Construction: UL System W-L-1389; Hilti FS-ONE Intumescent Firestop Sealant.
      b. 2 Hour Construction: UL System W-L-1408; Hilti FS-ONE Intumescent Firestop Sealant.
      c. 2 Hour Construction: UL System W-L-8071; Hilti FS-ONE Intumescent Firestop Sealant.
      d. 2 Hour Construction: UL System W-L-8079; Hilti FS-ONE Intumescent Firestop Sealant.
      e. 2 Hour Construction: UL System W-L-8087; Hilti FS 657 Fire Block.
   2. Uninsulated Metallic Pipe, Conduit, and Tubing:
      a. 2 Hour Construction: UL System W-L-1054; Hilti FS-ONE Intumescent Firestop Sealant.
      b. 2 Hour Construction: UL System W-L-1164; Hilti FS-ONE Intumescent Firestop Sealant.
      c. 2 Hour Construction: UL System W-L-1206; Hilti FS-ONE Intumescent Firestop Sealant.
   3. Uninsulated Non-Metallic Pipe, Conduit, and Tubing:
      a. 2 Hour Construction: UL System W-L-2078; Hilti CP 643N/644 Firestop Collar.
      b. 2 Hour Construction: UL System W-L-2411; Hilti CP 648-E Firestop Wrap Strip.
      c. 2 Hour Construction: UL System W-L-2128; Hilti FS-ONE Intumescent Firestop Sealant.
   4. Electrical Cables Not In Conduit:
      a. 2 Hour Construction: UL System W-L-3065; Hilti FS-ONE Intumescent Firestop Sealant, CP 606 Flexible Firestop Sealant, CD 601S Elastomeric Firestop Sealant, or CP 618 Firestop Putty Stick.
      b. 2 Hour Construction: UL System W-L-3334; Hilti CP 653 Speed Sleeve.
      c. 2 Hour Construction: UL System W-L-3393; Hilti CFS-SL RK Retrofit Sleeve Kit for existing cables.
      d. 2 Hour Construction: UL System W-L-3394; Hilti CFS-SL SK Firestop Sleeve Kit.
      e. 2 Hour Construction: UL System W-L-3395; Hilti CP653 Speed Sleeve.
   5. Cable Trays with Electrical Cables:
      a. 2 Hour Construction: UL System W-L-4011; Hilti FS 657 Fire Block.
      b. 2 Hour Construction: UL System W-L-4060; Hilti FS-ONE Intumescent Firestop Sealant.
   6. Insulated Pipes:
      a. 2 Hour Construction: UL System W-L-5028; Hilti FS-ONE Intumescent Firestop Sealant.

b. 2 Hour Construction: UL System W-L-5029; Hilti FS-ONE Intumescent Firestop Sealant.
c. 2 Hour Construction: UL System W-L-5096; Hilti FS-ONE Intumescent Firestop Sealant.
d. 2 Hour Construction: UL System W-L-5257; Hilti FS-ONE Intumescent Firestop Sealant, CP 606 Flexible Firestop Sealant, or CP 601S Elastomeric Firestop Sealant.
e. 2 Hour Construction: UL System W-L-5244; Hilti CP 648-E Firestop Wrap Strip.

7. HVAC Ducts, Insulated:
   a. 2 Hour Construction: UL System W-L-7156; Hilti FS-ONE Intumescent Firestop Sealant.

2.05 FIRESTOPPING SYSTEMS

A. Firestopping: Any material meeting requirements. Foam, caulk, putty or manufactured device.
   1. Fire Ratings: Use any system listed by UL, FM, or ITS (Warnock Hersey) or that has F Rating equal to fire rating of penetrated assembly and minimum T Rating of 0 and that meets all other specified requirements.
   2. Fire Ratings: See Drawings for required systems and ratings.

B. Firestopping at Uninsulated Metallic Pipe and Conduit Penetrations, of diameter 4 inches or less: Any material meeting requirements. Foam, caulk, putty or manufactured device.

C. Firestopping at Cable Tray Penetrations: Any material meeting requirements. Foam, caulk, putty or manufactured device.

D. Firestopping at Cable Penetrations, not in Conduit or Cable Tray: Any material meeting requirements. Foam, caulk, putty or manufactured device.

2.06 MATERIALS

A. Firestopping Sealants: Provide only products having lower volatile organic compound (VOC) content than required by South Coast Air Quality Management District Rule No.1168.

B. Elastomeric Silicone Firestopping: Single component silicone elastomeric compound and compatible silicone sealant.

C. Foam Firestoppping: Single component silicone foam compound.

D. Fibered Compound Firestopping: Formulated compound mixed with incombustible non-asbestos fibers.

E. Fiber Firestopping: Mineral fiber insulation used in conjunction with elastomeric surface sealer forming airtight bond to opening.

F. Primers, Sleeves, Forms, Insulation, Packing, Stuffing, and Accessories: Type required for tested assembly design.

PART 3 EXECUTION

3.01 EXAMINATION

A. Verify openings are ready to receive the work of this section.

3.02 PREPARATION

A. Clean substrate surfaces of dirt, dust, grease, oil, loose material, or other matter that could adversely affect bond of firestopping material.

B. Remove incompatible materials that could adversely affect bond.

C. Install backing materials to arrest liquid material leakage.

3.03 INSTALLATION

A. Install materials in manner described in fire test report and in accordance with manufacturer's instructions, completely closing openings.

B. Do not cover installed firestopping until inspected by authority having jurisdiction.

C. Install labeling required by code.

CLEANING

4.01 CLEAN ADJACENT SURFACES OF FIRESTOPPING MATERIALS.

4.02 PROTECTION

A. Clean adjacent surfaces of firestopping materials.

B. Protect adjacent surfaces from damage by material installation.

END OF SECTION

SECTION 078443 - JOINT FIRESTOPPING

PART 1 - GENERAL

1.1 RELATED DOCUMENTS

A. Drawings and general provisions of the Contract, including General and Supplementary Conditions and Division 01 Specification Sections, apply to this Section.

1.2 SUMMARY

A. Section Includes:

1. Joints in or between fire-resistance-rated constructions.
2. Joints in smoke barriers.

B. Related Requirements:

1. Section 078413 "Penetration Firestopping" for penetrations in fire-resistance-rated walls, horizontal assemblies, and smoke barriers.
2. Section 079513.13 "Interior Expansion Joint Cover Assemblies" for fire-resistive manufactured expansion-joint cover assemblies for interior floors, walls, and ceilings.

1.3 ACTION SUBMITTALS

A. Product Data: For each type of product.

B. Product Schedule: For each joint firestopping system. Include location, illustration of firestopping system, and design designation of qualified testing agency.

1. Engineering Judgments: Where Project conditions require modification to a qualified testing agency's illustration for a particular joint firestopping system condition, submit illustration, with modifications marked, approved by joint firestopping system manufacturer's fire-protection engineer as an engineering judgment or equivalent fire-resistance-rated assembly.

1.4 INFORMATIONAL SUBMITTALS

A. Qualification Data: For Installer.

B. Product Test Reports: For each joint firestopping system, for tests performed by a qualified testing agency.

1.5 CLOSEOUT SUBMITTALS

A. Installer Certificates: From Installer indicating that joint firestopping systems have been installed in compliance with requirements and manufacturer's written instructions.

1.6 QUALITY ASSURANCE

A. Installer Qualifications: A firm that has been approved by FM Global according to FM Global 4991, "Approval of Firestop Contractors," or been evaluated by UL and found to comply with UL's "Qualified Firestop Contractor Program Requirements."

1.7 PROJECT CONDITIONS

A. Environmental Limitations: Do not install joint firestopping systems when ambient or substrate temperatures are outside limits permitted by joint firestopping system manufacturers or when substrates are wet due to rain, frost, condensation, or other causes.

B. Install and cure joint firestopping systems per manufacturer's written instructions using natural means of ventilation or, where this is inadequate, forced-air circulation.

1.8 COORDINATION

A. Coordinate construction of joints to ensure that joint firestopping systems can be installed according to specified firestopping system design.

B. Coordinate sizing of joints to accommodate joint firestopping systems.

PART 2 - PRODUCTS

2.1 PERFORMANCE REQUIREMENTS

A. Fire-Test-Response Characteristics:

1. Perform joint firestopping system tests by a qualified testing agency acceptable to authorities having jurisdiction.
2. Test per testing standards referenced in "Joint Firestopping Systems" Article. Provide rated systems complying with the following requirements:

a. Joint firestopping systems shall bear classification marking of a qualified testing agency.

1) UL in its "Fire Resistance Directory."

2.2 JOINT FIRESTOPPING SYSTEMS

A. Joint Firestopping Systems: Systems that resist spread of fire, passage of smoke and other gases, and maintain original fire-resistance rating of assemblies in or between which joint firestopping systems are installed. Joint firestopping systems shall accommodate building movements without impairing their ability to resist the passage of fire and hot gases.

B. Joints in or between Fire-Resistance-Rated Construction: Provide joint firestopping systems with ratings determined per ASTM E 1966 or UL 2079.

1. Manufacturers: Subject to compliance with requirements, available manufacturers offering products that may be incorporated into the Work include, but are not limited to the following:

a. 3M Fire Protection Products.
b. Hilti, Inc.
c. ROCKWOOL (ROXUL Inc.).
d. Thermafiber, Inc.; an Owens Corning company.
e. Tremco, Inc.

2. Fire-Resistance Rating: Equal to or exceeding the fire-resistance rating of the wall, floor, or roof in or between which it is installed.

C. Exposed Joint Firestopping Systems: Flame-spread and smoke-developed indexes of less than 25 and 450, respectively, as determined per ASTM E 84.

D. Accessories: Provide components of fire-resistive joint systems, including primers and forming materials, that are needed to install elastomeric fill materials and to maintain ratings required. Use only components specified by joint firestopping system manufacturer and approved by the qualified testing agency for conditions indicated.

PART 3 - EXECUTION

3.1 EXAMINATION

A. Examine substrates and conditions, with Installer present, for compliance with requirements for joint configurations, substrates, and other conditions affecting performance of the Work.

B. Proceed with installation only after unsatisfactory conditions have been corrected.

3.2 PREPARATION

A. Surface Cleaning: Before installing fire-resistive joint systems, clean joints immediately to comply with fire-resistive joint system manufacturer's written instructions and the following requirements:

1. Remove from surfaces of joint substrates foreign materials that could interfere with adhesion of elastomeric fill materials or compromise fire-resistive rating.
2. Clean joint substrates to produce clean, sound surfaces capable of developing optimum bond with elastomeric fill materials. Remove loose particles remaining from cleaning operation.
3. Remove laitance and form-release agents from concrete.

B. Prime substrates where recommended in writing by joint firestopping system manufacturer using that manufacturer's recommended products and methods. Confine primers to areas of bond; do not allow spillage and migration onto exposed surfaces.

3.3 INSTALLATION

A. General: Install fire-resistive joint systems to comply with manufacturer's written installation instructions and published drawings for products and applications indicated.

B. Install forming materials and other accessories of types required to support elastomeric fill materials during their application and in position needed to produce cross-sectional shapes and depths required to achieve fire ratings indicated.

1. After installing elastomeric fill materials and allowing them to fully cure, remove combustible forming materials and other accessories not indicated as permanent components of fire-resistive joint system.

C. Install elastomeric fill materials for fire-resistive joint systems by proven techniques to produce the following results:

1. Elastomeric fill voids and cavities formed by joints and forming materials as required to achieve fire-resistance ratings indicated.
2. Apply elastomeric fill materials so they contact and adhere to substrates formed by joints.
3. For elastomeric fill materials that will remain exposed after completing the Work, finish to produce smooth, uniform surfaces that are flush with adjoining finishes.

3.4 IDENTIFICATION

A. Joint Identification: Identify joint firestopping systems with legible metal or plastic labels. Attach labels permanently to surfaces adjacent to and within 6 inches (150 mm) of joint edge so labels are visible to anyone seeking to remove or joint firestopping system. Use mechanical fasteners or self-adhering-type labels with adhesives capable of permanently bonding labels to surfaces on which labels are placed. Include the following information on labels:

1. The words "Warning - Joint Firestopping - Do Not Disturb. Notify Building Management of Any Damage."
2. Contractor's name, address, and phone number.
3. Designation of applicable testing agency.
4. Date of installation.
5. Manufacturer's name.
6. Installer's name.

3.5 FIELD QUALITY CONTROL

A. Inspecting Agency: Owner will engage a qualified testing agency to perform tests and inspections according to ASTM E 2393.

B. Where deficiencies are found or joint firestopping systems are damaged or removed due to testing, repair or replace joint firestopping systems so they comply with requirements.

C. Proceed with enclosing joint firestopping systems with other construction only after inspection reports are issued and installations comply with requirements.

3.6 CLEANING AND PROTECTION

A. Clean off excess elastomeric fill materials adjacent to joints as the Work progresses by methods and with cleaning materials that are approved in writing by joint firestopping system manufacturers and that do not damage materials in which joints occur.

B. Provide final protection and maintain conditions during and after installation that ensure joint firestopping systems are without damage or deterioration at time of Substantial Completion. If damage or deterioration occurs despite such protection, cut out and remove damaged or deteriorated fire-resistive joint systems immediately and install new materials to produce fire-resistive joint systems complying with specified requirements.

3.7 JOINT FIRESTOPPING SYSTEM SCHEDULE

A. Where UL-classified systems are indicated, they refer to system numbers in UL's "Fire Resistance Directory" under product Category XHBN.

B. Performance:

1. Assembly Rating: 1 hour.
2. L-Rating at Ambient and Elevated Temperature: Less than 5 cfm/ft. (0.00775cu. m/s x m) at 0.30 inch water (7.47 Pa)

C. Floor-to-Floor (Dynamic Joint), Joint Firestopping Systems:

1. UL-Classified Systems: FF-D- 0000-1999.
2. Movement Capabilities: Class II – 50 percent compression, extension, or horizontal shear.
3. W-Rating: No leakage of water at completion of water leakage testing.

D. Floor-to-Floor (Static Joint), Joint Firestopping Systems:

1. UL-Classified Systems: FF-S- 0000-1999.
2. W-Rating: No leakage of water at completion of water leakage testing.

E. Wall-to-Wall, Joint Firestopping Systems:

1. UL-Classified Systems: WW- S- 0000-0999.

F. Floor-to-Wall, Joint Firestopping Systems:

1. UL-Classified Systems: FW-D- 0000-1999.
2. Movement Capabilities: Class II – 50 percent compression or extension compression, extension, or horizontal shear.

G. Head-of-Wall, Fire-Resistive Joint Firestopping Systems:

1. UL-Classified Systems: HW-D-- 0000-1999.
2. Movement Capabilities: Class II – 50 percent compression or extension.

H. Bottom-of-Wall, Joint Firestopping Systems:

1. UL-Classified Systems: BW-S- 0000-0999.

END OF SECTION 078443

SECTION 079100 - PREFORMED JOINT SEALS

PART 1 - GENERAL

1.1 RELATED DOCUMENTS

A. Drawings and general provisions of the Contract, including General and Supplementary Conditions and Division 01 Specification Sections, apply to this Section.

1.2 SUMMARY

A. Section Includes:

1. Preformed, foam joint seals.

B. Related Requirements:

1. Section 079513.13 "Interior Expansion Joint Cover Assemblies."

1.3 ACTION SUBMITTALS

A. Product Data: For each preformed joint seal product.

B. Samples for Initial Selection: Manufacturer's color charts showing the full range of colors available for each product exposed to view.

C. Samples for Verification: For each type and color of preformed joint seal required, provide Samples with joint seals in 1/2-inch- (13-mm-) wide joints formed between two 6-inch- (150-mm-) long strips of material matching the appearance of exposed surfaces adjacent to joint seals.

1.4 INFORMATIONAL SUBMITTALS

A. Product Test Reports: For each preformed joint seal for tests performed by manufacturer and witnessed by a qualified testing agency.

PART 2 - PRODUCTS

2.1 PREFORMED, FOAM JOINT SEALS

A. Preformed, Foam Joint Seals (**EJ-1**): Manufacturer's standard joint seal manufactured from procured silicon with urethane or EVA (ethylene vinyl acetate) foam with minimum density of 10 lb/cu. ft. (160 kg/cu. m) and impregnated with a nondrying, water-repellent agent. Factory produce in precompressed sizes in roll or stick form to fit joint widths based on design criteria indicated, with factory- or field-applied adhesive for bonding to substrates.

1. Basis-of-Design Product: Subject to compliance with requirements, provide MM Systems Corporation; ESS-200 or a comparable product by one of the following:

a. Construction Specialties.
b. EMSEAL Joint Systems, Ltd.
c. Inpro Corporation.
d. Nystrom, Inc.
e. Sandell Manufacturing Co., Inc.

2. Design Criteria:

a. Nominal Joint Width: As indicated on Drawings.
b. Minimum Joint Width: As indicated on Drawings.
c. Maximum Joint Width: As indicated on Drawings.
d. Movement Capability: As indicated on Drawings.

3. Joint Seal Color: As selected by Architect from full range of industry colors.

2.2 MISCELLANEOUS MATERIALS

A. Primer: Material recommended by preformed-joint-seal manufacturer for joint substrates indicated.

B. Cleaners for Nonporous Surfaces: Chemical cleaners acceptable to preformed joint seal manufacturer, free of oily residues or other substances capable of staining or harming joint substrates and adjacent nonporous surfaces, and formulated to promote best adhesion to joint substrates.

C. Masking Tape: Nonstaining, nonabsorbent material compatible with preformed joint seals and surfaces adjacent to joints.

PART 3 - EXECUTION

3.1 EXAMINATION

A. Examine joints indicated to receive preformed joint seals, with Installer present, for compliance with requirements for joint configuration, installation tolerances, and other conditions affecting preformed-joint seal performance.

B. Proceed with installation only after unsatisfactory conditions have been corrected.

3.2 PREPARATION

A. Surface Cleaning of Joints: Clean out joints immediately before installing preformed joint seals to comply with preformed joint seal manufacturer's written instructions and the following requirements:

1. Remove all foreign material from joint substrates that could interfere with adhesion of preformed joint seal, including dust, paints (except for permanent protective coatings tested and approved for seal adhesion and compatibility by seal manufacturer), old joint sealants, oil, grease, waterproofing, water repellents, water, surface dirt, and frost.
2. Clean porous joint substrate surfaces by brushing, grinding, mechanical abrading, or a combination of these methods to produce a clean, sound substrate capable of developing optimal bond with preformed joint seals. Remove loose particles remaining after cleaning operations above by vacuuming or blowing out joints with oil-free compressed air. Porous joint substrates include the following:

a. Concrete.
b. Masonry.
c. Unglazed surfaces of ceramic tile.
d. Exterior insulation and finish systems.

3. Remove laitance and form-release agents from concrete.
4. Clean nonporous joint substrate surfaces with chemical cleaners or other means that do not stain, harm substrates, or leave residues capable of interfering with adhesion of joint seals. Nonporous joint substrates include the following:

a. Metal.
b. Glass.
c. Porcelain enamel.
d. Glazed surfaces of ceramic tile.

B. Joint Priming: Prime joint substrates where recommended by preformed joint seal manufacturer or as indicated by tests or prior experience. Apply primer to comply with joint seal manufacturer's written instructions. Confine primers to areas of joint seal bond; do not allow spillage or migration onto adjoining surfaces.

C. Masking Tape: Use masking tape where required to prevent contact of adhesive or primer with adjoining surfaces that otherwise would be permanently stained or damaged by such contact or by cleaning methods required to remove smears. Remove tape immediately after tooling without disturbing joint seal.

3.3 INSTALLATION

A. General: Comply with preformed joint seal manufacturer's written installation instructions for products and applications indicated unless more stringent requirements apply.

B. Installation of Preformed, Foam Joint Seals:

1. Install each length of seal immediately after removing protective wrapping.
2. Firmly secure compressed joint seals to joint gap side to obtain full bond using exposed pressure-sensitive adhesive or field-applied adhesive as recommended by manufacturer.
3. Do not pull or stretch material. Produce seal continuity at splices, ends, turns, and intersections of joints.
4. For applications at low ambient temperatures, heat foam joint seal material in compliance with manufacturer's written instructions.

3.4 PROTECTION

A. Protect preformed joint seals from damage resulting from construction operations or other causes so seals are without deterioration or damage at time of Substantial Completion. If, despite such protection, damage or deterioration occurs, cut out, remove, and repair damaged or deteriorated seals immediately so installations with repaired areas are indistinguishable from original work.

END OF SECTION 079100

SECTION 079200 - JOINT SEALANTS

PART 1 - GENERAL

1.1 RELATED DOCUMENTS

A. Drawings and general provisions of the Contract, including General and Supplementary Conditions and Division 01 Specification Sections, apply to this Section.

1.2 SUMMARY

A. Section Includes:

1. Silicone joint sealants.
2. Nonstaining silicone joint sealants.
3. Urethane joint sealants.
4. Mildew-resistant joint sealants.
5. Butyl joint sealants.
6. Latex joint sealants.

B. Related Requirements:

1. Section 079100 "Preformed Joint Seals" for preformed compressible foam and precured joint seals.
2. Section 079219 "Acoustical Joint Sealants" for sealing joints in acoustically rated assemblies.
3. Section 093013 "Ceramic Tiling" for sealing tile joints.
4. Section 0951113 "Acoustical Panel Ceilings" for sealing edge moldings at perimeters with acoustical sealant.
5. Section 321373 "Concrete Paving Joint Sealants" for sealing joints in paved roads, parking lots, walkways, and curbing.

1.3 ACTION SUBMITTALS

A. Product Data: For each joint-sealant product.

B. Samples for Initial Selection: Manufacturer's color charts consisting of strips of cured sealants showing the full range of colors available for each product exposed to view.

C. Samples for Verification: For each kind and color of joint sealant required, provide Samples with joint sealants in 1/2-inch- (13-mm-) wide joints formed between two 6-inch- (150-mm-) long strips of material matching the appearance of exposed surfaces adjacent to joint sealants.

D. Joint-Sealant Schedule: Include the following information:

1. Joint-sealant application, joint location, and designation.
2. Joint-sealant manufacturer and product name.
3. Joint-sealant formulation.
4. Joint-sealant color.

1.4 INFORMATIONAL SUBMITTALS

A. Product Test Reports: For each kind of joint sealant, for tests performed by manufacturer and witnessed by a qualified testing agency.

B. Preconstruction Laboratory Test Schedule: Include the following information for each joint sealant and substrate material to be tested:

1. Joint-sealant location and designation.
2. Manufacturer and product name.
3. Type of substrate material.
4. Proposed test.
5. Number of samples required.

C. Preconstruction Laboratory Test Reports: From sealant manufacturer, indicating the following:

1. Materials forming joint substrates and joint-sealant backings have been tested for compatibility and adhesion with joint sealants.
2. Interpretation of test results and written recommendations for primers and substrate preparation are needed for adhesion.

D. Preconstruction Field-Adhesion-Test Reports: Indicate which sealants and joint preparation methods resulted in optimum adhesion to joint substrates based on testing specified in "Preconstruction Testing" Article.

E. Field-Adhesion-Test Reports: For each sealant application tested.

F. Sample Warranties: For special warranties.

1.5 QUALITY ASSURANCE

A. Installer Qualifications: An authorized representative who is trained and approved by manufacturer.

B. Source Limitations: Obtain each kind of joint sealant from single source from single manufacturer.

C. Product Testing: Test joint sealants using a qualified testing agency.

1. Testing Agency Qualifications: Qualified according to ASTM C 1021 to conduct the testing indicated.

D. Mockups: Install sealant in mockups of assemblies specified in other Sections that are indicated to receive joint sealants specified in this Section. Use materials and installation methods specified in this Section.

1.6 PRECONSTRUCTION TESTING

A. Preconstruction Laboratory Testing: Submit to joint-sealant manufacturers, for testing indicated below, samples of materials that will contact or affect joint sealants.

1. Adhesion Testing: Use ASTM C 794 to determine whether priming and other specific joint preparation techniques are required to obtain rapid, optimum adhesion of joint sealants to joint substrates.
2. Compatibility Testing: Use ASTM C 1087 to determine sealant compatibility when in contact with glazing and gasket materials.

3. Stain Testing: Use ASTM C 1248 to determine stain potential of sealant when in contact with stone and masonry substrates.
4. Submit manufacturer's recommended number of pieces of each type of material, including joint substrates, joint-sealant backings, and miscellaneous materials.
5. Schedule sufficient time for testing and analyzing results to prevent delaying the Work.
6. For materials failing tests, obtain joint-sealant manufacturer's written instructions for corrective measures, including use of specially formulated primers.
7. Testing will not be required if joint-sealant manufacturers submit data that are based on previous testing, not older than 24 months, of sealant products for adhesion to, staining of, and compatibility with joint substrates and other materials matching those submitted.

B. Preconstruction Field-Adhesion Testing: Before installing sealants, field test their adhesion to Project joint substrates as follows:

1. Locate test joints where indicated on Project or, if not indicated, as directed by Architect.
2. Conduct field tests for each kind of sealant and joint substrate.
3. Notify Architect seven days in advance of dates and times when test joints will be erected.
4. Arrange for tests to take place with joint-sealant manufacturer's technical representative present.

   a. Test Method: Test joint sealants according to Method A, Field-Applied Sealant Joint Hand Pull Tab, in Appendix X1.1 in ASTM C 1193 or Method A, Tail Procedure, in ASTM C 1521.

      1) For joints with dissimilar substrates, verify adhesion to each substrate separately; extend cut along one side, verifying adhesion to opposite side. Repeat procedure for opposite side.

5. Report whether sealant failed to adhere to joint substrates or tore cohesively. Include data on pull distance used to test each kind of product and joint substrate. For sealants that fail adhesively, retest until satisfactory adhesion is obtained.
6. Evaluation of Preconstruction Field-Adhesion-Test Results: Sealants not evidencing adhesive failure from testing, in absence of other indications of noncompliance with requirements, will be considered satisfactory. Do not use sealants that fail to adhere to joint substrates during testing.

1.7 FIELD CONDITIONS

A. Do not proceed with installation of joint sealants under the following conditions:

1. When ambient and substrate temperature conditions are outside limits permitted by joint-sealant manufacturer or are below 40 deg F (5 deg C).
2. When joint substrates are wet.
3. Where joint widths are less than those allowed by joint-sealant manufacturer for applications indicated.
4. Where contaminants capable of interfering with adhesion have not yet been removed from joint substrates.

1.8 WARRANTY

A. Special Installer's Warranty: Installer agrees to repair or replace joint sealants that do not comply with performance and other requirements specified in this Section within specified warranty period.

1. Warranty Period: Two years from date of Substantial Completion.

B. Special Manufacturer's Warranty: Manufacturer agrees to furnish joint sealants to repair or replace those joint sealants that do not comply with performance and other requirements specified in this Section within specified warranty period.

1. Warranty Period: Ten years from date of Substantial Completion.

C. Special warranties specified in this article exclude deterioration or failure of joint sealants from the following:

1. Movement of the structure caused by stresses on the sealant exceeding sealant manufacturer's written specifications for sealant elongation and compression.
2. Disintegration of joint substrates from causes exceeding design specifications.
3. Mechanical damage caused by individuals, tools, or other outside agents.
4. Changes in sealant appearance caused by accumulation of dirt or other atmospheric contaminants.

PART 2 - PRODUCTS

2.1 JOINT SEALANTS, GENERAL

A. Compatibility: Provide joint sealants, backings, and other related materials that are compatible with one another and with joint substrates under conditions of service and application, as demonstrated by joint-sealant manufacturer, based on testing and field experience.

B. Colors of Exposed Joint Sealants: As selected by Architect from manufacturer's full range.

2.2 SILICONE JOINT SEALANTS

A. Silicone, Acid Curing, S, NS, 25, NT: Single-component, nonsag, plus 25 percent and minus 25 percent movement capability, nontraffic-use, acid-curing silicone joint sealant: ASTM C 920, Type S, Grade NS, Class 25, Use NT.

1. Products: Subject to compliance with requirements, provide one of the following:

a. Dow Corning Corporation.
b. Pecora Corporation; 860.
c. Sika Corporation; Joint Sealants; Sikasil-GP.

2.3 NONSTAINING SILICONE JOINT SEALANTS

A. Nonstaining Joint Sealants: No staining of substrates when tested according to ASTM C 1248.

B. Silicone, Nonstaining, S, NS, 50, NT: Nonstaining, single-component, nonsag, plus 50 percent and minus 50 percent movement capability, nontraffic-use, neutral-curing silicone joint sealant; ASTM C 920, Type S, Grade NS, Class 50, Use NT.

1. Products: Subject to compliance with requirements, provide one of the following:

a. Dow Corning Corporation; Dow Corning® 795 Silicone Building Sealant.
b. Pecora Corporation; 864NST.
c. Sika Corporation; Joint Sealants; Sikasil WS-295.
d. Tremco Incorporated; Spectrem 3.

2.4 URETHANE JOINT SEALANTS

A. Urethane, S, NS, 25, NT: Single-component, nonsag, nontraffic-use, plus 25 percent and minus 25 percent movement capability, urethane joint sealant; ASTM C 920, Type S, Grade NS, Class 25, Use NT.

1. Products: Subject to compliance with requirements, provide one of the following:

a. Pecora Corporation; Dynatrol I-XL.
b. Polymeric Systems, Inc.; Flexiprene 1000.
c. Sika Corporation; Joint Sealants; Sikaflex Textured Sealant.
d. Tremco Incorporated; Dymonic.

B. Urethane, S, P, 25, T, NT: Single-component, pourable, plus 25 percent and minus 25 percent movement capability, traffic- and nontraffic-use, urethane joint sealant; ASTM C 920, Type S, Grade P, Class 25, Uses T and NT.

1. Products: Subject to compliance with requirements, provide one of the following:

a. BASF Corporation; Construction Systems; MasterSeal SL 1 (Pre-2014: Sonolastic SL1).
b. Pecora Corporation; NR-201.
c. Polymeric Systems, Inc.; Flexiprene 952.
d. Sherwin-Williams Company (The); Stampede 1SL.

C. Urethane, M, P, 50, T, NT: Multicomponent, pourable, plus 50 percent and minus 50 percent movement capability, traffic- and nontraffic-use, urethane joint sealant; ASTM C 920, Type M, Grade P, Class 50, Uses T and NT.

1. Products: Subject to compliance with requirements, provide one of the following:

a. Pecora Corporation; DynaTrol II.
b. Tremco Incorporated; Vulkhem 445SSL.

2.5 MILDEW-RESISTANT JOINT SEALANTS

A. Mildew-Resistant Joint Sealants: Formulated for prolonged exposure to humidity with fungicide to prevent mold and mildew growth.

B. Silicone, Mildew Resistant, Acid Curing, S, NS, 25, NT: Mildew-resistant, single-component, nonsag, plus 25 percent and minus 25 percent movement capability, nontraffic-use, acid-curing silicone joint sealant; ASTM C 920, Type S, Grade NS, Class 25, Use NT.

1. Products: Subject to compliance with requirements, provide one of the following:

a. Dow Corning Corporation; DOW CORNING® 786 SILICONE SEALANT -.
b. GE Construction Sealants; Momentive Performance Materials Inc.; SCS1700 Sanitary.
c. Pecora Corporation; 898NST.
d. Tremco Incorporated; Tremsil 200.

2.6 BUTYL JOINT SEALANTS

A. Butyl-Rubber-Based Joint Sealants: ASTM C 1311.

1. Products: Subject to compliance with requirements, provide one of the following:

a. Bostik, Inc.; Chem-Calk 300.
b. Pecora Corporation; BC-158.

2.7 LATEX JOINT SEALANTS

A. Acrylic Latex: Acrylic latex or siliconized acrylic latex, ASTM C 834, Type OP, Grade NF.

1. Products: Subject to compliance with requirements, provide one of the following:

a. Pecora Corporation; AC-20.
b. Sherwin-Williams Company (The); 950A Siliconized Acrylic Latex Caulk, White.
c. Tremco Incorporated; Tremflex 834.

2.8 JOINT-SEALANT BACKING

A. Sealant Backing Material, General: Nonstaining; compatible with joint substrates, sealants, primers, and other joint fillers; and approved for applications indicated by sealant manufacturer based on field experience and laboratory testing.

B. Cylindrical Sealant Backings: ASTM C 1330, Type C (closed-cell material with a surface skin) Type B (bicellular material with a surface skin) or any of the preceding types, as approved in writing by joint-sealant manufacturer for joint application indicated, and of size and density to control sealant depth and otherwise contribute to producing optimum sealant performance.

C. Bond-Breaker Tape: Polyethylene tape or other plastic tape recommended by sealant manufacturer for preventing sealant from adhering to rigid, inflexible joint-filler materials or joint surfaces at back of joint. Provide self-adhesive tape where applicable.

2.9 MISCELLANEOUS MATERIALS

A. Primer: Material recommended by joint-sealant manufacturer where required for adhesion of sealant to joint substrates indicated, as determined from preconstruction joint-sealant-substrate tests and field tests.

B. Cleaners for Nonporous Surfaces: Chemical cleaners acceptable to manufacturers of sealants and sealant backing materials, free of oily residues or other substances capable of staining or harming joint substrates and adjacent nonporous surfaces in any way, and formulated to promote optimum adhesion of sealants to joint substrates.

C. Masking Tape: Nonstaining, nonabsorbent material compatible with joint sealants and surfaces adjacent to joints.

PART 3 - EXECUTION

3.1 EXAMINATION

A. Examine joints indicated to receive joint sealants, with Installer present, for compliance with requirements for joint configuration, installation tolerances, and other conditions affecting performance of the Work.

B. Proceed with installation only after unsatisfactory conditions have been corrected.

3.2 PREPARATION

A. Surface Cleaning of Joints: Clean out joints immediately before installing joint sealants to comply with joint-sealant manufacturer's written instructions and the following requirements:

1. Remove all foreign material from joint substrates that could interfere with adhesion of joint sealant, including dust, paints (except for permanent, protective coatings tested and approved for sealant adhesion and compatibility by sealant manufacturer), old joint sealants, oil, grease, waterproofing, water repellents, water, surface dirt, and frost.
2. Clean porous joint substrate surfaces by brushing, grinding, mechanical abrading, or a combination of these methods to produce a clean, sound substrate capable of developing optimum bond with joint sealants. Remove loose particles remaining after cleaning operations above by vacuuming or blowing out joints with oil-free compressed air. Porous joint substrates include the following:

    a. Concrete.
    b. Masonry.
    c. Unglazed surfaces of ceramic tile.

3. Remove laitance and form-release agents from concrete.
4. Clean nonporous joint substrate surfaces with chemical cleaners or other means that do not stain, harm substrates, or leave residues capable of interfering with adhesion of joint sealants. Nonporous joint substrates include the following:

    a. Metal.
    b. Glass.
    c. Porcelain enamel.
    d. Glazed surfaces of ceramic tile.

B. Joint Priming: Prime joint substrates where recommended by joint-sealant manufacturer or as indicated by preconstruction joint-sealant-substrate tests or prior experience. Apply primer to comply with joint-sealant manufacturer's written instructions. Confine primers to areas of joint-sealant bond; do not allow spillage or migration onto adjoining surfaces.

C. Masking Tape: Use masking tape where required to prevent contact of sealant or primer with adjoining surfaces that otherwise would be permanently stained or damaged by such contact or by cleaning methods required to remove sealant smears. Remove tape immediately after tooling without disturbing joint seal.

3.3 INSTALLATION OF JOINT SEALANTS

A. General: Comply with joint-sealant manufacturer's written installation instructions for products and applications indicated, unless more stringent requirements apply.

B. Sealant Installation Standard: Comply with recommendations in ASTM C 1193 for use of joint sealants as applicable to materials, applications, and conditions indicated.

C. Install sealant backings of kind indicated to support sealants during application and at position required to produce cross-sectional shapes and depths of installed sealants relative to joint widths that allow optimum sealant movement capability.

1. Do not leave gaps between ends of sealant backings.
2. Do not stretch, twist, puncture, or tear sealant backings.
3. Remove absorbent sealant backings that have become wet before sealant application, and replace them with dry materials.

D. Install bond-breaker tape behind sealants where sealant backings are not used between sealants and backs of joints.

E. Install sealants using proven techniques that comply with the following and at the same time backings are installed:

1. Place sealants so they directly contact and fully wet joint substrates.
2. Completely fill recesses in each joint configuration.
3. Produce uniform, cross-sectional shapes and depths relative to joint widths that allow optimum sealant movement capability.

F. Tooling of Nonsag Sealants: Immediately after sealant application and before skinning or curing begins, tool sealants according to requirements specified in subparagraphs below to form smooth, uniform beads of configuration indicated; to eliminate air pockets; and to ensure contact and adhesion of sealant with sides of joint.

1. Remove excess sealant from surfaces adjacent to joints.
2. Use tooling agents that are approved in writing by sealant manufacturer and that do not discolor sealants or adjacent surfaces.
3. Provide concave joint profile per Figure 8A in ASTM C 1193 unless otherwise indicated.
4. Provide flush joint profile at locations indicated on Drawings according to Figure 8B in ASTM C 1193.
5. Provide recessed joint configuration of recess depth and at locations indicated on Drawings according to Figure 8C in ASTM C 1193.

    a. Use masking tape to protect surfaces adjacent to recessed tooled joints.

3.4 FIELD QUALITY CONTROL

A. Field-Adhesion Testing: Field test joint-sealant adhesion to joint substrates as follows:

1. Extent of Testing: Test completed and cured sealant joints as follows:

    a. Perform 10 tests for the first 1000 feet (300 m) of joint length for each kind of sealant and joint substrate.
    b. Perform one test for each 1000 feet (300 m) of joint length thereafter or one test per each floor per elevation.

2. Test Method: Test joint sealants according to Method A, Field-Applied Sealant Joint Hand Pull Tab, in Appendix X1 in ASTM C 1193 or Method A, Tail Procedure, in ASTM C 1521.

    a. For joints with dissimilar substrates, verify adhesion to each substrate separately; extend cut along one side, verifying adhesion to opposite side. Repeat procedure for opposite side.

3. Inspect tested joints and report on the following:

    a. Whether sealants filled joint cavities and are free of voids.
    b. Whether sealant dimensions and configurations comply with specified requirements.
    c. Whether sealants in joints connected to pulled-out portion failed to adhere to joint substrates or tore cohesively. Include data on pull distance used to test each kind of product and joint substrate. Compare these results to determine if adhesion complies with sealant manufacturer's field-adhesion hand-pull test criteria.

4. Record test results in a field-adhesion-test log. Include dates when sealants were installed, names of persons who installed sealants, test dates, test locations, whether joints were primed, adhesion results and percent elongations, sealant material, sealant configuration, and sealant dimensions.
5. Repair sealants pulled from test area by applying new sealants following same procedures used originally to seal joints. Ensure that original sealant surfaces are clean and that new sealant contacts original sealant.

B. Evaluation of Field-Adhesion-Test Results: Sealants not evidencing adhesive failure from testing or noncompliance with other indicated requirements will be considered satisfactory. Remove sealants that fail to adhere to joint substrates during testing or to comply with other requirements. Retest failed applications until test results prove sealants comply with indicated requirements.

3.5 CLEANING

A. Clean off excess sealant or sealant smears adjacent to joints as the Work progresses by methods and with cleaning materials approved in writing by manufacturers of joint sealants and of products in which joints occur.

3.6 PROTECTION

A. Protect joint sealants during and after curing period from contact with contaminating substances and from damage resulting from construction operations or other causes so sealants are without deterioration or damage at time of Substantial Completion. If, despite such protection, damage or deterioration occurs, cut out, remove, and repair damaged or deteriorated joint sealants immediately so installations with repaired areas are indistinguishable from original work.

3.7 JOINT-SEALANT SCHEDULE

A. Joint-Sealant Application: Exterior joints in horizontal traffic surfaces.

1. Joint Locations:

   a. Isolation and contraction joints in cast-in-place concrete slabs.
   b. Joints between plant-precast architectural concrete paving units.
   c. Joints between sidewalks and building.
   d. Joints between different materials listed above.
   e. Other joints as indicated on Drawings.

2. Joint Sealant: Urethane, M, P, 50, T, NT.
3. Joint-Sealant Color: As selected by Architect from manufacturer's full range of colors.

B. Joint-Sealant Application: Exterior joints in vertical surfaces and horizontal non-traffic surfaces.

1. Joint Locations:

   a. Construction joints in cast-in-place concrete.
   b. Joints between plant-precast architectural concrete units.
   c. Control and expansion joints in unit masonry.
   d. Joints in dimension stone cladding.
   e. Joints in glass unit masonry assemblies.
   f. Joints between metal panels.
   g. Joints between different materials listed above.

h. Perimeter joints between materials listed above and frames of doors, windows, and louvers.
i. Control and expansion joints in ceilings and other overhead surfaces.
j. Other joints as indicated on Drawings.

2. Joint Sealant: Silicone, nonstaining, S, NS, 50, NT.
3. Joint-Sealant Color: As selected by Architect from manufacturer's full range of colors.

C. Joint-Sealant Application: Interior joints in horizontal traffic surfaces.

1. Joint Locations:

a. Isolation joints in cast-in-place concrete slabs.
b. Control and expansion joints in tile flooring (other than ceramic tile).
c. Other joints as indicated on Drawings.

2. Joint Sealant: Urethane, S, P, 25, T, NT.
3. Joint-Sealant Color: As selected by Architect from manufacturer's full range of colors.

D. Joint-Sealant Application: Interior joints in vertical surfaces and horizontal non-traffic surfaces.

1. Joint Locations:

a. Control and expansion joints on exposed interior surfaces of exterior walls.
b. Vertical joints on exposed surfaces of unit masonry walls and partitions.
c. Other joints as indicated on Drawings.

2. Joint Sealant: Urethane, S, NS, 25, NT.
3. Joint-Sealant Color: As selected by Architect from manufacturer's full range of colors.

E. Joint-Sealant Application: Interior joints in vertical surfaces and horizontal nontraffic surfaces not subject to significant movement.

1. Joint Locations:

a. Perimeter joints between interior wall surfaces and frames of interior doors and windows.
b. Drywall inside corners.
c. Other joints as indicated on Drawings.

2. Joint Sealant: Acrylic latex.
3. Joint-Sealant Color: As selected by Architect from manufacturer's full range of colors.

F. Joint-Sealant Application: Mildew-resistant interior joints in vertical surfaces and horizontal non-traffic surfaces.

1. Joint Locations:

a. Joints between plumbing fixtures and adjoining walls, floors, and counters.
b. Tile control and expansion joints.
c. Other joints as indicated on Drawings.

2. Joint Sealant: Silicone, mildew resistant, acid curing, S, NS, 25, NT.
3. Joint-Sealant Color: As selected by Architect from manufacturer's full range of colors.

G. Joint-Sealant Application: Concealed mastics.

1. Joint Locations:

    a. Aluminum thresholds.
    b. Sill plates.
    c. Other joints as indicated on Drawings.

2. Joint Sealant: Butyl-rubber based.
3. Joint-Sealant Color: As selected by Architect from manufacturer's full range of colors.

END OF SECTION 079200

SECTION 079219 - ACOUSTICAL JOINT SEALANTS

PART 1 - GENERAL

1.1 RELATED DOCUMENTS

A. Drawings and general provisions of the Contract, including General and Supplementary Conditions and Division 01 Specification Sections, apply to this Section.

1.2 SUMMARY

A. Section includes acoustical joint sealants.

B. Related Requirements:

1. Section 079200 "Joint Sealants" for joint sealants for nonacoustical applications.

1.3 ACTION SUBMITTALS

A. Product Data: For each acoustical joint sealant.

B. Samples for Initial Selection: Manufacturer's color charts consisting of strips of cured sealants showing the full range of colors available for each product exposed to view.

C. Samples for Verification: For each kind and color of acoustical joint sealant required, provide Samples with joint sealants in 1/2-inch- (13-mm-) wide joints formed between two 6-inch- (150-mm-) long strips of material matching the appearance of exposed surfaces adjacent to joint sealants.

D. Acoustical-Joint-Sealant Schedule: Include the following information:

1. Joint-sealant application, joint location, and designation.
2. Joint-sealant manufacturer and product name.
3. Joint-sealant formulation.
4. Joint-sealant color.

1.4 INFORMATIONAL SUBMITTALS

A. Product Test Reports: For each kind of acoustical joint sealant, for tests performed by manufacturer and witnessed by a qualified testing agency.

1.5 WARRANTY

A. Special Installer's Warranty: Installer agrees to repair or replace acoustical joint sealants that do not comply with performance and other requirements specified in this Section within specified warranty period.

1. Warranty Period: Two years from date of Substantial Completion.

PART 2 - PRODUCTS

2.1 PERFORMANCE REQUIREMENTS

A. Provide acoustical joint-sealant products that effectively reduce airborne sound transmission through perimeter joints and openings in building construction, as demonstrated by testing representative assemblies according to ASTM E 90.

2.2 ACOUSTICAL JOINT SEALANTS

A. Acoustical Sealant for Exposed and Concealed Joints: Manufacturer's standard nonsag, paintable, nonstaining latex acoustical sealant complying with ASTM C 834.

1. Manufacturers: Subject to compliance with requirements, available manufacturers offering products that may be incorporated into the Work include, but are not limited to the following:

a. Hilti, Inc.; CP 506 Smoke and Acoustical Sealant.
b. Pecora Corporation; AC-20 FTR.
c. Serious Energy Inc.; Quiet Seal Pro.
d. United States Gypsum Company; SHEETROCK Acoustical Sealant.

2. Colors of Exposed Acoustical Joint Sealants: As selected by Architect from manufacturer's full range of colors.

2.3 MISCELLANEOUS MATERIALS

A. Primer: Material recommended by acoustical-joint-sealant manufacturer where required for adhesion of sealant to joint substrates.

B. Cleaners for Nonporous Surfaces: Chemical cleaners acceptable to manufacturers of sealants and sealant backing materials, free of oily residues or other substances capable of staining or harming joint substrates and adjacent nonporous surfaces in any way, and formulated to promote optimum adhesion of sealants to joint substrates.

C. Masking Tape: Nonstaining, nonabsorbent material compatible with joint sealants and surfaces adjacent to joints.

PART 3 - EXECUTION

3.1 EXAMINATION

A. Examine joints indicated to receive acoustical joint sealants, with Installer present, for compliance with requirements for joint configuration, installation tolerances, and other conditions affecting performance of the Work.

B. Proceed with installation only after unsatisfactory conditions have been corrected.

3.2 PREPARATION

A. Surface Cleaning of Joints: Clean out joints immediately before installing acoustical joint sealants to comply with joint-sealant manufacturer's written instructions.

B. Joint Priming: Prime joint substrates where recommended by acoustical-joint-sealant manufacturer. Apply primer to comply with joint-sealant manufacturer's written instructions. Confine primers to areas of joint-sealant bond; do not allow spillage or migration onto adjoining surfaces.

C. Masking Tape: Use masking tape where required to prevent contact of sealant or primer with adjoining surfaces that otherwise would be permanently stained or damaged by such contact or by cleaning methods required to remove sealant smears. Remove tape immediately after tooling without disturbing joint seal.

3.3 INSTALLATION OF ACOUSTICAL JOINT SEALANTS

A. Comply with acoustical joint-sealant manufacturer's written installation instructions unless more stringent requirements apply.

B. STC-Rated Assemblies: Seal construction at perimeters, behind control joints, and at openings and penetrations with a continuous bead of acoustical joint sealant. Install acoustical joint sealants at both faces of partitions, at perimeters, and through penetrations. Comply with ASTM C 919, ASTM C 1193, and manufacturer's written recommendations for closing off sound-flanking paths around or through assemblies, including sealing partitions to underside of floor slabs above acoustical ceilings.

C. Acoustical Ceiling Areas: Apply acoustical joint sealant at perimeter edge moldings of acoustical ceiling areas in a continuous ribbon concealed on back of vertical legs of moldings before they are installed.

3.4 CLEANING

A. Clean off excess sealant or sealant smears adjacent to joints as the Work progresses by methods and with cleaning materials approved in writing by manufacturers of acoustical joint sealants and of products in which joints occur.

3.5 PROTECTION

A. Protect acoustical joint sealants during and after curing period from contact with contaminating substances and from damage resulting from construction operations or other causes so sealants are without deterioration or damage at time of Substantial Completion. If, despite such protection, damage or deterioration occurs, cut out, remove, and repair damaged or deteriorated acoustical joint sealants immediately so installations with repaired areas are indistinguishable from original work.

END OF SECTION 079219

SECTION 079513.13 - INTERIOR EXPANSION JOINT COVER ASSEMBLIES

PART 1 - GENERAL

1.1 RELATED DOCUMENTS

A. Drawings and general provisions of the Contract, including General and Supplementary Conditions and Division 01 Specification Sections, apply to this Section.

1.2 SUMMARY

A. Section includes interior expansion joint cover assemblies.

B. Related Requirements:

1. Section 079100 "Preformed Joint Seals."

1.3 ACTION SUBMITTALS

A. Product Data: For each type of product.

1. Include construction details, material descriptions, dimensions of individual components and profiles, and finishes for expansion joint cover assemblies.

B. Shop Drawings: For each expansion joint cover assembly.

1. Include plans, elevations, sections, details, splices, block-out requirement, attachments to other work, and line diagrams showing entire route of each expansion joint.
2. Where expansion joint cover assemblies change planes, provide isometric or clearly detailed drawing depicting how components interconnect.

C. Samples for Initial Selection: For each type of exposed finish.

1. Include manufacturer's color charts showing the full range of colors and finishes available for each exposed metal and elastomeric-seal material.

D. Samples for Verification: For each type of expansion joint cover assembly, full width by 6 inches (150 mm) long in size.

PART 2 - PRODUCTS

2.1 ASSEMBLY DESCRIPTION

A. Furnish units in longest practicable lengths to minimize field splicing.

B. Include factory-fabricated closure materials and transition pieces, T-joints, corners, curbs, cross-connections, and other accessories as required to provide continuous expansion joint cover assemblies.

C. Manufacturers: Subject to compliance with requirements, provide basis-of-design product by MM Systems Corporation, or comparable product by one of the following:

1. Construction Specialties, Inc.
2. Inpro Corporation.

2.2 PERFORMANCE REQUIREMENTS

A. Fire-Resistance Ratings: Provide expansion joint cover assemblies with fire barriers identical to those of systems tested for fire resistance according to UL 2079 or ASTM E 1966 by a qualified testing agency.

1. Hose Stream Test: Wall-to-wall and wall-to-ceiling assemblies shall be subjected to hose stream testing.

B. Expansion Joint Design Criteria:

1. Type of Movement

a. Nominal Joint Width: As indicated on Drawings.
b. Minimum Joint Width: As indicated on Drawings.
c. Maximum Joint Width: As indicated on Drawings.

2.3 FLOOR EXPANSION JOINT COVERS

A. Center-Plate Floor Joint Cover (**EJ-8**): Assembly consisting of center plate that slides over metal frames fixed to sides of joint gaps.

1. Basis-of-Design: MM Systems HFXR-2-11.
2. Application: Floor to floor.
3. Installation: Recessed.
4. Cover-Plate Design: Plain.
5. Exposed Metal:

a. Aluminum: Manufacturer's standard.

B. Center-Plate Floor Joint Cover (**EJ-9**): Assembly consisting of center plate that slides over metal frames fixed to sides of joint gaps.

1. Basis-of-Design: MM Systems HFXREH-2-0.5.
2. Application: Floor to wall.
3. Installation: Recessed.
4. Cover-Plate Design: Plain.
5. Exposed Metal:

a. Aluminum: Manufacturer's standard.

2.4 WALL EXPANSION JOINT COVERS

A. Metal-Plate Wall Joint Cover (**EJ-2**): Metal cover plate fixed on one side of joint gap and free to slide on other.

1. Basis-of-Design: MM Systems FX-L-2-1.

2. Application: Wall to corner (GWB).
3. Fire-Resistance Rating: Not less than that indicated on Drawings.
4. Exposed Metal:

    a. Aluminum: Clear anodic, Class II.

B. Metal-Plate Wall Joint Cover (**EJ-3**): Metal cover plate fixed on one side of joint gap and free to slide on other.

1. Basis-of-Design: MM Systems EX-L2
2. Application: Wall to corner (CMU).
3. Fire-Resistance Rating: Not less than that indicated on Drawings.
4. Exposed Metal:

    a. Aluminum: Clear anodic, Class II.

C. Metal-Plate Wall Joint Cover (**EJ-4**): Metal cover plate fixed on one side of joint gap and free to slide on other.

1. Basis-of-Design: MM Systems EX-K2.
2. Application: Wall to wall (CMU).
3. Fire-Resistance Rating: Not less than that indicated on Drawings.
4. Exposed Metal:

    a. Aluminum: Clear anodic, Class II.

2.5 CEILING EXPANSION JOINT COVERS

A. Elastomeric-Seal Acoustical Ceiling Joint Cover (**EJ-5**): Elastomeric-seal assembly designed for use in acoustical ceilings and fixed to one side of joint gap.

1. Basis-of-Design: MM Systems VSG-200.
2. Application: Ceiling to ceiling (acoustical ceiling).
3. Exposed Metal:

    a. Aluminum: Clear anodic, Class II.

4. Seal: Preformed elastomeric membranes or extrusions.

    a. Color: As selected by Architect from manufacturer's full range.

B. Elastomeric-Seal Ceiling Joint Cover (**EJ-6**): Elastomeric-seal assembly designed for use in acoustical ceilings and fixed to one side of joint gap.

1. Basis-of-Design: MM Systems VSGL-200.
2. Application: Wall to ceiling (acoustical ceiling).
3. Exposed Metal:

    a. Aluminum: Clear anodic, Class II.

4. Seal: Preformed elastomeric membranes or extrusions.

    a. Color: As selected by Architect from manufacturer's full range.

C. Elastomeric-Seal Ceiling Joint Cover (**EJ-7**): Assembly consisting of elastomeric seal anchored to frames fixed to sides of joint gap.

1. Basis-of-Design: MM Systems VSW-200.
2. Application: Ceiling to ceiling (GWB).
3. Exposed Metal:

   a. Aluminum: Clear anodic, Class II.

4. Seal: Preformed elastomeric membranes or extrusions.

   a. Color: As selected by Architect from manufacturer's full range.

2.6 MATERIALS

A. Aluminum: ASTM B 221 (ASTM B 221M), Alloy 6063-T5 for extrusions; ASTM B 209 (ASTM B 209M), Alloy 6061-T6 for sheet and plate.

1. Apply manufacturer's standard protective coating on aluminum surfaces to be placed in contact with cementitious materials.

B. Stainless Steel: ASTM A 240/A 240M or ASTM A 666, Type 304 for plates, sheet, and strips.

C. Elastomeric Seals: Manufacturer's standard preformed elastomeric membranes or extrusions to be installed in metal frames.

D. Fire Barriers: Any material or material combination, when fire tested after cycling, designated to resist the passage of flame and hot gases through a movement joint and to comply with performance criteria for required fire-resistance rating.

E. Moisture Barrier: Manufacturer's standard, flexible elastomeric material.

2.7 ALUMINUM FINISHES

A. Mill finish.

B. Clear Anodic Finish: AAMA 611, AA-M12C22A31, Class II, 0.010 mm or thicker.

2.8 ACCESSORIES

A. Manufacturer's standard attachment devices. Include anchors, clips, fasteners, set screws, spacers, and other accessories compatible with material in contact, as indicated or required for complete installations.

PART 3 - EXECUTION

3.1 EXAMINATION

A. Examine surfaces where expansion joint cover assemblies will be installed for installation tolerances and other conditions affecting performance of the Work.

B. Notify Architect where discrepancies occur that will affect proper expansion joint cover assembly installation and performance.

C. Proceed with installation only after unsatisfactory conditions have been corrected.

3.2 PREPARATION

A. Prepare substrates according to expansion joint cover assembly manufacturer's written instructions.

B. Coordinate and furnish anchorages, setting drawings, and instructions for installing expansion joint cover assemblies. Provide fasteners of metal, type, and size to suit type of construction indicated and to provide for secure attachment of expansion joint cover assemblies.

3.3 INSTALLATION

A. Comply with manufacturer's written instructions for storing, handling, and installing expansion joint cover assemblies and materials unless more stringent requirements are indicated.

B. Metal Frames: Perform cutting, drilling, and fitting required to install expansion joint cover assemblies.

1. Repair or grout block out as required for continuous frame support using nonmetallic, shrinkage-resistant grout.
2. Install frames in continuous contact with adjacent surfaces.

    a. Shimming is not permitted.

3. Install in true alignment and proper relationship to joints and adjoining finished surfaces measured from established lines and levels.
4. Adjust for differences between actual structural gap and nominal design gap due to ambient temperature at time of installation.
5. Cut and fit ends to accommodate thermal expansion and contraction of metal without buckling of frames.
6. Locate anchors at interval recommended by manufacturer, but not less than 3 inches (75 mm) from each end and not more than 24 inches (600 mm) o.c.

C. Seals: Install elastomeric seals and membranes in frames to comply with manufacturer's written instructions. Install with minimum number of end joints.

1. Provide in continuous lengths for straight sections.
2. Seal transitions. Vulcanize or heat-weld field-spliced joints as recommended by manufacturer.
3. Installation: Mechanically lock seals into frames or adhere to frames with adhesive or pressure-sensitive tape as recommended by manufacturer.

D. Install with hairline mitered corners where expansion joint cover assemblies change direction or abut other materials.

E. Terminate exposed ends of expansion joint cover assemblies with field- or factory-fabricated termination devices.

3.4 PROTECTION

A. Do not remove protective covering until finish work in adjacent areas is complete. When protective covering is removed, clean exposed metal surfaces to comply with manufacturer's written instructions.

B. Protect the installation from damage by work of other Sections. Where necessary due to heavy construction traffic, remove and properly store cover plates or seals and install temporary protection over expansion joint cover assemblies. Reinstall cover plates or seals prior to Substantial Completion.

END OF SECTION 079513.13

SECTION 080671 – DOOR HARDWARE SETS

PART 1 - GENERAL

1.1 RELATED DOCUMENTS

A. Drawings and general provisions of the Contract, including General and Supplementary Conditions and Division 1 Specification Sections, apply to this Section.

1.2 SUMMARY

A. This Section references specification sections relating to commercial door hardware for the following:

1. Swinging doors.
2. Sliding Doors.
3. Other doors to the extent indicated.

B. Commercial door hardware includes, but is not necessarily limited to, the following:

1. Mechanical door hardware.
2. Electromechanical and access control door hardware.
3. Electromechanical and access control door hardware power supplies, back-ups and surge protection.
4. Automatic operators.
5. Cylinders specified for doors in other sections.

C. Related Sections:

1. Division 08 Section “Hollow Metal Doors and Frames”.
2. Division 08 Sections “Flush Wood Doors”.
3. Division 08 Section “Door Hardware”.
4. Division 08 Section “Automatic Door Operators”.
5. Division 28 Section “Access Control Systems”.

D. Codes and References: Comply with the version year adopted by the Authority Having Jurisdiction.

1. ANSI A117.1 - Accessible and Usable Buildings and Facilities.
2. ICC/IBC - International Building Code.
3. NFPA 70 - National Electrical Code.
4. NFPA 80 - Fire Doors and Windows.
5. NFPA 101 - Life Safety Code.
6. NFPA 105 - Installation of Smoke Door Assemblies.
7. State Building Codes, Local Amendments.

E. Standards: Reference Related Sections for requirements regarding compliance with applicable industry standards.

1.3 SUBMITTALS

A. Product Data: Manufacturer's product data sheets including installation details, material descriptions, dimensions of individual components and profiles, operational descriptions and finishes.

B. Door Hardware Schedule: Prepared by or under the supervision of supplier, detailing fabrication and assembly of door hardware, as well as procedures and diagrams. Coordinate the final Door Hardware Schedule with doors, frames, and related work to ensure proper size, thickness, hand, function, and finish of door hardware.

1. Format: Comply with scheduling sequence and vertical format in DHI's "Sequence and Format for the Hardware Schedule."

2. Organization: Organize the Door Hardware Schedule into door hardware sets indicating complete designations of every item required for each door or opening. Organize door hardware sets in same order as in the Door Hardware Sets at the end of Part 3. Submittals that do not follow the same format and order as the Door Hardware Sets will be rejected and subject to resubmission.

3. Content: Include the following information:

a. Type, style, function, size, label, hand, and finish of each door hardware item.
b. Manufacturer of each item.
c. Fastenings and other pertinent information.
d. Location of door hardware set, cross-referenced to Drawings, both on floor plans and in door and frame schedule.
e. Explanation of abbreviations, symbols, and codes contained in schedule.
f. Mounting locations for door hardware.
g. Door and frame sizes and materials.

4. Submittal Sequence: Submit the final Door Hardware Schedule at earliest possible date, particularly where approval of the Door Hardware Schedule must precede fabrication of other work that is critical in the Project construction schedule. Include Product Data, Samples, Shop Drawings of other work affected by door hardware, and other information essential to the coordinated review of the Door Hardware Schedule.

C. Keying Schedule: Prepared under the supervision of the Owner, separate schedule detailing final keying instructions for locksets and cylinders in writing. Include keying system explanation, door numbers, key set symbols, hardware set numbers and special instructions. Owner to approve submitted keying schedule prior to the ordering of permanent cylinders.

D. Product Test Reports: Indicating compliance with cycle testing requirements, based on evaluation of comprehensive tests performed by manufacturer and witnessed by a qualified independent testing agency.

E. Operating and Maintenance Manuals: Provide manufacturers operating and maintenance manuals for each item comprising the complete door hardware installation in quantity as required in Division 01, Closeout Submittals. The manual to include the name, address, and contact information of the manufacturers providing the hardware and their nearest service representatives. The final copies delivered after completion of the installation test to include "as built" modifications made during installation, checkout, and acceptance.

F. Warranties and Maintenance: Special warranties and maintenance agreements specified in the Related Sections.

1.4 QUALITY ASSURANCE

A. Manufacturers Qualifications: Engage qualified manufacturers with a minimum [5] years of documented experience in producing hardware and equipment similar to that indicated for this Project and that have a proven record of successful in-service performance.

B. Installer Qualifications: Installers, trained by the primary product manufacturers, with a minimum [3] years documented experience installing both standard and electrified builders hardware similar in material, design, and extent to that indicated for this Project and whose work has resulted in construction with a record of successful in-service performance.

C. Door Hardware Supplier Qualifications: Experienced commercial door hardware distributors with a minimum [5] years documented experience supplying both mechanical and electromechanical hardware installations comparable in material, design, and extent to that indicated for this Project. Supplier recognized as a factory direct distributor in good standing by the manufacturers of the primary materials with a warehousing facility in Project's vicinity. Supplier to have on staff a certified Architectural Hardware Consultant (AHC) available during the course of the Work to consult with Contractor, Architect, and Owner concerning both standard and electromechanical door hardware and keying.

D. Source Limitations: Obtain each type and variety of Door Hardware specified in the Related Sections from a single source, qualified supplier unless otherwise indicated.

E. Regulatory Requirements: Comply with NFPA 70, NFPA 80, NFPA 101 and ANSI A117.1 requirements and guidelines as directed in the applicable model building code.

F. Pre-Submittal Conference: Conduct coordination conference in compliance with requirements in Division 01 Section "Project Meetings" with attendance by representatives of Supplier(s), Installer(s), and Contractor(s) to review proper methods and the procedures for receiving, handling, and installing door hardware.

1.5 DELIVERY, STORAGE, AND HANDLING

A. Inventory door hardware on receipt and provide secure lock-up and shelving for door hardware delivered to Project site. Do not store electronic access control hardware, software or accessories at Project site without prior authorization.

B. Tag each item or package separately with identification related to the final Door Hardware Schedule, and include basic installation instructions with each item or package.

C. Deliver, as applicable, permanent keys, cylinders, cores, access control credentials, software and related accessories directly to Owner via registered mail or overnight package service. Instructions for delivery to the Owner shall be established at the "Keying Conference".

1.6 COORDINATION

A. Templates: Obtain and distribute to the parties involved templates for doors, frames, and other work specified to be factory prepared for installing standard and electrified hardware. Check Shop Drawings of other work to confirm that adequate provisions are made for locating and installing hardware to comply with indicated requirements.

B. Door and Frame Preparation: Division 08 Sections (Steel, Aluminum and Wood) doors and corresponding frames are to be prepared, reinforced and pre-wired (if applicable) to receive the

installation of the specified electrified, monitoring, signaling and access control system hardware without additional in-field modifications.

1.7 WARRANTY

A. General Warranty: Reference Division 01, General Requirements. Special warranties specified in this Article shall not deprive Owner of other rights Owner may have under other provisions of the Contract Documents and shall be in addition to, and run concurrent with, other warranties made by Contractor under requirements of the Contract Documents.

1.8 MAINTENANCE SERVICE

A. Maintenance Tools and Instructions: Furnish a complete set of specialized tools and maintenance instructions as needed for Owner's continued adjustment, maintenance, and removal and replacement of door hardware.

PART 2 - PRODUCTS

2.1 SCHEDULED DOOR HARDWARE

A. Refer to “PART 3 – EXECUTION” for required specification sections.

PART 3 - EXECUTION

3.1 DOOR HARDWARE SETS

A. The door hardware sets represent the design intent and direction of the owner and architect. They are a guideline only and should not be considered a detailed hardware schedule. Discrepancies, conflicting hardware and missing items should be brought to the attention of the architect with corrections made prior to the bidding process. Omitted items not included in a hardware set should be scheduled with the appropriate additional hardware required for proper application and functionality.

B. The supplier is responsible for handing and sizing all products as listed in the door hardware sets. Quantities listed are for each pair of doors, or for each single door.

C. Products listed in the Door Hardware Sets must meet the requirements described in the specification sections noted.

1. Section 08 71 00 – Door Hardware.

D. Manufacturer’s Abbreviations:

1. MK - McKinney
2. RF - Rixson
3. RO - Rockwood
4. RU - Corbin Russwin
5. NO - Norton

6. PE - Pemko
7. SA - Sargent
8. SU - Securitron

Hardware Sets

Set: 1.0

Doors: A102A/1

2	Pivot Set	147	626	RF	
2	Electrified Int. Pivot	EM19 QC	626	RF	⚡
1	Removable Mullion	808	628	RU	
1	Exit Device (exit only)	ED4200 M92 MELR	630	RU	⚡
1	Exit Device (exit only)	ED4200 M92	630	RU	⚡
1	Door Pull	RM3301 (full height)	US32D	RO	
2	Overhead Stop	1-X36 (heavy duty concealed)	630	RF	
1	Electromechanical Closer	7122SZ/7113SZ (motion sensing)	689	NO	⚡
1	Door Operator	6010/6020	689	NO	⚡
1	Threshold	273x3AFG MSES25SS		PE	
1	Gasketing	by door supplier			
4	ElectroLynx Harness	QC-C (as needed)		MK	⚡
2	Position Switch	DPS2-M/W-BK		SU	⚡
2	Operator Switch/Post	500		NO	⚡
1	Power Supply	BPS-24 (amps as required)		SU	⚡
1	Wiring Diagrams	elevation and point-to-point			

Notes:
• Opening(s) normally closed and locked from pull side, single pull on latch retraction leaf only.
• Mount card reader on operator post, valid credential to allow use of exterior operator switch.
• Free egress and use of interior operator switch always allowed.
• Motion sensing closer to keep door from closing when movement is detected.
• Coordinate amperage for all openings and consolidate the number power supplies required.

Set: 2.0

Doors: A100A/1, A101A/1, B100A/1, B100B/1

2	Pivot Set	147	626	RF	
2	Electrified Int. Pivot	EM19 QC	626	RF	⚡
1	Removable Mullion	808	628	RU	
1	Exit Device (nightlatch)	ED4200 K157 M92 MELR ACHS MK	630	RU	⚡
1	Exit Device (exit only)	ED4200 M92	630	RU	⚡
1	Door Pull	RM3301 (full height)	US32D	RO	
2	Overhead Stop	1-X36 (heavy duty concealed)	630	RF	

2	Electromechanical Closer	7122SZ/7113SZ (motion sensing)	689	NO	⚡
1	Threshold	273x3AFG MSES25SS		PE	
1	Gasketing	by door supplier			
4	ElectroLynx Harness	QC-C (as needed)		MK	⚡
1	Card Reader	by others			⚡
2	Position Switch	DPS2-M/W-BK		SU	⚡
1	Power Supply	BPS-24 (amps as required)		SU	⚡
1	Wiring Diagrams	elevation and point-to-point			

Notes:
• Opening(s) normally closed and locked from pull side, single pull on latch retraction leaf only.
• Use of valid credential to retract exit device rail to allow pull entry.
• Free egress always allowed from interior via exit device push rail.
• Motion sensing closer to keep door from closing when movement is detected.
• Coordinate amperage for all openings and consolidate the number power supplies required.

Set: 3.0

Doors: A100A/2

2	Pivot Set	147	626	RF	
2	Electrified Int. Pivot	EM19 QC	626	RF	⚡
1	Removable Mullion	808	628	RU	
1	Exit Device (exit only)	ED4200 M92 MELR	630	RU	⚡
1	Exit Device (exit only)	ED4200 M92	630	RU	⚡
2	Overhead Stop	1-X36 (heavy duty concealed)	630	RF	
1	Electromechanical Closer	7122SZ/7113SZ (motion sensing)	689	NO	⚡
1	Door Operator	6010/6020	689	NO	⚡
1	Threshold	273x3AFG MSES25SS		PE	
1	Gasketing	by door supplier			
4	ElectroLynx Harness	QC-C (as needed)		MK	⚡
2	Position Switch	DPS2-M/W-BK		SU	⚡
2	Operator Switch/Post	500		NO	⚡
1	Power Supply	BPS-24 (amps as required)		SU	⚡
1	Wiring Diagrams	elevation and point-to-point			

Notes:
• Opening(s) normally closed and locked from pull side, no trim on the exterior.
• Use of card reader for door A100A/1 (mounted on operator post) to allow use of exterior operator switch.
• Free egress and use of interior operator switch always allowed.
• Motion sensing closer to keep door from closing when movement is detected.
• Coordinate amperage for all openings and consolidate the number power supplies required.

Set: 4.0

Doors: C116/2

2	Pivot Set	147	626	RF
2	Intermediate Pivot	M19	626	RF
1	Removable Mullion	808	628	RU
2	Exit Device (exit only)	ED4200	630	RU
2	Overhead Stop	1-X36 (heavy duty concealed)	630	RF
2	Surface Closer	(P/PRO)7500 M	689	NO
2	Closer Plates	as required	689	NO
1	Threshold	273x3AFG MSES25SS		PE
1	Gasketing	by door supplier		
2	Position Switch	DPS2-M/W-BK		SU

Set: 5.0

Doors: A110/2

1	Pivot Set	147	626	RF
1	Intermediate Pivot	M19	626	RF
1	Cylinder	(as required) ACHS MK	626	RU
1	Locking Pull	LP3301FHB	US32D	RO
1	Overhead Stop	1-X36 (heavy duty concealed)	630	RF
1	Surface Closer	(P/PRO)7500 M	689	NO
1	Closer Plates	as required	689	NO
1	Threshold	273x3AFG MSES25SS		PE
1	Gasketing	by door supplier		
1	Position Switch	DPS2-M/W-BK		SU
1	Sign	RM1110H (PUSH)	US32D	RO
1	Sign	RM1110L (PULL)	US32D	RO

Set: 6.0

Doors: A120/2, A132/2

4	Hinge (heavy weight)	T4A3386 NRP	US32D	MK
2	Hinge (heavy weight)	T4A3386 QC NRP	US32D	MK
1	Removable Mullion	808	628	RU
1	Exit Device (card reader)	ED5200N 1259605 SELP10 ACHS MK	630	RU
1	Exit Device (exit only)	ED5200 M92	630	RU
2	Surface Closer	(P/PRO)7500 M	689	NO
2	Kick Plate	K1050 10" 4BE CSK	US32D	RO
2	Door Stop	RM861/RM855	US26D	RO
1	Threshold	273x3AFG MSES25SS		PE
1	Gasketing	303AS TKSP8		PE
2	Door Bottom	217AV TKSP8		PE
1	Astragal	18041CNB TKSP8		PE
2	Position Switch	DPS2-M/W-BK		SU

1	Power Supply	BPS-24 (amps as required)	SU	⚡

Notes:
• Opening(s) normally closed and locked from pull side.
• Use of valid credential to unlock lever trim to allow entry.
• Free egress always allowed from interior via exit device push rail.
• Coordinate amperage for all openings and consolidate the number power supplies required.

Set: 7.0

5	Hinge	TA2314 NRP	US32D	MK	
1	Hinge	TA2314 QC NRP	US32D	MK	⚡
2	Flush Bolt	555/557 (as needed)	US26D	RO	
1	Dust Proof Strike	570	US26D	RO	
1	Access Control Mort Lock	ML20606 x SELP10-SEC 125Y ACHS MK	626	RU	⚡
1	Surface Closer	(P/PRO)7500 M	689	NO	
2	Kick Plate	K1050 10" 4BE CSK	US32D	RO	
2	Door Stop	RM861/RM855	US26D	RO	
1	Threshold	273x3AFG MSES25SS		PE	
1	Gasketing	303AS TKSP8		PE	
2	Door Bottom	217AV TKSP8		PE	
2	ElectroLynx Harness	QC-C (as needed)		MK	⚡
1	Power Supply	BPS-24 (amps as required)		SU	⚡
1	Wiring Diagrams	elevation and point-to-point			

Notes:
• NO DOORS CURRENTLY IN THIS SET.
• Opening(s) normally closed and locked.
• Use of valid credential to unlock lever trim to allow entry.
• Free egress always allowed from interior.
• Coordinate amperage for all openings and consolidate the number power supplies required.

Set: 8.0

Doors: A122G/1

2	Hinge	TA2314 NRP	US32D	MK	
1	Hinge	TA2314 QC NRP	US32D	MK	⚡
1	Access Control Mort Lock	ML20606 x SELP10-SEC 125Y ACHS MK	626	RU	⚡
1	Surface Closer	(P/PRO)7500 M	689	NO	
1	Kick Plate	K1050 10" 4BE CSK	US32D	RO	
1	Door Stop	RM861/RM855	US26D	RO	
1	Threshold	273x3AFG MSES25SS		PE	
1	Gasketing	303AS TKSP8		PE	
1	Door Bottom	217AV TKSP8		PE	

2	ElectroLynx Harness	QC-C (as needed)	MK	⚡
1	Power Supply	BPS-24 (amps as required)	SU	⚡
1	Wiring Diagrams	elevation and point-to-point		

Notes:
• Opening(s) normally closed and locked.
• Use of valid credential to unlock lever trim to allow entry.
• Free egress always allowed from interior.
• Coordinate amperage for all openings and consolidate the number power supplies required.

Set: 9.0

Doors: A135A/1, A201B/1, M100/1

3	Hinge	TA2314 NRP	US32D	MK	
1	Storeroom Lock	ML2057 125Y ACHS MK	626	RU	
1	Surface Closer	(P/PRO)7500 M	689	NO	
1	Kick Plate	K1050 10" 4BE CSK	US32D	RO	
1	Door Stop	RM861/RM855	US26D	RO	
1	Threshold	273x3AFG MSES25SS		PE	
1	Gasketing	303AS TKSP8		PE	
1	Door Bottom	217AV TKSP8		PE	

Set: 10.0

Doors: A134/4, B100A/2, B100B/2

2	Pivot Set	147	626	RF	
2	Electrified Int. Pivot	EM19 QC	626	RF	⚡
1	Removable Mullion	808	628	RU	
1	Exit Device (nightlatch)	ED4200 K157 M92 MELR ACHS MK	630	RU	⚡
1	Exit Device (exit only)	ED4200 M92	630	RU	⚡
1	Door Pull	RM3301 (full height)	US32D	RO	
2	Electromechanical Closer	7122SZ/7113SZ (motion sensing)	689	NO	⚡
2	Door Stop	RM861/RM855	US26D	RO	
4	ElectroLynx Harness	QC-C (as needed)		MK	⚡
1	Card Reader	by others			⚡
2	Position Switch	DPS2-M/W-BK		SU	⚡
1	Power Supply	BPS-24 (amps as required)		SU	⚡
1	Wiring Diagrams	elevation and point-to-point			

Notes:
• Opening(s) normally closed and locked from pull side, single pull on latch retraction leaf only.
• Use of valid credential to retract exit device rail to allow entry.
• Free egress always allowed from interior via exit device push rail.
• Motion sensing closer to keep door from closing when movement is detected.
• Coordinate amperage for all openings and consolidate the number power supplies required.

Set: 11.0

Doors: A100A/3, A101A/2

2	Pivot Set	147	626	RF	
2	Electrified Int. Pivot	EM19 QC	626	RF	⚡
1	Removable Mullion	808	628	RU	
1	Exit Device (nightlatch)	ED4200 K157 M92 MELR ACHS MK	630	RU	⚡
1	Exit Device (exit only)	ED4200 M92	630	RU	⚡
1	Door Pull	RM3301 (full height)	US32D	RO	
2	Overhead Stop	1-X36 (heavy duty concealed)	630	RF	
2	Electromechanical Closer	7122SZ/7113SZ (motion sensing)	689	NO	⚡
4	ElectroLynx Harness	QC-C (as needed)		MK	⚡
1	Card Reader	by others			⚡
2	Position Switch	DPS2-M/W-BK		SU	⚡
1	Power Supply	BPS-24 (amps as required)		SU	⚡
1	Wiring Diagrams	elevation and point-to-point			

Notes:
• Opening(s) normally closed and locked from pull side, single pull on latch retraction leaf only.
• Use of valid credential to retract exit device rail to allow entry.
• Free egress always allowed from interior via exit device push rail.
• Motion sensing closer to keep door from closing when movement is detected.
• Coordinate amperage for all openings and consolidate the number power supplies required.

Set: 12.0

Doors: A100A/4

2	Pivot Set	147	626	RF	
2	Electrified Int. Pivot	EM19 QC	626	RF	⚡
1	Removable Mullion	808	628	RU	
1	Exit Device (exit only)	ED4200 M92 MELR	630	RU	⚡
1	Exit Device (exit only)	ED4200 M92	630	RU	⚡
2	Overhead Stop	1-X36 (heavy duty concealed)	630	RF	
1	Electromechanical Closer	7122SZ/7113SZ (motion sensing)	689	NO	⚡
1	Door Operator	6010/6020	689	NO	⚡
4	ElectroLynx Harness	QC-C (as needed)		MK	⚡
2	Position Switch	DPS2-M/W-BK		SU	⚡
2	Operator Switch/Post	500		NO	⚡
1	Power Supply	BPS-24 (amps as required)		SU	⚡
1	Wiring Diagrams	elevation and point-to-point			

Notes:

• Opening(s) normally closed and locked from pull side, no trim on the exterior.
• Use of card reader for door A100A/3 (mounted on operator post) to allow use of exterior operator switch.
• Free egress and use of interior operator switch always allowed.
• Motion sensing closer to keep door from closing when movement is detected.
• Coordinate amperage for all openings and consolidate the number power supplies required.

Set: 13.0

Doors: A103/1

1	Pivot Set	147	626	RF
1	Electrified Int. Pivot	EM19 QC	626	RF
1	Access Control Mort Lock	ML20606 x SELP10-SEC 125Y ACHS MK	626	RU
1	Surface Closer	(P/PRO)7500 M	689	NO
1	Closer Plates	as required	689	NO
1	Door Stop	RM861/RM855	US26D	RO
1	ElectroLynx Harness	QC-C (as needed)		MK
1	Power Supply	BPS-24 (amps as required)		SU
1	Wiring Diagrams	elevation and point-to-point		

Notes:
• Opening(s) normally closed and locked.
• Use of valid credential to unlock lever trim to allow entry.
• Free egress always allowed from interior.
• Coordinate required rail width to accommodate lockset.
• Coordinate amperage for all openings and consolidate the number power supplies required.

Set: 14.0

Doors: A125/1, A125/2

2	Pivot Set	147	626	RF
2	Intermediate Pivot	M19	626	RF
2	Cylinder	(as required) ACHS MK	626	RU
2	Locking Pull	LP3301FHB	US32D	RO
2	Surface Closer	(P/PRO)7500 M	689	NO
2	Door Stop	RM861/RM855	US26D	RO
1	Sign	RM1110H (PUSH)	US32D	RO
1	Sign	RM1110L (PULL)	US32D	RO

Set: 15.0

Doors: A102A/2

2	Pivot Set	147	626	RF
2	Intermediate Pivot	M19	626	RF
4	Door Pull	RM3301 (full height)	US32D	RO
2	Overhead Stop	1-X36 (heavy duty concealed)	630	RF

2	Surface Closer	(P/PRO)7500 M	689	NO
2	Closer Plates	as required	689	NO
2	Sign	RM1110H (PUSH)	US32D	RO
2	Sign	RM1110L (PULL)	US32D	RO

Set: 16.0

Doors: A110/1

1	Pivot Set	147	626	RF
1	Intermediate Pivot	M19	626	RF
2	Door Pull	RM3301 (full height)	US32D	RO
1	Door Stop	RM861/RM855	US26D	RO
1	Sign	RM1110H (PUSH)	US32D	RO
1	Sign	RM1110L (PULL)	US32D	RO

Set: 17.0

Doors: A134/1

6	Hinge (heavy weight)	T4A3786	US26D	MK	
2	Hinge (heavy weight)	T4A3786 QC	US26D	MK	⚡
1	Removable Mullion	808	628	RU	
1	Exit Device (card reader)	ED5200N 1259605 SELP10 ACHS MK	630	RU	⚡
1	Exit Device (exit only)	ED5200 M92	630	RU	⚡
2	Surface Closer	(P/PRO)7500 M	689	NO	
2	Kick Plate	K1050 10" 4BE CSK	US32D	RO	
2	Electromagnetic Holder	980/994	689	RF	⚡
1	Gasketing	S44BL (rated openings only)		PE	
1	Astragal	18041CNB TKSP8 (rated openings only)		PE	
2	Silencer	608 (at non rated openings)		RO	
4	ElectroLynx Harness	QC-C (as needed)		MK	⚡
2	Position Switch	DPS2-M/W-BK		SU	⚡
1	Power Supply	BPS-24 (amps as required)		SU	⚡

Notes:
- Opening(s) normally closed and locked from pull side.
- Use of valid credential to unlock lever trim to allow entry.
- Free egress always allowed from interior via exit device push rail.
- Coordinate amperage for all openings and consolidate the number power supplies required.

Set: 17.1

Doors: A133/2

6	Hinge (heavy weight)	T4A3786	US26D	MK
1	Removable Mullion	808	628	RU

2	Exit Device (storeroom)	ED5200(A) 125959 ACHS MK	630	RU
2	Exit Device (exit only)	ED5200(A) EO	630	RU
2	Surface Closer	(P/PRO)7500 M	689	NO
2	Kick Plate	K1050 10" 4BE CSK	US32D	RO
2	Door Stop	RM861/RM855	US26D	RO
1	Gasketing	S44BL (rated openings only)		PE
1	Astragal	18041CNB TKSP8 (rated openings only)		PE
2	Silencer	608 (at non rated openings)		RO

Set: 17.2

Doors: A133/1

3	Hinge (heavy weight)	T4A3786	US26D	MK
1	Exit Device (storeroom)	ED5200(A) 125959 ACHS MK	630	RU
1	Surface Closer	(P/PRO)7500 M	689	NO
1	Kick Plate	K1050 10" 4BE CSK	US32D	RO
1	Door Stop	RM861/RM855	US26D	RO
1	Gasketing	S44BL (rated openings only)		PE
3	Silencer	608 (at non rated openings)		RO

Set: 18.0

Doors: A120/1, A121/1, A121/2, A121/3

6	Hinge (heavy weight)	T4A3786	US26D	MK
1	Removable Mullion	808	628	RU
2	Exit Device (classroom intruder)	ED5202(A) 125955 ACHS MK	630	RU
2	Surface Closer	(P/PRO)7500 M	689	NO
2	Kick Plate	K1050 10" 4BE CSK	US32D	RO
2	Door Stop	RM861/RM855	US26D	RO
1	Gasketing	S44BL (rated openings only)		PE
1	Astragal	18041CNB TKSP8 (rated openings only)		PE
2	Silencer	608 (at non rated openings)		RO

Set: 19.0

Doors: A134/2, A134/3, A134/5, C116/3

8	Hinge (heavy weight)	T4A3786	US26D	MK
1	Removable Mullion	808	628	RU
2	Exit Device (passage)	ED5200(A) 125910	630	RU
2	Surface Closer	(P/PRO)7500 M	689	NO
2	Kick Plate	K1050 10" 4BE CSK	US32D	RO
2	Electromagnetic Holder	980/994	689	RF
1	Gasketing	S44BL (rated openings only)		PE
1	Astragal	18041CNB TKSP8 (rated openings only)		PE

2	Silencer	608 (at non rated openings)		RO

Set: 20.0

Doors: C116/1

6	Hinge (heavy weight)	T4A3786	US26D	MK
1	Removable Mullion	808	628	RU
2	Exit Device (passage)	ED5200(A) 125910	630	RU
2	Surface Closer	(P/PRO)7500 M	689	NO
2	Kick Plate	K1050 10" 4BE CSK	US32D	RO
2	Door Stop	RM861/RM855	US26D	RO
1	Gasketing	S44BL (rated openings only)		PE
1	Astragal	18041CNB TKSP8 (rated openings only)		PE
2	Silencer	608 (at non rated openings)		RO

Set: 21.0

Doors: A104/1

2	Hinge	TA2714	US26D	MK
1	Hinge	TA2714 QC	US26D	MK
1	Access Control Mort Lock	ML20606 x SELP10-SEC 125Y ACHS MK	626	RU
1	Surface Closer	(P/PRO)7500 M	689	NO
1	Kick Plate	K1050 10" 4BE CSK	US32D	RO
1	Door Stop	RM861/RM855	US26D	RO
1	Gasketing	S44BL (rated openings only)		PE
3	Silencer	608 (at non rated openings)		RO
2	ElectroLynx Harness	QC-C (as needed)		MK
1	Power Supply	BPS-24 (amps as required)		SU
1	Wiring Diagrams	elevation and point-to-point		

Notes:
• Opening(s) normally closed and locked.
• Use of valid credential to unlock lever trim to allow entry.
• Free egress always allowed from interior.
• Coordinate amperage for all openings and consolidate the number power supplies required.

Set: 22.0

Doors: A103/2

2	Hinge	TA2714	US26D	MK
1	Hinge	TA2714 QC	US26D	MK
1	Access Control Mort Lock	ML20606 x SELP10-SEC 125Y ACHS MK	626	RU
1	Surface Closer	(P/PRO)7500 M	689	NO

1	Kick Plate	K1050 10" 4BE CSK	US32D	RO
1	Door Stop	RM861/RM855	US26D	RO
1	Gasketing	S44BL (rated openings only)		PE
3	Silencer	608 (at non rated openings)		RO
2	ElectroLynx Harness	QC-C (as needed)		MK
1	Push Button	PB4L-2		SU
1	Power Supply	BPS-24 (amps as required)		SU
1	Wiring Diagrams	elevation and point-to-point		

Notes:
• Opening(s) normally closed and locked.
• Use of valid credential or remote button to unlock lever trim to allow entry.
• Free egress always allowed from interior.
• Coordinate amperage for all openings and consolidate the number power supplies required.

Set: 23.0

6	Hinge	TA2714	US26D	MK
2	Flush Bolt	555/557 (as needed)	US26D	RO
1	Dust Proof Strike	570	US26D	RO
1	Storeroom Lock	ML2057 125Y ACHS MK	626	RU
2	Kick Plate	K1050 10" 4BE CSK	US32D	RO
2	Door Stop	RM861/RM855	US26D	RO
2	Silencer	608		RO

Notes:
• NO DOORS CURRENTLY IN THIS SET.

Set: 24.0

Doors: A132/1

6	Hinge	TA2714	US26D	MK
2	Flush Bolt	555/557 (as needed)	US26D	RO
1	Dust Proof Strike	570	US26D	RO
1	Storeroom Lock	ML2057 125Y ACHS MK	626	RU
1	Surface Closer	(P/PRO)7500 M	689	NO
2	Kick Plate	K1050 10" 4BE CSK	US32D	RO
2	Door Stop	RM861/RM855	US26D	RO
1	Gasketing	S44BL (rated openings only)		PE
1	Astragal	18041CNB TKSP8 (rated openings only)		PE
2	Silencer	608 (at non rated openings)		RO

Set: 25.0

Doors: C100A/1, C200A/1

6	Hinge	TA2714	US26D	MK
2	Flush Bolt	555/557 (as needed)	US26D	RO
1	Dust Proof Strike	570	US26D	RO
1	Storeroom Lock	ML2057 125Y ACHS MK	626	RU
1	Overhead Stop	10-X36 (surface)	630	RF
1	Surface Closer	CPS7500 M (stop arm)	689	NO
2	Kick Plate	K1050 10" 4BE CSK	US32D	RO
1	Gasketing	S44BL (rated openings only)		PE
1	Astragal	18041CNB TKSP8 (rated openings only)		PE
2	Silencer	608 (at non rated openings)		RO

Set: 26.0

Doors: A128/1, C111/1, C212/1

3	Hinge	TA2714	US26D	MK
1	Storeroom Lock	ML2057 125Y ACHS MK	626	RU
1	Surface Closer	(P/PRO)7500 M	689	NO
1	Kick Plate	K1050 10" 4BE CSK	US32D	RO
1	Door Stop	RM861/RM855	US26D	RO
1	Gasketing	S44BL (rated openings only)		PE
3	Silencer	608 (at non rated openings)		RO

Set: 27.0

Doors: A101B/1, A101B/2, B100C/1, B106/1, B111/1, C106D/1, C206D/1

3	Hinge	TA2714	US26D	MK
1	Storeroom Lock	ML2057 125Y ACHS MK	626	RU
1	Surface Closer	CPS7500 M (stop arm)	689	NO
1	Kick Plate	K1050 10" 4BE CSK	US32D	RO
1	Gasketing	S44BL (rated openings only)		PE
3	Silencer	608 (at non rated openings)		RO

Set: 28.0

Doors: A106/1, A108/1, A108/2, A109/1, A120A/1, A122H/1, C101A/1, C101B/1

3	Hinge	TA2714	US26D	MK
1	Entrance Lock	ML2054 125Y ACHS MK	626	RU
1	Kick Plate	K1050 10" 4BE CSK	US32D	RO
1	Door Stop	RM861/RM855	US26D	RO
3	Silencer	608 (at non rated openings)		RO

Set: 29.0

6	Hinge	TA2714	US26D	MK

2	Flush Bolt	555/557 (as needed)	US26D	RO
1	Dust Proof Strike	570	US26D	RO
1	Classroom Lock	ML2055 125Y ACHS MK	626	RU
2	Kick Plate	K1050 10" 4BE CSK	US32D	RO
2	Door Stop	RM861/RM855	US26D	RO
2	Silencer	608 (at non rated openings)		RO

Notes:
• NO DOORS CURRENTLY IN THIS SET.

Set: 30.0

Doors: A120B/1

6	Hinge	TA2714	US26D	MK
2	Flush Bolt	555/557 (as needed)	US26D	RO
1	Dust Proof Strike	570	US26D	RO
1	Classroom Lock	ML2055 125Y ACHS MK	626	RU
2	Overhead Stop	10-X36 (surface)	630	RF
2	Kick Plate	K1050 10" 4BE CSK	US32D	RO
2	Silencer	608 (at non rated openings)		RO

Set: 31.0

Doors: A114A/1, A119A/1, A121A/1, A122D/1, A126, A126/1, A131A/1, B101B/1, C100B/1

3	Hinge	TA2714	US26D	MK
1	Classroom Lock	ML2055 125Y ACHS MK	626	RU
1	Kick Plate	K1050 10" 4BE CSK	US32D	RO
1	Door Stop	RM861/RM855	US26D	RO
3	Silencer	608 (at non rated openings)		RO

Set: 32.0

Doors: A103B/1, A103B/2, A119/2, A122A/1, A122A/2

3	Hinge	TA2714	US26D	MK
1	Classroom Lock	ML2055 125Y ACHS MK	626	RU
1	Overhead Stop	10-X36 (surface)	630	RF
1	Kick Plate	K1050 10" 4BE CSK	US32D	RO
3	Silencer	608 (at non rated openings)		RO

Set: 33.0

Doors: A105/1, A122C/1, A129/1, B101A/1

3	Hinge	TA2714	US26D	MK
1	Classroom Lock	ML2055 125Y ACHS MK	626	RU

1	Surface Closer	(P/PRO)7500 M	689	NO
1	Kick Plate	K1050 10" 4BE CSK	US32D	RO
1	Door Stop	RM861/RM855	US26D	RO
1	Gasketing	S44BL (rated openings only)		PE
3	Silencer	608 (at non rated openings)		RO

Set: 34.0

Doors: A111/1, A112/1, A113/1, A114/1, A131/1, B107/1, B110/1, C107/1, C110/1, C207/1, C210/1

3	Hinge	TA2714	US26D	MK
1	Classroom Intruder Lock	ML2052 125Y ACHS MK	626	RU
1	Kick Plate	K1050 10" 4BE CSK	US32D	RO
1	Door Stop	RM861/RM855	US26D	RO
3	Silencer	608		RO

Set: 35.0

Doors: A103/3

3	Hinge	TA2714	US26D	MK
1	Classroom Intruder Lock	ML2052 125Y ACHS MK	626	RU
1	Overhead Stop	10-X36 (surface)	630	RF
1	Kick Plate	K1050 10" 4BE CSK	US32D	RO
3	Silencer	608		RO

Set: 36.0

Doors: A130/1, A130/2

3	Hinge	TA2714	US26D	MK
1	Classroom Intruder Lock	ML2052 125Y ACHS MK	626	RU
1	Surface Closer	(P/PRO)7500 M	689	NO
1	Kick Plate	K1050 10" 4BE CSK	US32D	RO
1	Door Stop	RM861/RM855	US26D	RO
1	Gasketing	S44BL (rated openings only)		PE
3	Silencer	608 (at non rated openings)		RO

Set: 37.0

Doors: A118/1, A119/1, B101/1, B102/1, B103/1, B104/1, B105/1, B108/1, B109/1, B112/1, B113/1, C101/1, C102/1, C103/1, C104/1, C105/1, C108/1, C109/1, C112/1, C113/1, C200B/1, C201/1, C202/1, C202A/1, C203/1, C204/1, C205/1, C208/1, C209/1, C211/1, C213/1, C214/1, alternate doors B114/1, B115/1, C114/1, C115/1, C215/1, C216/1

3	Hinge	TA2714	US26D	MK
1	Classroom Intruder Lock	ML2052 125Y ACHS MK	626	RU
1	Surface Closer	(P/PRO)7500 DA M (delayed action)	689	NO
1	Kick Plate	K1050 10" 4BE CSK	US32D	RO

1	Door Stop	RM861/RM855	US26D	RO
1	Gasketing	S44BL (rated openings only)		PE
3	Silencer	608 (at non rated openings)		RO

Set: 38.0

Doors: A124/1, B100D/1, C106C/1, C206C/1

3	Hinge	TA2714	US26D	MK
1	Hotel Lock	ML2029 125Y M19V ACHS MK	626	RU
1	Kick Plate	K1050 10" 4BE CSK	US32D	RO
1	Door Stop	RM861/RM855	US26D	RO
3	Silencer	608		RO
1	Coat Hook	RM802	US26D	RO

Set: 39.0

Doors: A107/1, A117/1, A122K/1, A130A/1, B102A/1, B103A/1, B104A/1, B105A/1, B108A/1, B109A/1, B112A/1, B113A/1, and alternate doors B114A/1, B115A/1

3	Hinge	TA2714	US26D	MK
1	Privacy Set	ML2020 125Y M19V	626	RU
1	Kick Plate	K1050 10" 4BE CSK	US32D	RO
1	Door Stop	RM861/RM855	US26D	RO
3	Silencer	608		RO
1	Coat Hook	RM802	US26D	RO

Set: 40.0

Doors: A116/1, A122J/1

3	Hinge	TA2714	US26D	MK
1	Passage Latch	ML2010 125Y	626	RU
1	Kick Plate	K1050 10" 4BE CSK	US32D	RO
1	Door Stop	RM861/RM855	US26D	RO
3	Silencer	608		RO

Set: 41.0

Doors: A123A/1, A123B/1

3	Hinge (heavy weight)	T4A3786	US26D	MK
1	Deadbolt	DL4122 ACHS MK	626	RU
1	Door Pull	RM3301-24	US32D	RO
1	Push Plate	RM1030H	US32D	RO
1	Electromechanical Closer	7122SZ/7113SZ (motion sensing)	689	NO ⚡
1	Kick Plate	K1050 10" 4BE CSK	US32D	RO
1	Door Stop	RM861/RM855	US26D	RO

3	Silencer	608	RO

Notes:
• Motion sensing closer to keep door from closing when movement is detected.

Set: 42.0

Doors: A122A/3, A122B/1, M100/2, M100/3

1	All Hardware	by others	

Set: 43.0

1	Test Unit	WT1	SA

END OF SECTION 080671

SECTION 081113 - HOLLOW METAL DOORS AND FRAMES

PART 1 - GENERAL

1.1 RELATED DOCUMENTS

A. Drawings and general provisions of the Contract, including General and Supplementary Conditions and Division 01 Specification Sections, apply to this Section.

1.2 SUMMARY

A. Section includes:

1. Interior standard steel doors and frames.
2. Exterior standard steel doors and frames.

B. Related Requirements:

1. Section 087100 "Door Hardware" for door hardware for hollow-metal doors.

1.3 DEFINITIONS

A. Minimum Thickness: Minimum thickness of base metal without coatings according to NAAMM-HMMA 803 or SDI A250.8.

1.4 COORDINATION

A. Coordinate anchorage installation for hollow-metal frames. Furnish setting drawings, templates, and directions for installing anchorages, including sleeves, concrete inserts, anchor bolts, and items with integral anchors. Deliver such items to Project site in time for installation.

B. Coordinate requirements for installation of door hardware, electrified door hardware, and access control and security systems.

1.5 PREINSTALLATION MEETINGS

A. Preinstallation Conference: Conduct conference at Project site.

1.6 ACTION SUBMITTALS

A. Product Data: For each type of product.

1. Include construction details, material descriptions, core descriptions, fire-resistance ratings, temperature-rise ratings, and finishes.

B. Shop Drawings: Include the following:

1. Elevations of each door type.
2. Details of doors, including vertical- and horizontal-edge details and metal thicknesses.
3. Frame details for each frame type, including dimensioned profiles and metal thicknesses.
4. Locations of reinforcement and preparations for hardware.
5. Details of each different wall opening condition.
6. Details of electrical raceway and preparation for electrified hardware, access control systems, and security systems.
7. Details of anchorages, joints, field splices, and connections.
8. Details of accessories.
9. Details of moldings, removable stops, and glazing.

C. Samples for Initial Selection: For hollow-metal doors and frames with factory-applied color finishes.

D. Samples for Verification:

1. Finishes: For each type of exposed finish required, prepared on Samples of not less than 3 by 5 inches (75 by 127 mm).

E. Product Schedule: For hollow-metal doors and frames, prepared by or under the supervision of supplier, using same reference numbers for details and openings as those on Drawings. Coordinate with final door hardware schedule.

1.7 INFORMATIONAL SUBMITTALS

A. Product Test Reports: For each type of hollow-metal door and frame assembly, for tests performed by a qualified testing agency.

B. Oversize Construction Certification: For assemblies required to be fire-rated and exceeding limitations of labeled assemblies.

1.8 DELIVERY, STORAGE, AND HANDLING

A. Deliver hollow-metal doors and frames palletized, packaged, or crated to provide protection during transit and Project-site storage. Do not use nonvented plastic.

1. Provide additional protection to prevent damage to factory-finished units.

B. Deliver welded frames with two removable spreader bars across bottom of frames, tack welded to jambs and mullions.

C. Store hollow-metal doors and frames vertically under cover at Project site with head up. Place on minimum 4-inch- (102-mm-) high wood blocking. Provide minimum 1/4-inch (6-mm) space between each stacked door to permit air circulation.

PART 2 - PRODUCTS

2.1 MANUFACTURERS

A. Manufacturers: Subject to compliance with requirements, provide products by one of the following:

1. Ceco Door; ASSA ABLOY.

2. Curries Company; ASSA ABLOY.
3. Republic Doors and Frames.
4. Steelcraft; an Allegion brand.

2.2 PERFORMANCE REQUIREMENTS

A. Fire-Rated Assemblies: Complying with NFPA 80 and listed and labeled by a qualified testing agency acceptable to authorities having jurisdiction for fire-protection ratings and temperature-rise limits indicated, based on testing at positive pressure according to NFPA 252 or UL 10C.

1. Smoke- and Draft-Control Assemblies: Provide assemblies with gaskets listed and labeled for smoke and draft control by a qualified testing agency acceptable to authorities having jurisdiction, based on testing according to UL 1784 and installed in compliance with NFPA 105.
2. Oversize Fire-Rated Door Assemblies: For units exceeding sizes of tested assemblies, provide certification by a qualified testing agency that doors comply with standard construction requirements for tested and labeled fire-rated door assemblies except for size.
3. Temperature-Rise Limit: At vertical exit enclosures and exit passageways, provide doors that have a maximum transmitted temperature end point of not more than 450 deg F (250 deg C) above ambient after 30 minutes of standard fire-test exposure.

B. Fire-Rated, Borrowed-Lite Assemblies: Complying with NFPA 80 and listed and labeled by a qualified testing agency acceptable to authorities having jurisdiction, for fire-protection ratings indicated, based on testing according to NFPA 257 or UL 9.

C. Thermally Rated Door Assemblies: Provide door assemblies with U-factor of not more than 0.50 deg Btu/F x h x sq. ft. (2.84 W/K x sq. m) when tested according to ASTM C 518.

2.3 INTERIOR STANDARD STEEL DOORS AND FRAMES

A. Construct hollow-metal doors and frames to comply with standards indicated for materials, fabrication, hardware locations, hardware reinforcement, tolerances, and clearances, and as specified.

B. Heavy-Duty Doors: SDI A250.8, Level 2.

1. Physical Performance: Level B according to SDI A250.4.
2. Doors:

a. Type: As indicated in the Door and Frame Schedule.
b. Thickness: 1-3/4 inches (44.5 mm).
c. Face: Uncoated, cold-rolled steel sheet, minimum thickness of 0.042 inch (1.0 mm).
d. Edge Construction: Model 1, Full Flush.
e. Core: Manufacturer's standard kraft-paper honeycomb, polystyrene, polyurethane, polyisocyanurate, mineral-board, or vertical steel-stiffener core at manufacturer's discretion.

3. Exposed Finish: Prime.

C. Extra-Heavy-Duty Frames: SDI A250.8, Level 3.

1. Physical Performance: Level A according to SDI A250.4.
2. Frames:

a. Materials: Uncoated, steel sheet, minimum thickness of 0.053 inch (1.3 mm).

b. Sidelite and Transom Frames: Fabricated from same thickness material as adjacent door frame.
c. Construction: Face welded.

3. Exposed Finish: Prime.

2.4 EXTERIOR STANDARD STEEL DOORS AND FRAMES

A. Construct hollow-metal doors and frames to comply with standards indicated for materials, fabrication, hardware locations, hardware reinforcement, tolerances, and clearances, and as specified.

B. Extra-Heavy-Duty Doors: SDI A250.8, Level 3.

1. Physical Performance: Level A according to SDI A250.4.
2. Doors:

a. Type: As indicated in the Door and Frame Schedule.
b. Thickness: 1-3/4 inches (44.5 mm.)
c. Face: Metallic-coated steel sheet, minimum thickness of 0.053 inch (1.3 mm), with minimum A40 (ZF120) coating.
d. Edge Construction: Model 1, Full Flush.
e. Core: Polyurethane.

3. Exposed Finish: Prime.

C. Maximum-Duty Frames: SDI A250.8, Level 4.

1. Physical Performance: Level A according to SDI A250.4.
2. Frames:

a. Materials: Metallic-coated steel sheet, minimum thickness of 0.067 inch (1.7 mm), with minimum A40 (ZF120) coating.
b. Construction: Face welded.
c. Thermally broken.

3. Exposed Finish: Prime.

2.5 BORROWED LITES

A. Fabricate of uncoated steel sheet, minimum thickness of 0.053 inch (1.3 mm).

B. Construction: Face welded.

C. Fabricate in one piece except where handling and shipping limitations require multiple sections. Where frames are fabricated in sections due to shipping or handling limitations, provide alignment plates or angles at each joint, fabricated of metal of same or greater thickness as metal as frames.

D. Provide countersunk, flat- or oval-head exposed screws and bolts for exposed fasteners unless otherwise indicated.

2.6 HOLLOW-METAL PANELS

A. Provide hollow-metal panels of same materials, construction, and finish as adjacent door assemblies.

2.7 FRAME ANCHORS

A. Jamb Anchors:

1. Type: Anchors of minimum size and type required by applicable door and frame standard, and suitable for performance level indicated.
2. Quantity: Minimum of three anchors per jamb, with one additional anchor for frames with no floor anchor. Provide one additional anchor for each 24 inches (610 mm) of frame height above 7 feet (2.1 m).
3. Postinstalled Expansion Anchor: Minimum 3/8-inch- (9.5-mm-) diameter bolts with expansion shields or inserts, with manufacturer's standard pipe spacer.

B. Floor Anchors: Provide floor anchors for each jamb and mullion that extends to floor.

C. Floor Anchors for Concrete Slabs with Underlayment: Adjustable-type anchors with extension clips, allowing not less than 2-inch (51-mm) height adjustment. Terminate bottom of frames at top of underlayment.

D. Material: ASTM A 879/A 879M, Commercial Steel (CS), 04Z (12G) coating designation; mill phosphatized.

1. For anchors built into exterior walls, steel sheet complying with ASTM A 1008/A 1008M or ASTM A 1011/A 1011M; hot-dip galvanized according to ASTM A 153/A 153M, Class B.

2.8 MATERIALS

A. Cold-Rolled Steel Sheet: ASTM A 1008/A 1008M, Commercial Steel (CS), Type B; suitable for exposed applications.

B. Hot-Rolled Steel Sheet: ASTM A 1011/A 1011M, Commercial Steel (CS), Type B; free of scale, pitting, or surface defects; pickled and oiled.

C. Metallic-Coated Steel Sheet: ASTM A 653/A 653M, Commercial Steel (CS), Type B.

D. Inserts, Bolts, and Fasteners: Hot-dip galvanized according to ASTM A 153/A 153M.

E. Power-Actuated Fasteners in Concrete: Fastener system of type suitable for application indicated, fabricated from corrosion-resistant materials, with clips or other accessory devices for attaching hollow-metal frames of type indicated.

F. Mineral-Fiber Insulation: ASTM C 665, Type I (blankets without membrane facing); consisting of fibers manufactured from slag or rock wool; with maximum flame-spread and smoke-developed indexes of 25 and 50, respectively; passing ASTM E 136 for combustion characteristics.

G. Glazing: Comply with requirements in Section 088000 "Glazing."

2.9 FABRICATION

A. Door Astragals: Provide overlapping astragal on one leaf of pairs of doors where required by NFPA 80 for fire-performance rating or where indicated. Extend minimum 3/4 inch (19 mm) beyond edge of door on which astragal is mounted or as required to comply with published listing of qualified testing agency.

B. Hollow-Metal Frames: Fabricate in one piece except where handling and shipping limitations require multiple sections. Where frames are fabricated in sections, provide alignment plates or angles at each joint, fabricated of metal of same or greater thickness as frames.

1. Sidelite and Transom Bar Frames: Provide closed tubular members with no visible face seams or joints, fabricated from same material as door frame. Fasten members at crossings and to jambs by welding.
2. Provide countersunk, flat- or oval-head exposed screws and bolts for exposed fasteners unless otherwise indicated.
3. Door Silencers: Except on weather-stripped frames, drill stops to receive door silencers as follows. Keep holes clear during construction.

a. Single-Door Frames: Drill stop in strike jamb to receive three door silencers.
b. Double-Door Frames: Drill stop in head jamb to receive two door silencers.

C. Hardware Preparation: Factory prepare hollow-metal doors and frames to receive templated mortised hardware, and electrical wiring; include cutouts, reinforcement, mortising, drilling, and tapping according to SDI A250.6, the Door Hardware Schedule, and templates.

1. Reinforce doors and frames to receive nontemplated, mortised, and surface-mounted door hardware.
2. Comply with BHMA A156.115 for preparing hollow-metal doors and frames for hardware.

D. Glazed Lites: Provide stops and moldings around glazed lites where indicated. Form corners of stops and moldings with mitered hairline joints.

1. Provide stops and moldings flush with face of door, and with square stops unless otherwise indicated.
2. Multiple Glazed Lites: Provide fixed and removable stops and moldings so that each glazed lite is capable of being removed independently.
3. Provide fixed frame moldings on outside of exterior and on secure side of interior doors and frames. Provide loose stops and moldings on inside of hollow-metal doors and frames.
4. Coordinate rabbet width between fixed and removable stops with glazing and installation types indicated.
5. Provide stops for installation with countersunk flat- or oval-head machine screws spaced uniformly not more than 9 inches (230 mm) o.c. and not more than 2 inches (51 mm) o.c. from each corner.

2.10 STEEL FINISHES

A. Prime Finish: Clean, pretreat, and apply manufacturer's standard primer.

1. Shop Primer: Manufacturer's standard, fast-curing, lead- and chromate-free primer complying with SDI A250.10; recommended by primer manufacturer for substrate; compatible with substrate and field-applied coatings despite prolonged exposure.

PART 3 - EXECUTION

3.1 PREPARATION

A. Remove welded-in shipping spreaders installed at factory. Restore exposed finish by grinding, filling, and dressing, as required to make repaired area smooth, flush, and invisible on exposed faces. Touch up factory-applied finishes where spreaders are removed.

B. Drill and tap doors and frames to receive nontemplated, mortised, and surface-mounted door hardware.

3.2 INSTALLATION

A. General: Install hollow-metal doors and frames plumb, rigid, properly aligned, and securely fastened in place. Comply with approved Shop Drawings and with manufacturer's written instructions.

B. Hollow-Metal Frames: Comply with SDI A250.11.

1. Set frames accurately in position; plumbed, aligned, and braced securely until permanent anchors are set. After wall construction is complete, remove temporary braces without damage to completed Work.

    a. Where frames are fabricated in sections, field splice at approved locations by welding face joint continuously; grind, fill, dress, and make splice smooth, flush, and invisible on exposed faces. Touch-up finishes.
    b. Install frames with removable stops located on secure side of opening.

2. Fire-Rated Openings: Install frames according to NFPA 80.
3. Floor Anchors: Secure with postinstalled expansion anchors.

    a. Floor anchors may be set with power-actuated fasteners instead of postinstalled expansion anchors if so indicated and approved on Shop Drawings.

4. Solidly pack mineral-fiber insulation inside frames.
5. Masonry Walls: Coordinate installation of frames to allow for solidly filling space between frames and masonry with grout or mortar.
6. Installation Tolerances: Adjust hollow-metal frames to the following tolerances:

    a. Squareness: Plus or minus 1/16 inch (1.6 mm), measured at door rabbet on a line 90 degrees from jamb perpendicular to frame head.
    b. Alignment: Plus or minus 1/16 inch (1.6 mm), measured at jambs on a horizontal line parallel to plane of wall.
    c. Twist: Plus or minus 1/16 inch (1.6 mm), measured at opposite face corners of jambs on parallel lines, and perpendicular to plane of wall.
    d. Plumbness: Plus or minus 1/16 inch (1.6 mm), measured at jambs at floor.

C. Hollow-Metal Doors: Fit and adjust hollow-metal doors accurately in frames, within clearances specified below.

1. Non-Fire-Rated Steel Doors: Comply with SDI A250.8.
2. Fire-Rated Doors: Install doors with clearances according to NFPA 80.
3. Smoke-Control Doors: Install doors according to NFPA 105.

D. Glazing: Comply with installation requirements in Section 088000 "Glazing" and with hollow-metal manufacturer's written instructions.

3.3 CLEANING AND TOUCHUP

A. Prime-Coat Touchup: Immediately after erection, sand smooth rusted or damaged areas of prime coat and apply touchup of compatible air-drying, rust-inhibitive primer.

END OF SECTION 081113

SECTION 081416 - FLUSH WOOD DOORS

PART 1 - GENERAL

1.1 RELATED DOCUMENTS

A. Drawings and general provisions of the Contract, including General and Supplementary Conditions and Division 01 Specification Sections, apply to this Section.

1.2 SUMMARY

A. Section Includes:

1. Solid-core doors with wood-veneer faces.

B. Related Requirements:

1. Section 088000 "Glazing" for glass view panels in flush wood doors.

1.3 PREINSTALLATION MEETINGS

A. Preinstallation Conference: Conduct conference at Project site.

1.4 ACTION SUBMITTALS

A. Product Data: For each type of door. Include details of core and edge construction and trim for openings. Include factory-finishing specifications.

B. Shop Drawings: Indicate location, size, and hand of each door; elevation of each kind of door; construction details not covered in Product Data; and the following:

1. Dimensions and locations of blocking.
2. Dimensions and locations of mortises and holes for hardware.
3. Dimensions and locations of cutouts.
4. Undercuts.
5. Requirements for veneer matching.
6. Doors to be factory finished and finish requirements.
7. Fire-protection ratings for fire-rated doors.

C. Samples for Initial Selection: For factory-finished doors.

D. Samples for Verification:

1. Factory finishes applied to actual door face materials, approximately 8 by 10 inches (200 by 250 mm), for each material and finish**.** For each wood species and transparent finish, provide set of three Samples showing typical range of color and grain to be expected in finished Work.
2. Corner sections of doors, approximately 8 by 10 inches (200 by 250 mm), with door faces and edges representing actual materials to be used.

a. Provide Samples for each species of veneer and solid lumber required.
b. Provide Samples for each color, texture, and pattern of plastic laminate required.
c. Finish veneer-faced door Samples with same materials proposed for factory-finished doors.

3. Frames for light openings, 6 inches (150 mm) long, for each material, type, and finish required.

1.5 DELIVERY, STORAGE, AND HANDLING

A. Comply with requirements of referenced standard and manufacturer's written instructions.

B. Package doors individually in cardboard cartons and wrap bundles of doors in plastic sheeting.

C. Mark each door on top and bottom rail with opening number used on Shop Drawings.

1.6 FIELD CONDITIONS

A. Environmental Limitations: Do not deliver or install doors until spaces are enclosed and weathertight, wet work in spaces is complete and dry, and HVAC system is operating and maintaining ambient temperature and humidity conditions at occupancy levels during remainder of construction period.

B. Environmental Limitations: Do not deliver or install doors until spaces are enclosed and weathertight, wet work in spaces is complete and dry, and HVAC system is operating and maintaining temperature between 60 and 90 deg F (16 and 32 deg C) and relative humidity between 25 and 55 percent during remainder of construction period.

1.7 WARRANTY

A. A. Special Warranty: Manufacturer agrees to repair or replace doors that fail in materials or workmanship within specified warranty period.

1. Failures include, but are not limited to, the following:

a. Warping (bow, cup, or twist) more than 1/4 inch (6.4 mm) in a 42-by-84-inch (1067-by-2134-mm) section.
b. Telegraphing of core construction in face veneers exceeding 0.01 inch in a 3-inch (0.25 mm in a 76.2-mm) span.

2. Warranty shall also include installation and finishing that may be required due to repair or replacement of defective doors.
3. Warranty Period for Solid-Core Interior Doors: Life of installation.

PART 2 - PRODUCTS

2.1 MANUFACTURERS

A. Products: Subject to compliance with requirements, provide one of the following:

1. Eggers Industries; Premium Series.
2. Graham Wood Doors; ASSA ABLOY Group company; GPD Series.
3. Marshfield DoorSystems, Inc; Signature Series.

B. Source Limitations: Obtain flush wood doors from single manufacturer.

2.2 FLUSH WOOD DOORS, GENERAL

A. Quality Standard: In addition to requirements specified, comply with AWI's, AWMAC's, and WI's "Architectural Woodwork Standards WDMA I.S.1-A, "Architectural Wood Flush Doors."

1. Contract Documents contain selections chosen from options in quality standard and additional requirements beyond those of quality standard. Comply with those selections and requirements in addition to quality standard.

B. WDMA I.S.1-A Performance Grade: Extra Heavy Duty.

C. WDMA I.S.1-A Performance Grade:

1. Heavy Duty unless otherwise indicated.
2. Extra Heavy Duty: Classrooms, public toilets, janitor's closets, assembly spaces, and exits.
3. Standard Duty: Closets (not including janitor's closets).

D. Fire-Rated Wood Doors: Doors complying with NFPA 80 that are listed and labeled by a qualified testing agency, for fire-protection ratings indicated, based on testing at positive pressure according to NFPA 252 or UL 10C.

1. Oversize Fire-Rated Door Assemblies: For units exceeding sizes of tested assemblies, provide certification by a qualified testing agency that doors comply with standard construction requirements for tested and labeled fire-rated door assemblies except for size.
2. Temperature-Rise Limit: At vertical exit enclosures and exit passageways, provide doors that have a maximum transmitted temperature end point of not more than 450 deg F (250 deg C) above ambient after 30 minutes of standard fire-test exposure.
3. Cores: Provide core specified or mineral core as needed to provide fire-protection rating indicated.
4. Edge Construction: Provide edge construction with intumescent seals concealed by outer stile. Comply with specified requirements for exposed edges.
5. Pairs: Provide fire-retardant stiles that are listed and labeled for applications indicated without formed-steel edges and astragals. Provide stiles with concealed intumescent seals. Comply with specified requirements for exposed edges.
6. Pairs: Provide formed-steel edges and astragals with intumescent seals.

    a. Finish steel edges and astragals with baked enamel same color as doors.
    b. Finish steel edges and astragals to match door hardware (locksets or exit devices).

E. Smoke- and Draft-Control Door Assemblies: Listed and labeled for smoke and draft control, based on testing according to UL 1784.

F. Particleboard-Core Doors:

1. Particleboard: ANSI A208.1, Grade LD-2.
2. Blocking: Provide wood blocking in particleboard-core doors as needed to eliminate through-bolting hardware.
3. Provide doors with glued-wood-stave cores instead of particleboard cores for doors indicated to receive exit devices.

G. Mineral-Core Doors:

1. Core: Noncombustible mineral product complying with requirements of referenced quality standard and testing and inspecting agency for fire-protection rating indicated.
2. Blocking: Provide composite blocking with improved screw-holding capability approved for use in doors of fire-protection ratings indicated as needed to eliminate through-bolting hardware.
3. Edge Construction: At hinge stiles, provide laminated-edge construction with improved screw-holding capability and split resistance. Comply with specified requirements for exposed edges.

    a. Screw-Holding Capability: 550 lbf (2440 N) per WDMA T.M.-10.

2.3 VENEER-FACED DOORS FOR TRANSPARENT FINISH

A. Interior Solid-Core Doors (**SCWD**):

1. Grade: Premium, with Grade AA faces.
2. Species: Select white birch.
3. Cut: Plain sliced (flat sliced).
4. Match between Veneer Leaves: Book match.
5. Assembly of Veneer Leaves on Door Faces: Balance match.
6. Pair and Set Match: Provide for doors hung in same opening or separated only by mullions.
7. Room Match: Match door faces within each separate room or area of building. Corridor-door faces do not need to match where they are separated by 20 feet (6 m) or more.
8. Exposed Vertical Edges: Same species as faces or a compatible species - edge Type A.
9. Core: Particleboard

    a. Core in doors over 40% of face cut-out for lites or louvers: Engineered composite lumber.
    b. Core in doors with exit devices: Glued wood stave.
    c. Core in fire-rated doors, where required: Mineral-core.

10. Construction: Five plies. Stiles and rails are bonded to core, then entire unit is abrasive planed before veneering.

2.4 LIGHT FRAMES

A. Wood Beads for Light Openings in Wood Doors: Provide manufacturer's standard wood beads unless otherwise indicated.

1. Wood Species: Species compatible with door faces.
2. Profile: Manufacturer's standard shape.
3. At wood-core doors with 20-minute fire-protection ratings, provide wood beads and metal glazing clips approved for such use.

B. Wood-Veneered Beads for Light Openings in Fire-Rated Doors: Manufacturer's standard wood-veneered noncombustible beads matching veneer species of door faces and approved for use in doors of fire-protection rating indicated. Include concealed metal glazing clips where required for opening size and fire-protection rating indicated.

C. Metal Frames for Light Openings in Fire-Rated Doors: Manufacturer's standard frame formed of 0.048-inch- (1.2-mm-) thick, cold-rolled steel sheet; factory primed for paint finish; and approved for use in doors of fire-protection rating indicated.

2.5 FABRICATION

A. Factory fit doors to suit frame-opening sizes indicated. Comply with clearance requirements of referenced quality standard for fitting unless otherwise indicated.

1. Comply with NFPA 80 requirements for fire-rated doors.

B. Factory machine doors for hardware that is not surface applied. Locate hardware to comply with DHI-WDHS-3. Comply with final hardware schedules, door frame Shop Drawings, BHMA-156.115-W, and hardware templates.

1. Coordinate with hardware mortises in metal frames to verify dimensions and alignment before factory machining.
2. Metal Astragals: Factory machine astragals and formed-steel edges for hardware for pairs of fire-rated doors.

C. Transom and Side Panels: Fabricate matching panels with same construction, exposed surfaces, and finish as specified for associated doors. Finish bottom edges of transoms and top edges of rabbeted doors same as door stiles.

1. Fabricate door and transom panels with full-width, solid-lumber meeting rails. Provide factory-installed spring bolts for concealed attachment into jambs of metal door frames.

D. Openings: Factory cut and trim openings through doors.

1. Light Openings: Trim openings with moldings of material and profile indicated.
2. Glazing: Factory install glazing in doors indicated to be factory finished. Comply with applicable requirements in Section 088000 "Glazing."

2.6 FACTORY FINISHING

A. General: Comply with referenced quality standard for factory finishing. Complete fabrication, including fitting doors for openings and machining for hardware that is not surface applied, before finishing.

1. Finish faces, all four edges, edges of cutouts, and mortises. Stains and fillers may be omitted on bottom edges, edges of cutouts, and mortises.

B. Factory finish doors.

C. Factory finish doors that are indicated to receive transparent finish.

D. Factory finish doors where indicated in schedules or on Drawings as factory finished.

E. Transparent Finish:

1. Grade: Premium.
2. Finish: AWI's, AWMAC's, and WI's "Architectural Woodwork Standards" System 9, UV curable, acrylated epoxy, polyester, or urethane, or System 10, UV curable, water based.
3. Staining: Match Graham #625 Buff.
4. Effect: Semifilled finish, produced by applying an additional finish coat to partially fill the wood pores.
5. Sheen: Satin.

PART 3 - EXECUTION

3.1 EXAMINATION

A. Examine doors and installed door frames, with Installer present, before hanging doors.

1. Verify that installed frames comply with indicated requirements for type, size, location, and swing characteristics and have been installed with level heads and plumb jambs.
2. Reject doors with defects.

B. Proceed with installation only after unsatisfactory conditions have been corrected.

3.2 INSTALLATION

A. Hardware: For installation, see Section 087100 "Door Hardware."

B. Installation Instructions: Install doors to comply with manufacturer's written instructions and referenced quality standard, and as indicated.

1. Install fire-rated doors according to NFPA 80.
2. Install smoke- and draft-control doors according to NFPA 105.

C. Job-Fitted Doors: Align and fit doors in frames with uniform clearances and bevels as indicated below; do not trim stiles and rails in excess of limits set by manufacturer or permitted for fire-rated doors. Machine doors for hardware. Seal edges of doors, edges of cutouts, and mortises after fitting and machining.

1. Clearances: Provide 1/8 inch (3.2 mm) at heads, jambs, and between pairs of doors. Provide 1/8 inch (3.2 mm) from bottom of door to top of decorative floor finish or covering unless otherwise indicated. Where threshold is shown or scheduled, provide1/4 inch (6.4 mm) from bottom of door to top of threshold unless otherwise indicated.

a. Comply with NFPA 80 for fire-rated doors.
b. Bevel non-fire-rated doors 1/8 inch in 2 inches (3-1/2 degrees) at lock and hinge edges.

2. Bevel fire-rated doors 1/8 inch in 2 inches (3-1/2 degrees) at lock edge; trim stiles and rails only to extent permitted by labeling agency.

D. Factory-Fitted Doors: Align in frames for uniform clearance at each edge.

E. Factory-Finished Doors: Restore finish before installation if fitting or machining is required at Project site.

3.3 ADJUSTING

A. Operation: Rehang or replace doors that do not swing or operate freely.

B. Finished Doors: Replace doors that are damaged or that do not comply with requirements. Doors may be repaired or refinished if Work complies with requirements and shows no evidence of repair or refinishing.

END OF SECTION 081416

SECTION 081600 - COMPOSITE DOORS

PART 1 - GENERAL

1.1 SECTION INCLUDES

A. Fiberglass reinforced plastic (FRP) Doors

B. Aluminum (ALUM) Frames for FRP Doors

C. Fire-rated fiberglass reinforced plastic (FRP) Doors

D. Fire-rated fiberglass reinforced plastic (FRP) Frames

1.2 RELATED SECTIONS

A. Applicable provisions of Division 1 shall govern all work under this section.

B. Division 4 Section "Concrete Unit Masonry" for installing anchors and grouting frames in masonry construction.

C. Division 8 Section "Glazing" for glass in doors and frames.

1.3 QUALITY ASSURANCE

A. General: Provide fiberglass reinforced door and frame units made of components of standard construction furnished by one manufacturer as coordinated assemblies.

B. Manufacturer: Company specializing in the manufacture of fiberglass doors and frames with a minimum of five years documented experience.

C. Construction: Verify that FRP doors and frames are manufactured utilizing pultruded fiberglass components for flexibility, durability, superior strength and chemical resistance. Press-molded doors and frames will not be accepted. Resin rich door edges and gelcoat are prone to chipping and cracking (brittle).

D. Resins: Resins shall comply with USDA and FDA standards for incidental food contact.

E. Flame Spread Rating: Flame retardant structural shapes meet the minimum flame spread rating less than or equal to 25 when tested according to ASTM E84.

F. Fire-rated doors and frames to conform to NFPA 252, CAN4 S104, UL10C, and UL9.

G. Impact Strength: FRP doors and panels 10.32 foot-pounds per inch of notch, ASTM D-256.

H. Tensile Strength:

1. FRP doors and panels 12,000 psi, ASTM D-638.
2. FRP frames 30,000 psi, ASTM D-638.

I. Flexural Strength: FRP doors, panels, and frames 25,000 psi, ASTM D-790.

J. Compressive Strength:

1. FRP doors and panels 18,000 psi, ASTM D-695.

2. FRP frames 30,000 psi, ASTM D-695.

K. Water Absorption: FRP doors, panels, and frames .27 %, ASTM D-570.

L. Hardware Reinforcements: FRP doors and frames fabricated with a minimum screw holding strength of 1,000 lbs. Tested with a #12 x 1-1/4" hinge screw.

M. Paint Adhesion: Coating for FRP doors, panels, and frames to conform to AAMA 624-07 for color uniformity, film adhesion, specular gloss, direct impact, abrasion resistance, and chemical resistance.

N. Thermal Performance: U-0.50 maximum, 55 CRF minimum.

O. Warranty: Warranty fiberglass doors and frames for life of the initial installation against failure due to corrosion. Additionally, warranty fiberglass doors and frames for a period of 10 years against failure due to materials and workmanship, from date of substantial completion.

1.4 SUBMITTALS

A. Product Data: For each type of door and frame indicated, include door designation, type, level and model, material description, core description, construction details, and finishes.

1.5 DELIVERY, STORAGE, AND HANDLING

A. Deliver doors and frames cardboard-wrapped or crated to provide protection during transit and job storage. Provide additional protection to prevent damage to finish of factory-finished doors and frames.

B. Inspect doors and frames on delivery for damage, and notify shipper and supplier if damage exists. Minor damages may be repaired provided refinished items match new work and are acceptable to the Architect. Remove and replace damaged items that cannot be repaired as directed.

C. Store doors and frames at building site under cover. Avoid using non-vented plastic or canvas covers that could create a humidity chamber.

PART 2 - PRODUCTS

2.1 MANUFACTURERS

A. Basis-of-Design: Subject to compliance with requirements, provide **Special-Lite, Inc.; SL-17 FRP Door and SL-21 Flush Fire-Rated FRP Door** with acrylic modified polyester (AMP) face sheets, to match existing or an equivalent product by one of the following:

1. Ceco.
2. Cline Doors.
3. Curries.

2.2 DOORS

A. Exterior Doors: Provide doors with manufacturer’s standard solid, poured-in-place polyurethane foam core, stiffeners, blocking, trim for cutouts, and all other accessories required for proper, finished installation. Prepare door for hardware in the factory, and install hardware in factory to the greatest extent possible.

B. Exterior Fire-Rated Doors: Provide doors as indicated above, and provide all additional materials and accessories required for fire rating indicated.

2.3 FRAMES

A. Provide manufacturer's standard, thermally broken aluminum framing system suitable for door panel.

1. Color: As selected by Architect from manufacturer's full range.

B. Door Silencers: Except on weather-stripped frames, fabricate stops to receive three silencers on strike jambs of single-door frames and two silencers on heads of double-door frames.

C. Plaster Guards: Provide plaster guards or mortar boxes at back of hardware cutouts where mortar or other materials might obstruct hardware operation.

D. Fire-rated Frames: Provide manufacturer's standard fire-rated aluminum or fiberglass framing system, suitable for door panels.

2.4 FABRICATION

A. General: Fabricate fiberglass door and frame units to be rigid, neat in appearance, and free from defects including warp and buckle. Where practical, fit and assemble units in manufacturer's plant. Clearly identify work that cannot be permanently factory assembled before shipment, to assure proper assembly at Project site.

B. Core Construction: Manufacturer's standard core construction with poured-in-place polyurethane foam, or manufacturer's standard fire-rated core material.

C. Stiles and Rails: Fabricate doors utilizing heavy duty pultruded fiberglass tubular members.

D. Door Faces: Laminated composite faces shall be urethane fused to the stile and rail assembly, including the vertical stiffeners and core material, utilizing a two-part 100 percent reactive urethane adhesive, and then cured under pressure until completely bonded.

E. Clearances: Not more than 1/8 inch (3.2 mm) at jambs and heads, except not more than 1/4 inch (6.4 mm) between pairs of doors. Not more than 3/4 inch (19 mm) at bottom, with standard being 5/8 inch (15.9 mm) at bottom.

F. Door Edges: Lock stile to be factory beveled 1/8" in 2" for rub-free operation. Square lock-edge will not be accepted.

G. Tolerances: Maximum diagonal distortion - 1/16 inch (1.6 mm) measured with straight edge, corner-to-corner.

H. Hardware Reinforcement: Fabricate all hardware reinforcements utilizing premium high density polyethylene (HDPE) and fiberglass blocking. Any form of wood or metal reinforcements will not be accepted.

I. Exposed Fasteners: Unless otherwise indicated, provide stainless steel, countersunk flat or oval heads for exposed screws and bolts.

J. Thermal-Rated (insulating) Assemblies: At exterior locations provide doors fabricated as thermal-insulating door and frame assemblies, with U-factor of not more than 0.50.

K. Hardware Preparations: Prepare doors and frames to receive mortised and concealed hardware according to final door hardware schedule and templates provided by hardware supplier. Doors and frames must be factory pre-drilled for all mortised hardware preps. Pilot and through-bolt holes for all surface mounted hardware to be drilled at the project site during installation.

L. Frame Construction: Fabricate frames to size and shape shown on drawings.

1. Fabricate frames with mitered resin-welded corners and seamless face joints.

2. Provide set-up and resin welded frames with temporary spreader bars.

3. Provide 4 or 6 inch terminated/hospital stops - where indicated.

M. Hardware Locations: Locate hardware as indicated on shop drawings or if not indicated, according to manufacturer’s standard locations.

N. Glazing/Louver Stops: Manufacturer's standard two-piece aluminum or stainless steel retainers.

1. Provide non-removable stops on outside of exterior and on secure side of interior doors for glass, louver, and other panels in doors.

2. Provide screw-applied, removable, glazing stops on inside of glass, louvers, and other panels in doors.

3. Loose, eight piece trim kits will not be accepted. Additionally, retainers held in place by two-sided tape are not acceptable.

4. Glass to be supplied and installed under section 088000, unless stated otherwise.

O. Astragals: Fabricate astragals for pairs of doors utilizing fiberglass materials in either flat or "T" configuration - where indicated.

2.5 FINISHES

A. Prime Finish: Pre-clean and shop prime each door and frame ready for finish painting, performed at the jobsite under Section 09900.

1. Where indicated, furnish fiberglass doors and frames factory pre-finished.

a. Finish: Manufacturers standard chemical resistant two-part polyurethane topcoat.
b. Sheen: Satin or semi-gloss - as indicated.

B. Door Faces: Face skins shall be smooth. Due to the unit's extra-long life expectancy, minor repairs on facings must be easily blended in the event of damage. Slightly textured gelcoat facings will not be accepted.

C. Finish on fiberglass frames must match that of the fiberglass doors to which they are installed. Gelcoated doors and polyurethane coated frames together as a unit are not acceptable.

2.6 HARDWARE

A. Hardware: All hardware shall be furnished under section 087100, except as noted.

PART 3 - EXECUTION

3.1 INSTALLATION

A. General: Install fiberglass doors, frames, and accessories according to Shop Drawings, manufacturer's data, and as specified.

B. Placing Frames: Set frames accurately in position, plumbed, aligned, and braced securely until permanent anchors are set. After wall construction is completed, remove temporary braces and spreaders, leaving surfaces smooth and undamaged.

1. Except for frames located in existing walls or partitions, place frames before construction of enclosing walls and ceilings.
2. In masonry construction, provide at least three wall anchors per jamb; install adjacent to hinge locations on hinge jamb and at corresponding heights on strike jamb. Acceptable anchors include masonry wire anchors and masonry T-shaped anchors.
3. In existing concrete or masonry construction, provide at least three completed opening anchors per jamb; install adjacent to hinge location on hinge jamb and at corresponding heights on strike jamb. Set frames and secure to adjacent construction with stainless steel expansion bolts and masonry anchorage devices.
4. For openings 90 inches (2286 mm) or more in height, install an additional anchor at hinge and strike jambs.

C. Factory Finished Doors: Restore finish before installation if fitting or machining is required at Project site.

D. Door Installation: Fit fiberglass doors accurately in frames. Shim as necessary.

3.2 ADJUSTING AND CLEANING

A. Protection Removal: Immediately before final inspection, remove protective wrappings from doors and frames.

B. Cleaning: Clean fiberglass door and frame assemblies in accordance with manufacturer's recommended procedure.

END OF SECTION 081600

SECTION 083113 - ACCESS DOORS AND FRAMES

PART 1 - GENERAL

1.1 RELATED DOCUMENTS

A. Drawings and general provisions of the Contract, including General and Supplementary Conditions and Division 01 Specification Sections, apply to this Section.

1.2 SUMMARY

A. Section includes access doors and frames for walls and ceilings.

B. Related Requirements:

1. Section 077200 "Roof Accessories" for roof hatches.
2. Section 233300 "Air Duct Accessories" for heating and air-conditioning duct access doors.

1.3 ACTION SUBMITTALS

A. Product Data: For each type of product.

1. Include construction details, fire ratings, material descriptions, dimensions of individual components and profiles, and finishes.

B. Samples: For each type of access door and frame and for each finish specified, complete assembly minimum 6 by 6 inches (150 by 150 mm) in size.

C. Product Schedule: For access doors and frames.

PART 2 - PRODUCTS

2.1 PERFORMANCE REQUIREMENTS

A. Fire-Rated Access Doors and Frames: Assemblies complying with NFPA 80 that are listed and labeled by a qualified testing agency, for fire-protection and temperature-rise limit ratings indicated, according to NFPA 252 or UL 10B.

2.2 MANUFACTURERS

A. Manufacturers: Subject to compliance with requirements, provide products by one of the following:

1. Acudor Products, Inc.
2. JL Industries, Inc.; a division of the Activar Construction Products Group.
3. Karp Associates, Inc.
4. Larsens Manufacturing Company.
5. Milcor; Commercial Products Group of Hart & Cooley, Inc.

6. Nystrom, Inc.

B. Source Limitations: Obtain each type of access door and frame from a single source from a single manufacturer.

2.3 ACCESS DOORS AND FRAMES

A. Flush Access Doors with Exposed Flanges:

1. Description: Face of door flush with frame, with exposed flange and concealed hinge.
2. Locations: Wall and ceiling.
3. Door Size: 12 inches by 12 inches, minimum.
4. Uncoated Steel Sheet for Door: Nominal 0.060 inch (1.52 mm), 16 gage, factory primed.

    a. Locations: Interior non-rated masonry assemblies, unless otherwise indicated.

5. Metallic-Coated Steel Sheet for Door: Nominal 0.064 inch (1.63 mm), 16 gage, factory primed.

    a. Locations: Interior side of exterior masonry walls.

6. Stainless-Steel Sheet for Door: Nominal 0.062 inch (1.59 mm), 16 gage, No. 4 finish.

    a. Location: Non-rated masonry assemblies in wet locations, such as toilet rooms, kitchens, and other areas subject to high humidity.

7. Frame Material: Same material, thickness, and finish as door.
8. Latch and Lock: Latch bolt, key operated.

2.4 FIRE-RATED ACCESS DOORS AND FRAMES

A. Fire-Rated, Flush Access Doors with Exposed Flanges:

1. Description: Door face flush with frame, uninsulated; with exposed flange, self-closing door, and concealed hinge.
2. Locations: Wall and ceiling.
3. Door Size: 12 inches by 12 inches, minimum.
4. Fire-Resistance Rating: Not less than that of adjacent construction.
5. Temperature-Rise Rating: 250 deg F (139 deg C) at the end of 30 minutes.
6. Uncoated Steel Sheet for Door: Nominal 0.036 inch (0.91 mm), 20 gage, factory primed.
7. Metallic-Coated Steel Sheet for Door: Nominal 0.040 inch (1.02 mm), 20 gage, factory primed.
8. Stainless-Steel Sheet for Door: Nominal 0.038 inch (0.95 mm), 20 gage, No. 4 finish.
9. Frame Material: Same material, thickness, and finish as door.
10. Latch and Lock: Self-latching door hardware, operated by key.

2.5 MATERIALS

A. Steel Plates, Shapes, and Bars: ASTM A 36/A 36M.

B. Steel Sheet: Uncoated or electrolytic zinc coated, ASTM A 879/A 879M, with cold-rolled steel sheet substrate complying with ASTM A 1008/A 1008M, Commercial Steel (CS), exposed.

C. Metallic-Coated Steel Sheet: ASTM A 653/A 653M, Commercial Steel (CS), Type B; with minimum G60 (Z180) or A60 (ZF180) metallic coating.

D. Stainless-Steel Sheet, Strip, Plate, and Flat Bars: ASTM A 666, Type 304. Remove tool and die marks and stretch lines, or blend into finish.

E. Frame Anchors: Same material as door face.

F. Inserts, Bolts, and Anchor Fasteners: Hot-dip galvanized steel according to ASTM A 153/A 153M or ASTM F 2329.

2.6 FABRICATION

A. General: Provide access door and frame assemblies manufactured as integral units ready for installation.

B. Metal Surfaces: For metal surfaces exposed to view in the completed Work, provide materials with smooth, flat surfaces without blemishes. Do not use materials with exposed pitting, seam marks, roller marks, rolled trade names, or roughness.

C. Doors and Frames: Grind exposed welds smooth and flush with adjacent surfaces. Furnish mounting holes, attachment devices and fasteners of type required to secure access doors to types of supports indicated.

1. For concealed flanges with drywall bead, provide edge trim for gypsum panels securely attached to perimeter of frames.

D. Latch and Lock Hardware:

1. Quantity: Furnish number of latches and locks required to hold doors tightly closed.
2. Keys: Furnish two keys per lock and key all locks alike.

2.7 FINISHES

A. Comply with NAAMM's "Metal Finishes Manual for Architectural and Metal Products" for recommendations for applying and designating finishes.

B. Protect mechanical finishes on exposed surfaces from damage by applying a strippable, temporary protective covering before shipping.

C. Appearance of Finished Work: Noticeable variations in same piece are not acceptable. Variations in appearance of adjoining components are acceptable if they are within the range of approved Samples and are assembled or installed to minimize contrast.

D. Painted Finishes: Comply with coating manufacturer's written instructions for cleaning, conversion coating, and applying and baking finish.

1. Factory Primed: Apply manufacturer's standard, lead- and chromate-free, universal primer immediately after surface preparation and pretreatment.

E. Stainless-Steel Finishes:

1. Surface Preparation: Remove tool and die marks and stretch lines, or blend into finish.

2. Polished Finish: No. 4 finish. Grind and polish surfaces to produce uniform finish, free of cross scratches.

    a. Run grain of directional finishes with long dimension of each piece.
    b. When polishing is completed, passivate and rinse surfaces. Remove embedded foreign matter and leave surfaces chemically clean.

PART 3 - EXECUTION

3.1 EXAMINATION

A. Examine substrates for compliance with requirements for installation tolerances and other conditions affecting performance of the Work.

B. Proceed with installation only after unsatisfactory conditions have been corrected.

3.2 INSTALLATION

A. Comply with manufacturer's written instructions for installing access doors and frames.

3.3 ADJUSTING

A. Adjust doors and hardware, after installation, for proper operation.

3.4 ACCESS DOOR SCHEDULE

A. Materials:

1. Uncoated Steel:

    a. Locations: Typical use, unless otherwise indicated.

2. Metallic-Coated Steel:

    a. Locations: Interior side of exterior walls.

3. Stainless-Steel:

    a. Location: Wet locations, such as toilet rooms, kitchen areas, and other areas subject to high humidity.

B. Ratings: Provide fire-rated access doors for doors located in rated assemblies, as indicated on Drawings.

END OF SECTION 083113

SECTION 083313 - COILING COUNTER DOORS

PART 1 - GENERAL

1.1 RELATED DOCUMENTS

A. Drawings and general provisions of the Contract, including General and Supplementary Conditions and Division 01 Specification Sections, apply to this Section.

1.2 SUMMARY

A. Section Includes:

1. Counter doors.

B. Related Requirements:

1. Section 055000 "Metal Fabrications" for miscellaneous steel supports.

1.3 ACTION SUBMITTALS

A. Product Data: For each type and size of coiling counter door and accessory.

1. Include construction details, material descriptions, dimensions of individual components, profiles for slats, and finishes.
2. Include rated capacities, operating characteristics, electrical characteristics, and furnished accessories.
3. Include description of automatic closing device and testing and resetting instructions.

B. Shop Drawings: For each installation and for special components not dimensioned or detailed in manufacturer's product data.

1. Include plans, elevations, sections, and mounting details.
2. Include details of equipment assemblies, and indicate dimensions, required clearances, method of field assembly, components, and location and size of each field connection.
3. Include points of attachment and their corresponding static and dynamic loads imposed on structure.
4. Show locations of controls, locking devices, detectors or replaceable fusible links, and other accessories.

C. Samples for Verification: For each type of exposed finish, in manufacturer's standard sizes.

1.4 INFORMATIONAL SUBMITTALS

A. Qualification Data: For Installer.

1.5 CLOSEOUT SUBMITTALS

A. Maintenance Data: For coiling counter doors to include in maintenance manuals.

1.6 QUALITY ASSURANCE

A. Installer Qualifications: An entity that employs installers and supervisors who are trained and approved by manufacturer for both installation and maintenance of units required for this Project.

1. Maintenance Proximity: Not more than two hours normal travel time from Installer's place of business to Project site.

PART 2 - PRODUCTS

2.1 COUNTER DOOR ASSEMBLY (**CS-1**)

A. Basis-of-Design Product: Subject to compliance with requirements, provide McKeon Rolling Steel Door Company, Inc.; CS3000-PP-SS or a comparable product by one of the following:

1. Clopay Building Products.
2. Cookson Company.
3. Cornell Iron Works, Inc.
4. Lawrence Roll-Up Doors, Inc.

B. Operation Cycles: Door components and operators capable of operating for not less than 20,000. One operation cycle is complete when a door is opened from the closed position to the fully open position and returned to the closed position.

1. Include tamperproof cycle counter.

C. Door Curtain Material: Stainless steel.

D. Door Curtain Slats: Flat profile slats of 1-1/4-inch (32-mm) center-to-center height.

E. Bottom Bar: Manufacturer's standard continuous channel or tubular shape, fabricated stainless steel and finished to match slats.

F. Curtain Jamb Guides: Stainless steel with exposed finish matching curtain slats.

G. Hood: Match curtain material and finish.

1. Shape: Square.
2. Mounting: Face of wall.

H. Sill Configuration: Sill provided by Kitchen Equipment Contractor.

I. Locking Devices: Equip door with locking device assembly.

1. Locking Device Assembly: Cremone type, both jamb sides locking bars, operable from inside and outside with cylinders.

J. Manual Door Operator: Push-up operation.

K. Door Finish:

1. Stainless-Steel Finish: No. 4 (polished directional satin).
2. Interior Curtain-Slat Facing: Match finish of exterior curtain-slat face.

2.2 DOOR CURTAIN MATERIALS AND CONSTRUCTION

A. Door Curtains: Fabricate coiling counter-door curtain of interlocking metal slats in a continuous length for width of door without splices. Unless otherwise indicated, provide slats of thickness and mechanical properties recommended by door manufacturer for performance, size, and type of door indicated, and as follows:

1. Stainless-Steel Door Curtain Slats: ASTM A 666, Type 304; sheet thickness of 0.025 inch (0.64 mm); and as required.
2. Metal Interior Curtain-Slat Facing: Match metal of exterior curtain-slat face.

B. Curtain Jamb Guides: Manufacturer's standard angles or channels and angles of same material and finish as curtain slats unless otherwise indicated, with sufficient depth and strength to retain curtain, to allow curtain to operate smoothly, and to withstand loading. Slot bolt holes for guide adjustment. Provide removable stops on guides to prevent overtravel of curtain.

2.3 HOODS

A. General: Form sheet metal hood to entirely enclose coiled curtain and operating mechanism at opening head. Contour to fit end brackets to which hood is attached. Roll and reinforce top and bottom edges for stiffness. Form closed ends for surface-mounted hoods and fascia for any portion of between-jamb mounting that projects beyond wall face. Equip hood with intermediate support brackets as required to prevent sagging.

1. Stainless Steel: Type 304, complying with ASTM A 666.

2.4 LOCKING DEVICES

A. Locking Device Assembly: Fabricate with cylinder lock, spring-loaded dead bolt, operating handle, cam plate, and adjustable locking bars to engage through slots in tracks.

1. Lock Cylinders: Cylinders specified in Section 087100 "Door Hardware".

2.5 CURTAIN ACCESSORIES

A. Push/Pull Handles: Equip each push-up-operated or emergency-operated door with lifting handles on each side of door, finished to match door.

B. Pull-Down: Provide one of the following for doors with heads over 84 inches above adjacent finished floor:

1. Pole Hooks: Provide pole hooks and poles for doors more than 84 inches (2130 mm) high.

2.6 COUNTERBALANCING MECHANISM

A. General: Counterbalance doors by means of manufacturer's standard mechanism with an adjustable-tension, steel helical torsion spring mounted around a steel shaft and contained in a spring barrel connected to top of curtain with barrel rings. Use grease-sealed bearings or self-lubricating graphite bearings for rotating members.

B. Counterbalance Barrel: Fabricate spring barrel of manufacturer's standard hot-formed, structural-quality, seamless or welded carbon-steel pipe, of sufficient diameter and wall thickness to support rolled-up curtain without distortion of slats and to limit barrel deflection to not more than 0.03 in./ft. (2.5 mm/m) of span under full load.

C. Counterbalance Spring: One or more oil-tempered, heat-treated steel helical torsion springs. Size springs to counterbalance weight of curtain, with uniform adjustment accessible from outside barrel. Secure ends of springs to barrel and shaft with cast-steel barrel plugs.

D. Torsion Rod for Counterbalance Shaft: Fabricate of manufacturer's standard cold-rolled steel, sized to hold fixed spring ends and carry torsional load.

E. Brackets: Manufacturer's standard mounting brackets of either cast iron or cold-rolled steel plate.

2.7 MANUAL DOOR OPERATORS

A. General: Equip door with manual door operator by door manufacturer.

B. Push-up Door Operation: Design counterbalance mechanism so that required lift or pull for door operation does not exceed 25 lbf (111 N).

2.8 GENERAL FINISH REQUIREMENTS

A. Comply with NAAMM/NOMMA's "Metal Finishes Manual for Architectural and Metal Products (AMP 500-06)" for recommendations for applying and designating finishes.

B. Appearance of Finished Work: Noticeable variations in same piece are not acceptable. Variations in appearance of adjoining components are acceptable if they are within the range of approved Samples and are assembled or installed to minimize contrast.

2.9 STAINLESS-STEEL FINISHES

A. Surface Preparation: Remove tool and die marks and stretch lines, or blend into finish.

B. Polished Finishes: Grind and polish surfaces to produce uniform finish, free of cross scratches.

1. Run grain of directional finishes with long dimension of each piece.
2. When polishing is completed, passivate and rinse surfaces. Remove embedded foreign matter and leave surfaces chemically clean.
3. Directional Satin Finish: No. 4.

PART 3 - EXECUTION

3.1 EXAMINATION

A. Examine substrates areas and conditions, with Installer present, for compliance with requirements for substrate construction and other conditions affecting performance of the Work.

B. Examine locations of electrical connections.

C. Proceed with installation only after unsatisfactory conditions have been corrected.

3.2 INSTALLATION

A. Install coiling counter doors and operating equipment complete with necessary hardware, anchors, inserts, hangers, and equipment supports; according to manufacturer's written instructions and as specified.

B. Install coiling counter doors, hoods, controls, and operators at the mounting locations indicated for each door.

3.3 STARTUP SERVICE

A. Engage a factory-authorized service representative to perform startup service.

1. Perform installation and startup checks according to manufacturer's written instructions.
2. Test and adjust controls and safety devices. Replace damaged and malfunctioning controls and equipment.

3.4 ADJUSTING

A. Adjust hardware and moving parts to function smoothly so that doors operate easily, free of warp, twist, or distortion.

B. Lubricate bearings and sliding parts as recommended by manufacturer.

3.5 MAINTENANCE SERVICE

A. Initial Maintenance Service: Beginning at Substantial Completion, maintenance service shall include 12 months full maintenance by skilled employees of coiling-door Installer. Include quarterly preventive maintenance, repair or replacement of worn or defective components, lubrication, cleaning, and adjusting as required for door operation. Parts and supplies shall be manufacturer's authorized replacement parts and supplies.

1. Perform maintenance, including emergency callback service, during normal working hours.
2. Include 24-hour-per-day, seven-day-per-week, emergency callback service.

3.6 DEMONSTRATION

A. Engage a factory-authorized service representative to train Owner's maintenance personnel to adjust, operate, and maintain coiling counter doors.

END OF SECTION 083313

SECTION 083323 - OVERHEAD COILING DOORS

PART 1 - GENERAL

1.1 RELATED DOCUMENTS

A. Drawings and general provisions of the Contract, including General and Supplementary Conditions and Division 01 Specification Sections, apply to this Section.

1.2 SUMMARY

A. Section Includes:

1. Service doors.

B. Related Requirements:

1. Section 055000 "Metal Fabrications" for miscellaneous steel supports, door-opening framing, corner guards, and bollards.

1.3 ACTION SUBMITTALS

A. Product Data: For each type and size of overhead coiling door and accessory.

1. Include construction details, material descriptions, dimensions of individual components, profiles for slats, and finishes.
2. Include rated capacities, operating characteristics, electrical characteristics, and furnished accessories.
3. Include description of automatic-closing device and testing and resetting instructions.

B. Shop Drawings: For each installation and for special components not dimensioned or detailed in manufacturer's product data.

1. Include plans, elevations, sections, and mounting details.
2. Include details of equipment assemblies, and indicate dimensions, required clearances, method of field assembly, components, and location and size of each field connection.
3. Include points of attachment and their corresponding static and dynamic loads imposed on structure.
4. For exterior components, include details of provisions for assembly expansion and contraction and for excluding and draining moisture to the exterior.
5. Show locations of controls, locking devices, and other accessories.
6. Include diagrams for power, signal, and control wiring.

C. Samples for Verification: For each type of exposed finish on the following components, in manufacturer's standard sizes:

1. Curtain slats.
2. Bottom bar with sensor edge.
3. Guides.
4. Brackets.

5. Hood.
6. Locking device(s).
7. Include similar Samples of accessories involving color selection.

1.4 INFORMATIONAL SUBMITTALS

A. Qualification Data: For Installer.

B. Sample Warranty: For special warranty.

1.5 CLOSEOUT SUBMITTALS

A. Maintenance Data: For overhead coiling doors to include in maintenance manuals.

1.6 QUALITY ASSURANCE

A. Installer Qualifications: An entity that employs installers and supervisors who are trained and approved by manufacturer for both installation and maintenance of units required for this Project.

1. Maintenance Proximity: Not more than two hours' normal travel time from Installer's place of business to Project site.

B. Accessibility Standard: Comply with applicable provisions in the USDOJ's "2010 ADA Standards for Accessible Design" the ABA standards of the Federal agency having jurisdiction and ICC A117.1.

1.7 WARRANTY

A. Special Warranty: Manufacturer agrees to repair or replace components of doors that fail in materials or workmanship within specified warranty period.

1. Warranty Period: Two years from date of Substantial Completion.

PART 2 - PRODUCTS

2.1 MANUFACTURERS

A. Source Limitations: Obtain overhead coiling doors from single source from single manufacturer.

1. Obtain operators and controls from overhead coiling-door manufacturer.

2.2 DOOR ASSEMBLY (**CD-1**)

A. Service Door: Overhead coiling door formed with curtain of interlocking metal slats.

1. Basis-of-Design Product: Subject to compliance with requirements, provide McKeon Rolling Steel Door Company, Inc; SD3020-M-PC or a comparable product by one of the following:

a. Cookson Company.

b. Cornell Iron Works, Inc.
c. Lawrence Roll-Up Doors, Inc.
d. Overhead Door Corporation.

B. Operation Cycles: Door components and operators capable of operating for not less than 20,000. One operation cycle is complete when a door is opened from the closed position to the fully open position and returned to the closed position.

1. Include tamperproof cycle counter.

C. Door Curtain Material: Galvanized steel.

D. Door Curtain Slats: Flat profile slats of 3-inch (76-mm) center-to-center height.
1. Gasket Seal. Manufacturer's standard continuous gaskets between slats.

E. Bottom Bar: Two angles, each not less than 2 by 2 by 1/8 inch (51 by 51 by 3 mm) thick; fabricated from galvanized steel and finished to match door.

F. Curtain Jamb Guides: Galvanized steel with exposed finish matching curtain slats.

G. Hood: Match curtain material and finish.

1. Shape: Square.
2. Mounting: Face of wall.

H. Electric Door Operator:

1. Usage Classification: Light duty, up to 10 cycles per hour.
2. Operator Location: Top of hood.
3. Safety: Listed according to UL 325 by a qualified testing agency for commercial or industrial use; moving parts of operator enclosed or guarded if exposed and mounted at 8 feet (2.44 m) or lower.
4. Motor Exposure: Exterior, wet, and humid.
5. Motor Electrical Characteristics:

a. Horsepower: 1/2 hp. minimum, as recommended in writing by manufacturer door size.
b. Voltage: 115-V ac, single phase, 60 Hz.

6. Emergency Manual Operation: Crank type.
7. Obstruction-Detection Device: Automatic photoelectric sensor.
8. Control Station(s): Where indicated on Drawings.

I. Curtain Accessories: Equip door with smoke seals.

J. Door Finish:

1. Baked-Enamel or Powder-Coated Finish: Color as selected by Architect from full range of RAL colors.
2. Interior Curtain-Slat Facing: Match finish of exterior curtain-slat face.

2.3 MATERIALS, GENERAL

A. Electrical Components, Devices, and Accessories: Listed and labeled as defined in NFPA 70, by a qualified testing agency, and marked for intended location and application.

2.4 DOOR CURTAIN MATERIALS AND CONSTRUCTION

A. Door Curtains: Fabricate overhead coiling-door curtain of interlocking metal slats, designed to withstand wind loading indicated, in a continuous length for width of door without splices. Unless otherwise indicated, provide slats of thickness and mechanical properties recommended by door manufacturer for performance, size, and type of door indicated, and as follows:

1. Steel Door Curtain Slats: Zinc-coated (galvanized), cold-rolled structural-steel sheet; complying with ASTM A 653/A 653M, with G90 (Z275) zinc coating; nominal sheet thickness (coated) of 0.028 inch (0.71 mm); and as required.

B. Curtain Jamb Guides: Manufacturer's standard angles or channels and angles of same material and finish as curtain slats unless otherwise indicated, with sufficient depth and strength to retain curtain, to allow curtain to operate smoothly, and to withstand loading. Slot bolt holes for guide adjustment. Provide removable stops on guides to prevent overtravel of curtain.

2.5 HOODS

A. General: Form sheet metal hood to entirely enclose coiled curtain and operating mechanism at opening head. Contour to fit end brackets to which hood is attached. Roll and reinforce top and bottom edges for stiffness. Form closed ends for surface-mounted hoods and fascia for any portion of between-jamb mounting that projects beyond wall face. Equip hood with intermediate support brackets as required to prevent sagging.

1. Galvanized Steel: Nominal 0.028-inch- (0.71-mm-) thick, hot-dip galvanized-steel sheet with G90 (Z275) zinc coating, complying with ASTM A 653/A 653M.

B. Removable Metal Soffit: Formed or extruded from same metal and with same finish as curtain if hood is mounted above ceiling unless otherwise indicated.

2.6 CURTAIN ACCESSORIES

A. Smoke Seals: Equip each fire-rated door with replaceable smoke-seal perimeter gaskets or brushes for smoke and draft control as required for door listing and labeling by a qualified testing agency.

B. Astragal for Interior Doors: Equip each door bottom bar with a replaceable, adjustable, continuous, compressible gasket of flexible vinyl, rubber, or neoprene as a cushion bumper.

C. Automatic-Closing Device: Equip each fire-rated door with an automatic-closing device or holder-release mechanism and governor unit complying with NFPA 80 and an easily tested and reset release mechanism. Release mechanism for motor-operated doors shall allow testing without mechanical release of the door. Automatic-closing device shall be designed for activation by the following:

1. Building fire-detection, smoke-detection, and -alarm systems.

2.7 COUNTERBALANCE MECHANISM

A. General: Counterbalance doors by means of manufacturer's standard mechanism with an adjustable-tension, steel helical torsion spring mounted around a steel shaft and contained in a spring barrel connected to top of curtain with barrel rings. Use grease-sealed bearings or self-lubricating graphite bearings for rotating members.

B. Counterbalance Barrel: Fabricate spring barrel of manufacturer's standard hot-formed, structural-quality, seamless carbon-steel pipe, of sufficient diameter and wall thickness to support rolled-up curtain without distortion of slats and to limit barrel deflection to not more than 0.03 in./ft. (2.5 mm/m) of span under full load.

C. Counterbalance Spring: One or more oil-tempered, heat-treated steel helical torsion springs. Size springs to counterbalance weight of curtain, with uniform adjustment accessible from outside barrel. Secure ends of springs to barrel and shaft with cast-steel barrel plugs.

1. Fire-Rated Doors: Equip with auxiliary counterbalance spring and prevent tension release from main counterbalance spring when automatic-closing device operates.

D. Torsion Rod for Counterbalance Shaft: Fabricate of manufacturer's standard cold-rolled steel, sized to hold fixed spring ends and carry torsional load.

E. Brackets: Manufacturer's standard mounting brackets of either cast iron or cold-rolled steel plate.

2.8 ELECTRIC DOOR OPERATORS

A. General: Electric door operator assembly of size and capacity recommended and provided by door manufacturer for door and operation-cycles requirement specified, with electric motor and factory-prewired motor controls, starter, gear-reduction unit, solenoid-operated brake, clutch, control stations, control devices, integral gearing for locking door, and accessories required for proper operation.

1. Comply with NFPA 70.
2. Control equipment complying with NEMA ICS 1, NEMA ICS 2, and NEMA ICS 6, with NFPA 70 Class 2 control circuit, maximum 24-V ac or dc.

B. Usage Classification: Electric operator and components capable of operating for not less than number of cycles per hour indicated for each door.

C. Door Operator Location(s): Operator location indicated for each door.

1. Top-of-Hood Mounted: Operator is mounted to the right or left door head plate with the operator on top of the door-hood assembly and connected to the door drive shaft with drive chain and sprockets. Headroom is required for this type of mounting.
2. Front-of-Hood Mounted: Operator is mounted to the right or left door head plate with the operator on coil side of the door-hood assembly and connected to the door drive shaft with drive chain and sprockets. Front clearance is required for this type of mounting.
3. Wall Mounted: Operator is mounted to the inside front wall on the left or right side of door and connected to door drive shaft with drive chain and sprockets. Side room is required for this type of mounting. Wall-mounted operator can also be mounted above or below shaft; if above shaft, headroom is required.
4. Bench Mounted: Operator is mounted to the right or left door head plate and connected to the door drive shaft with drive chain and sprockets. Side room is required for this type of mounting.
5. Through-Wall Mounted: Operator is mounted on other side of wall from coil side of door.

D. Motors: Reversible-type motor with controller (disconnect switch) for motor exposure indicated for each door assembly.

1. Electrical Characteristics: Minimum as indicated for each door assembly. If not indicated, large enough to start, accelerate, and operate door in either direction from any position, at a speed not less than 8 in./sec. (203 mm/s) and not more than 12 in./sec. (305 mm/s), without exceeding nameplate ratings or service factor.

2. Operating Controls, Controllers, Disconnect Switches, Wiring Devices, and Wiring: Manufacturer's standard unless otherwise indicated.
3. Coordinate wiring requirements and electrical characteristics of motors and other electrical devices with building electrical system and each location where installed.

E. Limit Switches: Equip each motorized door with adjustable switches interlocked with motor controls and set to automatically stop door at fully opened and fully closed positions.

F. Obstruction-Detection Devices: External entrapment protection consisting of indicated automatic safety sensor capable of protecting full width of door opening. For non-fire-rated doors, activation of device immediately stops and reverses downward door travel.

1. Photoelectric Sensor: Manufacturer's standard system designed to detect an obstruction in door opening without contact between door and obstruction.

a. Self-Monitoring Type: Designed to interface with door operator control circuit to detect damage to or disconnection of sensing device. When self-monitoring feature is activated, door closes only with sustained or constant pressure on close button.

G. Control Station: Three-button control station in fixed location with momentary-contact push-button controls labeled "Open" and "Stop" and sustained- or constant-pressure push-button control labeled "Close."

1. Full-guarded, standard-duty, surface-mounted, weatherproof type, NEMA ICS 6, Type 4 enclosure, key operated.

H. Emergency Manual Operation: Equip each electrically powered door with capability for emergency manual operation. Design manual mechanism so required force for door operation does not exceed 25 lbf (111 N).

I. Emergency Operation Disconnect Device: Equip operator with hand-operated disconnect mechanism for automatically engaging manual operator and releasing brake for emergency manual operation while disconnecting motor without affecting timing of limit switch. Mount mechanism so it is accessible from floor level. Include interlock device to automatically prevent motor from operating when emergency operator is engaged.

J. Motor Removal: Design operator so motor may be removed without disturbing limit-switch adjustment and without affecting emergency manual operation.

K. Audible and Visual Signals: Audible alarm and visual indicator lights in compliance with the accessibility standard.

2.9 GENERAL FINISH REQUIREMENTS

A. Comply with NAAMM/NOMMA 500 for recommendations for applying and designating finishes.

B. Appearance of Finished Work: Noticeable variations in same piece are not acceptable. Variations in appearance of adjoining components are acceptable if they are within the range of approved Samples and are assembled or installed to minimize contrast.

2.10 STEEL AND GALVANIZED-STEEL FINISHES

A. Baked-Enamel or Powder-Coat Finish: Manufacturer's standard baked-on finish consisting of prime coat and thermosetting topcoat. Comply with coating manufacturer's written instructions for cleaning, pretreatment, application, and minimum dry film thickness.

PART 3 - EXECUTION

3.1 EXAMINATION

A. Examine substrates areas and conditions, with Installer present, for compliance with requirements for substrate construction and other conditions affecting performance of the Work.

B. Examine locations of electrical connections.

C. Proceed with installation only after unsatisfactory conditions have been corrected.

3.2 INSTALLATION

A. Install overhead coiling doors and operating equipment complete with necessary hardware, anchors, inserts, hangers, and equipment supports; according to manufacturer's written instructions and as specified.

B. Install overhead coiling doors, hoods, controls, and operators at the mounting locations indicated for each door.

C. Accessibility: Install overhead coiling doors, switches, and controls along accessible routes in compliance with the accessibility standard.

D. Power-Operated Doors: Install according to UL 325.

3.3 STARTUP SERVICE

A. Engage a factory-authorized service representative to perform startup service.

1. Complete installation and startup checks according to manufacturer's written instructions.
2. Test and adjust controls and safety devices. Replace damaged and malfunctioning controls and equipment.
3. Test door closing when activated by detector or alarm-connected automatic-closing system. Reset door-closing mechanism after successful test.

3.4 ADJUSTING

A. Adjust hardware and moving parts to function smoothly so that doors operate easily, free of warp, twist, or distortion.

1. Adjust exterior doors and components to be weather resistant.

B. Lubricate bearings and sliding parts as recommended by manufacturer.

C. Adjust seals to provide tight fit around entire perimeter.

3.5 MAINTENANCE SERVICE

A. Initial Maintenance Service: Beginning at Substantial Completion, maintenance service shall include 12 months' full maintenance by skilled employees of coiling-door Installer. Include quarterly preventive maintenance, repair or replacement of worn or defective components, lubrication, cleaning, and adjusting as required for proper door operation. Parts and supplies shall be manufacturer's authorized replacement parts and supplies.

1. Perform maintenance, including emergency callback service, during normal working hours.
2. Include 24-hour-per-day, seven-day-per-week, emergency callback service.

3.6 DEMONSTRATION

A. Engage a factory-authorized service representative to train Owner's maintenance personnel to adjust, operate, and maintain overhead coiling doors.

END OF SECTION 083323

SECTION 084113 - ALUMINUM-FRAMED ENTRANCES AND STOREFRONTS

PART 1 - GENERAL

1.1 RELATED DOCUMENTS

A. Drawings and general provisions of the Contract, including General and Supplementary Conditions and Division 01 Specification Sections, apply to this Section.

1.2 SUMMARY

A. Section Includes:

1. Storefront framing.
2. Manual-swing entrance doors.

B. Related Requirements:

1. Section 079200 "Joint Sealants."
2. Section 081416 "Flush Wood Doors" for wood doors installed in aluminum framing systems.
3. Section 084113.13 "Fire-Rated Aluminum-Framed Entrances and Storefronts" for rated storefronts and entrance systems.
4. Section 088000 "Glazing."

1.3 PREINSTALLATION MEETINGS

A. Preinstallation Conference: Conduct conference at Project site.

1.4 ACTION SUBMITTALS

A. Product Data: For each type of product.

1. Include construction details, material descriptions, dimensions of individual components and profiles, and finishes.

B. Shop Drawings: For aluminum-framed entrances and storefronts. Include plans, elevations, sections, full-size details, and attachments to other work.

1. Include details of provisions for assembly expansion and contraction and for draining moisture occurring within the assembly to the exterior.
2. Include full-size isometric details of each type of vertical-to-horizontal intersection of aluminum-framed entrances and storefronts, showing the following:

a. Joinery, including concealed welds.
b. Anchorage.
c. Expansion provisions.
d. Glazing.
e. Flashing and drainage.

3. Show connection to and continuity with adjacent thermal, weather, air, and vapor barriers.
4. Include point-to-point wiring diagrams showing the following:

    a. Power requirements for each electrically operated door hardware.
    b. Location and types of switches, signal device, conduit sizes, and number and size of wires.

C. Samples for Initial Selection: For units with factory-applied color finishes.

D. Samples for Verification: For each type of exposed finish required, in manufacturer's standard sizes.

E. Fabrication Sample: Of each vertical-to-horizontal intersection of assemblies, made from 12-inch (300-mm) lengths of full-size components and showing details of the following:

1. Joinery, including concealed welds.
2. Anchorage.
3. Expansion provisions.
4. Glazing.
5. Flashing and drainage.

F. Entrance Door Hardware Schedule: Prepared by or under supervision of supplier, detailing fabrication and assembly of entrance door hardware, as well as procedures and diagrams. Coordinate final entrance door hardware schedule with doors, frames, and related work to ensure proper size, thickness, hand, function, and finish of entrance door hardware.

G. Delegated-Design Submittal: For aluminum-framed entrances and storefronts indicated to comply with performance requirements and design criteria, including analysis data signed and sealed by the qualified professional engineer responsible for their preparation.

1.5 INFORMATIONAL SUBMITTALS

A. Qualification Data: For Installer and field testing agency.

B. Energy Performance Certificates: For aluminum-framed entrances and storefronts, accessories, and components, from manufacturer.

1. Basis for Certification: NFRC-certified energy performance values for each aluminum-framed entrance and storefront.

C. Product Test Reports: For aluminum-framed entrances and storefronts, for tests performed by a qualified testing agency.

D. Quality-Control Program: Developed specifically for Project, including fabrication and installation, according to recommendations in ASTM C 1401. Include periodic quality-control reports.

E. Source quality-control reports.

F. Field quality-control reports.

1.6 CLOSEOUT SUBMITTALS

A. Maintenance Data: For aluminum-framed entrances and storefronts to include in maintenance manuals.

B. Maintenance Data for Structural Sealant: For structural-sealant-glazed storefront to include in maintenance manuals. Include ASTM C 1401 recommendations for post-installation-phase quality-control program.

1.7 QUALITY ASSURANCE

A. Installer Qualifications: An entity that employs installers and supervisors who are trained and approved by manufacturer.

B. Testing Agency Qualifications: Qualified according to ASTM E 699 for testing indicated and accredited by the International Accreditation Service or the International Laboratory Accreditation Cooperation Mutual Recognition Arrangement as complying with ISO/IEC 17025.

C. Product Options: Information on Drawings and in Specifications establishes requirements for aesthetic effects and performance characteristics of assemblies. Aesthetic effects are indicated by dimensions, arrangements, alignment, and profiles of components and assemblies as they relate to sightlines, to one another, and to adjoining construction.

1. Do not change intended aesthetic effects, as judged solely by Architect, except with Architect's approval. If changes are proposed, submit comprehensive explanatory data to Architect for review.

1.8 WARRANTY

A. Special Warranty: Manufacturer agrees to repair or replace components of aluminum-framed entrances and storefronts that do not comply with requirements or that fail in materials or workmanship within specified warranty period.

1. Failures include, but are not limited to, the following:

a. Structural failures, including, but not limited to, excessive deflection.
b. Noise or vibration created by wind and thermal and structural movements.
c. Deterioration of metals and other materials beyond normal weathering.
d. Water penetration through fixed glazing and framing areas.
e. Failure of operating components.

2. Warranty Period: Five years from date of Substantial Completion.

B. Special Finish Warranty: Standard form in which manufacturer agrees to repair finishes or replace aluminum that shows evidence of deterioration of factory-applied finishes within specified warranty period.

1. Deterioration includes, but is not limited to, the following:

a. Color fading more than 5 Hunter units when tested according to ASTM D 2244.
b. Chalking in excess of a No. 8 rating when tested according to ASTM D 4214.
c. Cracking, checking, peeling, or failure of paint to adhere to bare metal.

2. Warranty Period: 20 years from date of Substantial Completion.

PART 2 - PRODUCTS

2.1 MANUFACTURERS

A. Source Limitations: Obtain all components of aluminum-framed entrance and storefront system, including framing and accessories, from single manufacturer.

2.2 PERFORMANCE REQUIREMENTS

A. Delegated Design: Engage a qualified professional engineer, as defined in Section 014000 "Quality Requirements," to design aluminum-framed entrances and storefronts.

B. General Performance: Comply with performance requirements specified, as determined by testing of aluminum-framed entrances and storefronts representing those indicated for this Project without failure due to defective manufacture, fabrication, installation, or other defects in construction.

1. Aluminum-framed entrances and storefronts shall withstand movements of supporting structure, including, but not limited to, twist, column shortening, long-term creep, and deflection from uniformly distributed and concentrated live loads.
2. Failure also includes the following:

a. Thermal stresses transferring to building structure.
b. Glass breakage.
c. Noise or vibration created by wind and thermal and structural movements.
d. Loosening or weakening of fasteners, attachments, and other components.
e. Failure of operating units.

C. Structural Loads:

1. Wind Loads: As indicated on Drawings.
2. Other Design Loads: As indicated on Drawings.

D. Deflection of Framing Members: At design wind pressure, as follows:

1. Deflection Normal to Wall Plane: Limited to edge of glass in a direction perpendicular to glass plane not exceeding 1/175 of the glass edge length for each individual glazing lite or an amount that restricts edge deflection of individual glazing lites to 3/4 inch (19.1 mm), whichever is less.
2. Deflection Parallel to Glazing Plane: Limited to 1/360 of clear span or 1/8 inch (3.2 mm), whichever is smaller.

a. Operable Units: Provide a minimum 1/16-inch (1.6-mm) clearance between framing members and operable units.

E. Structural: Test according to ASTM E 330 as follows:

1. When tested at positive and negative wind-load design pressures, assemblies do not evidence deflection exceeding specified limits.
2. When tested at 150 percent of positive and negative wind-load design pressures, assemblies, including anchorage, do not evidence material failures, structural distress, or permanent deformation of main framing members exceeding 0.2 percent of span.
3. Test Durations: As required by design wind velocity, but not less than 10 seconds.

F. Air Infiltration: Test according to ASTM E 283 for infiltration as follows:

1. Fixed Framing and Glass Area:

   a. Maximum air leakage of 0.06 cfm/sq. ft. (0.30 L/s per sq. m) at a static-air-pressure differential of 6.24 lbf/sq. ft. (300 Pa).

2. Entrance Doors:

   a. Pair of Doors: Maximum air leakage of 1.0 cfm/sq. ft. (5.08 L/s per sq. m) at a static-air-pressure differential of 1.57 lbf/sq. ft. (75 Pa).
   b. Single Doors: Maximum air leakage of 0.5 cfm/sq. ft. (2.54 L/s per sq. m) at a static-air-pressure differential of 1.57 lbf/sq. ft. (75 Pa).

G. Water Penetration under Static Pressure: Test according to ASTM E 331 as follows:

1. No evidence of water penetration through fixed glazing and framing areas when tested according to a minimum static-air-pressure differential of 20 percent of positive wind-load design pressure, but not less than 10 lbf/sq. ft. (480 Pa).

H. Energy Performance: Certify and label energy performance according to NFRC as follows:

1. Thermal Transmittance (U-factor): Glazing and framing areas shall have U-factor of not more than values noted below, as determined according to NFRC 100.

   a. Fixed framing: 0.34 Btu/sq. ft. x h x deg F.
   b. Entrance doors: 0.52 Btu/sq. ft. x h x deg F.

2. Solar Heat Gain Coefficient: Fixed glazing and framing areas shall have a solar heat gain coefficient of no greater than 0.36 as determined according to NFRC 200.
3. Condensation Resistance: Fixed glazing and framing areas shall have an NFRC-certified condensation resistance rating of no less than 65 as determined according to NFRC 500.

I. Noise Reduction: Test according to ASTM E 90, with ratings determined by ASTM E 1332, as follows.

1. Outdoor-Indoor Transmission Class: Minimum 26.

J. Thermal Movements: Allow for thermal movements resulting from ambient and surface temperature changes:

1. Temperature Change: 120 deg F (67 deg C), ambient; 180 deg F (100 deg C), material surfaces.

2.3 STOREFRONT SYSTEMS

A. Basis-of-Design Product: Subject to compliance with requirements, provide YKK AP America Inc.; YES 45 XT at exterior and YES 45 FS at interior or a comparable product by one of the following:

1. EFCO Corporation; Series 403X, Series 401(NT), D502, and D518.
2. Kawneer North America; an Alcoa company; Trifab 451UT, VersaGlaze 450, AA425, and 500.
3. Oldcastle Building Envelope.

B. Framing Members: Manufacturer's extruded- or formed-aluminum framing members of thickness required and reinforced as required to support imposed loads.

1. Exterior Framing Construction: Dual thermal barriers.
2. Interior Vestibule Framing Construction: Nonthermal.

3. Glazing System: Retained mechanically with gaskets on four sides.
4. Glazing Plane: Center.
5. Finish: High-performance organic finish.
6. Fabrication Method: Field-fabricated stick system.
7. Aluminum: Alloy and temper recommended by manufacturer for type of use and finish indicated.
8. Steel Reinforcement: As required by manufacturer.

C. Backer Plates: Manufacturer's standard, continuous backer plates for framing members, if not integral, where framing abuts adjacent construction.

D. Brackets and Reinforcements: Manufacturer's standard high-strength aluminum with nonstaining, nonferrous shims for aligning system components.

2.4 ENTRANCE DOOR SYSTEMS

A. Basis-of-Design Product: Subject to compliance with requirements, provide YKK AP America Inc.; MegaTherm 50XT at exterior and 50D at interior or a comparable product by one of the following:

1. EFCO Corporation; D502, and D518.
2. Kawneer North America; an Alcoa company; AA425, and 500.
3. Oldcastle Building Envelope.

B. Entrance Doors: Manufacturer's standard glazed entrance doors for manual-swing or automatic operation.

1. Door Construction: 2- to 2-1/4-inch (50.8- to 57.2-mm) overall thickness, with minimum 0.125-inch- (3.2-mm-) thick, extruded-aluminum tubular rail and stile members. Mechanically fasten corners with reinforcing brackets that are deeply penetrated and fillet welded or that incorporate concealed tie rods.

   a. Thermal Construction: High-performance plastic connectors separate aluminum members exposed to the exterior from members exposed to the interior.

2. Door Design: Wide stile; 5-inch (127-mm) nominal width.
3. Glazing Stops and Gaskets: Square, snap-on, extruded-aluminum stops and preformed gaskets.

   a. Provide nonremovable glazing stops on outside of door.

2.5 ENTRANCE DOOR HARDWARE

A. Entrance Door Hardware: Hardware not specified in this Section is specified in Section 087100 "Door Hardware."

B. General: Provide entrance door hardware and entrance door hardware sets indicated in door and frame schedule for each entrance door, to comply with requirements in this Section.

1. Entrance Door Hardware Sets: Provide quantity, item, size, finish or color indicated, and named manufacturers' products.
2. Sequence of Operation: Provide electrified door hardware function, sequence of operation, and interface with other building control systems indicated.
3. Opening-Force Requirements:

a. Egress Doors: Not more than 15 lbf (67 N) to release the latch and not more than 30 lbf (133 N) to set the door in motion and not more than 15 lbf (67 N) to open the door to its minimum required width.
b. Accessible Interior Doors: Not more than 5 lbf (22.2 N) to fully open door.

2.6 GLAZING

A. Glazing: Comply with Section 088000 "Glazing."

B. Glazing Gaskets: Manufacturer's standard sealed-corner pressure-glazing system of black, resilient elastomeric glazing gaskets, setting blocks, and shims or spacers.

C. Glazing Sealants: Comply with Section 088000 "Glazing."

2.7 MATERIALS

A. Sheet and Plate: ASTM B 209 (ASTM B 209M).

B. Extruded Bars, Rods, Profiles, and Tubes: ASTM B 221 (ASTM B 221M).

C. Extruded Structural Pipe and Tubes: ASTM B 429/B 429M.

D. Structural Profiles: ASTM B 308/B 308M.

E. Steel Reinforcement:

1. Structural Shapes, Plates, and Bars: ASTM A 36/A 36M.
2. Cold-Rolled Sheet and Strip: ASTM A 1008/A 1008M.
3. Hot-Rolled Sheet and Strip: ASTM A 1011/A 1011M.
4. Primer: Manufacturer's standard zinc-rich, corrosion-resistant primer complying with SSPC-PS Guide No. 12.00; applied immediately after surface preparation and pretreatment. Select surface preparation methods according to recommendations in SSPC-SP COM, and prepare surfaces according to applicable SSPC standard.

2.8 ACCESSORIES

A. Automatic Door Operators: Section 087100 " Door Hardware."

B. Fasteners and Accessories: Manufacturer's standard corrosion-resistant, nonstaining, nonbleeding fasteners and accessories compatible with adjacent materials.

1. Use self-locking devices where fasteners are subject to loosening or turning out from thermal and structural movements, wind loads, or vibration.
2. Reinforce members as required to receive fastener threads.
3. Use exposed fasteners with countersunk Phillips screw heads, finished to match framing system.

C. Anchors: Three-way adjustable anchors with minimum adjustment of 1 inch (25.4 mm) that accommodate fabrication and installation tolerances in material and finish compatible with adjoining materials and recommended by manufacturer.

1. Concrete and Masonry Inserts: Hot-dip galvanized cast-iron, malleable-iron, or steel inserts complying with ASTM A 123/A 123M or ASTM A 153/A 153M requirements.

D. Concealed Flashing: Dead-soft, 0.018-inch- (0.457-mm-) thick stainless steel, complying with ASTM A 240/A 240M, of type recommended by manufacturer.

E. Bituminous Paint: Cold-applied asphalt-mastic paint containing no asbestos, formulated for 30-mil (0.762-mm) thickness per coat.

F. Rigid PVC Filler.

2.9 FABRICATION

A. Form or extrude aluminum shapes before finishing.

B. Weld in concealed locations to greatest extent possible to minimize distortion or discoloration of finish. Remove weld spatter and welding oxides from exposed surfaces by descaling or grinding.

C. Fabricate components that, when assembled, have the following characteristics:

1. Profiles that are sharp, straight, and free of defects or deformations.
2. Accurately fitted joints with ends coped or mitered.
3. Physical and thermal isolation of glazing from framing members.
4. Accommodations for thermal and mechanical movements of glazing and framing to maintain required glazing edge clearances.
5. Provisions for field replacement of glazing from exterior.
6. Fasteners, anchors, and connection devices that are concealed from view to greatest extent possible.

D. Mechanically Glazed Framing Members: Fabricate for flush glazing without projecting stops.

E. Storefront Framing: Fabricate components for assembly using screw-spline system.

F. Entrance Door Frames: Reinforce as required to support loads imposed by door operation and for installing entrance door hardware.

1. At interior and exterior doors, provide compression weather stripping at fixed stops.

G. Entrance Doors: Reinforce doors as required for installing entrance door hardware.

1. At pairs of exterior doors, provide sliding-type weather stripping retained in adjustable strip and mortised into door edge.
2. At exterior doors, provide weather sweeps applied to door bottoms.

H. Entrance Door Hardware Installation: Factory install entrance door hardware to the greatest extent possible. Cut, drill, and tap for factory-installed entrance door hardware before applying finishes.

I. After fabrication, clearly mark components to identify their locations in Project according to Shop Drawings.

2.10 ALUMINUM FINISHES

A. High-Performance Organic Finish: Two-coat fluoropolymer finish complying with AAMA 2605 and containing not less than 70 percent PVDF or FEVE resin by weight in color coat. Prepare, pretreat, and apply coating to exposed metal surfaces to comply with coating and resin manufacturers' written instructions.

1. Color and Gloss: Match YKK Colonial White.

PART 3 - EXECUTION

3.1 EXAMINATION

A. Examine areas, with Installer present, for compliance with requirements for installation tolerances and other conditions affecting performance of the Work.

B. Proceed with installation only after unsatisfactory conditions have been corrected.

3.2 PREPARATION

A. Prepare surfaces that are in contact with structural sealant according to sealant manufacturer's written instructions, to ensure compatibility and adhesion. Preparation includes, but is not limited to, cleaning and priming surfaces.

3.3 INSTALLATION

A. General:

1. Comply with manufacturer's written instructions.
2. Do not install damaged components.
3. Fit joints to produce hairline joints free of burrs and distortion.
4. Rigidly secure nonmovement joints.
5. Install anchors with separators and isolators to prevent metal corrosion and electrolytic deterioration and to prevent impeding movement of moving joints.
6. Seal perimeter and other joints watertight unless otherwise indicated.

B. Metal Protection:

1. Where aluminum is in contact with dissimilar metals, protect against galvanic action by painting contact surfaces with materials recommended by manufacturer for this purpose or by installing nonconductive spacers.
2. Where aluminum is in contact with concrete or masonry, protect against corrosion by painting contact surfaces with bituminous paint.

C. Set continuous sill members and flashing in full sealant bed, as specified in Section 079200 "Joint Sealants," to produce weathertight installation.

D. Install components plumb and true in alignment with established lines and grades.

E. Install operable units level and plumb, securely anchored, and without distortion. Adjust weather-stripping contact and hardware movement to produce proper operation.

F. Install glazing as specified in Section 088000 "Glazing."

G. Install weatherseal sealant according to Section 079200 "Joint Sealants" and according to sealant manufacturer's written instructions to produce weatherproof joints. Install joint filler behind sealant as recommended by sealant manufacturer.

H. Entrance Doors: Install doors to produce smooth operation and tight fit at contact points.

1. Exterior Doors: Install to produce weathertight enclosure and tight fit at weather stripping.
2. Field-Installed Entrance Door Hardware: Install surface-mounted entrance door hardware according to entrance door hardware manufacturers' written instructions using concealed fasteners to greatest extent possible.

3.4 ERECTION TOLERANCES

A. Erection Tolerances: Install aluminum-framed entrances and storefronts to comply with the following maximum tolerances:

1. Plumb: 1/8 inch in 10 feet (3.2 mm in 3 m); 1/4 inch in 40 feet (6.35 mm in 12.2 m).
2. Level: 1/8 inch in 20 feet (3.2 mm in 6 m); 1/4 inch in 40 feet (6.35 mm in 12.2 m).
3. Alignment:

   a. Where surfaces abut in line or are separated by reveal or protruding element up to 1/2 inch (12.7 mm) wide, limit offset from true alignment to 1/16 inch (1.6 mm).
   b. Where surfaces are separated by reveal or protruding element from 1/2 to 1 inch (12.7 to 25.4 mm) wide, limit offset from true alignment to 1/8 inch (3.2 mm).
   c. Where surfaces are separated by reveal or protruding element of 1 inch (25.4 mm) wide or more, limit offset from true alignment to 1/4 inch (6 mm).

4. Location: Limit variation from plane to 1/8 inch in 12 feet (3.2 mm in 3.6 m); 1/2 inch (12.7 mm) over total length.

3.5 FIELD QUALITY CONTROL

A. Testing Agency: Engage a qualified testing agency to perform tests and inspections.

B. Field Quality-Control Testing: Perform the following test on representative areas of aluminum-framed entrances and storefronts.

1. Water-Spray Test: Before installation of interior finishes has begun, areas designated by Architect shall be tested according to AAMA 501.2 and shall not evidence water penetration.

   a. Perform a minimum of two tests in areas as directed by Architect.
   b. Perform tests in each test area as directed by Architect. Perform at least three tests, prior to 10 and 50 percent completion.

2. Air Infiltration: ASTM E 783 at 1.5 times the rate specified for laboratory testing in "Performance Requirements" Article but not more than 0.09 cfm/sq. ft. (0.45 L/s per sq. m) at a static-air-pressure differential of 1.57 lbf/sq. ft. (75 Pa).

   a. Perform a minimum of two tests in areas as directed by Architect.
   b. Perform tests in each test area as directed by Architect. Perform at least three tests, prior to 10 and 50 percent completion.

3. Water Penetration: ASTM E 1105 at a minimum uniform and cyclic static-air-pressure differential of 0.67 times the static-air-pressure differential specified for laboratory testing in "Performance Requirements" Article, but not less than 6.24 lbf/sq. ft. (300 Pa), and shall not evidence water penetration.
4. Repair installation areas damaged by testing.

C. Aluminum-framed entrances and storefronts will be considered defective if they do not pass tests and inspections.

D. Prepare test and inspection reports.

3.6 MAINTENANCE SERVICE

A. Entrance Door Hardware:

1. Maintenance Tools and Instructions: Furnish a complete set of specialized tools and maintenance instructions as needed for Owner's continued adjustment, maintenance, and removal and replacement of entrance door hardware.

END OF SECTION 084113

SECTION 085113 - ALUMINUM WINDOWS

PART 1 - GENERAL

1.1 RELATED DOCUMENTS

A. Drawings and general provisions of the Contract, including General and Supplementary Conditions and Division 01 Specification Sections, apply to this Section.

1.2 SUMMARY

A. Section includes aluminum windows for exterior locations.

B. Related Requirements:

1. Section 084113 "Aluminum-Framed Entrances and Storefronts" for coordinating finish among aluminum fenestration units.

1.3 PREINSTALLATION MEETINGS

A. Preinstallation Conference: Conduct conference at Project site.

1. Review and finalize construction schedule and verify availability of materials, Installer's personnel, equipment, and facilities needed to make progress and avoid delays.
2. Review and discuss the finishing of aluminum windows that is required to be coordinated with the finishing of other aluminum work for color and finish matching.
3. Review, discuss, and coordinate the interrelationship of aluminum windows with other exterior wall components. Include provisions for anchoring, flashing, weeping, sealing perimeters, and protecting finishes.
4. Review and discuss the sequence of work required to construct a watertight and weathertight exterior building envelope.
5. Inspect and discuss the condition of substrate and other preparatory work performed by other trades.

1.4 ACTION SUBMITTALS

A. Product Data: For each type of product.

1. Include construction details, material descriptions, glazing and fabrication methods, dimensions of individual components and profiles, hardware, and finishes for aluminum windows.

B. Shop Drawings: For aluminum windows.

1. Include plans, elevations, sections, hardware, accessories, insect screens, operational clearances, and details of installation, including anchor, flashing, and sealant installation.

C. Samples for Initial Selection: For units with factory-applied finishes.

1. Include Samples of hardware and accessories involving color selection.

D. Samples for Verification: For aluminum windows and components required, showing full range of color variations for finishes, and prepared on Samples of size indicated below:

1. Exposed Finishes: 2 by 4 inches (50 by 100 mm).
2. Exposed Hardware: Full-size units.

E. Product Schedule: For aluminum windows. Use same designations indicated on Drawings.

1.5 INFORMATIONAL SUBMITTALS

A. Qualification Data: For manufacturer and Installer.

B. Product Test Reports: For each type of aluminum window, for tests performed by a qualified testing agency.

C. Field quality-control reports.

1.6 QUALITY ASSURANCE

A. Manufacturer Qualifications: A manufacturer capable of fabricating aluminum windows that meet or exceed performance requirements indicated and of documenting this performance by test reports and calculations.

B. Installer Qualifications: An installer acceptable to aluminum window manufacturer for installation of units required for this Project.

C. Mockups: Build mockups to verify selections made under Sample submittals, to demonstrate aesthetic effects, and to set quality standards for materials and execution.

1. Build mockup of typical wall area as shown on Drawings.
2. Approval of mockups does not constitute approval of deviations from the Contract Documents contained in mockups unless Architect specifically approves such deviations in writing.
3. Subject to compliance with requirements, approved mockups may become part of the completed Work if undisturbed at time of Substantial Completion.

1.7 WARRANTY

A. Manufacturer's Warranty: Manufacturer agrees to repair or replace aluminum windows that fail in materials or workmanship within specified warranty period.

1. Failures include, but are not limited to, the following:

a. Failure to meet performance requirements.
b. Structural failures including excessive deflection, water leakage, condensation, and air infiltration.
c. Faulty operation of movable sash and hardware.
d. Deterioration of materials and finishes beyond normal weathering.
e. Failure of insulating glass.

2. Warranty Period:

a. Window: 10 years from date of Substantial Completion.

b. Glazing Units: 10 years from date of Substantial Completion.
c. Aluminum Finish: 20 years from date of Substantial Completion.

PART 2 - PRODUCTS

2.1 MANUFACTURERS

A. Source Limitations: Obtain aluminum windows from single source from single manufacturer.

2.2 WINDOW PERFORMANCE REQUIREMENTS

A. Product Standard: Comply with AAMA/WDMA/CSA 101/I.S.2/A440 for definitions and minimum standards of performance, materials, components, accessories, and fabrication unless more stringent requirements are indicated.

1. Window Certification: AAMA certified with label attached to each window.

B. Performance Class and Grade: AAMA/WDMA/CSA 101/I.S.2/A440 as follows:

1. Minimum Performance Class: AW.
2. Minimum Performance Grade: 50.

C. Thermal Transmittance: NFRC 100 maximum whole-window U-factor:

1. Fixed Windows: 0.35 Btu/sq. ft. x h x deg F (2.0 W/sq. m x K).
2. Operable Windows: 0.45 Btu/sq. ft. x h x deg F (2.57 W/sq. m x K)

D. Solar Heat-Gain Coefficient (SHGC): NFRC 200 maximum whole-window SHGC of 0.40.

E. Condensation-Resistance Factor (CRF): Provide aluminum windows tested for thermal performance according to AAMA 1503, showing a CRF of 52.

F. Thermal Movements: Provide aluminum windows, including anchorage, that allow for thermal movements resulting from the following maximum change (range) in ambient and surface temperatures by preventing buckling, opening of joints, overstressing of components, failure of joint sealants, failure of connections, and other detrimental effects. Base engineering calculation on surface temperatures of materials due to both solar heat gain and nighttime-sky heat loss.

1. Temperature Change: 120 deg F (67 deg C) ambient; 180 deg F (100 deg C) material surfaces.

G. Outside-Inside Transmission Class (OITC): Rated for not less than 26 OITC when tested for laboratory sound transmission loss according to ASTM E 90 and determined by ASTM E 1332.

2.3 ALUMINUM WINDOWS

A. Basis-of-Design Product: Subject to compliance with requirements, provide Kawneer North America, an Arconic company; AA 6400 Thermal Windows or a comparable product by one of the following:

1. EFCO Corporation.
2. YKK AP America Inc.

B. Operating Types: Provide the following operating types in locations indicated on Drawings:

1. Awning: Project out.
2. Fixed.

C. Frames and Sashes: Aluminum extrusions complying with AAMA/WDMA/CSA 101/I.S.2/A440.

1. Thermally Improved Construction: Fabricate frames, sashes, and muntins with an integral, concealed, low-conductance thermal barrier located between exterior materials and window members exposed on interior side in a manner that eliminates direct metal-to-metal contact.

D. Insulating-Glass Units: ASTM E 2190.

1. Glass: ASTM C 1036, Type 1, Class 1, q3.

   a. Tint: Clear.
   b. Kind: Fully tempered where indicated on Drawings.

2. Lites: Two.
3. Filling: Fill space between glass lites with argon.
4. Low-E Coating: Sputtered on second surface.

E. Hardware, General: Provide manufacturer's standard hardware fabricated from aluminum, stainless steel, carbon steel complying with AAMA 907, or other corrosion-resistant material compatible with adjacent materials; designed to smoothly operate, tightly close, and securely lock windows, and sized to accommodate sash weight and dimensions.

1. Exposed Hardware Color and Finish: As selected by Architect from manufacturer's full range.

F. Projected Window Hardware:

1. Gear-Type Rotary Operators: Complying with AAMA 901 when tested according to ASTM E 405, Method A. Provide operators that function without requiring the removal of interior screens or using screen wickets.

   a. Type and Style: As selected by Architect from manufacturer's full range of types and styles.

2. Hinges: Non-friction type, not less than two per sash.
3. Lock: Lever handle and cam-action lock with keeper.
4. Limit Devices: Concealed support arms with adjustable, limited, hold-open limit devices designed to restrict sash opening.

   a. Limit clear opening to 4 inches (100 mm) for ventilation; with custodial key release.

G. Weather Stripping: Provide full-perimeter weather stripping for each operable sash unless otherwise indicated.

H. Fasteners: Noncorrosive and compatible with window members, trim, hardware, anchors, and other components.

1. Exposed Fasteners: Do not use exposed fasteners to greatest extent possible. For application of hardware, use fasteners that match finish hardware being fastened.

2.4 ACCESSORIES

A. Integral Ventilating System/Device: Where indicated, provide weather-stripped, adjustable, horizontal fresh-air vent, with a free airflow slot, full width of window sash by approximately [**1 inch (25 mm)**] [**3 inches (75 mm)**] when open, complying with AAMA/WDMA/CSA 101/I.S.2/A440. Equip vent bar with an integral insect screen, removable for cleaning.

B. Dividers (False Muntins): Provide extruded-aluminum divider grilles in designs indicated for each sash lite.

1. Type: Permanently located at exterior lite.
2. Pattern: As indicated on Drawings.
3. Profile: As selected by Architect from manufacturer's full range.

C. Subsills: Thermally broken, extruded-aluminum subsills in configurations indicated on Drawings.

D. Column Covers: Extruded-aluminum profiles in sizes and configurations indicated on Drawings.

E. Interior Trim: Extruded-aluminum profiles in sizes and configurations indicated on Drawings.

F. Panning Trim: Extruded-aluminum profiles in sizes and configurations indicated on Drawings.

G. Receptor System: Two-piece, snap-together, thermally broken, extruded-aluminum receptor system that anchors windows in place.

2.5 INSECT SCREENS

A. General: Fabricate insect screens to integrate with window frame. Provide screen for each operable exterior sash. Screen wickets are not permitted.

1. Type and Location:

a. Full, inside for project-out.

B. Aluminum Frames: Manufacturer's standard aluminum alloy complying with SMA 1004 or SMA 1201. Fabricate frames with mitered or coped joints or corner extrusions, concealed fasteners, and removable PVC spline/anchor concealing edge of frame.

1. Tubular Framing Sections and Cross Braces: Roll formed from aluminum sheet.

C. Aluminum Wire Fabric: 18-by-16 (1.1-by-1.3-mm) mesh of 0.011-inch- (0.28-mm-) diameter, coated aluminum wire.

1. Wire-Fabric Finish: Black.

2.6 FABRICATION

A. Fabricate aluminum windows in sizes indicated. Include a complete system for assembling components and anchoring windows.

B. Glaze aluminum windows in the factory.

C. Weather strip each operable sash to provide weathertight installation.

D. Weep Holes: Provide weep holes and internal passages to conduct infiltrating water to exterior.

E. Provide water-shed members above side-hinged sashes and similar lines of natural water penetration.

F. Mullions: Provide mullions and cover plates, matching window units, complete with anchors for support to structure and installation of window units. Allow for erection tolerances and provide for movement of window units due to thermal expansion and building deflections. Provide mullions and cover plates capable of withstanding design wind loads of window units.

G. Complete fabrication, assembly, finishing, hardware application, and other work in the factory to greatest extent possible. Disassemble components only as necessary for shipment and installation.

2.7 GENERAL FINISH REQUIREMENTS

A. Comply with NAAMM's "Metal Finishes Manual" for recommendations for applying and designating finishes.

B. Protect mechanical finishes on exposed surfaces from damage by applying a strippable, temporary protective covering before shipping.

C. Appearance of Finished Work: Noticeable variations in same piece are not acceptable. Variations in appearance of adjoining components are acceptable if they are within the range of approved Samples and are assembled or installed to minimize contrast.

2.8 ALUMINUM FINISHES

A. Finish designations prefixed by AA comply with the system established by the Aluminum Association for designating aluminum finishes.

B. High-Performance Organic Finish (Two-Coat Fluoropolymer): AA-C12C40R1x (Chemical Finish: cleaned with inhibited chemicals; Chemical Finish: conversion coating; Organic Coating: manufacturer's standard two-coat, thermocured system consisting of specially formulated inhibitive primer and fluoropolymer color topcoat containing not less than 70 percent polyvinylidene fluoride resin by weight). Prepare, pretreat, and apply coating to exposed metal surfaces to comply with AAMA 2605 and with coating and resin manufacturers' written instructions.

1. Color and Gloss: Match YKK Colonial White.

PART 3 - EXECUTION

3.1 EXAMINATION

A. Examine openings, substrates, structural support, anchorage, and conditions, with Installer present, for compliance with requirements for installation tolerances and other conditions affecting performance of the Work.

B. Verify rough opening dimensions, levelness of sill plate, and operational clearances.

C. Examine wall flashings, vapor retarders, water and weather barriers, and other built-in components to ensure weathertight window installation.

D. Proceed with installation only after unsatisfactory conditions have been corrected.

3.2 INSTALLATION

A. Comply with manufacturer's written instructions for installing windows, hardware, accessories, and other components. For installation procedures and requirements not addressed in manufacturer's written instructions, comply with installation requirements in ASTM E 2112.

B. Install windows level, plumb, square, true to line, without distortion or impeding thermal movement, anchored securely in place to structural support, and in proper relation to wall flashing and other adjacent construction to produce weathertight construction.

C. Install windows and components to drain condensation, water penetrating joints, and moisture migrating within windows to the exterior.

D. Separate aluminum and other corrodible surfaces from sources of corrosion or electrolytic action at points of contact with other materials.

3.3 FIELD QUALITY CONTROL

A. Testing Agency: Engage a qualified testing agency to perform tests and inspections.

1. Testing and inspecting agency will interpret tests and state in each report whether tested work complies with or deviates from requirements.

B. Testing Services: Testing and inspecting of installed windows shall take place as follows:

1. Testing Methodology: Testing of windows for air infiltration and water resistance shall be performed according to AAMA 502.
2. Air-Infiltration Testing:

    a. Test Pressure: That required to determine compliance with AAMA/WDMA/CSA 101/I.S.2/A440 performance class indicated.
    b. Allowable Air-Leakage Rate: 1.5 times the applicable AAMA/WDMA/CSA 101/I.S.2/A440 rate for product type and performance class rounded down to one decimal place.

3. Water-Resistance Testing:

    a. Test Pressure: Two-thirds times test pressure required to determine compliance with AAMA/WDMA/CSA 101/I.S.2/A440 performance grade indicated.
    b. Allowable Water Infiltration: No water penetration.

4. Testing Extent: Three windows of each type as selected by Architect and a qualified independent testing and inspecting agency. Windows shall be tested after perimeter sealants have cured.
5. Test Reports: Prepared according to AAMA 502.

C. Windows will be considered defective if they do not pass tests and inspections.

D. Prepare test and inspection reports.

3.4 ADJUSTING, CLEANING, AND PROTECTION

A. Adjust operating sashes and hardware for a tight fit at contact points and weather stripping for smooth operation and weathertight closure.

B. Clean exposed surfaces immediately after installing windows. Avoid damaging protective coatings and finishes. Remove excess sealants, glazing materials, dirt, and other substances.

1. Keep protective films and coverings in place until final cleaning.

C. Remove and replace glass that has been broken, chipped, cracked, abraded, or damaged during construction period.

D. Protect window surfaces from contact with contaminating substances resulting from construction operations. If contaminating substances do contact window surfaces, remove contaminants immediately according to manufacturer's written instructions.

END OF SECTION 085113

SECTION 087100 – DOOR HARDWARE

PART 1 - GENERAL

1.1 RELATED DOCUMENTS

A. Drawings and general provisions of the Contract, including General and Supplementary Conditions and Division 1 Specification Sections, apply to this Section.

1.2 SUMMARY

A. This Section includes commercial door hardware for the following:

1. Swinging doors.
2. Other doors to the extent indicated.

B. Door hardware includes, but is not necessarily limited to, the following:

1. Mechanical door hardware.
2. Electromechanical door hardware.
3. Automatic operators.
4. Cylinders specified for doors in other sections.

C. Related Sections:

1. Section 061053 “Miscellaneous Rough Carpentry”.
2. Section 080671 “Door Hardware Schedule”.
3. Section 081113 “Hollow Metal Doors and Frames”.
4. Section 081416 “Flush Wood Doors”.
5. Section 084113 “Aluminum Framed Entrances and Storefronts”.
6. Section 281000 “Intrusion Detection Systems.”
7. Section 281100 “Access Control Systems.”

D. Codes and References: Comply with the version year adopted by the Authority Having Jurisdiction.

1. ANSI A117.1 - Accessible and Usable Buildings and Facilities.
2. ICC/IBC - International Building Code.
3. NFPA 70 - National Electrical Code.
4. NFPA 80 - Fire Doors and Windows.
5. NFPA 101 - Life Safety Code.
6. NFPA 105 - Installation of Smoke Door Assemblies.
7. UL/ULC and CSA C22.2 – Standards for Automatic Door Operators Used on Fire and Smoke Barrier Doors and Systems of Doors.
8. State Building Codes, Local Amendments.

E. Standards: All hardware specified herein shall comply with the following industry standards:

1. ANSI/BHMA Certified Product Standards - A156 Series
2. UL10C – Positive Pressure Fire Tests of Door Assemblies

1.3 SUBMITTALS

A. Product Data: Manufacturer's product data sheets including installation details, material descriptions, dimensions of individual components and profiles, operational descriptions and finishes.

B. Door Hardware Schedule: Prepared by or under the supervision of supplier, detailing fabrication and assembly of door hardware, as well as procedures and diagrams. Coordinate the final Door Hardware Schedule with doors, frames, and related work to ensure proper size, thickness, hand, function, and finish of door hardware.

1. Format: Comply with scheduling sequence and vertical format in DHI's "Sequence and Format for the Hardware Schedule."

2. Organization: Organize the Door Hardware Schedule into door hardware sets indicating complete designations of every item required for each door or opening. Organize door hardware sets in same order as in the Door Hardware Sets at the end of Part 3. Submittals that do not follow the same format and order as the Door Hardware Sets will be rejected and subject to resubmission.

3. Content: Include the following information:

a. Type, style, function, size, label, hand, and finish of each door hardware item.
b. Manufacturer of each item.
c. Fastenings and other pertinent information.
d. Location of door hardware set, cross-referenced to Drawings, both on floor plans and in door and frame schedule.
e. Explanation of abbreviations, symbols, and codes contained in schedule.
f. Mounting locations for door hardware.
g. Door and frame sizes and materials.
h. Warranty information for each product.

4. Submittal Sequence: Submit the final Door Hardware Schedule at earliest possible date, particularly where approval of the Door Hardware Schedule must precede fabrication of other work that is critical in the Project construction schedule. Include Product Data, Samples, Shop Drawings of other work affected by door hardware, and other information essential to the coordinated review of the Door Hardware Schedule.

C. Shop Drawings: Details of electrified access control hardware indicating the following:

1. Wiring Diagrams: Upon receipt of approved schedules, submit detailed system wiring diagrams for power, signaling, monitoring, communication, and control of the access control system electrified hardware. Differentiate between manufacturer-installed and field-installed wiring. Include the following:

a. Elevation diagram of each unique access controlled opening showing location and interconnection of major system components with respect to their placement in the respective door openings.
b. Complete (risers, point-to-point) access control system block wiring diagrams.
c. Wiring instructions for each electronic component scheduled herein.

2. Electrical Coordination: Coordinate with related sections the voltages and wiring details required at electrically controlled and operated hardware openings.

D. Keying Schedule: After a keying meeting with the owner has taken place prepare a separate keying schedule detailing final instructions. Submit the keying schedule in electronic format. Include keying system explanation, door numbers, key set symbols, hardware set numbers and special instructions. Owner must approve submitted keying schedule prior to the ordering of permanent cylinders/cores.

E. Informational Submittals:

1. Product Test Reports: Indicating compliance with cycle testing requirements, based on evaluation of comprehensive tests performed by manufacturer and witnessed by a qualified independent testing agency.

F. Operating and Maintenance Manuals: Provide manufacturers operating and maintenance manuals for each item comprising the complete door hardware installation in quantity as required in Division 01, Closeout Submittals.

1.4 QUALITY ASSURANCE

A. Manufacturers Qualifications: Engage qualified manufacturers with a minimum 5 years of documented experience in producing hardware and equipment similar to that indicated for this Project and that have a proven record of successful in-service performance.

B. Installer Qualifications: A minimum 3 years documented experience installing both standard and electrified door hardware similar in material, design, and extent to that indicated for this Project and whose work has resulted in construction with a record of successful in-service performance.

C. Door Hardware Supplier Qualifications: Experienced commercial door hardware distributors with a minimum 5 years documented experience supplying both mechanical and electromechanical hardware installations comparable in material, design, and extent to that indicated for this Project. Supplier recognized as a factory direct distributor by the manufacturers of the primary materials with a warehousing facility in Project's vicinity. Supplier to have on staff a certified Architectural Hardware Consultant (AHC) available during the course of the Work to consult with Contractor, Architect, and Owner concerning both standard and electromechanical door hardware and keying.

D. Source Limitations: Obtain each type and variety of door hardware specified in this section from a single source unless otherwise indicated.

1. Electrified modifications or enhancements made to a source manufacturer's product line by a secondary or third party source will not be accepted.

2. Provide electromechanical door hardware from the same manufacturer as mechanical door hardware, unless otherwise indicated.

E. Each unit to bear third party permanent label demonstrating compliance with the referenced standards.

F. Keying Conference: Conduct conference to comply with requirements in Division 01 Section "Project Meetings." Keying conference to incorporate the following criteria into the final keying schedule document:

1. Function of building, purpose of each area and degree of security required.
2. Plans for existing and future key system expansion.
3. Requirements for key control storage and software.
4. Installation of permanent keys, cylinder cores and software.
5. Address and requirements for delivery of keys.

G. Pre-Submittal Conference: Conduct coordination conference in compliance with requirements in Division 01 Section "Project Meetings" with attendance by representatives of Supplier(s), Installer(s), and Contractor(s) to review proper methods and the procedures for receiving, handling, and installing door hardware.

1. Prior to installation of door hardware, conduct a project specific training meeting to instruct the installing contractors' personnel on the proper installation and adjustment of their respective products. Product training to be attended by installers of door hardware (including electromechanical hardware) for aluminum, hollow metal and wood doors. Training will include the use of installation manuals, hardware schedules, templates and physical product samples as required.
2. Inspect and discuss electrical roughing-in, power supply connections, and other preparatory work performed by other trades.
3. Review sequence of operation narratives for each unique access controlled opening.
4. Review and finalize construction schedule and verify availability of materials.
5. Review the required inspecting, testing, commissioning, and demonstration procedures

H. At completion of installation, provide written documentation that components were applied to manufacturer's instructions and recommendations and according to approved schedule.

1.5 DELIVERY, STORAGE, AND HANDLING

A. Inventory door hardware on receipt and provide secure lock-up and shelving for door hardware delivered to Project site. Do not store electronic access control hardware, software or accessories at Project site without prior authorization.

B. Tag each item or package separately with identification related to the final Door Hardware Schedule, and include basic installation instructions with each item or package.

C. Deliver, as applicable, permanent keys, cylinders, cores, access control credentials, software and related accessories directly to Owner via registered mail or overnight package service. Instructions for delivery to the Owner shall be established at the "Keying Conference".

1.6 COORDINATION

A. Templates: Obtain and distribute to the parties involved templates for doors, frames, and other work specified to be factory prepared for installing standard and electrified hardware. Check Shop Drawings of other work to confirm that adequate provisions are made for locating and installing hardware to comply with indicated requirements.

B. Door Hardware and Electrical Connections: Coordinate the layout and installation of scheduled electrified door hardware and related access control equipment with required connections to source power junction boxes, low voltage power supplies, detection and monitoring hardware, and fire and detection alarm systems.

C. Door and Frame Preparation: Doors and corresponding frames are to be prepared, reinforced and pre-wired (if applicable) to receive the installation of the specified electrified, monitoring, signaling and access control system hardware without additional in-field modifications.

1.7 WARRANTY

A. General Warranty: Reference Division 01, General Requirements. Special warranties specified in this Article shall not deprive Owner of other rights Owner may have under other provisions of the Contract Documents and shall be in addition to, and run concurrent with, other warranties made by Contractor under requirements of the Contract Documents.

B. Warranty Period: Written warranty, executed by manufacturer(s), agreeing to repair or replace components of standard and electrified door hardware that fails in materials or workmanship within

specified warranty period after final acceptance by the Owner. Failures include, but are not limited to, the following:

1. Structural failures including excessive deflection, cracking, or breakage.
2. Faulty operation of the hardware.
3. Deterioration of metals, metal finishes, and other materials beyond normal weathering.
4. Electrical component defects and failures within the systems operation.

C. Standard Warranty Period: One year from date of Substantial Completion, unless otherwise indicated.

D. Special Warranty Periods:

1. Ten years for mortise locks and latches.
2. Five years for exit hardware.
3. Twenty five years for manual surface door closer bodies.
4. Five years for motorized electric latch retraction exit devices.
5. Two years for electromechanical door hardware.

1.8 MAINTENANCE SERVICE

A. Maintenance Tools and Instructions: Furnish a complete set of specialized tools and maintenance instructions as needed for Owner's continued adjustment, maintenance, and removal and replacement of door hardware.

PART 2 - PRODUCTS

2.1 SCHEDULED DOOR HARDWARE

A. General: Provide door hardware for each door to comply with requirements in Door Hardware Sets and each referenced section that products are to be supplied under.

B. Designations: Requirements for quantity, item, size, finish or color, grade, function, and other distinctive qualities of each type of door hardware are indicated in the Door Hardware Sets at the end of Part 3. Products are identified by using door hardware designations, as follows:

1. Named Manufacturer's Products: Product designation and manufacturer are listed for each door hardware type required for the purpose of establishing requirements. Manufacturers' names are abbreviated in the Door Hardware Schedule.

C. Substitutions: Requests for substitution and product approval for inclusive mechanical and electromechanical door hardware in compliance with the specifications must be submitted in writing and in accordance with the procedures and time frames outlined in Division 01, Substitution Procedures. Approval of requests is at the discretion of the architect, owner, and their designated consultants.

2.2 HANGING DEVICES

A. Hinges: ANSI/BHMA A156.1 certified butt hinges with number of hinge knuckles as specified in the Door Hardware Sets.

1. Quantity: Provide the following hinge quantity, unless otherwise indicated:

a. Two Hinges: For doors with heights up to 60 inches.

b. Three Hinges: For doors with heights 61 to 90 inches.
c. Four Hinges: For doors with heights 91 to 120 inches.
d. For doors with heights more than 120 inches, provide 4 hinges, plus 1 hinge for every 30 inches of door height greater than 120 inches.

2. Hinge Size: Provide the following, unless otherwise indicated, with hinge widths sized for door thickness and clearances required:

a. Widths up to 3’0”: 4-1/2” standard or heavy weight as specified.
b. Sizes from 3’1” to 4’0”: 5” standard or heavy weight as specified.

3. Hinge Weight and Base Material: Unless otherwise indicated, provide the following:

a. Exterior Doors: Heavy weight, non-ferrous, ball bearing or oil impregnated bearing hinges unless Hardware Sets indicate standard weight.
b. Interior Doors: Standard weight, steel, ball bearing or oil impregnated bearing hinges unless Hardware Sets indicate heavy weight.

4. Hinge Options: Comply with the following:

a. Non-removable Pins: Provide set screw in hinge barrel that, when tightened into a groove in hinge pin, prevents removal of pin while door is closed; for the all out-swinging lockable doors.

5. Acceptable Manufacturers:

a. McKinney Products; ASSA ABLOY Architectural Door Accessories (MK).
b. Stanley Hardware (ST).

B. Pivots: ANSI/BHMA A156.4, Grade 1, certified. Space intermediate pivots equally not less than 25 inches on center apart or not more than 35 inches on center for doors over 121 inches high. Pivot hinges to have oil impregnated bronze bearing in the top pivot and a radial roller and thrust bearing in the bottom pivot with the bottom pivot designed to carry the full weight of the door. Pivots to be UL listed for windstorm where applicable.

1. Acceptable Manufacturers:

a. Architectural Builders Hardware (AH).
b. Rixson Door Controls (RF).

2.3 POWER TRANSFER DEVICES

A. Electrified Quick Connect Transfer Hinges: Provide electrified transfer hinges with Molex™ standardized plug connectors and sufficient number of concealed wires (up to 12) to accommodate the electrified functions specified in the Door Hardware Sets. Connectors plug directly to through-door wiring harnesses for connection to electric locking devices and power supplies. Wire nut connections are not acceptable.

1. Acceptable Manufacturers:

a. McKinney Products; ASSA ABLOY Architectural Door Accessories (MK) - QC (# wires) Option.
b. Stanley Hardware (ST) – C Option.

B. Electrified Quick Connect Intermediate Transfer Pivots: Provide electrified offset intermediate transfer pivot hinges with Molex™ standardized plug connectors and sufficient number of concealed wires (up to 12) to accommodate the electrified functions specified in the Door Hardware Sets. Connectors plug directly to through-door wiring harnesses for connection to electric locking devices and power supplies. Wire nut connections are not acceptable.

1. Acceptable Manufacturers:

a. Architectural Builders Hardware (AH) – EL019-EZ (# wires).
b. Rixson Door Controls (RF) - E-M19-QC (# wires).

C. Electric Door Wire Harnesses: Provide electric/data transfer wiring harnesses with standardized plug connectors to accommodate up to twelve (12) wires. Connectors plug directly to through-door wiring harnesses for connection to electric locking devices and power supplies. Provide sufficient number and type of concealed wires to accommodate electric function of specified hardware. Provide a connector for through-door electronic locking devices and from hinge to junction box above the opening. Wire nut connections are not acceptable. Determine the length required for each electrified hardware component for the door type, size and construction, minimum of two per electrified opening.

1. Provide one each of the following tools as part of the base bid contract:
a. McKinney Products; ASSA ABLOY Architectural Door Accessories (MK) - Electrical Connecting Kit: QC-R001.
b. McKinney Products; ASSA ABLOY Architectural Door Accessories (MK) - Connector Hand Tool: QC-R003.

2. Acceptable Manufacturers:

a. McKinney Products; ASSA ABLOY Architectural Door Accessories (MK) – QC-C Series.
b. Stanley Hardware (ST) – WH Series.

2.4 DOOR OPERATING TRIM

A. Flush Bolts and Surface Bolts: ANSI/BHMA A156.3 and A156.16, Grade 1, certified.

1. Flush bolts to be furnished with top rod of sufficient length to allow bolt retraction device location approximately six feet from the floor.
2. Furnish dust proof strikes for bottom bolts.
3. Surface bolts to be minimum 8” in length and U.L. listed for labeled fire doors and U.L. listed for windstorm components where applicable.
4. Provide related accessories (mounting brackets, strikes, coordinators, etc.) as required for appropriate installation and operation.

5. Acceptable Manufacturers:

a. Door Controls International (DC).
b. Rockwood Products; ASSA ABLOY Architectural Door Accessories (RO).
c. Trimco (TC).

B. Door Push Plates and Pulls: ANSI/BHMA A156.6 certified door pushes and pulls of type and design specified in the Hardware Sets. Coordinate and provide proper width and height as required where conflicting hardware dictates.
1. Fasteners: Provide manufacturer's designated fastener type as indicated in Hardware Sets.

2. Acceptable Manufacturers:

a. Hiawatha, Inc. (HI).
b. Rockwood Products; ASSA ABLOY Architectural Door Accessories (RO).
c. Trimco (TC).

C. Locking Pull System: Post-mount style door pulls with integrated deadbolt locking system in type and design as specified in the Hardware Sets. Pulls available in multiple head, floor, or combination locking options, with outside keyed rim cylinder operation and inside turn piece activation. Mounting applications for aluminum, glass, steel and wood doors, with customized sizing and configuration options. Pull finishes include brass, bronze, and stainless steel.

1. Acceptable Manufacturers:

a. Blumcraft (BL) – Locking Ladder Series.
b. Rockwood Products; ASSA ABLOY Architectural Door Accessories (RO) – LP Series.

2.5 CYLINDERS AND KEYING

A. General: Cylinder manufacturer to have minimum (10) years experience designing secured master key systems and have on record a published security keying system policy.

B. Source Limitations: Obtain each type of keyed cylinder and keys from the same source manufacturer as locksets and exit devices, unless otherwise indicated.

C. Cylinders: Original manufacturer cylinders complying with the following:

1. Mortise Type: Threaded cylinders with rings and cams to suit hardware application.
2. Rim Type: Cylinders with back plate, flat-type vertical or horizontal tailpiece, and raised trim ring.
3. Bored-Lock Type: Cylinders with tailpieces to suit locks.
4. Mortise and rim cylinder collars to be solid and recessed to allow the cylinder face to be flush and be free spinning with matching finishes.

D. Patented Cylinders: ANSI/BHMA A156.5, Grade 1, certified cylinders employing a utility patented and restricted keyway requiring the use of patented controlled keys. Provide bump resistant, fixed core cylinders as standard with solid recessed cylinder collars. Cylinders are to be factory keyed where permanent keying records will be established and maintained.

1. Provide a 6 pin multi-level master key system comprised of patented controlled keys and security and high security cylinders operated by one (1) key of the highest level. Geographical exclusivity to be provided for all security and high security cylinders and UL437 certification where specified.

a. Level 1 Cylinders: Provide utility patented controlled keyway cylinders that are furnished with patented keys available only from authorized distribution.
b. Level 2 Cylinders: Provide utility patented controlled keyway and side bar locking incorporating unique angled bottom pins for geographical exclusivity. Cylinders constructed to provide protection against bumping and picking.
c. Level 3 Cylinders: Provide utility patented controlled keyway and side bar locking incorporating unique angled bottom pins for geographical exclusivity. Cylinders to be UL437 certified and constructed to provide protection against bumping, picking, and drilling.
d. Refer to hardware sets for specified levels.

2. Acceptable Manufacturers:
a. Sargent Manufacturing (SA) - Degree Series.
b. Corbin Russwin (RU) – Access 3 Series.

E. Keying System: Each type of lock and cylinders to be factory keyed.

1. Conduct specified "Keying Conference" to define and document keying system instructions and requirements.
2. Furnish factory cut, nickel-silver large bow permanently inscribed with a visual key control number as directed by Owner.
3. New System: Key locks to a new key system as directed by the Owner.

F. Key Quantity: Provide the following minimum number of keys:

1. Change Keys per Cylinder: Two (2)
2. Master Keys (per Master Key Level/Group): Five (5).
3. Construction Keys (where required): Ten (10).

G. Construction Keying: Provide construction master keyed cylinders.

H. Key Registration List (Bitting List):

1. Provide keying transcript list to Owner's representative in the proper format for importing into key control software.
2. Provide transcript list in writing or electronic file as directed by the Owner.

I. Key Control Cabinet: Provide a key control system including envelopes, labels, and tags with self-locking key clips, receipt forms, 3-way visible card index, temporary markers, permanent markers, and standard metal cabinet. Key control cabinet shall have expansion capacity of 150% of the number of locks required for the project.

1. Acceptable Manufacturers:

a. Lund Equipment (LU).
b. MMF Industries (MM).
c. Telkee (TK).

J. Key Control Software: Provide one network version of "Key Wizard" branded key management software package that includes one year of technical support and upgrades to software at no charge. Provide factory key system formatted for importing into “Key Wizard” software.

2.6 MECHANICAL LOCKS AND LATCHING DEVICES

A. Mortise Locksets, Grade 1 (Heavy Duty): ANSI/BHMA A156.13, Series 1000, Operational Grade 1 certified. Locksets are to be manufactured with a corrosion resistant steel case and be field-reversible for handing without disassembly of the lock body.

1. Acceptable Manufacturers:

a. Corbin Russwin Hardware (RU) – ML2000 Series.
b. Sargent Manufacturing (SA) – 8200 Series.
c. Yale Locks and Hardware (YA) – 8800FL Series.

2.7 INTEGRATED WIEGAND OUTPUT LOCKING DEVICES – MULTI-CLASS READER

A. Integrated Wiegand Output Multi-Class Mortise Locks: Wiegand output ANSI A156.13, Grade 1, mortise lockset with integrated card reader, request-to-exit signaling, door position status switch, and latchbolt monitoring in one complete unit. Hard wired, solenoid driven locking/unlocking control of the lever

handle trim, 3/4" deadlocking anti-friction latch, and 1" case-hardened steel deadbolt. Lock is U.L listed and labeled for use on up to 3 hour fire rated openings. Available with or without keyed high security cylinder override.

1. Open architecture, hard wired platform supports centralized control of locking units with new or existing Wiegand compatible access control systems. Latchbolt monitoring and door position switch act in conjunction to report door-in-frame (DPS) and door latched (door closed and latched) conditions.
2. Integrated reader supports the following credentials:
    a. 125kHz proximity credentials: HID, AWID, Indala, and EM4102.
    b. 13.56 MHz proximity credentials: HID iClass, HID iClass SE, SE for MIFARE Classic, DESFire EV1.
3. 12VDC external power supply required for reader and lock, with optional 24VDC lock solenoid. Fail safe or fail secure options.
4. Energy Efficient Design: Provide lock bodies which have a holding current draw of 15mA maximum, and can operate on either 12 or 24 volts. Locks are to be field configurable for fail safe or fail secure operation.
5. Support end-of-line resistors contained within the lock case.
6. Installation requires only one cable run from the lock to the access control panel without requirements for additional proprietary lock panel interface boards or modules.
7. Installation to include manufacturer's access control panel interface board or module where required for Wiegand output protocol.

8. Acceptable Manufacturers:

    a. Corbin Russwin (RU) – ML2000 SE-LP10 Series.
    b. Sargent Manufacturing (SA) – M1 8200 Series.

2.8 AUXILIARY LOCKS

A. Mortise Deadlocks, Small Case: ANSI/BHMA A156.36, Grade 1, small case mortise type deadlocks constructed of heavy gauge wrought corrosion resistant steel. Steel or stainless steel bolts with a 1" throw and hardened steel roller pins. Deadlocks to be products of the same source manufacturer and keyway as other specified locksets.

1. Acceptable Manufacturers:

    a. Corbin Russwin Hardware (RU) - DL4100 Series.
    b. Sargent Manufacturing (SA) - 4870 Series.
    c. Yale Locks and Hardware (YA) - 350 Series.

2.9 LOCK AND LATCH STRIKES

A. Strikes: Provide manufacturer's standard strike with strike box for each latch or lock bolt, with curved lip extended to protect frame, finished to match door hardware set, unless otherwise indicated, and as follows:

1. Flat-Lip Strikes: For locks with three-piece antifriction latchbolts, as recommended by manufacturer.
2. Extra-Long-Lip Strikes: For locks used on frames with applied wood casing trim.
3. Aluminum-Frame Strike Box: Provide manufacturer's special strike box fabricated for aluminum framing.
4. Double-lipped strikes: For locks at double acting doors. Furnish with retractable stop for rescue hardware applications.

B. Standards: Comply with the following:

1. Strikes for Mortise Locks and Latches: BHMA A156.13.
2. Strikes for Bored Locks and Latches: BHMA A156.2.
3. Strikes for Auxiliary Deadlocks: BHMA A156.36.
4. Dustproof Strikes: BHMA A156.16.

2.10 CONVENTIONAL EXIT DEVICES

A. General Requirements: All exit devices specified herein shall meet or exceed the following criteria:

1. At doors not requiring a fire rating, provide devices complying with NFPA 101 and listed and labeled for "Panic Hardware" according to UL305. Provide proper fasteners as required by manufacturer including sex nuts and bolts at openings specified in the Hardware Sets.

2. Where exit devices are required on fire rated doors, provide devices complying with NFPA 80 and with UL labeling indicating "Fire Exit Hardware". Provide devices with the proper fasteners for installation as tested and listed by UL. Consult manufacturer’s catalog and template book for specific requirements.

3. Except on fire rated doors, provide exit devices with hex key dogging device to hold the pushbar and latch in a retracted position. Provide optional keyed cylinder dogging on devices where specified in Hardware Sets.

4. Devices must fit flat against the door face with no gap that permits unauthorized dogging of the push bar. The addition of filler strips is required in any case where the door light extends behind the device as in a full glass configuration.

5. Electromechanical Options: Subject to same compliance standards and requirements as mechanical exit devices, electrified devices to be of type and design as specified in hardware sets. Include any specific controllers when conventional power supplies are not sufficient to provide the proper inrush current.

6. Lever Operating Trim: Where exit devices require lever trim, furnish manufacturer's heavy duty escutcheon trim with threaded studs for thru-bolts.

    a. Lock Trim Design: As indicated in Hardware Sets, provide finishes and designs to match that of the specified locksets.
    b. Where function of exit device requires a cylinder, provide a cylinder (Rim or Mortise) as specified in Hardware Sets.

7. Vertical Rod Exit Devices: Where surface or concealed vertical rod exit devices are used at interior openings, provide as less bottom rod (LBR) unless otherwise indicated. Provide dust proof strikes where thermal pins are required to project into the floor.

8. Narrow Stile Applications: At doors constructed with narrow stiles, or as specified in Hardware Sets, provide devices designed for maximum 2” wide stiles.

9. Dummy Push Bar: Nonfunctioning push bar matching functional push bar.

10. Rail Sizing: Provide exit device rails factory sized for proper door width application.

11. Through Bolt Installation: For exit devices and trim as indicated in Door Hardware Sets.

B. Conventional Push Rail Exit Devices (Heavy Duty): ANSI/BHMA A156.3, Grade 1 certified panic and fire exit hardware devices furnished in the functions specified in the Hardware Sets. Exit device latch to be stainless steel, pullman type, with deadlock feature.

1. Acceptable Manufacturers:

a. Corbin Russwin Hardware (RU) - ED4000 / ED5000 Series.
b. Sargent Manufacturing (SA) - 80 Series.
c. Von Duprin (VD) - 35A/98 XP Series.

C. Extruded Aluminum Removable Mullions: ANSI/BHMA A156.3 anodized, removable mullions with malleable-iron top and bottom retainers. Mullions to be provided standard with stabilizers and imbedded weather-strip.

1. Acceptable Manufacturers:

a. Corbin Russwin Hardware (RU) – 808 Series.
b. Sargent Manufacturing (SA) - 650A Series.

2.11 INTEGRATED WIEGAND OUTPUT EXIT DEVICES – MULTI-CLASS READER

A. Integrated Wiegand Output Multi-Class Exit Hardware: Wiegand output ANSI 156.3 Grade 1 rim, mortise, and vertical rod exit device hardware with integrated proximity card reader, latchbolt and touchbar monitoring, and request-to-exit signaling, in one complete unit. Hard wired, solenoid driven locking/unlocking control of the lever handle exit trim with 3/4" throw latch bolt. U.L listed and labeled for either panic or "fire exit hardware" for use on up to 3 hour fire rated openings. Available with or without keyed high security cylinder override.

1. Open architecture, hard wired platform supports centralized control of locking units with new or existing Wiegand compatible access control systems. Inside push bar (request-to-exit) signaling and door position (open/closed status) monitoring (via separately connected DPS).
2. Integrated reader supports the following credentials:
   a. 125kHz proximity credentials: HID, AWID, Indala, and EM4102.
   b. 13.56 MHz proximity credentials: HID iClass, HID iClass SE, SE for MIFARE Classic, DESFire EV1.
3. 12VDC external power supply required for reader. 24VDC required for solenoid operated exit trim. Fail safe or fail secure options.
4. Installation requires only one cable run from the exit hardware to the access control panel without requirements for additional proprietary lock panel interface boards or modules.
5. Competitor Alternates Allowed Option>Installation to include manufacturer's access control panel interface board or module where required for Wiegand output protocol.

6. Acceptable Manufacturers:

a. Corbin Russwin (RU) – ED5000 SE-LP10 Series.
b. Sargent Manufacturing (SA) – M1 80 Series.

2.12 DOOR CLOSERS

A. All door closers specified herein shall meet or exceed the following criteria:

1. General: Door closers to be from one manufacturer, matching in design and style, with the same type door preparations and templates regardless of application or spring size. Closers to be non-handed with full sized covers including installation and adjusting information on inside of cover.

2. Standards: Closers to comply with UL-10C for Positive Pressure Fire Test and be U.L. listed for use of fire rated doors.

3. Cycle Testing: Provide closers which have surpassed 15 million cycles in a test witnessed and verified by UL.

4. Size of Units: Comply with manufacturer's written recommendations for sizing of door closers depending on size of door, exposure to weather, and anticipated frequency of use. Where closers are indicated for doors required to be accessible to the physically handicapped, provide units complying with ANSI ICC/A117.1.

5. Closer Arms: Provide heavy duty, forged steel closer arms unless otherwise indicated in Hardware Sets.

6. Closers shall not be installed on exterior or corridor side of doors; where possible install closers on door for optimum aesthetics.

7. Closer Accessories: Provide door closer accessories including custom templates, special mounting brackets, spacers and drop plates as required for proper installation. Provide through-bolt and security type fasteners as specified in the hardware sets.

B. Door Closers, Surface Mounted (Heavy Duty): ANSI/BHMA A156.4, Grade 1 surface mounted, heavy duty door closers with complete spring power adjustment, sizes 1 thru 6; and fully operational adjustable according to door size, frequency of use, and opening force. Closers to be rack and pinion type, one piece cast iron or aluminum alloy body construction, with adjustable backcheck and separate non-critical valves for closing sweep and latch speed control. Provide non-handed units standard.

1. Acceptable Manufacturers:

a. Corbin Russwin Hardware (RU) – DC6000 Series.
b. Sargent Manufacturing (SA) - 351 Series.
c. Norton Door Controls (NO) - 7500 Series.
d. Yale Locks and Hardware (YA) - 4400 Series.

2.13 ELECTROHYDRAULIC DOOR OPERATORS

A. General: Provide low energy operators of size recommended by manufacturer for door size, weight, and movement; for condition of exposure; and for compliance with UL 325. Coordinate operator mechanisms with door operation, hinges, and activation devices.

1. Fire-Rated Doors: Provide door operators for fire-rated door assemblies that comply with NFPA 80 for fire-rated door components and are listed and labeled by a qualified testing agency.

B. Standard: Certified ANSI/BHMA A156.19.

C. Performance Requirements:

1. Opening Force if Power Fails: Not more than 15 lbf required to release a latch if provided, not more than 30 lbf required to manually set door in motion, and not more than 15 lbf required to fully open door.
2. Entrapment Protection: Not more than 15 lbf required to prevent stopped door from closing or opening.

D. Configuration: Surface mounted or in-ground as required. Door operators to control single swinging and pair of swinging doors.

E. Operation: Power opening and spring closing operation capable of meeting ANSI A117.1 accessibility guideline. Provide time delay for door to remain open before initiating closing cycle as required by ANSI/BHMA A156.19. When not in automatic mode, door operator to function as manual door closer with fully adjustable opening and closing forces, with or without electrical power.

F. Features: Operator units to have full feature adjustments for door opening and closing force and speed, backcheck, motor assist acceleration from 0 to 30 seconds, time delay, vestibule interface delay, obstruction recycle, and hold open time from 0 up to 30 seconds.

G. Provide outputs and relays on board the operator to allow for coordination of exit device latch retraction, electric strikes, magnetic locks, card readers, safety and motion sensors and specified auxiliary contacts.

H. Brackets and Reinforcements: Manufacturer's standard, fabricated from aluminum with nonferrous shims for aligning system components.

I. Acceptable Manufacturers: Subject to compliance with requirements, provide products by one of the following:

1. Dorma Products (DO) - ED800 Series.
2. Norton Door Controls (NO) - 6000 Series.
3. Stanley Security Solutions (ST) – D-4990 Series.

2.14 SURFACE MOUNTED CLOSER HOLDERS

A. Multi-Point Closer Holders with Motion Sensor: ANSI A156.15, Grade 1 certified multi-point, closer holder devices designed to keep doors in a held-open position if presence is detected within the opening. Push side or pull side mounting applications having a maximum opening of 180° (hold open to 175°) and dual voltage input (24V /120V). Voltage to be 24VDC unless otherwise specified. Units are fail safe, closing the door in the event of fire alarm system or electrical power interruption.

1. Safe Zone Detection: Closer holders units to have an integral motion sensor device monitoring a "zone of safety" at the door opening. Safe zone detection prevents the door from closing in event of movement within the adjustable sensing field. Movement is detectable in both directions with selectable closer hold open time and senor sensitivity. Provide optional handheld device for programming safe zone sensor settings.

2. Acceptable Manufacturers:

a. Norton Door Controls (NO) - 7100SZ Series.

B. Electromagnetic Door Holders: Certified ANSI A156.15 electromagnetic door holder/releases with a minimum 20 to 40 pounds holding power and single coil construction able to accommodate.12VDC, 24VAC, 24VDC and 120VAC. Coils to be independently wound, employing an integral fuse and armatures to include a positive release button.

1. Acceptable Manufacturers:

a. Rixson (RF) - 980/990 Series.
b. Sargent Manufacturing (SA) - 1560 Series.

2.15 ARCHITECTURAL TRIM

A. Door Protective Trim

1. General: Door protective trim units to be of type and design as specified below or in the Hardware Sets.

2. Size: Fabricate protection plates (kick, armor, or mop) not more than 2" less than door width (LDW) on stop side of single doors and 1” LDW on stop side of pairs of doors, and not more than 1" less than door width on pull side. Coordinate and provide proper width and height as required where conflicting hardware dictates. Height to be as specified in the Hardware Sets.

3. Where plates are applied to fire rated doors with the top of the plate more than 16” above the bottom of the door, provide plates complying with NFPA 80. Consult manufacturer’s catalog and template book for specific requirements for size and applications.

4. Protection Plates: ANSI/BHMA A156.6 certified protection plates (kick, armor, or mop), fabricated from the following:

    a. Stainless Steel: 300 grade, 050-inch thick.

5. Options and fasteners: Provide manufacturer's designated fastener type as specified in the Hardware Sets. Provide countersunk screw holes.

6. Acceptable Manufacturers:

    a. Hiawatha, Inc. (HI).
    b. Rockwood Products; ASSA ABLOY Architectural Door Accessories (RO).
    c. Trimco (TC).

2.16 DOOR STOPS AND HOLDERS

A. General: Door stops and holders to be of type and design as specified below or in the Hardware Sets.

B. Door Stops and Bumpers: ANSI/BHMA A156.16, Grade 1 certified door stops and wall bumpers. Provide wall bumpers, either convex or concave types with anchorage as indicated, unless floor or other types of door stops are specified in Hardware Sets. Do not mount floor stops where they will impede traffic. Where floor or wall bumpers are not appropriate, provide overhead type stops and holders.

1. Acceptable Manufacturers:

    a. Hiawatha, Inc. (HI).
    b. Rockwood Products; ASSA ABLOY Architectural Door Accessories (RO).
    c. Trimco (TC).

C. Overhead Door Stops and Holders: ANSI/BHMA A156.6, Grade 1 certified overhead stops and holders to be surface or concealed types as indicated in Hardware Sets. Track, slide, arm and jamb bracket to be constructed of extruded bronze and shock absorber spring of heavy tempered steel. Provide non-handed design with mounting brackets as required for proper operation and function.

1. Acceptable Manufacturers:

    a. Rixson Door Controls (RF).
    b. Rockwood Products; ASSA ABLOY Architectural Door Accessories (RO).
    c. Sargent Manufacturing (SA).

2.17 ARCHITECTURAL SEALS

A. General: Thresholds, weather-stripping, and gasket seals to be of type and design as specified below or in the Hardware Sets. Provide continuous weatherstrip gasketing on exterior doors and provide smoke, light, or sound gasketing on interior doors where indicated. At exterior applications provide non-corrosive fasteners and elsewhere where indicated.

B. Smoke Labeled Gasketing: Assemblies complying with NFPA 105 that are listed and labeled by a testing and inspecting agency acceptable to authorities having jurisdiction, for smoke control ratings indicated, based on testing according to UL 1784.

1. Provide smoke labeled perimeter gasketing at all smoke labeled openings.

C. Fire Labeled Gasketing: Assemblies complying with NFPA 80 that are listed and labeled by a testing and inspecting agency acceptable to authorities having jurisdiction, for fire ratings indicated, based on testing according to UL-10C.

1. Provide intumescent seals as indicated to meet UL10C Standard for Positive Pressure Fire Tests of Door Assemblies, and NPFA 252, Standard Methods of Fire Tests of Door Assemblies.

D. Sound-Rated Gasketing: Assemblies that are listed and labeled by a testing and inspecting agency, for sound ratings indicated.

E. Replaceable Seal Strips: Provide only those units where resilient or flexible seal strips are easily replaceable and readily available from stocks maintained by manufacturer.

F. Acceptable Manufacturers:

1. National Guard Products (NG).
2. Pemko Products; ASSA ABLOY Architectural Door Accessories (PE).
3. Reese Enterprises, Inc. (RE).

2.18 ELECTRONIC ACCESSORIES

A. Push-Button Switches: Industrial grade momentary or alternate contact, back-lighted push buttons with stainless-steel switch enclosures. 12/24 VDC bi-color illumination suitable for either flush or surface mounting.

1. Acceptable Manufacturers:

a. Security Door Controls (SD) - 400 Series.
b. Securitron (SU) - PB Series.

B. Door Position Switches: Door position magnetic reed contact switches specifically designed for use in commercial door applications. On recessed models the contact and magnetic housing snap-lock into a 1" diameter hole. Surface mounted models include wide gap distance design complete with armored flex cabling. Provide SPDT, N/O switches with optional Rare Earth Magnet installation on steel doors with flush top channels.

1. Acceptable Manufacturers:

a. Security Door Controls (SD) - DPS Series.
b. Securitron (SU) - DPS Series.

C. Wiegand Test Unit: Test unit verifies proper Wiegand output integrated card reader lock installation in the field by testing for proper wiring, card reader data integrity, and lock functionality including lock/unlock, door position, and request-to-exit status. 12 or 24VDC voltage adjustable operating as Fail Safe or Fail Secure.

1. Acceptable Manufacturers:

a. Corbin Russwin Hardware (RU) – WT2 Wiegand Test Unit.
b. Sargent Manufacturing (SA) – WT2 Wiegand Test Unit.
c. Yale Locks and Hardware (YA) – WT2 Wiegand Test Unit.

D. Power Supplies: Provide Nationally Recognized Testing Laboratory Listed 12VDC or 24VDC (field selectable) filtered and regulated power supplies. Include battery backup option with integral battery charging capability in addition to operating the DC load in event of line voltage failure. Provide the least number of units, at the appropriate amperage level, sufficient to exceed the required total draw for the specified electrified hardware and access control equipment.

1. Acceptable Manufacturers:

a. Security Door Controls (SD) - 630 Series.
b. Securitron (SU) - BPS Series.

2.19 FABRICATION

A. Fasteners: Provide door hardware manufactured to comply with published templates generally prepared for machine, wood, and sheet metal screws. Provide screws according to manufacturers recognized installation standards for application intended.

2.20 FINISHES

A. Standard: Designations used in the Hardware Sets and elsewhere indicate hardware finishes complying with ANSI/BHMA A156.18, including coordination with traditional U.S. finishes indicated by certain manufacturers for their products.

B. Provide quality of finish, including thickness of plating or coating (if any), composition, hardness, and other qualities complying with manufacturer's standards, but in no case less than specified by referenced standards for the applicable units of hardware

C. Protect mechanical finishes on exposed surfaces from damage by applying a strippable, temporary protective covering before shipping.

PART 3 - EXECUTION

3.1 EXAMINATION

A. Examine scheduled openings, with Installer present, for compliance with requirements for installation tolerances, labeled fire door assembly construction, wall and floor construction, and other conditions affecting performance.

B. Notify architect of any discrepancies or conflicts between the door schedule, door types, drawings and scheduled hardware. Proceed only after such discrepancies or conflicts have been resolved in writing.

3.2 PREPARATION

A. Hollow Metal Doors and Frames: Comply with ANSI/DHI A115 series.

B. Wood Doors: Comply with ANSI/DHI A115-W series.

3.3 INSTALLATION

A. Install each item of mechanical and electromechanical hardware and access control equipment to comply with manufacturer's written instructions and according to specifications.

1. Installers are to be trained and certified by the manufacturer on the proper installation and adjustment of fire, life safety, and security products including: hanging devices; locking devices; closing devices; and seals.

B. Mounting Heights: Mount door hardware units at heights indicated in following applicable publications, unless specifically indicated or required to comply with governing regulations:

1. Standard Steel Doors and Frames: DHI's "Recommended Locations for Architectural Hardware for Standard Steel Doors and Frames."
2. Wood Doors: DHI WDHS.3, "Recommended Locations for Architectural Hardware for Wood Flush Doors."
3. Where indicated to comply with accessibility requirements, comply with ANSI A117.1 "Accessibility Guidelines for Buildings and Facilities."
4. Provide blocking in drywall partitions where wall stops or other wall mounted hardware is located.

C. Retrofitting: Install door hardware to comply with manufacturer's published templates and written instructions. Where cutting and fitting are required to install door hardware onto or into surfaces that are later to be painted or finished in another way, coordinate removal, storage, and reinstallation of surface protective trim units with finishing work specified in Division 9 Sections. Do not install surface-mounted items until finishes have been completed on substrates involved.

D. Thresholds: Set thresholds for exterior and acoustical doors in full bed of sealant complying with requirements specified in Division 7 Section "Joint Sealants."

E. Storage: Provide a secure lock up for hardware delivered to the project but not yet installed. Control the handling and installation of hardware items so that the completion of the work will not be delayed by hardware losses before and after installation.

3.4 FIELD QUALITY CONTROL

A. Field Inspection: Supplier will perform a final inspection of installed door hardware and state in report whether work complies with or deviates from requirements, including whether door hardware is properly installed, operating and adjusted.

3.5 ADJUSTING

A. Initial Adjustment: Adjust and check each operating item of door hardware and each door to ensure proper operation or function of every unit. Replace units that cannot be adjusted to operate as intended. Adjust door control devices to compensate for final operation of heating and ventilating equipment and to comply with referenced accessibility requirements.

3.6 CLEANING AND PROTECTION

A. Protect all hardware stored on construction site in a covered and dry place. Protect exposed hardware installed on doors during the construction phase. Install any and all hardware at the latest possible time frame.

B. Clean adjacent surfaces soiled by door hardware installation.

C. Clean operating items as necessary to restore proper finish. Provide final protection and maintain conditions that ensure door hardware is without damage or deterioration at time of owner occupancy.

3.7 DEMONSTRATION

A. Instruct Owner's maintenance personnel to adjust, operate, and maintain mechanical and electromechanical door hardware.

3.8 DOOR HARDWARE SETS

A. The hardware sets represent the design intent and direction of the owner and architect. They are a guideline only and should not be considered a detailed hardware schedule. Discrepancies, conflicting hardware and missing items should be brought to the attention of the architect with corrections made prior to the bidding process. Omitted items not included in a hardware set should be scheduled with the appropriate additional hardware required for proper application and functionality.

B. Refer to Section 080671, Door Hardware Sets, for hardware sets.

END OF SECTION 087100

SECTION 088000 - GLAZING

PART 1 - GENERAL

1.1 RELATED DOCUMENTS

A. Drawings and general provisions of the Contract, including General and Supplementary Conditions and Division 01 Specification Sections, apply to this Section.

1.2 SUMMARY

A. Section includes:

1. Glass for windows, doors, interior borrowed lites, storefront framing, and glazed curtain walls.
2. Glazing sealants and accessories.

B. Related Requirements:

1. Section 084113 "Aluminum-Framed Entrances and Storefronts" for system performance requirements.
2. Section 085113 "Aluminum Windows" for system performance requirements.
3. Section 088813 "Fire-Resistant Glazing."

1.3 DEFINITIONS

A. Glass Manufacturers: Firms that produce primary glass, fabricated glass, or both, as defined in referenced glazing publications.

B. Glass Thicknesses: Indicated by thickness designations in millimeters according to ASTM C 1036.

C. IBC: International Building Code.

D. Interspace: Space between lites of an insulating-glass unit.

1.4 COORDINATION

A. Coordinate glazing channel dimensions to provide necessary bite on glass, minimum edge and face clearances, and adequate sealant thicknesses, with reasonable tolerances.

1.5 PREINSTALLATION MEETINGS

A. Preinstallation Conference: Conduct conference at Project site.

1. Review and finalize construction schedule and verify availability of materials, Installer's personnel, equipment, and facilities needed to make progress and avoid delays.
2. Review temporary protection requirements for glazing during and after installation.

1.6 ACTION SUBMITTALS

A. Product Data: For each type of product.

B. Glass Samples: For each type of glass product other than clear monolithic vision glass; 12 inches (300 mm) square.

C. Glazing Schedule: List glass types and thicknesses for each size opening and location. Use same designations indicated on Drawings.

D. Delegated-Design Submittal: For glass indicated to comply with performance requirements and design criteria, including analysis data signed and sealed by the qualified professional engineer responsible for their preparation.

1.7 INFORMATIONAL SUBMITTALS

A. Qualification Data: For Installer and manufacturers of insulating-glass units with sputter-coated, low-E coatings.

B. Product Certificates: For glass.

C. Product Test Reports: For tinted glass, coated glass, insulating glass, and glazing sealants, for tests performed by a qualified testing agency.

1. For glazing sealants, provide test reports based on testing current sealant formulations within previous 36-month period.

1.8 QUALITY ASSURANCE

A. Manufacturer Qualifications for Insulating-Glass Units with Sputter-Coated, Low-E Coatings: A qualified insulating-glass manufacturer who is approved by coated-glass manufacturer.

B. Installer Qualifications: A qualified installer who employs glass installers for this Project who are certified under the National Glass Association's Certified Glass Installer Program.

C. Glass Testing Agency Qualifications: A qualified independent testing agency accredited according to the NFRC CAP 1 Certification Agency Program.

D. Sealant Testing Agency Qualifications: An independent testing agency qualified according to ASTM C 1021 to conduct the testing indicated.

E. Mockups: Build mockups to demonstrate aesthetic effects and to set quality standards for materials and execution.

1. Install glazing in mockups specified in Section 084113 "Aluminum-Framed Entrances and Storefronts" and Section 085113 "Aluminum Windows" to match glazing systems required for Project, including glazing methods.
2. Subject to compliance with requirements, approved mockups may become part of the completed Work if undisturbed at time of Substantial Completion.

1.9 DELIVERY, STORAGE, AND HANDLING

A. Protect glazing materials according to manufacturer's written instructions. Prevent damage to glass and glazing materials from condensation, temperature changes, direct exposure to sun, or other causes.

B. Comply with insulating-glass manufacturer's written instructions for venting and sealing units to avoid hermetic seal ruptures due to altitude change.

1.10 FIELD CONDITIONS

A. Environmental Limitations: Do not proceed with glazing when ambient and substrate temperature conditions are outside limits permitted by glazing material manufacturers and when glazing channel substrates are wet from rain, frost, condensation, or other causes.

1. Do not install glazing sealants when ambient and substrate temperature conditions are outside limits permitted by sealant manufacturer or are below 40 deg F (4.4 deg C).

1.11 WARRANTY

A. Manufacturer's Special Warranty for Coated-Glass Products: Manufacturer agrees to replace coated-glass units that deteriorate within specified warranty period. Deterioration of coated glass is defined as defects developed from normal use that are not attributed to glass breakage or to maintaining and cleaning coated glass contrary to manufacturer's written instructions. Defects include peeling, cracking, and other indications of deterioration in coating.

1. Warranty Period: 10 years from date of Substantial Completion.

B. Manufacturer's Special Warranty for Laminated Glass: Manufacturer agrees to replace laminated-glass units that deteriorate within specified warranty period. Deterioration of laminated glass is defined as defects developed from normal use that are not attributed to glass breakage or to maintaining and cleaning laminated glass contrary to manufacturer's written instructions. Defects include edge separation, delamination materially obstructing vision through glass, and blemishes exceeding those allowed by referenced laminated-glass standard.

1. Warranty Period: 10 years from date of Substantial Completion.

C. Manufacturer's Special Warranty for Insulating Glass: Manufacturer agrees to replace insulating-glass units that deteriorate within specified warranty period. Deterioration of insulating glass is defined as failure of hermetic seal under normal use that is not attributed to glass breakage or to maintaining and cleaning insulating glass contrary to manufacturer's written instructions. Evidence of failure is the obstruction of vision by dust, moisture, or film on interior surfaces of glass.

1. Warranty Period: 10 years from date of Substantial Completion.

PART 2 - PRODUCTS

2.1 MANUFACTURERS

A. Manufacturers: Subject to compliance with requirements, provide products by one of the following:

1. Cardinal Glass Industries.

2. Oldcastle Building Envelope™.
3. Pilkington North America.
4. Vetrotech Saint-Gobain.
5. Viracon, Inc.
6. Vitro.

B. Source Limitations for Glass: Obtain from single source from single manufacturer for each glass type.

1. Obtain tinted glass from single source from single manufacturer.
2. Obtain reflective-coated glass from single source from single manufacturer.

C. Source Limitations for Glazing Accessories: Obtain from single source from single manufacturer for each product and installation method.

2.2 PERFORMANCE REQUIREMENTS

A. General: Installed glazing systems shall withstand normal thermal movement and wind and impact loads (where applicable) without failure, including loss or glass breakage attributable to the following: defective manufacture, fabrication, or installation; failure of sealants or gaskets to remain watertight and airtight; deterioration of glazing materials; or other defects in construction.

B. Delegated Design: Engage a qualified professional engineer, as defined in Section 014000 "Quality Requirements," to design glazing.

C. Structural Performance: Glazing shall withstand the following design loads within limits and under conditions indicated determined according to the IBC and ASTM E 1300.

1. Design Wind Pressures: As indicated on Drawings.
2. Maximum Lateral Deflection: For glass supported on all four edges, limit center-of-glass deflection at design wind pressure to not more than 1/50 times the short-side length or 1 inch (25 mm), whichever is less.

D. Safety Glazing: Where safety glazing is indicated, provide glazing that complies with 16 CFR 1201, Category II.

E. Thermal and Optical Performance Properties: Provide glass with performance properties specified, as indicated in manufacturer's published test data, based on procedures indicated below:

1. For monolithic-glass lites, properties are based on units with lites 6 mm thick.
2. For laminated-glass lites, properties are based on products of construction indicated.
3. For insulating-glass units, properties are based on units of thickness indicated for overall unit and for each lite.
4. U-Factors: Center-of-glazing values, according to NFRC 100 and based on LBL's WINDOW 5.2 computer program, expressed as Btu/sq. ft. x h x deg F (W/sq. m x K).
5. Solar Heat-Gain Coefficient and Visible Transmittance: Center-of-glazing values, according to NFRC 200 and based on LBL's WINDOW 5.2 computer program.
6. Visible Reflectance: Center-of-glazing values, according to NFRC 300.

2.3 GLASS PRODUCTS, GENERAL

A. Glazing Publications: Comply with published recommendations of glass product manufacturers and organizations below unless more stringent requirements are indicated. See these publications for glazing terms not otherwise defined in this Section or in referenced standards.

1. GANA Publications: "Laminated Glazing Reference Manual" and "Glazing Manual."
2. AAMA Publications: AAMA GDSG-1, "Glass Design for Sloped Glazing," and AAMA TIR A7, "Sloped Glazing Guidelines."
3. IGMA Publication for Sloped Glazing: IGMA TB-3001, "Guidelines for Sloped Glazing."
4. IGMA Publication for Insulating Glass: SIGMA TM-3000, "North American Glazing Guidelines for Sealed Insulating Glass Units for Commercial and Residential Use."

B. Safety Glazing Labeling: Where safety glazing is indicated, permanently mark glazing with certification label of the SGCC. Label shall indicate manufacturer's name, type of glass, thickness, and safety glazing standard with which glass complies.

C. Insulating-Glass Certification Program: Permanently marked either on spacers or on at least one component lite of units with appropriate certification label of IGCC.

D. Thickness: Where glass thickness is indicated, it is a minimum. Provide glass that complies with performance requirements and is not less than the thickness indicated.

1. Minimum Glass Thickness for Exterior Lites: 6 mm.
2. Thickness of Tinted Glass: Provide same thickness for each tint color indicated throughout Project.

E. Strength: Where annealed float glass is indicated, provide annealed float glass, heat-strengthened float glass, or fully tempered float glass as needed to comply with "Performance Requirements" Article. Where heat-strengthened float glass is indicated, provide heat-strengthened float glass or fully tempered float glass as needed to comply with "Performance Requirements" Article. Where fully tempered float glass is indicated, provide fully tempered float glass.

2.4 GLASS PRODUCTS

A. Clear Annealed Float Glass: ASTM C 1036, Type I, Class 1 (clear), Quality-Q3.

B. Tinted Annealed Float Glass: ASTM C 1036, Type I, Class 2 (tinted), Quality-Q3.

C. Fully Tempered Float Glass: ASTM C 1048, Kind FT (fully tempered), Condition A (uncoated) unless otherwise indicated, Type I, Class 1 (clear) or Class 2 (tinted) as indicated, Quality-Q3.

1. Fabrication Process: By horizontal (roller-hearth) process with roll-wave distortion parallel to bottom edge of glass as installed unless otherwise indicated.

D. Heat-Strengthened Float Glass: ASTM C 1048, Kind HS (heat strengthened), Type I, Condition A (uncoated) unless otherwise indicated, Type I, Class 1 (clear) or Class 2 (tinted) as indicated, Quality-Q3.

1. Fabrication Process: By horizontal (roller-hearth) process with roll-wave distortion parallel to bottom edge of glass as installed unless otherwise indicated.

2.5 LAMINATED GLASS

A. Laminated Glass: ASTM C 1172. Use materials that have a proven record of no tendency to bubble, discolor, or lose physical and mechanical properties after fabrication and installation.

1. Construction: Laminate glass with polyvinyl butyral interlayer to comply with interlayer manufacturer's written instructions.

2. Interlayer Thickness: Provide thickness not less than that indicated and as needed to comply with requirements.
3. Interlayer Color: Clear unless otherwise indicated.

2.6 INSULATING GLASS

A. Insulating-Glass Units: Factory-assembled units consisting of sealed lites of glass separated by a dehydrated interspace, qualified according to ASTM E 2190.

1. Sealing System: Dual seal, with manufacturer's standard primary and secondary sealants.
2. Perimeter Spacer: Manufacturer's standard spacer material and construction.
3. Desiccant: Molecular sieve or silica gel, or a blend of both.

2.7 GLAZING SEALANTS

A. General:

1. Compatibility: Compatible with one another and with other materials they contact, including glass products, seals of insulating-glass units, and glazing channel substrates, under conditions of service and application, as demonstrated by sealant manufacturer based on testing and field experience.
2. Suitability: Comply with sealant and glass manufacturers' written instructions for selecting glazing sealants suitable for applications indicated and for conditions existing at time of installation.
3. Colors of Exposed Glazing Sealants: As selected by Architect from manufacturer's full range.

B. Glazing Sealant: Neutral-curing silicone glazing sealant complying with ASTM C 920, Type S, Grade NS, Class 50, Use NT.

2.8 GLAZING TAPES

A. Back-Bedding Mastic Glazing Tapes: Preformed, butyl-based, 100 percent solids elastomeric tape; nonstaining and nonmigrating in contact with nonporous surfaces; with or without spacer rod as recommended in writing by tape and glass manufacturers for application indicated; and complying with ASTM C 1281 and AAMA 800 for products indicated below:

1. AAMA 806.3 tape, for glazing applications in which tape is subject to continuous pressure.
2. AAMA 807.3 tape, for glazing applications in which tape is not subject to continuous pressure.

B. Expanded Cellular Glazing Tapes: Closed-cell, PVC foam tapes; factory coated with adhesive on both surfaces; and complying with AAMA 800 for the following types:

1. AAMA 810.1, Type 1, for glazing applications in which tape acts as the primary sealant.
2. AAMA 810.1, Type 2, for glazing applications in which tape is used in combination with a full bead of liquid sealant.

2.9 MISCELLANEOUS GLAZING MATERIALS

A. General: Provide products of material, size, and shape complying with referenced glazing standard, with requirements of manufacturers of glass and other glazing materials for application indicated, and with a proven record of compatibility with surfaces contacted in installation.

B. Cleaners, Primers, and Sealers: Types recommended by sealant or gasket manufacturer.

C. Setting Blocks: Elastomeric material with a Shore, Type A durometer hardness of 85, plus or minus 5.

D. Spacers: Elastomeric blocks or continuous extrusions of hardness required by glass manufacturer to maintain glass lites in place for installation indicated.

E. Edge Blocks: Elastomeric material of hardness needed to limit glass lateral movement (side walking).

2.10 FABRICATION OF GLAZING UNITS

A. Fabricate glazing units in sizes required to fit openings indicated for Project, with edge and face clearances, edge and surface conditions, and bite complying with written instructions of product manufacturer and referenced glazing publications, to comply with system performance requirements.

1. Allow for thermal movements from ambient and surface temperature changes acting on glass framing members and glazing components.

a. Temperature Change: 120 deg F (67 deg C), ambient; 180 deg F (100 deg C), material surfaces.

PART 3 - EXECUTION

3.1 EXAMINATION

A. Examine framing, glazing channels, and stops, with Installer present, for compliance with the following:

1. Manufacturing and installation tolerances, including those for size, squareness, and offsets at corners.
2. Presence and functioning of weep systems.
3. Minimum required face and edge clearances.
4. Effective sealing between joints of glass-framing members.

B. Proceed with installation only after unsatisfactory conditions have been corrected.

3.2 PREPARATION

A. Clean glazing channels and other framing members receiving glass immediately before glazing. Remove coatings not firmly bonded to substrates.

B. Examine glazing units to locate exterior and interior surfaces. Label or mark units as needed so that exterior and interior surfaces are readily identifiable. Do not use materials that leave visible marks in the completed Work.

3.3 GLAZING, GENERAL

A. Comply with combined written instructions of manufacturers of glass, sealants, gaskets, and other glazing materials, unless more stringent requirements are indicated, including those in referenced glazing publications.

B. Protect glass edges from damage during handling and installation. Remove damaged glass from Project site and legally dispose of off Project site. Damaged glass includes glass with edge damage or other imperfections that, when installed, could weaken glass, impair performance, or impair appearance.

C. Apply primers to joint surfaces where required for adhesion of sealants, as determined by preconstruction testing.

D. Install setting blocks in sill rabbets, sized and located to comply with referenced glazing publications, unless otherwise required by glass manufacturer. Set blocks in thin course of compatible sealant suitable for heel bead.

E. Do not exceed edge pressures stipulated by glass manufacturers for installing glass lites.

F. Provide spacers for glass lites where length plus width is larger than 50 inches (1270 mm).

1. Locate spacers directly opposite each other on both inside and outside faces of glass. Install correct size and spacing to preserve required face clearances, unless gaskets and glazing tapes are used that have demonstrated ability to maintain required face clearances and to comply with system performance requirements.
2. Provide 1/8-inch (3-mm) minimum bite of spacers on glass and use thickness equal to sealant width. With glazing tape, use thickness slightly less than final compressed thickness of tape.

G. Provide edge blocking where indicated or needed to prevent glass lites from moving sideways in glazing channel, as recommended in writing by glass manufacturer and according to requirements in referenced glazing publications.

H. Set glass lites in each series with uniform pattern, draw, bow, and similar characteristics.

I. Set glass lites with proper orientation so that coatings face exterior or interior as specified.

J. Where wedge-shaped gaskets are driven into one side of channel to pressurize sealant or gasket on opposite side, provide adequate anchorage so gasket cannot walk out when installation is subjected to movement.

K. Square cut wedge-shaped gaskets at corners and install gaskets in a manner recommended by gasket manufacturer to prevent corners from pulling away; seal corner joints and butt joints with sealant recommended by gasket manufacturer.

3.4 TAPE GLAZING

A. Position tapes on fixed stops so that, when compressed by glass, their exposed edges are flush with or protrude slightly above sightline of stops.

B. Install tapes continuously, but not necessarily in one continuous length. Do not stretch tapes to make them fit opening.

C. Cover vertical framing joints by applying tapes to heads and sills first, then to jambs. Cover horizontal framing joints by applying tapes to jambs, then to heads and sills.

D. Place joints in tapes at corners of opening with adjoining lengths butted together, not lapped. Seal joints in tapes with compatible sealant approved by tape manufacturer.

E. Do not remove release paper from tape until right before each glazing unit is installed.

F. Apply heel bead of elastomeric sealant.

G. Center glass lites in openings on setting blocks, and press firmly against tape by inserting dense compression gaskets formed and installed to lock in place against faces of removable stops. Start gasket applications at corners and work toward centers of openings.

H. Apply cap bead of elastomeric sealant over exposed edge of tape.

3.5 GASKET GLAZING (DRY)

A. Cut compression gaskets to lengths recommended by gasket manufacturer to fit openings exactly, with allowance for stretch during installation.

B. Insert soft compression gasket between glass and frame or fixed stop so it is securely in place with joints miter cut and bonded together at corners.

C. Installation with Drive-in Wedge Gaskets: Center glass lites in openings on setting blocks, and press firmly against soft compression gasket by inserting dense compression gaskets formed and installed to lock in place against faces of removable stops. Start gasket applications at corners and work toward centers of openings. Compress gaskets to produce a weathertight seal without developing bending stresses in glass. Seal gasket joints with sealant recommended by gasket manufacturer.

D. Installation with Pressure-Glazing Stops: Center glass lites in openings on setting blocks, and press firmly against soft compression gasket. Install dense compression gaskets and pressure-glazing stops, applying pressure uniformly to compression gaskets. Compress gaskets to produce a weathertight seal without developing bending stresses in glass. Seal gasket joints with sealant recommended by gasket manufacturer.

E. Install gaskets so they protrude past face of glazing stops.

3.6 SEALANT GLAZING (WET)

A. Install continuous spacers, or spacers combined with cylindrical sealant backing, between glass lites and glazing stops to maintain glass face clearances and to prevent sealant from extruding into glass channel and blocking weep systems until sealants cure. Secure spacers or spacers and backings in place and in position to control depth of installed sealant relative to edge clearance for optimum sealant performance.

B. Force sealants into glazing channels to eliminate voids and to ensure complete wetting or bond of sealant to glass and channel surfaces.

C. Tool exposed surfaces of sealants to provide a substantial wash away from glass.

3.7 CLEANING AND PROTECTION

A. Immediately after installation remove nonpermanent labels and clean surfaces.

B. Protect glass from contact with contaminating substances resulting from construction operations. Examine glass surfaces adjacent to or below exterior concrete and other masonry surfaces at frequent intervals during construction, but not less than once a month, for buildup of dirt, scum, alkaline deposits, or stains.

1. If, despite such protection, contaminating substances do come into contact with glass, remove substances immediately as recommended in writing by glass manufacturer. Remove and replace glass that cannot be cleaned without damage to coatings.

C. Remove and replace glass that is damaged during construction period.

D. Wash glass on both exposed surfaces not more than four days before date scheduled for inspections that establish date of Substantial Completion. Wash glass as recommended in writing by glass manufacturer.

3.8 MONOLITHIC GLASS SCHEDULE

A. Glass Type GL-1: Clear annealed float glass.

1. Minimum Thickness: 6 mm.

B. Glass Type GL-2 Clear heat-strengthened float glass.

1. Minimum Thickness: 6 mm.

C. Glass Type GL-3 (**TEMP)**: Clear fully tempered float glass.

1. Minimum Thickness: 6 mm.
2. Safety glazing required.

3.9 LAMINATED GLASS SCHEDULE

A. Glass Type GL-4 (**LAM)**: Clear laminated glass with two plies of annealed float glass.

1. Basis-of-Design Product: Viracon; Polyvinyl Butyral Laminated Glazing.
2. Minimum Thickness of Each Glass Ply: 3 mm.
3. Interlayer Thickness: 0.030 inch (0.76 mm).
4. Safety glazing required.

3.10 INSULATING GLASS SCHEDULE

A. Glass Type **IG-1**: Low-E-coated, clear insulating glass.

1. Basis-of-Design Product: PPG; Solarban z50 (2) Optiblue + Clear.
2. Overall Unit Thickness: 1 inch (25 mm).
3. Minimum Thickness of Each Glass Lite: 6 mm.
4. Outdoor Lite: Fully tempered float glass.
5. Interspace Content: 90% Argon, 10% Air.
6. Indoor Lite: Fully tempered float glass.
7. Low-E Coating: Sputtered on second surface.
8. Winter Nighttime U-Factor: 0.25 maximum.
9. Visible Light Transmittance: 50 percent minimum.
10. Solar Heat Gain Coefficient: 0.33 maximum.
11. Cradle-to-Cradle (C2) Certification: Silver.
12. Safety glazing required.

END OF SECTION 088000

SECTION 089119 - FIXED LOUVERS

PART 1 - GENERAL

1.1 RELATED DOCUMENTS

A. Drawings and general provisions of the Contract, including General and Supplementary Conditions and Division 01 Specification Sections, apply to this Section.

1.2 SUMMARY

A. Section Includes:

1. Fixed extruded-aluminum louvers.
2. Blank-off panels for louvers.

1.3 DEFINITIONS

A. Louver Terminology: Definitions of terms for metal louvers contained in AMCA 501 apply to this Section unless otherwise defined in this Section or in referenced standards.

B. Horizontal Louver: Louver with horizontal blades (i.e., the axis of the blades are horizontal).

C. Vertical Louver: Louver with vertical blades (i.e., the axis of the blades are vertical).

D. Drainable-Blade Louver: Louver with blades having gutters that collect water and drain it to channels in jambs and mullions, which carry it to bottom of unit and away from opening.

E. Wind-Driven-Rain-Resistant Louver: Louver that provides specified wind-driven-rain performance, as determined by testing according to AMCA 500-L.

F. Windborne-Debris-Impact-Resistant Louver: Louver that provides specified windborne-debris-impact resistance, as determined by testing according to AMCA 540.

1.4 ACTION SUBMITTALS

A. Product Data: For each type of product.

1. For louvers specified to bear AMCA seal, include printed catalog pages showing specified models with appropriate AMCA Certified Ratings Seals.

B. Shop Drawings: For louvers and accessories. Include plans, elevations, sections, details, and attachments to other work. Show frame profiles and blade profiles, angles, and spacing.

1. Show weep paths, gaskets, flashings, sealants, and other means of preventing water intrusion.
2. Show mullion profiles and locations.

C. Samples: For each type of metal finish required.

1.5 INFORMATIONAL SUBMITTALS

A. Product Test Reports: Based on evaluation of comprehensive tests performed according to AMCA 500-L by a qualified testing agency or by manufacturer and witnessed by a qualified testing agency, for each type of louver and showing compliance with performance requirements specified.

1.6 QUALITY ASSURANCE

A. Welding Qualifications: Qualify procedures and personnel according to the following:

1. AWS D1.2/D1.2M.

1.7 FIELD CONDITIONS

A. Field Measurements: Verify actual dimensions of openings by field measurements before fabrication.

1.8 WARRANTY

A. Special Finish Warranty: Manufacturer agrees to repair or replace components on which finishes fail in materials or workmanship within specified warranty period.

1. Deterioration includes, but is not limited to, the following:

a. Color fading more than 5 Hunter units when tested according to ASTM D 2244.
b. Chalking in excess of a No. 8 rating when tested according to ASTM D 4214.
c. Cracking, checking, peeling, or failure of paint to adhere to bare metal.

2. Warranty Period: 10 years from date of Substantial Completion.

PART 2 - PRODUCTS

2.1 MANUFACTURERS

A. Source Limitations: Obtain fixed louvers from single source from a single manufacturer where indicated to be of same type, design, or factory-applied color finish.

2.2 PERFORMANCE REQUIREMENTS

A. Structural Performance: Louvers shall withstand the effects of gravity loads and the following loads and stresses within limits and under conditions indicated without permanent deformation of louver components, noise or metal fatigue caused by louver-blade rattle or flutter, or permanent damage to fasteners and anchors. Wind pressures shall be considered to act normal to the face of the building.

1. Wind Loads: Determine loads based on pressures as indicated on Drawings.

B. Louver Performance Ratings: Provide louvers complying with requirements specified, as demonstrated by testing manufacturer's stock units identical to those provided, except for length and width according to AMCA 500-L.

C. Thermal Movements: Allow for thermal movements from ambient and surface temperature changes.

1. Temperature Change (Range): 120 deg F (67 deg C), ambient; 180 deg F (100 deg C), material surfaces.

D. SMACNA Standard: Comply with recommendations in SMACNA's "Architectural Sheet Metal Manual" for fabrication, construction details, and installation procedures.

2.3 FIXED EXTRUDED-ALUMINUM LOUVERS (**LV-#**)

A. Horizontal, Wind-Driven-Rain-Resistant Louver:

1. Products: Subject to compliance with requirements, provide one of the following:

a. Airolite Company, LLC (The); SCH501.
b. All-Lite Architectural Products; ECD-545.
c. Greenheck Fan Corporation; EHH-501.
d. Ruskin Company; EME520DD.

2. Louver Depth: 5 inches (127 mm).
3. Frame and Blade Nominal Thickness: Not less than 0.080 inch (2.03 mm).
4. Louver Performance Ratings:

a. Free Area: Not less than 6.8 sq. ft. (0.63 sq. m) for 48-inch- (1220-mm-) wide by 48-inch- (1220-mm-) high louver.
b. Air Performance: Not more than 0.10-inch wg (25-Pa) static pressure drop at 800-fpm (4.1-m/s) free-area intake velocity.
c. Wind-Driven Rain Performance: Not less than 99 percent effectiveness when subjected to a rainfall rate of 8 inches (200 mm) per hour and a wind speed of 50 mph (22.4 m/s) at a core-area intake velocity of 400 fpm (2.0 m/s).

5. AMCA Seal: Mark units with AMCA Certified Ratings Seal.

2.4 LOUVER SCREENS

A. General: Provide screen at each exterior louver.

1. Screen Location for Fixed Louvers: Interior face.
2. Screening Type: Bird screening.

B. Secure screen frames to louver frames with stainless-steel machine screws, spaced a maximum of 6 inches (150 mm) from each corner and at 12 inches (300 mm) o.c.

C. Louver Screen Frames: Fabricate with mitered corners to louver sizes indicated.

1. Metal: Same type and form of metal as indicated for louver to which screens are attached. Reinforce extruded-aluminum screen frames at corners with clips.
2. Finish: Same finish as louver frames to which louver screens are attached.
3. Type: Non-rewirable, U-shaped frames.

D. Louver Screening for Aluminum Louvers:

1. Bird Screening: Aluminum, 1/2-inch- (13-mm-) square mesh, 0.063-inch (1.60-mm) wire.

2.5 BLANK-OFF PANELS

A. Insulated Blank-Off Panels: Laminated panels consisting of an insulating core surfaced on back and front with metal sheets and attached to back of louver.

1. Thickness: 2 inches (50 mm).
2. Metal Facing Sheets: Aluminum sheet, not less than 0.032-inch (0.81-mm) nominal thickness.
3. Insulating Core: Extruded-polystyrene foam.
4. Edge Treatment: Trim perimeter edges of blank-off panels with louver manufacturer's standard extruded-aluminum-channel frames, not less than 0.080-inch (2.03-mm) nominal thickness, with corners mitered and with same finish as panels.
5. Seal perimeter joints between panel faces and louver frames with gaskets or sealant.
6. Panel Finish: Same type of finish applied to louvers, but black color.
7. Attach blank-off panels with clips.

2.6 MATERIALS

A. Aluminum Extrusions: ASTM B 221 (ASTM B 221M), Alloy 6063-T5, T-52, or T6.

B. Aluminum Sheet: ASTM B 209 (ASTM B 209M), Alloy 3003 or 5005, with temper as required for forming, or as otherwise recommended by metal producer for required finish.

C. Fasteners: Use types and sizes to suit unit installation conditions.

1. Use Phillips flat-head screws for exposed fasteners unless otherwise indicated.
2. For fastening aluminum, use aluminum or 300 series stainless-steel fasteners.
3. For color-finished louvers, use fasteners with heads that match color of louvers.

D. Postinstalled Fasteners for Concrete and Masonry: Torque-controlled expansion anchors, fabricated from stainless-steel components, with allowable load or strength design capacities calculated according to ICC-ES AC193 and ACI 318 greater than or equal to the design load, as determined by testing according to ASTM E 488/E 488M conducted by a qualified testing agency.

E. Bituminous Paint: Cold-applied asphalt emulsion complying with ASTM D 1187/D 1187M.

2.7 FABRICATION

A. Factory assemble louvers to minimize field splicing and assembly. Disassemble units as necessary for shipping and handling limitations. Clearly mark units for reassembly and coordinated installation.

B. Vertical Assemblies: Where height of louver units exceeds fabrication and handling limitations, fabricate units to permit field-bolted assembly with close-fitting joints in jambs and mullions, reinforced with splice plates.

1. Continuous Vertical Assemblies: Fabricate units without interrupting blade-spacing pattern.

C. Maintain equal louver blade spacing, including separation between blades and frames at head and sill, to produce uniform appearance.

D. Fabricate frames, including integral sills, to fit in openings of sizes indicated, with allowances made for fabrication and installation tolerances, adjoining material tolerances, and perimeter sealant joints.

1. Frame Type: Channel unless otherwise indicated.

E. Include supports, anchorages, and accessories required for complete assembly.

F. Provide vertical mullions of type and at spacings indicated, but not more than is recommended by manufacturer, or 72 inches (1830 mm) o.c., whichever is less.

1. Semirecessed Mullions: Where indicated, provide mullions partly recessed behind louver blades, so louver blades appear continuous. Where length of louver exceeds fabrication and handling limitations, fabricate with interlocking split mullions and close-fitting blade splices designed to permit expansion and contraction.

G. Provide subsills made of same material as louvers for recessed louvers.

H. Join frame members to each other and to fixed louver blades with fillet welds concealed from view unless otherwise indicated or size of louver assembly makes bolted connections between frame members necessary.

2.8 ALUMINUM FINISHES

A. Finish louvers after assembly.

B. High-Performance Organic Finish: Two-coat fluoropolymer finish complying with AAMA 2605 and containing not less than 70 percent PVDF resin by weight in color coat. Prepare, pretreat, and apply coating to exposed metal surfaces to comply with coating and resin manufacturers' written instructions.

1. Color and Gloss: Match metal wall panel (MWP) in Section 074213.13 “Formed Metal Wall Panels.”

PART 3 - EXECUTION

3.1 EXAMINATION

A. Examine substrates and openings, with Installer present, for compliance with requirements for installation tolerances and other conditions affecting performance of the Work.

B. Proceed with installation only after unsatisfactory conditions have been corrected.

3.2 PREPARATION

A. Coordinate setting drawings, diagrams, templates, instructions, and directions for installation of anchorages that are to be embedded in concrete or masonry construction. Coordinate delivery of such items to Project site.

3.3 INSTALLATION

A. Locate and place louvers level, plumb, and at indicated alignment with adjacent work.

B. Use concealed anchorages where possible. Provide brass or lead washers fitted to screws where required to protect metal surfaces and to make a weathertight connection.

C. Form closely fitted joints with exposed connections accurately located and secured.

D. Provide perimeter reveals and openings of uniform width for sealants and joint fillers, as indicated.

E. Protect unpainted galvanized- and nonferrous-metal surfaces that are in contact with concrete, masonry, or dissimilar metals from corrosion and galvanic action by applying a heavy coating of bituminous paint or by separating surfaces with waterproof gaskets or nonmetallic flashing.

F. Install concealed gaskets, flashings, joint fillers, and insulation as louver installation progresses, where weathertight louver joints are required. Comply with Section 079200 "Joint Sealants" for sealants applied during louver installation.

3.4 ADJUSTING AND CLEANING

A. Clean exposed louver surfaces that are not protected by temporary covering, to remove fingerprints and soil during construction period. Do not let soil accumulate during construction period.

B. Before final inspection, clean exposed surfaces with water and a mild soap or detergent not harmful to finishes. Thoroughly rinse surfaces and dry.

C. Restore louvers damaged during installation and construction, so no evidence remains of corrective work. If results of restoration are unsuccessful, as determined by Architect, remove damaged units and replace with new units.

1. Touch up minor abrasions in finishes with air-dried coating that matches color and gloss of, and is compatible with, factory-applied finish coating.

END OF SECTION 089119

SECTION 088813 - FIRE-RESISTANT GLAZING

PART 1 - GENERAL

1.1 RELATED DOCUMENTS

A. Drawings and general provisions of the Contract, including General and Supplementary Conditions and Division 01 Specification Sections, apply to this Section.

1.2 SUMMARY

A. Section Includes:

1. Fire-protection-rated glazing.
2. Fire-resistance-rated glazing.

1.3 DEFINITIONS

A. Glass Manufacturers: Firms that produce primary glass, fabricated glass, or both, as defined in referenced glazing publications.

B. Glass Thicknesses: Indicated by thickness designations in millimeters according to ASTM C 1036.

1.4 COORDINATION

A. Coordinate glazing channel dimensions to provide necessary bite on glass, minimum edge and face clearances, and adequate sealant thicknesses, with reasonable tolerances.

1.5 ACTION SUBMITTALS

A. Product Data: For each type of product.

B. Glass Samples: For each type of glass product; 12 inches (300 mm) square.

C. Glazing Schedule: List glass types and thicknesses for each size opening and location. Use same designations indicated on Drawings.

1.6 INFORMATIONAL SUBMITTALS

A. Qualification Data: For installers.

B. Product Certificates: For each type of glass and glazing product, from manufacturer.

C. Sample Warranties: For special warranties.

1.7 QUALITY ASSURANCE

A. Installer Qualifications: A qualified installer who employs glass installers for this Project who are certified under the National Glass Association's Certified Glass Installer Program.

1.8 DELIVERY, STORAGE, AND HANDLING

A. Protect glazing materials according to manufacturer's written instructions. Prevent damage to glass and glazing materials from condensation, temperature changes, direct exposure to sun, or other causes.

1.9 FIELD CONDITIONS

A. Environmental Limitations: Do not deliver or install fire-resistant glazing until spaces are enclosed and weathertight and temporary HVAC system is operating and maintaining ambient temperature conditions at occupancy levels during the remainder of the construction period.

1.10 WARRANTY

A. Manufacturer's Special Warranty on Laminated Glass: Manufacturer agrees to replace laminated-glass units that deteriorate within specified warranty period. Deterioration of laminated glass is defined as defects developed from normal use that are not attributed to glass breakage or to maintaining and cleaning laminated glass contrary to manufacturer's written instructions. Defects include edge separation, delamination materially obstructing vision through glass, and blemishes exceeding those allowed by referenced laminated-glass standard.

1. Warranty Period: Five years from date of Substantial Completion.

B. Manufacturer's Special Warranty on Double Glazing Units with Clear Gel Fill: Manufacturer agrees to replace units that deteriorate within specified warranty period. Deterioration of double glazing units with clear gel fill is defined as failure of hermetic seal under normal use that is not attributed to glass breakage or to maintaining and cleaning glass contrary to manufacturer's written instructions. Evidence of failure is the leakage of gel fill from units, air bubbles within units, or obstruction of vision by contamination or deterioration of gel.

1. Warranty Period: Five years from date of Substantial Completion.

PART 2 - PRODUCTS

2.1 MANUFACTURERS

A. Source Limitations for Glass: Obtain from single source from single manufacturer for each glass type.

B. Source Limitations for Glazing Accessories: Obtain from single source from single manufacturer for each product and installation method.

2.2 PERFORMANCE REQUIREMENTS

A. General: Installed glazing systems shall withstand normal thermal movement and impact loads (where applicable) without failure, including loss or glass breakage attributable to the following: defective

manufacture, fabrication, or installation; deterioration of glazing materials; or other defects in construction.

2.3 GLASS PRODUCTS, GENERAL

A. Glazing Publications: Comply with published recommendations of glass product manufacturers and organization below unless more stringent requirements are indicated. Refer to these publications for glazing terms not otherwise defined in this Section or in referenced standards.

1. GANA Publications: "Laminated Glazing Reference Manual" and "Glazing Manual."

B. Safety Glazing Labeling: Permanently mark glazing with certification label of the Safety Glazing Certification Council. Label shall indicate manufacturer's name, type of glass, glass thickness, and safety glazing standard with which glass complies.

2.4 GLASS PRODUCTS

A. Float Glass: ASTM C 1036, Type I, Quality-Q3, Class I (clear) unless otherwise indicated.

B. Ultraclear Float Glass: ASTM C 1036, Type I, Quality-Q3, Class I (clear), with visible light transmission not less than 91 percent.

C. Tempered Float Glass: ASTM C 1048, Kind FT (fully tempered), Condition A (uncoated) unless otherwise indicated, Type I, Class I (clear) unless otherwise indicated, Quality-Q3.

1. Fabrication Process: By horizontal (roller-hearth) process with roll-wave distortion parallel to bottom edge of glass as installed unless otherwise indicated.

D. Laminated Glass: ASTM C 1172. Use materials that have a proven record of no tendency to bubble, discolor, or lose physical and mechanical properties after fabrication and installation.

1. Construction: Laminate glass with polyvinyl butyral interlayer unless fire-protection or fire-resistance rating is based on another product.
2. Interlayer Thickness: Provide thickness as needed to comply with requirements.
3. Interlayer Color: Clear unless otherwise indicated.

2.5 FIRE-PROTECTION-RATED GLAZING

A. Fire-Protection-Rated Glazing: Listed and labeled by a testing agency acceptable to authorities having jurisdiction, for fire-protection ratings indicated, based on positive-pressure testing according to NFPA 257 or UL 9, including the hose-stream test, and shall comply with NFPA 80.

1. Fire-protection-rated glazing required to have a fire-protection rating of 20 minutes shall be exempt from the hose-stream test.

B. Fire-Protection-Rated Glazing Labeling: Permanently mark fire-protection-rated glazing with certification label of a testing agency acceptable to authorities having jurisdiction. Label shall indicate manufacturer's name; test standard; whether glazing is permitted to be used in doors or openings; if permitted in openings, whether or not glazing has passed the hose-stream test; whether or not glazing meets 450 deg F (250 deg C) temperature-rise limitation; and the fire-resistance rating in minutes.

C. Laminated Ceramic Glazing: Laminated glass made from two plies of clear, ceramic glass; 8-mm total thickness; and complying with 16 CFR 1201, Category II.

1. Products: Subject to compliance with requirements, provide one of the following:

a. AGC Glass Company North America, Inc.; Pyran Platinum L.
b. SAFTI FIRST Fire Rated Glazing Solutions; Pyran Platinum L.
c. Technical Glass Products; FireLite Plus.
d. Vetrotech Saint-Gobain; Keralite Laminated.

2.6 FIRE-RESISTANCE-RATED GLAZING

A. Fire-Resistance-Rated Glazing: Listed and labeled by a testing agency acceptable to authorities having jurisdiction, for fire-resistance ratings indicated, based on testing according to ASTM E 119 or UL 263.

B. Fire-Resistance-Rated Glazing Labeling: Permanently mark fire-resistance-rated glazing with certification label of a testing agency acceptable to authorities having jurisdiction. Label shall indicate manufacturer's name, test standard, that the glazing is approved for use in walls, and the fire-resistance rating in minutes.

C. Laminated Glass with Intumescent Interlayers: Laminated glass made from multiple plies of uncoated, ultraclear float glass; with intumescent interlayers; and complying with 16 CFR 1201, Category II.

1. Products: Subject to compliance with requirements, available products that may be incorporated into the Work include, but are not limited to the following:

a. AGC Glass Company North America, Inc.; Pyrobel.
b. Pilkington North America; Pyrostop.
c. SAFTI FIRST Fire Rated Glazing Solutions; SuperLite II-series.
d. Technical Glass Products; Pyrostop.
e. Vetrotech Saint-Gobain; SGG Contraflam.

D. Double Glazing Units with Clear Gel Fill: Double glazing units made from two lites of uncoated, fully tempered, ultraclear float glass; with a perimeter edge seal enclosing a cavity filled with optically clear, intumescent gel; and complying with 16 CFR 1201, Category II.

1. Manufacturers: Subject to compliance with requirements, provide products by the following:

a. AGC Glass Company North America, Inc.
b. Pilkington North America.
c. SAFTI FIRST Fire Rated Glazing Solutions.
d. Technical Glass Products.
e. Vetrotech Saint-Gobain.

2.7 GLAZING ACCESSORIES

A. Provide glazing gaskets, glazing sealants, glazing tapes, setting blocks, spacers, edge blocks, and other glazing accessories that are compatible with glazing products and each other and are approved by testing agencies that listed and labeled fire-resistant glazing products with which products are used for applications and fire-protection ratings indicated.

B. Glazing Sealants for Fire-Rated Glazing Products: Neutral-curing silicone glazing sealant complying with ASTM C 920, Type S, Grade NS, Class 50, Use NT. Comply with sealant and glass manufacturers' written instructions for selecting glazing sealants suitable for applications indicated.

1. Colors of Exposed Glazing Sealants: As selected by Architect from manufacturer's full range.

C. Back-Bedding Mastic Glazing Tapes: Preformed, butyl-based, 100 percent solids elastomeric tape; nonstaining and nonmigrating in contact with nonporous surfaces; with or without spacer rod as recommended in writing by tape and glass manufacturers for application indicated; and complying with ASTM C 1281 and AAMA 800 for products indicated below:

1. AAMA 804.3 tape, where indicated.
2. AAMA 806.3 tape, for glazing applications in which tape is subject to continuous pressure.
3. AAMA 807.3 tape, for glazing applications in which tape is not subject to continuous pressure.

D. Expanded Cellular Glazing Tapes: Closed-cell, PVC foam tapes; factory coated with adhesive on both surfaces; and complying with AAMA 800 for the following types:

1. AAMA 810.1, Type 1, for glazing applications in which tape acts as the primary sealant.
2. AAMA 810.1, Type 2, for glazing applications in which tape is used in combination with a full bead of liquid sealant.

2.8 MISCELLANEOUS GLAZING MATERIALS

A. General: Provide products of material, size, and shape complying with referenced glazing standard, requirements of manufacturers of glass and other glazing materials for application indicated, and with a proven record of compatibility with surfaces contacted in installation.

B. Cylindrical Glazing Sealant Backing: ASTM C 1330, Type O (open-cell material), of size and density to control glazing sealant depth and otherwise produce optimum glazing sealant performance.

C. Perimeter Insulation for Fire-Resistive Glazing: Product that is approved by testing agency that listed and labeled fire-resistant glazing product with which it is used for application and fire-protection rating indicated.

2.9 FABRICATION OF GLAZING UNITS

A. Fabricate glazing units in sizes required to fit openings indicated for Project, with edge and face clearances, edge and surface conditions, and bite complying with written instructions of product manufacturer and referenced glazing publications, to comply with system performance requirements.

PART 3 - EXECUTION

3.1 EXAMINATION

A. Examine framing, glazing channels, and stops, with Installer present, for compliance with manufacturing and installation tolerances, including those for size, squareness, and offsets at corners, and for compliance with minimum required face and edge clearances.

B. Proceed with installation only after unsatisfactory conditions have been corrected.

3.2 PREPARATION

A. Clean glazing channels and other framing members receiving glass immediately before glazing. Remove coatings not firmly bonded to substrates.

B. Examine glazing units to locate fire side and protected side. Label or mark units as needed so that fire side and protected side are readily identifiable. Do not use materials that leave visible marks in the completed work.

3.3 GLAZING, GENERAL

A. Use methods approved by testing agencies that listed and labeled fire-resistant glazing products.

B. Comply with combined written instructions of manufacturers of glass, sealants, gaskets, and other glazing materials unless more stringent requirements are indicated, including those in referenced glazing publications.

C. Protect glass edges from damage during handling and installation. Remove damaged glass from Project site and legally dispose of off Project site. Damaged glass is glass with edge damage or other imperfections that, when installed, could weaken glass and impair performance and appearance.

D. Apply primers to joint surfaces where required for adhesion of sealants, as determined by preconstruction testing.

E. Install setting blocks in sill rabbets, sized and located to comply with referenced glazing publications unless otherwise required by glass manufacturer. Set blocks in thin course of compatible sealant suitable for heel bead.

F. Do not exceed edge pressures stipulated by glass manufacturers for installing glass lites.

G. Provide spacers for glass lites where length plus width is larger than 50 inches (1270 mm).

1. Locate spacers directly opposite each other on both inside and outside faces of glass. Install correct size and spacing to preserve required face clearances unless gaskets and glazing tapes are used that have demonstrated ability to maintain required face clearances and to comply with system performance requirements.
2. Provide 1/8-inch (3-mm) minimum bite of spacers on glass and use thickness equal to sealant width. With glazing tape, use thickness slightly less than final compressed thickness of tape.

H. Provide edge blocking where indicated or needed to prevent glass lites from moving sideways in glazing channel, as recommended in writing by glass manufacturer and according to requirements in referenced glazing publications.

I. Set glass lites with proper orientation so that coatings face fire side or protected side as specified.

J. Where wedge-shaped gaskets are driven into one side of channel to pressurize sealant or gasket on opposite side, provide adequate anchorage so gasket cannot walk out when installation is subjected to movement.

K. Square cut wedge-shaped gaskets at corners and install gaskets in a manner recommended by gasket manufacturer to prevent corners from pulling away; seal corner joints and butt joints with sealant recommended by gasket manufacturer.

3.4 TAPE GLAZING

A. Position tapes on fixed stops so that, when compressed by glass, their exposed edges are flush with or protrude slightly above sightline of stops.

B. Install tapes continuously, but not necessarily in one continuous length. Do not stretch tapes to make them fit opening.

C. Cover vertical framing joints by applying tapes to heads and sills first and then to jambs. Cover horizontal framing joints by applying tapes to jambs and then to heads and sills.

D. Place joints in tapes at corners of opening with adjoining lengths butted together, not lapped. Seal joints in tapes with compatible sealant approved by tape manufacturer.

E. Do not remove release paper from tape until right before each glazing unit is installed.

F. Apply heel bead of elastomeric sealant.

G. Center glass lites in openings on setting blocks and press firmly against tape by inserting dense compression gaskets formed and installed to lock in place against faces of removable stops. Start gasket applications at corners and work toward centers of openings.

H. Apply cap bead of elastomeric sealant over exposed edge of tape.

3.5 GASKET GLAZING (DRY)

A. Cut compression gaskets to lengths recommended by gasket manufacturer to fit openings exactly, with allowance for stretch during installation.

B. Insert soft compression gasket between glass and frame or fixed stop, so it is securely in place with joints miter cut and bonded together at corners.

C. Installation with Drive-in Wedge Gaskets: Center glass lites in openings on setting blocks and press firmly against soft compression gasket by inserting dense compression gaskets formed and installed to lock in place against faces of removable stops. Start gasket applications at corners and work toward centers of openings.

D. Install gaskets so they protrude past face of glazing stops.

3.6 SEALANT GLAZING (WET)

A. Install continuous spacers, or spacers combined with cylindrical sealant backing, between glass lites and glazing stops to maintain glass face clearances. Secure spacers or spacers and backings in place and in position to control depth of installed sealant relative to edge clearance for optimum sealant performance.

B. Force sealants into glazing channels to eliminate voids and to ensure complete wetting or bond of sealant to glass and channel surfaces.

C. Tool exposed surfaces of sealants to provide a substantial washaway from glass.

3.7 CLEANING AND PROTECTION

A. Immediately after installation, remove nonpermanent labels and clean surfaces.

B. Protect glass from contact with contaminating substances resulting from construction operations. Examine glass surfaces adjacent to or below exterior concrete and other masonry surfaces at frequent intervals during construction, but not less than once a month, for buildup of dirt, scum, alkaline deposits, or stains.

1. If, despite such protection, contaminating substances do come into contact with glass, remove substances immediately as recommended in writing by glass manufacturer.

C. Remove and replace glass that is damaged during construction period.

D. Wash glass on both exposed surfaces in each area of Project not more than four days before date scheduled for inspections that establish date of Substantial Completion. Wash glass as recommended in writing by glass manufacturer.

3.8 FIRE-PROTECTION-RATED GLAZING SCHEDULE

A. Glass Type **FPGL-1**: 45-minute fire-protection-rated glazing; laminated ceramic glazing.

B. Glass Type **FPGL-2**: 60-minute fire-protection-rated glazing with 450 deg F (250 deg C) temperature-rise limitation; laminated ceramic glazing.

3.9 FIRE-RESISTANCE-RATED GLAZING SCHEDULE

A. Glass Type **FRGL-1**: 60-minute fire-resistance-rated glazing with 450 deg F (250 deg C) temperature-rise limitation; laminated glass with intumescent interlayers or double glazing units with clear gel fill.

B. Glass Type **FRGL-2**: 90-minute fire-resistance-rated glazing with 450 deg F (250 deg C) temperature-rise limitation; laminated glass with intumescent interlayers or double glazing units with clear gel fill.

END OF SECTION 088813

SECTION 092116.23 - GYPSUM BOARD SHAFT WALL ASSEMBLIES

PART 1 - GENERAL

1.1 RELATED DOCUMENTS

A. Drawings and general provisions of the Contract, including General and Supplementary Conditions and Division 01 Specification Sections, apply to this Section.

1.2 SUMMARY

A. Section includes gypsum board shaft wall assemblies.

B. Related Requirements:

1. Section 054000 "Cold-Formed Metal Framing" for exterior and interior load-bearing and exterior non-load-bearing wall studs; floor joists; roof rafters and ceiling joists; and roof trusses.
2. Section 092216 "Non-Structural Metal Framing" for interior non-load-bearing framing and suspension systems.
3. Section 092900 "Gypsum Board" for gypsum board installed on non-structural metal framing.

1.3 ACTION SUBMITTALS

A. Product Data: For each component of gypsum board shaft wall assembly.

1.4 DELIVERY, STORAGE, AND HANDLING

A. Store materials inside under cover and keep them dry and protected against weather, condensation, direct sunlight, construction traffic, and other potential causes of damage. Stack panels flat and support them on risers on a flat platform to prevent sagging.

1.5 FIELD CONDITIONS

A. Environmental Limitations: Comply with gypsum-shaftliner-board manufacturer's written instructions.

B. Do not install finish panels until installation areas are enclosed and conditioned.

C. Do not install panels that are wet, moisture damaged, or mold damaged.

1. Indications that panels are wet or moisture damaged include, but are not limited to, discoloration, sagging, and irregular shape.
2. Indications that panels are mold damaged include, but are not limited to, fuzzy or splotchy surface contamination and discoloration.

PART 2 - PRODUCTS

2.1 PERFORMANCE REQUIREMENTS

A. Fire-Resistance-Rated Assemblies: For fire-resistance-rated assemblies, provide materials and construction identical to those tested in assembly indicated according to ASTM E 119 by an independent testing agency.

2.2 GYPSUM BOARD SHAFT WALL ASSEMBLIES

A. Fire-Resistance Rating: 1 hour.

B. Gypsum Shaftliner Board:

1. Moisture- and Mold-Resistant Type X: ASTM C 1396/C 1396M; manufacturer's proprietary fire-resistive liner panels with ASTM D 3273 mold-resistance score of 10 as rated according to ASTM D 3274, 1 inch (25.4 mm) thick, and with double beveled long edges.

a. Products: Subject to compliance with requirements, provide one of the following:

1) Georgia-Pacific Building Products; Dens-Glass Ultra Shaftliner.
2) National Gypsum Company; Gold Bond Brand Fire-Shield Shaftliner XP.
3) United States Gypsum Company; Sheetrock Brand Mold Tough Gypsum Liner Panel.

C. Non-Load-Bearing Steel Framing, General: Complying with ASTM C 645 requirements for metal unless otherwise indicated and complying with requirements for fire-resistance-rated assembly indicated.

1. Protective Coating: ASTM A 653/A 653M, G40 (Z120), hot-dip galvanized unless otherwise indicated.

D. Studs: Manufacturer's standard profile for repetitive, corner, and end members as follows:

1. Depth: As indicated in manufacturer’s load-span tables and as required by UL Assembly.
1. Minimum Base-Metal Thickness: As indicated in manufacturer’s load-span tables and as required by UL Assembly.

E. Runner Tracks: Manufacturer's standard J-profile track with manufacturer's standard long-leg length, but at least 2 inches (51 mm) long and matching studs in depth.

1. Minimum Base-Metal Thickness: As indicated in manufacturer’s load-span tables and as required by UL Assembly.

F. Finish Panels: Gypsum board as specified in Section 092900 "Gypsum Board.".

2.3 AUXILIARY MATERIALS

A. General: Provide auxiliary materials that comply with shaft wall manufacturer's written instructions.

B. Trim Accessories: Cornerbead, edge trim, and control joints of material and shapes as specified in Section 092900 "Gypsum Board" that comply with gypsum board shaft wall assembly manufacturer's written instructions for application indicated.

C. Steel Drill Screws: ASTM C 1002 unless otherwise indicated.

D. Track Fasteners: Power-driven fasteners of size and material required to withstand loading conditions imposed on shaft wall assemblies without exceeding allowable design stress of track, fasteners, or structural substrates in which anchors are embedded.

1. Expansion Anchors: Fabricated from corrosion-resistant materials, with allowable load or strength design capacities calculated according to ICC-ES AC193 and ACI 318 greater than or equal to the design load, as determined by testing per ASTM E 488/E 488M conducted by a qualified testing agency.

E. Reinforcing: Galvanized-steel reinforcing strips with 0.033-inch (0.84-mm) minimum thickness of base metal (uncoated).

PART 3 - EXECUTION

3.1 EXAMINATION

A. Examine substrates and conditions, with Installer present, for compliance with requirements for installation tolerances and other conditions affecting performance of the Work.

B. Examine panels before installation. Reject panels that are wet, moisture damaged, or mold damaged.

C. Proceed with installation only after unsatisfactory conditions have been corrected.

3.2 PREPARATION

A. Sprayed Fire-Resistive Materials: Coordinate with gypsum board shaft wall assemblies so both elements of Work remain complete and undamaged. Patch or replace sprayed fire-resistive materials removed or damaged during installation of shaft wall assemblies to comply with requirements specified in Section 078100 "Applied Fireproofing."

B. After sprayed fire-resistive materials are applied, remove only to extent necessary for installation of gypsum board shaft wall assemblies and without reducing the fire-resistive material thickness below that, which is required to obtain fire-resistance rating indicated. Protect remaining fire-resistive materials from damage.

3.3 INSTALLATION

A. General: Install gypsum board shaft wall assemblies to comply with requirements of fire-resistance-rated assemblies indicated and manufacturer's written installation instructions.

B. Do not bridge building expansion joints with shaft wall assemblies; frame both sides of expansion joints with furring and other support.

C. Install supplementary framing in gypsum board shaft wall assemblies around openings and as required for blocking, bracing, and support of gravity and pullout loads of fixtures, equipment, services, heavy trim, furnishings, wall-mounted door stops, and similar items that cannot be supported directly by shaft wall assembly framing.

1. Reinforcing: Provide where items attach directly to shaft wall assembly as indicated on Drawings; accurately position and secure behind at least one layer of face panel.

D. Penetrations: At penetrations in shaft wall, maintain fire-resistance rating of shaft wall assembly by installing supplementary steel framing around perimeter of penetration and fire protection behind boxes containing wiring devices, elevator call buttons and floor indicators, and similar items.

E. Isolate perimeter of gypsum panels from building structure to prevent cracking of panels while maintaining continuity of fire-rated construction.

F. Firestop Tracks: Where indicated, install to maintain continuity of fire-resistance-rated assembly indicated.

G. Control Joints: Install control joints according to ASTM C 840 and in specific locations approved by Architect while maintaining fire-resistance rating of gypsum board shaft wall assemblies.

H. Installation Tolerance: Install each framing member so fastening surfaces vary not more than 1/8 inch (3 mm) from the plane formed by faces of adjacent framing.

3.4 PROTECTION

A. Protect installed products from damage from weather, condensation, direct sunlight, construction, and other causes during remainder of the construction period.

B. Remove and replace panels that are wet, moisture damaged, or mold damaged.

1. Indications that panels are wet or moisture damaged include, but are not limited to, discoloration, sagging, and irregular shape.
2. Indications that panels are mold damaged include, but are not limited to, fuzzy or splotchy surface contamination and discoloration.

END OF SECTION 092116.23

SECTION 092216 - NON-STRUCTURAL METAL FRAMING

PART 1 - GENERAL

1.1 RELATED DOCUMENTS

A. Drawings and general provisions of the Contract, including General and Supplementary Conditions and Division 01 Specification Sections, apply to this Section.

1.2 SUMMARY

A. Section Includes:

1. Non-load-bearing steel framing systems for interior partitions.
2. Suspension systems for interior ceilings and soffits.
3. Grid suspension systems for gypsum board ceilings.

B. Related Requirements:

1. Section 054000 "Cold-Formed Metal Framing" for exterior and interior load-bearing and exterior non-load-bearing wall studs; floor joists; roof rafters and ceiling joists; and roof trusses.

1.3 ACTION SUBMITTALS

A. Product Data: For each type of product.

1.4 INFORMATIONAL SUBMITTALS

A. Product Certificates: For each type of code-compliance certification for studs and tracks.

B. Evaluation Reports: For embossed steel studs and tracks, firestop tracks, post-installed anchors, and power-actuated fasteners, from ICC-ES or other qualified testing agency acceptable to authorities having jurisdiction.

PART 2 - PRODUCTS

2.1 PERFORMANCE REQUIREMENTS

A. Fire-Test-Response Characteristics: For fire-resistance-rated assemblies that incorporate non-load-bearing steel framing, provide materials and construction identical to those tested in assembly indicated, according to ASTM E 119 by an independent testing agency.

B. STC-Rated Assemblies: For STC-rated assemblies, provide materials and construction identical to those tested in assembly indicated on Drawings, according to ASTM E 90 and classified according to ASTM E 413 by an independent testing agency.

C. Horizontal Deflection: For wall assemblies, limited to 1/240 of the wall height based on horizontal loading of 5 lbf/sq. ft. (239 Pa).

2.2 FRAMING SYSTEMS

A. Framing Members, General: Comply with ASTM C 754 for conditions indicated.

1. Steel Sheet Components: Comply with ASTM C 645 requirements for metal unless otherwise indicated.
2. Protective Coating: Coating with equivalent corrosion resistance of ASTM A 653/A 653M, G40 (Z120), hot-dip galvanized unless otherwise indicated.

B. Studs and Tracks: ASTM C 645.

1. Steel Studs and Tracks:

a. Minimum Base-Metal Thickness: 0.0359 inch (0.912 mm).
b. Depth: As indicated on Drawings.

C. Slip-Type Head Joints: Where indicated, provide one of the following:

1. Double-Track System: ASTM C 645 top outer tracks, inside track with 2-inch- (51-mm-) deep flanges in thickness not less than indicated for studs and fastened to studs, and outer track sized to friction-fit over inner track.
2. Deflection Track: Steel sheet top track manufactured to prevent cracking of finishes applied to interior partition framing resulting from deflection of structure above; in thickness not less than indicated for studs and in width to accommodate depth of studs.

D. Firestop Tracks: Top track manufactured to allow partition heads to expand and contract with movement of structure while maintaining continuity of fire-resistance-rated assembly indicated; in thickness not less than indicated for studs and in width to accommodate depth of studs.

E. Flat Strap and Backing Plate: Steel sheet for blocking and bracing in length and width indicated.

1. Minimum Base-Metal Thickness: 0.0329 inch (0.836 mm).

F. Cold-Rolled Channel Bridging: Steel, 0.0538-inch (1.367-mm) minimum base-metal thickness, with minimum 1/2-inch- (13-mm-) wide flanges.

1. Depth: 1-1/2 inches (38 mm).
2. Clip Angle: Not less than 1-1/2 by 1-1/2 inches (38 by 38 mm), 0.068-inch- (1.72-mm-) thick, galvanized steel.

G. Hat-Shaped, Rigid Furring Channels: ASTM C 645.

1. Minimum Base-Metal Thickness: 0.0329 inch (0.836 mm).
2. Depth: As indicated on Drawings.

H. Resilient Furring Channels: 1/2-inch- (13-mm-) deep, steel sheet members designed to reduce sound transmission.

1. Configuration: Asymmetrical.

I. Cold-Rolled Furring Channels: 0.053-inch (1.34-mm) uncoated-steel thickness, with minimum 1/2-inch- (13-mm-) wide flanges.

1. Depth: 3/4 inch (19 mm).
2. Furring Brackets: Adjustable, corrugated-edge-type steel sheet with minimum uncoated-steel thickness of 0.0329 inch (0.8 mm).
3. Tie Wire: ASTM A 641/A 641M, Class 1 zinc coating, soft temper, 0.062-inch- (1.59-mm-) diameter wire, or double strand of 0.048-inch- (1.21-mm-) diameter wire.

2.3 SUSPENSION SYSTEMS

A. Tie Wire: ASTM A 641/A 641M, Class 1 zinc coating, soft temper, 0.062-inch- (1.59-mm-) diameter wire, or double strand of 0.048-inch- (1.21-mm-) diameter wire.

B. Wire Hangers: ASTM A 641/A 641M, Class 1 zinc coating, soft temper, 0.16 inch (4.12 mm) in diameter.

C. Grid Suspension System for Gypsum Board Ceilings: ASTM C 645, direct-hung system composed of main beams and cross-furring members that interlock.

1. Products: Subject to compliance with requirements, provide one of the following:

a. Armstrong World Industries, Inc; Drywall Grid Systems.
b. Chicago Metallic Corporation; 640/660 Drywall Ceiling Suspension.
c. USG Corporation; Drywall Suspension System.

2.4 AUXILIARY MATERIALS

A. General: Provide auxiliary materials that comply with referenced installation standards.

1. Fasteners for Steel Framing: Of type, material, size, corrosion resistance, holding power, and other properties required to fasten steel members to substrates.

B. Isolation Strip at Exterior Walls: Provide one of the following:

1. Asphalt-Saturated Organic Felt: ASTM D 226/D 226M, Type I (No. 15 asphalt felt), nonperforated.
2. Foam Gasket: Adhesive-backed, closed-cell vinyl foam strips that allow fastener penetration without foam displacement, 1/8 inch (3.2 mm) thick, in width to suit steel stud size.

PART 3 - EXECUTION

3.1 EXAMINATION

A. Examine areas and substrates, with Installer present, and including welded hollow-metal frames, cast-in anchors, and structural framing, for compliance with requirements and other conditions affecting performance of the Work.

B. Proceed with installation only after unsatisfactory conditions have been corrected.

3.2 PREPARATION

A. Suspended Assemblies: Coordinate installation of suspension systems with installation of overhead structure to ensure that inserts and other provisions for anchorages to building structure have been installed to receive hangers at spacing required to support the Work and that hangers will develop their full strength.

1. Furnish concrete inserts and other devices indicated to other trades for installation in advance of time needed for coordination and construction.

B. Coordination with Sprayed Fire-Resistive Materials:

1. Before sprayed fire-resistive materials are applied, attach offset anchor plates or ceiling tracks to surfaces indicated to receive sprayed fire-resistive materials. Where offset anchor plates are required, provide continuous plates fastened to building structure not more than 24 inches (610 mm) o.c.
2. After sprayed fire-resistive materials are applied, remove them only to extent necessary for installation of non-load-bearing steel framing. Do not reduce thickness of fire-resistive materials below that are required for fire-resistance ratings indicated. Protect adjacent fire-resistive materials from damage.

3.3 INSTALLATION, GENERAL

A. Installation Standard: ASTM C 754.

1. Gypsum Board Assemblies: Also comply with requirements in ASTM C 840 that apply to framing installation.

B. Install framing and accessories plumb, square, and true to line, with connections securely fastened.

C. Install supplementary framing, and blocking to support fixtures, equipment services, heavy trim, grab bars, toilet accessories, furnishings, or similar construction.

D. Install bracing at terminations in assemblies.

E. Do not bridge building control and expansion joints with non-load-bearing steel framing members. Frame both sides of joints independently.

3.4 INSTALLING FRAMED ASSEMBLIES

A. Install framing system components according to spacings indicated, but not greater than spacings required by referenced installation standards for assembly types.

1. Single-Layer Application: 16 inches (406 mm) o.c. unless otherwise indicated.
2. Multilayer Application: 16 inches (406 mm) o.c. unless otherwise indicated.
3. Tile Backing Panels: 16 inches (406 mm) o.c. unless otherwise indicated.

B. Where studs are installed directly against exterior masonry walls or dissimilar metals at exterior walls, install isolation strip between studs and exterior wall.

C. Install studs so flanges within framing system point in same direction.

D. Install tracks at floors and overhead supports. Extend framing full height to structural supports or substrates above suspended ceilings except where partitions are indicated to terminate at suspended ceilings. Continue framing around ducts that penetrate partitions above ceiling.

1. Slip-Type Head Joints: Where framing extends to overhead structural supports, install to produce joints at tops of framing systems that prevent axial loading of finished assemblies.
2. Door Openings: Screw vertical studs at jambs to jamb anchor clips on door frames; install track section (for cripple studs) at head and secure to jamb studs.

    a. Install two studs at each jamb unless otherwise indicated.
    b. Install cripple studs at head adjacent to each jamb stud, with a minimum 1/2-inch (13-mm) clearance from jamb stud to allow for installation of control joint in finished assembly.
    c. Extend jamb studs through suspended ceilings and attach to underside of overhead structure.

3. Other Framed Openings: Frame openings other than door openings the same as required for door openings unless otherwise indicated. Install framing below sills of openings to match framing required above door heads.
4. Fire-Resistance-Rated Partitions: Install framing to comply with fire-resistance-rated assembly indicated and support closures and to make partitions continuous from floor to underside of solid structure.

    a. Firestop Track: Where indicated, install to maintain continuity of fire-resistance-rated assembly indicated.

5. Sound-Rated Partitions: Install framing to comply with sound-rated assembly indicated.
6. Curved Partitions:

    a. Bend track to uniform curve and locate straight lengths so they are tangent to arcs.
    b. Begin and end each arc with a stud, and space intermediate studs equally along arcs. On straight lengths of no fewer than two studs at ends of arcs, place studs 6 inches (150 mm) o.c.

E. Direct Furring:

1. Attach to concrete or masonry with stub nails, screws designed for masonry attachment, or powder-driven fasteners spaced 24 inches (610 mm) o.c.

F. Installation Tolerance: Install each framing member so fastening surfaces vary not more than 1/8 inch (3 mm) from the plane formed by faces of adjacent framing.

3.5 INSTALLING CEILING SUSPENSION SYSTEMS

A. Install suspension system components according to spacings indicated, but not greater than spacings required by referenced installation standards for assembly types.

1. Hangers: 48 inches (1219 mm) o.c.

B. Isolate suspension systems from building structure where they abut or are penetrated by building structure to prevent transfer of loading imposed by structural movement.

C. Suspend hangers from building structure as follows:

1. Install hangers plumb and free from contact with insulation or other objects within ceiling plenum that are not part of supporting structural or suspension system.

    a. Splay hangers only where required to miss obstructions and offset resulting horizontal forces by bracing, countersplaying, or other equally effective means.

2. Where width of ducts and other construction within ceiling plenum produces hanger spacings that interfere with locations of hangers required to support standard suspension system members, install supplemental suspension members and hangers in the form of trapezes or equivalent devices.

    a. Size supplemental suspension members and hangers to support ceiling loads within performance limits established by referenced installation standards.

3. Wire Hangers: Secure by looping and wire tying, either directly to structures or to inserts, eye screws, or other devices and fasteners that are secure and appropriate for substrate, and in a manner that will not cause hangers to deteriorate or otherwise fail.
4. Flat Hangers: Secure to structure, including intermediate framing members, by attaching to inserts, eye screws, or other devices and fasteners that are secure and appropriate for structure and hanger, and in a manner that will not cause hangers to deteriorate or otherwise fail.
5. Do not attach hangers to steel roof deck.
6. Do not attach hangers to permanent metal forms. Furnish cast-in-place hanger inserts that extend through forms.
7. Do not attach hangers to rolled-in hanger tabs of composite steel floor deck.
8. Do not connect or suspend steel framing from ducts, pipes, or conduit.

D. Grid Suspension Systems: Attach perimeter wall track or angle where grid suspension systems meet vertical surfaces. Mechanically join main beam and cross-furring members to each other and butt-cut to fit into wall track.

E. Installation Tolerances: Install suspension systems that are level to within 1/8 inch in 12 feet (3 mm in 3.6 m) measured lengthwise on each member that will receive finishes and transversely between parallel members that will receive finishes.

3.6 NON-STRUCTURAL METAL FRAMING SCHEDULE

A. Provide interior non-structural metal framing in thicknesses to comply with manufacturer’s limiting height tables for 5 pounds per square foot loading, L/240 deflection, and partition height, but not less than the following:

1. Space framing 16 inches on center unless otherwise noted.
2. Framing 3-5/8 inches thick

    a. Less than 15 feet 6 inches high: 20 gage.
    b. Great than 15 feet 6 inches high: Provide cold-form metal framing.

3. Framing 6 inches thick

    a. Less than 23 feet high: 20 gage.
    b. Great than 23 feet high: Provide cold-form metal framing.

END OF SECTION 092216

SECTION 092900 - GYPSUM BOARD

PART 1 - GENERAL

1.1 RELATED DOCUMENTS

A. Drawings and general provisions of the Contract, including General and Supplementary Conditions and Division 01 Specification Sections, apply to this Section.

1.2 SUMMARY

A. Section Includes:

1. Interior gypsum board.
2. Texture finishes.

B. Related Requirements:

1. Section 061600 "Sheathing" for gypsum sheathing for exterior walls.
2. Section 092116.23 "Gypsum Board Shaft Wall Assemblies" for metal shaft-wall framing, gypsum shaft liners, and other components of shaft-wall assemblies.
3. Section 092216 "Non-Structural Metal Framing" for non-structural steel framing and suspension systems that support gypsum board panels.
4. Section 093013 "Ceramic Tiling" for cementitious backer units installed as substrates for ceramic tile.

1.3 ACTION SUBMITTALS

A. Product Data: For each type of product.

B. Samples: For the following products:

1. Trim Accessories: Full-size Sample in 12-inch- (300-mm-) long length for each trim accessory indicated.

1.4 DELIVERY, STORAGE AND HANDLING

A. Store materials inside under cover and keep them dry and protected against weather, condensation, direct sunlight, construction traffic, and other potential causes of damage. Stack panels flat and supported on risers on a flat platform to prevent sagging.

1.5 FIELD CONDITIONS

A. Environmental Limitations: Comply with ASTM C 840 requirements or gypsum board manufacturer's written instructions, whichever are more stringent.

B. Do not install paper-faced gypsum panels until installation areas are enclosed and conditioned.

C. Do not install panels that are wet, moisture damaged, and mold damaged.

1. Indications that panels are wet or moisture damaged include, but are not limited to, discoloration, sagging, or irregular shape.
2. Indications that panels are mold damaged include, but are not limited to, fuzzy or splotchy surface contamination and discoloration.

PART 2 - PRODUCTS

2.1 PERFORMANCE REQUIREMENTS

A. Fire-Resistance-Rated Assemblies: For fire-resistance-rated assemblies, provide materials and construction identical to those tested in assembly indicated according to ASTM E 119 by an independent testing agency.

B. STC-Rated Assemblies: For STC-rated assemblies, provide materials and construction identical to those tested in assembly indicated according to ASTM E 90 and classified according to ASTM E 413 by an independent testing agency.

2.2 GYPSUM BOARD, GENERAL

A. Size: Provide maximum lengths and widths available that will minimize joints in each area and that correspond with support system indicated.

2.3 INTERIOR GYPSUM BOARD

A. Gypsum Board, Type X: ASTM C 1396/C 1396M.

1. Products: Subject to compliance with requirements, provide one of the following:

a. Georgia-Pacific Gypsum LLC; ToughRock Brand Fireguard X.
b. National Gypsum Company; Gold Bond Brand Fire-Shield Wallboard.
c. USG Corporation; USG Sheetrock® Brand Firecode® X Gypsum Panels.

2. Thickness: 5/8 inch (15.9 mm).
3. Long Edges: Tapered and featured (rounded or beveled) for prefilling.

B. Flexible Gypsum Board: ASTM C 1396/C 1396M. Manufactured to bend to fit radii and to be more flexible than standard regular-type gypsum board of same thickness.

1. Products: Subject to compliance with requirements, provide one of the following:

a. Georgia-Pacific Gypsum LLC; ToughRock Brand FlexRoc Gypsum Board.
b. National Gypsum Company; High Flex Brand Wallboard.
c. USG Corporation; USG Sheetrock® Brand Flexible Gypsum Panels.

2. Thickness: 1/4 inch (6.4 mm).
3. Long Edges: Tapered.

C. Abuse-Resistant Gypsum Board: ASTM C 1396/C 1396M gypsum board, tested according to ASTM C 1629/C 1629M.

1. Products: Subject to compliance with requirements, provide one of the following:

    a. Georgia-Pacific Gypsum LLC; ToughRock Brand Fireguard X Abuse-Resistant Gypsum Board.
    b. National Gypsum Company; Hi-Abuse Brand XP Fire-Shield Wallboard.
    c. USG Corporation; USG Sheetrock® Brand Mold Tough® Abuse-Resistant Firecode®.

2. Core: 5/8 inch (15.9 mm), Type X.
3. Surface Abrasion: ASTM C 1629/C 1629M, meets or exceeds Level 2 requirements.
4. Indentation: ASTM C 1629/C 1629M, meets or exceeds Level 1 requirements.
5. Soft-Body Impact: ASTM C 1629/C 1629M, meets or exceeds Level 1 requirements.
6. Long Edges: Tapered.
7. Mold Resistance: ASTM D 3273, score of 10 as rated according to ASTM D 3274.

D. Impact-Resistant Gypsum Board: ASTM C 1396/C 1396M gypsum board, tested according to ASTM C 1629/C 1629M.

1. Products: Subject to compliance with requirements, provide one of the following:

    a. Georgia-Pacific Gypsum LLC; DensArmor Plus Impact-Resistant Interior Panel.
    b. National Gypsum Company; Hi-Impact Brand XP Fire-Shield Wallboard.
    c. USG Corporation; USG Sheetrock® Brand Mold Tough® VHI (Very High Impact) Firecode® Core.

2. Core: 5/8 inch (15.9 mm), Type X.
3. Surface Abrasion: ASTM C 1629/C 1629M, meets or exceeds Level 3 requirements.
4. Indentation: ASTM C 1629/C 1629M, meets or exceeds Level 1 requirements.
5. Soft-Body Impact: ASTM C 1629/C 1629M, meets or exceeds Level 3 requirements.
6. Hard-Body Impact: ASTM C 1629/C 1629M, meets or exceeds Level 2 requirements according to test in Annex A1.
7. Long Edges: Tapered.
8. Mold Resistance: ASTM D 3273, score of 10 as rated according to ASTM D 3274.

E. Mold-Resistant Gypsum Board: ASTM C 1396/C 1396M. With moisture- and mold-resistant core and paper surfaces.

1. Products: Subject to compliance with requirements, provide one of the following:

    a. Georgia-Pacific Gypsum LLC; ToughRock Brand Mold-Guard Gypsum Board.
    b. National Gypsum Company; Gold Bond Brand XP Wallboard.
    c. USG Corporation; USG Sheetrock® Brand Mold Tough® Firecode® X Panels.

2. Core: 5/8 inch (15.9 mm), Type X.
3. Long Edges: Tapered.
4. Mold Resistance: ASTM D 3273, score of 10 as rated according to ASTM D 3274.

2.4 SPECIALTY GYPSUM BOARD

A. Gypsum Board, Type C: ASTM C 1396/C 1396M. Manufactured to have increased fire-resistive capability.

1. Products: Subject to compliance with requirements, provide one of the following:

    a. Georgia-Pacific Gypsum LLC; Fireguard C.

b. National Gypsum Company; Gold Bond Fire-Shield C.
c. USG Corporation; USG Sheetrock® Brand Firecode® C Gypsum Panels.

2. Thickness: As required by fire-resistance-rated assembly indicated on Drawings.
3. Long Edges: Tapered.

2.5 TRIM ACCESSORIES

A. Interior Trim: ASTM C 1047.

1. Material: Galvanized or aluminum-coated steel sheet or rolled zinc.
2. Shapes:

a. Cornerbead.
b. LC-Bead: J-shaped; exposed long flange receives joint compound.
c. L-Bead: L-shaped; exposed long flange receives joint compound.
d. U-Bead: J-shaped; exposed short flange does not receive joint compound.
e. Expansion (control) joint.

B. Aluminum Trim: Extruded accessories of profiles and dimensions indicated.

1. Manufacturers: Subject to compliance with requirements, provide products by one of the following:

a. Flannery, Inc.
b. Fry Reglet Corporation.
c. Gordon, Inc.
d. Pittcon Industries.

2. Aluminum: Alloy and temper with not less than the strength and durability properties of ASTM B 221 (ASTM B 221M), Alloy 6063-T5.
3. Finish: Class II anodic finish.

2.6 JOINT TREATMENT MATERIALS

A. General: Comply with ASTM C 475/C 475M.

B. Joint Tape:

1. Interior Gypsum Board: Paper.

C. Joint Compound for Interior Gypsum Board: For each coat, use formulation that is compatible with other compounds applied on previous or for successive coats.

1. Prefilling: At open joints, rounded or beveled panel edges, and damaged surface areas, use setting-type taping compound.
2. Embedding and First Coat: For embedding tape and first coat on joints, fasteners, and trim flanges, use drying-type, all-purpose compound.

a. Use setting-type compound for installing paper-faced metal trim accessories.

3. Fill Coat: For second coat, use drying-type, all-purpose compound.
4. Finish Coat: For third coat, use drying-type, all-purpose compound.

5. Skim Coat: For final coat of Level 5 finish, use drying-type, all-purpose compound.

2.7 AUXILIARY MATERIALS

A. General: Provide auxiliary materials that comply with referenced installation standards and manufacturer's written instructions.

B. Laminating Adhesive: Adhesive or joint compound recommended for directly adhering gypsum panels to continuous substrate.

C. Steel Drill Screws: ASTM C 1002 unless otherwise indicated.

1. Use screws complying with ASTM C 954 for fastening panels to steel members from 0.033 to 0.112 inch (0.84 to 2.84 mm) thick.
2. For fastening cementitious backer units, use screws of type and size recommended by panel manufacturer.

D. Sound-Attenuation Blankets: ASTM C 665, Type I (blankets without membrane facing) produced by combining thermosetting resins with mineral fibers manufactured from glass, slag wool, or rock wool.

1. Fire-Resistance-Rated Assemblies: Comply with mineral-fiber requirements of assembly.

E. Acoustical Sealant: Manufacturer's standard nonsag, paintable, nonstaining latex sealant complying with ASTM C 834. Product effectively reduces airborne sound transmission through perimeter joints and openings in building construction as demonstrated by testing representative assemblies according to ASTM E 90.

F. Thermal Insulation: As specified in Section 072100 "Thermal Insulation."

PART 3 - EXECUTION

3.1 EXAMINATION

A. Examine areas and substrates including welded hollow-metal frames and support framing, with Installer present, for compliance with requirements and other conditions affecting performance of the Work.

B. Examine panels before installation. Reject panels that are wet, moisture damaged, and mold damaged.

C. Proceed with installation only after unsatisfactory conditions have been corrected.

3.2 APPLYING AND FINISHING PANELS, GENERAL

A. Comply with ASTM C 840.

B. Install ceiling panels across framing to minimize the number of abutting end joints and to avoid abutting end joints in central area of each ceiling. Stagger abutting end joints of adjacent panels not less than one framing member.

C. Install panels with face side out. Butt panels together for a light contact at edges and ends with not more than 1/16 inch (1.5 mm) of open space between panels. Do not force into place.

D. Locate edge and end joints over supports, except in ceiling applications where intermediate supports or gypsum board back-blocking is provided behind end joints. Do not place tapered edges against cut edges or ends. Stagger vertical joints on opposite sides of partitions. Do not make joints other than control joints at corners of framed openings.

E. Form control and expansion joints with space between edges of adjoining gypsum panels.

F. Cover both faces of support framing with gypsum panels in concealed spaces (above ceilings, etc.), except in chases braced internally.

1. Unless concealed application is indicated or required for sound, fire, air, or smoke ratings, coverage may be accomplished with scraps of not less than 8 sq. ft. (0.7 sq. m) in area.
2. Fit gypsum panels around ducts, pipes, and conduits.
3. Where partitions intersect structural members projecting below underside of floor/roof slabs and decks, cut gypsum panels to fit profile formed by structural members; allow 1/4- to 3/8-inch- (6.4- to 9.5-mm-) wide joints to install sealant.

G. Isolate perimeter of gypsum board applied to non-load-bearing partitions at structural abutments. Provide 1/4- to 1/2-inch- (6.4- to 12.7-mm-) wide spaces at these locations and trim edges with edge trim where edges of panels are exposed. Seal joints between edges and abutting structural surfaces with acoustical sealant.

H. Attachment to Steel Framing: Attach panels so leading edge or end of each panel is attached to open (unsupported) edges of stud flanges first.

I. STC-Rated Assemblies: Seal construction at perimeters, behind control joints, and at openings and penetrations with a continuous bead of acoustical sealant. Install acoustical sealant at both faces of partitions at perimeters and through penetrations. Comply with ASTM C 919 and with manufacturer's written instructions for locating edge trim and closing off sound-flanking paths around or through assemblies, including sealing partitions above acoustical ceilings.

J. Install sound attenuation blankets before installing gypsum panels unless blankets are readily installed after panels have been installed on one side.

3.3 APPLYING INTERIOR GYPSUM BOARD

A. Install interior gypsum board in the following locations:

1. Type X: Vertical surfaces unless otherwise indicated.
2. Flexible Type: Apply in double layer at curved assemblies.
3. Abuse-Resistant Type: Vertical surfaces in corridors less than 10 feet above finished floor, and as indicated on Drawings.
4. Impact-Resistant Type: As indicated on Drawings.
5. Mold-Resistant Type: As indicated on Drawings.
6. Type C: Where required for specific fire-resistance-rated assembly indicated.

B. Single-Layer Application:

1. On ceilings, apply gypsum panels before wall/partition board application to greatest extent possible and at right angles to framing unless otherwise indicated.
2. On partitions/walls, apply gypsum panels horizontally (perpendicular to framing) unless otherwise indicated or required by fire-resistance-rated assembly, and minimize end joints.

a. Stagger abutting end joints not less than one framing member in alternate courses of panels.
b. At stairwells and other high walls, install panels horizontally unless otherwise indicated or required by fire-resistance-rated assembly.

3. On Z-shaped furring members, apply gypsum panels vertically (parallel to framing) with no end joints. Locate edge joints over furring members.
4. Fastening Methods: Apply gypsum panels to supports with steel drill screws.

C. Multilayer Application:

1. On ceilings, apply gypsum board indicated for base layers before applying base layers on walls/partitions; apply face layers in same sequence. Apply base layers at right angles to framing members and offset face-layer joints one framing member, 16 inches (400 mm) minimum, from parallel base-layer joints, unless otherwise indicated or required by fire-resistance-rated assembly.
2. On partitions/walls, apply gypsum board indicated for base layers and face layers vertically (parallel to framing) with joints of base layers located over stud or furring member and face-layer joints offset at least one stud or furring member with base-layer joints unless otherwise indicated or required by fire-resistance-rated assembly. Stagger joints on opposite sides of partitions.
3. Fastening Methods: Fasten base layers and face layers separately to supports with screws.

D. Laminating to Substrate: Where gypsum panels are indicated as directly adhered to a substrate (other than studs, joists, furring members, or base layer of gypsum board), comply with gypsum board manufacturer's written instructions and temporarily brace or fasten gypsum panels until fastening adhesive has set.

E. Curved Surfaces:

1. Install panels horizontally (perpendicular to supports) and unbroken, to extent possible, across curved surface plus 12-inch- (300-mm-) long straight sections at ends of curves and tangent to them.
2. For double-layer construction, fasten base layer to studs with screws 16 inches (400 mm) o.c. Center gypsum board face layer over joints in base layer, and fasten to studs with screws spaced 12 inches (300 mm) o.c.

3.4 INSTALLING TRIM ACCESSORIES

A. General: For trim with back flanges intended for fasteners, attach to framing with same fasteners used for panels. Otherwise, attach trim according to manufacturer's written instructions.

B. Control Joints: Install control joints [at locations indicated on Drawings] [according to ASTM C 840 and in specific locations approved by Architect for visual effect].

C. Interior Trim: Install in the following locations:

1. Cornerbead: Use at outside corners unless otherwise indicated.
2. LC-Bead: Use at exposed panel edges.
3. L-Bead: Use where indicated.
4. U-Bead: Use where indicated.

D. Aluminum Trim: Install in locations indicated on Drawings.

3.5 FINISHING GYPSUM BOARD

A. General: Treat gypsum board joints, interior angles, edge trim, control joints, penetrations, fastener heads, surface defects, and elsewhere as required to prepare gypsum board surfaces for decoration. Promptly remove residual joint compound from adjacent surfaces.

B. Prefill open joints and damaged surface areas.

C. Apply joint tape over gypsum board joints, except for trim products specifically indicated as not intended to receive tape.

D. Gypsum Board Finish Levels: Finish panels to levels indicated below and according to ASTM C 840:

1. Level 1: Ceiling plenum areas, concealed areas, and where indicated.
2. Level 4: At panel surfaces that will be exposed to view unless otherwise indicated.

    a. Primer and its application to surfaces are specified in Section 099123 "Interior Painting."

3. Level 5: Where indicated on Drawings, and at Lobbies.

    a. Primer and its application to surfaces are specified in Section 099123 "Interior Painting."

3.6 PROTECTION

A. Protect adjacent surfaces from drywall compound and promptly remove from floors and other non-drywall surfaces. Repair surfaces stained, marred, or otherwise damaged during drywall application.

B. Protect installed products from damage from weather, condensation, direct sunlight, construction, and other causes during remainder of the construction period.

C. Remove and replace panels that are wet, moisture damaged, and mold damaged.

1. Indications that panels are wet or moisture damaged include, but are not limited to, discoloration, sagging, or irregular shape.
2. Indications that panels are mold damaged include, but are not limited to, fuzzy or splotchy surface contamination and discoloration.

END OF SECTION 092900

SECTION 095113 - ACOUSTICAL PANEL CEILINGS

PART 1 - GENERAL

1.1 RELATED DOCUMENTS

A. Drawings and general provisions of the Contract, including General and Supplementary Conditions and Division 01 Specification Sections, apply to this Section.

1.2 SUMMARY

A. Section includes acoustical panels and exposed suspension systems for interior ceilings.

1.3 ACTION SUBMITTALS

A. Product Data: For each type of product.

B. Samples: For each exposed product and for each color and texture specified, 6 inches (150 mm) in size.

C. Samples for Initial Selection: For components with factory-applied finishes.

D. Samples for Verification: For each component indicated and for each exposed finish required, prepared on Samples of sizes indicated below:

1. Acoustical Panels: Set of 6-inch- (150-mm-) square Samples of each type, color, pattern, and texture.
2. Exposed Suspension-System Members, Moldings, and Trim: Set of 6-inch- (150-mm-) long Samples of each type, finish, and color.
3. Clips: Full-size hold-down clips.

1.4 INFORMATIONAL SUBMITTALS

A. Evaluation Reports: For each acoustical panel ceiling suspension system and anchor and fastener type, from ICC-ES.

1.5 CLOSEOUT SUBMITTALS

A. Maintenance Data: For finishes to include in maintenance manuals.

1.6 MAINTENANCE MATERIAL SUBMITTALS

A. Furnish extra materials, from the same product run, that match products installed and that are packaged with protective covering for storage and identified with labels describing contents.

1. Acoustical Ceiling Units: Full-size panels equal to 2 percent of quantity installed.
2. Suspension-System Components: Quantity of each exposed component equal to 2 percent of quantity installed.

3. Hold-Down Clips: Equal to 2 percent of quantity installed.

1.7 DELIVERY, STORAGE, AND HANDLING

A. Deliver acoustical panels, suspension-system components, and accessories to Project site and store them in a fully enclosed, conditioned space where they will be protected against damage from moisture, humidity, temperature extremes, direct sunlight, surface contamination, and other causes.

B. Before installing acoustical panels, permit them to reach room temperature and a stabilized moisture content.

1.8 FIELD CONDITIONS

A. Environmental Limitations: Do not install acoustical panel ceilings until spaces are enclosed and weathertight, wet-work in spaces is complete and dry, work above ceilings is complete, and ambient temperature and humidity conditions are maintained at the levels indicated for Project when occupied for its intended use.

1. Pressurized Plenums: Operate ventilation system for not less than 48 hours before beginning acoustical panel ceiling installation.

PART 2 - PRODUCTS

2.1 MANUFACTURERS

A. Source Limitations: Obtain each type of acoustical ceiling panel and its supporting suspension system from single source from single manufacturer.

2.2 PERFORMANCE REQUIREMENTS

A. Surface-Burning Characteristics: Comply with ASTM E 84; testing by a qualified testing agency. Identify products with appropriate markings of applicable testing agency.

1. Flame-Spread Index: Class B according to ASTM E 1264.
2. Smoke-Developed Index: 450 or less.

B. Fire-Resistance Ratings: Comply with ASTM E 119; testing by a qualified testing agency. Identify products with appropriate markings of applicable testing agency.

1. Indicate design designations from UL or from the listings of another qualified testing agency.

2.3 ACOUSTICAL PANELS **ACT-1**

A. Basis-of-Design Product: Subject to compliance with requirements, provide Armstrong World Industries, Inc.; School Zone Finish Fissured #1714 or a comparable product by one of the following:

1. CertainTeed Corporation.
2. United States Gypsum Company.

B. Classification: Provide panels complying with ASTM E 1264 for type, form, and pattern as follows:

1. Type and Form: Type III, mineral base with painted finish; Form 2, water felted.
2. Pattern: CE (perforated, small holes and lightly textured).

C. Color: White.

D. LR: Not less than 0.85.

E. NRC: Not less than 0.70.

F. CAC: Not less than 35.

G. Edge/Joint Detail: Square.

H. Thickness: 3/4 inch (19 mm).

I. Modular Size: 24 by 48 inches (610 by 1220 mm).

J. Broad Spectrum Antimicrobial Fungicide and Bactericide Treatment: Provide acoustical panels treated with manufacturer's standard antimicrobial formulation that inhibits fungus, mold, mildew, and gram-positive and gram-negative bacteria and showing no mold, mildew, or bacterial growth when tested according to ASTM D 3273 and evaluated according to ASTM D 3274 or ASTM G 21.

2.4 ACOUSTICAL PANELS **ACT-2**

A. Basis-of-Design Product: Subject to compliance with requirements, provide Armstrong World Industries, Inc.; School Zone Finish Fissured #1713 or a comparable product by one of the following:

1. CertainTeed Corporation.
2. United States Gypsum Company.

B. Classification: Provide panels complying with ASTM E 1264 for type, form, and pattern as follows:

1. Type and Form: Type III, mineral base with painted finish; Form 2, water felted.
2. Pattern: CE (perforated, small holes and lightly textured).

C. Color: White.

D. LR: Not less than 0.85.

E. NRC: Not less than 0.70.

F. CAC: Not less than 35.

G. Edge/Joint Detail: Square.

H. Thickness: 3/4 inch (19 mm).

I. Modular Size: 24 by 24 inches (610 by 610 mm).

J. Broad Spectrum Antimicrobial Fungicide and Bactericide Treatment: Provide acoustical panels treated with manufacturer's standard antimicrobial formulation that inhibits fungus, mold, mildew, and gram-

positive and gram-negative bacteria and showing no mold, mildew, or bacterial growth when tested according to ASTM D 3273 and evaluated according to ASTM D 3274 or ASTM G 21.

2.5 ACOUSTICAL PANELS **ACT-3**

A. Basis-of-Design Product: Subject to compliance with requirements, provide Armstrong World Industries, Inc.; Ultima Health Zone 1935 or a comparable product by one of the following:

1. CertainTeed Corporation.
2. United States Gypsum Company.

B. Classification: Provide panels complying with ASTM E 1264 for type, form, and pattern as follows:

1. Type and Form: Type IV, mineral base with membrane-faced overlay; Form 2, water felted; with vinyl overlay on face.
2. Pattern: E (lightly textured).

C. Color: White.

D. LR: Not less than 0.85.

E. NRC: Not less than 0.70.

F. CAC: Not less than 35.

G. Edge/Joint Detail: Square.

H. Thickness: 3/4 inch (19 mm).

I. Modular Size: 24 by 24 inches (610 by 610 mm).

J. Broad Spectrum Antimicrobial Fungicide and Bactericide Treatment: Provide acoustical panels treated with manufacturer's standard antimicrobial formulation that inhibits fungus, mold, mildew, and gram-positive and gram-negative bacteria and showing no mold, mildew, or bacterial growth when tested according to ASTM D 3273 and evaluated according to ASTM D 3274 or ASTM G 21.

2.6 METAL SUSPENSION SYSTEM

A. Manufacturers: Subject to compliance with requirements, provide products by one of the following:

1. Armstrong World Industries, Inc.
2. CertainTeed Corporation.
3. Chicago Metallic Corporation.
4. USG Corporation.

B. Metal Suspension-System Standard: Provide manufacturer's standard, direct-hung, metal suspension system and accessories according to ASTM C 635/C 635M and designated by type, structural classification, and finish indicated.

1. High-Humidity Finish: Where indicated, provide coating tested and classified for "severe environment performance" according to ASTM C 635/C 635M.

C. Wide-Face, Capped, Double-Web, Steel Suspension System: Main and cross runners roll formed from cold-rolled steel sheet; prepainted, electrolytically zinc coated, or hot-dip galvanized, G30 (Z90) coating designation; with prefinished 15/16-inch- (24-mm-) wide metal caps on flanges.

1. Structural Classification: Intermediate-duty system.
2. End Condition of Cross Runners: Override (stepped) or butt-edge type.
3. Face Design: Flat, flush.
4. Cap Material: Cold-rolled steel.
5. Cap Finish: Painted white.
6. Locations: ACT-1, ACT-2, and ACT-3.

2.7 ACCESSORIES

A. Attachment Devices: Size for five times the design load indicated in ASTM C 635/C 635M, Table 1, "Direct Hung," unless otherwise indicated. Comply with seismic design requirements.

B. Wire Hangers, Braces, and Ties: Provide wires as follows:

1. Zinc-Coated, Carbon-Steel Wire: ASTM A 641/A 641M, Class 1 zinc coating, soft temper.
2. Stainless-Steel Wire: ASTM A 580/A 580M, Type 304, nonmagnetic.
3. Nickel-Copper-Alloy Wire: ASTM B 164, nickel-copper-alloy UNS No. N04400.
4. Size: Wire diameter sufficient for its stress at three times hanger design load (ASTM C 635/C 635M, Table 1, "Direct Hung") will be less than yield stress of wire, but not less than 0.106-inch- (2.69-mm-) diameter wire.

C. Hanger Rods: Mild steel, zinc coated or protected with rust-inhibitive paint.

D. Flat Hangers: Mild steel, zinc coated or protected with rust-inhibitive paint.

E. Angle Hangers: Angles with legs not less than 7/8 inch (22 mm) wide; formed with 0.04-inch- (1-mm-) thick, galvanized-steel sheet complying with ASTM A 653/A 653M, G90 (Z275) coating designation; with bolted connections and 5/16-inch- (8-mm-) diameter bolts.

F. Hold-Down Clips: Manufacturer's standard hold-down.

2.8 METAL EDGE MOLDINGS AND TRIM

A. Manufacturers: Subject to compliance with requirements, provide products by one of the following:

1. Armstrong World Industries, Inc.
2. CertainTeed Corporation.
3. Chicago Metallic Corporation.
4. USG Corporation.

B. Roll-Formed, Sheet-Metal Edge Moldings and Trim: Type and profile indicated or, if not indicated, manufacturer's standard moldings for edges and penetrations that comply with seismic design requirements; formed from sheet metal of same material, finish, and color as that used for exposed flanges of suspension-system runners.

1. Edge moldings shall fit acoustical panel edge details and suspension systems indicated and match width and configuration of exposed runners unless otherwise indicated.
2. For lay-in panels with reveal edge details, provide stepped edge molding that forms reveal of same depth and width as that formed between edge of panel and flange at exposed suspension member.

3. For circular penetrations of ceiling, provide edge moldings fabricated to diameter required to fit penetration exactly.

2.9 ACOUSTICAL SEALANT

A. Acoustical Sealant: As specified in Section 079219 "Acoustical Joint Sealants."

PART 3 - EXECUTION

3.1 EXAMINATION

A. Examine substrates, areas, and conditions, including structural framing to which acoustical panel ceilings attach or abut, with Installer present, for compliance with requirements specified in this and other Sections that affect ceiling installation and anchorage and with requirements for installation tolerances and other conditions affecting performance of acoustical panel ceilings.

B. Examine acoustical panels before installation. Reject acoustical panels that are wet, moisture damaged, or mold damaged.

C. Proceed with installation only after unsatisfactory conditions have been corrected.

3.2 PREPARATION

A. Measure each ceiling area and establish layout of acoustical panels to balance border widths at opposite edges of each ceiling. Avoid using less-than-half-width panels at borders unless otherwise indicated, and comply with layout shown on reflected ceiling plans.

B. Layout openings for penetrations centered on the penetrating items.

3.3 INSTALLATION

A. Install acoustical panel ceilings according to ASTM C 636/C 636M and manufacturer's written instructions.

B. Suspend ceiling hangers from building's structural members and as follows:

1. Install hangers plumb and free from contact with insulation or other objects within ceiling plenum that are not part of supporting structure or of ceiling suspension system.
2. Splay hangers only where required to miss obstructions; offset resulting horizontal forces by bracing, countersplaying, or other equally effective means.
3. Where width of ducts and other construction within ceiling plenum produces hanger spacings that interfere with location of hangers at spacings required to support standard suspension-system members, install supplemental suspension members and hangers in form of trapezes or equivalent devices.
4. Secure wire hangers to ceiling-suspension members and to supports above with a minimum of three tight turns. Connect hangers directly to structure or to inserts, eye screws, or other devices that are secure and appropriate for substrate and that will not deteriorate or otherwise fail due to age, corrosion, or elevated temperatures.
5. Secure flat, angle, channel, and rod hangers to structure, including intermediate framing members, by attaching to inserts, eye screws, or other devices that are secure and appropriate for both the

structure to which hangers are attached and the type of hanger involved. Install hangers in a manner that will not cause them to deteriorate or fail due to age, corrosion, or elevated temperatures.

6. Do not support ceilings directly from permanent metal forms or floor deck. Fasten hangers to cast-in-place hanger inserts, postinstalled mechanical or adhesive anchors, or power-actuated fasteners that extend through forms into concrete.
7. When steel framing does not permit installation of hanger wires at spacing required, install carrying channels or other supplemental support for attachment of hanger wires.
8. Do not attach hangers to steel deck tabs.
9. Do not attach hangers to steel roof deck. Attach hangers to structural members.
10. Space hangers not more than 48 inches (1200 mm) o.c. along each member supported directly from hangers unless otherwise indicated; provide hangers not more than 8 inches (200 mm) from ends of each member.
11. Size supplemental suspension members and hangers to support ceiling loads within performance limits established by referenced standards.

C. Secure bracing wires to ceiling suspension members and to supports with a minimum of four tight turns. Suspend bracing from building's structural members as required for hangers, without attaching to permanent metal forms, steel deck, or steel deck tabs. Fasten bracing wires into concrete with cast-in-place or postinstalled anchors.

D. Install edge moldings and trim of type indicated at perimeter of acoustical ceiling area and where necessary to conceal edges of acoustical panels.

1. Apply acoustical sealant in a continuous ribbon concealed on back of vertical legs of moldings before they are installed.
2. Screw attach moldings to substrate at intervals not more than 16 inches (400 mm) o.c. and not more than 3 inches (75 mm) from ends. Miter corners accurately and connect securely.
3. Do not use exposed fasteners, including pop rivets, on moldings and trim.

E. Install suspension-system runners so they are square and securely interlocked with one another. Remove and replace dented, bent, or kinked members.

F. Install acoustical panels with undamaged edges and fit accurately into suspension-system runners and edge moldings. Scribe and cut panels at borders and penetrations to provide precise fit.

1. Arrange directionally patterned acoustical panels as follows:

    a. As indicated on reflected ceiling plans.

2. For square-edged panels, install panels with edges fully hidden from view by flanges of suspension-system runners and moldings.
3. For reveal-edged panels on suspension-system runners, install panels with bottom of reveal in firm contact with top surface of runner flanges.
4. For reveal-edged panels on suspension-system members with box-shaped flanges, install panels with reveal surfaces in firm contact with suspension-system surfaces and panel faces flush with bottom face of runners.
5. Paint cut edges of panel remaining exposed after installation; match color of exposed panel surfaces using coating recommended in writing for this purpose by acoustical panel manufacturer.
6. Install hold-down clips in areas indicated; space according to panel manufacturer's written instructions unless otherwise indicated.

    a. Hold-Down Clips: Space 24 inches (610 mm) o.c. on all cross runners.
    b. Locations: Acoustical ceiling panels within 12 feet of doors opening directly to exterior.

7. Install clean-room gasket system in areas indicated, sealing each panel and fixture as recommended by panel manufacturer's written instructions.
8. Protect lighting fixtures and air ducts according to requirements indicated for fire-resistance-rated assembly.

3.4 ERECTION TOLERANCES

A. Suspended Ceilings: Install main and cross runners level to a tolerance of 1/8 inch in 12 feet (3 mm in 3.6 m), non-cumulative.

B. Moldings and Trim: Install moldings and trim to substrate and level with ceiling suspension system to a tolerance of 1/8 inch in 12 feet (3 mm in 3.6 m), non-cumulative.

3.5 CLEANING

A. Clean exposed surfaces of acoustical panel ceilings, including trim, edge moldings, and suspension-system members. Comply with manufacturer's written instructions for cleaning and touchup of minor finish damage.

B. Remove and replace ceiling components that cannot be successfully cleaned and repaired to permanently eliminate evidence of damage.

END OF SECTION 095113

SECTION 095443 - STRETCHED-FABRIC CEILING SYSTEMS

PART 1 - GENERAL

1.1 RELATED DOCUMENTS

A. Drawings and general provisions of the Contract, including General and Supplementary Conditions and Division 01 Specification Sections, apply to this Section.

1.2 SUMMARY

A. Section includes site-upholstered ceiling systems.

1.3 DEFINITIONS

A. NRC: Noise Reduction Coefficient.

B. SAA: Sound absorption average.

1.4 PREINSTALLATION MEETINGS

A. Preinstallation Conference: Conduct conference at Project site.

1.5 ACTION SUBMITTALS

A. Product Data: For each type of product.

1. Include fabric facing, frame edge and trim, core material, and mounting indicated.

B. Shop Drawings: For each stretched-fabric system.

1. Include reflected ceiling plans, elevations, sections, and installation and system details.
2. Include details at joints and corners; and details at ceiling intersections and intersections with walls. Indicate frame-edge profile and core materials.
3. Include details at cutouts and penetrations for other work.
4. Include direction of fabric weave and pattern matching.
5. Show sewn-seam locations, types, and methods.

C. Samples for Initial Selection: For each type of fabric facing.

1. Include Samples of accessories involving color or finish selection.

D. Samples for Verification: For the following products:

1. Fabric: Full-width by approximately 36-inch- (900-mm-) long Sample, but not smaller than required to show complete pattern repeat, from dye lot to be used for the Work, and with specified treatments applied. Mark top and face of fabric.
2. Frame System: 12-inch- (300-mm-) square Sample(s) showing each edge profile and corner.

3. Core Material: 12-inch- (300-mm-) square Sample at corner.
4. Assembled System: Approximately 36 by 36 inches (900 by 900 mm), including joints and seams in mockup.

1.6 INFORMATIONAL SUBMITTALS

A. Coordination Drawings: Reflected ceiling plans and other details, drawn to scale, on which the following items are shown and coordinated with each other, using input from installers of the items involved:

1. Electrical outlets.
2. Suspended ceiling components above stretched-fabric systems.
3. Structural members to which suspension devices will be attached.
4. Items penetrating or covered by stretched-fabric systems including the following:

a. Lighting fixtures.
b. Air outlets and inlets.
c. Speakers.
d. Alarms.
e. Sprinklers.
f. Access panels.

5. Show operation of hinged and sliding components covered by or adjacent to stretched-fabric systems.

B. Qualification Data: For Installer.

C. Product Certificates: For each type of stretched-fabric system.

1.7 CLOSEOUT SUBMITTALS

A. Maintenance Data: For stretched-fabric systems to include in maintenance manuals. Include fabric manufacturer's written cleaning, stain-removal, restretching, and reupholstering instructions.

1.8 MAINTENANCE MATERIAL SUBMITTALS

A. Furnish extra materials, from the same product run, that match products installed and that are packaged with protective covering for storage and identified with labels describing contents.

1. Fabric: For each fabric, color, and pattern installed, furnish length equal to 10 percent of amount installed, but no fewer than 10 sq. yd. (9 sq. m), full width of bolt.
2. Framing and Related Installation Items: Furnish manufacturer's full-length units equal to 5 percent of amount installed, but no fewer than 5 units, including unopened adhesives.

1.9 QUALITY ASSURANCE

A. Installer Qualifications: An authorized representative who is trained and approved by manufacturer.

B. Mockups: Build mockups to verify selections made under Sample submittals, to demonstrate aesthetic effects, and to set quality standards for materials, fabrication, and installation.

1. Build mockup of typical ceiling area 96 inches (2400 mm) wide by full width of ceiling. Include intersection of wall and ceiling, corners, and perimeters.
2. Approval of mockups does not constitute approval of deviations from the Contract Documents contained in mockups unless Architect specifically approves such deviations in writing.
3. Subject to compliance with requirements, approved mockups may become part of the completed Work if undisturbed at time of Substantial Completion.

1.10 DELIVERY, STORAGE, AND HANDLING

A. Comply with fabric and stretched-fabric system manufacturers' written instructions for minimum and maximum temperature and humidity requirements for shipment, storage, and handling.

B. Deliver materials in unopened bundles and store in a temperature-controlled dry place with adequate air circulation.

1.11 FIELD CONDITIONS

A. Environmental Limitations: Do not install stretched-fabric systems until spaces are enclosed and weathertight, wet-work in spaces is complete and dry, work at and above ceilings is complete, and ambient temperature and humidity conditions are maintained at the levels indicated for Project when occupied for its intended use.

B. Lighting: Do not install stretched-fabric systems until a permanent level of lighting is provided on surfaces to receive stretched-fabric systems.

C. Air-Quality Limitations: Protect stretched-fabric systems from exposure to airborne odors, such as tobacco smoke, and install systems under conditions free from odor contamination of ambient air.

1.12 WARRANTY

A. Special Warranty: Manufacturer and Installer agree to repair or replace components of stretched-fabric systems that fail in performance, materials, or workmanship within specified warranty period.

1. Failures include, but are not limited to, the following:

a. Acoustical performance.
b. Fabric sagging, distorting, or releasing from panel edge.
c. Warping of core.

2. Warranty Period: Five years from date of Substantial Completion.

PART 2 - PRODUCTS

2.1 MANUFACTURERS

A. Source Limitations: Obtain stretched-fabric ceiling systems specified in this Section from single source from single manufacturer.

2.2 PERFORMANCE REQUIREMENTS

A. Fire-Test-Response Characteristics: Stretched-fabric ceiling systems shall comply with "Surface-Burning Characteristics" or "Fire Growth Contribution" Subparagraph below, or both, as determined by testing identical products by UL or another testing and inspecting agency acceptable to authorities having jurisdiction:

1. Surface-Burning Characteristics: Comply with ASTM E 84 or UL 723; testing by a qualified testing agency on systems prepared according to ASTM E 2573. Identify products with appropriate markings of applicable testing agency.

   a. Flame-Spread Index: 75 or less.
   b. Smoke-Developed Index: 450 or less.

2. Fire Growth Contribution: Comply with acceptance criteria of local code and authorities having jurisdiction when tested according to NFPA 286.

2.3 STRETCHED-FABRIC CEILING SYSTEMS (**SFCS**)

A. Stretched-Fabric Ceiling System: Manufacturer's standard system consisting of facing material stretched tightly over a frame and core material and secured in the frame.

1. Manufacturers: Subject to compliance with requirements, provide products by one of the following:

   a. AFS.
   b. SoftWalls, Inc.
   c. Whisper Walls.

2. Core: Manufacturer's standard.

   a. Nominal Core Thickness: Match nominal frame thickness.

3. Core Overlay: Polyester batting 1/2 inch (13 mm) thick.
4. Frame Edge: Square profile.

   a. Nominal Frame Thickness: 1 inch (25 mm) to 2 inch (51 mm), as required by manufacturer.

5. Frame Color: Prepainted color as selected by Architect from full range of manufacturer's colors.
6. Reveals between Panels: Recessed reveals as selected by Architect from manufacturer's full range.
7. Facing Material: As indicated on Drawings.
8. Acoustical Performance: Sound absorption NRC of not less than 0.65 according to ASTM C 423 for Type A mounting according to ASTM E 795.
9. Nominal Overall System Thickness: Match nominal frame thickness.

2.4 MATERIALS

A. Core Materials: Manufacturer's standard.

1. Glass-Fiber Blanket: ASTM C 553, ASTM C 612, or ASTM C 665; of type standard with manufacturer; nominal density of 3 to 4 lb/cu. ft. (48 to 64 kg/cu. m); flexible; and with maximum flame-spread and smoke-developed indexes of 25 and 50, respectively.
2. Core Overlay: Flame-retardant, compressible, fiberfill, polyester batting.

B. Frame Construction: Manufacturer's standard, continuous, extruded plastic frame (track).

C. Facing Material: Fabric from same dye lot; color and pattern as selected by Architect from manufacturer's full range.

1. Basis-of-Design: Carnegie Fabrics, LLC; Nexus.
2. Color: As selected by Architect from manufacturer’s full range.
3. Lining Material: Manufacturer's standard fabric for each use indicated.

D. Lining Material: Fabric as selected by Architect from manufacturer's full range.

2.5 INSTALLATION MATERIALS

A. Installation Products: Concealed on back of system, recommended by stretched-fabric system manufacturer to support weight of system, fabric tension, and as follows:

1. Fasteners: Manufacturer's standard.

PART 3 - EXECUTION

3.1 EXAMINATION

A. Examine fabric, materials, substrates, areas, and conditions, with Installer present, for compliance with requirements, installation tolerances, and other conditions affecting performance of stretched-fabric systems.

B. Proceed with installation only after unsatisfactory conditions have been corrected.

3.2 PREPARATION

A. Measure each area and establish layout of panels and joints of uniform size with balanced borders at opposite edges within a given area.

B. Before installation, allow fabric to adjust and become stable in spaces where it will be installed according to stretched-fabric system manufacturer's written instructions. Acclimatize fabric for minimum of 24 hours at ambient temperature and humidity conditions indicated for spaces when occupied for their intended use.

3.3 INSTALLATION

A. Install stretched-fabric systems according to system manufacturer's written instructions.

1. Provide continuous perimeter frames of each profile indicated, designed to be inconspicuous when covered by fabric facing, with smooth edges, and with surface finish that will not telegraph through fabric facing.

2. Install framing around penetrations.
3. Tightly fit framing to adjacent construction and securely attach to substrate.
4. Install core material with full coverage, flush with face of stretched-fabric system frame.
5. Attach frame and core to substrate with adhesive or fasteners, or both, to support system and prevent deformation of components.
6. Install stretched-fabric systems true in plane and with fabric square to the grain.
7. Install jointed panels with butt joints and reveals as indicated.

B. Fabric Installation: Apply fabric monolithically in continuous run over area, without joints or reveals, except where panel joints or midspan frames are indicated.

1. Fabric Direction: Run fabric as indicated on approved shop drawings.
2. Fabric Sequence: Maintain sequence of fabric drops; match and level fabric pattern and grain.
3. Fabric Alignment: Install fabric with patterns or directional weaves so pattern or weave aligns with adjacent panels.
4. Fabric Seams: Sewn seams are not permitted unless specifically noted and approved on shop drawings.
5. Core Overlay: Evenly stretch over core face and edges; free from puckers, ripples, wrinkles, and sags.
6. Stretch and secure fabric to frame edges and so frame and frame attachment method are concealed by fabric unless otherwise indicated.
7. Stretch fabric tightly and square without puckers, ripples, or distortions. Acclimatize and restretch if recommended by stretched-fabric system manufacturer. Repair distortions, wrinkles, and sagging.
8. Trim Strip: Back-wrap trim strip fabric from the fabric-insertion point over the exposed part of the frame edge where indicated, resulting in a contrasting fabric along the edge.

3.4 INSTALLATION TOLERANCES

A. Edge Straightness: Plus or minus 1/16 inch (1.6 mm) in 48 inches (1200 mm).

B. Variation from Alignment with Surfaces: Plus or minus 1/16 inch (1.6 mm) in 48 inches (1200 mm), noncumulative.

C. Variation from Level or Slope: Plus or minus 1/16 inch (1.6 mm).

D. Variation of Joint Width: Not more than 1/16 inch (1.6 mm) in 48 inches (1200 mm) from hairline, noncumulative.

3.5 CLEANING

A. Clip loose threads; remove pills and extraneous materials.

B. Clean panels on completion of installation to remove dust and other foreign materials according to manufacturer's written instructions.

END OF SECTION 095443

SECTION 096513 - RESILIENT BASE AND ACCESSORIES

PART 1 - GENERAL

1.1 RELATED DOCUMENTS

A. Drawings and general provisions of the Contract, including General and Supplementary Conditions and Division 01 Specification Sections, apply to this Section.

1.2 SUMMARY

A. Section Includes:

1. Thermoplastic-rubber base.
2. Rubber stair accessories.
3. Rubber molding accessories.

1.3 ACTION SUBMITTALS

A. Product Data: For each type of product.

B. Samples for Initial Selection: For each type of product indicated.

C. Samples for Verification: For each type of product indicated and for each color, texture, and pattern required in manufacturer's standard-size Samples, but not less than 12 inches (300 mm) long.

1.4 MAINTENANCE MATERIAL SUBMITTALS

A. Furnish extra materials, from the same product run, that match products installed and that are packaged with protective covering for storage and identified with labels describing contents.

1. Furnish not less than 10 linear feet (3 linear m) for every 500 linear feet (150 linear m) or fraction thereof, of each type, color, pattern, and size of resilient product installed.

1.5 DELIVERY, STORAGE, AND HANDLING

A. Store resilient products and installation materials in dry spaces protected from the weather, with ambient temperatures maintained within range recommended by manufacturer, but not less than 50 deg F (10 deg C) or more than 90 deg F (32 deg C).

1.6 FIELD CONDITIONS

A. Maintain ambient temperatures within range recommended by manufacturer, but not less than 70 deg F (21 deg C) or more than 95 deg F (35 deg C), in spaces to receive resilient products during the following periods:

1. 48 hours before installation.

2. During installation.
3. 48 hours after installation.

B. After installation and until Substantial Completion, maintain ambient temperatures within range recommended by manufacturer, but not less than 55 deg F (13 deg C) or more than 95 deg F (35 deg C).

C. Install resilient products after other finishing operations, including painting, have been completed.

PART 2 - PRODUCTS

2.1 THERMOPLASTIC-RUBBER BASE ("**R**")

A. Manufacturers: Subject to compliance with requirements, provide products by one of the following:

1. Armstrong World Industries, Inc.
2. Burke Mercer Flooring Products; a division of Burke Industries Inc.
3. Johnsonite; a Tarkett company.
4. Roppe Corporation, USA.

B. Product Standard: ASTM F 1861, Type TP (rubber, thermoplastic).

1. Group: I (solid, homogeneous).
2. Style and Location:

a. Style B, Cove: Provide in areas with resilient floor coverings.

C. Thickness: 0.125 inch (3.2 mm).

D. Height: 4 inches (102 mm).

E. Lengths: Cut lengths 48 inches (1219 mm) long or coils in manufacturer's standard length.

F. Outside Corners: Job formed or preformed.

G. Inside Corners: Job formed.

H. Colors: Match Johnsonite; Skinny Dip #106.

2.2 RUBBER STAIR ACCESSORIES ("**RUB**")

A. Fire-Test-Response Characteristics: As determined by testing identical products according to ASTM E 648 or NFPA 253 by a qualified testing agency.

1. Critical Radiant Flux Classification: Class I, not less than 0.45 W/sq. cm.

B. Manufacturers: Subject to compliance with requirements, provide products by one of the following:

1. Armstrong World Industries, Inc.
2. Burke Mercer Flooring Products; a division of Burke Industries Inc.
3. Johnsonite; a Tarkett company.
4. Roppe Corporation, USA.

C. Stair Treads: ASTM F 2169.

1. Type: TS (rubber, vulcanized thermoset) or TP (rubber, thermoplastic).
2. Class: 2 (pattern; embossed, grooved, or ribbed).
3. Group: 1 (embedded abrasive strips).
4. Nosing Style: Square, adjustable to cover angles between 60 and 90 degrees.
5. Nosing Height: 1-1/2 inches (38 mm).
6. Thickness: 1/4 inch (6 mm) and tapered to back edge.
7. Size: Lengths and depths to fit each stair tread in one piece.
8. Integral Risers: Smooth, flat; in height that fully covers substrate.

D. Landing Tile: Matching treads; produced by same manufacturer as treads and recommended by manufacturer for installation with treads.

E. Locations: Provide rubber stair accessories in areas indicated.

F. Colors and Patterns: As selected by Architect from manufacturer's full range of solid and speckled colors, raised surface elements, and abrasive nosings.

2.3 RUBBER MOLDING ACCESSORY ("**TS**")

A. Manufacturers: Subject to compliance with requirements, provide products by one of the following:

1. Armstrong World Industries, Inc.
2. Burke Mercer Flooring Products; a division of Burke Industries Inc.
3. Johnsonite; a Tarkett company.
4. Roppe Corporation, USA.

B. Description: Rubber nosing for carpet, nosing for resilient floor covering, reducer strip for resilient floor covering, joiner for tile and carpet, and transition strips.

C. Profile and Dimensions: As indicated.

D. Locations: Provide rubber molding accessories in areas indicated, and as required to cover and protect all edges of flooring materials that would otherwise be exposed.

E. Colors and Patterns: As selected by Architect from manufacturer's full range.

2.4 INSTALLATION MATERIALS

A. Trowelable Leveling and Patching Compounds: Latex-modified, portland-cement-based or blended hydraulic-cement-based formulation provided or approved by resilient-product manufacturer for applications indicated.

B. Adhesives: Water-resistant type recommended by resilient-product manufacturer for resilient products and substrate conditions indicated.

C. Stair-Tread Nose Filler: Two-part epoxy compound recommended by resilient stair-tread manufacturer to fill nosing substrates that do not conform to tread contours.

PART 3 - EXECUTION

3.1 EXAMINATION

A. Examine substrates, with Installer present, for compliance with requirements for maximum moisture content and other conditions affecting performance of the Work.

1. Verify that finishes of substrates comply with tolerances and other requirements specified in other Sections and that substrates are free of cracks, ridges, depressions, scale, and foreign deposits that might interfere with adhesion of resilient products.

B. Proceed with installation only after unsatisfactory conditions have been corrected.

1. Installation of resilient products indicates acceptance of surfaces and conditions.

3.2 PREPARATION

A. Prepare substrates according to manufacturer's written instructions to ensure adhesion of resilient products.

B. Concrete Substrates for Resilient Stair Accessories: Prepare horizontal surfaces according to ASTM F 710.

1. Verify that substrates are dry and free of curing compounds, sealers, and hardeners.
2. Remove substrate coatings and other substances that are incompatible with adhesives and that contain soap, wax, oil, or silicone, using mechanical methods recommended by manufacturer. Do not use solvents.
3. Alkalinity and Adhesion Testing: Perform tests recommended by manufacturer. Proceed with installation only after substrate alkalinity falls within range on pH scale recommended by manufacturer in writing, but not less than 5 or more than 9 pH.
4. Moisture Testing: Perform tests so that each test area does not exceed 200 sq. ft. (18.6 sq. m), and perform no fewer than three tests in each installation area and with test areas evenly spaced in installation areas.

a. Relative Humidity Test: Using in-situ probes, ASTM F 2170. Proceed with installation only after substrates have a maximum 75 percent relative humidity level measurement.

C. Fill cracks, holes, and depressions in substrates with trowelable leveling and patching compound; remove bumps and ridges to produce a uniform and smooth substrate.

D. Do not install resilient products until materials are the same temperature as space where they are to be installed.

1. At least 48 hours in advance of installation, move resilient products and installation materials into spaces where they will be installed.

E. Immediately before installation, sweep and vacuum clean substrates to be covered by resilient products.

3.3 RESILIENT BASE INSTALLATION

A. Comply with manufacturer's written instructions for installing resilient base.

B. Apply resilient base to walls, columns, pilasters, casework and cabinets in toe spaces, and other permanent fixtures in rooms and areas where base is required.

C. Install resilient base in lengths as long as practical without gaps at seams and with tops of adjacent pieces aligned.

D. Tightly adhere resilient base to substrate throughout length of each piece, with base in continuous contact with horizontal and vertical substrates.

E. Do not stretch resilient base during installation.

F. On masonry surfaces or other similar irregular substrates, fill voids along top edge of resilient base with manufacturer's recommended adhesive filler material.

G. Preformed Corners: Install preformed corners before installing straight pieces.

H. Job-Formed Corners:

1. Outside Corners: Use straight pieces of maximum lengths possible and form with returns not less than 3 inches (76 mm) in length.

   a. Form without producing discoloration (whitening) at bends.

2. Inside Corners: Use straight pieces of maximum lengths possible and form with returns not less than 3 inches (76 mm) in length.

   a. Miter or cope corners to minimize open joints.

3.4 RESILIENT ACCESSORY INSTALLATION

A. Comply with manufacturer's written instructions for installing resilient accessories.

B. Resilient Stair Accessories:

1. Use stair-tread-nose filler to fill nosing substrates that do not conform to tread contours.
2. Tightly adhere to substrates throughout length of each piece.
3. For treads installed as separate, equal-length units, install to produce a flush joint between units.

C. Resilient Molding Accessories: Butt to adjacent materials and tightly adhere to substrates throughout length of each piece. Install reducer strips at edges of floor covering that would otherwise be exposed.

3.5 CLEANING AND PROTECTION

A. Comply with manufacturer's written instructions for cleaning and protecting resilient products.

B. Perform the following operations immediately after completing resilient-product installation:

1. Remove adhesive and other blemishes from surfaces.
2. Sweep and vacuum horizontal surfaces thoroughly.
3. Damp-mop horizontal surfaces to remove marks and soil.

C. Protect resilient products from mars, marks, indentations, and other damage from construction operations and placement of equipment and fixtures during remainder of construction period.

D. Cover resilient products subject to wear and foot traffic until Substantial Completion.

END OF SECTION 096513

SECTION 096516 - RESILIENT SHEET FLOORING

PART 1 - GENERAL

1.1 RELATED DOCUMENTS

A. Drawings and general provisions of the Contract, including General and Supplementary Conditions and Division 01 Specification Sections, apply to this Section.

1.2 SUMMARY

A. Section Includes:

1. Vinyl sheet flooring with backing.

1.3 ACTION SUBMITTALS

A. Product Data: For each type of product.

B. Shop Drawings: For each type of resilient sheet flooring.

1. Include sheet flooring layouts, locations of seams, edges, columns, doorways, enclosing partitions, built-in furniture, cabinets, and cutouts.
2. Show details of special patterns.

C. Samples for Initial Selection: For each type of resilient sheet flooring indicated.

D. Samples for Verification: For each type of resilient sheet flooring, in manufacturer's standard size, but not less than 6-by-9-inch (150-by-230-mm) sections of each color, texture, and pattern required.

1. For heat-welding bead, manufacturer's standard-size Samples, but not less than 9 inches (230 mm) long, of each color required.

E. Welded-Seam Samples: For seamless-installation technique indicated and for each resilient sheet flooring product, color, and pattern required; with seam running lengthwise and in center of 6-by-9-inch (150-by-230-mm) Sample applied to a rigid backing and prepared by Installer for this Project.

1.4 INFORMATIONAL SUBMITTALS

A. Qualification Data: For Installer.

1.5 CLOSEOUT SUBMITTALS

A. Maintenance Data: For each type of resilient sheet flooring to include in maintenance manuals.

1.6 MAINTENANCE MATERIAL SUBMITTALS

A. Furnish extra materials, from the same product run, that match products installed and that are packaged with protective covering for storage and identified with labels describing contents.

1. Resilient Sheet Flooring: Furnish not less than 10 linear feet (3 linear m) for every 500 linear feet (150 linear m) or fraction thereof, in roll form and in full roll width for each type, color, and pattern of flooring installed.

1.7 QUALITY ASSURANCE

A. Installer Qualifications: An entity that employs installers and supervisors who are competent in techniques required by manufacturer for resilient sheet flooring installation and seaming method indicated.

1. Engage an installer who employs workers for this Project who are trained or certified by resilient sheet flooring manufacturer for installation techniques required.

1.8 DELIVERY, STORAGE, AND HANDLING

A. Store resilient sheet flooring and installation materials in dry spaces protected from the weather, with ambient temperatures maintained within range recommended by manufacturer, but not less than 50 deg F (10 deg C) or more than 90 deg F (32 deg C). Store rolls upright.

1.9 FIELD CONDITIONS

A. Maintain ambient temperatures within range recommended by manufacturer, but not less than 70 deg F (21 deg C) or more than 85 deg F (29 deg C), in spaces to receive resilient sheet flooring during the following periods:

1. 48 hours before installation.
2. During installation.
3. 48 hours after installation.

B. After installation and until Substantial Completion, maintain ambient temperatures within range recommended by manufacturer, but not less than 55 deg F (13 deg C) or more than 95 deg F (35 deg C).

C. Close spaces to traffic during resilient sheet flooring installation.

D. Close spaces to traffic for 48 hours after resilient sheet flooring installation.

E. Install resilient sheet flooring after other finishing operations, including painting, have been completed.

PART 2 - PRODUCTS

2.1 PERFORMANCE REQUIREMENTS

A. Fire-Test-Response Characteristics: For resilient sheet flooring, as determined by testing identical products according to ASTM E 648 or NFPA 253 by a qualified testing agency.

1. Critical Radiant Flux Classification: Class I, not less than 0.45 W/sq. cm.

2.2 VINYL SHEET FLOORING WITH BACKING (**VS-#**)

A. Basis-of-Design Product: Subject to compliance with requirements, provide Mannington Mills, Inc.; Biospec MD or a comparable product by one of the following:

1. Armstrong World Industries, Inc.
2. Congoleum Corporation.
3. Forbo Industries, Inc.

B. Product Standard: ASTM F 1303.

1. Type (Binder Content): Type II, minimum binder content of 34 percent.
2. Wear-Layer Thickness: Grade 1.
3. Overall Thickness: 0.080 inches.
4. Backing Class: Class A (fibrous).

C. Wearing Surface: Embossed.

D. Sheet Width: 6 feet 6 inches (2.0 m).

E. Seamless-Installation Method: Heat welded.

F. Colors and Patterns:

1. VS-1: Sterling Blue #15312.
2. VS-2: New Navy #15354.

2.3 INSTALLATION MATERIALS

A. Trowelable Leveling and Patching Compounds: Latex-modified, portland-cement-based or blended hydraulic-cement-based formulation provided or approved by resilient sheet flooring manufacturer for applications indicated.

B. Adhesives: Water-resistant type recommended by flooring and adhesive manufacturers to suit resilient sheet flooring and substrate conditions indicated.

C. Seamless-Installation Accessories:

1. Heat-Welding Bead: Manufacturer's solid-strand product for heat welding seams.

a. Colors: Match flooring.

D. Integral-Flash-Cove-Base Accessories:

1. Cove Strip: 1-inch (25-mm) radius provided or approved by resilient sheet flooring manufacturer.
2. Cap Strip: Tapered vinyl cap provided or approved by resilient sheet flooring manufacturer.

a. Basis-of-Design: Altro; C4 Cap Strip.

PART 3 - EXECUTION

3.1 EXAMINATION

A. Examine substrates, with Installer present, for compliance with requirements for maximum moisture content and other conditions affecting performance of the Work.

1. Verify that finishes of substrates comply with tolerances and other requirements specified in other Sections and that substrates are free of cracks, ridges, depressions, scale, and foreign deposits that might interfere with adhesion of resilient sheet flooring.

B. Proceed with installation only after unsatisfactory conditions have been corrected.

3.2 PREPARATION

A. Prepare substrates according to resilient sheet flooring manufacturer's written instructions to ensure adhesion of resilient sheet flooring.

B. Concrete Substrates: Prepare according to ASTM F 710.

1. Verify that substrates are dry and free of curing compounds, sealers, and hardeners.
2. Remove substrate coatings and other substances that are incompatible with adhesives and that contain soap, wax, oil, or silicone, using mechanical methods recommended by resilient sheet flooring manufacturer. Do not use solvents.
3. Alkalinity and Adhesion Testing: Perform tests recommended by resilient sheet flooring manufacturer. Proceed with installation only after substrate alkalinity falls within range on pH scale recommended by manufacturer in writing, but not less than 5 or more than 9 pH.
4. Moisture Testing: Perform tests so that each test area does not exceed 200 sq. ft. (18.6 sq. m), and perform no fewer than three tests in each installation area and with test areas evenly spaced in installation areas.

a. Relative Humidity Test: Using in-situ probes, ASTM F 2170. Proceed with installation only after substrates have a maximum 75 percent relative humidity level measurement.

C. Fill cracks, holes, and depressions in substrates with trowelable leveling and patching compound; remove bumps and ridges to produce a uniform and smooth substrate.

D. Do not install resilient sheet flooring until materials are the same temperature as space where they are to be installed.

1. At least 48 hours in advance of installation, move flooring and installation materials into spaces where they will be installed.

E. Immediately before installation, sweep and vacuum clean substrates to be covered by resilient sheet flooring.

3.3 RESILIENT SHEET FLOORING INSTALLATION

A. Comply with manufacturer's written instructions for installing resilient sheet flooring.

B. Unroll resilient sheet flooring and allow it to stabilize before cutting and fitting.

C. Lay out resilient sheet flooring as follows:

1. Maintain uniformity of flooring direction.
2. Minimize number of seams; place seams in inconspicuous and low-traffic areas, at least 6 inches (152 mm) away from parallel joints in flooring substrates.
3. Match edges of flooring for color shading at seams.
4. Avoid cross seams.

D. Scribe and cut resilient sheet flooring to butt neatly and tightly to vertical surfaces and permanent fixtures including built-in furniture, cabinets, pipes, outlets, and door frames.

E. Extend resilient sheet flooring into toe spaces, door reveals, closets, and similar openings.

F. Maintain reference markers, holes, and openings that are in place or marked for future cutting by repeating on resilient sheet flooring as marked on substrates. Use chalk or other nonpermanent marking device.

G. Install resilient sheet flooring on covers for telephone and electrical ducts and similar items in installation areas. Maintain overall continuity of color and pattern between pieces of flooring installed on covers and adjoining flooring. Tightly adhere flooring edges to substrates that abut covers and to cover perimeters.

H. Adhere resilient sheet flooring to substrates using a full spread of adhesive applied to substrate to produce a completed installation without open cracks, voids, raising and puckering at joints, telegraphing of adhesive spreader marks, and other surface imperfections.

I. Seamless Installation:

1. Heat-Welded Seams: Comply with ASTM F 1516. Rout joints and heat weld with welding bead to fuse sections permanently into a seamless flooring installation. Prepare, weld, and finish seams to produce surfaces flush with adjoining flooring surfaces.
2. Chemically Bonded Seams: Bond seams with chemical-bonding compound to fuse sections permanently into a seamless flooring installation. Prepare seams and apply compound to produce tightly fitted seams without gaps, overlays, or excess bonding compound on flooring surfaces.

J. Integral-Flash-Cove Base: Cove resilient sheet flooring 6 inches (152 mm) up vertical surfaces. Support flooring at horizontal and vertical junction with cove strip. Butt at top against cap strip.

1. Install metal corners at inside and outside corners.

3.4 CLEANING AND PROTECTION

A. Comply with manufacturer's written instructions for cleaning and protecting resilient sheet flooring.

B. Perform the following operations immediately after completing resilient sheet flooring installation:

1. Remove adhesive and other blemishes from surfaces.
2. Sweep and vacuum surfaces thoroughly.
3. Damp-mop surfaces to remove marks and soil.

C. Protect resilient sheet flooring from mars, marks, indentations, and other damage from construction operations and placement of equipment and fixtures during remainder of construction period.

D. Cover resilient sheet flooring until Substantial Completion.

END OF SECTION 096516

SECTION 096519 - RESILIENT TILE FLOORING

PART 1 - GENERAL

1.1 RELATED DOCUMENTS

A. Drawings and general provisions of the Contract, including General and Supplementary Conditions and Division 01 Specification Sections, apply to this Section.

1.2 SUMMARY

A. Section Includes:

1. Rubber floor tile.
2. Vinyl composition floor tile.

1.3 ACTION SUBMITTALS

A. Product Data: For each type of product.

B. Samples for Initial Selection: For each type of floor tile indicated.

C. Samples for Verification: Full-size units of each color and pattern of floor tile required.

1.4 INFORMATIONAL SUBMITTALS

A. Qualification Data: For Installer.

1.5 CLOSEOUT SUBMITTALS

A. Maintenance Data: For each type of floor tile to include in maintenance manuals.

1.6 MAINTENANCE MATERIAL SUBMITTALS

A. Furnish extra materials, from the same product run, that match products installed and that are packaged with protective covering for storage and identified with labels describing contents.

1. Floor Tile: Furnish one box for every 50 boxes or fraction thereof, of each type, color, and pattern of floor tile installed.

1.7 QUALITY ASSURANCE

A. Installer Qualifications: An entity that employs installers and supervisors who are competent in techniques required by manufacturer for floor tile installation and seaming method indicated.

1. Engage an installer who employs workers for this Project who are trained or certified by floor tile manufacturer for installation techniques required.

1.8 DELIVERY, STORAGE, AND HANDLING

A. Store floor tile and installation materials in dry spaces protected from the weather, with ambient temperatures maintained within range recommended by manufacturer, but not less than 50 deg F (10 deg C) or more than 90 deg F (32 deg C). Store floor tiles on flat surfaces.

1.9 FIELD CONDITIONS

A. Maintain ambient temperatures within range recommended by manufacturer, but not less than 70 deg F (21 deg C) or more than 95 deg F (35 deg C), in spaces to receive floor tile during the following periods:

1. 48 hours before installation.
2. During installation.
3. 48 hours after installation.

B. After installation and until Substantial Completion, maintain ambient temperatures within range recommended by manufacturer, but not less than 55 deg F (13 deg C) or more than 95 deg F (35 deg C).

C. Close spaces to traffic during floor tile installation.

D. Close spaces to traffic for 48 hours after floor tile installation.

E. Install floor tile after other finishing operations, including painting, have been completed.

PART 2 - PRODUCTS

2.1 PERFORMANCE REQUIREMENTS

A. Fire-Test-Response Characteristics: For resilient floor tile, as determined by testing identical products according to ASTM E 648 or NFPA 253 by a qualified testing agency.

1. Critical Radiant Flux Classification: Class I, not less than 0.45 W/sq. cm.

2.2 RUBBER FLOOR TILE (**RUB**)

A. Basis-of-Design Product: Subject to compliance with requirements, provide Johnsonite; a Tarkett company; safeTcork Slip Resistant Rubber Tile or a comparable product by one of the following:

1. N+ Rubber.
2. Nora Systems, Inc.

B. Tile Standard: ASTM F 1344, Class I-A, Homogeneous Rubber Tile, solid color and Class I-B, Homogeneous Rubber Tile, through mottled.

C. Hardness: Manufacturer's standard hardness, measured using Shore, Type A durometer according to ASTM D 2240.

D. Wearing Surface: Smooth.

E. Thickness: 0.125 inch (3.2 mm).

F. Nominal Size: 18 by 18 inches (500 by 500 mm).

G. Colors and Patterns: As selected by Architect from manufacturer's full range of solid and speckled colors.

2.3 VINYL COMPOSITION FLOOR TILE (**VCT**)

A. Basis-of-Design Product: Subject to compliance with requirements, provide Armstrong World Industries, Inc; Excelon Companion Square, Excelon Imperial Texture, Excelon Stonetex, Excelon Multicolor, and Excelon Rave or a comparable product by one of the following:

1. Congoleum Corporation.
2. Mannington Mills, Inc.

B. Tile Standard: ASTM F 1066, Class 2, through pattern.

C. Wearing Surface: Smooth.

D. Thickness: 0.125 inch (3.2 mm).

E. Size: 12 by 12 inches (305 by 305 mm).

F. Colors and Patterns:

1. VCT-1: Blue Cloud #51933.
2. VCT-2: Marina Blue #51820.
3. VCT-3: Lemon Lick #57509.
4. VCT-4: Classic Black #51910.

2.4 INSTALLATION MATERIALS

A. Trowelable Leveling and Patching Compounds: Latex-modified, portland-cement-based or blended hydraulic-cement-based formulation provided or approved by floor tile manufacturer for applications indicated.

B. Adhesives: Water-resistant type recommended by floor tile and adhesive manufacturers to suit floor tile and substrate conditions indicated.

C. Floor Polish: Provide protective, liquid floor-polish products recommended by floor tile manufacturer.

D. Sealers and Finish Coats for Resilient Terrazzo Floor Tile: Products recommended by floor tile manufacturer for resilient terrazzo floor tile.

PART 3 - EXECUTION

3.1 EXAMINATION

A. Examine substrates, with Installer present, for compliance with requirements for maximum moisture content and other conditions affecting performance of the Work.

1. Verify that finishes of substrates comply with tolerances and other requirements specified in other Sections and that substrates are free of cracks, ridges, depressions, scale, and foreign deposits that might interfere with adhesion of floor tile.

B. Proceed with installation only after unsatisfactory conditions have been corrected.

3.2 PREPARATION

A. Prepare substrates according to floor tile manufacturer's written instructions to ensure adhesion of resilient products.

B. Concrete Substrates: Prepare according to ASTM F 710.

1. Verify that substrates are dry and free of curing compounds, sealers, and hardeners.
2. Remove substrate coatings and other substances that are incompatible with adhesives and that contain soap, wax, oil, or silicone, using mechanical methods recommended by floor tile manufacturer. Do not use solvents.
3. Alkalinity and Adhesion Testing: Perform tests recommended by floor tile manufacturer. Proceed with installation only after substrate alkalinity falls within range on pH scale recommended by manufacturer in writing, but not less than 5 or more than 9 pH.
4. Moisture Testing: Perform tests so that each test area does not exceed 1000 sq. ft. (304.8 sq. m), and perform no fewer than three tests in each installation area and with test areas evenly spaced in installation areas.

a. Relative Humidity Test: Using in-situ probes, ASTM F 2170. Proceed with installation only after substrates have a maximum 75 percent relative humidity level measurement.

C. Access Flooring Panels: Remove protective film of oil or other coating using method recommended by access flooring manufacturer.

D. Fill cracks, holes, and depressions in substrates with trowelable leveling and patching compound; remove bumps and ridges to produce a uniform and smooth substrate.

E. Do not install floor tiles until materials are the same temperature as space where they are to be installed.

1. At least 48 hours in advance of installation, move resilient floor tile and installation materials into spaces where they will be installed.

F. Immediately before installation, sweep and vacuum clean substrates to be covered by resilient floor tile.

3.3 FLOOR TILE INSTALLATION

A. Comply with manufacturer's written instructions for installing floor tile.

B. Lay out floor tiles from center marks established with principal walls, discounting minor offsets, so tiles at opposite edges of room are of equal width. Adjust as necessary to avoid using cut widths that equal less than one-half tile at perimeter.

1. Lay tiles square with room axis, unless otherwise indicated.

C. Match floor tiles for color and pattern by selecting tiles from cartons in the same sequence as manufactured and packaged, if so numbered. Discard broken, cracked, chipped, or deformed tiles.

1. Lay tiles with grain direction alternating in adjacent tiles (basket-weave pattern).

D. Scribe, cut, and fit floor tiles to butt neatly and tightly to vertical surfaces and permanent fixtures including built-in furniture, cabinets, pipes, outlets, and door frames.

E. Extend floor tiles into toe spaces, door reveals, closets, and similar openings. Extend floor tiles to center of door openings.

F. Maintain reference markers, holes, and openings that are in place or marked for future cutting by repeating on floor tiles as marked on substrates. Use chalk or other nonpermanent marking device.

G. Install floor tiles on covers for telephone and electrical ducts, building expansion-joint covers, and similar items in installation areas. Maintain overall continuity of color and pattern between pieces of tile installed on covers and adjoining tiles. Tightly adhere tile edges to substrates that abut covers and to cover perimeters.

H. Adhere floor tiles to substrates using a full spread of adhesive applied to substrate to produce a completed installation without open cracks, voids, raising and puckering at joints, telegraphing of adhesive spreader marks, and other surface imperfections.

I. Seamless Installation:

1. Heat-Welded Seams: Comply with ASTM F 1516. Rout joints and heat weld with welding bead to fuse sections permanently into a seamless flooring installation. Prepare, weld, and finish seams to produce surfaces flush with adjoining flooring surfaces.
2. Chemically Bonded Seams: Bond seams with chemical-bonding compound to fuse sections permanently into a seamless flooring installation. Prepare seams and apply compound to produce tightly fitted seams without gaps, overlays, or excess bonding compound on flooring surfaces.

J. Resilient Terrazzo Accessories: Install according to manufacturer's written instructions.

3.4 CLEANING AND PROTECTION

A. Comply with manufacturer's written instructions for cleaning and protecting floor tile.

B. Perform the following operations immediately after completing floor tile installation:

1. Remove adhesive and other blemishes from surfaces.
2. Sweep and vacuum surfaces thoroughly.
3. Damp-mop surfaces to remove marks and soil.

C. Protect floor tile from mars, marks, indentations, and other damage from construction operations and placement of equipment and fixtures during remainder of construction period.

D. VCT Floor Polish: Remove soil, adhesive, and blemishes from floor tile surfaces before applying liquid floor polish.

1. Apply two coat(s).

E. Cover floor tile until Substantial Completion.

END OF SECTION 096519

SECTION 096566 - RESILIENT ATHLETIC FLOORING

PART 1 - GENERAL

1.1 RELATED DOCUMENTS

A. Drawings and general provisions of the Contract, including General and Supplementary Conditions and Division 01 Specification Sections, apply to this Section.

1.2 SUMMARY

A. Section Includes:

1. Sheet vinyl flooring.

B. Related Requirements:

1. Section 096513 "Resilient Base and Accessories" for wall base and accessories installed with resilient athletic flooring.

1.3 COORDINATION

A. Coordinate layout and installation of flooring with floor inserts for gymnasium equipment.

1.4 ACTION SUBMITTALS

A. Product Data: For each type of product.

B. Shop Drawings: Show installation details and locations of the following:

1. Layout, colors, widths, and dimensions of game lines and markers.
2. Locations of floor inserts for athletic equipment installed through flooring.
3. Seam locations for sheet flooring.

C. Samples for Initial Selection: For each type of resilient athletic flooring.

1. Game-Line and Marker Paint: Include charts showing available colors and glosses.

D. Samples for Verification: For each type, color, and pattern of flooring specified, 6-inch- (150-mm-) square in size and of same thickness and material indicated for the Work.

1. Game-Line- and Marker-Paint Samples: Include Sample sets showing game-line- and marker-paint colors applied to flooring.
2. Seam Samples: For each vinyl sheet flooring color and pattern required; with seam running lengthwise and in center of 6-by-9-inch (150-by-230-mm) Sample applied to a rigid backing and prepared by Installer for this Project.

1.5 INFORMATIONAL SUBMITTALS

A. Qualification Data: For sheet vinyl flooring Installer.

1.6 CLOSEOUT SUBMITTALS

A. Maintenance Data: For resilient athletic flooring to include in maintenance manuals.

1.7 MAINTENANCE MATERIAL SUBMITTALS

A. Furnish extra materials, from the same product run, that match products installed and that are packaged with protective covering for storage and identified with labels describing contents.

1. Sheet Flooring: Furnish full-width rolls of not less than 10 linear feet (3 linear m) for each 500 linear feet (150 linear m) or fraction thereof, of each type, color, and pattern of flooring installed.

1.8 QUALITY ASSURANCE

A. Sheet Vinyl Flooring Installer Qualifications: An experienced installer who has completed sheet vinyl flooring installations using seaming methods indicated for this Project and similar in material, design, and extent to that indicated for this Project; who is acceptable to manufacturer; and whose work has resulted in installations with a record of successful in-service performance.

1.9 DELIVERY, STORAGE, AND HANDLING

A. Deliver materials in original packages and containers, with seals unbroken, bearing manufacturer's labels indicating brand name and directions for storing.

B. Store materials to prevent deterioration.

1. Store rolls upright.

1.10 FIELD CONDITIONS

A. Adhesively Applied Products:

1. Maintain temperatures during installation within range recommended in writing by manufacturer, but not less than 70 deg F (21 deg C) or more than 95 deg F (35 deg C), in spaces to receive flooring 48 hours before installation, during installation, and 48 hours after installation unless longer period is recommended in writing by manufacturer.
2. After postinstallation period, maintain temperatures within range recommended in writing by manufacturer, but not less than 55 deg F (13 deg C) or more than 95 deg F (35 deg C).
3. Close spaces to traffic during flooring installation.
4. Close spaces to traffic for 48 hours after flooring installation unless manufacturer recommends longer period in writing.

B. Install flooring after other finishing operations, including painting, have been completed.

PART 2 - PRODUCTS

2.1 SHEET VINYL FLOORING (**RAF-1**)

A. Basis-of-Design Product: Subject to compliance with requirements, provide Johnsonite; a Tarkett company; Training Sports & Multi-Function Commercial Flooring or a comparable product by one of the following:

1. Robbins Sport Surfaces.
2. Amarco Products.
3. Conner Sports Surface Solutions.
4. Lonseal, Inc.
5. Tarkett Sports; a division of the Tarkett Group.

B. Description: Sheet vinyl flooring specifically designed for adhered athletic flooring applications.

C. Sheet Vinyl Flooring with Backing: ASTM F 1303.

1. Wear-Layer Thickness: Grade 1.
2. Overall Thickness: 6.5 mm.
3. Backing: High-density closed-cell foam with reinforced fiberglass grid.

D. Seaming Method: Heat welded.

E. Traffic-Surface Texture: Embossed.

F. Applied Finish: Factory-applied UV urethane.

G. Roll Size: Not less than 48 inches (1219 mm) wide by longest length that is practical to minimize splicing during installation.

H. Color and Pattern: Golden Maple #9002.

2.2 ACCESSORIES

A. Trowelable Leveling and Patching Compound: Latex-modified, hydraulic-cement-based formulation approved by flooring manufacturer.

B. Adhesives: Water-resistant type recommended in writing by manufacturer for substrate and conditions indicated.

C. Game-Line and Marker Paint: Complete system including primer, if any, compatible with flooring and recommended in writing by flooring and paint manufacturers for use indicated.

PART 3 - EXECUTION

3.1 EXAMINATION

A. Examine substrates, with Installer present, for compliance with requirements for installation tolerances, moisture content, and other conditions affecting performance of the Work.

1. Verify that finishes of substrates comply with tolerances and other requirements specified in other Sections and that substrates are free of cracks, ridges, depressions, scale, and foreign deposits that might interfere with adhesion of resilient products.

B. Proceed with installation only after unsatisfactory conditions have been corrected.

3.2 PREPARATION

A. Prepare substrates according to manufacturer's written instructions to ensure adhesion of flooring.

B. Concrete Substrates: Prepare according to ASTM F 710.

1. Verify that substrates are dry and free of curing compounds, sealers, and hardeners.
2. Alkalinity Testing: Perform pH testing according to ASTM F 710. Proceed with installation only if pH readings are not less than 7.0 and not greater than 8.5.
3. Moisture Testing: Perform tests so that each test area does not exceed 1000 sq. ft. (304.8 sq. m), and perform no fewer than three tests in each installation area and with test areas evenly spaced in installation areas.

a. Relative Humidity Test: Using in-situ probes, ASTM F 2170. Proceed with installation only after substrates have a maximum 75 percent relative humidity level measurement.

C. Remove substrate coatings and other substances that are incompatible with adhesives and that contain soap, wax, oil, or silicone, using mechanical methods recommended in writing by manufacturer. Do not use solvents.

D. Use trowelable leveling and patching compound to fill cracks, holes, and depressions in substrates.

E. Move flooring and installation materials into spaces where they will be installed at least 48 hours in advance of installation unless manufacturer recommends a longer period in writing.

1. Do not install flooring until it is the same temperature as space where it is to be installed.

F. Sweep and vacuum clean substrates to be covered by flooring immediately before installation. After cleaning, examine substrates for moisture, alkaline salts, carbonation, and dust. Proceed with installation only after unsatisfactory conditions have been corrected.

3.3 FLOORING INSTALLATION, GENERAL

A. Comply with manufacturer's written installation instructions.

B. Scribe, cut, and fit flooring to butt neatly and tightly to vertical surfaces, equipment anchors, floor outlets, and other interruptions of floor surface.

C. Extend flooring into toe spaces, door reveals, closets, and similar openings unless otherwise indicated.

D. Maintain reference markers, holes, and openings that are in place or marked for future cutting by repeating subfloor markings on flooring. Use nonpermanent, nonstaining marking device.

3.4 SHEET FLOORING INSTALLATION

A. Unroll sheet flooring and allow it to stabilize before cutting and fitting.

B. Lay out sheet flooring as follows:

1. Maintain uniformity of flooring direction.
2. Minimize number of seams; place seams in inconspicuous and low-traffic areas, at least 6 inches (150 mm) away from parallel joints in flooring substrates.
3. Match edges of flooring for color shading at seams.
4. Locate seams according to approved Shop Drawings.

C. Adhere products to substrates using a full spread of adhesive applied to substrate to comply with adhesive and flooring manufacturers' written instructions, including those for trowel notching, adhesive mixing, and adhesive open and working times.

1. Provide completed installation without open cracks, voids, raising and puckering at joints, telegraphing of adhesive spreader marks, and other surface imperfections.

D. Vinyl Sheet Flooring Seams: Prepare and finish seams to produce surfaces flush with adjoining flooring surfaces.

1. Heat-Welded Seams: Comply with ASTM F 1516. Rout joints and use welding bead to permanently fuse sections into a seamless flooring.

3.5 GAME LINES AND MARKERS

A. Mask flooring at game lines and markers, and apply paint to produce sharp edges. Where crossing, break minor game line at intersection; do not overlap lines.

B. Apply game lines and markers in widths and colors according to requirements indicated on Drawings.

3.6 CLEANING AND PROTECTION

A. Perform the following operations immediately after completing flooring installation:

1. Remove adhesive and other blemishes from flooring surfaces.
2. Sweep and vacuum flooring thoroughly.
3. Damp-mop flooring to remove marks and soil after time period recommended in writing by manufacturer.

B. Protect flooring from mars, marks, indentations, and other damage from construction operations and placement of equipment and fixtures during remainder of construction period. Use protection methods recommended in writing by manufacturer.

1. Do not move heavy and sharp objects directly over flooring. Protect flooring with plywood or hardboard panels to prevent damage from storing or moving objects over flooring.

END OF SECTION 096566

SECTION 096723 - RESINOUS FLOORING

PART 1 - GENERAL

1.1 RELATED DOCUMENTS

A. Drawings and general provisions of the Contract, including General and Supplementary Conditions and Division 01 Specification Sections, apply to this Section.

1.2 SUMMARY

A. Section includes resinous flooring systems.

1.3 PREINSTALLATION MEETINGS

A. Preinstallation Conference: Conduct conference at Project site.

1.4 ACTION SUBMITTALS

A. Product Data: For each type of product. Include manufacturer's technical data, application instructions, and recommendations for each resinous flooring component required.

B. Samples for Initial Selection: For each type of exposed finish required.

C. Samples for Verification: For each resinous flooring system required, 6 inches (150 mm) square, applied to a rigid backing by Installer for this Project.

1.5 INFORMATIONAL SUBMITTALS

A. Installer Certificates: Signed by manufacturer certifying that installers comply with specified requirements.

B. Material Certificates: For each resinous flooring component, from manufacturer.

C. Material Test Reports: For each resinous flooring system, by a qualified testing agency.

1.6 CLOSEOUT SUBMITTALS

A. Maintenance Data: For resinous flooring to include in maintenance manuals.

1.7 QUALITY ASSURANCE

A. Installer Qualifications: An authorized representative who is trained and approved by manufacturer.

B. Engage an installer who is certified in writing by resinous flooring manufacturer as qualified to apply resinous flooring systems indicated.

1.8 DELIVERY, STORAGE, AND HANDLING

A. Deliver materials in original packages and containers, with seals unbroken, bearing manufacturer's labels indicating brand name and directions for storage and mixing with other components.

1.9 FIELD CONDITIONS

A. Environmental Limitations: Comply with resinous flooring manufacturer's written instructions for substrate temperature, ambient temperature, moisture, ventilation, and other conditions affecting resinous flooring application.

B. Lighting: Provide permanent lighting or, if permanent lighting is not in place, simulate permanent lighting conditions during resinous flooring application.

C. Close spaces to traffic during resinous flooring application and for 24 hours after application unless manufacturer recommends a longer period.

1.10 WARRANTY

A. Manufacturer shall provide a single, written warranty covering both material and workmanship for a period of one year from date of substantial completion.

PART 2 - PRODUCTS

2.1 PERORMANCE REQUIREMENTS

A. Flammability: Self-extinguishing according to ASTM D 635.

2.2 MANUFACTURERS

A. Source Limitations: Obtain primary resinous flooring materials, including primers, resins, hardening agents, grouting coats, and topcoats, from single source from single manufacturer. Obtain secondary materials, including patching and fill material, joint sealant, and repair materials, of type and from manufacturer recommended in writing by manufacturer of primary materials.

2.3 RESINOUS FLOORING (**RES-1**)

A. Resinous Flooring System: Abrasion-, impact-, and chemical-resistant, aggregate-filled, and resin-based monolithic floor surfacing designed to produce a seamless floor.

1. Basis-of-Design Product: Subject to compliance with requirements, provide Stonhard, Inc.; Stonres RTZ or a comparable product approved by Architect prior to bidding from one of the following manufacturers:

   a. Dur-A-Flex, Inc.
   b. Key Resin Company.
   c. Polymerica Incorporated.

2. Locations: Toilet rooms.

B. System Characteristics:

1. Color and Pattern: Custom blend as selected by Architect from manufacturer's full range of chips and matrices.
2. Wearing Surface: Manufaturer's standard texture.
3. Overall System Thickness: 3/16 inch (4.8 mm).

C. Primer: Type recommended by resinous flooring manufacturer for substrate and resinous flooring system indicated.

1. Formulation Description: 100 percent solids.

D. Waterproofing Membrane: Type recommended by resinous flooring manufacturer for substrate and resinous flooring system indicated.

1. Formulation Description: 100 percent solids.

E. Reinforcing Membrane: Flexible resin formulation that is recommended by resinous flooring manufacturer for substrate and resinous flooring system indicated and that inhibits substrate cracks from reflecting through resinous flooring.

1. Formulation Description: 100 percent solids.

a. Provide fiberglass scrim embedded in reinforcing membrane.

F. Patching and Fill Material: Resinous product of or approved by resinous flooring manufacturer and recommended by manufacturer for application indicated.

G. Body Coats:

1. Resin: Urethane.
2. Type: Pigmented.
3. Formulation Description: 100 percent solids.
4. Aggregates: Rubber flakes.

H. Grout Coat:

1. Resin: Urethane.
2. Type: Clear.
3. Formulation Description: 100 percent solids.

I. Topcoats: Sealing or finish coats.

1. Resin: Urethane.
2. Formulation Description: Water based.
3. Type: Clear.
4. Number of Coats: One.
5. Finish: Matte.

J. System Physical Properties: Provide resinous flooring system with the following minimum physical property requirements when tested according to test methods indicated:

1. Impact Resistance: No chipping, cracking, or delamination and not more than 1/16-inch (1.6-mm) permanent indentation according to MIL-D-3134J.
2. Resistance to Heat: Delta E < 8 according to ASTM F 1514.

3. Residual Indentation: 1 percent maximum according to ASTM F 1914
4. Abrasion Resistance: 0.01 gm. maximum weight loss according to ASTM D 3389, H-18 500 g 1000 cycles.
5. Hardness: 85, Shore A according to ASTM D 2240.
6. Critical Radiant Flux: 0.45 W/sq. cm or greater according to NFPA 253.

2.4 RESINOUS FLOORING (**RES-2**)

A. Resinous Flooring System: Abrasion-, impact-, and chemical-resistant, aggregate-filled, and resin-based monolithic floor surfacing designed to produce a seamless floor and integral cove base.

1. Basis-of-Design Product: Subject to compliance with requirements, provide Stonhard, Inc.; Stonshield UTS or a comparable product approved by Architect prior to bidding from one of the following manufacturers:

a. Dur-A-Flex, Inc.
b. Key Resin Company.
c. Polymerica Incorporated.

2. Location: Kitchen area.

B. System Characteristics:

1. Color and Pattern: Custom blend as selected by Architect from manufacturer's full range of chips and matrices.
2. Wearing Surface: Textured for slip resistance.
3. Overall System Thickness: 1/4 inch (6.4 mm).
4. Federal Agency Approvals: USDA and FDA approved for food-processing environments.

C. Primer: Type recommended by resinous flooring manufacturer for substrate and resinous flooring system indicated.

D. Body Coats:

1. Resin: Urethane.
2. Formulation Description: 100 percent solids.
3. Application Method: Screeded and troweled.
4. Number of Coats: One.
5. Thickness of Coat: 1/4 inch (6.4 mm).
6. Aggregates: Manufacturer's standard.

E. Topcoats: Sealing or finish coats.

1. Resin: Urethane.
2. Formulation Description: 100 percent solids.
3. Type: Clear.
4. Number of Coats: One.
5. Finish: Gloss.

F. System Physical Properties: Provide resinous flooring system with the following minimum physical property requirements when tested according to test methods indicated:

1. Compressive Strength: 7,700 minimum according to ASTM C 579.
2. Tensile Strength: 1,000 minimum according to ASTM C 307.

3. Flexural Modulus of Elasticity: 2.6 x 10^6 minimum according to ASTM C 580.
4. Impact Resistance: 160 in/lb. minimum according to ASTM D 2794.
5. Resistance to Elevated Temperature: No slip or flow of more than 1/16 inch (1.6 mm) according to MIL-D-3134J.
6. Abrasion Resistance: 0.10g maximum weight loss according to ASTM D 4060.
7. Hardness: 80 to 84, Shore D according to ASTM D 2240.
8. Critical Radiant Flux: 0.22 W/sq. cm or greater according to NFPA 253.

PART 3 - EXECUTION

3.1 PREPARATION

A. Prepare and clean substrates according to resinous flooring manufacturer's written instructions for substrate indicated. Provide clean, dry substrate for resinous flooring application.

B. Concrete Substrates: Provide sound concrete surfaces free of laitance, glaze, efflorescence, curing compounds, form-release agents, dust, dirt, grease, oil, and other contaminants incompatible with resinous flooring.

1. Roughen concrete substrates as follows:

a. Shot-blast surfaces with an apparatus that abrades the concrete surface, contains the dispensed shot within the apparatus, and recirculates the shot by vacuum pickup.
b. Comply with ASTM C 811 requirements unless manufacturer's written instructions are more stringent.

2. Repair damaged and deteriorated concrete according to resinous flooring manufacturer's written instructions.
3. Verify that concrete substrates are dry and moisture-vapor emissions are within acceptable levels according to manufacturer's written instructions.

a. Anhydrous Calcium Chloride Test: ASTM F 1869. Proceed with application of resinous flooring only after substrates have maximum moisture-vapor-emission rate of 3 lb of water/1000 sq. ft. (1.36 kg of water/92.9 sq. m) of slab area in 24 hours.
b. Plastic Sheet Test: ASTM D 4263. Proceed with application only after testing indicates absence of moisture in substrates.
c. Relative Humidity Test: Use in situ probes, ASTM F 2170. Proceed with installation only after substrates have a maximum 75 percent relative humidity level measurement.

4. Alkalinity and Adhesion Testing: Verify that concrete substrates have pH within acceptable range. Perform tests recommended by manufacturer. Proceed with application only after substrates pass testing.

C. Patching and Filling: Use patching and fill material to fill holes and depressions in substrates according to manufacturer's written instructions.

1. Control Joint Treatment: Treat control joints and other nonmoving substrate cracks to prevent cracks from reflecting through resinous flooring according to manufacturer's written instructions.

D. Resinous Materials: Mix components and prepare materials according to resinous flooring manufacturer's written instructions.

3.2 APPLICATION

A. Apply components of resinous flooring system according to manufacturer's written instructions to produce a uniform, monolithic wearing surface of thickness indicated.

1. Coordinate application of components to provide optimum adhesion of resinous flooring system to substrate, and optimum intercoat adhesion.
2. Cure resinous flooring components according to manufacturer's written instructions. Prevent contamination during application and curing processes.
3. Expansion and Isolation Joint Treatment: At substrate expansion and isolation joints, comply with resinous flooring manufacturer's written instructions.

B. Primer: Apply primer over prepared substrate at manufacturer's recommended spreading rate.

C. Reinforcing Membrane: Apply reinforcing membrane to substrate cracks.

D. Integral Cove Base: Apply cove base mix to wall surfaces before applying flooring. Apply according to manufacturer's written instructions and details, including those for taping, mixing, priming, troweling, sanding, and topcoating of cove base. Round internal and external corners.

1. Integral Cove Base: 4 inches (100 mm) high.

E. Self-Leveling Body Coats: Apply self-leveling slurry body coats in thickness indicated for flooring system.

1. Aggregates: Broadcast aggregates at rate recommended by manufacturer and, after resin is cured, remove excess aggregates to provide surface texture indicated.

F. Troweled or Screeded Body Coats: Apply troweled or screeded body coats in thickness indicated for flooring system. Hand or power trowel and grout to fill voids. When body coats are cured, remove trowel marks and roughness using method recommended by manufacturer.

G. Grout Coat: Apply grout coat, of type recommended by resinous flooring manufacturer, to fill voids in surface of final body coat.

H. Topcoats: Apply topcoats in number indicated for flooring system and at spreading rates recommended in writing by manufacturer and to produce wearing surface indicated.

3.3 FIELD QUALITY CONTROL

A. Material Sampling: Owner may, at any time and any number of times during resinous flooring application, require material samples for testing for compliance with requirements.

1. Owner will engage an independent testing agency to take samples of materials being used. Material samples will be taken, identified, sealed, and certified in presence of Contractor.
2. Testing agency will test samples for compliance with requirements, using applicable referenced testing procedures or, if not referenced, using testing procedures listed in manufacturer's product data.
3. If test results show applied materials do not comply with specified requirements, pay for testing, remove noncomplying materials, prepare surfaces coated with unacceptable materials, and reapply flooring materials to comply with requirements.

B. Core Sampling: At the direction of Owner and at locations designated by Owner, take one core sample per 1000 sq. ft. (92.9 sq. m) of resinous flooring, or portion of, to verify thickness. For each sample that

fails to comply with requirements, take two additional samples. Repair damage caused by coring. Correct deficiencies in installed flooring as indicated by testing.

3.4 PROTECTION

A. Protect resinous flooring from damage and wear during the remainder of construction period. Use protective methods and materials, including temporary covering, recommended in writing by resinous flooring manufacturer.

END OF SECTION 096723

SECTION 096813 - TILE CARPETING

PART 1 - GENERAL

1.1 RELATED DOCUMENTS

A. Drawings and general provisions of the Contract, including General and Supplementary Conditions and Division 01 Specification Sections, apply to this Section.

1.2 SUMMARY

A. Section includes modular carpet tile.

B. Related Requirements:

1. Section 096513 "Resilient Base and Accessories" for resilient wall base and accessories installed with carpet tile.

1.3 ACTION SUBMITTALS

A. Product Data: For each type of product.

1. Include manufacturer's written data on physical characteristics, durability, and fade resistance.
2. Include manufacturer's written installation recommendations for each type of substrate.

B. Shop Drawings: For carpet tile installation, plans showing the following:

1. Columns, doorways, enclosing walls or partitions, built-in cabinets, and locations where cutouts are required in carpet tiles.
2. Type, color, and location of edge, transition, and other accessory strips.
3. Transition details to other flooring materials.

C. Samples for Initial Selection: For each type of carpet tile.

1. Include Samples of exposed edge, transition, and other accessory stripping involving color or finish selection.

D. Samples for Verification: For each of the following products and for each color and texture required. Label each Sample with manufacturer's name, material description, color, pattern, and designation indicated on Drawings and in schedules.

1. Carpet Tile: Full-size Sample.
2. Exposed Edge, Transition, and Other Accessory Stripping: 12-inch- (300-mm-) long Samples.

1.4 INFORMATIONAL SUBMITTALS

A. Qualification Data: For Installer.

B. Product Test Reports: For carpet tile, for tests performed by a qualified testing agency.

1.5 CLOSEOUT SUBMITTALS

A. Maintenance Data: For carpet tiles to include in maintenance manuals. Include the following:

1. Methods for maintaining carpet tile, including cleaning and stain-removal products and procedures and manufacturer's recommended maintenance schedule.
2. Precautions for cleaning materials and methods that could be detrimental to carpet tile.

1.6 MAINTENANCE MATERIAL SUBMITTALS

A. Furnish extra materials, from the same product run, that match products installed and that are packaged with protective covering for storage and identified with labels describing contents.

1. Carpet Tile: Full-size units equal to 5 percent of amount installed for each type indicated, but not less than 10 sq. yd. (8.3 sq. m).

1.7 QUALITY ASSURANCE

A. Installer Qualifications: An experienced installer who is certified by the International Certified Floorcovering Installers Association at the Commercial II certification level.

1.8 DELIVERY, STORAGE, AND HANDLING

A. Comply with CRI's "CRI Carpet Installation Standard."

1.9 FIELD CONDITIONS

A. Comply with CRI's "CRI Carpet Installation Standard" for temperature, humidity, and ventilation limitations.

B. Environmental Limitations: Do not deliver or install carpet tiles until spaces are enclosed and weathertight, wet-work in spaces is complete and dry, and ambient temperature and humidity conditions are maintained at levels planned for building occupants during the remainder of the construction period.

C. Do not install carpet tiles over concrete slabs until slabs have cured and are sufficiently dry to bond with adhesive and concrete slabs have pH range recommended by carpet tile manufacturer.

D. Where demountable partitions or other items are indicated for installation on top of carpet tiles, install carpet tiles before installing these items.

1.10 WARRANTY

A. Special Warranty for Carpet Tiles: Manufacturer agrees to repair or replace components of carpet tile installation that fail in materials or workmanship within specified warranty period.

1. Warranty does not include deterioration or failure of carpet tile due to unusual traffic, failure of substrate, vandalism, or abuse.
2. Failures include, but are not limited to, the following:

a. More than 10 percent edge raveling, snags, and runs.

b. Dimensional instability.
c. Excess static discharge.
d. Loss of tuft-bind strength.
e. Loss of face fiber.
f. Delamination.

3. Warranty Period: 10 years from date of Substantial Completion.

PART 2 - PRODUCTS

2.1 MANUFACTURERS

A. Subject to compliance with requirements, provide basis-of-design product indicated, or comparable product by one of the following:

1. Mannington Mills, Inc.
2. Mohawk Group (The); Mohawk Carpet, LLC.
3. Shaw Contract Group; a Berkshire Hathaway company.
4. Tandus; a Tarkett company.

2.2 CARPET TILE (**CPT-1**)

A. Basis-of-Design Product: Subject to compliance with requirements, provide Tandus; Street Life #03973 or equivalent product by an approve manufacturer.

B. Color and Pattern: Blue Line #36109.

C. Fiber Type: Dynex SD Nylon.

D. Dye Method: Solution dyed.

E. Pile Characteristic: Patterned-loop pile.

F. Pile Thickness: 0.187 inches for finished carpet tile.

G. Stitches: 10 inch.

H. Gage: 5/64.

I. Backing System: Non-woven synthetic fiber.

J. Size: 24 by 24 inches.

K. Applied Treatments:

1. Soil-Resistance Treatment: Manufacturer's standard treatment.

L. Performance Characteristics:

1. Critical Radiant Flux Classification: Not less than 0.45 W/sq. cm according to NFPA 253.
2. Smoke Generation: Less than 450, according to ASTM E 662.

3. Dimensional Tolerance: Within 1/32 inch (0.8 mm) of specified size dimensions, as determined by physical measurement.
4. Colorfastness to Light: Not less than 4 after 40 AFU (AATCC fading units) according to AATCC 16, Option E.
5. Stain resistance: >8, according to AATCC 175-08.
6. Electrostatic Propensity: Less than 3.0 kV according to AATCC 134.

2.3 CARPET TILE (**CPT-2 & CPT-3 & CPT-4 & CPT-5**)

A. Basis-of-Design Product: Subject to compliance with requirements, provide Shaw Contract; Configure collection or equivalent product by an approve manufacturer.

B. Color and Pattern:

1. CPT-2: Base Hexagon 5T159, Scale 59501.
2. CPT-3: Color Shift Hexagon 5T161, Electric 59429.
3. CPT-4: Color Shift Hexagon 5T161, Sublime 59325.
4. CPT-5: Contact Hexagon 5T160, Sublime 59501.

C. Fiber Type: eco solution q® nylon.

D. Pile Characteristic: Multi-level pattern cut/loop.

E. Density: 10,065 oz./cu. yd.

F. Pile Thickness: 0.093 inches for finished carpet tile.

G. Stitches: 9 per inch.

H. Gage: 1/12.

I. Surface Pile Weight: 26 oz./sq. yd.

J. Backing System: Synthetic with ecowork tile.

K. Size: 28.8 by 24.9 inches.

L. Applied Treatments:

1. Soil-Resistance Treatment: Manufacturer's standard treatment.

M. Performance Characteristics:

1. Critical Radiant Flux Classification: Not less than 0.45 W/sq. cm according to NFPA 253.
2. Smoke Generation: Less than 450, according to ASTM E 662.
3. Dimensional Tolerance: Within 1/32 inch (0.8 mm) of specified size dimensions, as determined by physical measurement.
4. Dimensional Stability: 0.2 percent or less according to ISO 2551 (Aachen Test).
5. Electrostatic Propensity: Less than 3.5 kV according to AATCC 134.

2.4 CARPET TILE (**CPT-6**)

A. Basis-of-Design Product: Subject to compliance with requirements, provide Mannington; Ruffian II Infinity RE Modular or equivalent product by an approve manufacturer.

B. Color and Pattern: Ebony Earth 1506

C. Fiber Content: 100 percent nylon 6,6.

D. Dye Method: Solution dyed.

E. Pile Characteristic: Tip-sheared-loop.

F. Density: 8825 oz./cu. yd.

G. Pile Thickness: 0.155 inches for finished carpet tile.

H. Stitches: 9 per inch.

I. Gage: 5/32.

J. Surface Pile Weight: 38 oz./sq. yd.

K. Backing System: 100% synthetic with Infinity RE Modular.

L. Size: 24 by 24 inches.

M. Applied Treatments:

1. Soil-Resistance Treatment: Manufacturer's standard treatment.

N. Performance Characteristics:

1. Critical Radiant Flux Classification: Not less than 0.45 W/sq. cm according to NFPA 253.
2. Smoke Generation: Less than 450, according to ASTM E 662.
3. Dimensional Tolerance: Within 1/32 inch (0.8 mm) of specified size dimensions, as determined by physical measurement.
4. Dimensional Stability: 0.2 percent or less according to ISO 2551 (Aachen Test).
5. Electrostatic Propensity: Less than 3.0 kV according to AATCC 134.

2.5 INSTALLATION ACCESSORIES

A. Trowelable Leveling and Patching Compounds: Latex-modified, hydraulic-cement-based formulation provided or recommended by carpet tile manufacturer.

B. Adhesives: Water-resistant, mildew-resistant, nonstaining, pressure-sensitive type to suit products and subfloor conditions indicated, that comply with flammability requirements for installed carpet tile, and are recommended by carpet tile manufacturer for releasable installation.

C. Edge/Transition Strips: Provide molding accessories as specified in Section 096513 “Resilient Base and Accessories.”

PART 3 - EXECUTION

3.1 EXAMINATION

A. Examine substrates, areas, and conditions, with Installer present, for compliance with requirements for maximum moisture content, alkalinity range, installation tolerances, and other conditions affecting carpet tile performance.

B. Examine carpet tile for type, color, pattern, and potential defects.

C. Concrete Slabs: Verify that finishes comply with requirements specified in Section 033000 "Cast-in-Place Concrete" and that surfaces are free of cracks, ridges, depressions, scale, and foreign deposits.

1. Moisture Testing: Perform tests so that each test area does not exceed 1000 sq. ft. (304.8 sq. m), and perform no fewer than three tests in each installation area and with test areas evenly spaced in installation areas.

a. Relative Humidity Test: Using in situ probes, ASTM F 2170. Proceed with installation only after substrates have a maximum 75 percent relative humidity level measurement.
b. Perform additional moisture tests recommended in writing by adhesive and carpet tile manufacturers. Proceed with installation only after substrates pass testing.

D. Proceed with installation only after unsatisfactory conditions have been corrected.

3.2 PREPARATION

A. General: Comply with CRI's "Carpet Installation Standards" and with carpet tile manufacturer's written installation instructions for preparing substrates indicated to receive carpet tile.

B. Use trowelable leveling and patching compounds, according to manufacturer's written instructions, to fill cracks, holes, depressions, and protrusions in substrates. Fill or level cracks, holes and depressions 1/8 inch (3 mm) wide or wider, and protrusions more than 1/32 inch (0.8 mm) unless more stringent requirements are required by manufacturer's written instructions.

C. Concrete Substrates: Remove coatings, including curing compounds, and other substances that are incompatible with adhesives and that contain soap, wax, oil, or silicone, without using solvents. Use mechanical methods recommended in writing by adhesive and carpet tile manufacturers.

D. Metal Substrates: Clean grease, oil, soil and rust, and prime if recommended in writing by adhesive manufacturer. Rough sand painted metal surfaces and remove loose paint. Sand aluminum surfaces, to remove metal oxides, immediately before applying adhesive.

E. Broom and vacuum clean substrates to be covered immediately before installing carpet tile.

3.3 INSTALLATION

A. General: Comply with CRI's "CRI Carpet Installation Standard," Section 18, "Modular Carpet" and with carpet tile manufacturer's written installation instructions.

B. Installation Method: Glue down; install every tile with full-spread, releasable, pressure-sensitive adhesive.

C. Maintain dye-lot integrity. Do not mix dye lots in same area.

D. Maintain pile-direction patterns recommended in writing by carpet tile manufacturer.

E. Cut and fit carpet tile to butt tightly to vertical surfaces, permanent fixtures, and built-in furniture including cabinets, pipes, outlets, edgings, thresholds, and nosings. Bind or seal cut edges as recommended by carpet tile manufacturer.

F. Extend carpet tile into toe spaces, door reveals, closets, open-bottomed obstructions, removable flanges, alcoves, and similar openings.

G. Maintain reference markers, holes, and openings that are in place or marked for future cutting by repeating on carpet tile as marked on subfloor. Use nonpermanent, nonstaining marking device.

H. Install pattern parallel to walls and borders.

3.4 CLEANING AND PROTECTION

A. Perform the following operations immediately after installing carpet tile:

1. Remove excess adhesive and other surface blemishes using cleaner recommended by carpet tile manufacturer.
2. Remove yarns that protrude from carpet tile surface.
3. Vacuum carpet tile using commercial machine with face-beater element.

B. Protect installed carpet tile to comply with CRI's "Carpet Installation Standard," Section 20, "Protecting Indoor Installations."

C. Protect carpet tile against damage from construction operations and placement of equipment and fixtures during the remainder of construction period. Use protection methods indicated or recommended in writing by carpet tile manufacturer.

END OF SECTION 096813

SECTION 097200 - WALL COVERINGS

PART 1 - GENERAL

1.1 RELATED DOCUMENTS

A. Drawings and general provisions of the Contract, including General and Supplementary Conditions and Division 01 Specification Sections, apply to this Section.

1.2 SUMMARY

A. Section Includes:

1. Vinyl wall covering with custom-printed graphics.

1.3 ACTION SUBMITTALS

A. Product Data: For each type of product.

1. Include data on physical characteristics, durability, fade resistance, and fire-test-response characteristics.

B. Shop Drawings: Show location and extent of each wall-covering type. Indicate seams and termination points.

C. Samples for Initial Selection: For each type of wall covering.

D. Samples for Verification: For each type of wall covering and for each color, pattern, texture, and finish specified, full width by 36-inch- (914-mm-) long in size.

1. Wall-Covering Sample: From same production run to be used for the Work, with specified treatments applied. Show complete pattern repeat.

1.4 INFORMATIONAL SUBMITTALS

A. Qualification Data: For testing agency.

B. Product Test Reports: For each wall covering, for tests performed by a qualified testing agency.

1.5 CLOSEOUT SUBMITTALS

A. Maintenance Data: For wall coverings to include in maintenance manuals.

1.6 QUALITY ASSURANCE

A. Mockups: Build mockups to verify selections made under Sample submittals and to demonstrate aesthetic effects and to set quality standards for installation.

1. Build mockups for each type of wall covering on each substrate required. Comply with requirements in ASTM F 1141 for appearance shading characteristics.
2. Approval of mockups does not constitute approval of deviations from the Contract Documents contained in mockups unless Architect specifically approves such deviations in writing.
3. Subject to compliance with requirements, approved mockups may become part of the completed Work if undisturbed at time of Substantial Completion.

1.7 FIELD CONDITIONS

A. Environmental Limitations: Do not deliver or install wall coverings until spaces are enclosed and weathertight, wet work in spaces is complete and dry, work above ceilings is complete, and temporary HVAC system is operating and maintaining ambient temperature and humidity conditions at levels intended for occupants after Project completion during the remainder of the construction period.

1. Wood-Veneer Wall Coverings: Condition spaces for not less than 48 hours before installation.

B. Lighting: Do not install wall covering until lighting that matches conditions intended for occupants after Project completion is provided on the surfaces to receive wall covering.

C. Ventilation: Provide continuous ventilation during installation and for not less than the time recommended by wall-covering manufacturer for full drying or curing.

PART 2 - PRODUCTS

2.1 PERFORMANCE REQUIREMENTS

A. Fire-Test-Response Characteristics: As determined by testing identical wall coverings applied with identical adhesives to substrates according to test method indicated below by a qualified testing agency. Identify products with appropriate markings of applicable testing agency.

1. Surface-Burning Characteristics: Comply with ASTM E 84; testing by a qualified testing agency. Identify products with appropriate markings of applicable testing agency.

a. Flame-Spread Index: 75 or less.
b. Smoke-Developed Index: 450 or less.

2. Fire-Growth Contribution: No flashover and heat and smoke release according to NFPA 286.

2.2 VINYL WALL COVERING (**VWC**)

A. Manufacturers: Subject to compliance with requirements, available manufacturers offering products that may be incorporated into the Work include, but are not limited to the following:

1. Eykon Design Resources.
2. Koroseal Interior Products Group.
3. Wolf-Gordon.

B. Description: Provide full-color, custom-printed, mildew-resistant products in rolls from same production run and complying with the following:

1. CFFA-W-101-D for Type II, Medium-Duty products.

2. ASTM F 793 for strippable wall coverings.

    a. Category: V, Type II, Commercial Serviceability.

C. Total Weight: 20 oz., excluding coatings.

D. Sheet Width: 54 inches (1372 mm).

E. Backing: Nonwoven fabric.

F. Size: As indicated on Drawings.

G. Graphics: To be supplied by Architect via vector graphics file during submittal review process.

2.3 ACCESSORIES

A. Adhesive: Mildew-resistant, nonstaining, strippable adhesive, for use with specific wall covering and substrate application indicated and as recommended in writing by wall-covering manufacturer.

B. Primer/Sealer: Mildew resistant, complying with requirements in Section 099123 "Interior Painting" and recommended in writing by primer/sealer and wall-covering manufacturers for intended substrate.

C. Seam Tape: As recommended in writing by wall-covering manufacturer.

PART 3 - EXECUTION

3.1 EXAMINATION

A. Examine substrates and conditions, with Installer present, for compliance with requirements for levelness, wall plumbness, maximum moisture content, and other conditions affecting performance of the Work.

B. Proceed with installation only after unsatisfactory conditions have been corrected.

3.2 PREPARATION

A. Comply with manufacturer's written instructions for surface preparation.

B. Clean substrates of substances that could impair bond of wall covering, including dirt, oil, grease, mold, mildew, and incompatible primers.

C. Prepare substrates to achieve a smooth, dry, clean, structurally sound surface free of flaking, unsound coatings, cracks, and defects.

    1. Moisture Content: Maximum of 5 percent on new plaster, concrete, and concrete masonry units when tested with an electronic moisture meter.
    2. Gypsum Board: Prime with primer as recommended in writing by primer/sealer manufacturer and wall-covering manufacturer.
    3. Painted Surfaces: Treat areas susceptible to pigment bleeding.

D. Check painted surfaces for pigment bleeding. Sand gloss, semigloss, and eggshell finish with fine sandpaper.

E. Remove hardware and hardware accessories, electrical plates and covers, light fixture trims, and similar items.

F. Acclimatize wall-covering materials by removing them from packaging in the installation areas not less than 24 hours before installation.

3.3 WALL-COVERING INSTALLATION

A. Comply with wall-covering manufacturers' written installation instructions applicable to products and applications indicated.

B. Cut wall-covering strips in roll number sequence. Change the roll numbers at partition breaks and corners.

C. Install strips in same order as cut from roll.

D. Install wall covering without lifted or curling edges and without visible shrinkage.

E. Match pattern 72 inches (1830 mm) above adjacent floor (stair landing).

F. Install seams vertical and plumb at least 6 inches (150 mm) from outside corners and 6 inches (150 mm) from inside corners unless a change of pattern or color exists at corner. Horizontal seams are not permitted.

G. Trim edges and seams for color uniformity, pattern match, and tight closure. Butt seams without overlaps or gaps between strips.

H. Fully bond wall covering to substrate. Remove air bubbles, wrinkles, blisters, and other defects.

3.4 CLEANING

A. Remove excess adhesive at seams, perimeter edges, and adjacent surfaces.

B. Use cleaning methods recommended in writing by wall-covering manufacturer.

C. Replace strips that cannot be cleaned.

D. Reinstall hardware and hardware accessories, electrical plates and covers, light fixture trims, and similar items.

END OF SECTION 097200

SECTION 098433 - SOUND-ABSORBING WALL UNITS

PART 1 - GENERAL

1.1 RELATED DOCUMENTS

A. Drawings and general provisions of the Contract, including General and Supplementary Conditions and Division 01 Specification Sections, apply to this Section.

1.2 SUMMARY

A. Section includes shop-fabricated, acoustical panel units tested for acoustical performance, including the following:

1. Sound-absorbing wall panels.

1.3 DEFINITIONS

A. NRC: Noise Reduction Coefficient.

B. SAA: Sound Absorption Average.

1.4 ACTION SUBMITTALS

A. Product Data: For each type of product.

1. Include fabric facing, panel edge, core material, and mounting indicated.

B. Shop Drawings: For unit assembly and installation.

1. Include plans, elevations, sections, and mounting devices and details.
2. Include details at panel head, base, joints, and corners; and details at ceiling, floor base, and wall intersections. Indicate panel edge profile and core materials.
3. Include details at cutouts and penetrations for other work.
4. Include direction of fabric weave and pattern matching.

C. Samples for Initial Selection: For each type of fabric facing.

1. Include Samples of hardware and accessories involving color or finish selection.

D. Samples for Verification: For the following products:

1. Fabric: Full-width by approximately 36-inch- (900-mm-) long Sample, but not smaller than required to show complete pattern repeat, from dye lot to be used for the Work, and with specified treatments applied. Mark top and face of fabric.
2. Panel Edge: 12-inch- (300-mm-) long Sample(s) showing each edge profile, corner, and finish.
3. Mounting Devices: Full-size Samples.

1.5 INFORMATIONAL SUBMITTALS

A. Coordination Drawings: Elevations and other details, drawn to scale, on which the following items are shown and coordinated with each other, using input from installers of the items involved:

1. Electrical outlets, switches, and thermostats.
2. Items penetrating or covered by units including the following:

a. Lighting fixtures.
b. Air outlets and inlets.
c. Speakers.
d. Alarms.
e. Sprinklers.
f. Access panels.

3. Show operation of hinged and sliding components covered by or adjacent to units.

B. Product Certificates: For each type of unit.

C. Sample Warranty: For manufacturer's special warranty.

1.6 CLOSEOUT SUBMITTALS

A. Maintenance Data: For each type of unit to include in maintenance manuals. Include fabric manufacturers' written cleaning and stain-removal instructions.

1.7 MAINTENANCE MATERIAL SUBMITTALS

A. Furnish extra materials from same production run that match products installed and that are packaged with protective covering for storage and identified with labels describing contents.

1. Fabric: For each fabric, color, and pattern installed, provide length equal to 10 percent of amount installed, but no fewer than 10 sq. yd. (9 sq. m), full width of bolt.
2. Mounting Devices: Full-size units equal to 5 percent of amount installed, but no fewer than five devices, including unopened adhesives.

1.8 DELIVERY, STORAGE, AND HANDLING

A. Comply with fabric and unit manufacturers' written instructions for minimum and maximum temperature and humidity requirements for shipment, storage, and handling.

B. Deliver materials and units in unopened bundles and store in a temperature-controlled dry place with adequate air circulation.

1.9 FIELD CONDITIONS

A. Environmental Limitations: Do not install units until spaces are enclosed and weathertight, wet-work in spaces is complete and dry, work at and above ceilings is complete, and ambient temperature and humidity conditions are maintained at the levels indicated for Project when occupied for its intended use.

B. Lighting: Do not install units until a permanent level of lighting is provided on surfaces to receive the units.

C. Air-Quality Limitations: Protect units from exposure to airborne odors, such as tobacco smoke, and install units under conditions free from odor contamination of ambient air.

D. Field Measurements: Verify unit locations and actual dimensions of openings and penetrations by field measurements before fabrication, and indicate them on Shop Drawings.

PART 2 - PRODUCTS

2.1 MANUFACTURERS

A. Source Limitations: Obtain wall units specified in this Section from single source from single manufacturer.

2.2 PERFORMANCE REQUIREMENTS

A. Fire-Test-Response Characteristics: Units shall comply with "Surface-Burning Characteristics" or "Fire Growth Contribution" Subparagraph below, or both, as determined by testing identical products by UL or another testing and inspecting agency acceptable to authorities having jurisdiction:

1. Surface-Burning Characteristics: Comply with ASTM E 84 or UL 723; testing by a qualified testing agency. Identify products with appropriate markings of applicable testing agency.

a. Flame-Spread Index: 25 or less.
b. Smoke-Developed Index: 450 or less.

2. Fire Growth Contribution: Comply with acceptance criteria of local code and authorities having jurisdiction when tested according to NFPA 265 Method B Protocol or NFPA 286.

2.3 SOUND-ABSORBING WALL UNITS (**AP-1**)

A. Sound-Absorbing Wall Panel: Manufacturer's standard panel construction consisting of facing material stretched over front face of edge-framed core and bonded or attached to edges and back of frame.

B. Basis-of-Design Product: Subject to compliance with requirements, provide Acoustical Solutions, Inc.; Alphasorb High Impact Acoustic Panels or comparable product by one of the following:

1. Capaul Corporation; Solutions 600 with 10#/CF fiberglass tack/impact surface.
2. Conwed Designscape; an Owens Corning company; Respond High Impact.
3. Decoustics Limited; a Saint Gobain company; Panel Type HRI 1.
4. Kinetics Noise Control, Inc.; HardSide.
5. RPG Diffusor Systems, Inc.; Absorbor Hi Impact.
6. StretchWall Products, Inc.; AFG718 Panel.

a. Finish Color at Exposed Edges: Match color of facing material.

7. Mounting: Back mounted with manufacturer's standard metal clips or bar hangers, secured to substrate.
8. Core: Manufacturer's standard.

a. Core-Face Layer: Manufacturer's standard tackable, impact-resistant, high-density board.

9. Edge Construction: Manufacturer's standard chemically hardened core with no frame.
10. Edge Profile: Chamfered (beveled).
11. Corner Detail in Elevation: Square with continuous edge profile indicated.
12. Reveals between Panels: Recessed reveals.
13. Facing Material: FR701.
14. Acoustical Performance: Sound absorption NRC of not less than 0.90 according to ASTM C 423 for Type A mounting according to ASTM E 795.
15. Nominal Thickness: 1 inch (25 mm).
16. Panel Width: As indicated.
17. Panel Height: As indicated.

2.4 SOUND-ABSORBING WALL UNITS (**AP-2**)

A. Sound-Absorbing Wall Panel: Manufacturer's standard panel construction consisting of facing material.

B. Basis-of-Design: Subject to compliance with requirements, provide Armstrong World Industries; Tectum Wall Panels or a comparable product approved by architect.

1. Panel Shape: Flat.
2. Mounting: Edge mounted with splines secured to substrate.

a. Finish Color at Exposed Edges: Match color of facing material.

3. Mounting: Directly attached to substrate.
4. Core: Cementitious-fiber board.
5. Edge Construction: Manufacturer's standard chemically hardened core with no frame.
6. Edge Profile: Eased (small bevel).
7. Corner Detail in Elevation: Square with continuous edge profile indicated.
8. Colors: Two custom colors as selected by Architect from full range of Sherwin Williams color range.
9. Acoustical Performance: Sound absorption NRC of not less than 0.60 according to ASTM C 423 for Type A mounting according to ASTM E 795.
10. Nominal Overall Panel Thickness: 2 inches (51 mm).
11. Panel Width: 24 inches (610 mm).
12. Panel Height: 24 inches (610 mm).

2.5 MATERIALS

A. Core Materials:

1. Glass-Fiber Board: ASTM C 612; of type standard with manufacturer; nominal density of 6 to 7 lb/cu. ft. (96 to 112 kg/cu. m), unfaced, and dimensionally stable, molded rigid board; and with maximum flame-spread and smoke-developed indexes of 25 and 50, respectively.
2. Cementitious-Fiber Board: Density of not less than 20 lb/cu. ft. (320 kg/cu. m).
3. Tackable, Impact-Resistant, High-Density Board for Face Layer: 1/8-inch- (3.2-mm-) thick layer of compressed molded glass-fiber board with a nominal density of 16 to 18 lb/cu. ft. (256 to 288 kg/cu. m) laminated to face of core.
4. Wood and Plywood: Manufacturer's standard plywood or clear, vertical grain, straight, kiln-dried hardwood.

a. Fire-retardant treated by pressure process with a flame-spread index of 25 or less when tested according to ASTM E 84 or UL 723, and with no evidence of significant progressive combustion when the test is extended an additional 20 minutes, and with the flame front not extending more than 10.5 feet (3.2 m) beyond the centerline of the burners at any time during the test.

1) Treated material shall have a moisture content of 28 percent or less when tested according to ASTM D 3201/D 3201M at 92 percent relative humidity.
2) Kiln-dry material after treatment to 19 percent or less for lumber and 15 percent or less for plywood.

B. Facing Material: Fabric from same dye lot; color and pattern as selected by Architect from manufacturer's full range.

1. Manufacturer: Guilford of Maine.
2. Product Line/Pattern: FR701.
3. Style Number: 2100.

C. Mounting Devices: Concealed on back of unit, recommended by manufacturer to support weight of unit, and as follows:

1. Metal Clips or Bar Hangers: Manufacturer's standard two-part metal "Z" clips, with one part of each clip mechanically attached to back of unit and the other part to substrate, designed to permit unit removal.

2.6 FABRICATION

A. Standard Construction: Use manufacturer's standard construction unless otherwise indicated; with facing material applied to face, edges, and back border of dimensionally stable core; and with rigid edges to reinforce panel perimeter against warpage and damage.

B. Edge Hardening: For glass-fiber board cores, chemically harden core edges and areas of core where mounting devices are attached.

C. Core-Face Layer: Evenly stretched over core face and edges and securely attached to core; free from puckers, ripples, wrinkles, or sags.

D. Facing Material: Apply fabric facing fully covering visible surfaces of unit; with material stretched straight, on the grain, tight, square, and free from puckers, ripples, wrinkles, sags, blisters, seams, adhesive, or other visible distortions or foreign matter.

1. Square Corners: Tailor corners.
2. Radius and Other Nonsquare Corners: Attach facing material so there are no seams or gathering of material.
3. Fabrics with Directional or Repeating Patterns or Directional Weave: Mark fabric top and attach fabric in same direction so pattern or weave matches in adjacent units.

E. Dimensional Tolerances of Finished Units: Plus or minus 1/16 inch (1.6 mm) for the following:

1. Thickness.
2. Edge straightness.
3. Overall length and width.
4. Squareness from corner to corner.
5. Chords, radii, and diameters.

PART 3 - EXECUTION

3.1 EXAMINATION

A. Examine fabric, fabricated units, substrates, areas, and conditions for compliance with requirements, installation tolerances, and other conditions affecting unit performance.

B. Proceed with installation only after unsatisfactory conditions have been corrected.

3.2 INSTALLATION

A. Install units in locations indicated. Unless otherwise indicated, install units with vertical surfaces and edges plumb, top edges level and in alignment with other units, faces flush, and scribed to fit adjoining work accurately at borders and at penetrations.

B. Comply with manufacturer's written instructions for installation of units using type of mounting devices indicated. Mount units securely to supporting substrate.

C. Align fabric pattern and grain with adjacent units.

3.3 INSTALLATION TOLERANCES

A. Variation from Plumb and Level: Plus or minus 1/16 inch (1.6 mm) in 48 inches (1200 mm), noncumulative.

B. Variation of Joint Width: Not more than 1/16-inch (1.6-mm) variation from hairline in 48 inches (1200 mm), noncumulative.

3.4 CLEANING

A. Clip loose threads; remove pills and extraneous materials.

B. Clean panels on completion of installation to remove dust and other foreign materials according to manufacturer's written instructions.

END OF SECTION 098433

SECTION 099113 - EXTERIOR PAINTING

PART 1 - GENERAL

1.1 RELATED DOCUMENTS

A. Drawings and general provisions of the Contract, including General and Supplementary Conditions and Division 01 Specification Sections, apply to this Section.

1.2 SUMMARY

A. Section includes surface preparation and the application of paint systems on the following exterior substrates:

1. Steel and iron.
2. Galvanized metal.
3. Fiberglass.
4. Plastic.

B. Related Requirements:

1. Section 051200 "Structural Steel Framing" for shop priming of metal substrates.
2. Section 055000 "Metal Fabrications" for shop priming metal fabrications.
3. Section 055213 "Pipe and Tube Railings" for shop priming pipe and tube railings.
4. Section 099600 "High-Performance Coatings" for tile-like coatings.

1.3 DEFINITIONS

A. MPI Gloss Level 1: Not more than five units at 60 degrees and 10 units at 85 degrees, according to ASTM D 523.

B. MPI Gloss Level 3: 10 to 25 units at 60 degrees and 10 to 35 units at 85 degrees, according to ASTM D 523.

C. MPI Gloss Level 4: 20 to 35 units at 60 degrees and not less than 35 units at 85 degrees, according to ASTM D 523.

D. MPI Gloss Level 5: 35 to 70 units at 60 degrees, according to ASTM D 523.

E. MPI Gloss Level 6: 70 to 85 units at 60 degrees, according to ASTM D 523.

F. MPI Gloss Level 7: More than 85 units at 60 degrees, according to ASTM D 523.

1.4 ACTION SUBMITTALS

A. Product Data: For each type of product. Include preparation requirements and application instructions.

1. Include printout of current "MPI Approved Products List" for each product category specified, with the proposed product highlighted.

2. Indicate VOC content.

B. Samples for Initial Selection: For each type of topcoat product.

C. Samples for Verification: For each type of paint system and each color and gloss of topcoat.

1. Submit Samples on rigid backing, 8 inches (200 mm) square.
2. Apply coats on Samples in steps to show each coat required for system.
3. Label each coat of each Sample.
4. Label each Sample for location and application area.

D. Product List: Cross-reference to paint system and locations of application areas. Use same designations indicated on Drawings and in schedules. Include color designations.

1.5 MAINTENANCE MATERIAL SUBMITTALS

A. Furnish extra materials, from the same product run, that match products installed and that are packaged with protective covering for storage and identified with labels describing contents.

1. Paint: 5 percent, but not less than 1 gal. (3.8 L) of each material and color applied.

1.6 QUALITY ASSURANCE

A. Mockups: Apply mockups of each paint system indicated and each color and finish selected to verify preliminary selections made under Sample submittals and to demonstrate aesthetic effects and set quality standards for materials and execution.

1. Architect will select one surface to represent surfaces and conditions for application of each paint system.
2. Final approval of color selections will be based on mockups.

a. If preliminary color selections are not approved, apply additional mockups of additional colors selected by Architect at no added cost to Owner.

3. Approval of mockups does not constitute approval of deviations from the Contract Documents contained in mockups unless Architect specifically approves such deviations in writing.
4. Subject to compliance with requirements, approved mockups may become part of the completed Work if undisturbed at time of Substantial Completion.

1.7 DELIVERY, STORAGE, AND HANDLING

A. Store materials not in use in tightly covered containers in well-ventilated areas with ambient temperatures continuously maintained at not less than 45 deg F (7 deg C).

1. Maintain containers in clean condition, free of foreign materials and residue.
2. Remove rags and waste from storage areas daily.

1.8 FIELD CONDITIONS

A. Apply paints only when temperature of surfaces to be painted and ambient air temperatures are between 50 and 95 deg F (10 and 35 deg C).

B. Do not apply paints in snow, rain, fog, or mist; when relative humidity exceeds 85 percent; at temperatures less than 5 deg F (3 deg C) above the dew point; or to damp or wet surfaces.

PART 2 - PRODUCTS

2.1 MANUFACTURERS

A. Manufacturers: Subject to compliance with requirements, provide products by one of the following:

1. Benjamin Moore & Co.
2. PPG Paints.
3. Sherwin-Williams Company (The).

B. Products: Subject to compliance with requirements, provide one of the products listed in the Exterior Painting Schedule for the paint category indicated.

2.2 PAINT, GENERAL

A. MPI Standards: Products shall comply with MPI standards indicated and shall be listed in its "MPI Approved Products Lists."

B. Material Compatibility:

1. Materials for use within each paint system shall be compatible with one another and substrates indicated, under conditions of service and application as demonstrated by manufacturer, based on testing and field experience.
2. For each coat in a paint system, products shall be recommended in writing by topcoat manufacturers for use in paint system and on substrate indicated.

C. Colors:

1. PT-E1, hollow metal doors and frames: As selected by Architect from manufacturer's full range, semigloss.
2. PT-E2, steel lintels: As selected by Architect from manufacturer's full range, semigloss.
3. PT-E3, FRP trim: As selected by Architect from manufacturer's full range, semigloss.
4. PT-E4, plastic trim: As selected by Architect from manufacturer's full range, semigloss.
5. PT-E5, TBD: As selected by Architect from manufacturer's full range.
6. PT-E6, TBD: As selected by Architect from manufacturer's full range.

PART 3 - EXECUTION

3.1 EXAMINATION

A. Examine substrates and conditions, with Applicator present, for compliance with requirements for maximum moisture content and other conditions affecting performance of the Work.

B. Verify suitability of substrates, including surface conditions and compatibility, with existing finishes and primers.

C. Proceed with coating application only after unsatisfactory conditions have been corrected.

1. Application of coating indicates acceptance of surfaces and conditions.

3.2 PREPARATION

A. Comply with manufacturer's written instructions and recommendations in "MPI Architectural Painting Specification Manual" applicable to substrates and paint systems indicated.

B. Remove hardware, covers, plates, and similar items already in place that are removable and are not to be painted. If removal is impractical or impossible because of size or weight of item, provide surface-applied protection before surface preparation and painting.

1. After completing painting operations, use workers skilled in the trades involved to reinstall items that were removed. Remove surface-applied protection.

C. Clean substrates of substances that could impair bond of paints, including dust, dirt, oil, grease, and incompatible paints and encapsulants.

1. Remove incompatible primers and reprime substrate with compatible primers or apply tie coat as required to produce paint systems indicated.

D. Steel Substrates: Remove rust, loose mill scale, and shop primer if any. Clean using methods recommended in writing by paint manufacturer but not less than the following:

1. SSPC-SP 2.
2. SSPC-SP 3.
3. SSPC-SP 7/NACE No. 4.
4. SSPC-SP 11.

E. Shop-Primed Steel Substrates: Clean field welds, bolted connections, and areas where shop paint is abraded. Paint exposed areas with the same material as used for shop priming to comply with SSPC-PA 1 for touching up shop-primed surfaces.

F. Galvanized-Metal Substrates: Remove grease and oil residue from galvanized sheet metal by mechanical methods to produce clean, lightly etched surfaces that promote adhesion of subsequently applied paints.

G. Plastic Trim Fabrication Substrates: Remove dust, dirt, and other foreign material that might impair bond of paints to substrates.

3.3 APPLICATION

A. Apply paints according to manufacturer's written instructions and recommendations in "MPI Architectural Painting Specification Manual."

1. Use applicators and techniques suited for paint and substrate indicated.
2. Paint surfaces behind movable items same as similar exposed surfaces. Before final installation, paint surfaces behind permanently fixed items with prime coat only.
3. Paint both sides and edges of exterior doors and entire exposed surface of exterior door frames.
4. Paint entire exposed surface of window frames and sashes.
5. Do not paint over labels of independent testing agencies or equipment name, identification, performance rating, or nomenclature plates.
6. Primers specified in painting schedules may be omitted on items that are factory primed or factory finished if acceptable to topcoat manufacturers.

B. Tint undercoats same color as topcoat, but tint each undercoat a lighter shade to facilitate identification of each coat if multiple coats of same material are to be applied. Provide sufficient difference in shade of undercoats to distinguish each separate coat.

C. If undercoats or other conditions show through topcoat, apply additional coats until cured film has a uniform paint finish, color, and appearance.

D. Apply paints to produce surface films without cloudiness, spotting, holidays, laps, brush marks, roller tracking, runs, sags, ropiness, or other surface imperfections. Cut in sharp lines and color breaks.

E. Painting Fire Suppression, Plumbing, HVAC, Electrical, Communication, and Electronic Safety and Security Work:

1. Paint the following work where exposed to view:

a. Equipment, including panelboards.
b. Uninsulated metal piping.
c. Uninsulated plastic piping.
d. Pipe hangers and supports.
e. Metal conduit.
f. Plastic conduit.
g. Tanks that do not have factory-applied final finishes.

3.4 FIELD QUALITY CONTROL

A. Dry Film Thickness Testing: Owner may engage the services of a qualified testing and inspecting agency to inspect and test paint for dry film thickness.

1. Contractor shall touch up and restore painted surfaces damaged by testing.
2. If test results show that dry film thickness of applied paint does not comply with paint manufacturer's written recommendations, Contractor shall pay for testing and apply additional coats as needed to provide dry film thickness that complies with paint manufacturer's written recommendations.

3.5 CLEANING AND PROTECTION

A. At end of each workday, remove rubbish, empty cans, rags, and other discarded materials from Project site.

B. After completing paint application, clean spattered surfaces. Remove spattered paints by washing, scraping, or other methods. Do not scratch or damage adjacent finished surfaces.

C. Protect work of other trades against damage from paint application. Correct damage to work of other trades by cleaning, repairing, replacing, and refinishing, as approved by Architect, and leave in an undamaged condition.

D. At completion of construction activities of other trades, touch up and restore damaged or defaced painted surfaces.

3.6 EXTERIOR PAINTING SCHEDULE

A. Steel and Iron Substrates:

1. Water-Based Light Industrial Coating System:

    a. Prime Coat: Primer, zinc rich, inorganic, MPI #19.

        1) PPG Metalhide One-Pac Inorganic Zinc Rich Primer 97-676.
        2) Sherwin-Williams; Zinc Clad XI B69V11/B69D11.

    b. Intermediate Coat: Light industrial coating, exterior, water based, matching topcoat.
    c. Topcoat: Light industrial coating, exterior, water based, semi-gloss (MPI Gloss Level 5), MPI #163.

        1) PPG; Pitt-Tech Plus Interior/Exterior Semi-Gloss DTM Industrial Enamel 90-1210.
        2) Sherwin-Williams; DTM Semi-Gloss B66W01151.

B. Galvanized-Metal Substrates:

1. Water-Based Light Industrial Coating System:

    a. Prime Coat: Light industrial coating, exterior, water based, matching topcoat.
    b. Topcoat: Light industrial coating, exterior, water based, semi-gloss (MPI Gloss Level 5), MPI #163.

        1) PPG; Pitt-Tech Plus Interior/Exterior Semi-Gloss DTM Industrial Enamel 90-1210.
        2) Sherwin-Williams; DTM Semi-Gloss B66W01151.

C. Fiberglass Substrates:

1. Latex System MPI EXT 6.7A:

    a. Prime Coat: Primer, bonding, solvent based, MPI #17.

        1) Benjamin Moore; Fresh Start Multi-Purpose Latex Primer N023/F023.
        2) PPG; Seal Grip Interior/Exterior Acrylic Universal Primer /Sealer 17921XI.
        3) Sherwin Williams; Multi-purpose Latex Primer/Sealer B51W00450.

    b. Intermediate Coat: Latex, exterior, matching topcoat.
    c. Topcoat: Latex, exterior, semi-gloss (MPI Gloss Level 5), MPI #11.

        1) Benjamin Moore; Ultra Spec Waterborne Exterior Gloss N449/K449.
        2) PPG; SunProof Exterior Satin Acrylic 76-110.
        1) Sherwin Williams; Duration Exterior Acrylic Coating K34W00251.
        2) Sherwin Williams: SuperPaint Exterior Satin.

D. Plastic Trim Fabrication Substrates:

1. Latex System MPI EXT 6.8A:

    a. Prime Coat: Primer, bonding, water based, MPI #17.

        1) Benjamin Moore; Fresh Start Multi-Purpose Latex Primer N023/F023.
        2) PPG; Seal Grip Interior/Exterior Acrylic Universal Primer /Sealer 17921XI.
        3) Sherwin Williams; Multi-purpose Latex Primer/Sealer B51W00450.

    b. Intermediate Coat: Latex, exterior, matching topcoat.
    c. Topcoat: Latex, exterior, semi-gloss (MPI Gloss Level 5), MPI #11.

1) Benjamin Moore; Ultra Spec Waterborne Exterior Gloss N449/K449.
2) PPG; SunProof Exterior Satin Acrylic 76-110.
3) Sherwin Williams; Duration Exterior Acrylic Coating K34W00251.

END OF SECTION 099113

SECTION 099123 - INTERIOR PAINTING

PART 1 - GENERAL

1.1 RELATED DOCUMENTS

A. Drawings and general provisions of the Contract, including General and Supplementary Conditions and Division 01 Specification Sections, apply to this Section.

1.2 SUMMARY

A. Section includes surface preparation and the application of paint systems on the following interior substrates:

1. Concrete masonry units (CMUs).
2. Steel and iron.
3. Galvanized metal.
4. Wood.
5. Fiberglass.
6. Plastic.
7. Gypsum board.

B. Related Requirements:

1. Section 033000 "Cast-in-Place Concrete" for sealer/hardener applied to concrete.
2. Section 051200 "Structural Steel Framing" for shop priming structural steel.
3. Section 055000 "Metal Fabrications" for shop priming metal fabrications.
4. Section 055113 "Metal Pan Stairs" for shop priming metal pan stairs.
5. Section 055213 "Pipe and Tube Railings" for shop priming pipe and tube railings.
6. Section 099600 "High-Performance Coatings" for tile-like coatings.

1.3 DEFINITIONS

A. MPI Gloss Level 1: Not more than five units at 60 degrees and 10 units at 85 degrees, according to ASTM D 523.

B. MPI Gloss Level 2: Not more than 10 units at 60 degrees and 10 to 35 units at 85 degrees, according to ASTM D 523.

C. MPI Gloss Level 3: 10 to 25 units at 60 degrees and 10 to 35 units at 85 degrees, according to ASTM D 523.

D. MPI Gloss Level 4: 20 to 35 units at 60 degrees and not less than 35 units at 85 degrees, according to ASTM D 523.

E. MPI Gloss Level 5: 35 to 70 units at 60 degrees, according to ASTM D 523.

F. MPI Gloss Level 6: 70 to 85 units at 60 degrees, according to ASTM D 523.

G. MPI Gloss Level 7: More than 85 units at 60 degrees, according to ASTM D 523.

1.4 ACTION SUBMITTALS

A. Product Data: For each type of product. Include preparation requirements and application instructions.

1. Include Printout of current "MPI Approved Products List" for each product category specified, with the proposed product highlighted.
2. Indicate VOC content.

B. Samples for Initial Selection: For each type of topcoat product.

C. Samples for Verification: For each type of paint system and in each color and gloss of topcoat.

1. Submit Samples on rigid backing, 8 inches (200 mm) square.
2. Apply coats on Samples in steps to show each coat required for system.
3. Label each coat of each Sample.
4. Label each Sample for location and application area.

D. Product List: Cross-reference to paint system and locations of application areas. Use same designations indicated on Drawings and in schedules. Include color designations.

1.5 MAINTENANCE MATERIAL SUBMITTALS

A. Furnish extra materials, from the same product run, that match products installed and that are packaged with protective covering for storage and identified with labels describing contents.

1. Paint: 5 percent, but not less than 1 gal. (3.8 L) of each material and color applied.

1.6 QUALITY ASSURANCE

A. Mockups: Apply mockups of each paint system indicated and each color and finish selected to verify preliminary selections made under Sample submittals and to demonstrate aesthetic effects and set quality standards for materials and execution.

1. Architect will select one surface to represent surfaces and conditions for application of each paint system.

a. Vertical and Horizontal Surfaces: Provide samples of at least 100 sq. ft. (9 sq. m).
b. Other Items: Architect will designate items or areas required.

2. Final approval of color selections will be based on mockups.

a. If preliminary color selections are not approved, apply additional mockups of additional colors selected by Architect at no added cost to Owner.

3. Approval of mockups does not constitute approval of deviations from the Contract Documents contained in mockups unless Architect specifically approves such deviations in writing.
4. Subject to compliance with requirements, approved mockups may become part of the completed Work if undisturbed at time of Substantial Completion.

1.7 DELIVERY, STORAGE, AND HANDLING

A. Store materials not in use in tightly covered containers in well-ventilated areas with ambient temperatures continuously maintained at not less than 45 deg F (7 deg C).

1. Maintain containers in clean condition, free of foreign materials and residue.
2. Remove rags and waste from storage areas daily.

1.8 FIELD CONDITIONS

A. Apply paints only when temperature of surfaces to be painted and ambient air temperatures are between 50 and 95 deg F (10 and 35 deg C).

B. Do not apply paints when relative humidity exceeds 85 percent; at temperatures less than 5 deg F (3 deg C) above the dew point; or to damp or wet surfaces.

PART 2 - PRODUCTS

2.1 MANUFACTURERS

A. Manufacturers: Subject to compliance with requirements, provide products by one of the following:

1. Benjamin Moore & Co.
2. PPG Paints.
3. Sherwin-Williams Company (The).

B. Products: Subject to compliance with requirements, provide one of the products listed in the Interior Painting Schedule for the paint category indicated. Products for a single category shall be by a single manufacturer, unless otherwise noted.

2.2 PAINT, GENERAL

A. MPI Standards: Products shall comply with MPI standards indicated and shall be listed in its "MPI Approved Products Lists."

B. Material Compatibility:

1. Materials for use within each paint system shall be compatible with one another and substrates indicated, under conditions of service and application as demonstrated by manufacturer, based on testing and field experience.
2. For each coat in a paint system, products shall be recommended in writing by topcoat manufacturers for use in paint system and on substrate indicated.

C. Colors:

1. PT-1, typical wall color: White Flour #SW7102, eggshell.
2. PT-2, typical classroom accent wall, TBD: Blue Blood #SW6966, eggshell.
3. PT-3, TBD: Pacer White #SW6098.
4. PT-4, typical ceiling color: White Flour #SW7102, flat.
5. PT-5, platform walls and ceiling: Tricorn Black SW6258, flat.
6. PT-6, typical hollow metal doors and frames: Blue Blood #SW6966, semigloss.

7. PT-7, hollow metal doors and frames as directed by Architect: As selected by Architect from manufacturer's full range, semigloss.
8. PT-8, FRP trim: As selected by Architect from manufacturer's full range, semigloss.
9. PT-9, plastic trim: As selected by Architect from manufacturer's full range, semigloss.
10. PT-10, exposed trusses and beams at Gym & Cafeteria: As selected by Architect from manufacturer's full range, semigloss.
11. PT-11, exposed ductwork at Gym and Cafeteria: As selected by Architect from manufacturer's full range, TBD.
12. PT-12, exposed columns and X bracing: color to match PT-1, semigloss.
13. PT-13, TBD: As selected by Architect from manufacturer's full range, TBD.
14. PT-14, TBD: As selected by Architect from manufacturer's full range, TBD.
15. Steel lintels shall be same color as adjacent wall surface.
16. Epoxy paint colors shall be same as equivalent paint system (e.g., PT-1 and EP-1 are both White Flour SW7102, eggshell).

PART 3 - EXECUTION

3.1 EXAMINATION

A. Examine substrates and conditions, with Applicator present, for compliance with requirements for maximum moisture content and other conditions affecting performance of the Work.

B. Maximum Moisture Content of Substrates: When measured with an electronic moisture meter as follows:

1. Concrete: 12 percent.
2. Fiber-Cement Board: 12 percent.
3. Masonry (Clay and CMUs): 12 percent.
4. Wood: 15 percent.
5. Gypsum Board: 12 percent.

C. Gypsum Board Substrates: Verify that finishing compound is sanded smooth.

D. Verify suitability of substrates, including surface conditions and compatibility, with existing finishes and primers.

E. Proceed with coating application only after unsatisfactory conditions have been corrected.

1. Application of coating indicates acceptance of surfaces and conditions.

3.2 PREPARATION

A. Comply with manufacturer's written instructions and recommendations in "MPI Architectural Painting Specification Manual" applicable to substrates and paint systems indicated.

B. Remove hardware, covers, plates, and similar items already in place that are removable and are not to be painted. If removal is impractical or impossible because of size or weight of item, provide surface-applied protection before surface preparation and painting.

1. After completing painting operations, use workers skilled in the trades involved to reinstall items that were removed. Remove surface-applied protection if any.

C. Clean substrates of substances that could impair bond of paints, including dust, dirt, oil, grease, and incompatible paints and encapsulants.

1. Remove incompatible primers and reprime substrate with compatible primers or apply tie coat as required to produce paint systems indicated.

D. Concrete Substrates: Remove release agents, curing compounds, efflorescence, and chalk. Do not paint surfaces if moisture content or alkalinity of surfaces to be painted exceeds that permitted in manufacturer's written instructions.

E. Masonry Substrates: Remove efflorescence and chalk. Do not paint surfaces if moisture content or alkalinity of surfaces or mortar joints exceeds that permitted in manufacturer's written instructions.

F. Steel Substrates: Remove rust, loose mill scale, and shop primer, if any. Clean using methods recommended in writing by paint manufacturer but not less than the following:

1. SSPC-SP 7/NACE No. 4.

G. Shop-Primed Steel Substrates: Clean field welds, bolted connections, and areas where shop paint is abraded. Paint exposed areas with the same material as used for shop priming to comply with SSPC-PA 1 for touching up shop-primed surfaces.

H. Galvanized-Metal Substrates: Remove grease and oil residue from galvanized sheet metal by mechanical methods to produce clean, lightly etched surfaces that promote adhesion of subsequently applied paints.

I. Aluminum Substrates: Remove loose surface oxidation.

J. Wood Substrates:

1. Scrape and clean knots, and apply coat of knot sealer before applying primer.
2. Sand surfaces that will be exposed to view, and dust off.
3. Prime edges, ends, faces, undersides, and backsides of wood.
4. After priming, fill holes and imperfections in the finish surfaces with putty or plastic wood filler. Sand smooth when dried.

K. Cotton or Canvas Insulation Covering Substrates: Remove dust, dirt, and other foreign material that might impair bond of paints to substrates.

3.3 APPLICATION

A. Apply paints according to manufacturer's written instructions and to recommendations in "MPI Manual."

1. Use applicators and techniques suited for paint and substrate indicated.
2. Paint surfaces behind movable equipment and furniture same as similar exposed surfaces. Before final installation, paint surfaces behind permanently fixed equipment or furniture with prime coat only.
3. Paint front and backsides of access panels, removable or hinged covers, and similar hinged items to match exposed surfaces.
4. Do not paint over labels of independent testing agencies or equipment name, identification, performance rating, or nomenclature plates.
5. Primers specified in painting schedules may be omitted on items that are factory primed or factory finished if acceptable to topcoat manufacturers.

B. Tint each undercoat a lighter shade to facilitate identification of each coat if multiple coats of same material are to be applied. Tint undercoats to match color of topcoat, but provide sufficient difference in shade of undercoats to distinguish each separate coat.

C. If undercoats or other conditions show through topcoat, apply additional coats until cured film has a uniform paint finish, color, and appearance.

D. Apply paints to produce surface films without cloudiness, spotting, holidays, laps, brush marks, roller tracking, runs, sags, ropiness, or other surface imperfections. Cut in sharp lines and color breaks.

E. Painting Fire Suppression, Plumbing, HVAC, Electrical, Communication, and Electronic Safety and Security Work:

1. Paint the following work where exposed in equipment rooms:

   a. Equipment.
   b. Uninsulated metal piping.
   c. Uninsulated plastic piping.
   d. Pipe hangers and supports.
   e. Metal conduit.
   f. Plastic conduit.
   g. Tanks that do not have factory-applied final finishes.
   h. Duct, equipment, and pipe insulation having cotton or canvas insulation covering or other paintable jacket material.

2. Paint the following work where exposed in occupied spaces:

   a. Equipment, including panelboards.
   b. Uninsulated metal piping.
   c. Uninsulated plastic piping.
   d. Pipe hangers and supports.
   e. Metal conduit.
   f. Plastic conduit.
   g. Duct, equipment, and pipe insulation having cotton or canvas insulation covering or other paintable jacket material.
   h. Other items as directed by Architect.

3. Paint portions of internal surfaces of metal ducts, without liner, behind air inlets and outlets that are visible from occupied spaces.

3.4 FIELD QUALITY CONTROL

A. Dry Film Thickness Testing: Owner may engage the services of a qualified testing and inspecting agency to inspect and test paint for dry film thickness.

1. Contractor shall touch up and restore painted surfaces damaged by testing.
2. If test results show that dry film thickness of applied paint does not comply with paint manufacturer's written recommendations, Contractor shall pay for testing and apply additional coats as needed to provide dry film thickness that complies with paint manufacturer's written recommendations.

3.5 CLEANING AND PROTECTION

A. At end of each workday, remove rubbish, empty cans, rags, and other discarded materials from Project site.

B. After completing paint application, clean spattered surfaces. Remove spattered paints by washing, scraping, or other methods. Do not scratch or damage adjacent finished surfaces.

C. Protect work of other trades against damage from paint application. Correct damage to work of other trades by cleaning, repairing, replacing, and refinishing, as approved by Architect, and leave in an undamaged condition.

D. At completion of construction activities of other trades, touch up and restore damaged or defaced painted surfaces.

3.6 INTERIOR PAINTING SCHEDULE

A. Concrete Substrates, Traffic Surfaces ("**CONC-1**"): Sealer/hardener as specified in Section 033000.

B. CMU Substrates:

1. Institutional Low-Odor/VOC Latex System MPI INT 4.2E ("**PT**"):

a. Block Filler: Block filler, latex, interior/exterior, MPI #4.

1) Benjamin Moore; Ultra Spec Interior/Exterior High-Build Masonry Block Filler 571/K571.
2) Sherwin-Williams; PrepRite Interior/Exterior Block Filler B25W00025.

b. Intermediate Coat: Latex, interior, institutional low odor/VOC, matching topcoat.
c. Topcoat: Latex, interior, institutional low odor/VOC (MPI Gloss Level 3), MPI #145.

1) Benjamin Moore; Ultra Spec 500 Interior Low Sheen Finish N538/K538.
2) Sherwin Williams; ProMar 200HP, eggshell.

2. Water-Based Light Industrial Coating System MPI INT 4.2K ("**EP**"):

a. Block Filler: Block filler, latex, interior/exterior, MPI #4.

1) Benjamin Moore; Ultra Spec Interior/Exterior High-Build Masonry Block Filler 571/K571.
2) PPG; Concrete Coatings Block Filler Interior/Exterior Primer 3010.
3) Sherwin-Williams; PrepRite Interior/Exterior Block Filler B25W00025.

b. Intermediate Coat: Light industrial coating, interior, water based, matching topcoat.
c. Topcoat: Light industrial coating, interior, water based (MPI Gloss Level 3), MPI #151.

1) Benjamin Moore; Pre-Catalyzed Epoxy Eggshell V342.
2) PPG; Pitt-Tech Plus Interior/Exterior Satin DTM Industrial Enamel 90-1110.
3) Sherwin-Williams; DTM Acrylic Eg-Shel B66W01251 or Pro Industrial Precatalyzed Epoxy, Egshell K45 series.

C. Steel Substrates:

1. Institutional Low-Odor/VOC Latex System MPI INT 5.1S ("**PT**"):

   a. Prime Coat: Primer, rust inhibitive, water based MPI #107.

      1) Benjamin Moore; Ultra Spec HP Acrylic Metal Primer HP04/FP04.
      2) Sherwin-Williams; Pro-Cryl Universal Primer B66W310.

   b. Intermediate Coat: Latex, interior, institutional low odor/VOC, matching topcoat.
   c. Topcoat: Latex, interior, institutional low odor/VOC, semi-gloss (MPI Gloss Level 5), MPI #147.

      1) Benjamin Moore Ultra Spec 500 Waterborne Interior Gloos N540/K540.
      2) PPG Pure Performance Zero VOC, Semi-gloss 9-510X1.
      3) Sherwin-Williams; Acrylic Semi-Gloss Coating B66W00651.

2. Water-Based Dry-Fall over Shop-Applied Quick-Drying Shop Primer System MPI INT 5.1CCC ("**PT**"):

   a. Prime Coat: Primer, quick dry, for shop application, MPI #275.

      1) Sherwin-Williams; Kem-Flash 500 Primer.

   b. Topcoat: Dry fall, latex, flat, MPI #118.

      1) Benjamin Moore; Super Kote 5000 Dry Fall Acrylic Latex Flat N110.
      2) PPG; Latex Dryfall Flat 10111.
      3) Sherwin-Williams; Waterborne Acrylic Dryfall B42W00181.

   c. Topcoat: Dry fall, latex (MPI Gloss Level 5), MPI #226.

      1) Benjamin Moore; Super Kote 5000 Dry Fall Acrylic Latex Semi-Gloss 112.
      2) PPG; Glidden Professional Waterborne Semi-Gloss Dryfall 1486.
      3) Sherwin-Williams; Waterborne Acrylic Dryfall Semi-Glass B42W83.

D. Galvanized-Metal Substrates:

1. Institutional Low-Odor/VOC Latex System MPI INT 5.3N ("**PT**"):

   a. Prime Coat: Primer, galvanized, water based, MPI #134.

      1) Benjamin Moore; Acrylic Metal Primer HP04/FP04.
      2) PPG; Metal Primer, Latex base for rust-free galvanized metal 635-045.
      3) Sherwin-Williams; Pro-Cryl Universal Primer B66W310.

   b. Intermediate Coat: Latex, interior, institutional low odor/VOC, matching topcoat.
   c. Topcoat: Latex, interior, institutional low odor/VOC, semi-gloss (MPI Gloss Level 5), MPI #147.

      1) Benjamin Moore Ultra Spec 500 Waterborne Interior Gloos N540/K540.
      2) PPG Pure Performance Zero VOC, Semi-gloss 9-510X1.
      3) Sherwin-Williams; Acrylic Semi-Gloss Coating B66W00651.

2. Water-Based Dry-Fall System MPI INT 5.3H ("**PT**"):

   a. Prime Coat: Dry fall, water based, for galvanized steel, matching topcoat.

b. Topcoat: Dry fall, water based, for galvanized steel, flat (MPI Gloss Level 1), MPI #133.

1) Benjamin Moore; Super Kote 5000 Dry Fall Acrylic Latex Flat N110.
2) PPG; Interior DTM Latex Dryfall Flat 10112.
3) Sherwin-Williams; Waterborne Acrylic Dryfall B42W00181.

c. Topcoat: Dry fall, latex (MPI Gloss Level 5).

1) Benjamin Moore; Super Kote 5000 Dry Fall Acrylic Latex Semi-Gloss 112.
2) PPG; Glidden Professional Waterborne Semi-Gloss Dryfall 1486.
3) Sherwin-Williams; Waterborne Acrylic Dryfall Semi-Gloss B42W83.

E. Wood Substrates: Wood trim.

1. High-Performance Architectural Latex System MPI INT 6.3A:

a. Prime Coat: Primer, latex, for interior wood, MPI #39.

1) Benjamin Moore; Fresh Start Multi-Purpose Latex Primer N023/F023.
2) PPG; Seal Grip Interior/Exterior Acrylic Universal Primer /Sealer 17921XI.
3) Sherwin Williams; Multi-purpose Latex Primer/Sealer B51W00450.

b. Intermediate Coat: Latex, interior, high performance architectural, matching topcoat.
c. Topcoat: Latex, interior, high performance architectural, semi-gloss (MPI Gloss Level 5), MPI #141.

1) Benjamin Moore; Ultra Spec 500 Waterborne Interior Gloss N540/K540.
2) PPG; Manor Hall Interior semigloss 82-500.
3) Sherwin-Williams; Pro Industrial Acrylic Semi-Gloss Coating B66W00651.

F. Fiberglass Substrates:

1. High-Performance Architectural Latex System MPI INT 6.7H:

a. Prime Coat: Primer, bonding, water based, MPI #17.

1) Benjamin Moore; Fresh Start Multi-Purpose Latex Primer N023/F023.
2) PPG; Seal Grip Interior/Exterior Acrylic Universal Primer /Sealer 17921XI.
3) Sherwin Williams; Multi-purpose Latex Primer/Sealer B51W00450.

b. Intermediate Coat: Latex, interior, high performance architectural, matching topcoat.
c. Topcoat: Latex, interior, high performance architectural, semi-gloss (MPI Gloss Level 5), MPI #141.

1) Benjamin Moore; Ultra Spec 500 Waterborne Interior Gloss N540/K540.
2) PPG; Manor Hall Interior semigloss 82-500.
3) Sherwin-Williams; Pro Industrial Acrylic Semi-Gloss Coating B66W00651.

G. Plastic Substrates:

1. High-Performance Architectural Latex System MPI INT 6.8A:

a. Prime Coat: Primer, bonding, solvent based, MPI #69.

1) Benjamin Moore; Fresh Start Multi-Purpose Latex Primer N023/F023.

2) PPG; Seal Grip Interior/Exterior Acrylic Universal Primer/Sealer 17921XI
3) Sherwin Williams; Multi-Purpose Latex Primer/Sealer B51W00450.

b. Intermediate Coat: Latex, interior, high performance architectural, matching topcoat.
c. Topcoat: Latex, interior, high performance architectural, semi-gloss (MPI Gloss Level 5), MPI #141.

1) Benjamin Moore; Ultra Spec 500 Waterborne Interior Gloss N540/K540.
2) PPG; Manor Hall Interior semigloss 82-500.
3) Sherwin-Williams; Pro Industrial Acrylic Semi-Gloss Coating B66W00651.

H. Gypsum Board Substrates:

1. Institutional Low-Odor/VOC Latex System MPI INT 9.2M ("**PT**"):

a. Prime Coat: Primer sealer, interior, institutional low odor/VOC, MPI #149.

1) Benjamin Moore Ultra Spec 500 Waterborne Interior Primer N534/K534.
2) PPG; Lifemaster No VOC Interior Primer 9116.
3) PPG; Speedhide Zero Interior Zero VOC Latex Sealer 6-4900XI.
4) Sherwin-Williams; ProMar 200 Zero VOC Primer.

b. Intermediate Coat: Latex, interior, institutional low odor/VOC, matching topcoat.
c. Topcoat: Latex, interior, institutional low odor/VOC, flat (MPI Gloss Level 1), MPI #143.

1) Benjamin Moore; Ultra Spec 500 Interior Flat Finish N536/K536.
2) PPG; Speedhide Zero Interior Zero VOC Latex Flat Paint 6-4110XI.
3) Sherwin-Williams; ProMar 200 Zero VOC latex flat, B30 series.

d. Topcoat: Latex, interior, institutional low odor/VOC (MPI Gloss Level 2/3), MPI #144 / #145.

1) Benjamin Moore; Ultra Spec 500 Interior Eggshell N538/K538.
2) PPG; Lifemaster No VOC Interior Eggshell Paint 9300.
3) Sherwin-Williams; ProMar 200 HP Zero VOC Latex Eggshell.

2. Water-Based Light Industrial Coating System MPI INT 9.2L ("**EP**"):

a. Prime Coat: Primer sealer, latex, interior, MPI #50.

1) Benjamin Moore; Ultra Spec 500 Waterborne Interior Primer Sealer N534/K534.
2) PPG; Speedhide Zero Interior Zero VOC Latex Sealer 6-4900XI.
3) Sherwin-Williams; ProMar 200 Zero Interior Latex Primer B28W02600 / B28WQ2600.

b. Intermediate Coat: Light industrial coating, interior, water based, matching topcoat.
c. Topcoat: Light industrial coating, interior, water based (MPI Gloss Level 3), MPI #151.

1) Benjamin Moore; Corotech Pre-Catalyzed Epoxy Eggshell V342.
2) PPG; Devflex Interior/Exterior Acrylic Eggshell Enamel 4210.
3) Sherwin-Williams; Pro Industrial Pre-Catalyzed Waterbased Epoxy K45W00151.

END OF SECTION 099123

SECTION 099600 - HIGH-PERFORMANCE COATINGS

PART 1 - GENERAL

1.1 RELATED DOCUMENTS

A. Drawings and general provisions of the Contract, including General and Supplementary Conditions and Division 01 Specification Sections, apply to this Section.

1.2 SUMMARY

A. Section includes surface preparation and the application of high-performance coating systems on the following substrates:

1. Exterior Substrates:

   a. Steel.
   b. Galvanized metal.

2. Interior Substrates:

   a. Steel.
   b. Galvanized metal.

B. Related Requirements:

1. Section 051200 "Structural Steel Framing" for shop priming of structural steel with primers specified in this Section.
2. Section 055213 "Pipe and Tube Railings" for shop priming pipe and tube railings with coatings specified in this Section.
3. Section 099113 "Exterior Painting" for general field painting.
4. Section 099123 "Interior Painting" for general field painting.

1.3 DEFINITIONS

A. MPI Gloss Level 5: 35 to 70 units at 60 degrees, according to ASTM D 523.

B. MPI Gloss Level 6: 70 to 85 units at 60 degrees, according to ASTM D 523.

C. MPI Gloss Level 7: More than 85 units at 60 degrees, according to ASTM D 523.

1.4 ACTION SUBMITTALS

A. Product Data: For each type of product. Include preparation requirements and application instructions.

1. Include printout of current "MPI Approved Products List" for each product category specified, with the proposed product highlighted.
2. Indicate VOC content.

B. Samples for Initial Selection: For each type of topcoat product indicated.

C. Samples for Verification: For each type of coating system and each color and gloss of topcoat indicated.

1. Submit Samples on rigid backing, 8 inches (200 mm) square.
2. Apply coats on Samples in steps to show each coat required for system.
3. Label each coat of each Sample.
4. Label each Sample for location and application area.

D. Product List: Cross-reference to coating system and locations of application areas. Use same designations indicated on Drawings and in schedules. Include color designations.

1.5 MAINTENANCE MATERIAL SUBMITTALS

A. Furnish extra materials, from the same product run, that match products installed and that are packaged with protective covering for storage and identified with labels describing contents.

1. Coatings: 5 percent, but not less than 1 gal. (3.8 L) of each material and color applied.

1.6 QUALITY ASSURANCE

A. Mockups: Apply mockups of each coating system indicated to verify preliminary selections made under Sample submittals and to demonstrate aesthetic effects and set quality standards for materials and execution.

1. Architect will select one surface to represent surfaces and conditions for application of each coating system.

a. Wall and Ceiling Surfaces: Provide samples of at least 100 sq. ft. (9 sq. m).
b. Other Items: Architect will designate items or areas required.

2. Final approval of color selections will be based on mockups.

a. If preliminary color selections are not approved, apply additional mockups of additional colors selected by Architect at no added cost to Owner.

3. Approval of mockups does not constitute approval of deviations from the Contract Documents contained in mockups unless Architect specifically approves such deviations in writing.
4. Subject to compliance with requirements, approved mockups may become part of the completed Work if undisturbed at time of Substantial Completion.

1.7 DELIVERY, STORAGE, AND HANDLING

A. Store materials not in use in tightly covered containers in well-ventilated areas with ambient temperatures continuously maintained at not less than 45 deg F (7 deg C).

1. Maintain containers in clean condition, free of foreign materials and residue.
2. Remove rags and waste from storage areas daily.

1.8 FIELD CONDITIONS

A. Apply coatings only when temperature of surfaces to be coated and ambient air temperatures are between 50 and 95 deg F (10 and 35 deg C).

B. Do not apply coatings when relative humidity exceeds 85 percent; at temperatures less than 5 deg F (3 deg C) above the dew point; or to damp or wet surfaces.

C. Do not apply exterior coatings in snow, rain, fog, or mist.

PART 2 - PRODUCTS

2.1 MANUFACTURERS

A. Manufacturers: Subject to compliance with requirements, provide products by one of the following:

1. Benjamin Moore & Co.
2. Dulux (formerly ICI Paints); a brand of AkzoNobel.
3. PPG Paints.
4. Sherwin-Williams Company (The).

B. Products: Subject to compliance with requirements, provide one of the products listed in the Exterior High-Performance Coating Schedule or Interior High-Performance Coating Schedule for the coating category indicated.

2.2 HIGH-PERFORMANCE COATINGS, GENERAL

A. MPI Standards: Products shall comply with MPI standards indicated and shall be listed in its "MPI Approved Products Lists."

B. Material Compatibility:

1. Materials for use within each paint system shall be compatible with one another and substrates indicated, under conditions of service and application as demonstrated by manufacturer, based on testing and field experience.
2. For each coat in a paint system, products shall be recommended in writing by topcoat manufacturers for use in paint system and on substrate indicated.
3. Products shall be of same manufacturer for each coat in a coating system.

C. Colors: As selected by Architect from manufacturer's full range.

PART 3 - EXECUTION

3.1 EXAMINATION

A. Examine substrates and conditions, with Applicator present, for compliance with requirements for maximum moisture content and other conditions affecting performance of the Work.

B. Verify suitability of substrates, including surface conditions and compatibility, with existing finishes and primers.

C. Proceed with coating application only after unsatisfactory conditions have been corrected.

1. Application of coating indicates acceptance of surfaces and conditions.

3.2 PREPARATION

A. Comply with manufacturer's written instructions and recommendations in "MPI Architectural Painting Specification Manual" applicable to substrates and coating systems indicated.

B. Remove hardware, covers, plates, and similar items already in place that are removable and are not to be painted. If removal is impractical or impossible because of size or weight of item, provide surface-applied protection before surface preparation and painting.

1. After completing painting operations, use workers skilled in the trades involved to reinstall items that were removed. Remove surface-applied protection if any.

C. Clean substrates of substances that could impair bond of coatings, including dust, dirt, oil, grease, and incompatible paints and encapsulants.

1. Remove incompatible primers and reprime substrate with compatible primers or apply tie coat as required to produce coating systems indicated.

D. Steel Substrates: Remove rust, loose mill scale, and shop primer if any. Clean using methods recommended in writing by paint manufacturer, but not less than the following:

1. At Stair A134: SSPC-SP 7/NACE No. 4.
2. Typical cleaning unless otherwise indicated: SSPC-SP 6/NACE No. 3.

E. Shop-Primed Steel Substrates: Clean field welds, bolted connections, and areas where shop paint is abraded. Paint exposed areas with the same material as used for shop priming to comply with SSPC-PA 1 for touching up shop-primed surfaces.

F. Galvanized-Metal Substrates: Remove grease and oil residue from galvanized sheet metal by mechanical methods to produce clean, lightly etched surfaces that promote adhesion of subsequently applied coatings.

3.3 APPLICATION

A. Apply high-performance coatings according to manufacturer's written instructions and recommendations in "MPI Architectural Painting Specification Manual."

1. Use applicators and techniques suited for coating and substrate indicated.
2. Coat surfaces behind movable equipment and furniture same as similar exposed surfaces. Before final installation, coat surfaces behind permanently fixed equipment or furniture with prime coat only.
3. Coat backsides of access panels, removable or hinged covers, and similar hinged items to match exposed surfaces.
4. Do not apply coatings over labels of independent testing agencies or equipment name, identification, performance rating, or nomenclature plates.

B. Tint each undercoat a lighter shade to facilitate identification of each coat if multiple coats of the same material are to be applied. Tint undercoats to match color of finish coat, but provide sufficient difference in shade of undercoats to distinguish each separate coat.

C. If undercoats or other conditions show through final coat, apply additional coats until cured film has a uniform coating finish, color, and appearance.

D. Apply coatings to produce surface films without cloudiness, spotting, holidays, laps, brush marks, runs, sags, ropiness, or other surface imperfections. Produce sharp glass lines and color breaks.

3.4 FIELD QUALITY CONTROL

A. Dry Film Thickness Testing: Owner may engage the services of a qualified testing and inspecting agency to inspect and test coatings for dry film thickness.

1. Contractor shall touch up and restore coated surfaces damaged by testing.
2. If test results show that dry film thickness of applied coating does not comply with coating manufacturer's written recommendations, Contractor shall pay for testing and apply additional coats as needed to provide dry film thickness that complies with coating manufacturer's written recommendations.

3.5 CLEANING AND PROTECTION

A. At end of each workday, remove rubbish, empty cans, rags, and other discarded materials from Project site.

B. After completing coating application, clean spattered surfaces. Remove spattered coatings by washing, scraping, or other methods. Do not scratch or damage adjacent finished surfaces.

C. Protect work of other trades against damage from coating operation. Correct damage to work of other trades by cleaning, repairing, replacing, and recoating, as approved by Architect, and leave in an undamaged condition.

D. At completion of construction activities of other trades, touch up and restore damaged or defaced coated surfaces.

3.6 EXTERIOR HIGH-PERFORMANCE COATING SCHEDULE

A. Steel Substrates:

1. Pigmented Polyurethane over Self-Priming Epoxy System MPI EXT 5.1T:

a. Prime Coat: Epoxy, high build, self-priming, MPI #120.

1) Sherwin-Williams; Macropoxy 646 Fast Cure Epoxy B58W00610.

b. Intermediate Coat: Polyurethane, two component, pigmented, matching topcoat.
c. Topcoat: Polyurethane, two component, pigmented, gloss (MPI Gloss Level 6), MPI #72.

1) Sherwin-Williams; Acrolon 218 HS B65W611 / B65V600.

B. Galvanized-Metal Substrates:

1. Pigmented Polyurethane over Epoxy Primer System MPI EXT 5.3L:

a. Prime Coat: Primer, epoxy, anti-corrosive, for metal, MPI #101.

1) Sherwin-Williams; Dura-Plate 235 Multi-Purpose Epoxy BW67W235 / B67V235.

b. Intermediate Coat: Polyurethane, two component, pigmented, gloss matching topcoat.
c. Topcoat: Polyurethane, two component, pigmented, gloss (MPI Gloss Level 6), MPI #72.

1) Sherwin-Williams; Acrolon 218 HS B65W611 / B65V600.

3.7 INTERIOR HIGH-PERFORMANCE COATING SCHEDULE

A. Steel Substrates:

1. Pigmented Polyurethane over Self-Priming Epoxy System MPI INT 5.1U:

a. Prime Coat: Epoxy, high build, self-priming, MPI #120.

1) Sherwin-Williams; Macropoxy 646 Fast Cure Epoxy B58W00610.

b. Intermediate Coat: Polyurethane, two component, pigmented, matching topcoat.
c. Topcoat: Polyurethane, two component, pigmented, gloss (MPI Gloss Level 6), MPI #72.

1) Sherwin-Williams; Acrolon 218 HS B65W611 / B65V600.

B. Galvanized-Metal Substrates:

1. High Performance Architectural Latex MPI INT 5.3M:

a. Prime Coat: Primer, waterborne galvanized, MPI #134.

1) Sherwin-Williams; DTM Acrylic Primer B66W00011.
2) Sherwin-Williams; Pro-Cryl Universal Primer B66W310.

b. Intermediate Coat: Latex, high-performance architectural matching topcoat.
c. Topcoat: Latex, high-performance architectural latex, MPI #141.

1) Sherwin-Williams; Pre-catalyzed Watervased Epoxy Semi-Gloss K46W00151.
2) Sherwin-Williams; Acrylic Semi-Gloss Coating B66W00651.

END OF SECTION 099600

SECTION 101100 - VISUAL DISPLAY UNITS

PART 1 - GENERAL

1.1 RELATED DOCUMENTS

A. Drawings and general provisions of the Contract, including General and Supplementary Conditions and Division 01 Specification Sections, apply to this Section.

1.2 SUMMARY

A. Section Includes:

1. Visual display board assemblies.
2. Display rails.

B. Related Requirements:

1. Section 101200 "Display Cases" for individually framed and enclosed, wall-mounted bulletin boards and for tackboards within display cases.

1.3 ACTION SUBMITTALS

A. Product Data: For each type of product.

1. Include construction details, material descriptions, dimensions of individual components and profiles, finishes, and accessories for visual display units.

B. Shop Drawings: For visual display units.

1. Include plans, elevations, sections, details, and attachment to other work.
2. Show locations of panel joints.
3. Include sections of typical trim members.

C. Samples for Initial Selection: For each type of visual display unit indicated, for units with factory-applied color finishes, and as follows:

1. Samples of facings for each visual display panel type, indicating color and texture.
2. Fabric swatches of fabric facings for tackboards.
3. Actual factory-finish color samples, applied to aluminum substrate.
4. Include accessory Samples to verify color selected.

D. Samples for Verification: For each type of visual display unit indicated.

1. Visual Display Panel: Not less than 8-1/2 by 11 inches (215 by 280 mm), with facing, core, and backing indicated for final Work. Include one panel for each type, color, and texture required.
2. Trim: 6-inch- (150-mm-) long sections of each trim profile.
3. Display Rail: 6-inch- (150-mm-) long section of each type.
4. Accessories: Full-size Sample of each type of accessory.

1.4 INFORMATIONAL SUBMITTALS

A. Qualification Data: For qualified Installer.

B. Product Test Reports: Based on evaluation of comprehensive tests performed by a qualified testing agency, for surface-burning characteristics of tackboards.

1.5 CLOSEOUT SUBMITTALS

A. Maintenance Data: For visual display units to include in maintenance manuals.

1.6 QUALITY ASSURANCE

A. Installer Qualifications: An entity that employs installers and supervisors who are trained and approved by manufacturer.

1.7 DELIVERY, STORAGE, AND HANDLING

A. Deliver factory-fabricated visual display units completely assembled in one piece. If dimensions exceed maximum manufactured unit size, or if unit size is impracticable to ship in one piece, provide two or more pieces with joints in locations indicated on approved Shop Drawings.

1.8 PROJECT CONDITIONS

A. Environmental Limitations: Do not deliver or install visual display units until spaces are enclosed and weathertight, wet-work in spaces is complete and dry, work above ceilings is complete, and temporary HVAC system is operating and maintaining ambient temperature and humidity conditions at occupancy levels during the remainder of the construction period.

B. Field Measurements: Verify actual dimensions of construction contiguous with visual display units by field measurements before fabrication.

1. Allow for trimming and fitting where taking field measurements before fabrication might delay the Work.

1.9 WARRANTY

A. Special Warranty for Porcelain-Enamel Face Sheets: Manufacturer agrees to repair or replace porcelain-enamel face sheets that fail in materials or workmanship within specified warranty period.

1. Failures include, but are not limited to, the following:

a. Surfaces lose original writing and erasing qualities.
b. Surfaces exhibit crazing, cracking, or flaking.

2. Warranty Period: 50 years from date of Substantial Completion.
3. Warranty Period: Life of the building.

PART 2 - PRODUCTS

2.1 MANUFACTURERS

A. Source Limitations: Obtain each type of visual display unit from single source from single manufacturer.

2.2 PERFORMANCE REQUIREMENTS

A. Surface-Burning Characteristics: Comply with ASTM E 84; testing by a qualified testing agency. Identify products with appropriate markings of applicable testing agency.

1. Flame-Spread Index: 25 or less.
2. Smoke-Developed Index: 450 or less.

2.3 VISUAL DISPLAY BOARD ASSEMBLY ("**MB**", "**TB**")

A. Basis-of-Design Product: Subject to compliance with requirements, provide PolyVision Corporation; a^3 CeramicSteel Sans , or a comparable product by one of the following:

1. AARCO Products, Inc.
2. ADP Lemco.
3. Claridge Products and Equipment, Inc.
4. Platinum Visual Systems.

B. Visual Display Board Assembly: Factory fabricated.

1. Assembly: Markerboard and tackboard.
2. Corners: Square.
3. Width: As indicated on Drawings.
4. Height: As indicated on Drawings.
5. Mounting Method: Direct to wall.

C. Markerboard Panel: Porcelain-enamel-faced markerboard panel on core indicated.

1. Color: White.

D. Tackboard Panel: Vinyl-fabric-faced tackboard panel on core indicated.

1. Fabric Wrapped Edge: Wrap edge of tackboard panel with fabric facing.
2. Color and Pattern: As selected by Architect from full range of industry colors.

E. Aluminum Frames and Trim: Fabricated from not less than 0.062-inch- (1.57-mm-) thick, extruded aluminum; standard size and shape.

1. Aluminum Finish: Clear anodic finish.

F. Joints: Make joints only where total length exceeds maximum manufactured length. Fabricate with minimum number of joints, as indicated on approved Shop Drawings.

G. Chalktray: Manufacturer's standard; continuous.

1. Box Type: Extruded aluminum with slanted front, grooved tray, and cast-aluminum end closures.

H. Display Rail: Manufacturer's standard, extruded-aluminum display rail with plastic-impregnated-cork insert, end stops, and continuous paper holder, designed to hold accessories.

1. Size: 1 inch (25 mm) high by full length of visual display unit.
2. Map Hooks and Clips: Two map hooks with flexible metal clips for every 48 inches (1200 mm) of display rail or fraction thereof.
3. Flag Holder: One for each room.
4. Tackboard Insert Color: As selected by Architect from full range of industry colors.
5. Aluminum Color: Match finish of visual display assembly trim.
6. Location: Tackboards.

2.4 DISPLAY RAILS

A. Basis-of-Design Product: Subject to compliance with requirements, provide PolyVision Corporation; a^3 CeramicSteel Sans , or a comparable product by one of the following:

1. AARCO Products, Inc.
2. ADP Lemco.
3. Claridge Products and Equipment, Inc.
4. Platinum Visual Systems.

B. Aluminum Display Rail: Manufacturer's standard, extruded-aluminum display rail with plastic-impregnated-cork tackable insert.

C. Tackable Insert Color: As selected by Architect from full range of industry colors.

D. Size: 1 inch (25 mm) high by length indicated on Drawings.

E. End Stops: Aluminum.

2.5 MARKERBOARD PANELS

A. Porcelain-Enamel Markerboard Panels: Balanced, high-pressure, factory-laminated markerboard assembly of three-ply construction, consisting of moisture-barrier backing, core material, and porcelain-enamel face sheet with high-gloss finish. Laminate panels under heat and pressure with manufacturer's standard, flexible waterproof adhesive.

1. Face Sheet Thickness: 0.021 inch (0.53 mm) uncoated base metal thickness.
2. Particleboard Core: 1/2 inch (13 mm) thick; with 0.005-inch- (0.127-mm-) thick, aluminum foil backing.
3. Laminating Adhesive: Manufacturer's standard moisture-resistant thermoplastic type.

2.6 TACKBOARD PANELS

A. Tackboard Panels:

1. Facing: Vinyl fabric.
2. Core: Manufacturer's standard.

2.7 MATERIALS

A. Porcelain-Enamel Face Sheet: PEI-1002, with face sheet manufacturer's standard two- or three-coat process.

B. Natural-Cork Sheet: Seamless, single-layer, compressed fine-grain cork sheet; bulletin board quality; face sanded for natural finish with surface-burning characteristics indicated.

C. Vinyl Fabric: Mildew resistant, washable, complying with FS CCC-W-408D, Type II, burlap weave; weighing not less than 13 oz./sq. yd. (440 g/sq. m); with surface-burning characteristics indicated.

D. Hardboard: ANSI A135.4, tempered.

E. Particleboard: ANSI A208.1, Grade M-1.

F. Medium-Density Fiberboard: ANSI A208.2, Grade 130.

G. Fiberboard: ASTM C 208 cellulosic fiber insulating board.

H. Extruded Aluminum: ASTM B 221 (ASTM B 221M), Alloy 6063.

I. Adhesives for Field Application: Mildew-resistant, nonstaining adhesive for use with specific type of panels, sheets, or assemblies; and for substrate application; as recommended in writing by visual display unit manufacturer.

J. Primer/Sealer: Mildew-resistant primer/sealer complying with requirements in Section 099123 "Interior Painting" and recommended in writing by visual display unit manufacturer for intended substrate.

2.8 GENERAL FINISH REQUIREMENTS

A. Comply with NAAMM's "Metal Finishes Manual for Architectural and Metal Products" for recommendations for applying and designating finishes.

B. Protect mechanical finishes on exposed surfaces from damage by applying a strippable, temporary protective covering before shipping.

C. Appearance of Finished Work: Noticeable variations in same piece are unacceptable. Variations in appearance of adjoining components are acceptable if they are within the range of approved Samples and are assembled or installed to minimize contrast.

2.9 ALUMINUM FINISHES

A. Clear Anodic Finish: AAMA 611, AA-M12C22A31, Class II, 0.010 mm or thicker.

PART 3 - EXECUTION

3.1 EXAMINATION

A. Examine substrates and conditions, with Installer present, for compliance with requirements for installation tolerances, surface conditions of wall, and other conditions affecting performance of the Work.

B. Examine roughing-in for electrical power systems to verify actual locations of connections before installation of motorized, sliding visual display units.

C. Examine walls and partitions for proper preparation and backing for visual display units.

D. Examine walls and partitions for suitable framing depth where sliding visual display units will be installed.

E. Proceed with installation only after unsatisfactory conditions have been corrected.

3.2 PREPARATION

A. Comply with manufacturer's written instructions for surface preparation.

B. Clean substrates of substances, such as dirt, mold, and mildew, that could impair the performance of and affect the smooth, finished surfaces of visual display boards.

C. Prepare surfaces to achieve a smooth, dry, clean surface free of flaking, unsound coatings, cracks, defects, projections, depressions, and substances that will impair bond between visual display units and wall surfaces.

D. Prime wall surfaces indicated to receive visual display units and as recommended in writing by primer/sealer manufacturer and visual display unit manufacturer.

E. Prepare recesses for sliding visual display units as required by type and size of unit.

3.3 INSTALLATION

A. General: Install visual display surfaces in locations and at mounting heights indicated on Drawings, or if not indicated, at heights indicated below. Keep perimeter lines straight, level, and plumb. Provide grounds, clips, backing materials, adhesives, brackets, anchors, trim, and accessories necessary for complete installation.

B. Field-Assembled Visual Display Board Assemblies: Coordinate field-assembled units with grounds, trim, and accessories indicated. Join parts with a neat, precision fit.

1. Make joints only where total length exceeds maximum manufactured length. Fabricate with minimum number of joints, as indicated on approved Shop Drawings.
2. Where size of visual display board assemblies or other conditions require support in addition to normal trim, provide structural supports or modify trim as indicated or as selected by Architect from manufacturer's standard structural support accessories to suit conditions indicated.

C. Factory-Fabricated Visual Display Board Assemblies: Adhere to wall surfaces with egg-size adhesive gobs at 16 inches (400 mm) o.c., horizontally and vertically.

D. Factory-Fabricated Visual Display Board Assemblies: Attach concealed clips, hangers, and grounds to wall surfaces and to visual display board assemblies with fasteners at not more than 16 inches (400 mm) o.c. Secure tops and bottoms of boards to walls.

E. Natural-Slate Chalkboards: Align and level joints between adjoining panels, and apply manufacturer's recommended joint-filler compound. Hone and finish joints to continuous even plane.

F. Visual Display Board Assembly Mounting Heights: Install visual display units at mounting heights indicated on Drawings, or if not indicated, at heights indicated below.

1. Mounting Height for Grades K through 3: 24 inches (610 mm) above finished floor to top of chalktray.
2. Mounting Height for Grades 4 through 6: 28 inches (711 mm) above finished floor to top of chalktray.
3. Mounting Height for Grades 7 and Higher: 36 inches (914 mm) above finished floor to top of chalktray.

G. Display Rails: Install rails at mounting heights indicated on Drawings, or if not indicated, at height indicated below. Attach to wall surface with fasteners at not more than 16 inches (400 mm) o.c.

1. Mounting Height: 48 inches (1219 mm) above finished floor to top of rail.

3.4 CLEANING AND PROTECTION

A. Clean visual display units according to manufacturer's written instructions. Attach one removable cleaning instructions label to visual display unit in each room.

B. Touch up factory-applied finishes to restore damaged or soiled areas.

C. Cover and protect visual display units after installation and cleaning.

END OF SECTION 101100

SECTION 101200 - DISPLAY CASES

PART 1 - GENERAL

1.1 RELATED DOCUMENTS

A. Drawings and general provisions of the Contract, including General and Supplementary Conditions and Division 01 Specification Sections, apply to this Section.

1.2 SUMMARY

A. Section Includes:

1. Bulletin boards.
2. Display cases.

B. Related Requirements:

1. Section 101100 "Visual Display Units" for tackboards.

1.3 DEFINITIONS

A. Bulletin Board: Glazed cabinet with tackboard panel, without shelves, typically of shallow depth for display of paper documents.

B. Display Case: Glazed cabinet with tackboard panel back surface and adjustable shelves.

C. Tackboard Panel: A material for holding push-pins or tacks typically consisting of a facing; such as fabric, vinyl, or cork; adhered to a substrate; such as fiberboard, hardboard, particleboard.

1.4 ACTION SUBMITTALS

A. Product Data: For each type of product.

1. Include construction details, material descriptions, dimensions of individual components and profiles, and finishes for display cases and bulletin boards. Include furnished specialties and accessories.
2. Include electrical characteristics for illuminated display cases**.**

B. Shop Drawings: For display cases and bulletin boards.

1. Include plans, elevations, sections, and attachment details.
2. Show location of seams and joints in tackboard panels.
3. Include sections of typical trim members.
4. Include diagrams for wiring of illuminated display cases.

C. Samples for Initial Selection: For each type of exposed finish.

1. Include Samples of tackboard panels and factory-finished trim involving color finish selection.

D. Samples for Verification: For each type of exposed finish for the following.

1. Tackboard Panel: Not less than 8-1/2 by 11 inches (215 by 280 mm), with facing and substrate indicated for final Work. Include one panel for each type, color, and texture required.
2. Trim: 6-inch- (150-mm-) long sections of each trim profile including corner section.

1.5 INFORMATIONAL SUBMITTALS

A. Product Test Reports: For fabrics and tackboard panels, for tests performed by a qualified testing agency.

1.6 CLOSEOUT SUBMITTALS

A. Maintenance Data: For display cases and bulletin boards to include in maintenance manuals.

1.7 PROJECT CONDITIONS

A. Environmental Limitations: Do not deliver or install display cases and bulletin boards for indoor installations until spaces are enclosed and weathertight, wet-work in spaces is complete and dry, work above ceilings is complete, and temporary HVAC system is operating and maintaining ambient temperature and humidity conditions at occupancy levels during the remainder of the construction period.

B. Field Measurements: Verify actual dimensions of openings for display cases and bulletin boards by field measurements before fabrication.

PART 2 - PRODUCTS

2.1 MANUFACTURERS

A. Source Limitations: Obtain display cases and bulletin boards from single source from single manufacturer.

2.2 PERFORMANCE REQUIREMENTS

A. Surface-Burning Characteristics: Comply with ASTM E 84; testing by a qualified testing agency. Identify products with appropriate markings of applicable testing agency.

1. Flame-Spread Index: 75 or less.
2. Smoke-Developed Index: 450 or less.

B. Electrical Components: Listed and labeled as defined in NFPA 70, by a qualified testing agency, and marked for intended location and application.

2.3 BULLETIN BOARD (**BB-1**)

A. Basis-of-Design Product: Subject to compliance with requirements, provide Claridge Products and Equipment, Inc.; Contemporary Series Bulletin Board Cabinet 2046 and 2050 or a comparable product by one of the following:

1. AARCO Products, Inc.
2. ADP Lemco.
3. Platinum Visual Systems.

B. General: Factory-fabricated unit consisting of manufacturer's standard wall-mounted cabinet with tackboard panel on back inside surface and operable glazed doors at front.

1. Frame and Cabinet Profile: Square frame section with square cabinet corners.
2. Mounting: Recessed.
3. Size: As indicated on Drawings.
4. Size: 48 inches (1219 mm) wide by 48 inches (1219 mm) high by 3 inches (76 mm) deep.

C. Aluminum-Framed Cabinet: Extruded aluminum; with clear anodic finish.

D. Glazed Hinged Doors: Tempered glass; set in frame matching cabinet material and finish. Equip each door with full-height continuous hinge and cylinder lock with two keys.

1. Thickness: Not less than 6 mm thick.
2. Number of Doors: Two.

E. Back Panel: Vinyl-fabric-faced tackboard panel.

2.4 DISPLAY CASE (**DC-1**)

A. Basis-of-Design Product: Subject to compliance with requirements, provide Claridge Products and Equipment, Inc.; Recessed Display Case #374 or a comparable product by one of the following:

1. AARCO Products, Inc.
2. ADP Lemco.
3. Platinum Visual Systems.

B. Recessed Display Case: Factory-fabricated display case; with finished interior, operable glazed doors at front, and trim on face to cover edge of recessed opening.

1. Display Case Cabinet: Extruded aluminum.
2. Face Frame: Aluminum.
3. Aluminum Finish: Clear anodic.

C. Glazed Sliding Doors: Tempered glass; unframed; with extruded-aluminum top and bottom track; supported on nylon or ball-bearing rollers; with plastic top guide and rubber bumpers. Equip each door with ground finger pull and adjustable cylinder lock with two keys.

1. Thickness: Not less than 6 mm thick.
2. Number of Doors: Two pairs.

D. Shelves: 6-mm-thick tempered glass; supported on adjustable shelf standards and supports.

1. Shelf Depth: 6 inches (150 mm).
2. Number of Shelves: Three.

E. Adjustable Shelf Standards and Supports: BHMA A156.9, B04102; with shelf brackets, B04112; recess mounted in rear surface. Provide standards extending full height of display case.

F. Back Panel: Vinyl-fabric-faced tackboard panel.

1. Color: As selected by Architect from manufacturer's full range.

G. Illumination System: Concealed top-lighting system consisting of LED- or fluorescent-strip fixtures. Include lamps and internal wiring with single concealed electrical connection to building system. Coordinate electrical characteristics with power supply provided.

1. Ballasts: Low-temperature, high-power-factor, low-energy, fluorescent lamp ballasts that comply with Certified Ballast Manufacturers Association standards and carry its label.

a. Electrical Characteristics: Single phase, 277 volts.

H. Size: 96 inches (2400 mm) wide, by 48 inches (1200 mm) high, by 12 inches (300 mm) deep.

2.5 TACKBOARD PANELS

A. Vinyl-Fabric-Faced Tackboard Panel: 1/4-inch- (6-mm-) thick, vinyl-fabric-faced-cork sheet factory laminated to 1/4-inch- (6-mm-) thick hardboard or particleboard backing.

2.6 MATERIALS

A. Hardboard: ANSI A135.4, tempered.

B. Fiberboard: ASTM C 208.

C. Particleboard: ANSI A208.1, Grade M-1.

D. Hardwood Plywood: HPVA HP-1.

E. Vinyl Fabric: FS CCC-W-408D, Type II, burlap weave; weighing not less than 13 oz./sq. yd. (440 g/sq. m); with flame-spread index of 25 or less when tested according to ASTM E 84.

F. Extruded-Aluminum Bars and Shapes: ASTM B 221 (ASTM B 221M), Alloy 6063.

G. Aluminum Tubing: ASTM B 429/B 429M, Alloy 6063.

H. Clear Tempered Glass: ASTM C 1048, Kind FT, Condition A, Type I, Class 1, Quality Q3, with exposed edges seamed before tempering.

I. High-Pressure Plastic Laminate: NEMA LD 3.

J. Fasteners: Provide screws, bolts, and other fastening devices made from same material as items being fastened, except provide hot-dip galvanized, stainless-steel, or aluminum fasteners for exterior applications. Provide types, sizes, and lengths to suit installation conditions. Use security fasteners where exposed to view.

2.7 FABRICATION

A. Fabricate bulletin boards and display cases to requirements indicated for dimensions, design, and thickness and finish of materials.

B. Use metals and shapes of thickness and reinforcing required to produce flat surfaces, and to impart strength for size, design, and application indicated.

C. Fabricate cabinets and door frames with reinforced corners, mitered to a hairline fit, with no exposed fasteners.

D. Fabricate shelf standards plumb and at heights to align shelf brackets for level shelves.

2.8 GENERAL FINISH REQUIREMENTS

A. Comply with NAAMM's "Metal Finishes Manual for Architectural and Metal Products" for recommendations for applying and designating finishes.

B. Protect mechanical finishes on exposed surfaces from damage by applying a strippable, temporary protective covering before shipping.

C. Appearance of Finished Work: Noticeable variations in same piece are unacceptable. Variations in appearance of adjoining components are acceptable if they are within the range of approved Samples and are assembled or installed to minimize contrast.

2.9 ALUMINUM FINISHES

A. Clear Anodic Finish: AAMA 611, AA-M12C22A31, Class II, 0.010 mm or thicker.

PART 3 - EXECUTION

3.1 EXAMINATION

A. Examine walls, with Installer present, for compliance with requirements for installation tolerances, surface conditions of wall, and other conditions affecting performance of the Work.

B. Examine roughing-in for electrical power systems to verify actual locations of connections before installation of illuminated units.

C. Examine walls and partitions for proper backing for bulletin boards and display cases.

D. Examine walls and partitions for suitable framing depth if recessed units will be installed.

E. Proceed with installation only after unsatisfactory conditions have been corrected.

3.2 PREPARATION

A. Prepare recesses for display cases as required by type and size of unit.

3.3 INSTALLATION

A. General: Install units in locations and at mounting heights indicated on Drawings, or if not indicated, at heights indicated below. Keep perimeter lines straight, level, and plumb. Provide grounds, clips, backing materials, adhesives, brackets, anchors, trim, and accessories necessary for complete installation.

1. Mounting Height: 84 inches (2134 mm) above finished floor to top of cabinet.

B. Bulletin Boards: Attach units to wall surfaces with concealed clips, hangers, or grounds.

C. Recessed Display Cases: Attach units to wall framing with fasteners at not more than 16 inches (400 mm) o.c. Attach aluminum trim over edges of recessed display cases and conceal grounds and clips. Attach trim with fasteners at not more than 24 inches (600 mm) o.c.

D. Comply with requirements specified elsewhere for connecting illuminated display cases.

E. Install display case shelving level and straight.

3.4 ADJUSTING AND CLEANING

A. Adjust doors to operate smoothly without warp or bind and so contact points meet accurately. Lubricate operating hardware as recommended by manufacturer.

B. Touch up factory-applied finishes to restore damaged areas.

END OF SECTION 101200

SECTION 101416 - PLAQUES

PART 1 - GENERAL

1.1 RELATED DOCUMENTS

A. Drawings and general provisions of the Contract, including General and Supplementary Conditions and Division 01 Specification Sections, apply to this Section.

1.2 SUMMARY

A. Section includes metal plaques.

1.3 DEFINITIONS

A. Accessible: In accordance with the accessibility standard.

1.4 ACTION SUBMITTALS

A. Product Data: For each type of product.

B. Shop Drawings: For plaques.

1. Include fabrication and installation details and attachments to other work.
2. Show plaque mounting heights, locations of supplementary supports to be provided by other installers, and accessories.

C. Samples for Initial Selection: For each type of plaque, exposed component, and exposed finish.

1. Include representative Samples of available typestyles and graphic symbols.

D. Samples for Verification: For each type of plaque showing all components and with the required finish(es), in manufacturer's standard size unless otherwise indicated and as follows:

1.5 CLOSEOUT SUBMITTALS

A. Maintenance Data: For plaques to include in maintenance manuals.

PART 2 - PRODUCTS

2.1 PERFORMANCE REQUIREMENTS

A. Accessibility Standard: Comply with applicable provisions in the USDOJ's "2010 ADA Standards for Accessible Design" and ICC A117.1.

2.2 PLAQUES

A. Cast Plaque: Cast-metal plaque with background texture, border, and characters having uniform faces, sharp corners, and precisely formed lines and profiles; and as follows:

1. Manufacturers: Subject to compliance with requirements, provide products by one of the following:

   a. A.R.K. Ramos.
   b. Alpine Signs & Lighting.
   c. Gemini Incorporated.
   d. Metal Arts.
   e. Southwell Company (The).

2. Plaque Material: Cast bronze.
3. Plaque Thickness: 0.25 inch (6.35 mm).
4. Finishes:

   a. Integral Metal Finish: As selected by Architect from full range of industry finishes.
   b. Overcoat: Manufacturer's standard baked-on clear coating.

5. Background Texture: As selected by Architect from manufacturer's full range.
6. Integrally Cast Border Style: Raised flat band, with square corner accents with recessed circles.
7. Mounting: Concealed studs.
8. Text and Typeface: Typeface as selected by Architect from manufacturer's full range.
9. Design: Refer to exhibit following this Section.

2.3 MATERIALS

A. Bronze Castings: ASTM B 584, alloy recommended by manufacturer and finisher for finish indicated.

2.4 ACCESSORIES

A. Fasteners and Anchors: Manufacturer's standard as required for secure anchorage of plaques, noncorrosive and compatible with each material joined, and complying with the following:

1. Use concealed fasteners and anchors unless indicated to be exposed.
2. Plaque Mounting Fasteners:

   a. Concealed Studs: Concealed (blind), threaded studs welded or brazed to back of plaque, screwed into back of plaque, or screwed into tapped lugs cast integrally into back of plaque unless otherwise indicated.

B. Adhesive: As recommended by plaque manufacturer.

C. Bituminous Paint: Cold-applied asphalt emulsion complying with ASTM D 1187/D 1187M.

2.5 FABRICATION

A. General: Provide manufacturer's standard plaques according to requirements indicated.

1. Comply with AWS for recommended practices in welding and brazing. Provide welds and brazes behind finished surfaces without distorting or discoloring exposed side. Clean exposed welded and brazed connections of flux, and dress exposed and contact surfaces.
2. Conceal connections if possible; otherwise, locate connections where they are inconspicuous.
3. Provide rabbets, lugs, and tabs necessary to assemble components and to attach to existing work. Drill and tap for required fasteners. Use concealed fasteners where possible; use exposed fasteners that match plaque finish.
4. Castings: Fabricate castings free of warp, cracks, blowholes, pits, scale, sand holes, and other defects that impair appearance or strength. Grind, wire brush, sandblast, and buff castings to remove seams, gate marks, casting flash, and other casting marks before finishing.

2.6 GENERAL FINISH REQUIREMENTS

A. Protect mechanical finishes on exposed surfaces from damage by applying a strippable, temporary protective covering before shipping.

B. Appearance of Finished Work: Noticeable variations in same piece are not acceptable. Variations in appearance of adjoining components are acceptable if they are within the range of approved Samples and are assembled or installed to minimize contrast.

C. Directional Finishes: Run grain with long dimension of each piece and perpendicular to long dimension of finished trim or border surface unless otherwise indicated.

D. Organic, Anodic, and Chemically Produced Finishes: Apply to formed metal after fabrication but before applying contrasting polished finishes on raised features unless otherwise indicated.

2.7 CLEAR ORGANIC COATING FOR COPPER-ALLOY FINISHES

A. Clear Organic Coating: Clear, waterborne, air-drying, acrylic lacquer called "Incralac"; specially developed for coating copper-alloy products; consisting of a solution of methyl methacrylate copolymer with benzotriazole to prevent breakdown of the film in UV light; shop applied in two uniform coats according to manufacturer's written instructions, with interim drying between coats and without runs or other surface imperfections, to a total dry film thickness of 1 mil (0.025 mm).

PART 3 - EXECUTION

3.1 EXAMINATION

A. Examine substrates, areas, and conditions, with Installer present, for compliance with requirements for installation tolerances and other conditions affecting performance.

B. Verify that plaque-support surfaces are within tolerances to accommodate plaques without gaps or irregularities between backs of plaques and support surfaces unless otherwise indicated.

C. Proceed with installation only after unsatisfactory conditions have been corrected.

3.2 INSTALLATION

A. General: Install plaques using mounting methods indicated and according to manufacturer's written instructions.

1. Install plaques level, plumb, true to line, and at locations and heights indicated, with plaque surfaces free of distortion and other defects in appearance.
2. Install plaques so they do not protrude or obstruct according to the accessibility standard.
3. Before installation, verify that plaque surfaces are clean and free of materials or debris that would impair installation.
4. Corrosion Protection: Coat concealed surfaces of exterior aluminum in contact with grout, concrete, masonry, wood, or dissimilar metals, with a heavy coat of bituminous paint.

B. Mounting Methods:

1. Concealed Studs: Using a template, drill holes in substrate aligning with studs on back of plaque. Remove loose debris from hole and substrate surface.

   a. Masonry Substrates: Fill holes with adhesive. Leave recess space in hole for displaced adhesive. Place plaque in position and push until flush to surface, embedding studs in holes. Temporarily support plaque in position until adhesive fully sets.
   b. Thin or Hollow Surfaces: Place plaque in position and flush to surface, install washers and nuts on studs projecting through opposite side of surface, and tighten.

3.3 ADJUSTING AND CLEANING

A. Remove and replace damaged or deformed plaques and plaques that do not comply with specified requirements. Replace plaques with damaged or deteriorated finishes or components that cannot be successfully repaired by finish touchup or similar minor repair procedures.

B. Remove temporary protective coverings and strippable films as plaques are installed.

C. On completion of installation, clean exposed surfaces of plaques according to manufacturer's written instructions, and touch up minor nicks and abrasions in finish. Maintain plaques in a clean condition during construction and protect from damage until acceptance by Owner.

END OF SECTION 101416

Caesar Rodney School District

Caesar Rodney Elementary School

2020

Superintendent of Schools

Dr. Kevin Fitzgerald

Principal

Mrs. Jane Doe

Board of Education

Jessica Marelli, President
William Bush, Vice President
P. Scott Wilson
Mike Marasco
David Failing

Architect
Becker Morgan Group, Inc.

Contractor
To Be Determined, LLC

SECTION 101419 - DIMENSIONAL LETTER SIGNAGE

PART 1 - GENERAL

1.1 RELATED DOCUMENTS

A. Drawings and general provisions of the Contract, including General and Supplementary Conditions and Division 01 Specification Sections, apply to this Section.

1.2 SUMMARY

A. Section Includes:

1. Cast dimensional characters.
2. Support frames for dimensional letter signage.

1.3 DEFINITIONS

A. Illuminated: Illuminated by lighting source integrally constructed as part of the sign unit.

1.4 COORDINATION

A. Furnish templates for placement of electrical service embedded in permanent construction by other installers.

1.5 ACTION SUBMITTALS

A. Product Data: For each type of product.

B. Shop Drawings: For signs.

1. Include fabrication and installation details and attachments to other work.
2. Show sign mounting heights, locations of supplementary supports to be provided by other installers, and accessories.
3. Show message list, typestyles, graphic elements, and layout for each sign at least one-eighth size (1-1/2” = 1’-0”).

C. Samples for Initial Selection: For each type of sign assembly, exposed component, and exposed finish.

1. Include representative Samples of available typestyles and graphic symbols.

D. Samples for Verification: For each type of sign assembly showing all components and with the required finish(es), in manufacturer's standard size unless otherwise indicated and as follows:

1. Dimensional Characters: Full-size Sample of each type of dimensional character.
2. Exposed Accessories: Full-size Sample of each accessory type.

1.6 WARRANTY

A. Special Warranty: Manufacturer agrees to repair or replace components of signs that fail in materials or workmanship within specified warranty period.

1. Failures include, but are not limited to, the following:

a. Deterioration of finishes beyond normal weathering.
b. Separation or delamination of sheet materials and components.

2. Warranty Period: Five years from date of Substantial Completion.

PART 2 - PRODUCTS

2.1 PERFORMANCE REQUIREMENTS

A. Structural Performance: Signs and supporting elements shall withstand the effects of gravity and other loads within limits and under conditions indicated.

1. Uniform Wind Load: As indicated on Drawings.
2. Concentrated Horizontal Load: As indicated on Drawings.
3. Other Design Load: As indicated on Drawings.
4. Uniform and concentrated loads need not be assumed to act concurrently.

2.2 DIMENSIONAL CHARACTERS

A. Cast Characters: Characters with uniform faces, sharp corners, and precisely formed lines and profiles, and as follows:

1. Manufacturers: Subject to compliance with requirements, provide products by one of the following:

a. ACE Sign Systems, Inc.
b. A.R.K. Ramos.
c. ASI Signage Innovations, Inc.
d. Gemini Incorporated.
e. Impact Signs.

2. Character Material: Cast aluminum.
3. Character Height: As indicated on Drawings.
4. Thickness: 2 inches, or as indicated on drawings.
5. Finishes: Up to three colors as selected by Architect from the following:

a. Integral Aluminum Finish: Clear anodized or anodized color as selected by Architect from full range of industry colors and color densities.
b. Baked-Enamel or Powder-Coat Finish: Manufacturer's standard, in color as selected by Architect from manufacturer's full range.

6. Mounting: Provide mounting as indicated on Drawings and as follows:

a. Projecting studs, providing a 2” offset from building face.
b. Base mounting to frame.

7. Typeface: Perpetua Bold.

2.3 DIMENSIONAL CHARACTER MATERIALS

A. Aluminum Castings: ASTM B 26/B 26M, alloy and temper recommended by sign manufacturer for casting process used and for type of use and finish indicated.

B. Aluminum Sheet and Plate: ASTM B 209 (ASTM B 209M), alloy and temper recommended by aluminum producer and finisher for type of use and finish indicated.

C. Aluminum Extrusions: ASTM B 221 (ASTM B 221M), alloy and temper recommended by aluminum producer and finisher for type of use and finish indicated.

D. Paints and Coatings for Sheet Materials: Inks, dyes, and paints that are recommended by manufacturer for optimum adherence to surface and are UV and water resistant for colors and exposure indicated.

2.4 ACCESSORIES

A. Fasteners and Anchors: Manufacturer's standard as required for secure anchorage of signs, noncorrosive and compatible with each material joined, and complying with the following:

1. Use concealed fasteners and anchors unless indicated to be exposed.
2. For exterior exposure, furnish stainless-steel devices unless otherwise indicated.
3. Exposed Metal-Fastener Components, General:

    a. Fabricated from same basic metal and finish of fastened metal unless otherwise indicated.
    b. Fastener Heads: For nonstructural connections, use flathead or oval countersunk screws and bolts with tamper-resistant Allen-head slots unless otherwise indicated.

4. Sign Mounting Fasteners:

    a. Concealed Studs: Concealed (blind), threaded studs welded or brazed to back of sign material, screwed into back of sign assembly, or screwed into tapped lugs cast integrally into back of cast sign material, unless otherwise indicated.

B. Adhesive: As recommended by sign manufacturer.

C. Bituminous Paint: Cold-applied asphalt emulsion complying with ASTM D 1187/D 1187M.

2.5 FABRICATION

A. General: Provide manufacturer's standard sign assemblies according to requirements indicated.

1. Preassemble signs and assemblies in the shop to greatest extent possible. Disassemble signs and assemblies only as necessary for shipping and handling limitations. Clearly mark units for reassembly and installation; apply markings in locations concealed from view after final assembly.
2. Mill joints to a tight, hairline fit. Form assemblies and joints exposed to weather to resist water penetration and retention.
3. Comply with AWS for recommended practices in welding and brazing. Provide welds and brazes behind finished surfaces without distorting or discoloring exposed side. Clean exposed welded and brazed connections of flux, and dress exposed and contact surfaces.
4. Conceal connections if possible; otherwise, locate connections where they are inconspicuous.

5. Internally brace dimensional characters for stability, to meet structural performance loading without oil-canning or other surface deformation, and for securing fasteners.
6. Provide rabbets, lugs, and tabs necessary to assemble components and to attach to existing work. Drill and tap for required fasteners. Use concealed fasteners where possible; use exposed fasteners that match sign finish.
7. Castings: Fabricate castings free of warp, cracks, blowholes, pits, scale, sand holes, and other defects that impair appearance or strength. Grind, wire brush, sandblast, and buff castings to remove seams, gate marks, casting flash, and other casting marks before finishing.

B. Brackets: Fabricate brackets, fittings, and hardware for bracket-mounted signs to suit sign construction and mounting conditions indicated. Modify manufacturer's standard brackets as required.

1. Aluminum Brackets: Factory finish brackets with baked-enamel or powder-coat finish in color as selected by Architect from manufacturer’s full range.

2.6 GENERAL FINISH REQUIREMENTS

A. Protect mechanical finishes on exposed surfaces from damage by applying a strippable, temporary protective covering before shipping.

B. Appearance of Finished Work: Noticeable variations in same piece are not acceptable. Variations in appearance of adjoining components are acceptable if they are within the range of approved Samples and are assembled or installed to minimize contrast.

C. Directional Finishes: Run grain with long dimension of each piece and perpendicular to long dimension of finished trim or border surface unless otherwise indicated.

D. Organic, Anodic, and Chemically Produced Finishes: Apply to formed metal after fabrication but before applying contrasting polished finishes on raised features unless otherwise indicated.

2.7 ALUMINUM FINISHES

A. Clear Anodic Finish: AAMA 611:

1. Exterior: Class I, 0.018 mm or thicker.
2. Interior: Class II, 0.010 mm or thicker.

B. Color Anodic Finish: AAMA 611:

1. Exterior: Class I, 0.018 mm or thicker.
2. Interior: Class II, 0.010 mm or thicker.

C. Baked-Enamel or Powder-Coat Finish: AAMA 2603 except with a minimum dry film thickness of 1.5 mils (0.04 mm). Comply with coating manufacturer's written instructions for cleaning, conversion coating, and applying and baking finish.

PART 3 - EXECUTION

3.1 EXAMINATION

A. Examine substrates, areas, and conditions, with Installer present, for compliance with requirements for installation tolerances and other conditions affecting performance.

B. Verify that sign-support surfaces are within tolerances to accommodate signs without gaps or irregularities between backs of signs and support surfaces unless otherwise indicated.

C. Proceed with installation only after unsatisfactory conditions have been corrected.

3.2 INSTALLATION

A. General: Install signs using mounting methods indicated and according to manufacturer's written instructions.

1. Install signs level, plumb, true to line, and at locations and heights indicated, with sign surfaces free of distortion and other defects in appearance.
2. Before installation, verify that sign surfaces are clean and free of materials or debris that would impair installation.
3. Corrosion Protection: Coat concealed surfaces of exterior aluminum in contact with grout, concrete, masonry, wood, or dissimilar metals, with a heavy coat of bituminous paint.

B. Mounting Methods:

1. Concealed Studs: Using a template, drill holes in substrate aligning with studs on back of sign. Remove loose debris from hole and substrate surface.

a. Masonry Substrates: Fill holes with adhesive. Leave recess space in hole for displaced adhesive. Place sign in position and push until flush to surface, embedding studs in holes. Temporarily support sign in position until adhesive fully sets.
b. Thin or Hollow Surfaces: Place sign in position and flush to surface, install washers and nuts on studs projecting through opposite side of surface, and tighten.

2. Back Bar and Brackets: Remove loose debris from substrate surface and install backbar or bracket supports in position, so that signage is correctly located and aligned.

3.3 ADJUSTING AND CLEANING

A. Remove and replace damaged or deformed characters and signs that do not comply with specified requirements. Replace characters with damaged or deteriorated finishes or components that cannot be successfully repaired by finish touchup or similar minor repair procedures.

B. Remove temporary protective coverings and strippable films as signs are installed.

C. On completion of installation, clean exposed surfaces of signs according to manufacturer's written instructions, and touch up minor nicks and abrasions in finish. Maintain signs in a clean condition during construction and protect from damage until acceptance by Owner.

END OF SECTION 101419

SECTION 101423 - PANEL SIGNAGE

PART 1 - GENERAL

1.1 RELATED DOCUMENTS

A. Drawings and general provisions of the Contract, including General and Supplementary Conditions and Division 01 Specification Sections, apply to this Section.

1.2 SUMMARY

A. Section Includes:

1. Panel signs.

B. Related Requirements:

1. Section 015000 "Temporary Facilities and Controls" for temporary Project identification signs and for temporary informational and directional signs.
2. Section 101463 "Electronic Message Signage" for site LED message signs.
3. Section 210500 "Common Work Results for Fire Protection" for labels, tags, and nameplates for fire protection systems and equipment.
4. Section 220553 "Identification for Plumbing Piping and Equipment" for labels, tags, and nameplates for plumbing systems and equipment.
5. Section 230553 "Identification for HVAC Piping and Equipment" for labels, tags, and nameplates for HVAC systems and equipment.
6. Section 260553 "Identification for Electrical Systems" for labels, tags, and nameplates for electrical equipment.
7. Section 265213 "Emergency and Exit Lighting" for illuminated, self-luminous, and photoluminescent exit sign units.

1.3 DEFINITIONS

A. Accessible: In accordance with the accessibility standard.

1.4 COORDINATION

A. Furnish templates for placement of sign-anchorage devices embedded in permanent construction by other installers.

1.5 ACTION SUBMITTALS

A. Product Data: For each type of product.

B. Shop Drawings: For panel signs.

1. Include fabrication and installation details and attachments to other work.

2. Show sign mounting heights, locations of supplementary supports to be provided by other installers, and accessories.
3. Show message list, typestyles, graphic elements, including raised characters and Braille, and layout for each sign at least quarter size.
4. Show locations of electrical service connections.
5. Include diagrams for power, signal, and control wiring.

C. Samples for Initial Selection: For each type of sign assembly, exposed component, and exposed finish.

1. Include representative Samples of available typestyles and graphic symbols.

D. Samples for Verification: For each type of sign assembly showing all components and with the required finish(es), in manufacturer's standard size unless otherwise indicated and as follows:

1. Panel Signs: Full-size Sample.
2. Exposed Accessories: Full-size Sample of each accessory type.
3. Full-size Samples, if approved, will be returned to Contractor for use in Project.

1.6 CLOSEOUT SUBMITTALS

A. Maintenance Data: For signs to include in maintenance manuals.

1.7 WARRANTY

A. Special Warranty: Manufacturer agrees to repair or replace components of signs that fail in materials or workmanship within specified warranty period.

1. Failures include, but are not limited to, the following:

a. Deterioration of finishes beyond normal weathering.
b. Deterioration of embedded graphic image.
c. Separation or delamination of sheet materials and components.

2. Warranty Period: Five years from date of Substantial Completion.

PART 2 - PRODUCTS

2.1 PERFORMANCE REQUIREMENTS

A. Accessibility Standard: Comply with applicable provisions in the USDOJ's "2010 ADA Standards for Accessible Design" and ICC A117.1.

B. Electrical Components, Devices, and Accessories: Listed and labeled as defined in NFPA 70, by a qualified testing agency, and marked for intended location and application.

2.2 PANEL SIGNS

A. Manufacturers: Subject to compliance with requirements, provide products by one of the following:

1. 2/90 Sign Systems, Inc.

2. APCO Graphics, Inc.
3. ASI Sign Systems, Inc.
4. Innerface Architectural Signage, Inc.
5. Basis-of-Design: InPro Corporation (IPC); Apsen Collection.
6. Mohawk Sign Systems.

B. Panel Sign: Sign with smooth, uniform surfaces; with message and characters having uniform faces, sharp corners, and precisely formed lines and profiles; and as follows:

1. Solid-Sheet Sign: Acrylic sheet with finish specified in "Surface Finish and Applied Graphics" Subparagraph below and as follows:

   a. Thickness: Manufacturer's standard for size of sign, but not less than 0.125 inch (3.18 mm).
   b. Etched and Filled Graphics: Sign face etched or routed to receive enamel-paint infill.

2. Laminated Polycarbonate-Sheet Sign: Polycarbonate face sheet laminated to each side of phenolic base sheet to produce composite sheet.

   a. Composite-Sheet Thickness: Manufacturer's standard for size of sign, but not less than 0.125 inch (3.18 mm).

3. Sign-Panel Perimeter: Finish edges smooth.

   a. Edge Condition: Beveled.
   b. Corner Condition in Elevation: Rounded to radius indicated.

4. Mounting: Surface mounted to wall with two-face tape.
5. Surface Finish and Applied Graphics:

   a. Integral Acrylic Sheet Color: As selected by Architect from full range of industry colors.
   b. Painted Finish and Graphics: Manufacturer's standard, factory-applied acrylic polyurethane, in color as selected by Architect from manufacturer's full range.
   c. Overcoat: Manufacturer's standard baked-on clear coating.

6. Text and Typeface: Accessible raised characters and Braille typeface as selected by Architect from manufacturer's full range and variable content as scheduled. Finish raised characters to contrast with background color, and finish Braille to match background color.
7. Flatness Tolerance: Sign panel shall remain flat or uniformly curved under installed conditions as indicated and within a tolerance of plus or minus 1/16 inch (1.5 mm) measured diagonally from corner to corner.

C. Room-Identification Sign: Sign with smooth, uniform surfaces; with message and characters having uniform faces, sharp corners, and precisely formed lines and profiles; and as follows:

1. Laminated-Sheet Sign: Sandblasted polymer face sheet with raised graphics laminated to acrylic backing sheet to produce composite sheet.

   a. Composite-Sheet Thickness: Manufacturer's standard for size of sign, but not less than 0.125 inch (3.18 mm).
   b. Subsurface Graphics: Snap-in changeable insert beneath removable face sheet or slide-in changeable insert.
   c. Color(s): As selected by Architect from manufacturer's full range.

2. Sign-Panel Perimeter: Finish edges smooth.

a. Edge Condition: Border with eased edge.
b. Corner Condition in Elevation: Rounded to radius indicated.

3. Mounting: with two-face tape.
4. Text and Typeface: Accessible raised characters and Braille typeface as selected by Architect from manufacturer's full range and variable content as scheduled. Finish raised characters to contrast with background color, and finish Braille to match background color.

2.3 PANEL-SIGN MATERIALS

A. Acrylic Sheet: ASTM D 4802, category as standard with manufacturer for each sign, Type UVF (UV filtering).

B. Polycarbonate Sheet: ASTM C 1349, Appendix X1, Type II (coated, mar-resistant, UV-stabilized polycarbonate), with coating on both sides.

C. Plastic-Laminate Sheet: NEMA LD 3, general-purpose HGS grade, 0.048-inch (1.2-mm) nominal thickness.

D. Paints and Coatings for Sheet Materials: Inks, dyes, and paints that are recommended by manufacturer for optimum adherence to surface and are UV and water resistant for colors and exposure indicated.

2.4 ACCESSORIES

A. Fasteners and Anchors: Manufacturer's standard as required for secure anchorage of signage, noncorrosive and compatible with each material joined, and complying with the following:

1. For exterior exposure, furnish stainless-steel devices unless otherwise indicated.

B. Two-Face Tape: Manufacturer's standard high-bond, foam-core tape, 0.045 inch (1.14 mm) thick, with adhesive on both sides.

C. Bituminous Paint: Cold-applied asphalt emulsion complying with ASTM D 1187.

2.5 FABRICATION

A. General: Provide manufacturer's standard sign assemblies according to requirements indicated.

1. Preassemble signs in the shop to greatest extent possible. Disassemble signs and assemblies only as necessary for shipping and handling limitations. Clearly mark units for reassembly and installation; apply markings in locations concealed from view after final assembly.
2. Mill joints to a tight, hairline fit. Form assemblies and joints exposed to weather to resist water penetration and retention.
3. Comply with AWS for recommended practices in welding and brazing. Provide welds and brazes behind finished surfaces without distorting or discoloring exposed side. Clean exposed welded and brazed connections of flux, and dress exposed and contact surfaces.
4. Conceal connections if possible; otherwise, locate connections where they are inconspicuous.
5. Internally brace signs for stability, to meet structural performance loading without oil-canning or other surface deformation, and for securing fasteners.
6. Provide rabbets, lugs, and tabs necessary to assemble components and to attach to existing work. Drill and tap for required fasteners. Use concealed fasteners where possible; use exposed fasteners that match sign finish.

B. Surface-Engraved Graphics: Machine engrave characters and other graphic devices into indicated sign surface to produce precisely formed copy, incised to uniform depth.

1. Engraved Metal: Fill engraved graphics with manufacturer's standard baked enamel.
2. Engraved Opaque Acrylic Sheet: Fill engraved graphics with manufacturer's standard enamel.
3. Face-Engraved Clear Acrylic Sheet: Fill engraved copy with manufacturer's standard enamel. Apply manufacturer's standard opaque background color coating to back face of acrylic sheet.
4. Engraved Plastic Laminate: Engrave through exposed face ply of plastic-laminate sheet to expose contrasting core ply.

C. Signs with Changeable Message Capability: Fabricate signs to allow insertion of changeable messages as follows:

1. For snap-in changeable inserts beneath removable face sheet, furnish one suction or other device to assist in removing face sheet. Furnish initial changeable insert. Subsequent changeable inserts are by Owner.
2. For slide-in changeable inserts, fabricate slot without burrs or constrictions that inhibit function. Furnish initial changeable insert. Subsequent changeable inserts are by Owner.

2.6 GENERAL FINISH REQUIREMENTS

A. Protect mechanical finishes on exposed surfaces from damage by applying a strippable, temporary protective covering before shipping.

B. Appearance of Finished Work: Noticeable variations in same piece are not acceptable. Variations in appearance of adjoining components are acceptable if they are within the range of approved Samples and are assembled or installed to minimize contrast.

C. Directional Finishes: Run grain with long dimension of each piece and perpendicular to long dimension of finished trim or border surface unless otherwise indicated.

D. Organic, Anodic, and Chemically Produced Finishes: Apply to formed metal after fabrication but before applying contrasting polished finishes on raised features unless otherwise indicated.

PART 3 - EXECUTION

3.1 EXAMINATION

A. Examine substrates, areas, and conditions, with Installer present, for compliance with requirements for installation tolerances and other conditions affecting performance of the Work.

B. Verify that sign-support surfaces are within tolerances to accommodate signs without gaps or irregularities between backs of signs and support surfaces unless otherwise indicated.

C. Verify that anchorage devices embedded in permanent construction are correctly sized and located to accommodate signs.

D. Proceed with installation only after unsatisfactory conditions have been corrected.

3.2 INSTALLATION

A. General: Install signs using mounting methods indicated and according to manufacturer's written instructions.

1. Install signs level, plumb, true to line, and at locations and heights indicated, with sign surfaces free of distortion and other defects in appearance.
2. Install signs so they do not protrude or obstruct according to the accessibility standard.
3. Before installation, verify that sign surfaces are clean and free of materials or debris that would impair installation.
4. Corrosion Protection: Coat concealed surfaces of exterior aluminum in contact with grout, concrete, masonry, wood, or dissimilar metals, with a heavy coat of bituminous paint.

B. Accessible Signage: Install in locations on walls as indicated on Drawings and according to the accessibility standard.

C. Mounting Methods:

1. Two-Face Tape: Clean bond-breaking materials from substrate surface and remove loose debris. Apply tape strips symmetrically to back of sign and of suitable quantity to support weight of sign without slippage. Keep strips away from edges to prevent visibility at sign edges. Place sign in position, and push to engage tape adhesive.

D. Signs Mounted on Glass: Provide opaque sheet matching sign material and finish onto opposite side of glass to conceal back of sign.

3.3 ADJUSTING AND CLEANING

A. Remove and replace damaged or deformed signs and signs that do not comply with specified requirements. Replace signs with damaged or deteriorated finishes or components that cannot be successfully repaired by finish touchup or similar minor repair procedures.

B. Remove temporary protective coverings and strippable films as signs are installed.

C. On completion of installation, clean exposed surfaces of signs according to manufacturer's written instructions, and touch up minor nicks and abrasions in finish. Maintain signs in a clean condition during construction and protect from damage until acceptance by Owner.

3.4 SIGN SCHEDULE

A. Room-Identification Signs

1. Size: As indicated on Drawings.
2. Quantity: Provide one sign for each door into a room.
3. Locations: All doors into spaces except for the following:

a. Toilet rooms and bathrooms (refer to toilet room signs below).
b. Corridors and Vestibules (sign shall be provided at main office hallway).
c. Exterior doors (refer to exit signs below).

4. Changeable Message Capability: Provide changeable message capability at all rooms except the following:

a. Mechanical, Electrical, Fire Pump, MDF, and IDF rooms.
b. Janitor closets.
c. Kitchen rooms, except Office.
d. Storage rooms.

B. Toilet Room Signs

1. Size: As indicated on Drawings.
2. Locations: All toilet rooms and bathrooms.

C. Exit Signs

1. Size: 6 inches wide by 4 inches high.
2. Message: “EXIT” in raised characters and type 2 braille.
3. Locations: All exterior exit doors having lighted exit signs and doors into stairs.

END OF SECTION 101423

SECTION 101463 – ELECTRONIC MESSAGE SIGNAGE

PART 1 - GENERAL

1.1 RELATED DOCUMENTS

A. Drawings and general provisions of the Contract, including General and Supplementary Conditions and Division 01 Specification Sections, apply to this Section.

1.2 SUMMARY

A. Section Includes:

1. Double-sided LED electronic message and backlit identification panel sign.

B. Related Requirements:

1. Division 03 and 04 for masonry base and foundation for electronic message sign.
2. Division 26 for electric service and connections.

1.3 COORDINATION

A. Furnish templates and tolerance information for placement of sign-anchorage devices embedded in permanent construction by other installers.

B. Furnish templates for placement of electrical service embedded in permanent construction by other installers.

1.4 SUBMITTALS

A. Product Data: For each model indicated. Include details of construction relative to materials, dimensions of individual components, profiles, and finishes.
1. Provide

B. Shop Drawings: For each type of sign required.

1. Include fabrication and installation details and attachments to other work.
2. Show sign mounting heights, locations of supplementary supports to be provided by other installers, and accessories.
3. Show message list, typestyles, graphic elements, and layout for each sign at least 1-1/2 inch scale.
4. Show locations of electrical service connections.
5. Include diagrams for power, signal, and control wiring.

C. Samples for Initial Selection: For each type of sign assembly, exposed component, and exposed finish.

D. Samples for Verification: For each type of sign assembly, showing all components and with the required finish(es), in manufacturer's standard size unless otherwise indicated.

1.5 INFORMATIONAL SUBMITTALS

A. Manufacturer's Certificate: Certificate from manufacturer that product meets FCC requirements.

B. Evaluation Reports: For post-installed anchors, from ICC-ES or other qualified testing agency acceptable to authorities having jurisdiction.

C. Sample Warranty: For special warranty.

1.6 CLOSEOUT SUBMITTALS

A. Maintenance Data: For signs to include in maintenance manuals.

1.7 QUALITY ASSURANCE

A. Installer Qualifications: Engage an experienced installer who is an authorized representative of sign manufacturer for installation and maintenance of signs to be provided.

B. Source Limitations: Obtain sign components through one source from a single manufacturer.

C. Product Options: Size, profiles, and dimensional requirements of signs are based on the model indicated. Other manufacturers' signs with equal performance characteristics may be considered. Refer to Division 1 Section "Substitutions."

D. Do not modify intended aesthetic effects, as judged solely by Architect, except with Architect's approval and only to the extent needed to comply with performance requirements. Where modifications are proposed, submit comprehensive explanatory data to Architect for review.

E. Listing and Labeling: Provide electrically operated fixtures specified in this Section that are listed and labeled.

1. The Terms "Listed" and "Labeled": As defined in the National Electrical code, Article 100.

F. FCC Standards: Provide product tested and labeled to meet requirements of FCC emissions guidelines.

1.8 FIELD CONDITIONS

A. Field Measurements: Verify locations of anchorage devices and electrical service embedded in permanent construction by other installers by field measurements before fabrication, and indicate measurements on Shop Drawings.

B. Established Dimensions: Where field measurements cannot be made without delaying the Work, establish rough-in dimensions and proceed with fabricating signs without field measurements. Coordinate construction to ensure actual rough-in dimensions correspond to established dimensions.

1.9 WARRANTY

A. Special Warranty: Manufacturer agrees to repair or replace components of signs that fail in materials or workmanship within specified warranty period.

1. Failures include, but are not limited to, the following:

a. Deterioration of finishes beyond normal weathering.
b. Deterioration of embedded graphic image.
c. Separation or delamination of sheet materials and components.

2. Warranty Period: Five years from date of Substantial Completion.

PART 2 - PRODUCTS

2.1 PERFORMANCE REQUIREMENTS

A. Structural Performance: Signs and supporting elements shall withstand the effects of gravity and other loads within limits and under conditions indicated.

1. Uniform Wind Load: As indicated on Drawing S201.
2. Concentrated Horizontal Load: As indicated on Drawing S201.
3. Other Design Load: As indicated on Drawing S201.
4. Uniform and concentrated loads need not be assumed to act concurrently.

B. Thermal Movements: For exterior signs, allow for thermal movements from ambient and surface temperature changes.

1. Temperature Change: 120 deg F (67 deg C), ambient; 180 deg F (100 deg C), material surfaces.

C. Electrical Components, Devices, and Accessories: Listed and labeled as defined in NFPA 70, by a qualified testing agency, and marked for intended location and application.

2.2 DOUBLE-FACED LED SIGNS

A. Basis-of-Design Product: Subject to compliance with requirements, provide Watchfire Signs, 16mm pixel pitch, or a comparable product by one of the following:

1. Daktronics.
2. Stewart Signs

B. Size and Layout: As designated on Drawings.

C. UL Listing: Sign assembly shall be listed per UL 48.

D. Displays: Double-sided full-color LED displays for display of text, video, animation, and still images. Both sides shall display same content.

1. Pixel pitch: 16 mm.

a. Virtual pixels, line sharing, or other non-hardware based arrangements are not acceptable.

2. LED Lifetime Rating (degredation to 50% original brightness under 100% nit output): 100,000 hours.
3. Brightness: 10,000 nits.
4. Color Capability: 10 million colors minimum.
5. Color Calibration: Color calibrate sign across entire face of sign and across all modules.

a. Bin sorting does not qualify as color calibration.

6. View Angle:

    a. Horizontal: 140 degrees.
    b. Vertical: 70 degrees.

7. Video Frame Rate: 30 frames per second.

E. Cabinets: Extruded aluminum cabinet with precision mitered corners, solid welds, and satin black finish. Assemble single face displays within a single cabinet. Protect internal electronic components. Control internal temperature with cooling fans designed for use without filters or other scheduled maintenance.

F. Communications Method: Remote cellular connection, including pre-paid data service for lifetime of sign with bandwidth and data capacity sufficient for reasonable programing of sign by user.

G. Power Supplies: Individually replaceable without need to replace other components or modules.

H. Surge Protection: Provide surge protection for power input and data input.

I. Date, Time, and Temperature: Built-in temperature sensor and clock with battery. Date, time, and temperature can be displayed at any point and embedded with your own text or graphics.

J. Software: Provide manufacturer's display control software or equivalent cloud-based control system.

1. Adjustable Brightness & Scheduled Dimming: Program sign to adjust brightness based on site specific sunrise and sunset times. Programming interface shall allow manual override of dimming, and on/off times. Dimming shall occur progressively, without abrupt changes in brightness or flicker.
2. Programming/scheduling display of messages at set times, up to a year in advance.
3. Graphics Library: Unlimited lifetime access to manufacturer's animated and static graphics library.
4. Security: Provide password-protected software interface with encrypted communication to sign.
5. Diagnostics: Include remote diagnostics and remote internal and external temperature monitoring.
6. Remote Access: Provide remote access to sign programming software.

2.3 FIXED SIGNS

A. Fixed Sign: Sign of hollow-box configuration; with smooth, uniform surfaces and support assembly; with message and characters having uniform faces, sharp corners, and precisely formed lines and profiles; and as follows:

1. Illuminated Sign: Backlighted construction with LED lighting including power supplies, wiring, and other components necessary by LED manufacturer and UL-48. LED illumination shall be even across the entire face of sign and be equivalent in brightness to high-output fluorescent lamps at 1 foot spacing on each face of the sign. Provide access for service and replacing LEDs using removable faces or access doors. Cabinet construction shall be aluminum with steel only used where required for internal supports. Weld and seal all joints. Finished assembly shall be UL listed Wet.

    a. Power: As indicated on electrical Drawings.
    b. Weeps: Provide weep holes to drain water at lowest part of exterior signs. Equip weeps with permanent baffles to block light leakage without inhibiting drainage.

2. Solid-Sheet Sign Panels and Returns: Aluminum sheet with finish specified in "Sign-Panel-Face Finish and Applied Graphics" Subparagraph and as follows:

a. Thickness: Manufacturer's standard for size of sign, but not less than 0.125 inches.
b. Inset, Cutout Characters: Sign face routed to receive push-through acrylic graphics projecting from the sign panel.

3. Hollow-Box Sign Frame: Entire perimeter framed with formed-aluminum sheet or extruded aluminum, hollow-box-type frame with vertical edges attached to supports with aluminum fittings. Close top and bottom edges of panels with manufacturer's standard welded seams or extrusions.

a. Hollow-Box Depth: As indicated on Drawings.
b. Profile: Square.
c. Corner Condition in Elevation: Mitered.
d. Finish and Color: Match sign-panel face.

4. Posts: Aluminum.

a. Shape: Square or rectangular.
b. Wall thickness: As required for structural performance, but not less than 1/4 inch.
c. Installation Method: Baseplate.
d. Finish and Color: Match sign-panel face.

5. Sign-Panel-Face Finish and Applied Graphics:

a. Integral Acrylic Sheet Color: As selected by Architect from full range of industry colors.
b. Baked-Enamel or Powder-Coat Finish and Graphics: Manufacturer's standard, in metallic silver color to match Architect’s sample.
c. Overcoat: Manufacturer's standard baked-on clear coating.

6. Text and Typeface: Helvetica.

2.4 MATERIALS

A. Aluminum Sheet and Plate: ASTM B 209 (ASTM B 209M), alloy and temper recommended by aluminum producer and finisher for type of use and finish indicated.

B. Aluminum Extrusions: ASTM B 221 (ASTM B 221M), alloy and temper recommended by aluminum producer and finisher for type of use and finish indicated.

C. Acrylic Sheet: ASTM D 4802, category SG as standard with manufacturer for each sign, Type UVF (UV filtering). Extruded acrylic is not acceptable.

D. Paints and Coatings for Sheet Materials: Inks, dyes, and paints that are recommended by manufacturer for optimum adherence to surface and are UV and water resistant for colors and exposure indicated.

2.5 ACCESSORIES

A. Fasteners and Anchors: Manufacturer's standard as required for secure anchorage of signs, noncorrosive and compatible with each material joined, and complying with the following unless otherwise indicated:

1. Use concealed fasteners and anchors unless indicated to be exposed.
2. For exterior exposure, furnish stainless-steel devices unless otherwise indicated.
3. Exposed Metal-Fastener Components, General:

a. Fabricated from same basic metal and finish of fastened metal unless otherwise indicated.

b. Fastener Heads: For nonstructural connections, use flathead or oval countersunk screws and bolts with tamper-resistant, spanner-head or one-way-head slots unless otherwise indicated.

4. Inserts: Furnish inserts to be set by other installers into concrete or masonry work.

B. Post-Installed Anchors: Fastener systems with bolts of same basic metal as fastened metal, if visible, unless otherwise indicated; with working capacity greater than or equal to the design load, according to an evaluation report acceptable to authorities having jurisdiction, based on ICC-ES AC58 as appropriate for the substrate.

1. Uses: Securing signs with imposed loads to structure.
2. Type: Torque-controlled, adhesive anchor or adhesive anchor.
3. Material for Exterior or Interior Locations and Where Stainless Steel Is Indicated: Alloy Group 1 (A1) stainless-steel bolts, ASTM F 593 (ASTM F 738M), and nuts, ASTM F 594 (ASTM F 836M).

C. Bituminous Paint: Cold-applied asphalt emulsion complying with ASTM D 1187/D 1187M.

D. Anchoring Materials:

1. Nonshrink, Nonmetallic Grout: Factory-packaged, nonstaining, noncorrosive, nongaseous grout complying with ASTM C 1107/C 1107M. Provide grout specifically recommended by manufacturer for interior and exterior applications.
2. Anchoring Cement: Factory-packaged, nonshrink, nonstaining, hydraulic-controlled expansion cement formulation for mixing with water at Project site to create pourable anchoring, patching, and grouting compound.

a. Water-Resistant Product: At exterior locations, provide formulation that is resistant to erosion from water exposure without needing protection by a sealer or waterproof coating and that is recommended by manufacturer for exterior use.

2.6 FABRICATION

A. General: Provide manufacturer's standard sign assemblies according to requirements indicated.

1. Preassemble signs in the shop to greatest extent possible. Disassemble signs only as necessary for shipping and handling limitations. Clearly mark units for reassembly and installation, in locations concealed from view after final assembly.
2. Mill joints to tight, hairline fit. Form assemblies and joints exposed to weather to resist water penetration and retention.
3. Comply with AWS for recommended practices in welding and brazing. Provide welds and brazes behind finished surfaces without distorting or discoloring exposed side. Clean exposed welded and brazed joints of flux, and dress exposed and contact surfaces.
4. Conceal fasteners and anchors unless indicated to be exposed; locate exposed fasteners where they will be inconspicuous.
5. Internally brace signs for stability, to meet structural performance loading without oil-canning or other surface deformation, and for securing fasteners.

B. Sign Panels: Construct sign-panel surfaces to be smooth and to remain flat under installed conditions within a tolerance of plus or minus 1/16 inch (1.5 mm) measured diagonally from corner to corner.

1. Coordinate dimensions and attachment methods to produce panels with closely fitting joints. Align edges and surfaces with one another in the relationship indicated.

2. Increase panel thickness or reinforce with concealed stiffeners or backing materials as needed to produce surfaces without distortion, buckles, warp, or other surface deformations.
3. Continuously weld joints and seams unless other methods are indicated; grind, fill, and dress welds to produce smooth, flush, exposed surfaces with welds invisible after final finishing.

C. Post Fabrication: Fabricate posts designed for structural performance indicated and of lengths required for installation method indicated for each sign.

1. Aluminum Posts: Manufacturer's standard 0.125-inch- (3.18-mm-) thick, extruded-aluminum tubing unless otherwise indicated, with brackets or slots to engage sign panels. Include post caps, fillers, spacers, junction boxes, access panels, reinforcement where required for loading conditions, and related accessories required for complete installation.
2. Baseplates: Fabricate posts with baseplates welded to bottom of posts. Drill holes in baseplate for anchor-bolt connection.

   a. Provide preset or drilled-in-place anchor bolts of size required for connecting posts to foundations.

2.7 GENERAL FINISH REQUIREMENTS

A. Protect mechanical finishes on exposed surfaces from damage by applying a strippable, temporary protective covering before shipping.

B. Appearance of Finished Work: Noticeable variations in same piece are not acceptable. Variations in appearance of adjoining components are acceptable if they are within the range of approved Samples and are assembled or installed to minimize contrast.

C. Organic, Anodic, and Chemically Produced Finishes: Apply to formed metal after fabrication but before applying contrasting polished finishes on raised features unless otherwise indicated.

2.8 ALUMINUM FINISHES

A. Baked-Enamel or Powder-Coat Finish: AAMA 2603 except with a minimum dry film thickness of 1.5 mils (0.04 mm). Comply with coating manufacturer's written instructions for cleaning, conversion coating, and applying and baking finish.

PART 3 - EXECUTION

3.1 EXAMINATION

A. Examine substrates, areas, and conditions, with Installer present, for compliance with requirements for installation tolerances and other conditions affecting performance of the Work.

B. Verify that sign-support surfaces are within tolerances to accommodate signs.

C. Verify that anchorage devices embedded in permanent construction are correctly sized and located to accommodate signs.

D. Verify that electrical service is correctly sized and located to accommodate signs.

E. Proceed with installation only after unsatisfactory conditions have been corrected.

3.2 INSTALLATION

A. A. General: Install signs using installation methods indicated and according to manufacturer's written instructions.

1. Install signs level, plumb, and at locations and heights indicated, with sign surfaces free of distortion and other defects in appearance.
2. Install signs so they do not protrude or obstruct according to the accessibility standard.
3. Before installation, verify that sign components are clean and free of materials or debris that would impair installation.
4. Corrosion Protection: Coat concealed surfaces of exterior aluminum in contact with grout, concrete, masonry, wood, or dissimilar metals, with a heavy coat of bituminous paint.

3.3 INSTALLING POSTS

A. Vertical Tolerance: Set posts plumb within a tolerance of 1/16 inch in 3 feet (2 mm in 1 m).

B. Baseplate Method:

1. Preset Anchor Bolts: Set post baseplate in position over anchor bolts projecting from concrete foundation, shim and support post to prevent movement, place washers and nuts, and tighten. Fill shim space with nonshrink, nonmetallic grout, mixed and placed to comply with manufacturer's written instructions.
2. Drilled-in-Place Anchor Bolts: Set post baseplate in position over concrete foundation, locate and drill anchor holes, shim and support post to prevent movement, place washers and anchor bolts, and tighten. Fill shim space with nonshrink, nonmetallic grout, mixed and placed to comply with manufacturer's written instructions.

3.4 ADJUSTING AND CLEANING

A. Remove and replace damaged or deformed signs and signs that do not comply with specified requirements. Replace signs with damaged or deteriorated finishes or components that cannot be successfully repaired by finish touchup or similar minor repair procedures.

B. Remove temporary protective coverings and strippable films as signs are installed.

C. On completion of installation, clean exposed surfaces of signs according to manufacturer's written instructions, and touch up minor nicks and abrasions in finish. Maintain signs in a clean condition during construction and protect from damage until acceptance by Owner.

3.5 DEMONSTRATION AND TRAINING

A. Provide initial programming of sign to Owner’s specification.

B. Engage manufacturer-authorized trainer to provide on-site training of Owner in use, operation, and programming of sign.

END OF SECTION 101463

SECTION 102113.19 - PLASTIC TOILET COMPARTMENTS

PART 1 - GENERAL

1.1 RELATED DOCUMENTS

A. Drawings and general provisions of the Contract, including General and Supplementary Conditions and Division 01 Specification Sections, apply to this Section.

1.2 SUMMARY

A. Section Includes:

1. Solid-plastic toilet compartments configured as toilet enclosures.

B. Related Requirements:
1. Section 061053 "Miscellaneous Rough Carpentry" for blocking.
2. Section 102800 "Toilet, Bath, and Laundry Accessories" for toilet tissue dispensers, grab bars, purse shelves, and similar accessories mounted on toilet compartments.

1.3 ACTION SUBMITTALS

A. Product Data: For each type of product.

1. Include construction details, material descriptions, dimensions of individual components and profiles, and finishes for toilet compartments.

B. Shop Drawings: For toilet compartments.

1. Include plans, elevations, sections, details, and attachment details.
2. Show locations of cutouts for compartment-mounted toilet accessories.
3. Show locations of centerlines of toilet fixtures.
4. Show locations of floor drains.

C. Samples for Initial Selection: For each type of toilet compartment material indicated.

1. Include Samples of hardware and accessories involving material and color selection.

D. Samples for Verification: For the following products, in manufacturer's standard sizes unless otherwise indicated:

1. Each type of material, color, and finish required for toilet compartments, prepared on 6-inch-(152-mm-) square Samples of same thickness and material indicated for Work.
2. Each type of hardware and accessory.

E. Product Schedule: For toilet compartments, prepared by or under the supervision of supplier, detailing location and selected colors for toilet compartment material.

1.4 INFORMATIONAL SUBMITTALS

A. Product Certificates: For each type of toilet compartment show certifying that products supplied meet NFPA 286 requirements.

1.5 CLOSEOUT SUBMITTALS

A. Maintenance Data: For toilet compartments to include in maintenance manuals.

1.6 MAINTENANCE MATERIAL SUBMITTALS

A. Furnish extra materials that match products installed and that are packaged with protective covering for storage and identified with labels describing contents and source.

1. Door Hinges: One hinge(s) with associated fasteners.
2. Latch and Keeper: One latch(es) and keeper(s) with associated fasteners.
3. Door Bumper: One bumper(s) with associated fasteners.
4. Door Pull: One door pull(s) with associated fasteners.
5. Fasteners: Ten fasteners of each size and type.

1.7 PROJECT CONDITIONS

A. Field Measurements: Verify actual locations of toilet fixtures, walls, columns, ceilings, and other construction contiguous with toilet compartments by field measurements before fabrication.

PART 2 - PRODUCTS

2.1 PERFORMANCE REQUIREMENTS

A. Surface-Burning Characteristics: Comply with ASTM E 84; testing by a qualified testing agency. Identify products with appropriate markings of applicable testing agency.

1. Flame-Spread Index: 75 or less.
2. Smoke-Developed Index: 450 or less.

B. Room Corner Test: Provide products compliant with IBC 2012 acceptance criteria when tested in accordance with NFPA 286.

C. Regulatory Requirements: Comply with applicable provisions in the U.S. Architectural & Transportation Barriers Compliance Board's ADA-ABA Accessibility Guidelines for Buildings and Facilities and ICC A117.1 for toilet compartments designated as accessible.

2.2 SOLID-PLASTIC TOILET COMPARTMENTS

A. Manufacturers: Subject to compliance with requirements, provide products by one of the following:

1. Bradley Corporation.
2. General Partitions Mfg. Corp.
3. Global Partitions; ASI Group.

4. Scranton Products.
5. Yenn & Hart Green Materials.

B. Toilet-Enclosure Style: Overhead braced.

C. Door, Panel, and Pilaster Construction: Solid, high-density polyethylene (HDPE) panel material, not less than 1 inch (25 mm) thick, seamless, with eased edges, and with homogenous color and pattern throughout thickness of material.

1. Integral Hinges: Configure doors and pilasters to receive integral hinges.
2. Heat-Sink Strip: Manufacturer's standard continuous, extruded-aluminum or stainless-steel strip fastened to exposed bottom edges of solid-plastic components to hinder malicious combustion.
3. Color and Pattern: One color and pattern in each room as selected by Architect from manufacturer's full range.

D. Pilaster Shoes: Manufacturer's standard design; stainless steel.

E. Brackets (Fittings):

1. Full-Height (Continuous) Type: Manufacturer's standard design; extruded aluminum or stainless steel.

2.3 HARDWARE AND ACCESSORIES

A. Hardware and Accessories: Manufacturer's standard operating hardware and accessories.

1. Material: Clear-anodized aluminum or stainless steel.

a. Zamac in not an acceptable material. Provide heavy-duty hardware as required.

2. Hinges: Manufacturer's standard paired, self-closing type that can be adjusted to hold doors open at any angle up to 90 degrees, allowing emergency access by lifting door.
3. Latch and Keeper: Manufacturer's standard surface-mounted latch unit designed for emergency access and with combination rubber-faced door strike and keeper. Provide units that comply with regulatory requirements for accessibility at compartments designated as accessible.
4. Coat Hook: Manufacturer's standard combination hook and rubber-tipped bumper, sized to prevent in-swinging door from hitting compartment-mounted accessories.
5. Door Bumper: Manufacturer's standard rubber-tipped bumper at out-swinging doors.
6. Door Pull: Manufacturer's standard unit at out-swinging doors that complies with regulatory requirements for accessibility. Provide units on both sides of doors at compartments designated as accessible.

B. Overhead Bracing: Manufacturer's standard continuous, extruded-aluminum head rail with antigrip profile and in manufacturer's standard finish.

C. Anchorages and Fasteners: Manufacturer's standard exposed fasteners of stainless steel, finished to match the items they are securing, with theft-resistant-type heads. Provide sex-type bolts for through-bolt applications. For concealed anchors, use stainless-steel, hot-dip galvanized-steel, or other rust-resistant, protective-coated steel compatible with related materials.

2.4 MATERIALS

A. Aluminum Castings: ASTM B 26/B 26M.

B. Aluminum Extrusions: ASTM B 221 (ASTM B 221M).

C. Stainless-Steel Sheet: ASTM A 666, Type 304, stretcher-leveled standard of flatness.

D. Stainless-Steel Castings: ASTM A 743/A 743M.

2.5 FABRICATION

A. Fabrication, General: Fabricate toilet compartment components to sizes indicated. Coordinate requirements and provide cutouts for through-partition toilet accessories where required for attachment of toilet accessories.

B. Overhead-Braced Units: Provide manufacturer's standard corrosion-resistant supports, leveling mechanism, and anchors at pilasters to suit floor conditions. Provide shoes at pilasters to conceal supports and leveling mechanism.

C. Door Size and Swings: Unless otherwise indicated, provide 24-inch- (610-mm-) wide, in-swinging doors for standard toilet compartments and 36-inch- (914-mm-) wide, out-swinging doors with a minimum 32-inch- (813-mm-) wide, clear opening for compartments designated as accessible.

PART 3 - EXECUTION

3.1 EXAMINATION

A. Examine areas and conditions, with Installer present, for compliance with requirements for fastening, support, alignment, operating clearances, and other conditions affecting performance of the Work.

1. Confirm location and adequacy of blocking and supports required for installation.

B. Proceed with installation only after unsatisfactory conditions have been corrected.

3.2 INSTALLATION

A. General: Comply with manufacturer's written installation instructions. Install units rigid, straight, level, and plumb. Secure units in position with manufacturer's recommended anchoring devices.

1. Maximum Clearances:

a. Pilasters and Panels: 1/2 inch (13 mm).
b. Panels and Walls: 1 inch (25 mm).

2. Full-Height (Continuous) Brackets: Secure panels to walls and to pilasters with full-height brackets.

a. Locate bracket fasteners so holes for wall anchors occur in masonry or tile joints.
b. Align brackets at pilasters with brackets at walls.

B. Overhead-Braced Units: Secure pilasters to floor and level, plumb, and tighten. Set pilasters with anchors penetrating not less than 1-3/4 inches (44 mm) into structural floor unless otherwise indicated in manufacturer's written instructions. Secure continuous head rail to each pilaster with no fewer than two

fasteners. Hang doors to align tops of doors with tops of panels, and adjust so tops of doors are parallel with overhead brace when doors are in closed position.

3.3 ADJUSTING

A. Hardware Adjustment: Adjust and lubricate hardware according to hardware manufacturer's written instructions for proper operation. Set hinges on in-swinging doors to hold doors open approximately 30 degrees from closed position when unlatched. Set hinges on out-swinging doors to return doors to fully closed position.

END OF SECTION 102113.19

SECTION 102123 - CUBICLE CURTAINS AND TRACK

PART 1 - GENERAL

1.1 RELATED DOCUMENTS

A. Drawings and general provisions of the Contract, including General and Supplementary Conditions and Division 01 Specification Sections, apply to this Section.

1.2 SUMMARY

A. Section Includes:

1. Curtain tracks and carriers.
2. Cubicle curtains.

B. Related Requirements:

1. Section 061053 "Miscellaneous Rough Carpentry" for supplementary wood framing and blocking for mounting items requiring anchorage.
2. Section 092216 "Non-Structural Metal Framing" for supplementary metal framing and blocking for mounting items requiring anchorage.

1.3 ACTION SUBMITTALS

A. Product Data: For each type of product.

1. Include durability, laundry temperature limits, fade resistance, applied curtain treatment, and fire-test-response characteristics for each type of curtain fabric indicated.
2. Include data for each type of track.

B. Shop Drawings:

1. Show layout and types of cubicles, sizes of curtains, number of carriers, anchorage details, and conditions requiring accessories. Indicate dimensions taken from field measurements.
2. Include details on blocking above ceiling.

C. Samples for Initial Selection: For each type of curtain material indicated.

D. Samples for Verification: For each type of product required, prepared on Samples of size indicated below:

1. Curtain Fabric: 10-inch- (254-mm-) square swatch or larger as required to show complete pattern repeat, from dye lot used for the Work, with specified treatments applied. Mark top and face of material.
2. Mesh Top: Not less than 10 inches (254 mm) square.
3. Curtain Track: Not less than 10 inches (254 mm) long.
4. Curtain Carrier: Full-size unit.

1.4 CLOSEOUT SUBMITTALS

A. Operation and Maintenance Data: For curtains, track, and hardware to include in operation and maintenance manuals.

PART 2 - PRODUCTS

2.1 PERFORMANCE REQUIREMENTS

A. Curtains: Provide curtain fabrics with the following characteristics:

1. Launderable to a temperature of not less than 160 deg F (71 deg C).
2. Flame resistant and identical to those that have passed NFPA 701 when tested by a testing and inspecting agency acceptable to authorities having jurisdiction.

a. Identify fabrics with appropriate markings of a qualified testing agency.

2.2 CURTAIN SUPPORT SYSTEMS

A. Manufacturers: Subject to compliance with requirements, provide products by one of the following:

1. A. R. Nelson Co.
2. Construction Specialties, Inc.
3. Imperial Fastener Company, Inc.
4. InPro Corporation (IPC).

B. Extruded-Aluminum Curtain Track: Not less than 1-1/4 inches wide by 3/4 inch high (32 mm wide by 19 mm high); with 0.058-inch (1.47-mm) minimum wall thickness.

1. Curved Track: Factory-fabricated, 12-inch- (305-mm-) radius bends.
2. Finish: Clear anodized.

C. Curtain Track Accessories: Fabricate splices, end caps, connectors, end stops, coupling and joining sleeves, wall flanges, brackets, ceiling clips, and other accessories from same material and with same finish as track.

1. End Stop: Nonremovable.
2. Switch Unit: Shuttle and coupling device for rerouting and securing cubicle curtain, with pull chain for switching track.

D. Curtain Carriers: One-piece nylon glide with chrome-plated steel hook.

E. Exposed Fasteners: Stainless steel.

F. Concealed Fasteners: Hot-dip galvanized.

2.3 CURTAINS

A. Basis-of-Design Product: Subject to compliance with requirements, provide InPro Corporation (IPC); Sustainable Fabric Cubicle Curtains or a comparable product by one of the following:

1. A. R. Nelson Co.
2. Construction Specialties, Inc.
3. Imperial Fastener Company, Inc.

B. Cubicle Curtain Fabric: Curtain manufacturer's standard, 100 percent polyester; inherently and permanently flame resistant, stain resistant, and antimicrobial.

1. Pattern: Equivalent to range in basis-of-design.
2. Color: As selected by Architect from manufacturer's full range.

C. Curtain Grommets: Two-piece, rolled-edge, rustproof, nickel-plated brass; spaced not more than 6 inches (152 mm) o.c.; machined into top hem.

D. Mesh Top: Not less than 20-inch- (508-mm-) high mesh top of No. 50 nylon mesh.

E. Curtain Tieback: Nickel-plated brass chain; one at each curtain termination.

2.4 CURTAIN FABRICATION

A. Fabricate curtains as follows:

1. Width: Equal to track length from which curtain is hung plus 10 percent added fullness, but not less than 12 inches (305 mm) added fullness.
2. Length: Equal to floor-to-ceiling height, minus depth of track and carrier at top, and minus clearance above the finished floor as follows:

   a. Cubicle Curtains: 15 inches (381 mm).

3. Mesh Top: Top hem of mesh not less than 1 inch (25.4 mm) and not more than 1-1/2 inches (38 mm) wide, triple thickness, reinforced with integral web, and double lockstitched. Double lockstitch bottom of mesh directly to 1/2-inch (13-mm) triple thickness, top hem of curtain fabric.
4. Bottom Hem: Not less than 1 inch (25.4 mm) and not more than 1-1/2 inches (38 mm) wide, triple thickness, reinforced, and double lockstitched.
5. Side Hems: Not less than 1/2 inch (13 mm) and not more than 1-1/4 inches (32 mm) wide, with double turned edges, and single lockstitched.

B. Vertical Seams: Not less than 1/2 inch (13 mm) wide, double turned and double stitched.

PART 3 - EXECUTION

3.1 EXAMINATION

A. Examine substrates and conditions, with Installer present, for compliance with requirements for installation tolerances and other conditions affecting performance of the Work.

B. Proceed with installation only after unsatisfactory conditions have been corrected.

3.2 INSTALLATION

A. General: Install tracks level and plumb, according to manufacturer's written instructions.

B. Up to 20 feet (6.0 m) in length, provide track fabricated from single, continuous length.

1. Curtain Track Mounting: Surface.

C. Surface-Track Mounting: Fasten tracks to ceilings at intervals recommended by manufacturer. Fasten tracks to structure at each splice and tangent point of each corner. Center fasteners in track to ensure unencumbered carrier operation. Attach track to ceiling as follows:

1. Mechanically fasten to suspended ceiling grid with screws.

D. Track Accessories: Install splices, end caps, connectors, end stops, coupling and joining sleeves, and other accessories as required for a secure and operational installation.

E. Curtain Carriers: Provide curtain carriers adequate for 6-inch (152-mm) spacing along full length of curtain plus an additional carrier.

F. Curtains: Hang curtains on each curtain track. Secure with curtain tieback.

END OF SECTION 102123

SECTION 102239 - FOLDING PANEL PARTITIONS

PART 1 - GENERAL

1.1 RELATED DOCUMENTS

A. Drawings and general provisions of the Contract, including General and Supplementary Conditions and Division 01 Specification Sections, apply to this Section.

1.2 SUMMARY

A. Section Includes:

1. Manually operated, acoustical panel partitions.

B. Related Requirements:

1. Section 055000 "Metal Fabrications" for supports that attach supporting tracks to overhead structural system.
2. Section 092900 "Gypsum Board" for sound barrier construction above the ceiling at track.

1.3 DEFINITIONS

A. NIC: Noise Isolation Class.

B. NRC: Noise Reduction Coefficient.

C. STC: Sound Transmission Class.

1.4 PREINSTALLATION MEETINGS

A. Preinstallation Conference: Conduct conference at Project site.

1.5 ACTION SUBMITTALS

A. Product Data: For each type of product.

B. Shop Drawings: For operable panel partitions.

1. Include plans, elevations, sections, attachment details, and numbered panel installation sequence.
2. Indicate stacking and operating clearances. Indicate location and installation requirements for hardware and track, blocking, and direction of travel.

C. Samples for Initial Selection: For each type of exposed material, finish, covering, or facing.

1. Include Samples of accessories involving color selection.

D. Samples for Verification: For each type of exposed material, finish, covering, or facing, prepared on Samples of size indicated below:

1. Textile Facing Material: Full width by not less than 36-inch- (914-mm-) long section of carpet from dye lot to be used for the Work, with specified treatments applied. Show complete pattern repeat.
2. Panel Facing Material: Manufacturer's standard-size unit, not less than 3 inches (75 mm) square.
3. Panel Edge Material: Not less than 3 inches (75 mm) long.

1.6 INFORMATIONAL SUBMITTALS

A. Coordination Drawings: Reflected ceiling plans, drawn to scale, on which the following items are shown and coordinated with each other, using input from installers of the items involved:

1. Partition track, track supports and bracing, switches, turning space, and storage layout.
2. Suspended ceiling components.
3. Structural members to which suspension systems will be attached.
4. Size and location of initial access modules for acoustical tile.
5. Items penetrating finished ceiling including the following:

a. Lighting fixtures.
b. HVAC ductwork, outlets, and inlets.
c. Speakers.
d. Sprinklers.
e. Smoke detectors.
f. Access panels.

6. Plenum acoustical barriers.

B. Setting Drawings: For embedded items and cutouts required in other work, including support-beam, mounting-hole template.

C. Qualification Data: For Installer.

D. Product Test Reports: For each operable panel partition, for tests performed by a qualified testing agency.

1.7 CLOSEOUT SUBMITTALS

A. Operation and Maintenance Data: For operable panel partitions to include in maintenance manuals.

1. In addition to items specified in Section 017823 "Operation and Maintenance Data," include the following:

a. Panel finish facings and finishes for exposed trim and accessories. Include precautions for cleaning materials and methods that could be detrimental to finishes and performance.
b. Seals, hardware, track, track switches, carriers, and other operating components.
c. Electric operator and controls.

1.8 MAINTENANCE MATERIAL SUBMITTALS

A. Furnish extra materials, from the same production run, that match products installed and that are packaged with protective covering for storage and identified with labels describing contents.

1. Panel Finish-Facing Material: Furnish full width in quantity to cover both sides of two panels when installed.

1.9 QUALITY ASSURANCE

A. Installer Qualifications: An entity that employs installers and supervisors who are trained and approved by manufacturer.

1.10 DELIVERY, STORAGE, AND HANDLING

A. Protectively package and sequence panels in order for installation. Clearly mark packages and panels with numbering system used on Shop Drawings. Do not use permanent markings on panels.

1.11 WARRANTY

A. Special Warranty: Manufacturer agrees to repair or replace components of operable panel partitions that fail in materials or workmanship within specified warranty period.

1. Failures include, but are not limited to, the following:

a. Faulty operation of operable panel partitions.
b. Deterioration of metals, metal finishes, and other materials beyond normal use.

2. Warranty Period: Five years from date of Substantial Completion.

PART 2 - PRODUCTS

2.1 PERFORMANCE REQUIREMENTS

A. Acoustical Performance: Provide operable panel partitions tested by a qualified testing agency for the following acoustical properties according to test methods indicated:

1. Sound-Transmission Requirements: Operable panel partition assembly tested for laboratory sound-transmission loss performance according to ASTM E 90, determined by ASTM E 413, and rated for not less than the STC indicated.
2. Noise-Reduction Requirements: Operable panel partition assembly, identical to partition tested for STC, tested for sound-absorption performance according to ASTM C 423, and rated for not less than the NRC indicated.
3. Noise-Isolation Requirements: Installed operable panel partition assembly, identical to partition tested for STC, tested for NIC according to ASTM E 336, determined by ASTM E 413, and rated for 10 dB less than STC value indicated.

B. Fire-Test-Response Characteristics: Provide panels with finishes complying with one of the following as determined by testing identical products by a testing and inspecting agency acceptable to authorities having jurisdiction:

1. Surface-Burning Characteristics: Comply with ASTM E 84; testing by a qualified testing agency. Identify products with appropriate markings of applicable testing agency.

a. Flame-Spread Index: 25 or less.

b. Smoke-Developed Index: 450 or less.

2. Fire Growth Contribution: Complying with acceptance criteria of local code and authorities having jurisdiction when tested according to NFPA 265 Method B Protocol or NFPA 286.

2.2 OPERABLE ACOUSTICAL PANELS

A. Operable Acoustical Panels: Partition system, including panels, seals, finish facing, suspension system, operators, and accessories.

1. Basis-of-Design Product: Subject to compliance with requirements, provide Modernfold, Inc; Acousti-Seal #932 manually-operated paired panel operable partition or a comparable product by one of the following:

a. Hufcor, Inc.
b. Moderco Inc.
c. Panelfold Inc.

B. Panel Operation: Manually operated, paired panels.

C. Panel Construction: As required to support panel from suspension components and with reinforcement for hardware attachment. Fabricate panels with tight hairline joints and concealed fasteners. Fabricate panels so finished in-place partition is rigid; level; plumb; aligned, with tight joints and uniform appearance; and free of bow, warp, twist, deformation, and surface and finish irregularities.

D. Dimensions: Fabricate operable acoustical panel partitions to form an assembled system of dimensions indicated and verified by field measurements.

1. Panel Width: Standard widths.

E. STC: Not less than 50.

F. Panel Weight: 8 lb/sq. ft. (40 kg/sq. m) maximum.

G. Panel Thickness: Minimum dimension of 3 inches (75 mm).

H. Panel Materials:

1. Steel Frame: Steel sheet, manufacturer's standard nominal minimum thickness for uncoated steel.
2. Medium-Density Fiberboard: ANSI A208.2.

I. Panel Closure: Manufacturer's standard unless otherwise indicated.

1. Initial Closure: Resilient, bulb-shaped acoustical seal.
2. Final Closure: Resilient, bulb-shaped acoustical seal.

J. Hardware: Manufacturer's standard as required to operate operable panel partition and accessories; with decorative, protective finish.

1. Hinges: Manufacturer's standard.

K. Finish Facing:

1. Cafeteria side: Vinyl-coated fabric wall covering.

2. Gym side: Carpet wall covering.

2.3 SEALS

A. Description: Seals that produce operable panel partitions complying with performance requirements and the following:

1. Manufacturer's standard seals unless otherwise indicated.
2. Seals made from materials and in profiles that minimize sound leakage.
3. Seals fitting tight at contact surfaces and sealing continuously between adjacent panels and between operable panel partition perimeter and adjacent surfaces, when operable panel partition is extended and closed.

B. Vertical Seals: Deep-nesting, interlocking astragals mounted on each edge of panel, with continuous, resilient acoustical seal.

C. Horizontal Top Seals: Continuous-contact, resilient seal exerting uniform constant pressure on track.

D. Horizontal Bottom Seals: Resilient , mechanical, retractable, constant-force-contact seal exerting uniform constant pressure on floor when extended, ensuring horizontal and vertical sealing and resisting panel movement.

1. Automatically Operated for Acoustical Panels: Extension and retraction of bottom seal automatically operated by movement of partition, with operating range not less than 1 inch (25 mm) between retracted seal and floor finish.

2.4 PANEL FINISH FACINGS

A. Description: Finish facings for panels that comply with indicated fire-test-response characteristics and that are factory applied to operable panel partitions with appropriate backing, using mildew-resistant nonstaining adhesive as recommended by facing manufacturer's written instructions.

1. Apply one-piece, seamless facings free of air bubbles, wrinkles, blisters, and other defects, with invisible seams complying with Shop Drawings for location, and with no gaps or overlaps. Horizontal seams are not permitted. Tightly secure and conceal raw and selvage edges of facing for finished appearance.
2. Where facings with directional or repeating patterns or directional weave are indicated, mark facing top and attach facing in same direction.
3. Match facing pattern 72 inches (1830 mm) above finished floor.

B. Vinyl-Coated Fabric Wall Covering: Manufacturer's standard, mildew-resistant, washable, stain-resistant, vinyl-coated fabric wall covering; complying with CFFA-W-101-D for type indicated; Class A.

1. Antimicrobial Treatment: Additives capable of inhibiting growth of bacteria, fungi, and yeasts.
2. Color/Pattern: As selected by Architect from manufacturer’s full range.

C. Carpet Wall Covering: Manufacturer's standard, from same dye lot, treated to resist stains.

1. Color/Pattern: As selected by Architect from manufacturer’s full range.

D. Paint: Manufacturer's standard factory-painted finish.

1. Color: As selected by Architect from manufacturer's full range.

E. Cap-Trimmed Edges: Protective perimeter-edge trim with tight hairline joints concealing edges of panel and finish facing, finished as follows:

1. Steel, Painted: Finished with manufacturer's color as selected by Architect from manufacturer's full range.

F. Trimless Edges: Fabricate exposed panel edges so finish facing wraps uninterrupted around panel, covering edge and resulting in an installed partition with facing visible on vertical panel edges, without trim, for minimal sightlines at panel-to-panel joints.

2.5 SUSPENSION SYSTEMS

A. Tracks: Steel with adjustable steel hanger rods for overhead support, designed for operation, size, and weight of operable panel partition indicated. Size track to support partition operation and storage without damage to suspension system, operable panel partitions, or adjacent construction. Limit track deflection to no more than 0.10 inch (2.54 mm) between bracket supports. Provide a continuous system of track sections and accessories to accommodate configuration and layout indicated for partition operation and storage.

1. Panel Guide: Guide on both sides of the track to facilitate straightening of the panels; finished with factory-applied, decorative, protective finish.
2. Head Closure Trim: As required for acoustical performance; with factory-applied, decorative, protective finish.

B. Carriers: Trolley system as required for configuration type, size, and weight of partition and for easy operation; with ball-bearing wheels.

C. Track Intersections, Switches, and Accessories: As required for operation, storage, track configuration, and layout indicated for operable panel partitions, and compatible with partition assembly specified. Fabricate track intersections and switches from steel or aluminum.

D. Steel Finish: Manufacturer's standard, factory-applied, corrosion-resistant, protective coating unless otherwise indicated.

2.6 ACCESSORIES

A. Pass Doors: Swinging door built into and matching panel materials, construction, acoustical qualities, finish and thickness, complete with frames and operating hardware. Hinges finished to match other exposed hardware.

1. Accessibility Standard: Fabricate doors to comply with applicable provisions in the USDOJ's "2010 ADA Standards for Accessible Design" and ICC A117.1.
2. Single Pass Door: 36 by 84 inches (914 by 2134 mm).
3. Pass-Door Hardware: Equip pass door with the following:

a. Door Seals: Mechanically operated floor seal on panels containing pass doors.
b. Panic hardware.
c. Concealed door closer.
d. Door Viewer: Installed with view in direction of swing.
e. Exit Sign: Recessed, self-illuminated on each side of door.
f. Latchset: Passage set.
g. Lock: Key-operated lock with cylinder, keyed to master key system, operable from both sides of door. Include two keys per lock.

B. Storage Pocket Door: Full height at end of partition runs to conceal stacked partition; of same materials, finish, construction, thickness, and acoustical qualities as panels; complete with operating hardware and acoustical seals at soffit, floor, and jambs. Hinges in finish to match other exposed hardware.

1. Manufacturer's standard method to secure storage pocket door in closed position.

PART 3 - EXECUTION

3.1 EXAMINATION

A. Examine flooring, floor levelness, structural support, and opening, with Installer present, for compliance with requirements for installation tolerances and other conditions affecting performance of operable panel partitions.

B. Proceed with installation only after unsatisfactory conditions have been corrected.

3.2 INSTALLATION

A. Install operable panel partitions and accessories after other finishing operations, including painting, have been completed in area of partition installation.

B. Install panels in numbered sequence indicated on Shop Drawings.

C. Broken, cracked, chipped, deformed, or unmatched panels are not acceptable.

D. Broken, cracked, deformed, or unmatched gasketing or gasketing with gaps at butted ends is not acceptable.

E. Light-Leakage Test: Illuminate one side of partition installation and observe vertical joints and top and bottom seals for voids. Adjust partitions for alignment and full closure of vertical joints and full closure along top and bottom seals. Perform test and make adjustments before NIC testing.

3.3 ADJUSTING

A. Adjust operable panel partitions, hardware, and other moving parts to function smoothly, and lubricate as recommended by manufacturer.

B. Adjust pass doors and storage pocket doors to operate smoothly and easily, without binding or warping.

C. Verify that safety devices are properly functioning.

3.4 MAINTENANCE SERVICE

A. Maintenance Service: Beginning at Substantial Completion, maintenance service shall include 12 months' full maintenance by manufacturer's authorized service representative. Include quarterly preventive maintenance, repair or replacement of worn or defective components, lubrication, cleaning, and adjusting as required for proper operable-partition operation. Parts and supplies shall be manufacturer's authorized replacement parts and supplies.

3.5 DEMONSTRATION

A. Engage a factory-authorized service representative to train Owner's maintenance personnel to adjust, operate, and maintain operable panel partitions.

END OF SECTION 102239

SECTION 102800 - TOILET, BATH, AND LAUNDRY ACCESSORIES

PART 1 - GENERAL

1.1 RELATED DOCUMENTS

A. Drawings and general provisions of the Contract, including General and Supplementary Conditions and Division 01 Specification Sections, apply to this Section.

1.2 SUMMARY

A. Section Includes:

1. Public-use washroom accessories.
2. Public-use shower room accessories.
3. Warm-air dryers.

B. Related Requirements:

1. Section 224000 "Plumbing Fixtures" for under lavatory guards and custodial accessories.

1.3 COORDINATION

A. Coordinate accessory locations with other work to prevent interference with clearances required for access by people with disabilities, and for proper installation, adjustment, operation, cleaning, and servicing of accessories.

B. Deliver inserts and anchoring devices set into concrete or masonry as required to prevent delaying the Work.

1.4 ACTION SUBMITTALS

A. Product Data: For each type of product.

1. Include construction details, material descriptions, dimensions of individual components and profiles, and finishes.
2. Include anchoring and mounting requirements, including requirements for cutouts in other work and substrate preparation.
3. Include electrical characteristics.

B. Samples: Full size, for each exposed product and for each finish specified.

C. Product Schedule: Indicating types, quantities, sizes, and installation locations by room of each accessory required.

1. Identify locations using room designations indicated.
2. Identify accessories using designations indicated.

1.5 CLOSEOUT SUBMITTALS

A. Maintenance Data: For accessories to include in maintenance manuals.

1.6 WARRANTY

A. Manufacturer's Special Warranty for Mirrors: Manufacturer agrees to repair or replace mirrors that fail in materials or workmanship within specified warranty period.

1. Failures include, but are not limited to, visible silver spoilage defects.
2. Warranty Period: 15 years from date of Substantial Completion.

PART 2 - PRODUCTS

2.1 PERFORMANCE REQUIREMENTS

A. Electrical Components, Devices, and Accessories: Listed and labeled as defined in NFPA 70, by a qualified testing agency, and marked for intended location and application.

2.2 PUBLIC-USE WASHROOM ACCESSORIES

A. Source Limitations: Obtain public-use washroom accessories from single source from single manufacturer.

B. Manufacturers: Subject to compliance with requirements, provide basis-of-design product, or comparable product by one of the following;

1. AJW Architectural Products.
2. Bobrick Washroom Equipment, Inc.
3. Bradley Corporation.

C. Toilet Tissue (Jumbo-Roll) Dispenser (A):

1. Basis-of-Design Product: Subject to compliance with requirements, provide Uline H-1347.
2. Description: Two-roll unit with sliding panel to expose other roll.
3. Mounting: Surface mounted.
4. Capacity: 9-inch- (228-mm-) diameter rolls.
5. Material and Finish: ABS plastic.
6. Lockset: Tumbler type.

D. Liquid-Soap Dispenser (B): Furnished by Owner and installed by contractor.

E. Grab Bar (C, D, E):

1. Basis-of-Design Product: Subject to compliance with requirements, provide Bobrick Washroom Equipment, Inc.; 6806.99x18, 6806.99x36, and 6806.99x42 or a comparable product.
2. Mounting: Flanges with concealed fasteners.
3. Material: Stainless steel, 0.05 inch (1.3 mm) thick.

a. Finish: Smooth, No. 4 finish (satin) on ends and slip-resistant texture in grip area.

4. Outside Diameter: 1-1/2 inches (38 mm).
5. Configuration and Length: Straight, 18 inches (457 mm), 36 inches (914 mm), and 42 inches (1,067 mm) long.

F. Sanitary-Napkin Disposal Unit (F):

1. Basis-of-Design Product: Subject to compliance with requirements, provide Bobrick Washroom Equipment, Inc.; B-270 or a comparable product.
2. Mounting: Surface mounted.
3. Door or Cover: Self-closing, disposal-opening cover.
4. Receptacle: Removable.
5. Material and Finish: Stainless steel, No. 4 finish (satin).

G. Paper Towel Dispenser (G): Furnished by Owner and installed by contractor.

H. Mirror Unit (H):

1. Basis-of-Design Product: Subject to compliance with requirements, provide Bobrick Washroom Equipment, Inc.; B-290-2460 or a comparable product.
2. Frame: Stainless-steel angle, 0.05 inch (1.3 mm) thick.

   a. Corners: Welded and ground smooth.

3. Hangers: Produce rigid, tamper- and theft-resistant installation, using method indicated below.

   a. Wall bracket of galvanized steel, equipped with concealed locking devices requiring a special tool to remove.

4. Size: As indicated on Drawings.

2.3 PUBLIC-USE SHOWER ROOM ACCESSORIES

A. Source Limitations: Obtain public-use shower room accessories from single source from single manufacturer.

B. Shower Curtain Rod (K):

1. Basis-of-Design Product: Subject to compliance with requirements, provide Bobrick Washroom Equipment, Inc.; B-6047 or a comparable product.
2. Description: 1-1/4-inch (32-mm) OD; fabricated from nominal 0.05-inch- (1.3-mm-) thick stainless steel.
3. Mounting Flanges: Stainless-steel flanges designed for exposed fasteners.
4. Finish: Stainless steel, No. 4 finish (satin).

C. Shower Curtain and Hooks (K):

1. Basis-of-Design Product: Subject to compliance with requirements, provide Bobrick Washroom Equipment, Inc.; 204-1 and 204-3 or comparable product.
2. Size: Minimum 6 inches (152 mm) wider than opening by 72 inches (1828 mm) high.
3. Material: Vinyl, minimum 0.006 inch (0.15 mm) thick, opaque, matte.
4. Color: White.
5. Grommets: Corrosion resistant at minimum 6 inches (152 mm) o.c. through top hem.
6. Shower Curtain Hooks: Chrome-plated or stainless-steel, spring wire curtain hooks with snap fasteners, sized to accommodate specified curtain rod. Provide one hook per curtain grommet.

D. Robe Hook (L):

1. Basis-of-Design Product: Subject to compliance with requirements, provide Bobrick Washroom Equipment, Inc.; B6727 or a comparable product.
2. Description: Double-prong unit.
3. Material and Finish: Stainless steel, No. 4 finish (satin).

2.4 WARM-AIR DRYERS

A. Source Limitations: Obtain warm-air dryers from single source from single manufacturer.

B. High-Speed Warm-Air Dryer (M):

1. Product: Subject to compliance with requirements, provide Dyson Airblade DB AB14 Gray.
2. Description: High-speed, warm-air hand dryer for rapid hand drying.
3. Mounting: Surface mounted, with low-profile design.
4. Operation: Electronic-sensor activated with operation time of 10 to 20 seconds.
5. Cover Material and Finish: Molded polycarbonate, nickel.
6. Electrical Requirements: 115 V, 10 A, 1000 W.

2.5 UNDERLAVATORY GUARDS

A. Underlavatory Guard (J):

1. See Plumbing Fixture Specification.

2.6 CUSTODIAL ACCESSORIES

A. Source Limitations: Obtain custodial accessories from single source from single manufacturer.

B. Mop and Broom Holder:

1. See Plumbing Fixture Specifications.

2.7 MATERIALS

A. Stainless Steel: ASTM A 666, Type 304, 0.031-inch (0.8-mm) minimum nominal thickness unless otherwise indicated.

B. Brass: ASTM B 19, flat products; ASTM B 16/B 16M, rods, shapes, forgings, and flat products with finished edges; or ASTM B 30, castings.

C. Steel Sheet: ASTM A 1008/A 1008M, Designation CS (cold rolled, commercial steel), 0.036-inch (0.9-mm) minimum nominal thickness.

D. Galvanized-Steel Sheet: ASTM A 653/A 653M, with G60 (Z180) hot-dip zinc coating.

E. Galvanized-Steel Mounting Devices: ASTM A 153/A 153M, hot-dip galvanized after fabrication.

F. Fasteners: Screws, bolts, and other devices of same material as accessory unit and tamper-and-theft resistant where exposed, and of galvanized steel where concealed.

G. Chrome Plating: ASTM B 456, Service Condition Number SC 2 (moderate service).

H. Mirrors: ASTM C 1503, Mirror Glazing Quality, clear-glass mirrors, nominal 6.0 mm thick.

2.8 FABRICATION

A. General: Fabricate units with tight seams and joints, and exposed edges rolled. Hang doors and access panels with full-length, continuous hinges. Equip units for concealed anchorage and with corrosion-resistant backing plates.

B. Keys: Provide universal keys for internal access to accessories for servicing and resupplying. Provide minimum of six keys to Owner's representative.

PART 3 - EXECUTION

3.1 INSTALLATION

A. Install accessories according to manufacturers' written instructions, using fasteners appropriate to substrate indicated and recommended by unit manufacturer. Install units level, plumb, and firmly anchored in locations and at heights indicated.

B. Grab Bars: Install to withstand a downward load of at least 250 lbf (1112 N), when tested according to ASTM F 446.

3.2 ADJUSTING AND CLEANING

A. Adjust accessories for unencumbered, smooth operation. Replace damaged or defective items.

B. Remove temporary labels and protective coatings.

C. Clean and polish exposed surfaces according to manufacturer's written instructions.

END OF SECTION 102800

SECTION 104413 - FIRE PROTECTION CABINETS

PART 1 - GENERAL

1.1 RELATED DOCUMENTS

A. Drawings and general provisions of the Contract, including General and Supplementary Conditions and Division 01 Specification Sections, apply to this Section.

1.2 SUMMARY

A. Section Includes:

1. Fire-protection cabinets for the following:

a. Portable fire extinguishers.
b. Fire hose valves.

B. Related Requirements:

1. Section 104416 "Fire Extinguishers."
2. Section 211200 "Fire-Suppression Standpipes" for fire-hose connections.

1.3 ACTION SUBMITTALS

A. Product Data: For each type of product. Show door hardware, cabinet type, trim style, and panel style. Include roughing-in dimensions and details showing recessed-, semirecessed-, or surface-mounting method and relationships of box and trim to surrounding construction.

1. Show location of knockouts for hose valves.

B. Shop Drawings: For fire-protection cabinets. Include plans, elevations, sections, details, and attachments to other work.

C. Samples: For each type of exposed finish required.

D. Product Schedule: For fire-protection cabinets. Indicate whether recessed, semirecessed, or surface mounted. Coordinate final fire-protection cabinet schedule with fire-extinguisher schedule to ensure proper fit and function. Use same designations indicated on Drawings.

1.4 CLOSEOUT SUBMITTALS

A. Maintenance Data: For fire-protection cabinets to include in maintenance manuals.

1.5 COORDINATION

A. Coordinate size of fire-protection cabinets to ensure that type and capacity of fire extinguishers, fire hoses, hose valves, and hose racks indicated are accommodated.

B. Coordinate sizes and locations of fire-protection cabinets with wall depths.

1.6 SEQUENCING

A. Apply decals and vinyl lettering on field-painted fire-protection cabinets after painting is complete.

PART 2 - PRODUCTS

2.1 PERFORMANCE REQUIREMENTS

A. Fire-Rated Fire-Protection Cabinets: Listed and labeled to comply with requirements in ASTM E 814 for fire-resistance rating of walls where they are installed.

2.2 FIRE-PROTECTION CABINET (**FEC**)

A. Cabinet Type: Suitable for fire extinguisher.

1. Basis-of-Design Product: Subject to compliance with requirements, provide JL Industries, Inc.; a division of the Activar Construction Products Group; Cosmopolitan 1037-G or a comparable product by one of the following:

a. Fire-End & Croker Corporation.
b. Larsens Manufacturing Company.
c. MOON American.
d. Potter Roemer LLC.

B. Cabinet Construction: Nonrated.

C. Cabinet Material: Cold-rolled steel sheet.

1. Shelf: Same metal and finish as cabinet.

D. Semirecessed Cabinet: One-piece combination trim and perimeter door frame overlapping surrounding wall surface with exposed trim face and wall return at outer edge (backbend).

1. Rolled-Edge Trim: 2-1/2-inch to 3-inch (64-mm to 76-mm) backbend depth.

E. Cabinet Trim Material: Same material and finish as door.

F. Door Material: Stainless-steel sheet.

G. Door Style: Fully glazed panel with frame.

H. Door Glazing: Tempered float glass (clear).

I. Door Hardware: Manufacturer's standard door-operating hardware of proper type for cabinet type, trim style, and door material and style indicated.

1. Provide continuous hinge, of same material and finish as trim, permitting door to open 180 degrees.

J. Accessories:

1. Mounting Bracket: Manufacturer's standard steel, designed to secure fire extinguisher to fire-protection cabinet, of sizes required for types and capacities of fire extinguishers indicated, with plated or baked-enamel finish.
2. Lettered Door Handle: One-piece, cast-iron door handle with the word "FIRE" embossed into face.
3. Door Lock: Cam lock that allows door to be opened during emergency by pulling sharply on door handle.
4. Identification: Lettering complying with authorities having jurisdiction for letter style, size, spacing, and location. Locate as indicated.

    a. Identify fire extinguisher in fire-protection cabinet with the words "FIRE EXTINGUISHER."

        1) Location: Applied to cabinet glazing.
        2) Application Process: Decals.
        3) Lettering Color: Red.
        4) Orientation: Vertical.

K. Materials:

1. Cold-Rolled Steel: ASTM A 1008/A 1008M, Commercial Steel (CS), Type B.

    a. Finish: Baked enamel or powder coat.
    b. Color: As selected by Architect from full range of industry colors and color densities.

2. Stainless Steel: ASTM A 666, Type 304.

    a. Finish: No. 4 directional satin finish.

3. Tempered Float Glass: ASTM C 1048, Kind FT, Condition A, Type I, Quality q3, 3 mm thick, Class 1 (clear).

2.3 FIRE-PROTECTION CABINET (**FEC-2**)

A. Cabinet Type: Suitable for fire extinguisher.

1. Basis-of-Design Product: Subject to compliance with requirements, provide JL Industries, Inc.; a division of the Activar Construction Products Group; Cosmopolitan FX2 1037-G or a comparable product by one of the following:

    a. Fire-End & Croker Corporation.
    b. Larsens Manufacturing Company.
    c. MOON American.
    d. Potter Roemer LLC.

B. Cabinet Construction: 1-hour fire rated.

1. Fire-Rated Cabinets: Construct fire-rated cabinets with double walls fabricated from 0.043-inch- (1.09-mm-) thick cold-rolled steel sheet lined with minimum 5/8-inch- (16-mm-) thick fire-barrier material. Provide factory-drilled mounting holes.

C. Cabinet Material: Cold-rolled steel sheet.

1. Shelf: Same metal and finish as cabinet.

D. Semirecessed Cabinet: One-piece combination trim and perimeter door frame overlapping surrounding wall surface with exposed trim face and wall return at outer edge (backbend).

1. Rolled-Edge Trim: 2-1/2-inch to 3-inch (64-mm to 76-mm) backbend depth.

E. Cabinet Trim Material: Same material and finish as door.

F. Door Material: Stainless-steel sheet.

G. Door Style: Fully glazed panel with frame.

H. Door Glazing: Tempered float glass (clear).

I. Door Hardware: Manufacturer's standard door-operating hardware of proper type for cabinet type, trim style, and door material and style indicated.

1. Provide continuous hinge, of same material and finish as trim, permitting door to open 180 degrees.

J. Accessories:

1. Mounting Bracket: Manufacturer's standard steel, designed to secure fire extinguisher to fire-protection cabinet, of sizes required for types and capacities of fire extinguishers indicated, with plated or baked-enamel finish.
2. Lettered Door Handle: One-piece, cast-iron door handle with the word "FIRE" embossed into face.
3. Door Lock: Cam lock that allows door to be opened during emergency by pulling sharply on door handle.
4. Identification: Lettering complying with authorities having jurisdiction for letter style, size, spacing, and location. Locate as indicated.

a. Identify fire extinguisher in fire-protection cabinet with the words "FIRE EXTINGUISHER."

1) Location: Applied to cabinet glazing.
2) Application Process: Decals.
3) Lettering Color: Red.
4) Orientation: Vertical.

K. Materials:

1. Cold-Rolled Steel: ASTM A 1008/A 1008M, Commercial Steel (CS), Type B.

a. Finish: Baked enamel or powder coat.
b. Color: As selected by Architect from full range of industry colors and color densities.

2. Stainless Steel: ASTM A 666, Type 304.

a. Finish: No. 4 directional satin finish.

3. Tempered Float Glass: ASTM C 1048, Kind FT, Condition A, Type I, Quality q3, 3 mm thick, Class 1 (clear).

2.4 FIRE-PROTECTION CABINET (**FVC**)

A. Cabinet Type: Suitable for fire hose valve.

1. Basis-of-Design Product: Subject to compliance with requirements, provide JL Industries, Inc.; a division of the Activar Construction Products Group; Crownline 8517-W or a comparable product by one of the following:

a. Fire-End & Croker Corporation.
b. Larsens Manufacturing Company.
c. MOON American.
d. Potter Roemer LLC.

B. Cabinet Construction: Nonrated.

C. Cabinet Material: Cold-rolled steel sheet.

1. Shelf: Same metal and finish as cabinet.

D. Semirecessed Cabinet: One-piece combination trim and perimeter door frame overlapping surrounding wall surface with exposed trim face and wall return at outer edge (backbend).

1. Rolled-Edge Trim: 2-1/2-inch to 3-inch (64-mm to 76-mm) backbend depth.

E. Surface-Mounted Cabinet: Cabinet box fully exposed and mounted directly on wall with no trim.

F. Cabinet Trim Material: Same material and finish as door.

G. Door Material: Stainless-steel sheet.

H. Door Style: Vertical duo panel with frame.

I. Door Glazing: Tempered float glass (clear).

J. Door Hardware: Manufacturer's standard door-operating hardware of proper type for cabinet type, trim style, and door material and style indicated.

1. Provide continuous hinge, of same material and finish as trim, concealed hinge permitting door to open 180 degrees.

K. Accessories:

1. Door Lock: Cam lock that allows door to be opened during emergency by pulling sharply on door handle.
2. Identification: Lettering complying with authorities having jurisdiction for letter style, size, spacing, and location. Locate as indicated.

a. Identify valve in fire-protection cabinet with the words "FIRE DEPT. VALVE."

1) Location: Applied to cabinet glazing.
2) Application Process: Decals.
3) Lettering Color: Red.
4) Orientation: Vertical.

L. Materials:

1. Cold-Rolled Steel: ASTM A 1008/A 1008M, Commercial Steel (CS), Type B.

    a. Finish: Baked enamel or powder coat.
    b. Color: As selected by Architect from full range of industry colors and color densities.

2. Stainless Steel: ASTM A 666, Type 304.

    a. Finish: No. 4 directional satin finish.

3. Tempered Float Glass: ASTM C 1048, Kind FT, Condition A, Type I, Quality q3, 3 mm thick, Class 1 (clear).

2.5 FABRICATION

A. Fire-Protection Cabinets: Provide manufacturer's standard box (tub) with trim, frame, door, and hardware to suit cabinet type, trim style, and door style indicated.

    1. Weld joints and grind smooth.
    2. Provide factory-drilled mounting holes.
    3. Prepare doors and frames to receive locks.
    4. Install door locks at factory.

B. Cabinet Doors: Fabricate doors according to manufacturer's standards, from materials indicated and coordinated with cabinet types and trim styles.

    1. Fabricate door frames with tubular stiles and rails and hollow-metal design, minimum 1/2 inch (13 mm) thick.
    2. Miter and weld perimeter door frames.

C. Cabinet Trim: Fabricate cabinet trim in one piece with corners mitered, welded, and ground smooth.

2.6 GENERAL FINISH REQUIREMENTS

A. Comply with NAAMM's AMP 500, "Metal Finishes Manual for Architectural and Metal Products," for recommendations for applying and designating finishes.

B. Protect mechanical finishes on exposed surfaces of fire-protection cabinets from damage by applying a strippable, temporary protective covering before shipping.

C. Finish fire-protection cabinets after assembly.

D. Appearance of Finished Work: Noticeable variations in same piece are not acceptable. Variations in appearance of adjoining components are acceptable if they are within the range of approved Samples and are assembled or installed to minimize contrast.

PART 3 - EXECUTION

3.1 EXAMINATION

A. Examine roughing-in for hose valves and cabinets to verify actual locations of piping connections before cabinet installation.

B. Examine walls and partitions for suitable framing depth and blocking where recessed and semirecessed cabinets will be installed.

C. Proceed with installation only after unsatisfactory conditions have been corrected.

3.2 PREPARATION

A. Prepare recesses for recessed and semirecessed fire-protection cabinets as required by type and size of cabinet and trim style.

3.3 INSTALLATION

A. General: Install fire-protection cabinets in locations and at mounting heights indicated or, if not indicated, at heights indicated below:

1. Fire-Protection Cabinets: 54 inches (1372 mm) above finished floor to top of cabinet.

B. Fire-Protection Cabinets: Fasten cabinets to structure, square and plumb.

1. Unless otherwise indicated, provide recessed fire-protection cabinets. If wall thickness is inadequate for recessed cabinets, provide semirecessed fire-protection cabinets.
2. Provide inside latch and lock for break-glass panels.
3. Fasten mounting brackets to inside surface of fire-protection cabinets, square and plumb.

C. Identification: Apply decals at locations indicated.

3.4 ADJUSTING AND CLEANING

A. Remove temporary protective coverings and strippable films, if any, as fire-protection cabinets are installed unless otherwise indicated in manufacturer's written installation instructions.

B. Adjust fire-protection cabinet doors to operate easily without binding. Verify that integral locking devices operate properly.

C. On completion of fire-protection cabinet installation, clean interior and exterior surfaces as recommended by manufacturer.

D. Touch up marred finishes, or replace fire-protection cabinets that cannot be restored to factory-finished appearance. Use only materials and procedures recommended or furnished by fire-protection cabinet and mounting bracket manufacturers.

E. Replace fire-protection cabinets that have been damaged or have deteriorated beyond successful repair by finish touchup or similar minor repair procedures.

END OF SECTION 104413

SECTION 104416 - FIRE EXTINGUISHERS

PART 1 - GENERAL

1.1 RELATED DOCUMENTS

A. Drawings and general provisions of the Contract, including General and Supplementary Conditions and Division 01 Specification Sections, apply to this Section.

1.2 SUMMARY

A. Section includes portable, hand-carried fire extinguishers and mounting brackets for fire extinguishers.

B. Related Requirements:

1. Section 104413 "Fire Protection Cabinets."
2. Section 233813 "Commercial-Kitchen Hoods" for fire-extinguishing systems provided as part of commercial-kitchen exhaust hoods.

1.3 ACTION SUBMITTALS

A. Product Data: For each type of product. Include rating and classification, material descriptions, dimensions of individual components and profiles, and finishes for fire extinguisher and mounting brackets.

1.4 CLOSEOUT SUBMITTALS

A. Operation and Maintenance Data: For fire extinguishers to include in maintenance manuals.

1.5 COORDINATION

A. Coordinate type and capacity of fire extinguishers with fire-protection cabinets to ensure fit and function.

1.6 WARRANTY

A. Special Warranty: Manufacturer's standard form in which manufacturer agrees to repair or replace fire extinguishers that fail in materials or workmanship within specified warranty period.

1. Failures include, but are not limited to, the following:

   a. Failure of hydrostatic test according to NFPA 10.
   b. Faulty operation of valves or release levers.

2. Warranty Period: Six years from date of Substantial Completion.

PART 2 - PRODUCTS

2.1 PERFORMANCE REQUIREMENTS

A. NFPA Compliance: Fabricate and label fire extinguishers to comply with NFPA 10, "Portable Fire Extinguishers."

B. Fire Extinguishers: Listed and labeled for type, rating, and classification by an independent testing agency acceptable to authorities having jurisdiction.

1. Provide fire extinguishers approved, listed, and labeled by FM Global.

2.2 PORTABLE, HAND-CARRIED FIRE EXTINGUISHERS

A. Fire Extinguishers: Type, size, and capacity for each fire-protection cabinet and mounting bracket indicated.

1. Basis-of-Design Product: Subject to compliance with requirements, provide JL Industries, Inc.; a division of the Activar Construction Products Group; Cosmic 10E and Saturn 25 or a comparable product by one of the following:

a. Amerex Corporation.
b. Ansul Incorporated; Tyco International.
c. Badger Fire Protection.
d. Buckeye Fire Equipment Company.
e. Fire End & Croker Corporation.
f. Guardian Fire Equipment, Inc.
g. Kidde Residential and Commercial Division.
h. Larsens Manufacturing Company.
i. MOON American.
j. Potter Roemer LLC.

2. Valves: Manufacturer's standard.
3. Handles and Levers: Manufacturer's standard.
4. Instruction Labels: Include pictorial marking system complying with NFPA 10, Appendix B.

B. Wet-Chemical Type (**FE-K**): UL-rated 2-A:1-B:C:K, 2.5-gal. (9.5-L) nominal capacity, with potassium acetate-based chemical in stainless-steel container; with pressure-indicating gage.

C. Multipurpose Dry-Chemical Type in Steel Container (**FE**): UL-rated 4-A:80-B:C, 10-lb (4.5-kg) nominal capacity, with monoammonium phosphate-based dry chemical in enameled-steel container.

2.3 MOUNTING BRACKETS (**FE**, **FE-K**)

A. Mounting Brackets: Manufacturer's standard steel, designed to secure fire extinguisher to wall or structure, of sizes required for types and capacities of fire extinguishers indicated, with plated or red baked-enamel finish.

B. Identification: Lettering complying with authorities having jurisdiction for letter style, size, spacing, and location. Locate as indicated by Architect.

1. Identify bracket-mounted fire extinguishers with the words "FIRE EXTINGUISHER" in red letter decals applied to mounting surface.

    a. Orientation: Vertical.

PART 3 - EXECUTION

3.1 EXAMINATION

A. Examine fire extinguishers for proper charging and tagging.

1. Remove and replace damaged, defective, or undercharged fire extinguishers.

B. Proceed with installation only after unsatisfactory conditions have been corrected.

3.2 INSTALLATION

A. General: Install fire extinguishers and mounting brackets in locations indicated and in compliance with requirements of authorities having jurisdiction.

1. Mounting Brackets: 48 inches (1219 mm) above finished floor to top of fire extinguisher.

B. Mounting Brackets: Fasten mounting brackets to surfaces, square and plumb, at locations indicated.

END OF SECTION 104416

SECTION 105113 - METAL LOCKERS

PART 1 - GENERAL

1.1 RELATED DOCUMENTS

A. Drawings and general provisions of the Contract, including General and Supplementary Conditions and Division 01 Specification Sections, apply to this Section.

1.2 SUMMARY

A. Section Includes:

1. Welded corridor lockers.

1.3 ACTION SUBMITTALS

A. Product Data: For each type of product.

1. Include construction details, material descriptions, dimensions of individual components and profiles, and finishes for each type of metal locker.

B. Shop Drawings: For metal lockers.

1. Include plans, elevations, sections, and attachment details.
2. Show locker trim and accessories.
3. Include locker identification system and numbering sequence.

C. Samples: For each color specified, in manufacturer's standard size.

1.4 CLOSEOUT SUBMITTALS

A. Maintenance Data: For adjusting, repairing, and replacing locker doors and latching mechanisms to include in maintenance manuals.

1.5 DELIVERY, STORAGE, AND HANDLING

A. Do not deliver metal lockers until spaces to receive them are clean, dry, and ready for their installation.

1.6 FIELD CONDITIONS

A. Field Measurements: Verify actual dimensions of recessed openings by field measurements before fabrication.

1.7 COORDINATION

A. Coordinate sizes and locations of concrete bases for metal lockers.

B. Coordinate sizes and locations of framing, blocking, furring, reinforcements, and other related units of work specified in other Sections to ensure that metal lockers can be supported and installed as indicated.

1.8 WARRANTY

A. Special Warranty: Manufacturer agrees to repair or replace components of metal lockers that fail in materials or workmanship, excluding finish, within specified warranty period.

1. Failures include, but are not limited to, the following:

a. Structural failures.
b. Faulty operation of latches and other door hardware.

2. Damage from deliberate destruction and vandalism is excluded.
3. Warranty Period for Welded Metal Lockers: 10 years from date of Substantial Completion.

PART 2 - PRODUCTS

2.1 MANUFACTURERS

A. Source Limitations: Obtain metal lockers and accessories from single source from single locker manufacturer.

2.2 PERFORMANCE REQUIREMENTS

A. Accessibility Standard: For lockers indicated to be accessible, comply with applicable provisions in the USDOJ's "2010 ADA Standards for Accessible Design" and ICC A117.1.

2.3 WELDED CORRIDOR LOCKERS (ML-1)

A. Products: Subject to compliance with requirements, provide one of the following:

1. DeBourgh Mfg. Co.; All American Corridor.
2. Lyon Workspace Products, LLC; All-Welded.
3. Penco Products, Inc; All-Welded.
4. Republic Storage Systems, LLC; All-Welded Ventilated.

B. Doors: One piece; fabricated from 0.075-inch (1.90-mm) nominal-thickness steel sheet; formed into channel shape with double bend at vertical edges and with right-angle single bend at horizontal edges.

1. Reinforcement: Manufacturer's standard reinforcing angles, channels, or stiffeners for doors more than 15 inches (381 mm) wide; welded to inner face of doors.
2. Door Style: Unperforated panel.

a. Security Vents: Manufacturer's standard, stamped horizontal or vertical.

C. Body: Assembled by welding body components together. Fabricate from unperforated steel sheet with thicknesses as follows:

1. Tops, Bottoms, and Sides: 0.060-inch (1.52-mm) nominal thickness.
2. Backs: 0.048-inch (1.21-mm) nominal thickness.
3. Shelves: 0.060-inch (1.52-mm) nominal thickness, with double bend at front and single bend at sides and back.

D. Frames: Channel formed; fabricated from 0.060-inch (1.52-mm) nominal-thickness steel sheet; lapped and factory welded at corners; with top and bottom main frames factory welded into vertical main frames. Form continuous, integral, full-height door strikes on vertical main frames.

1. Cross Frames between Tiers: Channel formed and fabricated from same material as main frames; welded to vertical main frames.

E. Hinges: Welded to door and attached to door frame with no fewer than two factory-installed rivets per hinge that are completely concealed and tamper resistant when door is closed; fabricated to swing 180 degrees.

1. Knuckle Hinges: Steel, full loop, five or seven knuckles, tight pin; minimum 2 inches (51 mm) high. Provide no fewer than three hinges for each door more than 42 inches (1067 mm) high.
2. Continuous Hinges: Manufacturer's standard, steel, full height.
3. Hinges: Manufacturer's standard, steel, continuous or knuckle type.

F. Recessed Door Handle and Latch: Stainless-steel cup with integral door pull, recessed so locking device does not protrude beyond door face; pry and vandal resistant.

1. Multipoint Latching: Finger-lift latch control designed for use with built-in combination locks or padlocks; positive automatic latching and prelocking.

   a. Latch Hooks: Equip doors 48 inches (1219 mm) and higher with three latch hooks and doors less than 48 inches (1219 mm) high with two latch hooks; fabricated from 0.120-inch (3.04-mm) nominal-thickness steel sheet; welded to full-height door strikes; with resilient silencer on each latch hook.
   b. Latching Mechanism: Manufacturer's standard, rattle-free latching mechanism and moving components isolated to prevent metal-to-metal contact, and incorporating a prelocking device that allows locker door to be locked while door is open and then closed without unlocking or damaging lock or latching mechanism.

G. Identification Plates: Manufacturer's standard, etched, embossed, or stamped aluminum plates, with numbers and letters at least 3/8 inch (9 mm) high.

H. Hooks: Manufacturer's standard ball-pointed, aluminum or steel; zinc plated.

I. Continuous Sloping Tops: Fabricated from 0.048-inch (1.21-mm) nominal-thickness steel sheet, with a pitch of approximately 20 degrees.

1. Closures: Vertical-end type.

J. Filler Panels: Fabricated from 0.048-inch (1.21-mm) nominal-thickness steel sheet.

K. Boxed End Panels: Fabricated from 0.048-inch (1.21-mm) nominal-thickness steel sheet.

L. Materials:

1. Cold-Rolled Steel Sheet: ASTM A 1008/A 1008M, Commercial Steel (CS), Type B, suitable for exposed applications.
2. Metallic-Coated Steel Sheet: ASTM A 653/A 653M, Commercial Steel (CS), Type B; with A60 (ZF180) zinc-iron, alloy (galvannealed) coating designation.

M. Finish: Baked enamel or powder coat.

1. Color: As selected by Architect from manufacturer's full range.

2.4 FABRICATION

A. Fabricate metal lockers square, rigid, without warp, and with metal faces flat and free of dents or distortion. Make exposed metal edges safe to touch and free of sharp edges and burrs.

1. Form body panels, doors, shelves, and accessories from one-piece steel sheet unless otherwise indicated.
2. Provide fasteners, filler plates, supports, clips, and closures as required for complete installation.

B. Fabricate each metal locker with an individual door and frame; individual top, bottom, and back; and common intermediate uprights separating compartments.

C. Equipment: Provide each locker with an identification plate and the following equipment:

1. Double-Tier Units: One double-prong ceiling hook and two single-prong wall hooks.

D. Welded Construction: Factory preassemble metal lockers by welding all joints, seams, and connections; with no bolts, nuts, screws, or rivets used in assembly of main locker groups. Factory weld main locker groups into one-piece structures. Grind exposed welds smooth and flush.

E. Accessible Lockers: Fabricate as follows:

1. Locate bottom shelf no lower than 15 inches (381 mm) above the floor.
2. Where hooks, coat rods, or additional shelves are provided, locate no higher than 48 inches (1219 mm) above the floor.

F. Continuous Zee Base: Fabricated in lengths as long as practical to enclose base and base ends; finished to match lockers.

G. Continuous Sloping Tops: Fabricated in lengths as long as practical, without visible fasteners at splice locations; finished to match lockers.

1. Sloping-top corner fillers, mitered.

H. Recess Trim: Fabricated with minimum 2-1/2-inch (64-mm) face width and in lengths as long as practical; finished to match lockers.

I. Filler Panels: Fabricated in an unequal leg angle shape; finished to match lockers. Provide slip-joint filler angle formed to receive filler panel.

J. Boxed End Panels: Fabricated with 1-inch- (25-mm-) wide edge dimension, and designed for concealing fasteners and holes at exposed ends of nonrecessed metal lockers; finished to match lockers.

1. Provide one-piece panels for double-row (back-to-back) locker ends.

K. Center Dividers: Full-depth, vertical partitions between bottom and shelf; finished to match lockers.

2.5 ACCESSORIES

A. Fasteners: Zinc- or nickel-plated steel, slotless-type, exposed bolt heads; with self-locking nuts or lock washers for nuts on moving parts.

B. Anchors: Material, type, and size required for secure anchorage to each substrate.

1. Provide nonferrous-metal or hot-dip galvanized anchors and inserts on inside face of exterior walls for corrosion resistance.
2. Provide toothed-steel or lead expansion sleeves for drilled-in-place anchors.

PART 3 - EXECUTION

3.1 EXAMINATION

A. Examine walls and floors or support bases, with Installer present, for compliance with requirements for installation tolerances and other conditions affecting performance of the Work.

B. Prepare written report, endorsed by Installer, listing conditions detrimental to performance of the Work.

C. Proceed with installation only after unsatisfactory conditions have been corrected.

3.2 INSTALLATION

A. Install lockers level, plumb, and true; shim as required, using concealed shims.

1. Anchor locker runs at ends and at intervals recommended by manufacturer, but not more than 36 inches (910 mm) o.c. Using concealed fasteners, install anchors through backup reinforcing plates, channels, or blocking as required to prevent metal distortion.
2. Anchor single rows of metal lockers to walls near top and bottom of lockers and to floor.
3. Anchor back-to-back metal lockers to floor.

B. Welded Lockers: Connect groups together with manufacturer's standard fasteners, with no exposed fasteners on face frames.

C. Equipment:

1. Attach hooks with at least two fasteners.
2. Attach door locks on doors using security-type fasteners.
3. Identification Plates: Identify metal lockers with identification indicated on Drawings.

a. Attach plates to each locker door, near top, centered, with at least two aluminum rivets.
b. Attach plates to upper shelf of each open-front metal locker, centered, with a least two aluminum rivets.

D. Trim: Fit exposed connections of trim, fillers, and closures accurately together to form tight, hairline joints, with concealed fasteners and splice plates.

1. Attach recess trim to recessed metal lockers with concealed clips.

2. Attach filler panels with concealed fasteners. Locate filler panels where indicated on Drawings.
3. Attach sloping-top units to metal lockers, with closures at exposed ends.
4. Attach boxed end panels using concealed fasteners to conceal exposed ends of nonrecessed metal lockers.

3.3 ADJUSTING

A. Clean, lubricate, and adjust hardware. Adjust doors and latches to operate easily without binding. Verify that integral locking devices operate properly.

3.4 PROTECTION

A. Protect metal lockers from damage, abuse, dust, dirt, stain, or paint. Do not permit use during construction.

B. Touch up marred finishes, or replace metal lockers that cannot be restored to factory-finished appearance. Use only materials and procedures recommended or furnished by locker manufacturer.

3.5 METAL LOCKER SCHEDULE

A. ML-1: 18 inches wide by 12 inches deep by 72 inches high, double tier.

END OF SECTION 105113

SECTION 105613 - METAL STORAGE SHELVING

PART 1 - GENERAL

1.1 RELATED DOCUMENTS

A. Drawings and general provisions of the Contract, including General and Supplementary Conditions and Division 01 Specification Sections, apply to this Section.

1.2 SUMMARY

A. Section Includes:

1. Four-post metal storage shelving.

B. Related Requirements:

1. Section 114000 "Foodservice Equipment" for metal shelving in kitchen, pantry, and refrigerated spaces.

1.3 COORDINATION

A. Coordinate sizes and locations of blocking and backing required for installation of metal storage shelving attached to wall and ceiling assemblies.

B. Coordinate locations and installation of metal storage shelving that may interfere with ceiling systems including lighting, HVAC, speakers, sprinklers, access panels, electrical switches or outlets, and floor drains.

1.4 ACTION SUBMITTALS

A. Product Data: For each type of product.

1. Include rated capacities, construction details, material descriptions, dimensions of individual components and profiles, and finishes for metal storage shelving.

B. Shop Drawings: For metal storage shelving.

1. Include plans, elevations, sections, and attachment details.
2. Include installation details of connectors, lateral bracing, and special bracing.

C. Samples: For each type of metal storage shelving and for each color specified, in the following sizes:

1. Vertical Supports: 12 inches (305 mm) tall.
2. Shelves: Full size, but not more than 24 inches wide by 12 inches deep (610 mm wide by 305 mm deep).
3. Connectors: Full size.
4. Shelf-Label Holders: Full size.

D. Product Schedule: For metal storage shelving. Use same designations indicated on Drawings.

1.5 CLOSEOUT SUBMITTALS

A. Maintenance Data: For metal storage shelving to include in maintenance manuals.

1.6 MAINTENANCE MATERIAL SUBMITTALS

A. Furnish extra materials that match products installed and that are packaged with protective covering for storage and identified with labels describing contents.

1. Shelves: Full-size units equal to 5 percent of amount installed for each type indicated, but no fewer than 5 shelves.
2. Shelf-to-Post Connectors: Full-size units equal to 5 percent of amount installed for each type indicated, but no fewer than 10 connectors.
3. Shelf-Label Holders: Full-size units equal to 5 percent of amount installed for each type indicated, but no fewer than 10 holders.

1.7 QUALITY ASSURANCE

A. Installer Qualifications: An authorized representative who is trained and approved by manufacturer.

1.8 FIELD CONDITIONS

A. Environmental Limitations: Do not deliver or install metal storage shelving until spaces are enclosed and weathertight, wet work in spaces is complete and dry, and temporary HVAC system is operating and maintaining ambient temperature and humidity conditions at levels intended for building occupants during the remainder of the construction period.

PART 2 - PRODUCTS

2.1 PERFORMANCE REQUIREMENTS

A. Structural Performance for Four-Post Metal Storage Shelving: Capable of withstanding the loads indicated according to MH 28.1.

2.2 FOUR-POST METAL STORAGE SHELVING (**MS-#**)

A. Open Four-Post Metal Storage Shelving: Complying with MH 28.1 and field assembled from factory-formed components. Shelves span between supporting corner posts that allow shelf-height adjustment over full height of shelving unit. Provide fixed top and bottom shelves, adjustable intermediate shelves, and accessories indicated.

1. Products: Subject to compliance with requirements, provide one of the following:

a. Borroughs Corporation; Box Edge Plus.
b. EQUIPTO; Iron Grip.
c. Penco Products, Inc; Clipper Industrial Shelving.

d. Republic Storage Systems, LLC; Rivet Wedge-Lock.
e. Safco Products; Boltless Shelving.
f. Tennsco; Q-Line.

2. Load-Carrying Capacity per Shelf: 400 lb (181 kg).
3. Posts: Fabricated from hot-rolled steel; in manufacturer's standard shape; with perforations at 1-1/2 inches (38 mm) o.c. to receive shelf-to-post connectors.

   a. Unit Configuration: Configure shelving units as starter- and add-on unit assemblies.

      1) Add-On Shelf Posts: Fabricated from hot-rolled steel, manufacturer's standard shape; perforated to match main posts.

   b. Post Base: Bolt leveler.

4. Bracing: Manufacturer's standard, single or double diagonal cross bracing.

   a. Location: At unit back and ends as required for stability, load-carrying capacity of shelves, and number of shelves indicated.

5. Solid-Type Shelves:

   a. Steel Sheet: Nominal thickness 0.036 inch (0.91 mm) minimum, as required for load-carrying capacity per shelf.
   b. Fabricate fronts and backs of shelves with box-formed edges, with corners lapped and welded.
   c. Fabricate fronts and backs of shelves with vertical edges that are flanged and returned, with edges reinforced with steel bars or channels.

6. Shelf Quantity: Three shelves per shelving unit in addition to top and bottom shelf.
7. Shelf-to-Post Connectors: Manufacturer's standard connectors.
8. Base: Open, with exposed post legs.
9. Overall Unit Width and Depth:

   a. MS-1: 48 inches (1219 mm) wide by 24 inches (610 mm) deep.
   b. MS-2: 36 inches (914 mm) wide by 24 inches (610 mm) deep.

10. Overall Unit Height: 84 inches (2134 mm).
11. Accessories:

    a. Shelf-Label Holders: Clear plastic, designed to clip onto front edge of shelf.

12. Steel Finish: Baked enamel or powder coat.

    a. Color and Gloss: As selected by Architect from manufacturer's full range.

2.3 ANCHORS

A. Floor Anchors: Galvanized-steel, post-installed expansion anchors, power-actuated fasteners, or threaded concrete screws. Provide number per unit recommended by manufacturer unless additional anchors are indicated in calculations.

B. Wall Anchors: Manufacturer's standard, galvanized-steel anchors designed to secure metal storage shelving to adjacent wall. Provide one per shelving unit for each shelving unit adjacent to a wall unless additional anchors are indicated in calculations.

2.4 FABRICATION

A. Fabricate metal storage shelving components to provide field-assembled units that are square and rigid, with posts plumb and true and shelves flat and free of dents or distortion. Fabricate connections to form a rigid structure, free of buckling and warping.

1. Form exposed connections with hairline joints, flush and smooth, using concealed fasteners where possible. Locate joints where least conspicuous.
2. Build in straps, plates, brackets, and other reinforcements as needed to support shelf loading.
3. Cut, reinforce, drill, and tap metal fabrications to receive hardware, fasteners, and similar items.

B. Form metal in maximum lengths to minimize joints. Form bent-metal corners to smallest radius possible without causing grain separation or otherwise impairing the Work.

C. Form edges and corners free of sharp edges or rough areas. Fold back and crimp exposed edges of unsupported sheet metal to form a hem on the concealed side; ease edges of metal plate to radius of approximately 1/32 inch (0.8 mm). Shear and punch metals cleanly and accurately. Remove burrs.

D. Weld corners and seams continuously to develop strength, minimize distortion, and maintain the corrosion resistance of base metals. At exposed locations, finish welds and surfaces smooth and blended so surface is smooth after finishing and contour of welded surface matches that of adjacent surface. Weld before finishing components to greatest extent possible. Remove weld spatter and welding oxides from exposed surfaces before finishing.

PART 3 - EXECUTION

3.1 EXAMINATION

A. Examine areas, with Installer present, for compliance with requirements for installation tolerances and other conditions affecting performance of the Work.

B. Examine floors for suitable conditions where metal storage shelving will be installed.

C. Examine walls to which metal storage shelving will be attached for properly located blocking, grounds, or other solid backing for attachment of support fasteners.

D. Proceed with installation only after unsatisfactory conditions have been corrected.

3.2 PREPARATION

A. Vacuum and clean finished floor over which metal storage shelving is to be installed.

3.3 INSTALLATION

A. Install metal storage shelving level, plumb, square, rigid, true, and with shelves flat and free of dents or distortion. Make connections to form a rigid structure, free of buckling and warping.

1. Install exposed connections with hairline joints, flush and smooth, using concealed fasteners where possible.
2. Install braces, straps, plates, brackets, and other reinforcements as needed to support shelf loading and as required for stability.
3. Adjust post-base bolt leveler to achieve level and plumb installation.
4. Anchor shelving units to floor with floor anchors through floor plate. Shim floor plate to achieve level and plumb installation.
5. Connect side-to-side and back-to-back shelving units together.
6. Install shelves in each shelving unit at spacing indicated on Drawings.

    a. Four-Post Metal Storage Shelving: Install four clips, one at each post, for support of each shelf; with clips fully engaged in post perforations.

B. Accessories:

1. Shelf-Label Holders: Install one on each shelf.

    a. Install centered within each shelving unit.

3.4 ERECTION TOLERANCES

A. Erect four-post metal storage shelving to a maximum tolerance from vertical of 1/2 inch (13 mm) in up to 10 feet (3 m) of height, not exceeding 1 inch (25 mm) for heights taller than 10 feet (3 m).

3.5 ADJUSTING

A. Adjust metal storage shelving so that connectors and other components engage accurately and securely.

B. Adjust and lubricate operable components to operate smoothly and easily, without binding or warping. Check and re-adjust operating hardware.

C. Touch up marred finishes or replace metal storage shelving that cannot be restored to factory-finished appearance. Use only materials and procedures recommended or furnished by metal storage shelving manufacturer.

D. Replace metal storage shelving components that have been damaged beyond successful repair by finish touchup or similar minor repair procedures.

END OF SECTION 105613

SECTION 107316.13 – METAL CANOPIES

PART 1 - GENERAL

1.1 RELATED DOCUMENTS

A. Drawings and general provisions of the Contract, including General and Supplementary Conditions and Division 01 Specification Sections, apply to this Section.

1.2 SUMMARY

A. Section Includes:

1. Metal hanger-rod canopies.

B. Related Sections:

1. Section 076200 "Sheet Metal Flashing and Trim."
2. Section 079200 "Joint Sealants."
3. Section 133419 "Metal Building Systems" for wall system on which metal canopies are installed.

1.3 ACTION SUBMITTALS

A. Product Data: For each type of product.

1. Include styles, material descriptions, construction details, fabrication details, dimensions of individual components and profiles, hardware, fittings, mounting accessories, and finishes for metal canopies.

B. Shop Drawings:

1. Include plans, elevations, sections, mounting heights, and attachment details.
2. Detail fabrication and assembly of metal canopies.
3. Show locations for blocking, reinforcement, and supplementary structural support.

C. Delegated Design Submittal: Submit design calculations signed and sealed by a Professional Engineer. Design calculations shall state that the metal canopy design complies with the wind requirements of ANSI/ASCE 7, the stability criteria of applicable building code, and all other governing criteria.

D. Samples for Initial Selection: For each type of exposed finish.

E. Samples for Verification: For each type of exposed finish, 2-inch- (50-mm-) square section.

1.4 INFORMATIONAL SUBMITTALS

A. Welding certificates.

B. Sample Warranty: For special warranty.

1.5 CLOSEOUT SUBMITTALS

A. Operation and Maintenance Data: For metal canopies to include in operation and maintenance manuals.

1.6 QUALITY ASSURANCE

A. Manufacturer Qualifications: At least ten years experience in the design, fabrication, and erection of extruded aluminum walkway cover systems.

B. Installer Qualifications: Have walkway covers installed by manufacturer, third party installation is not acceptable.

C. Welding Qualifications: Qualify procedures and personnel according to the following:

1. AWS D1.2/D1.2M, "Structural Welding Code - Aluminum."

PART 2 - PRODUCTS

2.1 PERFORMANCE REQUIREMENTS

A. General Performance: Work shall withstand exposure to weather and resist thermally induced movement without failure, rattling, leaking, or fastener disengagement due to defective manufacture, fabrication, installation, or other defects in construction.

B. Structural Performance: Metal canopies shall be designed to resist loads indicated on Drawing S201 and the following:

1. Design metal canopies in accordance with The Aluminum Design Manual 2000.
2. Comply with the wind requirements of ASCE 7.
3. Provide an all-welded extruded aluminum system complete with internal drainage.
4. Non-welded systems are not acceptable.

C. Thermal Movements: Allow for thermal movements from ambient and surface temperature changes.

1. Temperature Change: 120 deg F (67 deg C), ambient; 180 deg F (100 deg C), material surfaces.

2.2 MANUFACTURERS

A. Basis-of-Design Manufacturer: Provide products fabricated by Peachtree Protective Covers, Inc., or equivalent product by one of the following:

1. Dittmer Architectural Aluminum.
2. Avadek Walkway Cover Systems.

2.3 MATERIALS

A. Aluminum Members: Extruded aluminum, ASTM B 221, 6063 alloy, T6 temper.

B. Fasteners: Aluminum, 18-8 stainless steel, or 300 series stainless steel.

C. Protective Coating for Aluminum Columns Embedded in Concrete: Clear acrylic.

D. Grout:

1. Portland Cement: ASTM C 150, Type I.
2. Sand: ASTM C 404.
3. Water: Potable.

E. Gaskets: Dry seal santoprene pressure type.

F. Aluminum Flashing: ASTM B 209, Type 3003 H14, 0.040 inch, minimum.

2.4 METAL CANOPY FABRICATION

A. General:

1. Shop Assembly: Assemble components in shop to greatest extent possible to minimize field assembly.
2. Welding: In accordance with ANSI/AWS D1.2.

B. Bent Construction: Factory assemble beams to columns to form one-piece rigid bents. Where used, make welds smooth and uniform using an inert gas shielded arc. Perform suitable edge preparation to assure 100% penetration. Grind welds only where interfering with adjoining structure to allow for flush connection. Field welding is not permitted. Rigid mechanical joints can be used if supported by engineering calculations and/or testing.

C. Deck Construction: Fabricate from extruded modules that interlock in a self-flashing manner. Positively fasten interlocking joints creating a monolithic structural unit capable of developing the full strength of the sections. The fastenings must have minimum shear strength of 350 pounds each. Assemble deck with sufficient camber to offset dead load deflection.

D. Beams: Provide open-top tubular extrusion, top edges thickened for strength and designed to receive deck members in self-flashing manner.

E. Deck: Extruded self-flashing sections interlocking into a composite unit. Provide welded plate closures at deck ends.

F. Fascia: Manufacturer’s standard shape. Provide fascia splices where continuous runs of fascia are jointed. Locate splices to be in line with bents and fasten in place on hidden or non-vertical surfaces.

G. Closure: Provide manufacturer’s standard closure between underside of deck and beam.

2.5 FINISHES

A. Comply with NAAMM's "Metal Finishes Manual for Architectural and Metal Products" for recommendations for applying and designating finishes.

B. Protect mechanical and painted finishes on exposed surfaces from damage by applying a strippable, temporary protective covering before shipping.

C. Appearance of Finished Work: Noticeable variations in same piece are unacceptable. Variations in appearance of adjoining components are acceptable if they are within the range of approved Samples and are assembled or installed to minimize contrast.

D. Aluminum Finish:

1. Clear Anodic Finish: AAMA 611, AA-M12C22A41, Class I, 0.018 mm or thicker.
2. High-Performance Organic Finish: Two-coat fluoropolymer finish complying with AAMA 2604 and containing not less than 70 percent PVDF or FEVE resin by weight in color coat. Prepare, pretreat, and apply coating to exposed metal surfaces to comply with coating and resin manufacturers' written instructions.

    a. Color and Gloss: As selected by Architect from manufacturer's full range.

PART 3 - EXECUTION

3.1 EXAMINATION

A. Examine substrates, areas, and conditions, with Installer present, to verify actual locations, dimensions, completion and cleaning of adjacent concrete, masonry, and roofing work, and other conditions affecting performance of the Work.

B. Proceed with installation only after unsatisfactory conditions have been corrected.

3.2 ERECTION

A. General: Erect metal canopies at locations and in position indicated, securely connected to supports, free of rack, true to line, level, and plumb, and in proper relation to adjacent construction. Use mounting methods of types described and in compliance with Shop Drawings and fabricator's written instructions.

B. Anchoring to In-Place Construction: Use anchors, fasteners, fittings, hardware, and installation accessories where necessary for securing metal canopies to structural support and for properly transferring load to in-place construction.

C. Corrosion Protection: Coat concealed surfaces of aluminum that come in contact with grout, concrete, masonry, wood, or dissimilar metals with a heavy coat of bituminous paint.

D. Coordinate metal canopy installation with flashing and joint-sealant installation so these materials are installed in sequence and in a manner that prevents exterior moisture from passing through completed exterior wall and roof assemblies.

3.3 ADJUSTING

A. Adjust hardware and moving parts to function smoothly, and lubricate as recommended by retractable-metal canopy manufacturer.

3.4 CLEANING AND PROTECTION

A. Clean metal canopy components promptly after erection.

B. Touch up factory-applied finishes to restore damaged or soiled areas.

END OF SECTION 107316.13

SECTION 107326.13 - METAL WALKWAY COVERS

PART 1 - GENERAL

1.1 RELATED DOCUMENTS

A. Drawings and general provisions of the Contract, including General and Supplementary Conditions and Division 01 Specification Sections, apply to this Section.

1.2 SUMMARY

A. Section Includes: Design, fabrication, and installation of welded extruded aluminum walkway cover systems.

B. Products furnished, but not installed under this section:

1. Column Sleeves (Styrofoam blockouts).
2. Anchor bolors (if required).

C. Related Requirements:

1. Section 033000 "Cast-In-Place Concrete."
2. Section 334100 "Storm Utility Drainage Piping" for unground connection of drainage.

1.3 REFERENCES

A. The Aluminum Association (AA):

1. 1. The Aluminum Design Manual 2000, Specifications & Guidelines for Aluminum Structures.

B. American Architectural Manufacturers Association (AAMA):

1. AAMA 611, Voluntary Specification for Anodized Architectural Aluminum.
2. AAMA 2603, Voluntary Specification, Performance Requirements and Test Procedures for Pigmented Organic Coatings on Aluminum Extrusions and Panels.
3. AAMA 2605, Voluntary Specification, Performance Requirements and Test Procedures for Superior Performing Organic Coatings on Aluminum Extrusions and Panels.

C. American Society of Civil Engineers (ASCE):

1. ASCE 7, Minimum Design Loads for Buildings and Other Structures.

D. D. American Society for Testing and Materials (ASTM):

1. ASTM B 209, Specification for Aluminum and Aluminum- Alloy Sheet and Plate.
2. ASTM B 221, Specification for Aluminum and Aluminum- Alloy Extruded Bars, Rods, Wire, Profiles, and Tubes.
3. ASTM C 150, Specification for Portland Cement.
4. ASTM C 404, Specification for Aggregates for Masonry Grout.

E. American Welding Society (AWS):

1. ANSI/AWS D1.2, Structural Welding Code - Aluminum.

1.4 SYSTEM DESCRIPTION

A. Design Requirements:

1. Design Walkways in accordance with The Aluminum Design Manual 2010.
2. Comply with the wind requirements of ASCE 7.
3. Provide an all welded extruded aluminum system complete with internal drainage. Non-welded systems are not acceptable.
4. Provide expansion joints to accommodate temperature changes of 120 degrees F. Provide expansion joints with no metal to metal contact.

B. Performance Requirements:

1. Grout: Compressive strength of 2000 psi, minimum.

1.5 ADMINISTRATIVE REQUIREMENTS

A. Preinstallation Conference: Conduct conference at Project site.

1. Meet with Owner, Construction Manager, Installer, manufacturer's representative, Concrete Installer, underground piping Installer, electrical Installer, and other installers whose work interfaces with or affects walkway covers.
2. Review special details, drainage, and condition of other construction that will affect Work.

1.6 ACTION SUBMITTALS

A. Product Data: For each type of product, Manufacturer’s product information, specifications, and installation instructions for walkway cover components and accessories.

B. Shop Drawings:

1. Include plans, elevations, sections, keyed details, and attachments to other work.
2. Include details for foundations and attachment of drainage piping.

C. Samples for Initial Selection: Manufacturer’s printed color chart.

D. Samples for Verification:

1. Include copings made from 12-inch (300-mm) lengths of full-size components in specified material, and including fasteners, cover joints, accessories, and attachments.

E. Delegated Design Data: Design calculations bearing the seal of a Registered Professional Engineer, licensed in the state where the project is located. Design calculations shall state that the walkway cover system design complies with the wind requirements of ASCE 7, the stability criteria of applicable building code, and all other governing criteria.

1.7 QUALITY ASSURANCE

A. Manufacturer Qualifications: At least ten years experience in the design, fabrication, and erection of extruded aluminum walkway cover systems.

B. Installer Qualifications: Have walkway covers installed by manufacturer, third party installation is not acceptable.

1.8 DELIVERY, STORAGE, AND HANDLING

A. Do not store walkway cover materials in contact with other materials that might cause staining, denting, or other surface damage. Store away from uncured concrete and masonry.

B. Protect strippable protective covering from exposure to sunlight and high humidity, except to extent necessary for the period of installation.

1.9 FIELD CONDITIONS

A. Field Measurements: Verify profiles and tolerances of substrates by field measurements before fabrication, and indicate measurements on Shop Drawings.

B. Coordination: Coordinate with construction of adjoining work to provide a leakproof and noncorrosive installation.

1.10 WARRANTY

A. Special Finish Warranty: Standard form in which manufacturer agrees to repair finishes or replace aluminum that shows evidence of deterioration of factory-applied finishes within specified warranty period.

1. Warranty Period: Five years from date of Substantial Completion.

PART 2 - PRODUCTS

2.1 PERFORMANCE REQUIREMENTS

A. General Performance: Work shall withstand exposure to weather and resist thermally induced movement without failure, rattling, leaking, or fastener disengagement due to defective manufacture, fabrication, installation, or other defects in construction.

B. Loading: As shown on Drawings.

C. Thermal Movements: Allow for thermal movements from ambient and surface temperature changes to prevent buckling, opening of joints, hole elongation, overstressing of components, failure of joint sealants, failure of connections, and other detrimental effects. Provide clips that resist rotation and avoid shear stress as a result of thermal movements. Base calculations on surface temperatures of materials due to both solar heat gain and nighttime-sky heat loss.

1. Temperature Change (Range): 120 deg F (67 deg C), ambient; 180 deg F (100 deg C), material surfaces.

2.2 MANUFACTURERS

A. Basis-of-Design Manufacturer: Provide products fabricated by Peachtree Protective Covers, Inc., or equivalent product by one of the following:

1. Dittmer Architectural Aluminum.
2. Avadek Walkway Cover Systems.

2.3 MATERIALS

A. Aluminum Members: Extruded aluminum, ASTM B 221, 6063 alloy, T6 temper.

B. Fasteners: Aluminum, 18-8 stainless steel, or 300 series stainless steel.

C. Protective Coating for Aluminum Columns Embedded in Concrete: Clear acrylic.

D. Grout:

1. Portland Cement: ASTM C 150, Type I.
2. Sand: ASTM C 404.
3. Water: Potable.

E. Gaskets: Dry seal santoprene pressure type.

F. Aluminum Flashing: ASTM B 209, Type 3003 H14, 0.040 inch, minimum.

2.4 MIXES

A. Grout: 1 part portland cement to 3 parts sand, add water to produce a pouring consistency.

2.5 FABRICATION

A. General:

1. Shop Assembly: Assemble components in shop to greatest extent possible to minimize field assembly.
2. Welding: In accordance with ANSI/AWS D1.2.
3. Bent Construction: Factory assemble beams to columns to form one-piece rigid bents. Where used make welds smooth and uniform using an inert gas shielded arc. Perform suitable edge preparation to assure 100% penetration. Grind welds only where interfering with adjoining structure to allow for flush connection. Field welding is not permitted. Rigid mechanical joints can be used if supported by engineering calculations and/or testing.
4. Deck Construction: Fabricate from extruded modules that interlock in a self-flashing manner. Positively fasten interlocking joints creating a monolithic structural unit capable of developing the full strength of the sections. The fastenings must have minimum shear strength of 350 pounds each. Assemble deck with sufficient camber to offset dead load deflection.

B. Columns: Provide radius-cornered tubular extrusions with cutout and internal diverter for drainage, where indicated. Circular downspout opening in column not acceptable.

C. Beams: Provide open-top tubular extrusion, top edges thickened for strength and designed to receive deck members in self-flashing manner.

D. Deck: Extruded self-flashing sections interlocking into a composite unit. Provide welded plate closures at deck ends.

E. Fascia: Manufacturer's standard shape. Provide fascia splices where continuous runs of fascia are jointed. Locate splices to be in line with bents and fasten in place on hidden or non-vertical surfaces.

F. Closure: Provide manufacturer's standard closure between underside of deck and beam.

2.6 FINISHES

A. Comply with NAAMM's "Metal Finishes Manual for Architectural and Metal Products" for recommendations for applying and designating finishes.

B. Protect mechanical and painted finishes on exposed surfaces from damage by applying a strippable, temporary protective covering before shipping.

C. Appearance of Finished Work: Noticeable variations in same piece are unacceptable. Variations in appearance of adjoining components are acceptable if they are within the range of approved Samples and are assembled or installed to minimize contrast.

D. Aluminum Finish:

1. Clear Anodic Finish: AAMA 611, AA-M12C22A41, Class I, 0.018 mm or thicker.

PART 3 - EXECUTION

3.1 EXAMINATION

A. Examine substrates, areas, and conditions, with Installer present, to verify actual locations, dimensions, completion and cleaning of adjacent concrete, masonry, and roofing work, and other conditions affecting performance of the Work.

B. Proceed with installation only after unsatisfactory conditions have been corrected.

3.2 ERECTION

A. Erect protective cover true to line, level, and plumb.

B. Protect aluminum columns embedded in concrete with clear acrylic.

C. Fill downspout columns with grout to the discharge level to prevent standing water where indicated on Drawings to spill to grade. Unless otherwise indicated, connect to underground piping.

D. Install weep holes at top of concrete in non-draining columns to remove condensation.

E. Provide hairline miters and fitted joints.

3.3 CLEANING AND PROTECTION

A. Clean all protective cover components promptly after installation.

B. Protect materials during and after installation.

END OF SECTION 107326.13

SECTION 107516 - GROUND-SET FLAGPOLES

PART 1 - GENERAL

1.1 RELATED DOCUMENTS

A. Drawings and general provisions of the Contract, including General and Supplementary Conditions and Division 01 Specification Sections, apply to this Section.

1.2 SUMMARY

A. Section includes ground-set flagpoles made from aluminum.

B. Owner-Furnished Material: Flags.

1.3 ACTION SUBMITTALS

A. Product Data: For each type of product.

1. Include construction details, material descriptions, dimensions of individual components and profiles, operating characteristics, fittings, accessories, and finishes for flagpoles.

B. Shop Drawings: For flagpoles.

1. Include plans, elevations, and attachment details. Show general arrangement, jointing, fittings, accessories, grounding, anchoring, and support.
2. Include section, and details of foundation system.

C. Samples for Verification: For each type of exposed finish, in manufacturer's standard sizes.

1.4 CLOSEOUT SUBMITTALS

A. Operation and Maintenance Data: For flagpoles to include in operation and maintenance manuals.

1.5 DELIVERY, STORAGE, AND HANDLING

A. Spiral wrap flagpoles with heavy paper and enclose in a hard fiber tube or other protective container.

PART 2 - PRODUCTS

2.1 MANUFACTURERS

A. Source Limitations: Obtain flagpoles as complete units, including fittings, accessories, bases, and anchorage devices, from single source from single manufacturer.

2.2 PERFORMANCE REQUIREMENTS

A. Structural Performance: Flagpole assemblies, including anchorages and supports, shall withstand design loads indicated within limits and under conditions indicated.

1. Wind Loads: Determine according to NAAMM FP 1001. Basic wind speed for Project location is indicated on Drawings.
2. Base flagpole design on polyester flags of maximum standard size suitable for use with flagpole or flag size indicated, whichever is more stringent.

2.3 ALUMINUM FLAGPOLES

A. Aluminum Flagpoles: Cone-tapered flagpoles fabricated from seamless extruded tubing complying with ASTM B 241/B 241M, Alloy 6063, with a minimum wall thickness of 3/16 inch (4.8 mm).

1. Manufacturers: Subject to compliance with requirements, provide products by one of the following:

a. American Flagpole.
b. Concord Industries, Inc.
c. Eder Flag Manufacturing Company, Inc.
d. Ewing Flagpoles.
e. Morgan-Francis Flagpoles and Accessories.
f. Pole-Tech Company Inc.

B. Exposed Height: 30 feet (9 m) and 35 feet (11 m).

C. Construct flagpoles in one piece if possible. If more than one piece is necessary, comply with the following:

1. Fabricate shop and field joints without using fasteners, screw collars, or lead calking.
2. Provide flush hairline joints using self-aligning, snug-fitting, internal sleeves.

D. Metal Foundation Tube: Manufacturer's standard corrugated-steel foundation tube, 0.060-inch (1.52-mm) wall thickness with 3/16-inch (4.8-mm) steel bottom plate and support plate; 3/4-inch- (19-mm-) diameter, steel ground spike; and steel centering wedges welded together. Galvanize foundation tube after assembly. Furnish loose hardwood wedges at top of foundation tube for plumbing pole.

1. Flashing Collar: Same material and finish as flagpole.

2.4 FITTINGS

A. Finial Ball: Flush-seam ball, sized as indicated or, if not indicated, to match flagpole-butt diameter.

1. 0.063-inch (1.6-mm) spun aluminum with gold anodic finish.

B. Finial Eagle: Sized as standard with manufacturer for flagpole size indicated.

1. Cast aluminum with gold anodic finish.

C. Internal Halyard, Winch System: Manually operated winch with control stop device and removable handle, stainless-steel cable halyard, and concealed revolving truck assembly with plastic-coated

counterweight and sling. Furnish flush access door secured with cylinder lock. Finish truck assembly to match flagpole.

1. Halyard Flag Snaps: Chromium-plated bronze swivel snap hooks. Furnish two per halyard.
2. Rig flag poles for the following size flags:

    a. 30’ pole: 3’ x 5’ storm flag and 4’ x 6’ flag.
    b. 35’ pole: 3’ x 5’ storm flag and 4’ x 6’ and 5’ x 8’ flags.

2.5 MISCELLANEOUS MATERIALS

A. Sand: ASTM C 33/C 33M, fine aggregate.

B. Elastomeric Joint Sealant: Multicomponent nonsag urethane or single-component neutral-curing silicone joint sealant complying with requirements in Section 079200 "Joint Sealants."

C. Bituminous Paint: Cold-applied asphalt emulsion complying with ASTM D 1187/D 1187M.

2.6 ALUMINUM FINISHES

A. Natural Satin Finish: AA-M32, fine, directional, medium satin polish; buff complying with AA-M20; seal aluminum surfaces with clear, hard-coat wax.

B. Clear Anodic Finish: AAMA 611, AA-M12C22A41.

C. Gold Anodic Finish: AAMA 611, AA-M32C22A43; gold color.

PART 3 - EXECUTION

3.1 PREPARATION

A. Prepare uncoated metal flagpoles that are set in foundation tubes by painting below-grade portions with a heavy coat of bituminous paint.

B. Foundation Excavation: Excavate to neat clean lines in undisturbed soil. Remove loose soil and foreign matter from excavation and moisten earth before placing concrete. Place and compact drainage material at excavation bottom.

C. Provide forms where required due to unstable soil conditions and for perimeter of flagpole base at grade. Secure and brace forms to prevent displacement during concreting.

D. Foundation Tube: Place foundation tube, center, and brace to prevent displacement during concreting. Place concrete. Plumb and level foundation tube and allow concrete to cure.

E. Place concrete, as specified in Section 033000 "Cast-in-Place Concrete." Compact concrete in place by using vibrators. Moist-cure exposed concrete for no fewer than seven days or use nonstaining curing compound.

F. Trowel exposed concrete surfaces to a smooth, dense finish, free of trowel marks, and uniform in texture and appearance. Provide positive slope for water runoff to perimeter of concrete base.

3.2 FLAGPOLE INSTALLATION

A. General: Install flagpoles where indicated and according to Shop Drawings and manufacturer's written instructions.

B. Foundation Tube: Place flagpole in tube, seated on bottom plate between steel centering wedges, and install hardwood wedges to secure flagpole in place. Place and compact sand in foundation tube and remove hardwood wedges. Seal top of foundation tube with a 2-inch (50-mm) layer of elastomeric joint sealant and cover with flashing collar.

END OF SECTION 107516

SECTION 123211 – OFFICE EQUIPMENT

PART 1 - GENERAL

1.1 RELATED DOCUMENTS

A. Drawings and general provisions of the Contract, including General and Supplementary Conditions and Division 01 Specification Sections, apply to this Section.

1.2 SUMMARY

A. Section includes:

1. Literature Racks.

1.3 SUBMITTALS

A. Product Data: Submit applicable reference standards, performance data, and application recommendations and limitations.

B. Shop Drawings: Submit design and installation drawings showing product components in assembly with adjacent materials and products.

C. Quality Control Submittals:

1. Manufacturer's installation instructions.

D. Contract Closeout Submittals:

1. Warranty.

1.4 DELIVERY, STORAGE AND HANDLING

A. Pack and ship to avoid damage according to manufacturer's recommendations:

1. Finish and assemble components in factory before shipment.
2. Ship components in individual, sealed, labeled cartons.
3. Deliver components to room designated for installation.

B. Do not accept or install damaged products at the site.

C. Store products in heated indoor storage near point of installation. retain protective packaging until installing.

1.5 PROJECT CONDITIONS

A. Environmental Requirements: Do not install until all mortar, wet and dust producing work is completed.

B. Field Measurements: Obtain required field measurements from the Contractor and indicate on Shop Drawings.

PART 2 - PRODUCTS

2.1 MANUFACTURERS

A. In other Part 2 articles where titles below introduce lists, the following requirements apply to product selection:

1. Basis-of-Design Product: The design for each item is based on the product named. Subject to compliance with requirements, provide either the named product or a comparable product by one of the other manufacturers specified.

2.2 LITERATURE RACK (LR-1)

A. Product: Subject to compliance with requirements, available products that may be incorporated into the work include, but are not limited to the following:

1. Basis-of-Design: Displays2Go; BRWM4XPBK wall rack.

B. Aluminum frame with matte black finish.

C. Four adjustable, clear acrylic pockets with removable pocket dividers designed to hold 8-1/2”x11” and 4”x9” literature.

D. Wall-mounted.

E. Overall Size: 19-1/2”w x 5”d x 55”h.

PART 3 - EXECUTION

3.1 INSTALLATION

A. Installation in accordance with manufacturer's instructions.

3.2 ADJUSTING

A. Adjust all hardware for smooth operation.

3.3 CLEANING

A. Remove all packaging materials and construction debris.

END OF SECTION 112800

SECTION 113013 - RESIDENTIAL APPLIANCES

PART 1 - GENERAL

1.1 RELATED DOCUMENTS

A. Drawings and general provisions of the Contract, including General and Supplementary Conditions and Division 01 Specification Sections, apply to this Section.

1.2 SUMMARY

A. Section Includes:

1. Refrigeration appliances.
2. Cleaning appliances.

1.3 ACTION SUBMITTALS

A. Product Data: For each type of product.

1. Include installation details, material descriptions, dimensions of individual components, and finishes for each appliance.
2. Include rated capacities, operating characteristics, electrical characteristics, and furnished accessories.

1.4 INFORMATIONAL SUBMITTALS

A. Product Certificates: For each type of appliance.

B. Field quality-control reports.

1.5 CLOSEOUT SUBMITTALS

A. Operation and Maintenance Data: For each residential appliance to include in operation and maintenance manuals.

1.6 WARRANTY

A. Special Warranties: Manufacturer agrees to repair or replace residential appliances or components that fail in materials or workmanship within specified warranty period, except as qualified below:

1. Warranty Period: Two years from date of Substantial Completion.

B. Refrigerator/Freezer, Sealed System: Limited warranty, including parts and labor for first year and parts thereafter, for on-site service on the product.

1. Warranty Period for Sealed Refrigeration System: Five years from date of Substantial Completion.
2. Warranty Period for Other Components: Two years from date of Substantial Completion.

C. Clothes Washer: Limited warranty, including parts and labor for first year and parts thereafter, for on-site service on the product.

1. Warranty Period: Two years from date of Substantial Completion.

PART 2 - PRODUCTS

2.1 MANUFACTURERS

A. Source Limitations: Obtain residential appliances from single source and each type of residential appliance from single manufacturer.

2.2 PERFORMANCE REQUIREMENTS

A. Electrical Appliances: Listed and labeled as defined in NFPA 70, by a qualified testing agency, and marked for intended location and application.

B. Accessibility: Where residential appliances are indicated to comply with accessibility requirements, comply with applicable provisions in the DOJ's 2010 ADA Standards for Accessible Design and ICC A117.1.

2.3 REFRIGERATOR/FREEZERS

A. Refrigerator/Freezer (**REFR-1**): Two-door refrigerator/freezer with freezer on top and complying with AHAM HRF-1.

1. Basis-of-Design Product: Subject to compliance with requirements, provide Electrolux Home Products (Frigidaire); FFHI1832TS or a comparable product by one of the following:

   a. General Electric Company (GE Appliances).
   b. KitchenAid; a division of Whirlpool Corporation.
   c. Sears Brands LLC (Kenmore).
   d. Whirlpool Corporation.

2. Type: Freestanding.
3. Dimensions:

   a. Width: 30 inches (762 mm).
   b. Depth: 31-3/4 inches (806 mm).
   c. Height: 70 inches (1778 mm).

4. Storage Capacity:

   a. Refrigeration Compartment Volume: 14.1 cu. ft.
   b. Freezer Volume: 3.9 cu. ft.
   c. Shelf Area: Three adjustable glass shelves, 16.3 sq. ft.

5. General Features:

    a. Separate temperature controls for each compartment.

6. Refrigerator Features:

    a. Interior light in refrigeration compartment.
    b. Compartment Storage: two vegetable crispers and one half-width meat compartment.
    c. Door Storage: Modular compartments capable of holding gallon-sized containers.
    d. Glass shelves with raised edges to contain spills.

7. Freezer Features: One freezer compartment.

    a. Automatic defrost.
    b. Interior light in freezer compartment.
    c. Full-width wire shelf.
    d. Automatic icemaker and storage bin.

8. ENERGY STAR: Provide appliances that qualify for the EPA/DOE ENERGY STAR product-labeling program.
9. Appliance Color/Finish: Stainless steel.

B. Refrigerator (**REFR-2**): Under-counter refrigerator, by Owner (not in contract).

2.4 CLOTHES WASHERS AND DRYERS

A. Clothes Washer (**CW-1**): Complying with AHAM HLW-1.

1. Basis-of-Design Product: Subject to compliance with requirements, provide Electrolux Home Products (Frigidaire); FFFW5000QW or a comparable product by one of the following:

    a. General Electric Company (GE).
    b. KitchenAid; a division of Whirlpool Corporation.
    c. Sears Brands, LLC (Kenmore).
    d. Whirlpool Corporation.

2. Type: Stacking, front-loading unit.
3. Dimensions:

    a. Width: 27 inches (686 mm).
    b. Depth: 31 inches (787 mm).
    c. Height: 36 inches (914 mm).

4. Drum: Perforated stainless steel.

    a. Capacity: 3.8 cu. ft. (0.11 cu. m).

5. Controls: Rotary-dial controls for water-fill levels, wash/rinse water temperatures, and variable-speed and fabric selectors.

    a. Wash Cycles: Four wash cycles, including regular, delicate, and permanent press.
    b. Wash Temperatures: Four settings.

6. Electrical Power: 120 V, 60 Hz, 1 phase, 15 A.

7. Motor: Manufacturer's standard with built-in overload protector.
8. Features:

    a. Self-cleaning lint filter.
    b. Unbalanced-load compensator.
    c. Inlet Hoses: Minimum length 60 inches (1525 mm).
    d. Drain Hoses: Minimum length 48 inches (1220 mm).
    e. Self-leveling legs.
    f. Automatic dispenser for bleach, fabric softener, and detergent.
    g. Spin-cycle safety switch.
    h. End-of-cycle signal.
    i. Delay-wash option.
    j. Electronic temperature control.
    k. Water levels automatically set.
    l. Timewise® Technology, to match wash and dry times.
    m. Designed to stack with approved clothes dryer.

9. ENERGY STAR: Provide appliances that qualify for the EPA/DOE ENERGY STAR product-labeling program.
10. Water-Efficient Clothes Washer: Provide clothes washer with modified energy factor greater than or equal to 2.0 and water factor less than 5.5.
11. Appliance Finish: Enamel.

    a. Color: White.

12. Front-Panel Finish: Manufacturer's standard.

B. Clothes Dryer (**CD-1**) Complying with AHAM HLD-1.

1. Basis-of-Design Product: Subject to compliance with requirements, provide Electrolux Home Products (Frigidaire); FFQE5000QW or a comparable product by one of the following:

    a. General Electric Company (GE).
    b. KitchenAid; a division of Whirlpool Corporation.
    c. Sears Brands, LLC (Kenmore).
    d. Whirlpool Corporation.

2. Type: Stacking, frontloading, electric unit.
3. Dimensions:

    a. Width: 27 inches (686 mm).
    b. Depth: 31 inches (787 mm).
    c. Height: 36 inches (914 mm).

4. Drum: Perforated porcelain-enameled steel.

    a. Capacity: 7.0 cu. ft. (0.20 cu. m).

5. Controls: Rotary-dial controls for drying cycle, temperatures, and fabric selectors.
6. Electric-Dryer Power: 240 V, 60 Hz, 1 phase, 30 A.
7. Features:

    a. Removable lint filter.
    b. Electronic temperature and moisture-level-sensor controls.
    c. End-of-cycle signal.

d. Self-leveling legs.
e. Antibacterial cycle.
f. Auxiliary drying rack.
g. Stacking kit to stack dryer over washer.
h. Cord: 6-feet long, NEMA 14-30P.
i. Designed to stack with approved clothes washer.

8. Appliance Finish: Enamel.

a. Color: White.

9. Front-Panel Finish: Manufacturer's standard.

2.5 GENERAL FINISH REQUIREMENTS

A. Protect mechanical finishes on exposed surfaces from damage by applying a strippable, temporary protective covering before shipping.

B. Appearance of Finished Work: Noticeable variations in same piece are not acceptable. Variations in appearance of adjoining components are acceptable if they are within the range of approved Samples and are assembled or installed to minimize contrast.

PART 3 - EXECUTION

3.1 EXAMINATION

A. Examine substrates, areas, and conditions, with Installer present, for compliance with requirements for installation tolerances, power connections, and other conditions affecting installation and performance of residential appliances.

B. Examine roughing-in for piping systems to verify actual locations of piping connections before appliance installation.

C. Prepare written report, endorsed by Installer, listing conditions detrimental to performance of the Work.

D. Proceed with installation only after unsatisfactory conditions have been corrected.

3.2 INSTALLATION

A. Install appliances according to manufacturer's written instructions.

B. Built-in Equipment: Securely anchor units to supporting cabinets or countertops with concealed fasteners. Verify that clearances are adequate for proper functioning and that rough openings are completely concealed.

C. Freestanding Equipment: Place units in final locations after finishes have been completed in each area. Verify that clearances are adequate to properly operate equipment.

3.3 FIELD QUALITY CONTROL

A. Perform the following tests and inspections:

1. Perform visual, mechanical, and electrical inspection and testing for each appliance according to manufacturers' written recommendations. Certify compliance with each manufacturer's appliance-performance parameters.
2. Leak Test: After installation, test for leaks. Repair leaks and retest until no leaks exist.
3. Operational Test: After installation, start units to confirm proper operation.
4. Test and adjust controls and safeties. Replace damaged and malfunctioning controls and components.

B. An appliance will be considered defective if it does not pass tests and inspections.

C. Prepare test and inspection reports.

END OF SECTION 113013

SECTION 114000 – FOODSERVICE EQUIPMENT

PART 1 - GENERAL

1.1 DESCRIPTION

A. Scope: Furnish all labor, materials, services, equipment and appliances required to provide and deliver all foodservice equipment hereinafter specified into the building, uncrate, assemble, hang, set-in-place, level, and completely install, exclusive of final utility connections.

B. Related Work Specified Elsewhere:

1. All plumbing, electrical and ventilating work required in conjunction with commercial foodservice equipment including rough-in to points indicated on mechanical drawings, and final connections from rough-in points, electrical service to points of connection and final connections shall be by Divisions 22, 23 and 26.
2. Refrigeration work will be done by the Kitchen Equipment Contractor except for electrical connections to and between compressors, blower coils, controls, etc. These final connections shall be by Divisions 22 and 26.
3. All traps, steam traps, grease traps, line strainers, tail pieces, valves, mixing valves, backflow preventers, stops, shut-offs, and fittings necessary for equipment specified will be furnished and installed under mechanical contract by Division 22 unless specifically called for otherwise under each item.
4. All line and disconnect switches, safety cut-offs and fittings, convenience boxes or other electrical controls, fittings and connections will be furnished and installed under electrical contract by Division 26, unless specifically indicated otherwise in the item specifications. Starting switches for certain specified pieces of foodservice equipment are to be provided by Kitchen Equipment Contractor. Those starting switches, if furnished loose as standard by Foodservice Manufacturers (other than fabricated items), shall be mounted and wired complete under Division 26.
5. Any sleeves or conduit required for refrigeration, syrup tubing, or carbonation tubing will be furnished and installed under Division 22.
6. Unless specifically called for in the Item Specifications, ventilating fans and all duct work between same and ceiling rough-in openings, and from same to discharge opening in building will be furnished and installed by Division 22.

1.2 DEFINITIONS

A. All references to the terms "Contractor", "Kitchen Equipment Contractor", or "K.E.C." in the specifications and/or on the drawings shall be defined to mean the Kitchen Equipment Contractor.

B. All references to the term "Owner" in the specifications and/or on the drawings shall be defined to mean the Owner or Owner's designated representative and the Foodservice Equipment Consultant.

C. All references to the term "Consultant" or "Foodservice Equipment Consultant" in the specifications and/or on the drawings shall be defined to mean **NYIKOS ASSOCIATES, INC.**

its employees, and authorized representatives and is referred to throughout the contract documents as if singular in number and masculine in gender.

D. The phrase "The K.E.C. shall" or "by the K.E.C.", as applicable, is understood to be included as a part of each sentence, paragraph or article of these specifications unless otherwise indicated or specified.

1.3 QUALITY ASSURANCE

A. Qualification of Suppliers:

1. Commercial foodservice equipment suppliers shall submit satisfactory evidence of compliance with the following qualifications and conditions to be approved.

a. Successful completion of jobs of comparable scope.
b. Have manufacturer's authorization to distribute and install specified factory items of equipment.
c. Maintain a permanent staff experienced in the installation of foodservice equipment and preparation of professional style rough-in drawings and brochures.
d. Maintain or have access to fabrication shop meeting N.S.F. requirements. If other than foodservice equipment suppliers own fabrication shop, obtain Consultant approval of fabrication shop desired to be used.
e. Maintain or have access to a readily available stock of repair and replacement parts, together with authorized service personnel.

B. Qualification of Fabricators:

1. Fabricators shall be an N.S.F. approved organization with trained personnel and facilities to properly design, detail and fabricate equipment in accordance with the specifications and standard details contained herein.
2. Custom fabricated equipment shall bear the National Sanitation Foundation seal of approval and listed as such under N.S.F. Standards No. 2 and No. 33.
3. Only one (1) fabricator shall be used for this project, and all equipment will be fabricated at the same shop. Where units cannot be fully shop-fabricated, complete fabrication at project site.
4. Acceptable fabricators are:

a. Pro Stainless, Inc.; Keyser, WV
b. Commercial Stainless, Inc.; Bloomsburg, PA
c. Keystone Custom Fabricators, Inc.; Elizabeth, PA
d. Southern Equipment Fabricators, Inc.; Columbia, SC
e. Stainless Unlimited, Inc., Waldorf, MD
f. Other fabricators, as approved by Consultant.

C. Qualification of Manufacturers:

1. Manufacturers shall be regularly engaged in the production of items furnished and shall have demonstrated the capability to furnish similar equipment that performs the functions specified or indicated herein.

D. Standard Products:

1. Materials, products, and equipment furnished under this contract shall be the standard items of manufacturers regularly engaged in the production of such materials, products, and equipment and shall be of the manufacturer's latest design that complies with the specifications which have been produced and used successfully on other projects and in similar applications.
2. Discrepancies within contract documents should immediately be brought to the attention of the Consultant in writing for clarification prior to fabrication or ordering of standard items.

1.4 PLANS & SPECIFICATIONS

A. Specifications and drawings have been prepared to form the basis for procurement, erection, start-up and adjustment of all equipment in this contract. Plans and specifications shall be considered as mutually explanatory and work required by one, but not the other, shall be performed as though required by both. Items required by one, but not by the other shall be provided as though required by both. Work shall be accomplished as called for in specifications and shown on drawings, so that all items of equipment shall be completely functional for purpose for which they were designed. When there is any discrepancy between drawings and specifications, drawings shall govern. Bidders should seek clarification of any discrepancies from the Consultant prior to bidding.

1.5 SUBMITTALS

A. General Requirements:

1. Assemble and submit all shop drawings, rough-in drawings, brochures, color samples, etc. as a complete package. There will be no review of partial submittals.
2. Any and all costs, to all trades and parties involved, arising from delay of project due to non-submittal of the complete package by the K.E.C. within a reasonable time period shall be borne solely by the K.E.C.
3. Identify each submittal by project name, date, contractor, submittal name, and any other necessary information to distinguish it from other submittals.

B. LEED Submittals:

1. Product data for Credit IEQ 4.1: For installation adhesives and sealants, documentation including printed statement of VOC content in g/L.
2. Product data for Credit IEQ 4.4: For composite wood and laminating adhesives, documentation indicating no added urea formaldehyde resins.
3. Product data for Prerequisite WE 1: For hand washing sink faucets and spray rinse valves, documentation indicating flow rate in gallons per minute (gpm).
4. Product data for Credit WE 4: For process water use, documentation indicating water use for clothes washers (gallons/cubic feet/cycle), dishwashers (Gallons/rack), food steamers (gallons/hour), ice machines (gallons/Lb.) and pre-rinse spray valves (gallons per minute).

C. Shop Drawings:

1. Submit shop drawings electronically in PDF format, drawn on sheets equal in size to Contract Documents of equipment specified for custom fabrication including all accessories attached to each item.

2. Drawings shall be detailed and fully dimensioned to a minimum scale of 3/4"=1'-0" for plan and elevation views, and 1-1/2"=1'-0" for sections, based on the floor plan(s) and following item specifications. Drawings will be checked for thoroughness, accuracy, completeness, neatness, and returned for corrections, if necessary.

D. Rough-in Drawings:

1. Submit rough-in drawings electronically in PDF format, drawn on sheets equal in size to Contract Documents of detailed arrangement plans professionally prepared from architects dimensioned plans (not traced from Contract Documents) at a minimum scale of 1/4"=1'-0".
2. Equipment Layout Plan showing arrangement of all items specified and identified on schedule of equipment listing item number, description, quantity, manufacturer, model number, and remarks.
3. Ventilation Plan showing dimensioned locations of all duct openings for ventilators and dishmachines identifying size, c.f.m. required (exhaust and supply), static pressures, and connection heights.
4. Plumbing/Electrical Plans showing dimensioned locations, sizes, elevations and capacities of all utility services required for each item of equipment in relation to finished walls, columns, and heights above finished floor.
5. Special Conditions Plan showing exact dimensions and details of all masonry bases, floor depressions, critical partition locations/heights, wall openings, reinforcing for wall and/or ceiling mounted equipment, and conduit locations for soda and compressed gas lines.

E. Equipment Brochures:

1. Submit electronic files in PDF format of manufacturer's illustrations and technical data for approval prior to procurement. All items of Standard Manufacture shall be submitted, including items purchased to be built into fabricated equipment. Each illustration shall be marked to accurately describe the item to be furnished as specified. Include all deviations from standard information (i.e., voltage, phase, load, etc.).
2. Include a separate information sheet ahead of each illustration sheet showing all service connection sizes, electrical requirements, loads, consumptions, and all accessories specified.
3. Manufacturer's suggested schematic drawings for connection of mechanical and electrical services for such items as booster heaters, disposers, or any other item of equipment that may require the same.

F. Miscellaneous Shop Drawings:

1. Submit electronic files in PDF format of manufactured equipment specified requiring clarification and approval such as, walk-in cooler/freezer drawings, ventilator drawings, utility raceway drawings, and refrigeration system drawings.

G. Operation and Maintenance Manuals:

1. Submit electronic files in PDF format for all mechanically operated equipment of standard manufacture. Include operating and cleaning/maintenance instructions, parts listing, recommended parts inventory listing and purchase source, copy of warranties, and similar applicable information.
2. Brochure covers shall bear the job name, date, and name of contractor.

H. Manufacturer's List:

1. The K.E.C. shall submit electronic files in PDF format a list of all manufacturer's representatives of the food service equipment such as convection ovens, ranges, etc., and their authorized service agencies' addresses and telephone numbers; to be presented after submission of manufacture data.

I. Samples:

1. Samples of materials, products, and fabrication methods, shall be submitted for approval upon request at no additional cost, before proceeding with work.

J. Re-submission Requirements:

1. Shop Drawings:

a. Revise initial drawings as required and resubmit in accordance with submittal procedures.
b. Indicate on drawings all changes which have been made in addition to those requested by Consultant.

2. Product Data and Samples:

a. Submit new data and samples as required for initial submittal.
b. Make all re-submittals within fourteen (14) working days from date of Consultants previous action.

K. Approvals:

1. After approval of the submittals listed above, furnish as many prints and copies as are required for the various trades, the Owner, the Architect, and the Consultant.
2. The approval of the shop drawings will be general and shall not relieve the K.E.C. of responsibility for proper fitting, finishing, quantities, and erection of work in strict accordance with the contract requirements, nor does it relieve him of the responsibility of furnishing material and workmanship not indicated on approved shop drawings but required for the completion of his work.
3. Approval by the Consultant and/or Owner of the manufacturer's data submitted by the K.E.C. does not waive the responsibility of K.E.C. to furnish each item of equipment in complete compliance with the specifications and drawings. Discrepancies between Contract Documents and furnished equipment shall be corrected even after approval and installation of this equipment at no additional cost to the Owner.

1.6 PRODUCT DELIVERY, STORAGE AND HANDLING

A. Delivery:

1. Equipment shall be delivered to the job site only after the building is weather-safe and vandal-safe.

B. Storage:

1. Store equipment in an area convenient to the point of installation in such a way that it can be protected from the weather and job hazards.

C. Protection:

1. Wrapping and protective coatings shall remain on all items until ready for use and in the case of stainless steel items, until installation is complete and the job is ready for cleaning.
2. Existing equipment not scheduled for removal but to remain within the construction area shall be wrapped with protective plastic and/or padding to prevent damage and shall remain on all items until installation is complete and the job is ready for cleaning.

D. Damage:

1. All responsibility shall rest with the K.E.C. for any damage or loss incurred prior to final acceptance. Such items as may be lost or damaged shall immediately be replaced or repaired to a new condition to the complete satisfaction of and at no additional cost to the Owner.

1.7 JURISDICTION TRADE AGREEMENTS AND RESTRICTIONS

A. Include the work specified, shown or reasonably infer able as part of foodservice equipment. Portions of this work may be subcontracted to those qualified to do such work, as may be necessary because of jurisdictional trade agreements and restrictions.

1.8 REGULATIONS AND CODES

A. Except as otherwise indicated, each item of equipment shall comply with the latest current edition of the following standards as applicable to the manufacture, fabrication, and installation of the work in this section.

1. N.S.F. Standards: Comply with National Sanitation Foundation Standards and criteria, and provide N.S.F. "Seal of Approval" on each manufactured item and major items of custom-fabricated work.
2. U.L. Standards: For electrical components and assemblies, provide either U.L. labeled products or, where no labeling service is available, provide a complete index of the components used as selected from the U.L. "Recognized Component Index".
3. A.N.S.I. Standards: For gas-burning equipment, comply with A.N.S.I. Z21-Series standards. Comply with A.N.S.I. B57.1 for compressed gas cylinder connections and with applicable standards of the Compressed Gas Association for water connection air gaps and vacuum breakers.
4. A.G.A.: All gas-fired equipment shall be A.G.A. Approved, equipped to operate on the type gas available at the job site and shall contain 100% automatic safety shut-off devices.
5. N.F.P.A. Standards: Comply with N.F.P.A. Bulletin 96 for exhaust systems and with N.F.P.A. Bulletins 17, 17A & 96 and U.L. 300 for fire extinguishing systems.
6. A.S.M.E. Code: Comply with A.S.M.E. boiler code requirements for steam generating and steam heated equipment. Provide A.S.M.E. inspection, stamps, and certification of registration with National Board.
7. National Electric Code: Comply with N.E.C. Volume 5 for electrical wiring and devices included with foodservice equipment.

8. All authorities having jurisdiction over this type of equipment and/or installation.
9. Where specifications and/or drawings require mechanical, electrical or refrigeration work to be performed, such work shall be done in strict conformance to other portions of the Base Building Specification which sets forth standards for this type of work.
10. Where there exists two standards or codes for one type of work, the stricter method shall govern.

1.9 WARRANTIES

A. Warrantee in writing all equipment and fabrication against defects and workmanship for a period of two (2) years from date of acceptance.

1. Each piece of mechanical equipment shall be listed, together with the authorized service and repair agency whom the Owner will call should malfunctions occur within the two-year (2) guarantee period.

B. Refrigeration system compressors shall be warranted for five (5) years by the manufacturer. Free refrigeration service, including parts and labor, shall be furnished for two (2) years from date of acceptance.

1.10 JOB CONDITIONS

A. Visit the job site to field check actual wall dimensions and roughing-in and shall be responsible for fabricating and installing the equipment in accordance with the available space and utility services as they exist on the job site.

B. Check all door openings, passageways, elevators, etc., to be sure that the equipment can be conveyed to its proper location within the building and if necessary, check the possibility of holding wall erection, placement of doorjambs, windows, etc. for the purpose of moving the equipment to its proper location with the Contractor. Any removal and rebuilding of walls, partitions, doorjambs, etc. necessary to place the equipment, or if caused by incorrect information on the Contractor's drawings, shall be done at the expense of the K.E.C., at no additional cost to the Owner.

C. Notify the Consultant and Owner before fabrication of equipment of any discrepancies between plans and specifications and actual conditions on the job.

D. Before finished floors, walls, and/or ceilings are in place, physically check the location of all "rough-ins" at the job site. Report discrepancies in writing.

E. Any changes required after fabrication has been started to ensure equipment accurately fitting the space as it exists and conforming to actual field dimensions on the job shall be made at no additional cost to the Owner.

F. If special hoisting equipment and operators are required, include such cost as part of the bid for this work.

1.11 CHANGES IN THE WORK

A. The Owner reserves the right to require reasonable modification to be made in the routing of work and relocation of equipment. This specifically refers to conditions where interference

occurs or where more desirable accessibility can be obtained or whose materials cannot be installed because of structural or mechanical conditions encountered. Such changes shall be made at no additional cost to the Owner.

1.12 PATENTS

A. Hold harmless and save the Owner and its officers, consultants, servants and employees from liability of any nature or kind, including costs and expenses for or on account of any copyrighted, patented, or un-patented invention, process, trademark, design, device, material, article, or appliance manufactured or used in the performance of the contract, including its use by the Owner, unless otherwise specifically stipulated in the Contract Documents.

B. If the Contractor has information that the process or article specified is an infringement of a patent, he shall be responsible for such loss unless he promptly gives such information to the Owner in writing. The contract price shall include all royalties or costs arising from the use of any or all of the above which are, in any way, involved in the contract.

1.13 CONTRACTOR'S WARRANTY

A. The Contractor represents and warrants:

1. That he is financially solvent and that he is experienced in and competent to perform the types of work or to furnish the plans, materials, supplies or equipment, to be so performed or furnished by him.
2. That he is familiar with all Federal, State, municipal, and department laws, ordinances, orders, and regulations, which may, in any way, affect the work of those employed therein, including, but not limited to, any special acts relating to the work or to the project of which it is a part.
3. That such temporary and permanent work required by the contract as is to be done by him can be satisfactorily constructed and used for the purpose for which it is intended and that such construction will not injure any person or damage any property.
4. That he has carefully examined the plans, specifications, addenda, if any, and the site of the work and that, from his own investigations, he has satisfied himself as to the nature and location of the work, the character, quality, and quantity of materials likely to be encountered, the character of equipment and other facilities needed for the performance of the work, the general and local conditions, and all other materials which may, in any way, affect the work or its performance.
5. That he has satisfied himself as to the existing openings and accesses to the foodservice area through which his equipment shall be required to pass and that he is responsible for his equipment being delivered in as many sections as necessary to conform to the available space dictated by these existing limitations.

1.14 SUBSTITUTIONS

A. Bids submitted shall be for the specific manufacturer and model, size, capacity, and accessories, as specified or shown on the drawings.

B. The K.E.C. may quote upon brands and models of equipment other than those specified as a substitute. In the event that it is desired to request approval of substitute material, product, article, process, or item of equipment in lieu of that which is specified, submit a written request at least (10) working days prior to date of bids, setting forth the proposed substitution in detail,

including an itemized analysis of the addition or deduction in the amount of the contract, if any, which will result if the substitution is approved. Each such request shall include a complete description of the proposed substitute, the name of the material or equipment for which it is to be substituted, drawings, cuts, performance and test data and any other data or information necessary for a complete evaluation. If approved, bidders will be notified in the form of addendum.

C. The Contractor shall be held responsible for additional costs to himself or any other prime contractor for changes required to install materials, devices, equipment, etc., which the Contractor has substituted for that specified.

D. The Owner reserves the right to award a contract or contracts based upon the inclusion or exclusion of one or more of the alternate estimates. The description of all workmanship and materials under the various headings of the specifications shall have the same meaning and force when applied to similar workmanship and materials in the alternate. If the descriptions are not specific, the workmanship shall be the best quality and the materials the best commercial grade.

E. Whenever any product is specified in the Contract Documents by reference to the name, trade name, make, or catalog number of any manufacturer or supplier, the intent is not to limit competition but to establish a standard of quality which is necessary for the project. Products of other manufacturers meeting the established criteria will be considered. However, please take note that the plumbing, electrical, steam, heating, ventilating, and air-conditioning drawings prepared by the consulting engineers, have been engineered based on the first product named under each item number designation. Therefore, any other product which is submitted for approval in lieu of the primary item specified, shall conform to the rough-in requirements established for the first product named, as well as physical size and building construction requirements.

F. Any equipment listed which is not in accordance with the provisions of these specifications will be rejected. If the Contractor fails to submit for approval within the specified time the list of equipment as required herein, the Consultant shall then have the right to make the final equipment selection. The selection made by the Consultant shall strictly conform to these specifications and will be final and binding, and the items shall be furnished and installed by the Contractor without change in the contract price at the time of completion.

G. G.It shall be the responsibility of the K.E.C. to prove that substitutions are equal to specified items. **NYIKOS ASSOCIATES, INC.** as the Owner's representative, shall be the determining authority as to the acceptability or equality of the substitutions. <u>No substitutions shall be approved after bids are received</u>.

1.15 DESIGN/MODEL CHANGE, DISCONTINUED ITEMS

A. All equipment specified shall be of latest design. Any improvements made in design and construction of prefabricated items before equipment is actually delivered to the project site, shall be incorporated in equipment, at no additional cost, provided such incorporation does not delay delivery date of equipment.

B. In the event of an item being discontinued after specified and prior to delivery to project site, the K.E.C. shall be responsible for notifying the Consultant in writing of the discontinued item

and request an alternate of equal performance, including all accessories, at no additional cost to the Owner.

PART 2 - PRODUCTS

2.1 GENERAL

A. The equipment and its component parts shall be new and unused. All items of standard manufactured equipment shall be current models at the time of delivery. All parts subject to wear, breakage, or distortion shall be accessible for adjustment, replacement, and repair.

B. Means shall be provided to ensure adequate lubrication for all moving parts. All oil holes, grease fittings, and filler caps shall be accessible without the use of tools.

C. The design of the equipment shall be such as to provide for safe and convenient operation. Covers or other safety devices shall be provided for all items of equipment presenting safety hazards. Such guards or safety devices shall not present substantial interference to the operation of the equipment. All guards shall provide easy access to the guarded parts.

D. Trim shall not be an acceptable substitute for accuracy and neatness. When trim is required and accepted by the Consultant and the Owner in lieu of rejection of items of equipment, it shall be the K.E.C.'s responsibility to provide same at no additional cost.

E. Unless otherwise specified herein, no material lighter than #20 gauge shall be incorporated into the work. All gauges for sheet iron and sheet steel shall be U.S. Standard Gauges, and finished equipment gauge thickness shall not vary more than 5% plus or minus from the thickness indicated below.

GAUGE	THICKNESS	GAUGE	THICKNESS
#10	0.1406	#16	0.0625
#12	0.1094	#18	0.0500
#14	0.0781	#20	0.0375

F. Materials or work described in words which have a well-known and acceptable trade meaning shall be held to refer to such accepted meanings.

G. Adhesives and sealants applied within the building waterproofing envelope: Comply with low-emitting requirements in Division 01 Section “Indoor Air Quality Requirements.”

H. Composite Wood and Laminating Adhesives (shop and field applied): Contain no added urea formaldehyde resins.

2.2 MATERIALS

A. Refrigeration Systems:

1. Self-contained:

a. Whether the units be top-mounted or cabinet-mounted, they shall be started by the K.E.C. and shall be tested for maintenance of temperature.
b. All units shall be furnished with condensate evaporators.

2. Remote: Provide and install complete refrigeration system(s), charged, started, and operating properly, according to the Item Specifications and the following.

   a. Single stage compressors with air-cooled condensers operating within the recommended range of suction discharge pressure of economical operation and within the required capacity.
   b. All units shall be new and factory assembled, to operate with the refrigerant specified. Refrigerant R-404A shall be used for all medium and low temperature applications. Due to the unsettled nature of refrigerants, no refrigerant shall be used with a phase-out date of less than ten (10) years from the date of installation.
   c. Compressors shall be accessible hermetic type, Copeland or approved equal, and shall be equipped with high-low pressure control, liquid line drier, sight glass, suction and discharge vibration eliminator, and head pressure control.
   d. The system shall have a factory mounted and pre-wired control panel complete with main fused disconnect, compressor circuit breakers, contactors, and time clocks wired for single point power connection.
   e. The supporting frame shall be constructed of structural steel, fully welded, and protected against rust and corrosion with one (1) coat primer, and two (2) coats paint, unless otherwise specified.
   f. Systems specified for outdoor installation shall be fully protected in a weather-proofed housing with louvered front panel and hinged top, constructed to resist rust and corrosion, and furnished with low ambient controls. Crankcase heater shall be provided with every compressor.

3. Where specifications call for pre-piped lines (i.e., from a fixture to a valve compartment, etc.), provide such work in strict conformance with other sections of the specifications which set forth standards for this type of work or in conformity with the requirements of the Board of Fire Underwriters or ASHRAE Standards, whichever is greater.

4. Each refrigeration item specification is written to provide minimum specifications and scope of work. All refrigeration equipment shall be designed and installed to maintain the following general temperatures unless otherwise specified.

TYPE		REFRIGERATORS	FREEZERS
a.	Walk-In	+35º F./1.7º C.	-10º F./-23.3º C.
b.	Reach-In	+35º F./1.7º C.	-10º F./-23.3º C.
c.	Undercounter	+35º F./1.7º C.	-10º F./-23.3º C.
d.	Fabricated	+35º F./1.7º C.	-10º F./-23.3º C.
e.	Cold Pans	+0º F./-17.8º C.	
f.	Work Rooms	+50º F./10º C.	

5. Provide (including payment if subcontracted) all electrical and refrigeration components needed by the completed system and complete (or have completed by the respective trades) all connections of and to said components.
6. An evaporator coil defrost system shall be provided and installed by the K.E.C. on all refrigeration systems designed to operate at an evaporator coil temperature of less than +35º F. Evaporator coil units provided without electric defrost feature shall be installed with a solenoid valve in the liquid line, controlled by the time clock so as to shut off the flow of refrigerant and allow the compressor to pump down and shut off by activation of the pressure control switch.

7. Verify the requirements of and provide any or all additional refrigeration specialty(s) or component(s) required or recommended by the manufacturer for proper operation under the specific operating conditions and location of each system specified.
8. Verify and provide manufacturer's certification that the equipment selection hereinafter specified for each refrigeration system is properly sized and shall meet the operating requirements set forth for each system regarding maintaining specified operating temperature, hours of compressor running time, and system pressures and velocities as recommended by the equipment manufacturer(s).
9. All refrigeration systems shall be installed and wired in strict conformance with the manufacturer's instructions and recommendations.

B. Motors and Heating Elements:

1. Motors up to and including 1/2 HP shall be wired for 120 volt, single phase service. Motors larger than 1/2 HP shall be wired for 208 volt, single or three phase service as indicated. Motors shall be of the drip-proof, splash-proof, or totally enclosed type, having a continuous duty cycle and ball bearings, except small timing motors which may have sleeve bearings. All motors shall have windings impregnated to resist moisture. Motors located where subject to deposits of dust, lint, or other similar matter shall be of the totally enclosed type. Motors shall have ample power to operate the machines for which designated under full load operating conditions without exceeding their nameplate ratings. Insulation shall be N.E.M.A. Class B or better.
2. Heating elements having a connected load up to and including 1,000 watts shall be wired for 120 or 208 volt, single phase service, or as indicated on the drawings.

    a. Any heating element larger than 1,000 watts or any combination of elements in one fixture totaling more than 1,000 watts shall be wired for 208 volt single or three phase service, as indicated on the drawings.
    b. Fixtures having multiple heating elements may be wired for three phase service with the load balanced as equally as possible within the fixture.

C. Switches and Controls:

1. Provide recognized commercial grade signals, "on-off" pushbuttons or switches, and other speed and temperature controls as required for operation of each item, complete with pilot lights and permanent graphics, conspicuously labeled, to assist the user of each item.
2. Mount switches and controls directly adjacent the piece of equipment for which it involves, on operator's side of counter body apron, out of view to the public.
3. Provide on or for each motor-driven appliance or electrical heating or control unit, a suitable control switch or starter of the proper type and rating and in accordance with Underwriter's Code wherever such equipment is not built in. All other line switches, safety cut-outs, control panels, fuse boxes, other control fittings and connections, when not an integral part of the unit or furnished loose by the manufacturer will be furnished and installed by the Electrical Contractor, unless otherwise specified. All electrical controls, switches, or devices provided loose for field installation as a part of the item specified shall be installed in the field by the Contractor unless otherwise specified.
4. Appliances shall be furnished complete with motors, driving mechanisms, starters, and controllers, including master switches, timers, cut-outs, reversing mechanisms, and other electrical equipment if and as applicable.

D. Cover Plates:

1. All controls mounted on vertical surfaces of fixtures shall be set into recessed die stamped stainless steel cups, or mounted onto removable cover plates in such a fashion as to not protrude or interfere with the operation of each item.
2. Cover plates shall be furnished and installed for all electrical outlets, receptacles, switches and controls furnished by the K.E.C., and shall match the material and finish of the equipment to which they will be fastened.

E. Wiring and Conduit:

1. Wiring shall be properly protected in N.E.M.A. and U.L. approved metal enclosures. Only rigid steel conduit shall be used, zinc coated where unexposed and chrome plated where exposed. All wiring shall be run concealed wherever possible.
2. All equipment furnished under this contract shall be so wired, wound, or constructed so as to conform with the electrical characteristics at the job site.
3. Wiring and connection diagrams shall be furnished with electrically operated machines and for all electrically wired fabricated equipment.
4. Furnish all foodservice equipment completely wired internally using wire and conduit suitable for a wet location. Where an Electrician's services are required, the work shall be done in the K.E.C.'s factory or at his expense at the job site at no additional cost to the Owner. Provide all electrical outlets and receptacles required to be mounted on or in fabricated equipment and interconnect to a master circuit breaker panel with all wires neatly tagged showing item number, voltage characteristics, and load information. Final connection shall be made by the Electrical Contractor.

F. Cords, Plugs, and Receptacles:

1. The Electrical Contractor shall provide three- or four-wire, grounding-type receptacles for all wall and floor mounted outlets to be used for plug-in equipment with characteristics as noted on the drawings. Provide Hubbell three-wire or four-wire grounding-type connectors and neoprene cords installed on each item of plug-in equipment, as indicated on drawings and item specifications.
2. K.E.C. shall coordinate with the Electrical Contractor so that the receptacles provided will match the specific plugs provided as part of the plug-in equipment. Any changes in cords and plugs required in the field due to lack of coordination between the Electrical Contractor and the K.E.C. shall be the latter's responsibility.
3. Reduce the length of all cords furnished with the specified equipment to a suitable or appropriate length so they do not interfere with other equipment or operations.
4. Pedestal receptacles that are part of fabricated equipment exposed to view, shall be similar to T&S Model #B-1508DD single face, single gang or Model #B-1528DD single face, double gang.

G. Water Inlets:

1. Water inlets shall be located above the positive water level wherever possible to prevent siphoning of liquids into the water supply system. Wherever conditions shall require a submerged inlet, a suitable type of check valve (except in jurisdictions where check valves are prohibited) and vacuum breaker shall be placed on the fixture to form a part of same to prevent siphoning. Where exposed to view, piping and fittings shall be chrome-plated.

H. Drain Lines:

1. Plumbing Contractor shall provide and install indirect waste lines from equipment which will discharge into floor drains or safe wastes in accordance with Plumbing Rough-In Plans, chrome-plated where exposed. Extend to a point at least 1" (or as required by local codes) above the rim of the floor drain, cut bottom on 45º angle and secure in position.
2. All horizontal piping lines shall be run at the highest possible elevation and not less than 6" above finished floor, through equipment where possible.
3. No exposed piping in or around fixtures or in other conspicuous places shall show tool marks of more than one thread at the fitting.
4. All steam operating valves on or in fabricated and purchased foodservice equipment shall be provided with composition hand wheels, which shall remain reasonably cool in service.
5. Provide suitable pressure regulating valves for all equipment with such components that might reasonably be expected to be affected over a period of time by adverse pressure conditions.

I. Faucets, Valves and Fittings:

1. All sinks shall be fitted with chromium plated, swing spout faucets of same manufacturer throughout as follows, or otherwise specified in Item Specifications.

   a. Prep and Utility Sinks:
      1.) Splash-Mounted:
         a.) T&S Brass and Bronze Works, Inc., Model #B-231 with aerator.
         b.) Fisher Manufacturing Company, Model #3253 with aerator.
      2.) Deck-Mounted:
         a.) T&S Brass and Bronze Works, Inc., Model #B-221 with aerator.
         b.) Fisher Manufacturing Company, Model #3313 with aerator.

   b. Pot Sinks:
      1.) Splash-Mounted:
         a.) T&S Brass and Bronze Works, Inc., Model #B-290.
         b.) Fisher Manufacturing Company, Model #5214.

2. Pre-Rinse Assemblies:

   a. Splash-Mounted:
      1.) T&S Brass and Bronze Works, Inc., Model #B-0133-BJ with #B-109 wall bracket.
      2.) Fisher Manufacturing Company, Model #2210 with #2902-12 wall bracket.

   b. Deck-Mounted:
      1.) T&S Brass and Bronze Works, Inc., Model #B-0113-BJ with #B-510 mixing valve and #B-109 wall bracket.
      2.) Fisher Manufacturing Company, Model #2810 with #2805-CV mixing valve and #2902-12 wall bracket.

3. Vacuum Breakers:

   a. General Use:

1.) Fisher Manufacturing Company, Model #3990-8000.

b. Disposers:
1.) Splash-Mounted:
a.) T&S Brass and Bronze Works, Inc., Model #B-455.
b.) Fisher Manufacturing Company, Model #3990.
2.) Deck-Mounted:
a.) T&S Brass and Bronze Works, Inc., Model #B-456.
b.) Fisher Manufacturing Company, Model #3991.

4. Trough Inlets:

a. Fisher Manufacturing Company, Model No. #2905.

5. Other specialty faucets, pre-rinse assemblies, vacuum breakers, and trough inlets, as specified under Item Specifications.
6. All sink compartments shall be fitted with 2" NPT male, chrome-plated, brass rotary waste valves complete with overflow assemblies and stainless steel strainers.

a. Prep and General Utility Sinks:
1.) Fisher Manufacturing Company, Model #6100.

b. Pot Sinks:
1.) Fisher Manufacturing Company, Model #6102.

7. Refer to Division 22 for all other fittings.

J. Metals and Alloys:

1. Stainless steel sheets shall conform to ASTM 240, Type 302, Condition A, 18-8, of U.S. Standard Gauges as previously indicated under paragraph 2.1.E.

a. All exposed surfaces shall have a No. 4 finish. A No. 2B finish shall be acceptable on surfaces of equipment not exposed to view.
b. All sheets shall be uniform throughout in color, finish, and appearance.
c. Rolled shapes shall be of cold rolled type conforming to ASTM A36.

2. Stainless steel tubing and pipe shall be Type 304, 18-8, having a No. 4 finish, and shall conform to either ASTM A213 if seamless or ASTM A249 if welded.
3. Where galvanized metal is specified, it shall be copper-bearing galvanized iron, cold-rolled, stretcher leveled, bonderized, re-rolled to insure a smooth surface, and used in the largest possible sizes with as few joints as necessary.
4. Galvanizing shall be applied to rolled shapes in conformance with ASTM A123, and to sheets in conformance with ASTM A526, coating designation G-90.

K. Castings:

1. Castings shall consist of corrosion resisting metal (white metal) containing not less than 30% nickel. All castings shall be rough ground, polished, and buffed to bright lustre and free from pit marks, runs, checks, burrs, and other imperfections. In lieu of corrosion resisting metal castings, die-stamped or cast 18-8 stainless steel will be acceptable.

L. Hardware and Casters:

1. All hardware shall be of heavy duty type, satin finished chromium plated brass, cast or forged or highlighted stainless steel of uniform design. All hardware shall be a well-known brand, and shall be identified by the manufacturer's name and model number for easy replacement of broken or worn parts.
2. Casters on custom-built equipment shall be heavy duty type, ball bearing, solid or disc wheel, with grease-proof rubber, neoprene, or polyurethane tire. Wheel shall be 5" diameter, minimum width of tread 1-3/16", minimum capacity per caster 250 pounds, unless otherwise noted.

    a. Solid material wheels are to be provided with stainless steel rotating wheel guard.
    b. All casters shall have sealed wheel and swivel bearings, polished plated finish and be N.S.F. approved.
    c. All equipment specified with casters shall have a minimum of two (2) with brakes installed on opposite corners, unless otherwise noted.

M. Locks:

1. When specified, doors and drawers of all custom fabricated or manufactured equipment shall be provided with cylinder locks, disc tumbler type with stainless steel faceplate as manufactured by Standard-Keil Mfg. Co., or approved equal.

    a. Provide two (2) sets of keys for each lock.
    b. All locks shall be keyed alike, except at cashiers stations or unless otherwise specified.

N. Thermometers:

1. All fabricated refrigerated compartments shall be fitted with exterior mounted, adjustable, dial or digital thermometers with flush bezels, and shall be calibrated after installation.

O. Sealants:

1. Sealant, wherever required, shall conform to ASTM C 920; Type S Grade NS, Class 25, Use Nt, with characteristics that when fully cured and washed meets requirements of Food and Drug Administration Regulation 21 CFR 177.2600 and N.S.F. RTV-732 for use in areas where it comes in contact with food.
2. Dow-Corning #780 or General Electric "Silastic", or approved equal, in either clear or approved color to match surrounding surfaces and applied in accordance with sealant manufacturers recommendations for a smooth, sealed finish.

P. Plastic Laminate:

1. Plastic laminate surfaces shall be laminated with thermosetting decorative sheets of the color, pattern, and style as selected by the Architect.

    a. Horizontal surfaces shall be laminated with sheets conforming to Federal Specification L-P-508F, Style D, Type I (general purpose), Grade HP, Class 1, 1/16" thick, satin finish, with rough sanded backs.

b. Vertical surfaces shall be laminated with sheets conforming to Federal Specification L-P-598F, Style D, Type II, (vertical Surface), Grade HP, Class 1, non-forming, satin finish, 1/32" thick or heavier.
c. Curved surfaces shall be laminated from sheets conforming to Federal Specification L-P-508F, Style D, Type III (post-forming), Grade HP, Class 1, satin finish.
d. Balance sheets for backs in concealed locations shall be either reject material of the same type and thickness as the general purpose grade facing or may be .020" thick laminate backing sheets conforming to Federal Specification L-P-00508E, Style ND, Type V (backing sheet), Grade HP.

2. Adhesives:

a. For application of plastic laminate to wood substrates of horizontal surfaces shall be a phenolic, resorcinol, or melamine adhesive conforming to Federal Specification MMM-A-181C, producing a waterproof bond.
b. For applying plastic laminate to vertical surfaces shall be either a waterproof type or a water-resistant type such as a modified urea-formaldehyde resin liquid glue conforming to Federal Specification MMM-A-188C.
c. Contact adhesive will not be acceptable.

2.3 FABRICATION AND MANUFACTURE

A. Materials and Workmanship:

1. Unless otherwise specified or shown on drawings, all materials shall be new, of best quality, perfect, and without flaws. Material shall be delivered and maintained on the job in an undamaged condition.
2. Fabrication shall be equal to the standards of manufacture used by all first class equipment manufacturers, performed by qualified, efficient, and skilled mechanics of the trades involved.
3. All items of standard equipment shall be the latest model at time of delivery.
4. All fabricated work shall be the product of one manufacturer of uniform design and finish.
5. Each fabricated item of equipment shall include all necessary reinforcing, bracing, and welding with the proper number and spacing of uprights and cross members for strength.
6. Wherever standard sheet sizes will permit, the tops of all tables, shelves, exterior panels of cabinet type fixtures, and all doors and drainboards shall be constructed of a single sheet of metal.
7. Except where required to be removable, all flat surfaces shall be secured to vertical and horizontal bracing members by welding or other approved means to eliminate all buckle, warp, rattle, and wobble. All equipment not braced in a rigid manner and which is subject to rattle and wobble shall be unacceptable, and the K.E.C. shall add additional bracing in an approved manner to achieve acceptance.

B. Sanitary Construction:

1. All fabricated equipment shall be constructed in strict compliance with the standards of the National Sanitation Foundation as outlined in their Bulletin on Food Service Equipment entitled "Standard No. 2" dated October 1952, and in compliance with the local and State Public Health Regulations in which the installation will occur.

2. All fabricated equipment shall bear the N.S.F. "Seal of Approval".

C. Construction Methods:

1. Welding:

a. All welding shall be the heliarc method with welding rod of the same composition as the sheets or parts welded. Welds shall be complete, strong, and ductile with excess metal ground off and joints finished smooth to match adjoining surfaces; free of mechanical imperfections such as gas holes, pits, cracks, etc., and shall be continuously welded so that the fixtures shall appear as one-piece construction. Butt welds made by spot solder and finished by grinding shall not be acceptable.
b. Spot welds shall have a maximum spacing of 3". Tack welds shall be of at least 1/4" length, and spaced no greater than 4" from center to center. Weld spacing at the ends of the channel battens shall not exceed 2" centers.
c. In no case shall soldering be considered as a replacement for welding, nor shall any soldering operation be done where dependence is placed on stability and strength of the joint.
d. Fixtures shall be shop fabricated of one piece and shipped to the job completely assembled wherever possible. Equipment too large to transport or enter the building in one piece shall be constructed so that the field joints can be welded at the job site.
e. All exposed joints shall be ground flush with adjoining material and finished to harmonize therewith. Whenever material has been sunk or depressed by welding operation, depression shall be suitably hammered and peened flush with the adjoining surface and ground to eliminate low spots. In all cases the grain of rough grinding shall be removed by successive fine polishing operations.
f. All unexposed welded joints on undershelves of tables or counters of stainless steel shall be suitably coated at the factory with an approved metallic-based paint.
g. After galvanized steel members have been welded, all welds and areas where galvanizing has been damaged shall have a zinc dust coating applied in conformance with Military Specification Number MIL-P-26915.

2. Joints:

a. Butt joints and contact joints wherever they occur, shall be close fitting and shall not require a filler. Wherever break bends occur, they shall be free of undue extrudence and shall not be flaky, scaly, or cracked in appearance; where such breaks do mar the uniform surface appearance of the material, all such marks shall be removed by suitable grinding, polishing, and finishing. Wherever sheared edges occur, they shall be free of burrs, fins, and irregular projections and shall be finished to obviate all danger of laceration when the hand is drawn over them. In no case shall overlapping materials be acceptable where miters or bullnosed edges occur.
b. Field welded joints shall be ground smooth without dips and irregularities and finished to match original finish.

3. Bolt, Screw and Rivet Construction:

a. All exposed surfaces shall be free from bolt and screw heads. When bolts are required, they shall be of the concealed type and be of similar composition as the metal to which they are applied.
b. Where bolt or screw threads on the interior of fixtures are visible or may come into contact with hands or wiping cloths, they shall be capped with a stainless steel or chrome acorn nut and stainless steel lock washer.
c. If rivets are used to fasten rear paneling to the body of the fixture, such rivets shall be stainless steel. In no case shall iron rivets be used.

4. Sound Deadening:

a. Schnee Butyl-Sealant 1/2" wide rope continuously between all frame members and underside of stainless steel table tops, overshelves and undershelves.
b. Tighten stud bolts for maximum compression of sealant.

5. Hi-Liting:

a. All horizontal edges of stainless steel tops, splashes, tops of raised rolled rims, and edges of all exposed doors, handles and shelf edges shall be hi-lited, in uniform design by grinding with abrasive not coarser than #240 grit, then polishing with compound to a uniform mirror finish.

6. Polishing:

a. The grain of polishing shall run in the same direction on all horizontal and on all vertical surfaces of each item of fabricated equipment except in the case where the finish of the horizontal sections of each shall terminate in a mitered edge.
b. Where sinks and adjacent drainboards are equipped with backsplash, the grain of the polishing shall be consistent in direction throughout the length of the backsplash and sink compartment.

7. Finishes:

a. Paint and coatings shall be of an N.S.F. approved type suitable for use in conjunction with foodservice equipment. Such paint or coating shall be durable, non-toxic, non-dusting, non-flaking and mildew resistant, shall comply with all governing regulations, and shall be applied in accordance with the manufacturers recommendations.
b. All exterior, galvanized parts, exposed members of framework, and wrought steel pipe where specified to be painted shall be cleaned, primed with rust inhibiting primer, de-greased, and finished with two (2) coats of glossy enamel grey hammertone paint, unless otherwise noted.
c. Where baked enamel finishes are specified, they shall be oven baked on the fixtures for a minimum of 1-1/2 hours at a minimum temperature of 300º F.
d. Fabricated equipment shall be spray coated with plastic suitable for protecting the equipment during transport and installation. The coating shall be easily removable after the equipment installation is complete at the job site, and final clean-up has begun.

D. Construction:

1. Legs:

    a. All tubular stands for open base tables, sinks, or dishtables shall have legs constructed of 1-5/8" O.D. stainless steel tubing, with 1-1/4" O.D., #16 gauge stainless steel crossbracing running between legs at a point 10" above finished floor.
    b. All joints between legs and crossbracing shall be welded and ground smooth, full 360º.
    c. The top end of legs shall be closely fitted into fully-enclosed stainless steel conical gussets no less than 3" high, similar to Klein #481-58 or #483-58, or approved equal.
    d. Gussets shall be fully welded to framing reinforcing members, so that, set screw is not visible from front.
    e. Legs without crossrails will not be accepted.
    f. Legs shall be spaced at not more than 5'-6" on centers, unless otherwise specified.

2. Feet:

    a. All tubular legs will be swedged for appearance and close fit to United Show Case #BF-158, or approved equal, fully enclosed, stainless steel bullet-shaped foot.
        1.) The foot shall be threaded into a collar and completely welded inside the tubular leg to permit a maximum adjustment of 2" without any thread exposure.
        2.) Threads shall be National Course Series Class 2 fit or better, machined to prevent end play when foot is at maximum adjustment.
        3.) The bullet-shaped foot shall have slightly rounded bottom to protect the floor, and a minimum bearing surface of 3/4" diameter of stainless steel-to-floor contact.
        4.) Bottom of tubular leg shall be finished off smoothly to provide a sanitary fitting and prevent the accumulation of grease or other debris.

    b. Cabinet type fixtures shall be mounted on 8" high die-stamped, sanitary, two-piece stainless steel legs no less than 2-3/4" in diameter at the top, Component Hardware #A72-0811, or approved equal.
        1.) The bottom fully enclosed, stainless steel, bullet-shaped foot threads up into the inside of the upper member, with a male threaded 5/8" bushing to permit maximum adjustment of 2" without thread exposure.
        2.) The upper section shall be stamped in a neat design with a flared inverted shoulder and fully welded to a base plate designed for anchoring to the channel underbracing.

3. Table Tops:

    a. Tables shall be constructed of stainless steel, and of a thickness not less than #14 gauge with 1-3/4" by 120º rolled edges, or as otherwise specified and detailed.
    b. All corners shall be bull-nosed and of the same radius as rolled edges.
    c. Joints where required shall be butt-welded and ground smooth to present a uniform one-piece appearance.
    d. All tops shall be reinforced on the underside with a fully welded framework of 1-1/2"x1-1/2"x1/8" galvanized steel angles with the framing extending around the top perimeter and crossbraced on 24" maximum centers.

e. 1"x4"x1" galvanized or stainless steel, fully welded, cross channel, closed end members placed at each pair of legs with one (1) channel running lengthwise will also be acceptable.
f. All tops shall be reinforced so that there will be no noticeable deflection.
g. Metal tops where adjacent to walls or other items of equipment, shall be constructed with integral, coved, back and/or endsplashes as required and specified in accordance with the standard details contained herein. Close all ends of splashes.

4. Enclosed Bases:

a. All enclosed bases or cabinet bodies shall be of seamless #18 gauge stainless steel construction, enclosed on the ends and sides as required and called for under each item.
b. Ends of body shall terminate at front or operator's side in a 2" wide mullion, vertical, and completely enclosed. All intermediate mullions shall be completely enclosed.
c. The bases shall be reinforced at the top with a framework of 1-1/2"x1-1/2"x1/8" galvanized angles, with all corners mitered and welded solid.
d. Underside of top shall be reinforced with channels and gussets where necessary. Additional angles and cross members shall be provided to reinforce shelves and support tops under heavy tabletop equipment.
e. Where sinks or other drop-in equipment occur, provide additional reinforcing extending crosswise, both sides of opening.
f. In the case of fixtures fitting against or between walls, the bodies shall be set in 1" or 2" from the wall line, with the tops continuing to the wall line with integral, coved splashes as specified. Extend vertical face of body to the wall line only. This will permit adjustment to wall irregularities. Vertical trim strips will not be accepted.
g. Bodies shall be fitted with counter style stainless steel legs as hereinbefore specified.

5. Drawers:

a. Drawers, where specified, shall have removable pan inserts of #18 gauge stainless steel, and shall be approximately 20"x20"x5" deep unless otherwise specified.
   1.) Perimeter top edge shall be flanged out 1/2".
   2.) All interior horizontal corners shall be rounded on a 1" radius, and all interior vertical corners shall be rounded on a 2" radius.

b. Fronts shall be double pan #16 gauge stainless steel construction, 1" thick, insulated with a semi-rigid, fiberglass board, un-faced, having a three-pound density.
   1.) The top of the drawer face shall be formed as an integral pull by breaking the front pan back on a 45º angle 1", then straight up 1", back to front 1", and then down at the front 3/4".
   2.) Drawer front shall have all edges and corners ground smooth with a radius edge pull.

c. The drawer shall have an all welded frame of 1"x1", #16 gauge stainless steel angles sized to fit the removable pan insert.

d. Drawers shall operate on #12 gauge slides with roller bearings with hardened and ground raceways, Grant, Model #3320, or approved equal. Slides shall be pitched approximately 3/8" per foot to permit self-closing action.
e. Drawers shall be adequately and neatly fitted to the guides to permit easy operation without rattle or binding.
f. Slides and frame shall be reinforced to support a dead weight of 150 pounds when drawer is fully extended.
g. Adjustable stops shall be provided for each drawer at the fully-opened position, and be readily lift-able by hand for easy removal of drawer.
h. All drawers not mounted inside a cabinet body shall be completely enclosed in an #18 gauge stainless steel box-type enclosure and suspended from angle framing under the fixture top. The housing bottom shall be flanged and welded to an #18 gauge stainless steel reinforcing channel extending across the open end.

6. Sliding Doors:

a. Sliding doors shall be of the double pan type, with the exterior pan constructed of &2#18 gauge stainless steel with all four sides channeled and corners welded. The interior pan shall be similarly constructed of #20 gauge stainless steel, set into the exterior pan, and welded in place.
b. All doors shall be insulated with semi-rigid fiberglass board, un-faced, having a three-pound density. Styrofoam shall not be acceptable.
c. Doors 18" wide or greater, shall have internally welded 4" wide reinforcing channels to prevent warpage.
d. Each door shall be fitted with a positive flush-type stainless steel pull, Standard-Kiel #1262-1014-1283 recessed handle, or approved equal.
e. In the back of each door install a 1"x1", #16 gauge stainless steel angle stop welded in a suitable location to prevent the doors from overpassing the flush pulls.
f. Doors in the closed position shall overlap each other by no more than 2".
g. Each door shall be fitted with two (2), 1-3/8" ball bearing sheaves fastened to 1"x1/8" stainless steel bar stock welded to the top corners of each door for suspending on an overhead #16 gauge stainless steel channel track. The hangers shall be tapped for 1/4"-20 thumb screw vertical locks which prevent the doors from jumping the track in operation while permitting easy removal for cleaning without tools.
h. Insure that the bottom of the doors are positively and continuously guided to assure proper alignment and passing regardless of the position of each door.
i. Provide hard rubber bumpers for doors to close against to insure quiet operation.

7. Hinged Doors:

a. Hinged doors shall be of the same materials and construction as sliding doors previously specified.
b. Hinges shall be heavy duty, stainless steel, removable type, and fastened by tapping into 1/4"x3/4" stainless steel bar stock inside the door pan and behind the door jamb.
c. The door face shall be flush with the cabinet body when fully closed.
d. Size widths of doors equally when installed in pairs, or in series with other pairs, with no door being greater than 36" in width.
e. Doors shall be held closed by permanent magnetic closure devices of an approved type and of sufficient strength to hold the doors shut. Install two (2) per door

(minimum), mounted to the door jamb, top and bottom, with opposing chrome-plated steel plates securely fastened to the inner panel of the doors.

8. Undershelves:

   a. All open base tables shall be provided with full-length undershelves of #16 gauge stainless steel fully welded to legs with all joints ground smooth and polished.
   b. Front edge shall turn down 1-1/2" and under 1/2".
   c. Turn up rear and ends 2", with integral coved radius, when specified.
   d. If required by width, provide 1-1/2"x1-1/2"x1/8" galvanized angle bracing mounted to underside, full length.

9. Interior Shelves:

   a. All interior shelves within cabinet bodies, enclosed bases and overhead cabinets, shall be of #16 gauge stainless steel.
   b. Removable shelves shall be constructed in equal sections, and rest in 1-1/2"x1-1/2"x1/8" stainless steel angle frame. Cove all horizontal corners in accordance with N.S.F. requirements.
   c. Stationary shelves shall have 2" turn-up on back and ends, and continuously welded to cabinet body, polished and ground smooth to form a one-piece interior free of any crevices.
   d. Front edge shall turn down 1-1/2" and under 1/2", and finished with "z" bar forming completely enclosed edge for maximum strength and sanitation.
   e. Provide 1-1/2"x1-1/2"x1/8" angle bracing mounted to underside, full length.

10. Elevated Shelves:

   a. Shelves over equipment not adjacent to a wall shall be mounted on 1" diameter #16 gauge stainless steel tubular standards neatly fitted with stainless steel base flanges, unless otherwise specified.
   b. The top of the tubular standards shall be completely welded to #14 gauge stainless steel support channels, full width of overshelf.
   c. Inside the tubular standard, and welded to same, provide 1/2" diameter steel tension rod extended through countertop and securely anchored to lower framework reinforcing with nuts and lock washers in such a manner as to assure a stable, sway-free structure.
   d. If required by width, provide 1-1/2"x1-1/2"x1/8" stainless steel angle bracing mounted to underside, full length.
   e. Cantilevered shelves, when called for, shall be #16 gauge stainless steel supported on #14 gauge stainless steel brackets welded to 1-5/8" O.D. stainless steel tubular standards extending through the backsplash, and fully welded to the table framework. Provide Klein #481-SH welded sleeves where standards penetrate backsplash.

11. Wall Shelves:

   a. Open wall shelves shall be constructed of #16 gauge stainless steel with back and ends turned up 2", positioned 2" out from face of wall, with all corners welded, and supported on #14 gauge stainless steel brackets.

b. Brackets shall be flanged inward beneath the shelf and at the wall 1-1/2" with intersecting flanges completely welded, and attached to shelf with studs welded to the underside and bolted with stainless steel lock washers and chrome-plated cap nuts.
c. Each bracket shall be fastened to the wall with a minimum of two (2) 1/4"-20 stainless steel bolts anchored securely by means of toggles or expansion shields.

12. Sinks:

a. All sinks shall be the size and shape as shown on drawings, and constructed of #14 gauge stainless steel with backs, bottoms and fronts formed of one continuous sheet and the ends welded in place.
b. Sinks shall have all corners, both vertical and horizontal, coved on a 3/4" radius electrically welded, ground smooth and polished. Solder in filleted corners will not be acceptable.
c. Multiple compartment sinks shall be divided with double wall, #14 gauge stainless steel partitions with a 1/2" radius on top and all corners rounded as other corners, continuously welded, ground smooth and polished.
d. The bottom of each compartment shall be creased to a die stamped recess, tapered and shaped to receive a lever type waste without the use of solder, rivets, or welding.
e. Provide #14 gauge stainless steel waste lever angle bracket mounted to underside of compartment at front.
f. The front and exposed ends of sinks shall be fabricated with a 1-1/2", 180º rolled edge. The back and ends adjacent to walls or other fixtures shall be turned up with integral coved edge 12" high and returned 2-1/2" at the top on a 45º angle. Cap ends of all exposed splashes.
g. Unless otherwise specified, two (2) faucet holes on 8" centers shall be provided, located over the center line of partitions between compartments, 2-1/2" down from splash break.
h. Gussets for legs shall be fully welded all around to #12 gauge stainless steel triangular plates fully welded to underside of sink.
i. Sinks fabricated into working surfaces shall be constructed of the same material and in like manner to sinks specified above, except rolled edge and backsplash shall be omitted and the bowl shall be completely welded integral and flush with the working surface. Where basket type wastes are called for, they shall be fitted with removable seats.
j. Where sink bowls are exposed, the exterior shall also be polished to a #4 finish.

13. Sink Drainboards:

a. Drainboards shall be constructed of the same material as the sinks and shall be welded integral to same.
b. The front portion of drainboards shall continue the 1-1/2", 180º rolled edge of sink bowls on a continuous and level horizontal plane.
c. The surface of the drainboard shall pitch from 2-1/2" at the end furthest from the sink, to 3" at the bowl; or 1/8" per foot. In addition, the bottom surface shall be dished toward the center for complete drainage.
d. The backsplash of the drainboard shall match the rear of the sink contour and shall be welded integral thereto, running parallel to the floor.

e. Drainboards shall be reinforced on the underside with a framework of 1"x4"x1" stainless steel channel underbracing placed at each pair of legs, with exposed ends capped, and one (1) channel running lengthwise.
f. Where disposer cones are fabricated into drainboards, additional 1"x4"x1" stainless steel channels shall be welded into the top framing, spanning the drainboard from front-to-back on both sides of the cone and located not more than 3" to either side.
g. Disposer control panels or switches shall be supported beneath drainboards, when specified, by means of a #12 gauge stainless steel mounting bracket.

14. Dishtable Tops:

a. Dishtables shall be constructed of #14 gauge stainless steel with all corners, both vertical and horizontal, coved on a 3/4" radius electrically welded, ground smooth and polished. Solder in filleted corners will not be acceptable.
b. Fronts and exposed ends shall be fabricated with a 3" high, 1-1/2", 180º rolled edge with rounded corners. The back and ends adjacent to walls or other fixtures shall be turned up with integral coved edge 12" high and returned 2-1/2" at the top on a 45º angle. Cap ends of all exposed splashes.
c. All tops shall slope 1/8" per foot (minimum).
d. Dishtables shall be reinforced on the underside with a framework of 1"x4"x1" stainless steel channel underbracing placed at each pair of legs, with exposed ends capped, and one (1) channel running lengthwise fully welded between front-to-back channels.
e. Where tops fit into dishmachines, they shall turn down and into, forming a sealed watertight fit, and attached according to dishmachine manufacturers instructions.
f. On each side of dishmachine, tables shall be provided with integral splash shields as part of the backsplash.
g. Silicon filling of gaps caused by poor fit will not be acceptable.
h. On corner-type door machines, provide #14 gauge stainless steel wall-mounted, splash panel to protect adjacent wall, full width of door opening.

15. Cafeteria Style Counters:

a. All counters shall be constructed as previously specified under Enclosed Bases.
b. Provide top and bottom framing for each counter food pan, cold pan, coffee urn, ice cream unit, ice bin, dish dispenser, etc., whether a drop-in unit or a cutout for a portable unit.
c. Where plate shelves occur, frame horizontally 8-1/2" back from counter edge or as design dictates, and at bottom of shelf at counteredge.
d. The countertop shall be constructed of #14 gauge stainless steel, as previously specified, with all joints welded, ground and polished.
e. Fronts and exposed ends shall be stainless steel, plastic laminate or other material as noted in the Item Specifications.
f. All display glass shelving shall be 1/4" polished plate glass and fully trimmed with #18 gauge stainless steel formed channels. Top shelves shall be the same width as the shelf below. Shelves shall be supported on 5/8" square, #16 gauge stainless steel perimeter tubing fully welded to 1-1/4" square, #16 gauge stainless steel tubing uprights.
g. Provide appropriate adjustable glass sneeze or breath guards trimmed in stainless steel along front, entire length, mounted in Klein 4465-A brackets.

h. Protector shelf over hot food wells shall be #16 gauge stainless steel supported on 1-1/4" square, #16 gauge stainless steel tubing uprights, with 1/4" polished plate glass front and end panels trimmed in #18 gauge stainless steel channels. When specified for self-service, mount bottom edge of front panel 8" above countertop.
i. All display and protector shelves shall be furnished with full-length fluorescent lights wired to on/off switch in counter apron, with lamps and protective shields. Conceal all wiring in tubular uprights.
j. Refer to Item Specification for changes, as required.
k. Counter shall be internally wired complete by the K.E.C., and in such a way as to meet the requirements of the Electrical Code of the job location.

2.4 EQUIPMENT

A. All items listed on the Contract Documents under the heading "Equipment Schedule" shall be furnished in strict accordance with the foregoing specifications and with the following detailed Itemized Specifications.

B. Manufacturer's names and model numbers are shown establishing quality, size, and finish required, representing the Owner's and Consultant's requirements and basis for bid. Equipment is listed hereinafter with same item numbers as shown on Contract Documents.

PART 3 - EXECUTION

3.1 INSPECTION

A. Before beginning the installation of foodservice equipment, the spaces and existing conditions shall be examined by the K.E.C. and any deficiencies, discrepancies, or unsatisfactory conditions for proper installation of foodservice equipment shall be reported to the Architect in writing.

1. Do not proceed with installation until unsatisfactory conditions have been corrected in a manner satisfactory to the installer.
2. Beginning installation shall constitute acceptance of the area.

3.2 PREPARATION

A. Foodservice equipment drawings are diagrammatic and intended to show layout, arrangement, mechanical and electrical requirements.

B. Field verify all measurements at the building prior to fabrication of custom equipment. Coordinate measurements and dimensions with rough-in and space requirements.

3.3 INSTALLATION

A. The K.E.C. shall coordinate his delivery schedule with the Contractor to ensure adequate openings in the building to receive the equipment.

B. Equipment shall be un-crated, fully assembled and set level in position for final connections. Parts shipped loose but required for connection shall be properly tagged and shall be accompanied by the necessary installation instructions.

C. Provide a competent, experienced foreman to supervise installation and final connections with other trades.

D. Remote Refrigeration Systems:

1. All refrigeration work where applicable to this contract shall be accomplished in an approved manner, using finest quality fittings, controls, valves, etc.
2. Refrigeration items shall be started up, tested, adjusted, and turned over to the Owner in first class condition and left running in accordance with the manufacturer's instructions.
3. Refrigeration lines and hook-ups shall be completed by the K.E.C. with the exception of electric, water, and drain line final connections unless otherwise specified.
4. All copper tubing shall be refrigerant grade A.C.R. or type "L".
5. Silver solder and/or Sil-Fos shall be used for all refrigerant piping. Soft solder is not acceptable.
6. All refrigerant lines in pipe sleeves or conduit shall be effectively caulked at ends to prevent entrance of water or vermin and at penetrations through walls or floors.
7. All tubing shall be securely anchored with clamps, and suspended lines shall be supported with adjustable hangers at 6'-0" o.c. maximum.
8. Wrap drain line in freezer compartment(s) with approved heat-tape for final connection by Electrical Contractor.

E. Sealing and Caulking:

1. Prior to the application of sealant, all surfaces shall be thoroughly cleaned and de-greased.
2. Apply around each unit of permanent installation at all intersections with walls, floors, curbs or other permanent items of equipment.
3. Joints shall be air-tight, water-tight, vermin-proof, and sanitary for cleaning purposes.
4. In general, joints shall be not less than 1/8" wide, with backer rod to shape sealant bead properly at 1/4" depth. Shape exposed surfaces of sealant slightly concave, with edges flush with faces of materials at joint.
5. At internal corner joints, apply sealant or gaskets to form a sanitary cove, of not less than 3/8" radius.
6. Provide sealant-filled joints up to 3/4" in joint width. Trim strips for wider joints shall be set in a bed of sealant and attached with stainless steel fasteners, 48" o.c., or less, to insure suitable fastening and prevent buckling of the metals fastened.

F. Cutting:

1. All cutting, fitting, or patching required during installation shall be accomplished by the K.E.C., at his own expense, so as to make the work conform to the plans and specifications.
2. The K.E.C. shall not cut or otherwise alter, except with the consent of the Owner, the work of any other Contractor.
3. Provide cut-outs in foodservice equipment where required to run plumbing, electric, or steam lines through equipment items for final connections.

3.4 FIELD QUALITY CONTROL

A. Inspection:

1. Provide access to shop fabrication areas during normal working hours to facilitate inspection of the equipment, during construction, by the Architect or his authorized representative.
2. Errors found during these inspections shall be corrected to the extent required within the scope of the plans, specifications, and approved drawings.

B. Start-Up and Testing:

1. Delay start-up of foodservice equipment until service lines have been tested, balanced, and adjusted for pressure, voltage, and similar considerations; and until water and steam lines have been cleaned and treated for sanitation.
2. Before testing, lubricate each equipment item in accordance with manufacturer's recommendations.
3. Supply a trained person or persons who shall start up all equipment, test and make adjustments as necessary, resulting in each item of equipment, including controls and safety devices, performing in accordance with the manufacturer's specifications.
4. All gas-fired equipment shall be checked by the local gas company as to calibration, air adjustments, etc., and adjustments made as required.
5. Repair or replace any equipment found to be defective in its operation, including items which are below capacity or operating with excessive noise or vibration.

C. Demonstration:

1. Provide an operating demonstration of all equipment at a time of Owner's convenience, to be held in the presence of authorized representatives of the Architect and Owner.
2. Provide a follow-up kitchen demonstration three (3) months after the initial demonstration or kitchen opening. K.E.C. to coordinate scheduling with manufacturer’s representatives.
3. Demonstration shall be performed by manufacturer's representative knowledgeable in all aspects of his equipment.
4. During the demonstration, instruct the Owner's operating personnel in the proper operation and maintenance of the equipment.
5. Furnish complete, bound, operation/maintenance manuals and certificates of warranty for all items of equipment provided, in accordance with Article 1.5 Submittals, Paragraph F, at this demonstration time.

3.5 ADJUST AND CLEAN

A. Upon completion of installation and tests, clean and sanitize foodservice equipment, and leave in condition ready for use in food service.

B. Remove all protective coverings, and thoroughly clean equipment both internally and externally.

C. Make and check final adjustments required for proper operation of the equipment.

D. Restore finishes marred during installation to remove abrasions, dents, and other damages. Polish stainless steel surfaces, and touch-up painted surfaces with original paint.

E. Clean up all refuse, rubbish, scrap materials, and debris caused by the work of this Section, and put the site in a neat, orderly, and broom-clean condition.

3.6 ITEMIZED EQUIPMENT

ITEM #1: FLY FAN

QUANTITY: One (1)
MANUFACTURER: Mars Air Doors
MODEL NO.: N248-1UA-OB (N058)
PERTINENT DATA: 48" Long, Wall-Mounted, Stainless Steel
UTILITIES REQ'D: 1/2HP, 120V, 1PH
ALTERNATE MFRS.: Berner

Furnish and install per Equipment Plan, Sheet K-101; Manufacturer's Instructions and the following:

1. Accessories:
   -- Plunger-type micro-switch.

2. Attach to wall with expansion bolts centered over door opening.

ITEM #2: WALK-IN COOLER/FREEZER

QUANTITY: One (1)
MANUFACTURER: Thermo-Kool
MODEL NO.: Indoor Installation (N058)
PERTINENT DATA: 4" Foamed-In-Place Urethane Panels - Class I, NSF Construction
UTILITIES REQ'D: 1500W, 120V, 1PH; 3/4" IW
ALTERNATE MFRS.: Kolpak; Bally; ThermalRite

Furnish and install per Equipment Plan, Sheet K-101; Building Conditions Plan, Sheet K-102; Manufacturer's Shop Drawing and the following:

1. Two Section Unit; 20'-2 1/2" L x 7'-9" D x 8'-6" H. Size width of interiors compartments equally.

2. Exterior Finish:
   -- 26 GA stucco embossed galvanized where unexposed.
   -- 22 GA stucco embossed stainless steel where exposed.

3. Interior Finish:
   -- White .040 stucco embossed aluminum walls.
   -- White acrylic enamel baked-on 26 GA smooth galvanized steel ceiling.

4. Interior Floor:
   -- 4" prefabricated floor panels installed in 6" deep floor recess over hot asphalt paper or 6 MIL polyethylene sheets on building floor slab.
   -- 2" setting bed with two (2) layers of wire reinforcing mesh fabric and quarry tile floor material with 6" high integral coved base, interior and exterior of box, installed over prefabricated floor panel by Contractor.

5. Entrance Door:
   -- Two (2) flush-mounted, self-closing right-hinged doors with 34"x76" net opening.

ITEM #2: (Continued)

- -- Polished chrome camlift hinges with lift-off capability. Provide one (1) extra hinge per door, three (3) total.
- -- Kason #1236 polished chrome lever-action handle with knob-turn release and cylinder lock, each door.
- -- Kason #09440004 polished chrome dead-bolt lock, factory mounted.
- -- Kason #109400003 hydraulic door closer.
- -- Standard 2" diameter dial thermometer factory mounted in door frame.
- -- Foot treadle door opener.
- -- Pilot light and switch assembly factory mounted in door frame with stainless steel coverplate.
- -- 36" high aluminum diamond tread kickplates, interior and exterior, of door, frame and jambs.
- -- 14" x 24" heated observation windows, both doors.
- -- Kason #907 interior door handle, factory mounted with concealed metal backing plate.
- -- Round vinyl door bumper mounted to front exterior face to protect handle from puncturing wall when door in full open position.
- -- 12 gauge stainless steel heated threshold at each entrance door.
- -- Undercut doors for quarry tile floor.
- -- Kason #1806 LED light fixture with high-impact plastic globe factory mounted centered above door opening. Conceal conduit within header of door frame and extend to junction box mounted on top of door panel.
- -- Engraved phenolic plastic compartment sign - 12" long x 2" high; white in color with 1" high blue CAPITAL letters mounted on door above observation window; (1) – FREEZER, (1) COOLER.
- -- Reinforced cooler door panel for air-screen door.
- -- Cool Curtain Clear-Vu Model #SS3678 vinyl swinging curtain factory installed at freezer entrance door.

6. Heated pressure relief port in freezer compartment.

7. Four (4) Kason #1810L21248LB 48" long LED light fixtures with shatter-proof high impact plastic covers centrally-mounted to walk-in ceiling; Two (2) for the freezer, two (2) for the cooler. Fixtures shipped loose and mounted by Contractor; final connection by Contractor. K.E.C. to seal and insulate with silicone sealant all knock-outs in fixture casing to prevent moisture infiltration.

8. Modularm Model #75LC recessed digital thermometer with audio-visual temperature alarm factory mounted in each door frame and inter-wired with building monitoring system by Contractor, as required. Extend temperature probe to rear of compartment mounted at ceiling behind evaporator coil.

9. Provide and install trim strips of matching exterior finish between ends of walk-in panels and building walls from floor to finished ceiling. Contractor to verify ceiling height.

10. Provide and install closure panels of matching exterior finish between top of walk-in and finished ceiling Contractor to verify ceiling height.

11. All electrical conduit shall be run concealed above walk-in ceiling per Detail, Sheet K-104.

12. Evaporator coil drain lines shall be run to floor drain with P-trap on exterior of box by Contractor.

13. Black flexible "Armaflex" insulation applied to exposed drain lines and fittings within interior of box by Contractor.

ITEM #2: (Continued)

14. Spiral heat tape applied to drain line within interior of freezer compartment prior to application of insulation by Contractor. Drain line heating cable shall be installed for continuous 24-hour operation.

15. Coordinate location of sprinkler head drops and provide penetrations, where necessary.

16. Seal and insulate all openings to prevent infiltration of warm air into cooler/freezer compartments.

17. Quality Inspection Requirement:
    -- Walk-In shall be completely erected at the manufacturer's facility prior to shipment and a quality control inspection performed on the assembled structure. A digital photograph of factory assembled walk-in shall be provided for the Contractor permanent records and included in the operation and maintenance manuals.

18. Accessories:
    -- One (1) Mars Air LoPro #LPN36-IU air door curtain factory installed above cooler door with optional on/off microswitch. Contractor to provide power receptacle and final connection. Mount fan centered over walk-in door opening and attach to wall panel with thru-bolts.
    -- #16 ga. stainless steel hat-channel bumper rail with closed ends installed to front face of walk-in, full-length, mounted @ 36" A.F.F. Provide 1/8" diamond tread kickplates from top of finish floor coved base to bottom of bumper rail. Align bumper rail with 36" high aluminum kickplate on doors.
    -- 6" high aluminum cove baseboard, where exposed surfaces at kitchen side. Seal with silicone sealant to finish floor.

ITEM #3: COOLER REFRIGERATION SYSTEM

QUANTITY:	One (1)
MANUFACTURER:	Coldzone
MODEL NO.:	CFO130E4S-E (N058)
PERTINENT DATA:	Uni-Pak, Air Cooled, Outdoor Installation, Remote, With Surveillant Demand Defrost Controller
UTILITIES REQ'D:	8.7A, 208V, 3PH
ALTERNATE MFRS.:	Kolpak; Bally; ThermalRite

Furnish and install per Equipment Plan, Sheet K-101; Manufacturer's Shop Drawing and the following:

1. Condensing Unit: Factory Pre-Assembled, Scroll, Medium Temperature, R-448A.

2. System located outdoors on roof. Curb with pitch-pocket furnished and installed by Contractor. Refer to Mechanical Roof Plan for exact location.

3. Complete winterization package and condensing unit weatherproof cover.

4. Overall size: 28.25" L x 28" W x 19" H.

5. Weight: 195 lbs.

ITEM #3: (Continued)

6. Evaporator Coil with High-Efficiency EC Motors: Low-Profile, End-Mount Type, Model CL6A094ADAEL-; 1.8A, 120V, 1PH
   -- System to operate at +35° F.
   -- Furnished complete with thermostat, solenoid and expansion valves factory mounted ready for final connection by Refrigeration Contractor.
   -- Surveillant Demand Defrost Controller to consist of a microprocessor driven controller that reduces the energy used by the evaporator coil in refrigeration system through precise control of superheat, fan management and demand defrosts, factory-mounted.
   -- Furnish Cat5 cable and interwire to building monitoring system by Contractor.

7. Complete refrigeration system warrantee: five (5) years for the compressor, Two (2) years for the condensing unit, and Two (2) years for all parts of the evaporator coil.

8. Factory installed main-fused disconnect switch.

ITEM #4: FREEZER REFRIGERATION SYSTEM

QUANTITY:	One (1)
MANUFACTURER:	Coldzone
MODEL NO.:	CFO300L4S-E (N058)
PERTINENT DATA:	Uni-Pak, Air Cooled, Outdoor Installation, Remote, With Surveillant Demand Defrost Controller
UTILITIES REQ'D:	10.7A, 208V, 3PH
ALTERNATE MFRS.:	Kolpak; Bally; ThermalRite

Furnish and install per Equipment Plan, Sheet K-101; Manufacturer's Shop Drawing and the following:

1. Condensing Unit: Factory Pre-Assembled, Scroll, Low Temperature, R-448A.

2. System located outdoors on roof. Curb with pitch-pocket furnished and installed by Contractor. Refer to Mechanical Roof Plan for exact location.

3. Complete winterization package and condensing unit weatherproof cover.

4. Overall size: 28.25" L x 40" W x 22" H.

5. Weight: 245 lbs.

6. Evaporator Coil with High-Efficiency EC Motors: Low-Profile, End-Mount Type, Model CL6E077DDAEL, 1.0A, 208V, 1PH (Fan); 9.8A, 208V, 1PH (Defrost Heater)
   -- System to operate at -10° F.
   -- Surveillant Demand Defrost Controller to consist of a microprocessor driven controller that reduces the energy used by the evaporator coil in refrigeration system through precise control of superheat, fan management and demand defrosts, factory-mounted.
   -- Furnish Cat5 cable and interwire to building monitoring system by Contractor.

ITEM #4: (Continued)

7. Complete refrigeration system warrantee: five (5) years for the compressor, Two (2) years for the condensing unit, and Two (2) years for all parts of the evaporator coil.

8. Factory installed main-fused disconnect switch.

ITEM #5: SHELVING, MOBILE

QUANTITY: Thirteen (13)
MANUFACTURER: InterMetro Industries Corporation
MODEL NO.: MetroMax i (N058)
PERTINENT DATA: Open-Grid Shelf Mat, Polymer
UTILITIES REQ'D: ----
ALTERNATE MFRS.: None

Furnish and set-in-place per Equipment Plan, Sheet K-101; Manufacturer's Instructions and the following:

Cooler:

1. Six (6) #MX1836G sections; 18" W x 36" L x 4-tier high.

2. Twenty-four (24) #MX63UP polymer posts for stem casters, 63" high.

3. Twelve (12) #5MPX polyurethane swivel casters with bumpers.

4. Twelve (12) #5MPBX polyurethane swivel casters with brakes and bumpers.

5. Plastic wedge lock connectors, quantity as required.

6. Locate bottom shelf @ 10" A.F.F.; space remaining shelves equally.

Freezer:

1. Seven (7) #MX1836G sections; 18" W x 36" L x 4-tier high.

2. Twenty-eight (28) #MX63UP polymer posts for stem casters, 63" high.

3. Fourteen (14) #5MPX polyurethane swivel casters with bumpers.

4. Fourteen (14) #5MPBX polyurethane swivel casters with brakes and bumpers.

5. Plastic wedge lock connectors, quantity as required.

6. Locate bottom shelf @ 10" A.F.F.; space remaining shelves equally.

ITEM #6: DUNNAGE RACK

QUANTITY: Two (2)
MANUFACTURER: InterMetro Industries Corporation
MODEL NO.: Super Erecta (N058)
PERTINENT DATA: Stationary, With Open Grid Shelf, Wire
UTILITIES REQ'D: ----
ALTERNATE MFRS.: None

Furnish and set-in-place per Equipment Plan, Sheet K-101; Manufacturer's Instructions and the following:

Dry Storage

1. Two (2) #MHP55K3 Metroseal 3™ epoxy-coated shelf units; 24" W x 48" L.

ITEM #7: SHELVING, MOBILE

QUANTITY: Four (4)
MANUFACTURER: InterMetro Industries Corporation
MODEL NO.: MetroMax Q (N058)
PERTINENT DATA: Five-Tier High, Open-Grid Shelf Mat
UTILITIES REQ'D: ----
ALTERNATE MFRS.: None

Furnish and set-in-place per Equipment Plan, Sheet K-101; Manufacturer's Instructions and the following:

Dry Storage:

1. Two (2) #MQ1836G sections; 18" W x 36" L x 5-tier high.

2. Two (2) #MQ1842G sections; 18" W x 42" L x 5-tier high.

3. Sixteen (16) #MQ74UPE posts for stem casters, 74-5/8" high.

4. Eight (8) #5MPX polyurethane swivel casters with bumpers.

5. Eight (8) #5MPBX polyurethane swivel casters with brakes and bumpers.

6. Locate bottom shelf @ 10" A.F.F., space remaining shelves equally.

ITEM # 8: PAN RACK CART, MOBILE

QUANTITY: Two (2)
MANUFACTURER: Cres-Cor
MODEL NO.: 207-UA-13A (N058)
PERTINENT DATA: Universal Angles, Channel Posts, (18) 22x20 Pan Capacity
UTILITIES REQ'D: ----
ALTERNATE MFRS.: Lakeside, InterMetro

ITEM #8: (Continued)

Furnish and set-in-place per Equipment Plan, Sheet K-101, Manufacturer's Instructions and the following:

1. Accessories:
   -- Full perimeter non-marking wrap-around vinyl bumper.
   -- Pan stop.

ITEM #9: UTILITY CART, MOBILE

QUANTITY:	Two (2)
MANUFACTURER:	Lakeside Manufacturing Company, Inc.
MODEL NO.:	544 (N058)
PERTINENT DATA:	700-Lb. Capacity, 21" x 33" Shelf Size, Two-Tier, NSF Version
UTILITIES REQ'D:	----
ALTERNATE MFRS	None

Furnish and set-in-place per Equipment Plan, Sheet K-101; Manufacturer's Instructions and the following:

1. All four (4) casters swivel-type.

ITEM #10: HAND SINK

QUANTITY:	One (1)
MANUFACTURER:	Eagle Foodservice Equipment Co., Inc.
MODEL NO.:	HSAP-14-ADA-FE-B (N058)
PERTINENT DATA:	Wall-Mounted Special Purpose - Hands Free ADA Type
UTILITIES REQ'D:	1/2" HW, 1/2" CW, 1-1/2" W
ALTERNATE MFRS.:	None

Furnish and set-in-place per Equipment Plan, Sheet K-101; Manufacturer's Instructions and the following:

1. Physically challenged unit furnished complete with splash mounted battery-powered electronic-eye faucet with low battery indicator light, basket drain, front loading C-fold paper towel dispenser, deck-mounted soap dispenser, stainless steel skirt and stainless steel wall brackets.

2. Accessories:
   -- Left and right end splashes.
   -- One (1) #326015 temperature adjustment valve.
   -- One (1) #326696 anti-scald valve.

ITEM #11: PREP SINK

QUANTITY: One (1)
MANUFACTURER: Custom Fabricated
MODEL NO: #14 GA Stainless Steel
PERTINENT DATA: 7'-0" Long x 2'-6" Wide x 2'-10" High
UTILITIES REQ'D: 1/2" HW, 1/2" CW, (2) 1-1/2" IW
ALTERNATE MFRS.: None

Fabricate and set-in-place per Equipment Plan, Sheet K-101; Fabrication Detail, Sheet K-501; and the following:

1. Front and right end edge rolls per Detail 1.02B.

2. 13" high back, left and partial right endsplash per Detail 1.04A.

3. Framework per Detail 1.05.

4. Legs per Detail 1.07.

5. Stainless steel undershelf on both ends per Detail 1.11.

6. Full-length stainless steel table-mounted overshelf per Detail 1.12A.

7. Sound-deaden underside of sinks and drainboards with NSF-approved sound dampening material.

8. Accessories:
   -- One (1) T&S #B-0231 backsplash-mounted swing spout faucet with #B-0199-01F-15 flow control aerator.
   -- Two (2) T&S #B-3950-01 twist waste valves with overflow assemblies and #010387-45 basket strainers.

9. Item will remain shrink-wrapped until ready for final connection by Plumbing Contractor. Immediately following completion of final connections, K.E.C. shall re-shrink-wrap tubs or provide removable panel to avoid use by construction trades. Post sign on wall above sink tubs in English and Spanish stating: WARNING! NOT TO BE USED BY CONSTRUCTION TRADES. FAILURE TO COMPLY WILL RESULT IN $500.00 FINE AND ALL COSTS TO REPLACE ITEM WITH NEW.

ITEM #12: WORKTABLE, MOBILE

QUANTITY: One (1)
MANUFACTURER: Custom Fabricated
MODEL NO.: #14 GA Stainless Steel
PERTINENT DATA: 6'-0" Long x 2'-6" Wide x 3'-0" High
UTILITIES REQ'D: ----
ALTERNATE MFRS.: None

Fabricate and set-in-place per Equipment Plan, Sheet K-101; Fabrication Detail, Sheet K-501 and the following:

ITEM #12: (Continued)

1. Perimeter edge rolls per Detail 1.02M.

2. Framework per Detail 1.05.

3. Legs per Detail 1.07.

4. Stainless steel undershelf per Detail 1.11.

5 One (1) stainless steel drawer assembly per Detail 1.14, Type I, with lock.

6. Full-length table-mounted, double-sided utensil rack per Detail 1.18B.

7. Worktable per Detail 2.01.

8. 5" diameter polyurethane swivel casters, all four (4) with brakes.

9. Sound-deaden underside of tabletop with NSF-approved sound dampening material.

ITEM #13: RETRACTABLE CORD REEL

QUANTITY: Four (4)
MANUFACTURER: APC Group Inc.
MODEL NO.: Kitchen Leash #K-100014-D (N058)
PERTINENT DATA: Ceiling-Mounted, With Adjustable Stop, Non-GFI Receptacle
UTILITIES REQ'D: 20.0A, 120V, 1PH
ALTERNATE MFRS.: None

Furnish and install per Equipment Plan, Sheet K-101; Manufacturer's Instructions and the following:

1. Electrical Contractor to furnish and install GFCI type breaker at kitchen electrical panel board.

ITEM #14: UTILITY RACEWAY

QUANTITY: One (1)
MANUFACTURER: Captive-Aire Systems, Inc.
MODEL NO.: UDI (N058)
PERTINENT DATA: Island Type
UTILITIES REQ'D: 50.0A, 120/208V, 3PH; 3/4"HW, 3/4"CW; 1-1/2" Natural Gas @ 975MBH (Looped Service)
ALTERNATE MFRS.: Avtec, Gaylord, Caddy

Furnish and install per Equipment Plan, Sheet K-101; Utility Raceway Details, Sheet K-502; Manufacturer's Instructions and the following:

ITEM #14: (Continued)

1. All components and labor necessary for a complete system manufactured in accordance with NEC latest edition, NEMA, NFPA No. 96 and No. 54, Uniform Plumbing Code, ASME, OSHA using only U.L. Listed certified components.

2. One (1) 7'-6" long, 8" wide x 6'-10" high with risers, completely pre-wired and pre-plumbed to one final connection point for electric, hot water, cold water and gas. All connections shall face down on horizontal member.

3. System shall extend up to bottom edge of Ventilator, Item #15.

4. Raceway height per detail shown on Sheet K-502.

5. Riser size as shown on Detail, Sheet K-502.

6. Entire raceway shall be constructed of #16 gauge Type 304 stainless steel with a #4 mill finish.

7. Removable link plates constructed of #16 gauge stainless steel.

8. Electrical compartment shall be completely enclosed with stainless steel housing accessible by the removal of link plates. Internal electrical feeder shall be cable wireway having balanced load and phases and with connection lugs for main service. Branch circuit wiring for each electrical connection shall be phase identified and sized in accordance with circuit breaker rated capacity. Raceway shall provide electrical, gas and water service for items #16, #17 and #19.

9. Provide 12" long interchangeable 16 gauge stainless steel link connection plate for each electrical connection equipped with individual circuit breaker(s) installed in breaker panel mounted in left-hand riser, and grounding type receptacle with twist-lock feature or pre-wired flexible sealtite conduit.

10. On each connection plate provide U.L. listed GFIC ground fault interrupter circuits and matching power supply cords on each 120-volt single-phase connection.

11. Hot water and cold water plumbing compartment shall be isolated from electrical compartment. All piping and disconnects in system shall be color coded.

12. At each individual gas branch connection, provide 1/4-turn ball valve and 48" long Dormont PVC coated AGA and NSF approved flexible hose with SnapFast quick-disconnect device and double SwivelMAX gas connectors.

13. Provide fire/fuel shut-off for electric equipment per NFPA No. 96. System shall require one final connection by Contractor from fire protection system.

14. All hot and cold water piping, including individual branch pipe connection, shall be hard temper type "L" copper tubing with copper sweat type solder fittings. At each individual connection, provide A.G.A approved flexible hose(s) with two wall brass and stainless steel construction with quick-disconnect fittings.

15. Provide matching cord sets for all electric equipment, seven (7) total.

ITEM #14: (Continued)

16. Neoprene bumper strips, full length.

17. Provide each mobile piece of equipment with an A.G.A. recognized restraining device protecting respective gas disconnect assemblies and connectors.

18. Electronic gas solenoid valve factory installed at each in-coming gas service ready for final connection per local codes by Plumbing Contractor; inter-wired by Electrical Contractor.

19. U.L. listed, solid-state control panel mounted in left hand riser end, with the following integral accessories:
    - -- Ventilator start/stop station with adjustable time-delay to exhaust residual heat.
    - -- Ventilator light switch, pre-wired in 10ft. flexible conduit ready for connection to light junction box in ventilator by Electrical Contractor.

20. Accessories:
    - -- One (1) Everpure #9797-21 Kleen-Steam II single water filter system factory-installed and housed within right-hand riser. Provide one (1) independent pre-piped water line to service points for Item #16: Convection Steamer. Fabricate 18"x18" lexan viewport in riser panel to monitor pressure gauge and filter bowl.
    - -- Watts #LF7R dual check valve for each water drop.

21. Fabricated in four (4) sections, assembled in field to present integral one-piece appearance.

22. Main electrical shunt-type circuit breakers mounted in left-hand riser for 50A, 120/208V, 3PH service.

23. Factory System Design Verification (SDV) shall be performed after all inspections are complete. SDV report shall be available once completed.

24. Raceway shall be of same manufacturer as Ventilator, Item #15.

ITEM #15: VENTILATOR

QUANTITY:	One (1)
MANUFACTURER:	Captive-Aire Systems, Inc.
MODEL NO.:	6630ND-2-PSP-F (N058)
PERTINENT DATA:	Island Configuration Back-to-back, Captrate Solo Filter Type, Perforated Ceiling Make-Up Air Plenum, With Demand Control Ventilation (DCV) System & Fire Protection System
UTILITIES REQ'D:	2,975 CFM Exhaust/ 2,380 CFM Supply (Tempered), 800W, 120V, 1PH (Lights); 20A, 120V, 1PH, 24-Hour Dedicated Service (Fire Protection System)
ALTERNATE MFRS.:	Avtec; Gaylord, Caddy

Furnish and install per Equipment Plan, Sheet K-101; Ventilator Detail Drawing, Sheet K-503; Manufacturer's Instructions and the following:

ITEM #15: (Continued)

1. 5'-6" Wide x 8'-0" Long x 2'-6" High, with bottom edge mounted at 6'-8" A.F.F. Entire unit constructed of 18 GA stainless steel with liquid tight all welded external continuous seams and joints per N.F.P.A. 96, U.L. and State of Delaware Codes.

2. Five (5) U.L. Listed, NSF-Approved, 12"x12" recessed LED light fixtures.

3. Matching stainless steel perimeter closure panels to finished ceiling; K.E.C. to verify ceiling height.

4. Surface fire protection system nozzles and piping to be factory installed, chrome plated or stainless steel where exposed, ready for final connections by fire protection system sub-contractor.

5. Hanger rods and support system from structure above by General Contractor. K.E.C. to coordinate method and location with other trades.

6. Stainless steel hanger brackets.

7. 8" wide stainless steel angle framing and closure panels to accommodate Utility Raceway, Item #14.

8. Full-length, front-mounted completely insulated, perforated stainless steel ceiling-mounted make-up air plenum with integral supply air balancing dampers.

9. Stainless steel U.L. Classified 20" captrate solo grease filters with hook.

10. Semi-concealed stainless steel grease trough sloped to removable grease cups.

11. Factory System Design Verification shall be performed after all inspections are complete. SDV report shall be available once completed.

12. Ventilator shall be of same manufacturer as Utility Raceway, Item #14.

13. Accessories:
    - -- 12" wide utility cabinet mounted on right end of hood section with factory pre-piped Ansul R-102 fire suppression system and Demand Control Ventilation System #DCV1111 with light and fan switches and optional Smart Controls DCV.
    - -- Six-month and twelve-month inspections, servicing, and replacement of components of fire protection system as per NFPA-96 Latest Edition.
    - -- One (1) Ansul Model K01-2 hand-held fire extinguisher, 1.6 gallon, wall-mounted.
    - -- Field wrapper.

ITEM #16: CONVECTION STEAMER

QUANTITY: One (1)
MANUFACTURER: AccuTemp Products, Inc.
MODEL NO.: N61201E060 DBL (N058)
PERTINENT DATA: (2) Double Stacked, Stand-Mounted 6-Pan, Connected Boilerless, Evolution Series
UTILITIES REQ'D: (2)1.0A, 120V, 1PH; (2) 3/4" CW, (2) 3/4" IW; (2)1/2" Natural Gas @ 60 MBH
ALTERNATE MFRS.: None

Furnish and set-in-place per Equipment Plan, Sheet K-101; Manufacturer's Instructions and the following:

1. Accessories:
   -- #SNH-21-01 heavy-duty stainless steel support stand with adjustable bullet feet.
   -- Doors hinged on right.
   -- Auto-fill.

2. Mechanical and electrical services provided thru Utility Raceway, Item #14.

ITEM #17: TILTING KETTLE, 25-GALLON

QUANTITY: One (1)
MANUFACTURER: Cleveland Range, Inc.
MODEL NO.: KGL-25-T (N058)
PERTINENT DATA: Tri-Leg, Self-Contained, 2/3-Jacketed
UTILITIES REQ'D: 5.0A, 120V, 1PH; ½" HW, ½" CW, /2" IW; 3/4" Natural Gas @ 90 MBH
ALTERNATE MFRS.: None

Furnish and set-in-place per Equipment Plan, Sheet K-101; Manufacturer's Instructions and the following:

1. Accessories:
   -- One (1) #CHS25 spring-assisted cover.
   -- One (1) #DPKT double-pantry faucet with swing spout and bracket.
   -- One (1) #MS25 measuring strip.
   -- One (1) #KAK complete kettle accessory kit.
   -- One (1) #FS25 food strainer.
   -- #316G1 316 stainless steel liner.
   -- One (1) #TD2 2" tangent draw-off valve with strainer.
   -- One (1) #PCK pan carrier.

2. Mechanical and electrical services provided thru Utility Raceway, Item #14.

ITEM #18: FLOOR TROUGH

QUANTITY: One (1)
MANUFACTURER: IMC Teddy Foodservice Corporation
MODEL NO.: ASFT2430-SGAS (N058)
PERTINENT DATA: Anti-Spill, 14 GA S/S
UTILITIES REQ'D: 4" W
ALTERNATE MFRS.: Made to Drain

Furnish and install per Equipment Plan, Sheet K-101; Manufacturer's Instructions and the following:

1. 2'-6" long x 2'-0" wide, constructed and installed per Detail, Sheet K-102.

2. SGAS-24 anti-slip stainless steel subway style removable floor grate in equal sections, the lessor of 30 lbs. and/or 20" long.

3. Bottom of trough pitched to integral stainless steel waste cup with removable perforated stainless steel basket.

4. Top of trough installed flush with top of kitchen finished floor.

5. Unit furnished by K.E.C.; installed by Plumbing Contractor.

6. Mechanical and electrical services supplied through Utility Raceway, Item #14.

ITEM #19: CONVECTION OVEN, MOBILE

QUANTITY: Two (2)
MANUFACTURER: Blodgett Oven Company, Inc.
MODEL NO.: DFG-200-ES-DBL (N058)
PERTINENT DATA: Full Size Gas, Deep-Depth, Double Deck
UTILITIES REQ'D: (2)8.0A, 120V, 1PH; 1" Natural Gas @ 100 MBH
ALTERNATE MFRS: Garland

Furnish and set-in-place per Equipment Plan, Sheet K-101, Manufacturer's Instructions and the following:

1. Natural gas fired, pressure regulator as required. Manifold rear gas connection of each oven compartment for single connection point ready for quick disconnect assembly.

2. Stainless steel front, sides, top and back panels.

3. Standard compliment of wire racks, five (5) per section.

4. Doors with dual pane thermal windows and interior light package.

5. Two-speed motors.

6. 5" diameter heavy-duty polyurethane swivel casters, front two (2) with brakes.

7. Cord and plug sets.

ITEM #19: (Continued)

8. Mechanical and electrical services supplied through Utility Raceway, Item #14.

ITEM #20: WORKTABLE, MOBILE

QUANTITY: One (1)
MANUFACTURER: Custom Fabricated
MODEL NO.: #14 GA Stainless Steel
PERTINENT DATA: 7'-0" Long x 2'-6" Wide x 3'-0" High
UTILITIES REQ'D: ----
ALTERNATE MFRS.: None

Fabricate and set-in-place per Equipment Plan, Sheet K-101; Fabrication Detail, Sheet K-501 and the following:

1. Perimeter edge rolls per Detail 1.02M.

2. Framework per Detail 1.05.

3. Legs per Detail 1.07.

4. Stainless steel undershelf per Detail 1.11.

5. Two (2) stainless steel drawer assemblies per Detail 1.14, Type I, with locks.

6. 5" diameter polyurethane swivel casters, all four (4) with brakes.

7. Worktable per Detail 2.01.

8. Sound-deaden underside of tabletop with NSF-approved sound dampening material.

9. Accessories:
   -- One (1) Edlund #S-11 manual can opener mounted on end of table, as shown on plan.

ITEM #21: SLICER

QUANTITY: One (1)
MANUFACTURER: Hobart Corporation
MODEL NO.: HS7-1 (N058)
PERTINENT DATA: Automatic, Variable 4-Speed Carriage Drive, 13" Knife
UTILITIES REQ'D: 1/2 HP, 120V, 1PH
ALTERNATE MFRS.: Bizerba; Globe

Furnish and set-in-place per Equipment Plan, Sheet K-101; Manufacturer's Instructions and the following:

ITEM #21: (Continued)

1. Accessories:
   -- One (1) #HS-FENFUL product fence.
   -- One (1) #HS-CHUTE food chute.
   -- One (1) #HS-AUTOLEGSET 4½" leg set.

2. Cord and plug set.

ITEM #22: FOOD PROCESSOR

QUANTITY: One (1)
MANUFACTURER: Robot Coupe USA, Inc.
MODEL NO.: R-602VV (N058)
PERTINENT DATA: Continuous Feed Hopper, Dual Purpose, Variable Speed, 7-Qt. Bowl
UTILITIES REQ'D: 20.0A, 120V, 1PH
ALTERNATE MFRS.: None

Furnish and set-in-place per Equipment Plan, Sheet K-101, Manufacturer's Instructions and the following:

1. Standard food processor package consisting of: food processor, 7-qt. stainless steel bowl, continuous feed vegetable preparation attachment, (1) #28058 1/8" grating disc and (1) #28064 1/8" slicing disc.

2. Accessories:
   -- #R101230 wall-mount disc rack.
   -- #28101 1/8"x1/8" julienne disc.

3. Cord and plug set.

ITEM #23: MIXER, 20-QUART

QUANTITY: One (1)
MANUFACTURER: Hobart Corporation
MODEL NO.: HL200-1STD (N058)
PERTINENT DATA: Bench Model, Standard Finish with Timer, Legacy Series
UTILITIES REQ'D: 1/2 HP, 120V, 1PH
ALTERNATE MFRS.: None

Furnish and set-in-place per Equipment Plan, Sheet K-101; Manufacturer's Instructions and the following:

1. Pre-configured 120V/1PH mixer with standard accessory package consisting of: 20-qt. stainless steel bowl, 20-qt. aluminum “B” beater and 20-qt. stainless steel “D” wire whip.

2. Accessories:
   -- One (1) #EDDOUGH-ALU20H “ED” Dough Hook.
   -- One (1) #SPLASH-LEX020 lexan splash cover.
   -- One (1) Piper #MX-29-TSS mixer stand with accessory rack, swivel casters and brakes.

ITEM #23: (Continued)

3. Cord and plug set.

ITEM #24: PASS-THRU HEATED CABINET, MOBILE

QUANTITY: Two (2)
MANUFACTURER: Traulsen & Company, Inc.
MODEL NO.: RHF132 WP-HHS/HHG (N058)
PERTINENT DATA: One-Section, Self-Contained, Stainless Steel Exterior/Interior, Spec Line Series, Standard Depth
UTILITIES REQ'D: 7.8A, 120/208V, 1PH
ALTERNATE MFRS.: Victory, True; Continental

Furnish and set-in-place per Equipment Plan, Sheet K-101; Manufacturer's Instructions and the following:

1. Half-height doors hinged per Equipment Plan. Glass doors on kitchen side, solid doors on serving side.

2. Cylinder locks, keyed-alike.

3. #16 gauge stainless steel, universal angle type, bottom support tray slides in lieu of wire shelves installed on 5" centers, five (5) pair per compartment, ten (10) total, each unit.

4. Exterior mounted digital thermometer installed on kitchen side.

5. Plastic laminate finish with stainless trim factory applied to exterior door fronts on serving side only; color as selected by Architect; K.E.C. to verify.

6. 4-5/8" diameter heavy-duty swivel casters, two (2) with brakes.

7. Cord and plug set with matching receptacle furnished and installed by Electrical Contractor.

ITEM #25: PASS-THRU REFRIGERATOR, MOBILE

QUANTITY: Two (2)
MANUFACTURER: Traulsen & Company, Inc.
MODEL NO.: RHT132WPUT-HHG/HHS (N058)
PERTINENT DATA: One-Section, Self-Contained, Stainless Steel Exterior/Interior
UTILITIES REQ'D: 7.2A, 120V, 1PH
ALTERNATE MFRS.: Victory, True; Continental

Furnish and set-in-place per Equipment Plan, Sheet K-101; Manufacturer's Instructions and the following:

1. Half-height doors hinged per Equipment Plan. Glass doors on kitchen side, solid doors on serving side.

2. Cylinder locks, keyed-alike.

ITEM #25: (Continued)

3. No. 1 - #16 gauge stainless steel, angle type, bottom support tray slides in lieu of wire shelves installed on 3" centers, nine (9) pair per compartment, eighteen (18) total, each unit.

4. Exterior mounted digital thermometer installed on kitchen side.

5. Plastic laminate finish with stainless trim factory applied to exterior door fronts on serving side only; color as selected by Architect; K.E.C. to verify.

6. 4-5/8” diameter heavy-duty swivel casters, two (2) with brakes.

7. Cord and plug set.

ITEM #26: HAND SINK

QUANTITY: Four (4)
MANUFACTURER: Eagle Foodservice Equipment Company
MODEL NO.: HSA-10-FAW-LRS (N058)
PERTINENT DATA: Wall Mounted Assembly, With Wrist-Action Handles
UTILITIES REQ'D: 1/2" HW, 1/2" CW, 1-1/2" W
ALTERNATE MFRS.: Advance/Tabco; Select Stainless

Furnish and set-in-place per Equipment Plan, Sheet K-101; Manufacturer's Instructions and the following:

1. Complete sink assembly consisting of: gooseneck faucet, p-trap, tailpiece and basket drain.

2. Accessories:
   -- #606215 skirt assembly.
   -- Left and right end splashes.

ITEM #27: SOAP & TOWEL DISPENSER -- (N.I.K.E.C. – SPECIFIED BY ARCHITECT)

QUANTITY: Four (4)

ITEM #28: WORKTABLE

QUANTITY: One (1)
MANUFACTURER: Custom Fabricated
MODEL NO.: #14 GA Stainless Steel
PERTINENT DATA: 7'-6" Long x 2'-0" Wide x 3'-0" High
UTILITIES REQ'D: ----
ALTERNATE MFRS.: None

Fabricate and set-in-place per Equipment Plan, Sheet K-101; Fabrication Detail, Sheet K-501 and the following:

ITEM #28: (Continued)

1. Front and edge rolls per Detail 1.02M.

2. #14GA one-piece full-length stainless steel top with 2" wide x 6" high integral backsplash. Top to extend through pass-thru window opening, turn-down 4" and back to wall 1". Provide 6" high metal-thickness endsplash on each side of pass-thru opening.

3. Framework per Detail 1.05.

4. Legs per Detail 1.07.

5. Stainless steel undershelf per Detail 1.11.

6. Two (2) stainless steel drawer assemblies per Detail 1.14, Type I, with locks.

7. Worktable per Detail 2.01.

8. Sound-deaden underside of tabletop with NSF-approved sound dampening material.

ITEM #29: ICE MACHINE/BIN

QUANTITY: One (1)
MANUFACTURER: Manitowoc
MODEL NO.: IY-0324A/B-420 (N058)
PERTINENT DATA: Air-Cooled, 350-LB. Maker, 310-LB. Bin, Half-Dice Cube Size
UTILITIES REQ'D: 11.5A, 120V, 1PH; 3/8" CW, ½" IW (Maker Drain), ¾" IW (Bin Drain)
ALTERNATE MFRS.: Ice-O-Matic; Scotsman

Furnish and set-in-place per Equipment Plan, Sheet K-101; Manufacturer's Instructions and the following:

1. Stainless steel exterior finish, ice machine and bin.

2. Accessories:
   -- One (1) Everpure #EV9324-21 InsurIce i2000² Single water filter system with Everpure #EV9534-26 Coarse Filter, mounted on manufacturer’s common wall bracket.
   -- 6" high stainless steel legs with adjustable bullet feet.
   -- Custom fabricated stainless steel ice scoop holder mounted to right-hand side of bin per Detail 6.2.

3. Cord and plug with matching receptacle furnished and installed by Electrical Contractor.

4. Backflow preventor installed on incoming water line by Plumbing Contractor.

ITEM #30: ELECTRONIC MENU BOARD -- (N.I.K.E.C. –FURNISHED BY OWNER)

QUANTITY: Two (2)

ITEM #31: SERVING COUNTER, MOBILE

QUANTITY: One (1)
MANUFACTURER: Shelleysteel by The Delfield Company
MODEL NO.: Modular Stainless Steel Interlocking Sections
PERTINENT DATA: T Shaped Configuration, #14 GA Stainless Steel Tops, One-Piece Continuous Tray Slide, Laminate Front and Exposed Ends
UTILITIES REQ'D: ----
ALTERNATE MFRS.: ColorPoint by Low-Temp Industries

Refer to individual counter components listed under alpha headings for specification.

ITEM #31A: HOT FOOD COUNTER, MOBILE

QUANTITY: Two (2)
MANUFACTURER: Shelleysteel by The Delfield Company
MODEL NO.: SH-5-NU-MOD (N058)
PERTINENT DATA: Electrically Heated, Open Base, Five (5) Wells, With Drains
UTILITIES REQ'D: 40.0A, 120/208V, 1PH; 1/2" HW, 3/4" IW
ALTERNATE MFRS.: ColorPoint by Low-Temp Industries

Furnish and set-in-place per Equipment Plan, Sheet K-101; Manufacturer's Shop Drawing and the following:

1. (B) - 10" wide full-length solid stainless steel tray slide mounted on rigid brackets @ 29" A.F.F.

2. (E) – 6" wide, full-length solid stainless steel fold-down work shelf on server’s side.

3. (G) – Sloped front food protector with fixed tempered glass front and end panels.

4. (F) - Line-up interlocks for counter body and tray slide.

5. Cord and plug set. Double cord hooks on bottom of unit.

6. (P) - Open understorage with bottom stainless steel shelf.

7. (QQ) - Food wells with individual drains and quarter-turn ball valves manifolded to common valve assembly with master shut-off valve housed within counter base located on end with hinged stainless steel access door per Detail, Sheet K-103.

8. (V) - 5” diameter heavy-duty swivel casters, all (4) with brakes. Provide stainless steel caster cradle, Eagle Group #CC-S-2, for each caster, to allow for consistent equipment placement.

9. (M) – Radiant heat lamp with incandescent lights and on/off switch.

10. Standard counter height of 36" A.F.F. Turn end down to align and interlock with adjacent frost top counter.

11. Front panels and exposed end with decorative accent; design and color as selected by Architect, K.E.C. to verify.

ITEM #31A: (Continued)

12. Accessories:
    -- One (1) T&S #B-0207 deck-mounted single pantry fill faucet with swivel nozzle mounted on end opposite solid top counter, each unit.

ITEM #31B: FROST TOP COUNTER, MOBILE

QUANTITY:	Two (2)
MANUFACTURER:	Shelleysteel by The Delfield Company
MODEL NO.:	SCFT-50-NU-MOD (N058)
PERTINENT DATA:	Mechanically Refrigerated, Open Base, With 2-Tier Frost Top Sized for Full Sheet Pan Per Tier
UTILITIES REQ'D:	7A, 120V, 1PH; 3/4" IW
ALTERNATE MFRS.:	ColorPoint by Low-Temp Industries

Furnish and set-in-place per Equipment Plan, Sheet K-101; Manufacturer's Shop Drawing and the following:

1. (B) - 10" wide full-length solid stainless steel tray slide mounted on rigid brackets@ 30" A.F.F.

2. Stainless steel constructed double-tier display shelf to have a tempered glass adjustable food protector.

3. (F) - Line-up interlocks for counter body and tray slide.

4. (P) - Open understorage with bottom stainless steel shelf.

5. Modify length of frost top and food protector to provide an opening adjacent to Item #31A: Hot Food Counter for clear passage of 12"x20" tray.

6. Modified counter height set @ 30" A.F.F.

7. (V) - 5” diameter heavy-duty swivel casters, all (4) with brakes. Provide stainless steel caster cradle, Eagle Group #CC-S-2, for each caster, to allow for consistent equipment placement.

8 Cord and plug set. Double cord hooks on bottom of unit.

9. Provide drain line less shut-off valve. Plumber to extend copper drain line to nearest floor sink.

10. Front panels and exposed end with decorative accent; design and color as selected by Architect, K.E.C. to verify.

ITEM #31C: SOLID TOP COUNTER, MOBILE

QUANTITY: Two (2)
MANUFACTURER: Shelleysteel by The Delfield Company
MODEL NO.: SC-30-NU-MOD (N058)
PERTINENT DATA: Open Base, 28" Long
UTILITIES REQ'D: ----
ALTERNATE MFR.: ColorPoint by Low-Temp Industries

Furnish and set-in-place per Equipment Plan, Sheet K-101; Manufacturer's Shop Drawing and the following:

1. (B) - 10" wide full-length solid stainless steel tray slide mounted @ 29" A.F.F.

2. (F) - Line-up interlocks for counter body and tray slide.

3. Cord and plug set. Double cord hooks on bottom of unit.

4. Provide cut-out in top for Item #32: Ice Cream Merchandiser. Counter base shall have isolated compressor housing with louvered stainless steel removable access panel and remote on/off compressor switch, operator’s side.

5. Open understorage with bottom stainless steel shelf.

6. Modified counter height set @ 30" A.F.F.

7. (V) - 5” diameter heavy-duty swivel casters, all (4) with brakes. Provide stainless steel caster cradle, Eagle Group #CC-S-2, for each caster, to allow for consistent equipment placement.

8. Front panels with decorative accent; design and color as selected by Architect, K.E.C. to verify.

ITEM #31D: SOLID TOP COUNTER, MOBILE

QUANTITY: One (1)
MANUFACTURER: Shelleysteel by The Delfield Company
MODEL NO.: SC-60-NU-MOD (N058)
PERTINENT DATA: Open Base, 60" Long
UTILITIES REQ'D: ----
ALTERNATE MFR.: ColorPoint by Low-Temp Industries

Furnish and set-in-place per Equipment Plan, Sheet K-101; Manufacturer's Shop Drawing and the following:

1. (F) - Line-up interlocks for counter body and tray slide.

2. Open understorage with bottom and intermediate stainless steel shelf.

3. Modified counter height set @ 30" A.F.F.

ITEM #31E: CASHIER STAND, MOBILE

QUANTITY: Two (2)
MANUFACTURER: Shelleysteel by The Delfield Company
MODEL NO.: SCS-30-NU-MOD (N058)
PERTINENT DATA: Open Base, 30" Long
UTILITIES REQ'D: 15A, 120V, 1PH (Dedicated Circuit)
ALTERNATE MFR.: ColorPoint by Low-Temp Industries

Furnish and set-in-place per Equipment Plan, Sheet K-101; Manufacturer's Shop Drawing and the following:

1. (B) - 10" wide full-length solid stainless steel tray slide mounted on rigid brackets at 29” A.F.F.

2. (F) - Line-up interlocks for counter body and tray slide.

3. (Q) –15-amp convenience outlet mounted below top in counter body. Provide die-raised opening in top for power cord access.

4. Cashier's utility drawer with locking provision mounted on end.

5. Cord and plug set. Double cord hooks on bottom of unit.

6. Standard counter working height of 36" A.F.F. Turn top down to align & interlock with adjacent solid top counter.

7. (V) - 5” diameter heavy-duty swivel casters, all (4) with brakes. Provide stainless steel caster cradle, Eagle Group #CC-S-2, for each caster, to allow for consistent equipment placement.

8. Front panels with decorative accent; design and color as selected by Architect, K.E.C. to verify.

ITEM #32: DROP-IN ICE CREAM MERCHANDISER

QUANTITY: Two (2)
MANUFACTURER: Silver King
MODEL NO.: SKED123-TL-1-BA1 (N058)
PERTINENT DATA: Drop-In, Hinged Lid
UTILITIES REQ'D: 2.1A, 120V, 1PH
ALTERNATE MFRS.: ColorPoint by Low-Temp Industries

Furnish and set-in-place per Equipment Plan, Sheet K-101; Manufacturer's Instructions and the following:

1. Accessories:
   -- #10315-08 lock bar kit, each unit.

2. Cord and plug set.

ITEM #33: CASH REGISTER -- (N.I.C. - FURNISHED BY OWNER)

QUANTITY: Two (2)

ITEM #34: MILK COOLER, MOBILE

QUANTITY: Two (2)
MANUFACTURER: Beverage-Air
MODEL NO.: SMF34Y-1-S (N058)
PERTINENT DATA: 34" Wide, Single-Access, 8-Case Capacity, SMF Series
UTILITIES REQ'D: 4.2A, 120V, 1PH
ALTERNATE MFRS.: True; Traulsen; Continental

Furnish and set-in-place per Equipment Plan, Sheet K-101; Manufacturer's Instructions and the following:

1. Stainless steel exterior and interior.

2. Cord and plug set.

3. Swivel casters.

4. Accessories:
   -- One (1) #00C01-012A-01 corner bumper kits.

ITEM #35: TRAY/FLATWARE DISPENSER, MOBILE

QUANTITY: Two (2)
MANUFACTURER: Steril-Sil
MODEL NO.: E1-CRT36-3TP1V (N058)
PERTINENT DATA: 150-Tray Capacity, Stainless Steel Construction, Pan & Silverware Cylinder Combination Dispenser, Enclosed Base
UTILITIES REQ'D: ----
ALTERNATE MFRS.: None

Furnish and set-in-place per Equipment Plan, Sheet K-101; Manufacturer's Instructions and the following:

1. Accessories:
   -- Round corner bumpers.
   -- 5" diameter polyurethane swivel casters, two (2) with brakes.
   -- #RP-25-W plastic flatware cylinders, (6) total.
   -- #E1 dispensing cart which holds (1) 12"x20" full-size hotel pan on the left and (1) #E1-BS-60E-W drop-in silverware basket on the right.
   -- Three (3) 1/3 size hotel pans, 4” deep.

ITEM #36: CONDIMENT COUNTER, MOBILE

QUANTITY: One (1)
MANUFACTURER: Shelleysteel by The Delfield Company
MODEL NO.: SC-60-NU-MOD (N058)
PERTINENT DATA: 60" Long
UTILITIES REQ'D: ----
ALTERNATE MFRS.: Colorpoint by Low Temp Industries, Inc.

Furnish and set-in-place per Equipment Plan, Sheet K-101; Manufacturer's Shop Drawing and the following:

1. (B) - 10" wide full length solid stainless steel tray slide mounted on fold-down brackets @ 28" A.F.F., both sides.

2. (P) - enclosed understorage base with #16 gauge bottom stainless steel shelf and stainless steel sliding doors with laminate finish and lock.

3. Modified counter height set @ 30" A.F.F.

4. 5" diameter heavy-duty swivel casters, all four (4) with brakes.

5. Front panels with decorative accent; design and color as selected by Architect, K.E.C. to verify.

ITEM #37: POT WASHING SINK/SOILED DISHTABLE

QUANTITY: One (1)
MANUFACTURER: Custom Fabricated
MODEL NO.: #14 GA Stainless Steel
PERTINENT DATA: U-Shaped: 12'-10" x 9'-0" x 5'-6"± Long x 2'-6" Wide x 2'-10" High
UTILITIES REQ'D: 1/2" HW, 1/2" CW, 1-1/2" IW
ALTERNATE MFRS.: None

Fabricate and set-in-place per Equipment Plan, Sheet K-101; Fabrication Detail, Sheet K-501 and the following:

<u>Pot Washing Sink:</u>

1. Front and right end edge rolls per Detail 1.02B.

2. 13" high back and partial right end splash per Detail 1.04A.

3. Framework per Detail 1.05.

4. Legs per Detail 1.07.

5. Crossbracing per Detail 1.10.

6. Stainless steel undershelf on both ends per Detail 1.11.

ITEM #37: (Continued)

7. Pot sink and drainboards per Detail 3.01.

8. Sound-deaden underside of sinks and drainboards with NSF-approved sound dampening material.

9. Accessories:
   -- Three (3) T&S #B-290 backsplash mounted swing spout faucets.
   -- Four (4) T&S #B-3950-01 twist handle drains with rear-connected over-flows, handle bracket and basket strainer.

10. Item will remain shrink-wrapped until ready for final connection by Plumbing Contractor. Immediately following completion of final connections, K.E.C. shall re-shrink-wrap tubs or provide removable panel to avoid use by construction trades. Post sign on wall above sink tubs in English and Spanish stating: WARNING! NOT TO BE USED BY CONSTRUCTION TRADES. FAILURE TO COMPLY WILL RESULT IN $500.00 FINE AND ALL COSTS TO REPLACE ITEM WITH NEW.

Soiled Dishtable:

1. Front edge roll per Detail 1.02B.

2. 13" high backsplash per Detail 1.04A.

3. Framework per Detail 1.05.

4. Legs per Detail 1.07.

5. Crossbracing per Detail 1.10.

6. Soiled dishtable per Detail 2.02.

7. Table trough at entrance to dishmachine per Detail 2.03.

8. Weld collar adaptor to underside of sink for disposer, Item #40.

9. Stainless steel disposer control panel bracket.

10. 20" wide x 8" deep integral pre-rinse sink with one-piece removable stainless steel rack slide formed of 2" x 1" channels joined by 1" x 1" cross-channels mounted flush with tabletop on 2" x 1" x 3/8" thick welded tab supports.

11. Provide stainless steel crossrails under pass-thru window for storage of 20" x 20" dish/glass racks.

12. Sound-deaden underside of sink and drainboard with NSF-approved sound dampening material.

13. Accessories:
   -- One (1) Fisher#2980 hose reel assembly mounted on wall with bottom of spray head @ 6'-0" A.F.F. when in fully retracted position.
   -- One (1) Aquatrol Model #1801 recessed stainless steel control cabinet with valves, gauges, fittings and components for a complete system.

ITEM #38: ROLLING DOOR -- (N.I.K.E.C. - SPECIFIED BY ARCHITECT)

QUANTITY: One (1)

ITEM #39: TRASH CONTAINER, MOBILE

QUANTITY: Two (2)
MANUFACTURER: Rubbermaid Commercial Products, Inc.
MODEL NO.: FG263200GRAY (N058)
PERTINENT DATA: 32-Gallon Capacity
UTILITIES REQ'D: ----
ALTERNATE MFRS.: None

Furnish and set-in-place per Equipment Plan, Sheet K-101; Manufacturer's Instructions and the following:

1. Accessories:
   -- Two (2) #FG263100GRAY matching flat lids.
   -- Two (2) #FG264000BLA conversion dollies.

ITEM #40: DISPOSER

QUANTITY: One (1)
MANUFACTURER: In-Sink-Erator
MODEL NO.: SS-200-7-AS101 (N058)
PERTINENT DATA: #7 Collar Adapter Assembly
UTILITIES REQ'D: 2 HP, 480V, 3PH; 1/2" CW, 2" W
ALTERNATE MFRS.: Salvajor

Furnish and install per Equipment Plan, Sheet K-101; Manufacturer's Instructions and the following:

1. Aqua saver control center mounted on 14 GA stainless steel bracket.

2. Weld No.7 disposer collar adapter to underside of pre-rinse sink, Item #37.

3. Accessories:
   -- One (1) T&S #B-455 vacuum breaker in lieu of standard unit.

ITEM #41: CONDENSATE HOOD

QUANTITY: One (1)
MANUFACTURER: Captive-Aire Systems, Inc.
MODEL NO: 4830VHB-G (N058)
PERTINENT DATA: Stainless Steel, Exhaust Only Canopy
UTILITIES REQ'D: 1,050 CFM; 3/4" IW
ALTERNATE MFRS.: Avtec; Gaylord; Caddy

Fabricate and install per Equipment Plan, Sheet K-101; Canopy Details, Sheet K-503; and the following:

ITEM #41: (Continued)

1. 7'-0" wide x 4'-0" long x 2'-6" high with bottom edge mounted at 6'-8" A.F.F. Entire unit constructed of 18 GA type 304 stainless steel with #4 finish on all exposed surfaces.

2. 2" wide full perimeter integral gutter with 1/2" turn-up and 3/4" stainless steel drain connection.

3. Five (5) U.L. Listed, NSF-Approved, 12"x12" recessed LED light fixtures.

4. Integral stainless steel rod hanger brackets, each corner.

5. Stainless steel duct tap collar with removable aluminum mesh filter.

6. Stainless steel perimeter closure panels to finished ceiling by K.E.C.; verify ceiling height.

7. Accessories:
   -- #18-gauge stainless steel wall flashing full length of hood to extend from top of finish floor coved base up to bottom edge of hood body. Attach to wall with non-exposed fasteners and seal with clear silicone sealant.

ITEM #42: DISHMACHINE

QUANTITY: One (1)
MANUFACTURER: Hobart Corporation
MODEL NO: CL44EN-BAS+BUILDUP (N058)
PERTINENT DATA: Fully Automatic Rack-Type, Power Wash, 180° F Final Rinse
UTILITIES REQ'D: 27.9A, 480V, 3PH; ½"HW 2"IW
ALTERNATE MFRS.: Meiko

Furnish and set-in-place per Equipment Plan, Sheet K-101; Manufacturer's Instructions and the following:

1. Soap dispensing system and rinse additive system by soap chemical vendor.

2. Stainless steel feet, frame, legs and front panel.

3. Common drain manifold and tank fill.

4. Automatic fill with safety switch at drain valve handle.

5. Energy savings auto-timer control package with table-limit switch.

6. Electric tank heat.

7. Right-to-left operation.

8. Vent fan control.

9. Accessories:
   -- One (1) #CL44E-HTE15K electric tank heat 15kW.
   -- One (1) #CL44E-DIR0RL right to left operation.

ITEM #42: (Continued)

-- One (1) #EXTHD/E-DOM E-series extended hood dom.
-- Six (6) #DISHRAK-PEG20 peg racks.
-- Four (4) #DISHRAK-COM20 combination racks.
-- Two (2) #SHTPAN-RACK rack, 6 sheet pans.
-- One (1) #PRESREG-1/20BR ½" brass pressure regulator.
-- One (1) #1/2INSHK-ABSRBR water shock absorber kit.
-- One (1) #CLE/TBL-SWITCH table LMT switch CLE-Series.
-- One (1) #CURTAIN-KITHTS KIT CURT'N SPLASH HTS E-SERIES.
-- One (1) #DWTCLE drain water tempering kit.
-- One (1) #HTG6HI stainless steel frame with 6" extended height chamber.

ITEM #43: BOOSTER HEATER

QUANTITY: One (1)
MANUFACTURER: Hatco
MODEL NO.: PMG-100 (N058)
PERTINENT DATA: Powermite Series, Gas, 4.75-Gallon Storage Capacity
UTILITIES REQ'D: .36KW, 120V, 1PH; ¾" HW, 2" W; 3/4" Natural Gas @ 105MBH
ALTERNATE MFRS.: None

Furnish and install per Equipment Plan, Sheet K-101; Manufacturer's Instructions and the following:

1. Basic heater consisting of: stainless steel tank, temperature/pressure relief valve, pressure reducing valve, (2) temperature pressure gauges, low-water cut-off, and blended phosphate water treatment system.

2. Accessories:
   --- One (1) #SSBB-100 stainless steel body and base
   -- One (1) #QSSSA-LEGS 6" stainless steel adjustable legs.
   -- One (1) #QSBPRV back pressure relief valve.
   -- One (1) #PMG-AI air interlock switch.
   -- One (1) #QSPRVB brass pressure reducing valve with by-pass.

ITEM #44: CLEAN DISHTABLE

QUANTITY: One (1)
MANUFACTURER: Custom Fabricated
MODEL NO.: #14 GA Stainless Steel
PERTINENT DATA: 7'-0"± Long x 2'-6" Wide x 2'-10" High
UTILITIES REQ'D: ----
ALTERNATE MFR.: None

Fabricate and set-in-place per Equipment Plan, Sheet K-101; Fabrication Detail, Sheet K-501; and the following:

1. Front and left end edge roll per Detail 1.02B.

ITEM #44: (Continued)

2. 13" high backsplash per Detail 1.04A.

3. Framework per Detail 1.05.

4. Legs per Detail 1.07.

5. Stainless steel undershelf per Detail 1.11.

6. Dishtable per Detail 2.02.

7. Sound-deaden underside of drainboard with NSF-approved sound-dampening material.

8. Install table-limit switch (supplied with Dishmachine, Item #42) in end of dishtable; inter-wired by Electrical Contractor.

ITEM #45: POT & PAN SHELVING, MOBILE

QUANTITY:	One (1)
MANUFACTURER:	InterMetro Industries Corporation
MODEL NO.:	MetroMax (N058)
PERTINENT DATA:	Four-Tier High, 24" Wide, Open-Shelf Mat, Polymer
UTILITIES REQ'D:	----
ALTERNATE MFR.:	None

Furnish and set-in-place per Equipment Plan, Sheet K-101; Manufacturer's Instructions and the following:

1. One (1) #MX2448G section; 24" W x 48" L x 4-tier high.

2. Four (4) #MX63UP polymer posts, 63" high.

3. Two (2) #5MPX polyurethane swivel casters with bumpers.

4. Two (2) #5MPBX polyurethane swivel casters with brakes and bumpers.

5. Plastic wedge lock connectors, quantity as required.

6. Locate bottom shelf @ 12" A.F.F.; space remaining shelves equally.

7. Accessories:
   -- One (1) #MTR2448XE tray drying rack.
   -- Five (5) #MXD24-8 shelf dividers.

ITEM #46: MOP SINK & RACK

QUANTITY: One (1)
MANUFACTURER: Eagle Group
MODEL NO.: F1916 (N058)
PERTINENT DATA: Floor Mounted, Standard Unit
UTILITIES REQ'D: 1/2" HW, 1/2" CW, 2" W
ALTERNATE MFRS.: IMC/Teddy; Advance Tabco

Furnish and set-in-place per Equipment Plan, Sheet K-101; Manufacturer's Instructions and the following:

1. Accessories:
   -- One (1) #312689 hose and bracket assembly, 30" long.
   -- One (1) #312690 service sink wall faucet.
   -- One (1) #321561 mop holder with four (4) individual rubber holders.

ITEM #47: SHELVING

QUANTITY: One (1)
MANUFACTURER: InterMetro Industries Corporation
MODEL NO.: Super Erecta (N058)
PERTINENT DATA: Four-Tier High, Stationary, Free-Standing, Chrome-Plated, Wire
UTILITIES REQ'D: ----
ALTERNATE MFR.: None

Furnish and set-in-place per Equipment Plan, Sheet K-101; Manufacturer's Instructions and the following:

Soap Storage:

1. One (1) #1848NC section; 18" W x 48" L x 5-tier high.

2. Four (4) #74P chrome-plated posts; 62-7/16" high.

3. Plastic split sleeves, quantity as required.

4. Locate bottom shelf @ 12" A.F.F.; space remaining shelves equally.

ITEM #48: STACKED WASHER/DRYER -- (N.I.K.E.C. – SPECIFIED BY ARCHITECT)

QUANTITY: One (1)

(END OF FOODSERVICE ITEMIZED SPECIFICATIONS)

STANDARD DETAILS

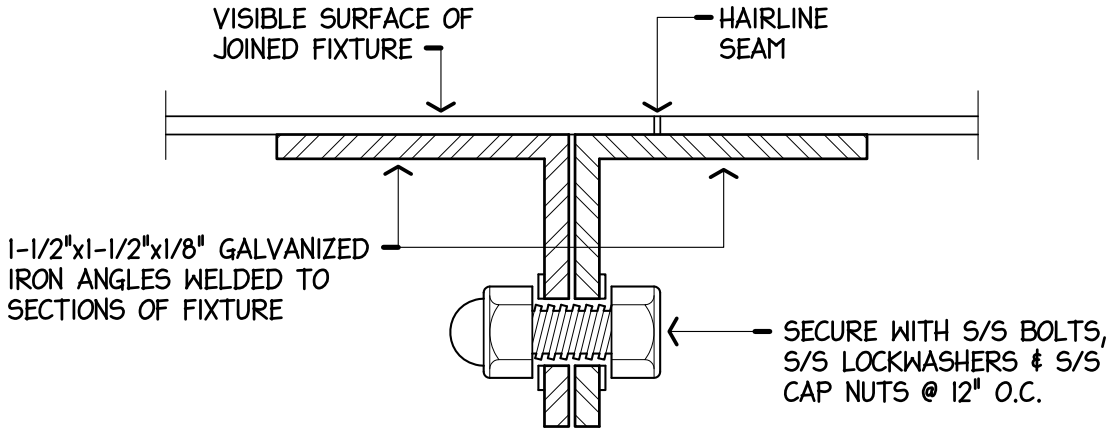

NOTE! JOINED SECTIONS SHALL BE DRAWN TOGETHER LEAVING ONLY A HAIRLINE SEAM.

A. BOLT DRAWN JOINT

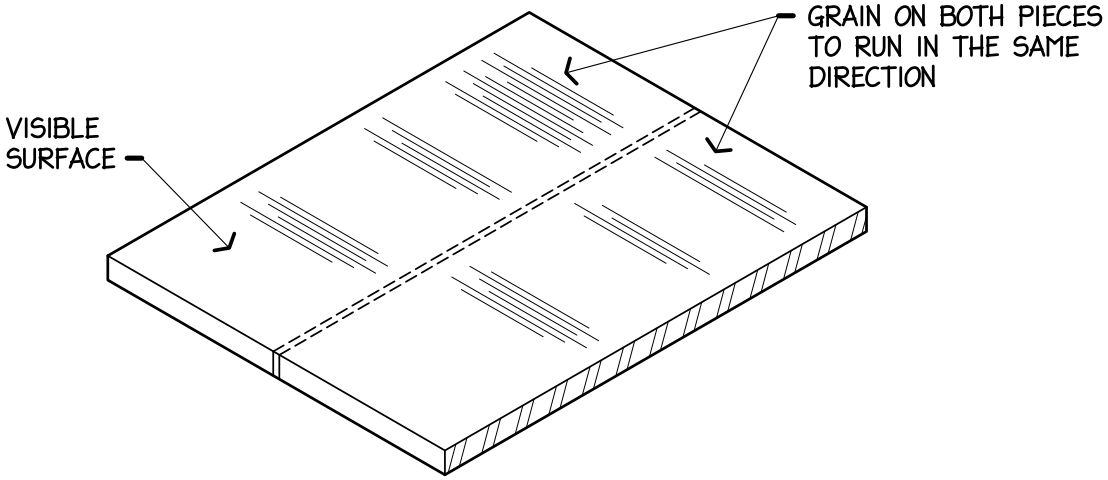

NOTE! ON FIXTURES SPECIFIED WITH WELDED FIELD JOINTS, WELDS SHALL BE CONTINUOUS, GROUND & POLISHED LEAVING NO VISIBLE EVIDENCE OF WELD.

B. WELDED BUTT JOINT

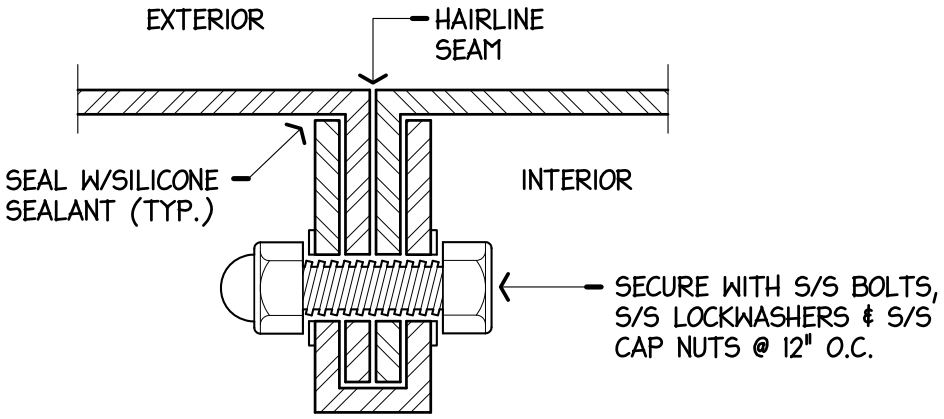

NOTE! JOINED SECTIONS SHALL BE DRAWN TOGETHER LEAVING ONLY A HAIRLINE SEAM.

C. RAISED CAP SEAM - KNUCKLE JOINT

NYIKOS ASSOCIATES, INC. Food Facilities Design/Consulting	DESCRIPTION: FIELD JOINTS & ASSEMBLY	STANDARD DTL: 1.01 PAGE: 114000-61

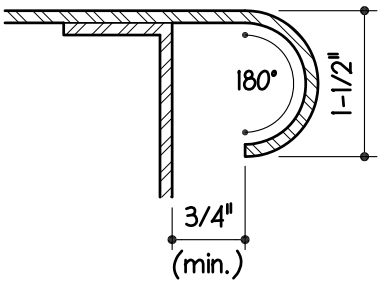

ROLLED A.

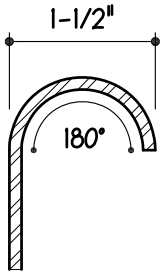

RAISED ROLLED B.

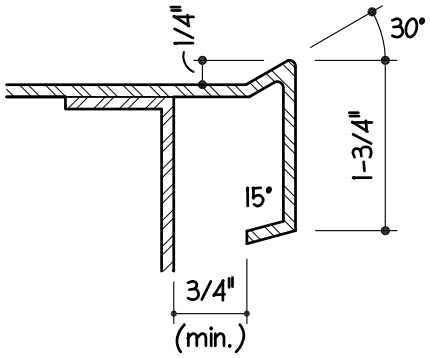

INVERTED "V" EDGE C.

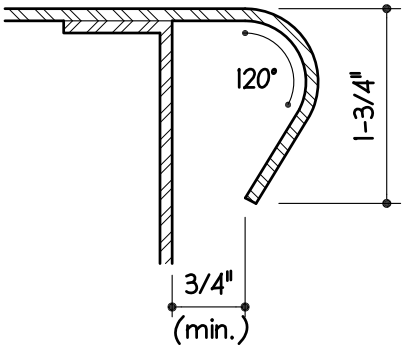

BULL NOSE ROLLED D.

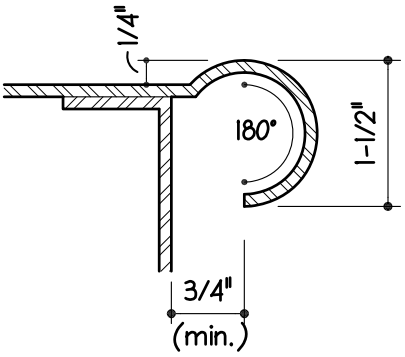

MARINE EDGE E.

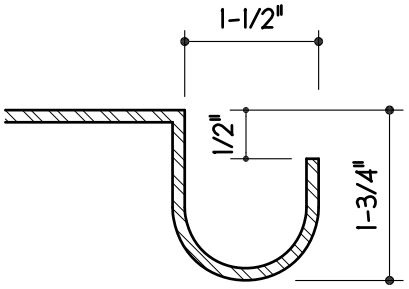

FLOUR GUTTER F.

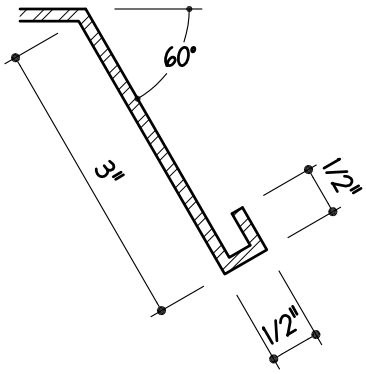

RECIPE CARD HOLDER G.

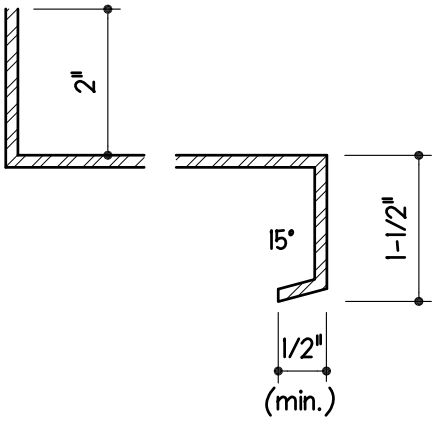

UNDERSHELF EDGE H.

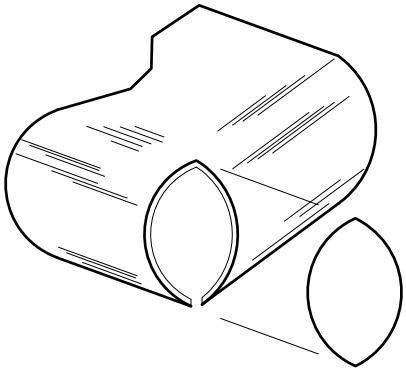

BULL NOSE CORNER I.

NYIKOS ASSOCIATES, INC. Food Facilities Design/Consulting	DESCRIPTION: EDGES	STANDARD DTL: 1.02 PAGE: 114000-62

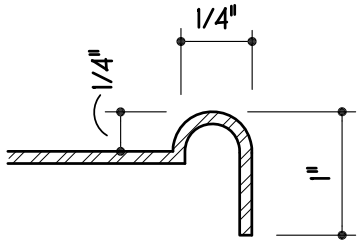

RAISED OPENING EDGE J.

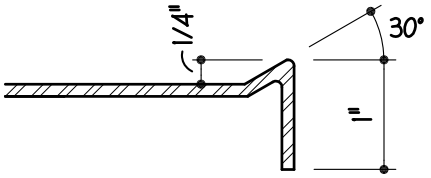

RAISED OPENING EDGE K.

a. AS SPECIFIED. TO MATCH ADJACENT ROLLED EDGES

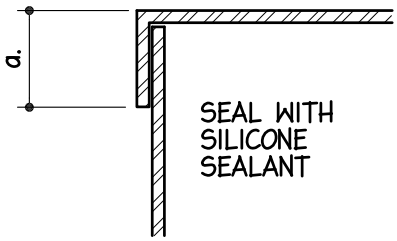

STRAIGHT TURN DOWN L.

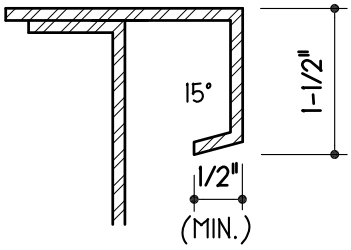

TURNED DOWN EDGE M.

NYIKOS ASSOCIATES, INC.
Food Facilities Design/Consulting

DESCRIPTION:

EDGES

STANDARD DTL: 1.02.1

PAGE: 114000-63

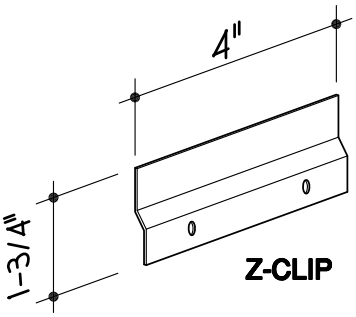

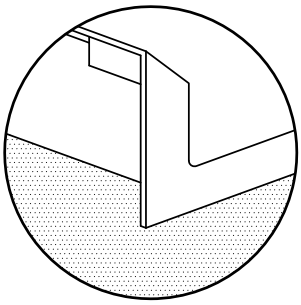

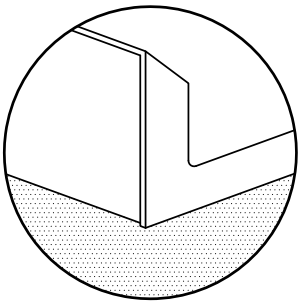

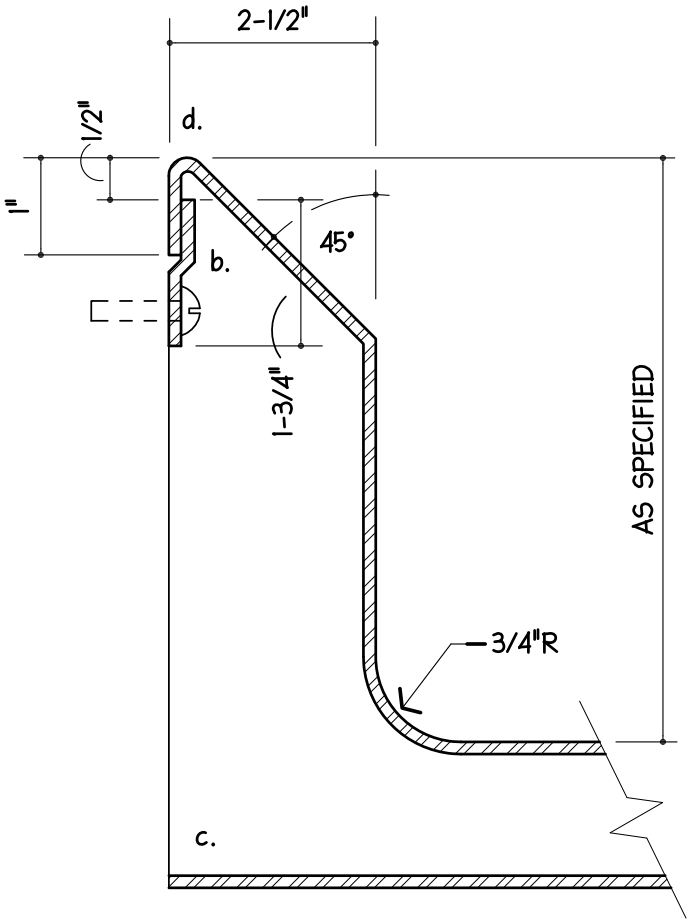

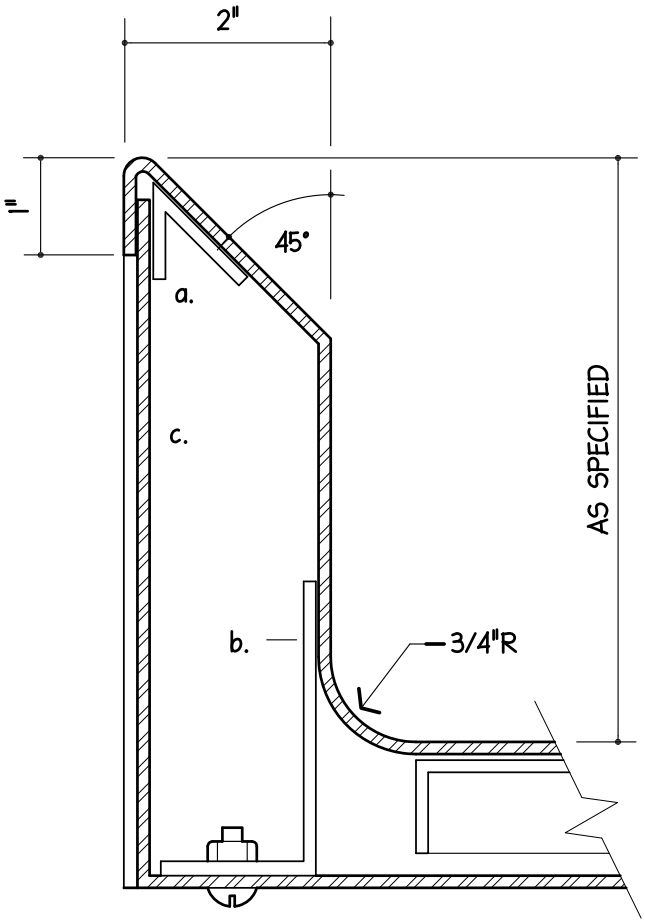

WALL UNIT

DETAIL A

a. 2-1/2" AT SINK TO ALLOW FOR CONNECTED OVERFLOW

b. 12 GA. S/S CLIPS, 4" LONG, FASTENED TO EACH WALL END OF EACH UNIT ¢ 4'-0" ON CENTER. SECURE TO WALL W/A MINIMUM OF TWO 1/4"x20 S/S TOGGLE BOLTS OR EXPANSION SHIELDS.

c. EXPOSED ENDS TO BE FULLY WELDED CLOSED.

d. SEAL ALL AROUND TO WALL WITH SILICONE SEALANT.

FREE STANDING UNIT

DETAIL B

a. 1"x1"x14 GA. S/S x1-1/2"LONG RETAINING CLIP WELDED IN PLACE. ONE AT EACH END OF UNIT AND 12" ON CENTER.

b. 2-1/2"x1-1/2x1-1/2" 14 GA.S/S CLIP WELDED TO SPLASH. ONE AT OF EACH UNIT ¢ 12" ON CENTER.

c. 14 GA S/S PANEL SECURED TO CLIPS W/ S/S OVALHEAD BOLT. WELD NUT TO CLIP.

d. EXPOSED ENDS TO BE FULLY WELDED.

NYIKOS ASSOCIATES, INC. Food Facilities Design/Consulting	DESCRIPTION: BACKSPLASHES	STANDARD DTL: 1.04 PAGE: 114000-64

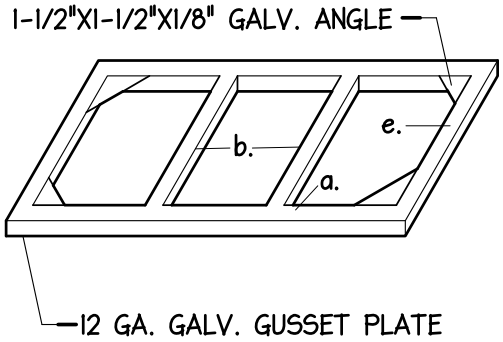

TABLES

A.

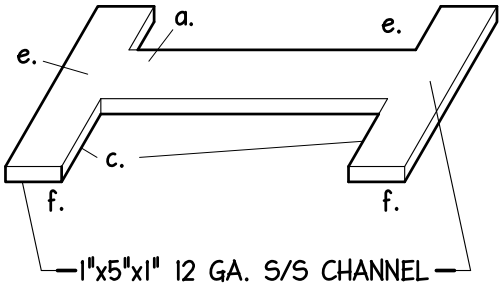

DISHTABLES

B.

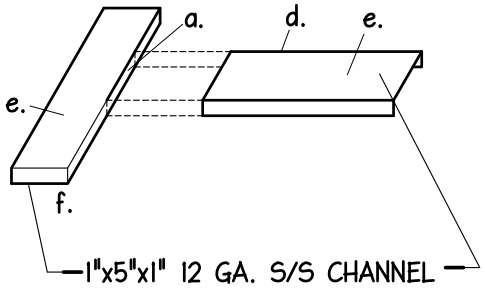

SINK DRAINBOARDS

C.

a. FULLY WELDED CONSTRUCTION.

b. ANGLE LOCATION - ENDS; SIDES OF TOP INSETS; INTERMEDIATES 24" ON CENTER.

c. CHANNEL LOCATION - ENDS AND INTERMEDIATE MAXIMUM 6'-6" O.C.

d. ADD CENTER CHANNEL WHEN DRAINBOARD LENGHT EXCEEDS 5'-6".

e. SECURE TOP TO FRAMEWORK WITH WELDED STUDS, S/S LOCKWASHERS AND CAP NUTS.

f. CLOSE CHANNEL AT FRONT ONLY.

NYIKOS ASSOCIATES, INC. Food Facilities Design/Consulting	DESCRIPTION: TABLE & DRAINBOARD FRAMEWORK	STANDARD DTL: 1.05 PAGE: 114000-65

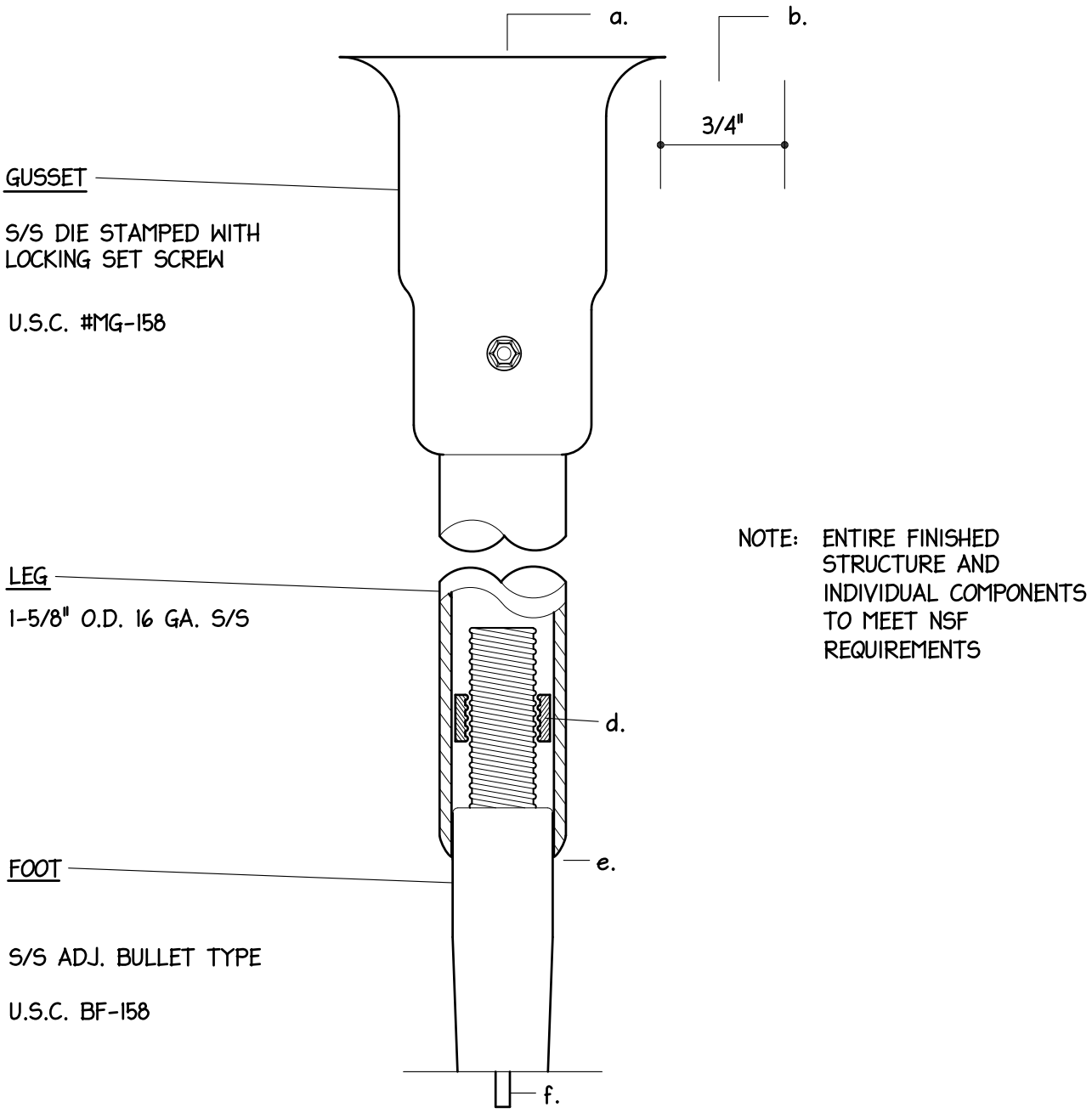

a. FULLY WELD GUSSET TO FRAMEWORK OR SINK

b. 3/4" MINIMUM CLEARANCE ALL AROUND

c. SET SCREW NOT VISIBLE TO WORKING SIDE OF EQUIPMENT.

d. MAXIMUM 1/32" CLEARANCE BETWEEN LEG AND FOOT

e. FOOT SET AT MIDPOINT TO ALLOW 1" ADJUSTMENT UP AND 1" DOWN. WITHOUT THREAD EXPOSURE.

f. LEGS UNSUPPORTED LATERALLY BY CROSSBACKING OR UNDERSHELVES SHALL BE PINNED TO FLOOR USING 1/4" DIA. X 1/2" PINS WELDED TO FOOT AND SET IN MATCHING HOLES IN THE FLOOR.

NYIKOS ASSOCIATES, INC. Food Facilities Design/Consulting	DESCRIPTION: TABLE & SINK LEGS	STANDARD DTL: 1.07 PAGE: 114000-66

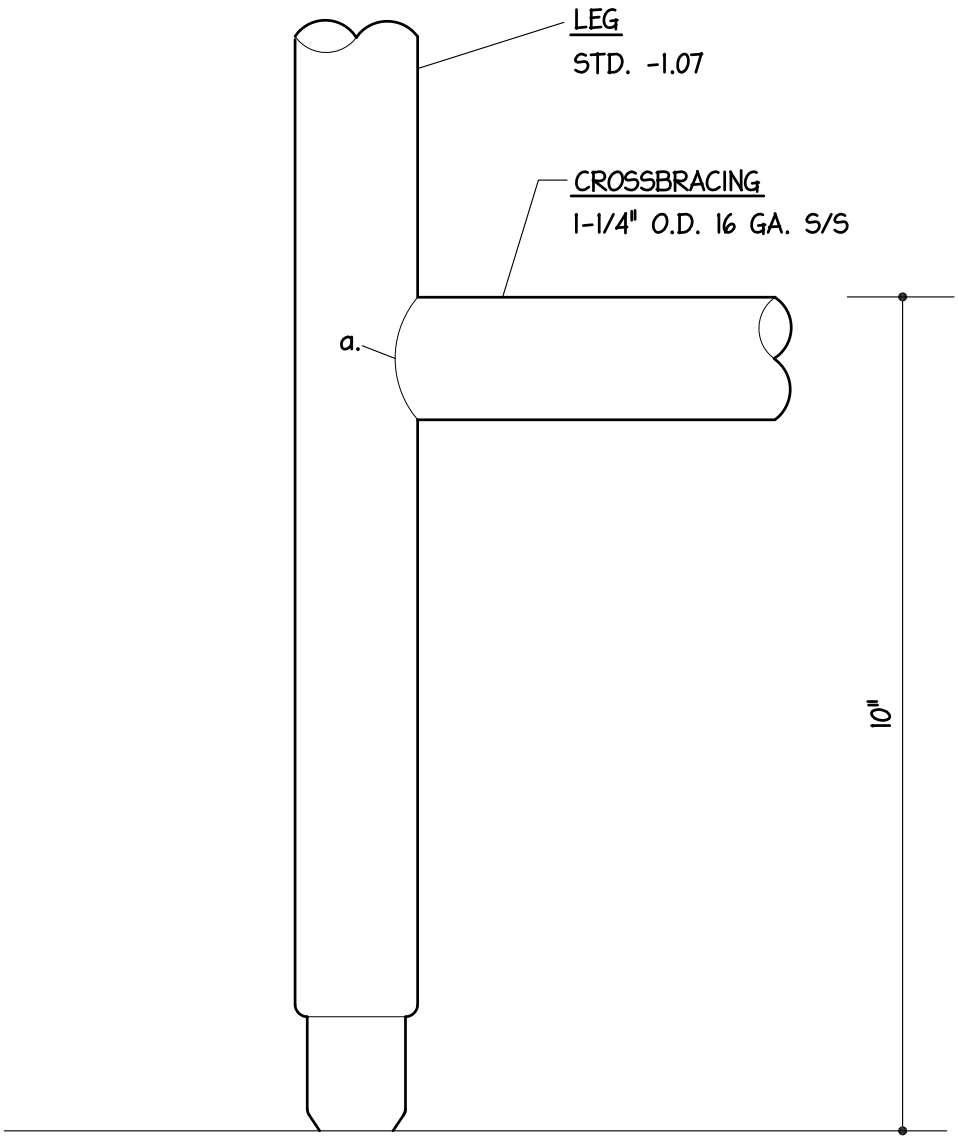

a. FULLY WELD, GRIND SMOOTH AND POLISH.

NYIKOS ASSOCIATES, INC. Food Facilities Design/Consulting	DESCRIPTION: CROSSBRACING	STANDARD DTL: 1.10 PAGE: 114000-67

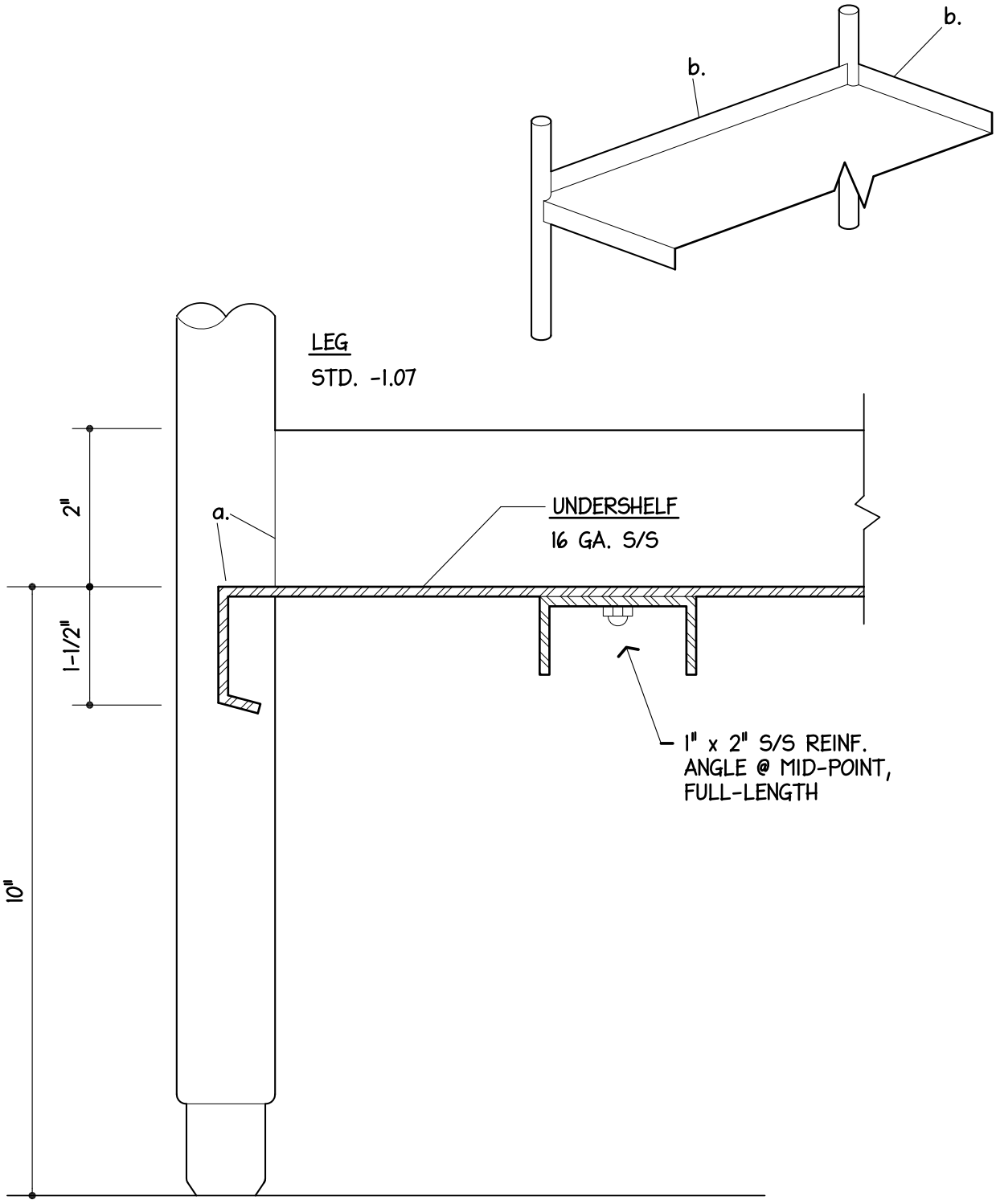

a. FULLY WELD, GRIND SMOOTH AND POLISH.

b. WHEN SPECIFIED, TURN REAR AND ENDS UP 2".

NYIKOS ASSOCIATES, INC. Food Facilities Design/Consulting	DESCRIPTION: UNDERSHELF	STANDARD DTL: 1.11 PAGE: 114000-68

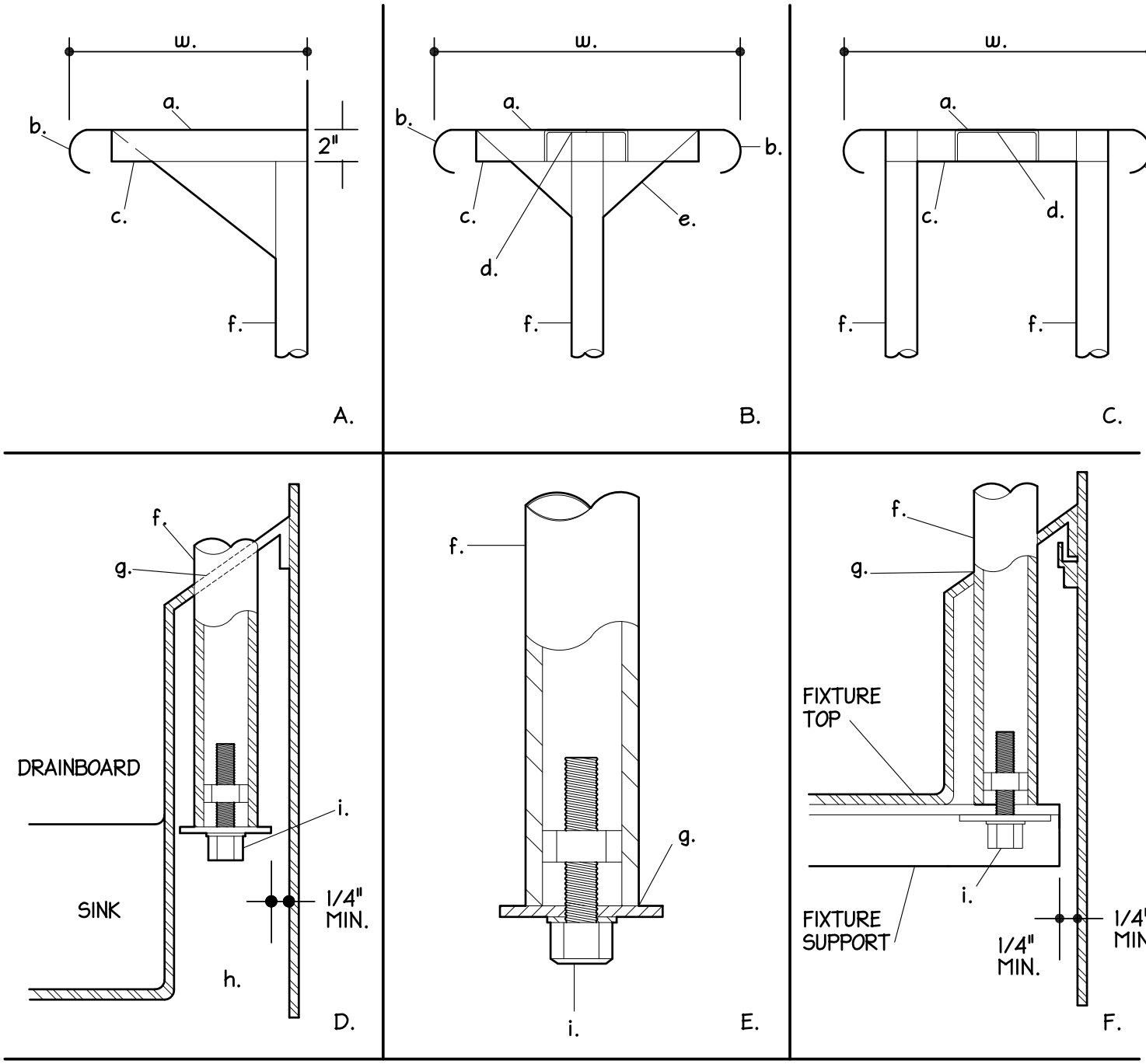

a. 16 GA S/S SHELF

b. STD.- 1.02 EDGE

c. 1"x 3"x 1" 14 GA. S/S CROSS CHANEL

d. 1'x 3"x 1" 14 GA. S/S LENGTHWISE CHANNEL WHEN LENGTH BETWEEN SUPPORTS EXCEEDS 42"

e. 14 GA. S/S BRACKETS FULLY WELDED TO SUPPORT AND CHANNEL..

f. 1-1/4" O.D. 16 GA. S/S UPRIGHT. MAXIMUM 5'-0" ON CENTER.

g. TIGHT FIT. SEAL WITH SILICONE SEALANT.

h. 1-1/2"x 1-1/2" 12 GA. S/S CLIPS WELDED TO REAR OF SPLASH AT DRAINBOARD HEIGHT.

i. 3/8"x 16 S.S. HEX HEAD BOLT, S/S NUT & S/S LOCKWASHER. NUT WELDED IN TUBE.

w. WIDTH AS SPECIFIED.

NYIKOS ASSOCIATES, INC. Food Facilities Design/Consulting	DESCRIPTION: **OVERSHELVES & SUPPORTS**	STANDARD DTL: **1.12** PAGE: **114000-69**

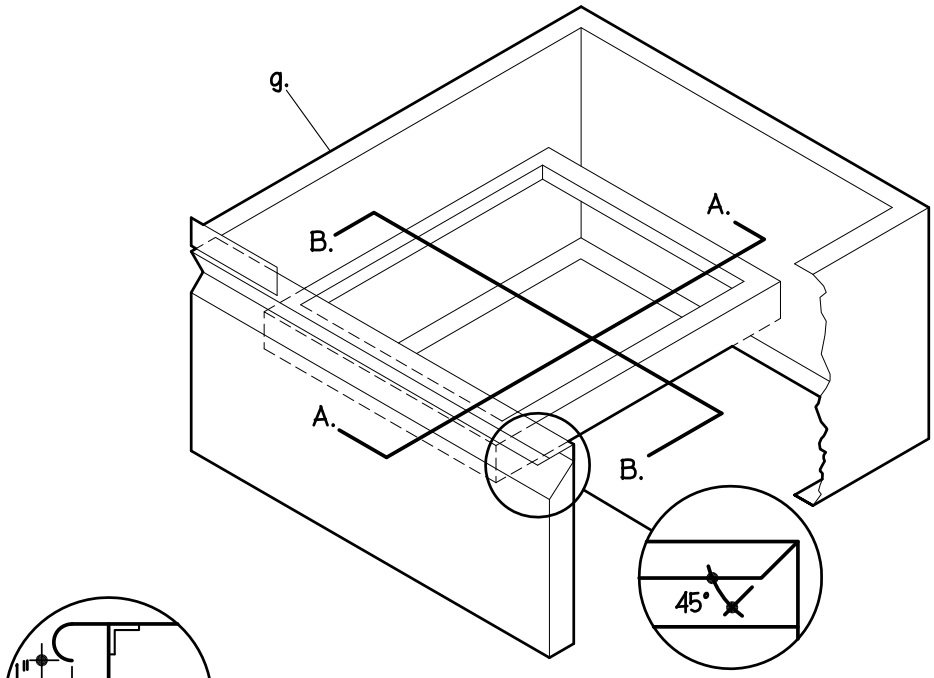

e. 16 GA. S/S ALL WELDED.

f. 3 PIECE SELF CLOSING DWR. SLIDE AS MFD. BY COMPONENT HARDWARE, S52 SERIES WITH S/S ROLLER BEARINGS. PITCH SLIDE DOWNWARD 3/8" PER FOOT FOR SELF-CLOSING ACTION.

g. 18 GA. S/S DWR. ENCLOSURE. ALL WELDED.

h. SEMI - RIGID FIBERGLASS SOUND DAMPENING.

j. HARD RUBBER DRAWER BUMPER EACH CORNER.

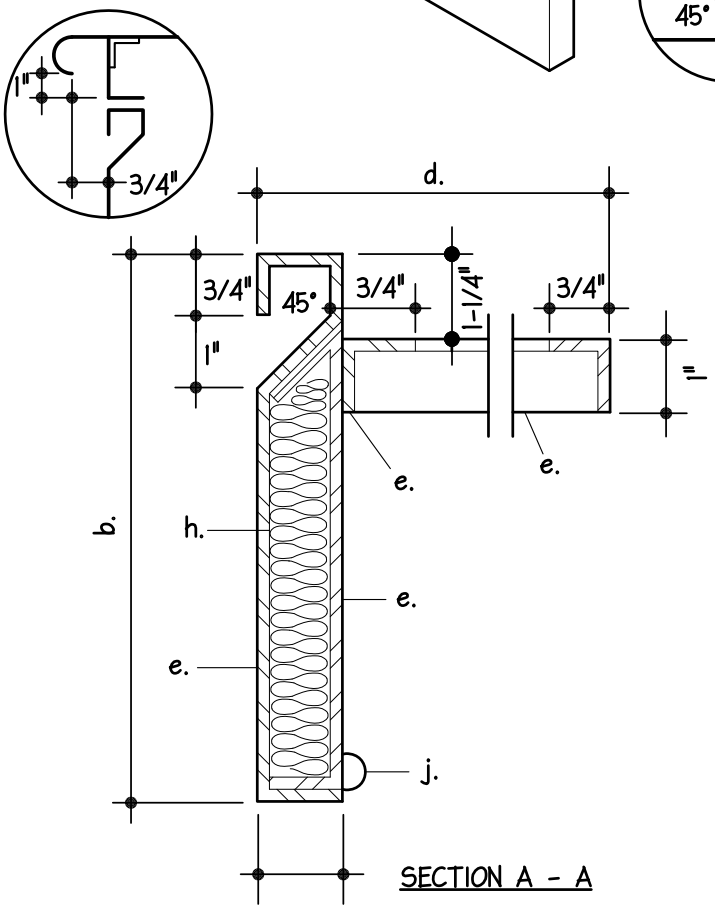

SECTION A - A

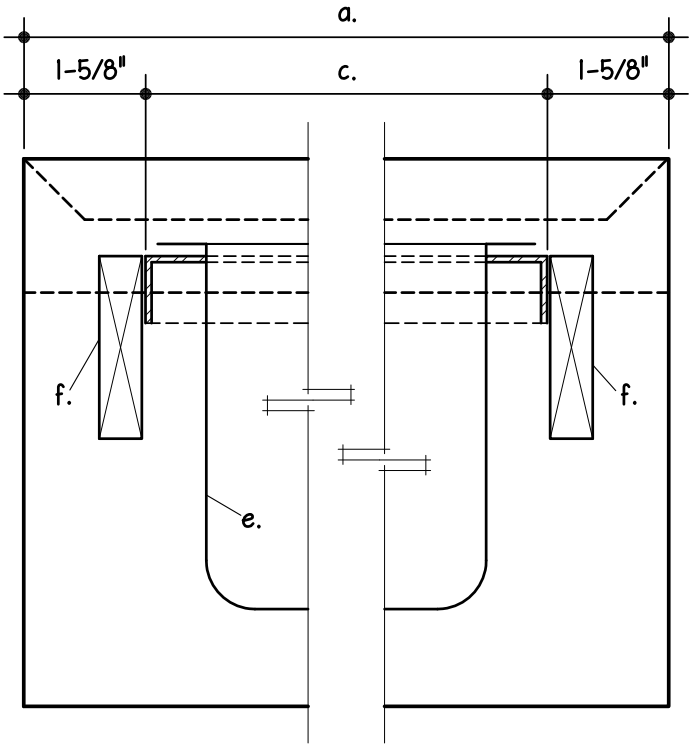

SECTION B -B

i. PROVIDE DIE - STAMPED #18 GA. S/S DWR. PANS AS FOLLOWS:

TYPE	NO.	PANS	a.	b.	c.	d.
I	1	20x20x5 DP.	25	7-1/2	21-3/4	22-3/4
II	1	20x20x8 DP.	25	10-1/2	21-3/4	22-3/4
III	1	12x20x4 DP.	25	6-1/2	21-3/4	14-1/2
IV	2	12x20x4 DP.	28	6-1/2	26-1/4	22-1/2
V	1	12x20x4 DP.	17	13-1/2	13-1/2	22-1/2

NYIKOS ASSOCIATES, INC.
Food Facilities Design/Consulting

DESCRIPTION: DRAWERS

STANDARD DTL: 1.14

PAGE: 114000-70

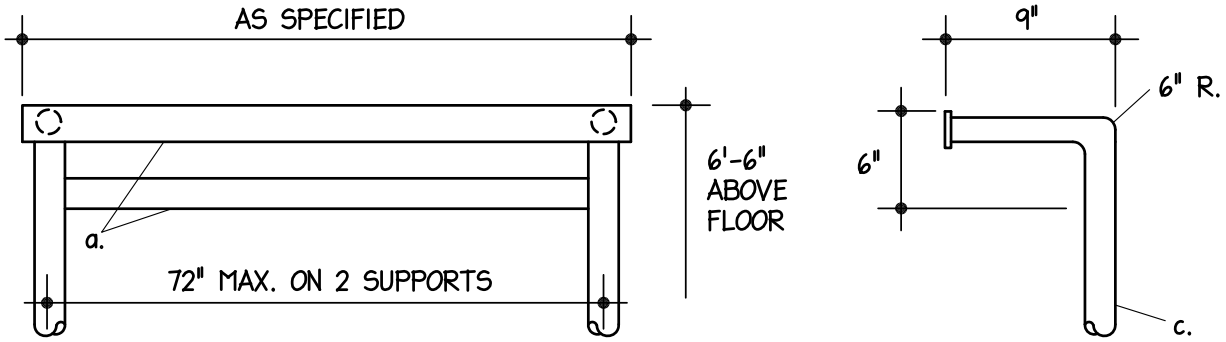

TABLE MTD. SINGLE SIDE a.

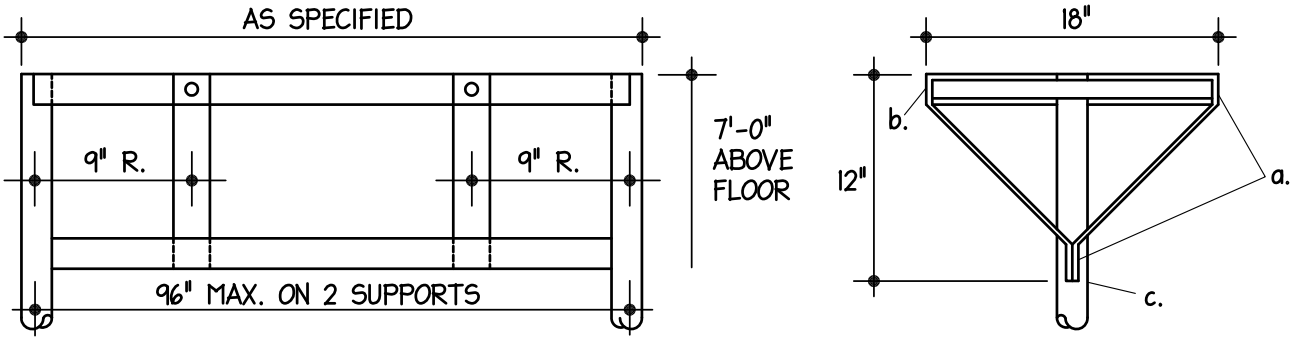

TABLE MTD. DOUBLE SIDE b.

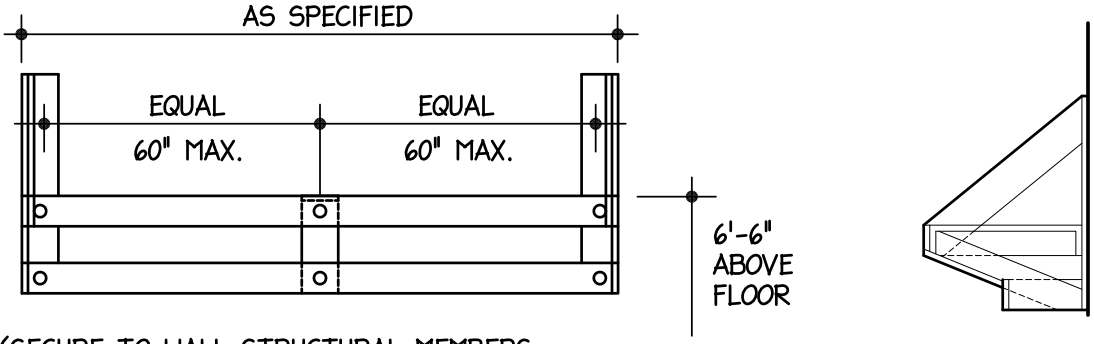

(SECURE TO WALL STRUCTURAL MEMBERS
WITH S/S BOLTS)

WALL MOUNTED c.

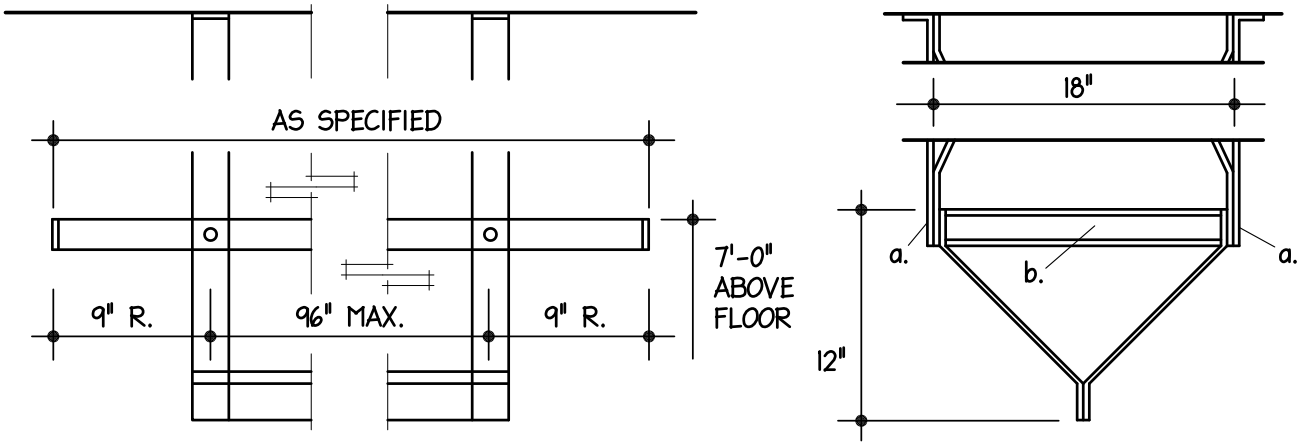

CEILING MOUNTED d.

RACKS TO BE ALL WELDED CONSTRUCTION, GROUND SMOOTH AND POLISHED

a. BANDS - 1/4"x2 S/S BAR.
b. SPREADERS - 1" O.D. 16 GA. S/S.
c. UPRIGHTS - 1-5/8" O.D. 16 GA. S/S.
d. HOOKS - S/S DOUBLE PRONG SNAP-OVER STANDARD KEIL - #1576-1010-1351, 6" O/C.

NYIKOS ASSOCIATES, INC. Food Facilities Design/Consulting	DESCRIPTION: POT RACKS	STANDARD DTL: 1.18 PAGE: 114000-71

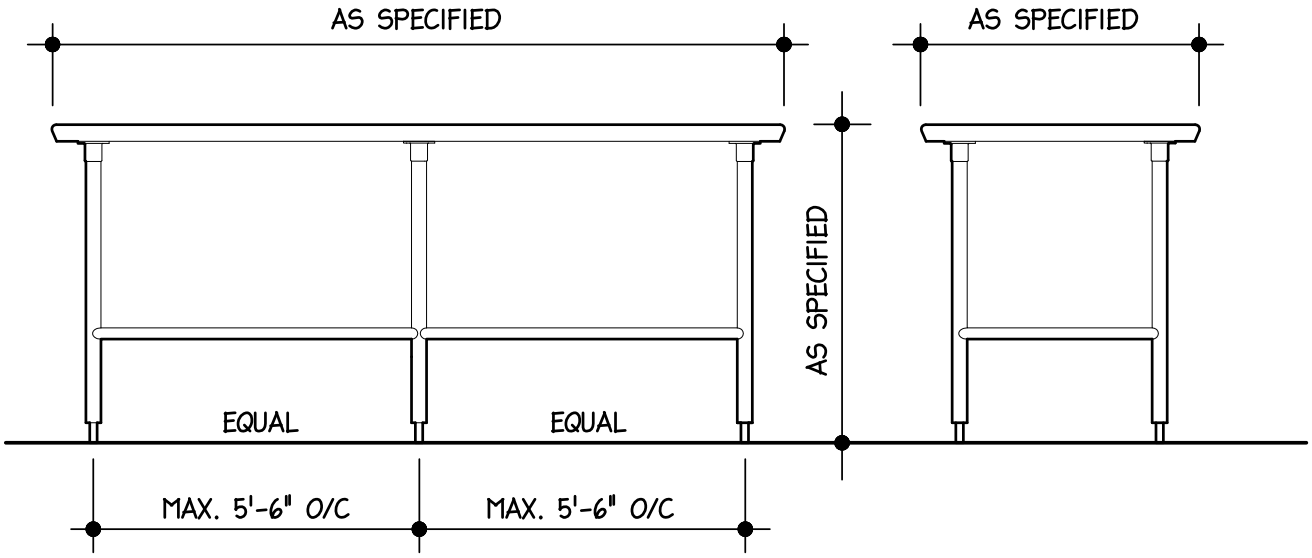

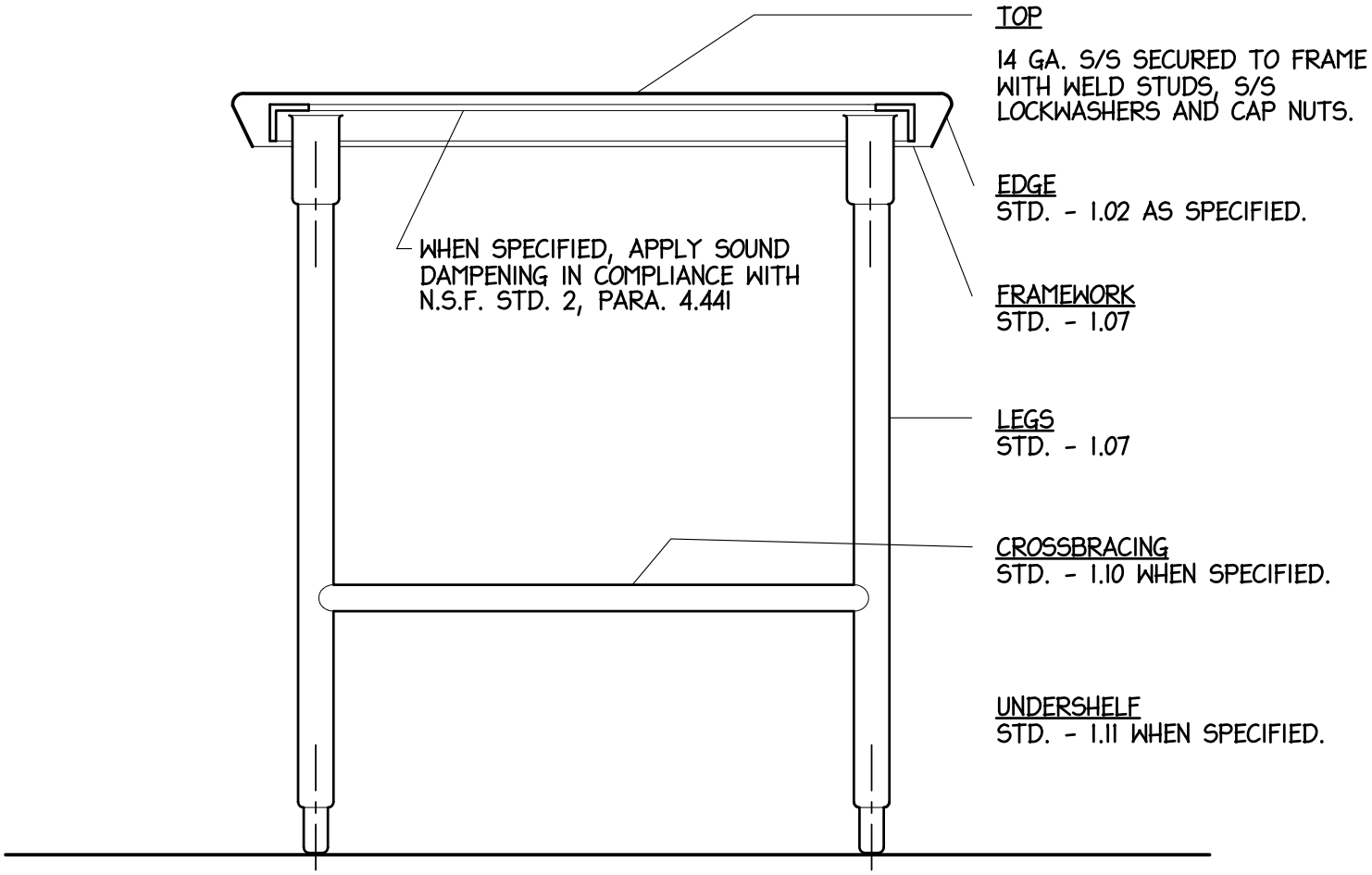

NYIKOS ASSOCIATES, INC. Food Facilities Design/Consulting	DESCRIPTION: **WORKTABLE**	STANDARD DTL: **2.01** PAGE: **114000-72**

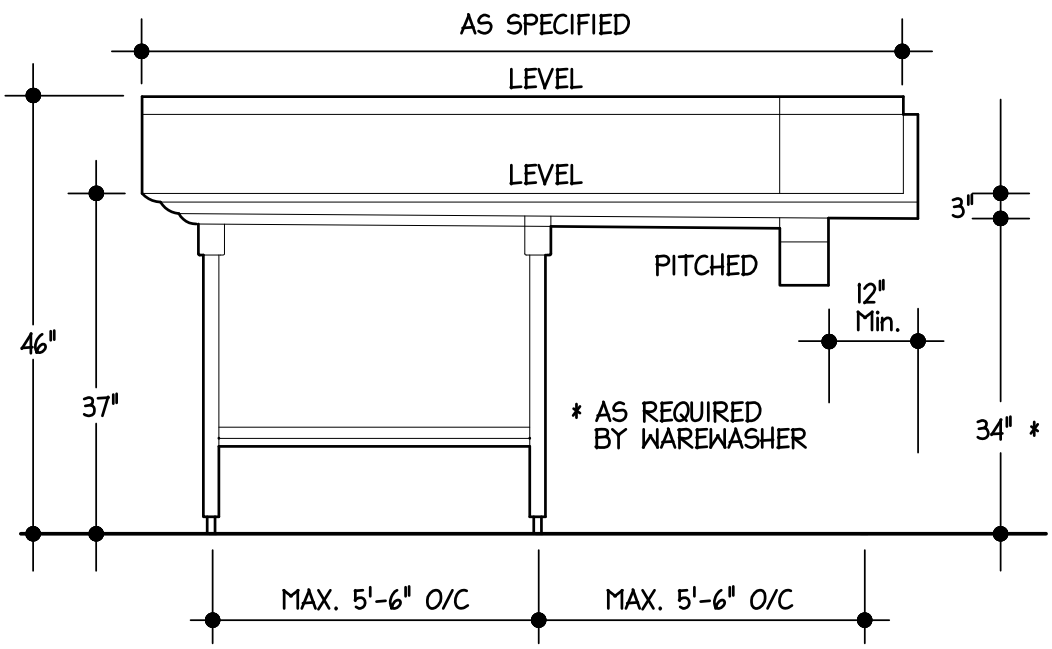

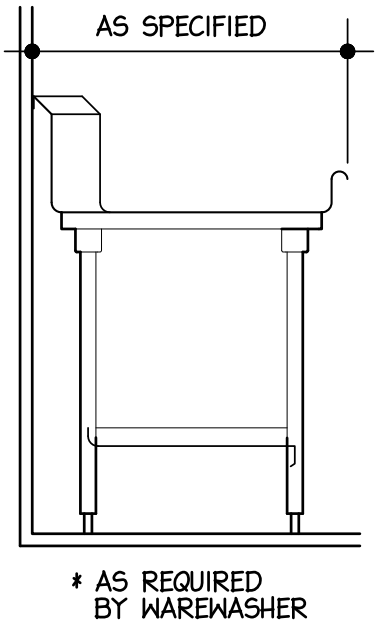

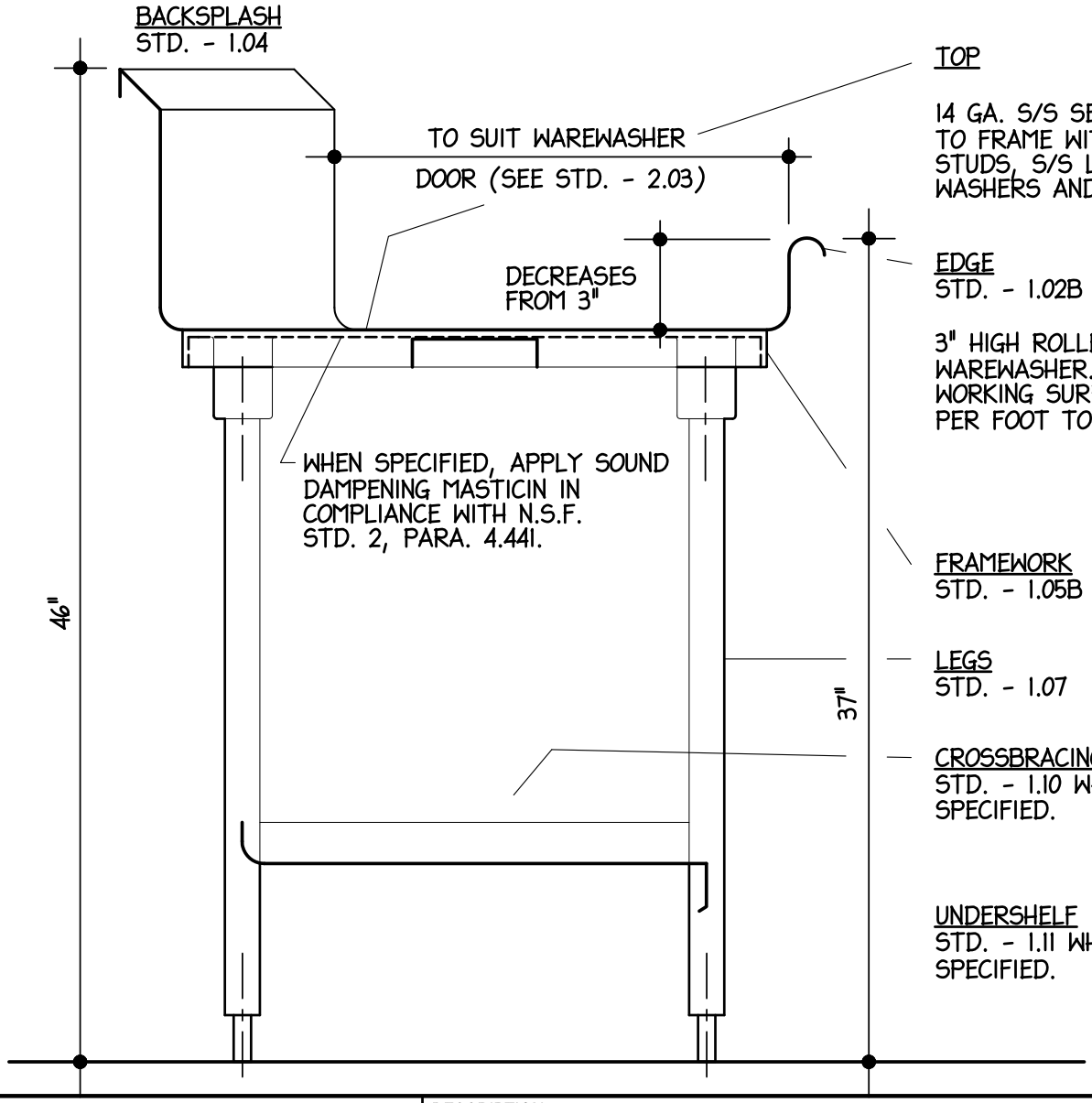

TOP

14 GA. S/S SECURED TO FRAME WITH WELDED STUDS, S/S LOCK-WASHERS AND CAP NUTS.

EDGE
STD. - 1.02B

3" HIGH ROLLED EDGE AT WAREWASHER. PITCH WORKING SURFACE 1/8" PER FOOT TO WAREWASHER.

FRAMEWORK
STD. - 1.05B

LEGS
STD. - 1.07

CROSSBRACING
STD. - 1.10 WHEN SPECIFIED.

UNDERSHELF
STD. - 1.11 WHEN SPECIFIED.

NYIKOS ASSOCIATES, INC. Food Facilities Design/Consulting	DESCRIPTION: DISHTABLE	STANDARD DTL: 2.02 PAGE: 114000-73

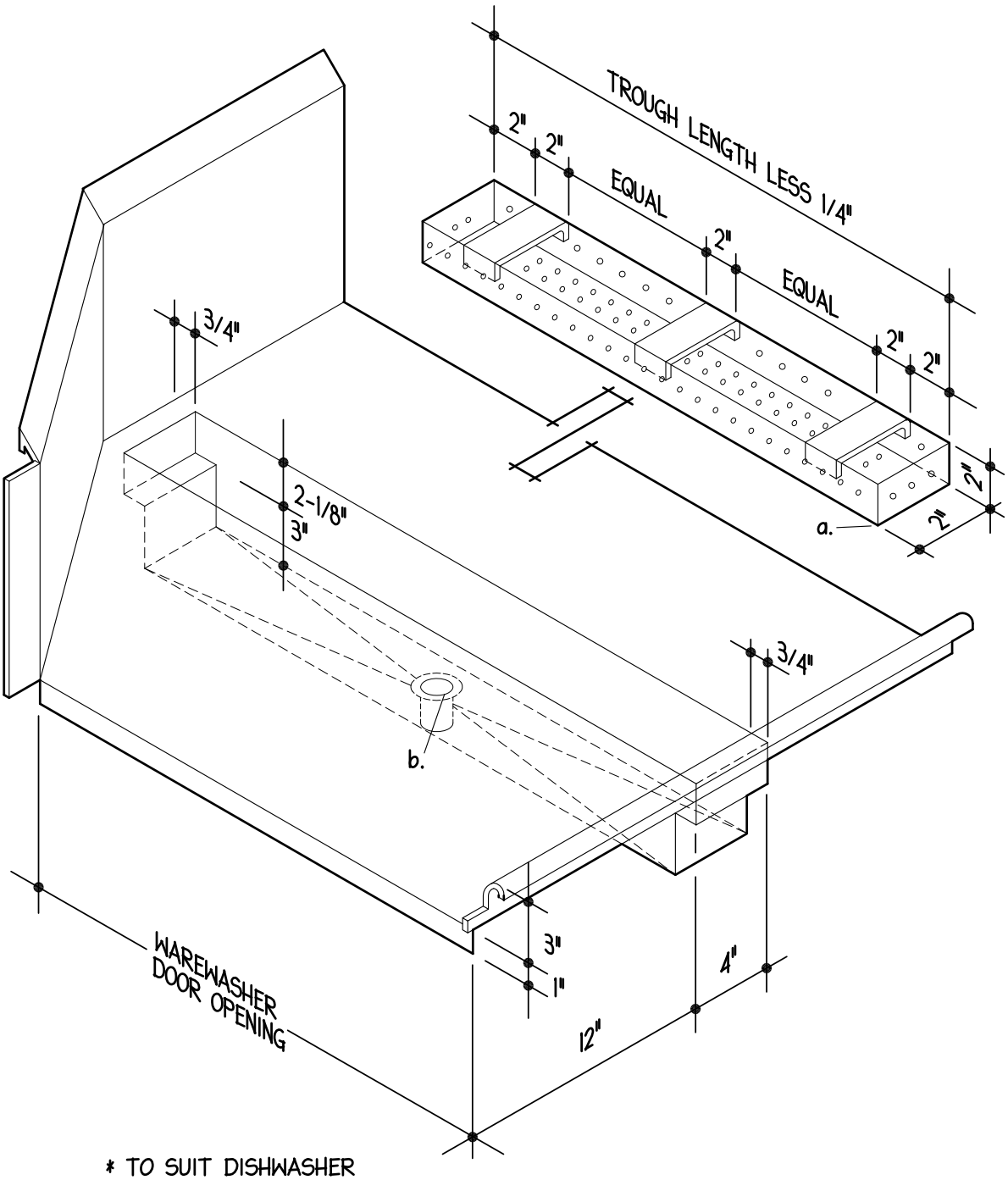

* TO SUIT DISHWASHER

a. BASKET - 16 GA. PERFORATED S/S, ALL WELDED CONSTRUCTION.

b. WASTE - 1-1/2" CHROME PLATED BRASS DRAIN -- STANDARD-KEIL #1816-1812-1368

NYIKOS ASSOCIATES, INC. Food Facilities Design/Consulting	DESCRIPTION: WAREWASHER CONNECTION AND TABLE TROUGH	STANDARD DTL: 2.03 PAGE: 114000-74

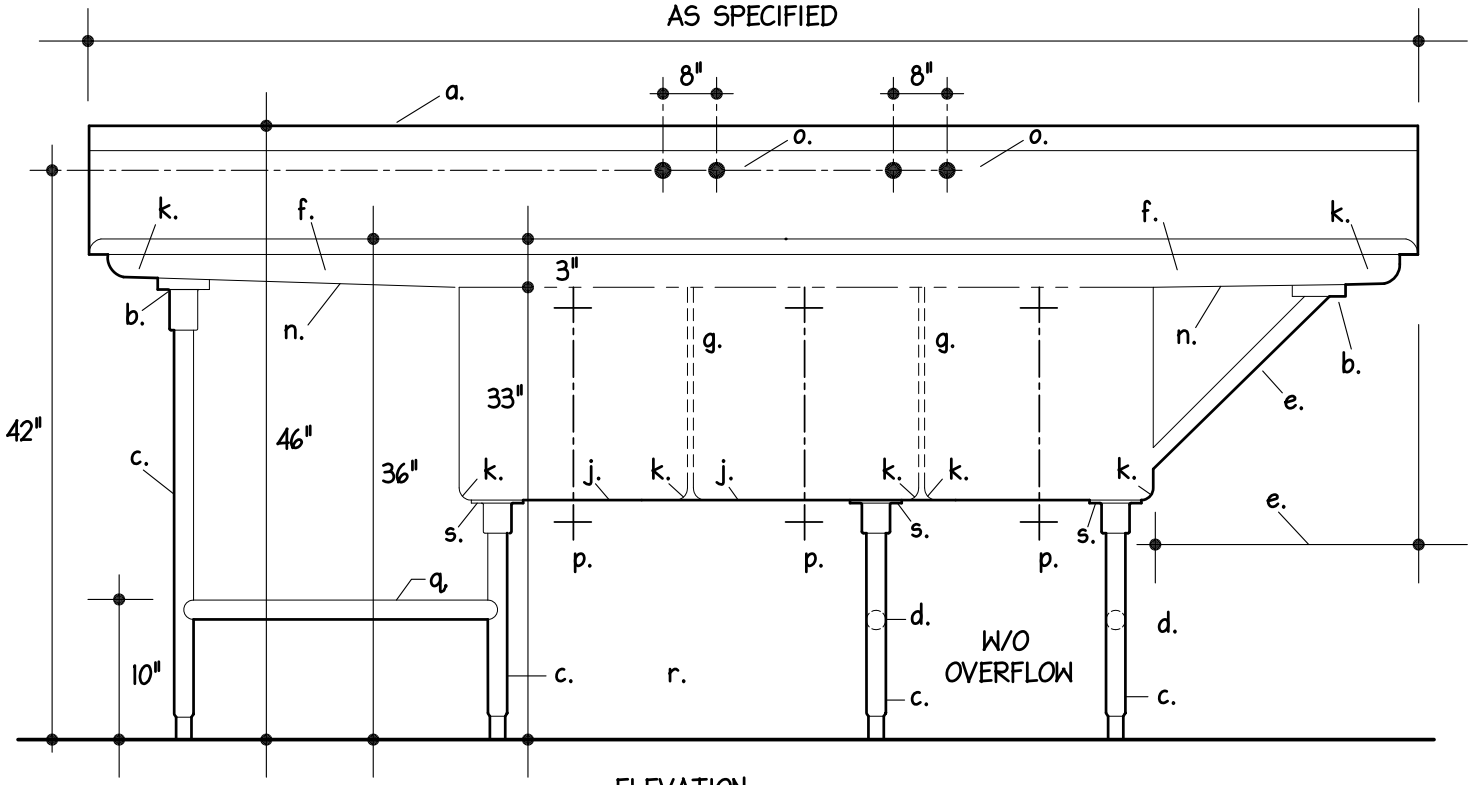

ELEVATION

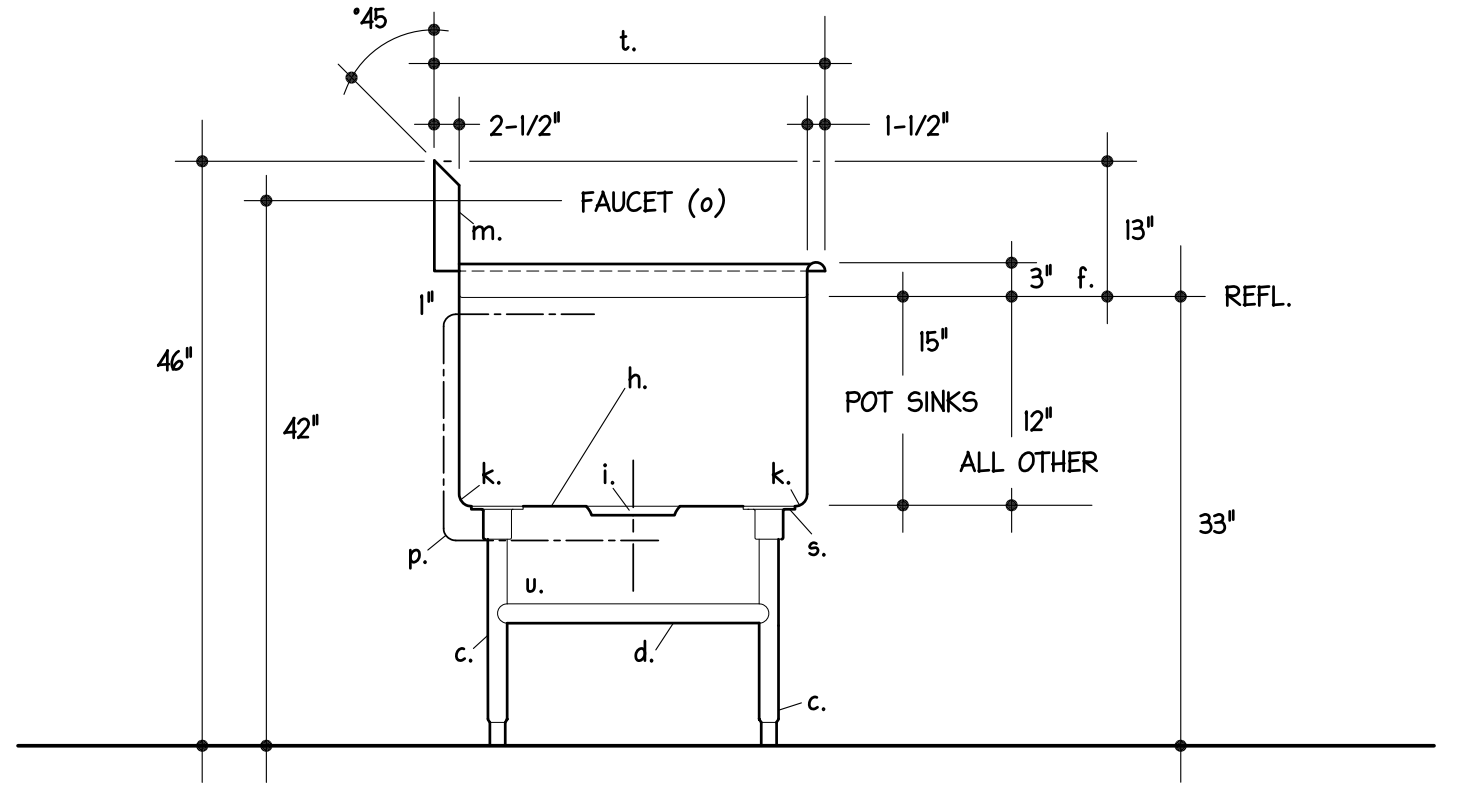

TYPICAL SECTION

a. MATERIAL - 14 GA. S/S.

b. STD. - 1.05c.

c. STD. - 1.07

d. STD. - 1.10

CONTINUED ON STD.- 3.01.1

e. DRAINBOARDS UP TO 24" IN LENGTH REQUIRE NO LEGS OR BRACES. DRAINBOARDS 25" TO 30" REQUIRE 1" O.D. 16 GA. S/S BRACE. DRAINBOARDS OVER 30" REQUIRE LEGS AND CHANNEL FRAMEWORK.

f. DRAINBOARDS SHALL PITCH TO SINK 1/8" PER FOOT OF LENGTH TO PROVIDE COMPLETE DRAINING WITHOUT POOLING. THE 3" HIGH RAISED ROLLED RIM AT THE SINK SHALL DECREASE IN HEIGHT TOWARD THE OUTER ENDS OF THE DRAINBOARD.

g. PARTITIONS BETWEEN COMPARTMENTS TO BE DOUBLE WALLED CONSTRUCTION WITH ROUNDED TOP, ALL WELDED INTEGRAL WITH SINK BODY.

h. BACK, BOTTOM, AND FRONT SHALL BE ONE CONTINUOUS PIECE WITH ENDS WELDED INTEGRAL, WITHOUT OVERLAPPING JOINTS OR OPEN SPACES, BETWEEN COMPARTMENTS.

i. WASTES SHALL BE SEATED IN DIE STAMPED DEPRESSIONS WITHOUT USE OF SOLDER, RIVETS OR WELDING. INSTALLED COMPONENTS SHALL BE FLUSH WITH SURROUNDING SURFACE.

j. EACH SINK COMPARTMENT TO BE PITCHED AND CREASED TO WASTE TO ASSURE COMPLETE DRAINING WITHOUT POOLING.

k. ENTIRE UNIT SHALL BE ALL WELDED COVE CORNERED CONSTRUCTION WITH VERTICAL AND HORIZONTAL AND INTERIOR CORNERS HAVING A 3/4" RADIUS.

l. STD.- 1.02 b EDGE.

m. STD. - 1.04a. BACKSPLASH.

n. UNDERSIDE OF DRAINBOARDS AND SINKS TO BE SPRAYED WITH SOUND DAMPENING IN COMPLIANCE WITH N.S.F. STD. 2 PARA 4.441 WHEN SPECIFIED.

o. FAUCETS - T¢S MODEL B-232 WITH AERATOR B-199, REMOVABLE MONEL SEATS AND 1/2" I.P.S. MALE INLETS.

p. WASTES - 2" NICKEL PLATED BRONZE ROTARY HANDLE WASTE S/S STRAINER PLATE WITH CHROME WITH CHROME PLATED BRASS CONNECTED OVERFLOW, STANDARD- KIEL HARDWARE MFG. CO. #1770-1015-1000.

q, REAR CROSS BRACING ONLY.

r. OMIT FRONT AND REAR LENGTHWISE CROSSBRACIG UNDER SINKS.

s. 12 GAUGE STAINLESS STEEL 6"x 6" TRIANGULAR SUPPORT PLATE WELDED TO UNDERSIDE OF SINKS.

t. WIDTH AS SPECIFIED.

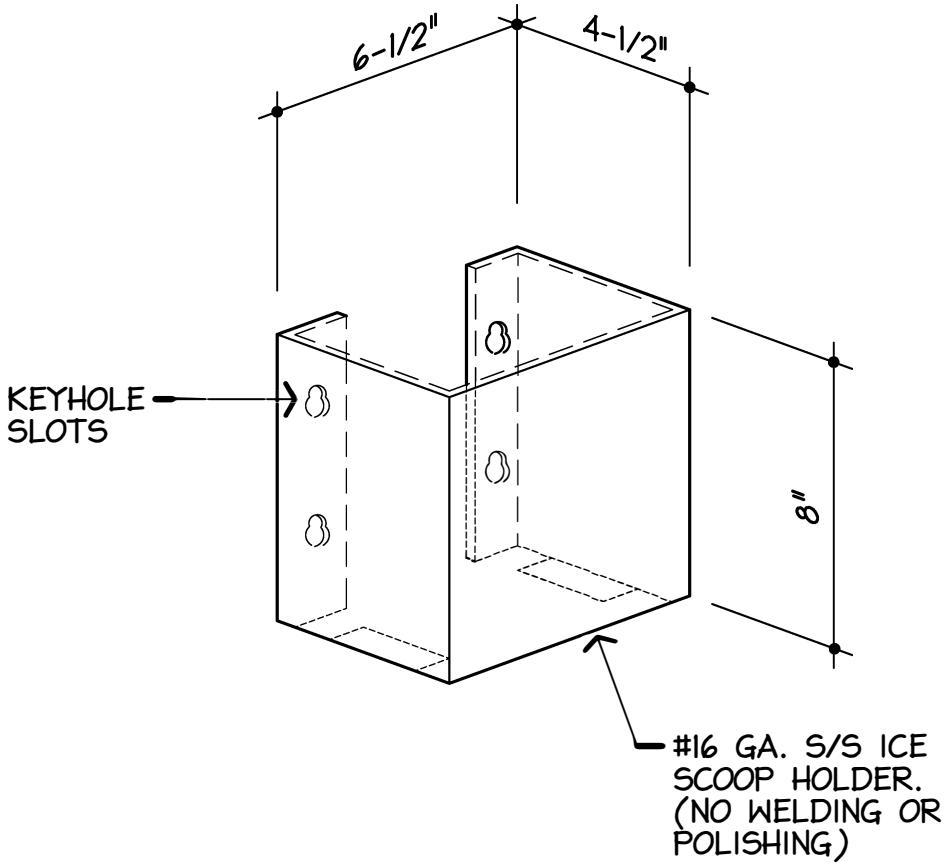

(END OF SECTION 114000)

NYIKOS ASSOCIATES, INC. Food Facilities Design/Consulting	DESCRIPTION: ICE SCOOP HOLDER	STANDARD DTL: 6.2
		PAGE: 114000-77

SECTION 115213.19 - REAR PROJECTION SCREENS

PART 1 - GENERAL

1.1 RELATED DOCUMENTS

A. Drawings and general provisions of the Contract, including General and Supplementary Conditions and Division 01 Specification Sections, apply to this Section.

1.2 SUMMARY

A. Section Includes:

1. Electrically operated, flexible rear-projection screens and controls.

B. Related Requirements:

1. Section 055000 "Metal Fabrications" for metal support framing for rear-projection screens.
2. Section 061053 "Miscellaneous Rough Carpentry" for wood backing for screen installation.

1.3 DEFINITIONS

A. Gain: Ratio of light refracted by screen material to that reflected perpendicularly from a magnesium carbonate surface as determined per SMPTE RP 94, except that for measuring luminance of test screen, projection lamp shall be placed behind screen same distance as it was placed in front of magnesium carbonate surface for measuring luminance of reference standard.

B. Half-Gain Angle: The angle, measured from the axis of the screen surface to the most central position on a perpendicular plane through the horizontal centerline of the screen where the gain is half of the peak gain.

1.4 ACTION SUBMITTALS

A. Product Data: For each type of product.

B. Shop Drawings: Show layouts and types of rear-projection screens. Include the following:

1. For electrically operated, flexible rear-projection screens and controls:

a. Location of wiring connections for electrically operated units.
b. Drop lengths.
c. Anchorage details, including connection to supporting structure for suspended units.
d. Details of juncture of exposed surfaces with adjacent finishes.
e. Accessories.
f. Wiring diagrams.

C. Samples for Initial Selection: For finishes of surface-mounted screen cases.

1.5 CLOSEOUT SUBMITTALS

A. Maintenance Data: For rear-projection screens to include in maintenance manuals.

1.6 DELIVERY, STORAGE, AND HANDLING

A. Environmental Limitations: Do not deliver or install rear-projection screens until spaces are enclosed and weathertight, wet work in spaces is complete and dry, and temporary HVAC system is operating and maintaining ambient temperature and humidity conditions at occupancy levels during the remainder of the construction period.

B. Store rear-projection screens in manufacturer's protective packaging and according to manufacturer's written instructions.

1.7 COORDINATION

A. Coordinate layout and installation of rear-projection screens with adjacent construction, including ceiling suspension systems, light fixtures, HVAC equipment, fire-suppression system, and partitions.

PART 2 - PRODUCTS

2.1 MANUFACTURERS

A. Source Limitations for Rear-Projection Screens: Obtain rear-projection screens from single manufacturer. Obtain accessories, including necessary mounting hardware, from screen manufacturer.

2.2 ELECTRICALLY OPERATED, FLEXIBLE REAR-PROJECTION SCREENS

A. General: Manufacturer's standard units consisting of case, screen, motor, controls, mounting accessories, and other components necessary for a complete installation. Provide units that are listed and labeled as an assembly by UL or another testing and inspecting agency acceptable to authorities having jurisdiction.

1. Electrical Components, Devices, and Accessories: Listed and labeled as defined in NFPA 70, by a qualified testing agency, and marked for intended location and application.
2. Controls: Remote, key-operated, three-position control switch installed in recessed device box with flush cover plate matching other electrical device cover plates in room where switch is installed.

   a. Provide power supply for low-voltage systems if required.
   b. Provide infrared remote control consisting of battery-powered transmitter and receiver.
   c. Provide video interface control for connecting to projector. Projector provides signal to raise or lower screen.

3. Motor in Roller: Instant-reversing motor of size and capacity recommended by screen manufacturer; with permanently lubricated ball bearings, automatic thermal-overload protection, preset limit switches to automatically stop screen in up and down positions, and positive-stop action to prevent coasting. Mount motor inside roller with vibration isolators to reduce noise transmission.
4. Screen Mounting: Top edge securely anchored to rigid metal roller and bottom edge formed into a pocket holding a 3/8-inch- (9.5-mm-) diameter metal rod with ends of rod protected by plastic caps.

   a. Roller is supported by vibration- and noise-absorbing supports.

5. Tab Tensioning: Provide units that have a durable low-stretch cord, such as braided polyester, on each side of screen that is connected to edge of screen by tabs to pull screen flat horizontally.

B. Suspended, Electrically Operated Screens with Automatic Ceiling Closure: Motor-in-roller units designed and fabricated for suspended mounting; with bottom of case composed of two panels, fully enclosing screen, motor, and wiring; one panel is hinged and designed to open and close automatically when screen is lowered and fully raised, and the other is removable or openable for access to interior of case.

1. Basis-of-Design Product: Subject to compliance with requirements, provide Draper Inc.; Premiere Electric Projection Screen or a comparable product by one of the following:

a. Da-Lite Screen Company.
b. Stewart Filmscreen Corporation.

2. Provide metal or metal-lined wiring compartment.
3. Screen Case: Made from metal.
4. Provide screen case with attachments for suspension from structure above.
5. Finish on Exposed Surfaces: Vinyl covering or baked enamel, black.

2.3 FLEXIBLE REAR-PROJECTION SCREEN MATERIAL

A. Moderate-Gain Screens: Coated vinyl sheet with peak gain of not less than 1.3, and half-gain angle of at least 30 degrees from the axis of the screen surface.

1. Basis-of-Design Product: Subject to compliance with requirements, provide Draper, Inc.; Cineflex CH1200V. or a comparable product by one of the following:

a. Da-Lite Screen Company.
b. Stewart Filmscreen Corporation.

B. Mildew-Resistance Rating: Zero or 1 when tested according to ASTM G 21.

C. Flame Resistance: Passes NFPA 701.

D. Flame-Spread Index: Not greater than 75 when tested according to ASTM E 84.

E. Seamless Construction: Provide screens, in sizes indicated, without seams.

F. Size of Viewing Surface: 168 inches wide by 105 inches high.

G. Provide extra drop length of dimensions and at locations indicated.

1. Color: Black.
2. Length: As required to bring screen to 36 inches above platform floor level.

PART 3 - EXECUTION

3.1 FLEXIBLE REAR-PROJECTION SCREEN INSTALLATION

A. Install rear-projection screens at locations indicated to comply with screen manufacturer's written instructions.

B. Install rear-projection screens with screen cases in position and in relation to adjoining construction indicated. Securely anchor to supporting substrate in a manner that produces a smoothly operating screen with vertical edges plumb and viewing surface flat when screen is lowered.

1. Install low-voltage controls according to NFPA 70 and complying with manufacturer's written instructions.

    a. Wiring Method: Install wiring in raceway except in accessible ceiling spaces and in gypsum board partitions where unenclosed wiring method may be used. Use UL-listed plenum cable in environmental air spaces, including plenum ceilings. Conceal raceway and cables except in unfinished spaces.

2. Test electrically operated units to verify that screen controls, limit switches, closures, and other operating components are in optimum functioning condition.
3. Test manually operated units to verify that screen-operating components are in optimum functioning condition.

END OF SECTION 115213.19

SECTION 116143 - STAGE CURTAINS

PART 1 - GENERAL

1.1 RELATED DOCUMENTS

A. Drawings and general provisions of the Contract, including General and Supplementary Conditions and Division 01 Specification Sections, apply to this Section.

1.2 SUMMARY

A. Section Includes:

1. Stage curtains, scrims, and drops.
2. Draw-curtain tracks.
3. Curtain rigging.

B. Related Requirements:

1. Section 055000 "Metal Fabrications" for steel framing and supports for stage-curtain systems.

1.3 PREINSTALLATION MEETINGS

A. Preinstallation Conference: Conduct conference at Project site.

1.4 ACTION SUBMITTALS

A. Product Data: For each type of product and the following:

1. Tracks: Capability of each track to support the weight and operation of curtains that it supports.

B. Shop Drawings: For each installation and for special components not dimensioned or detailed in manufacturer's product data.

1. Include plans, elevations, sections, and attachment details of curtains.
2. Include fabric assembly and hanging details.
3. Dimension operating clearances.
4. Include documentation of capacity of each batten, track, attachment, and rigging component to support loads.
5. Points of attachment for proscenium curtain and the corresponding static and dynamic loads imposed on structure.
6. Locations of equipment components, switches, and controls. Differentiate between manufacturer-installed and field-installed wiring.

C. Samples for Initial Selection: For each type of stage curtain indicated. Include color charts showing full range of colors, textures, and patterns available, together with 12-inch- (300-mm-) square Sample (any color) of each fabric type and seam.

D. Samples for Verification: Full width by minimum 12-inch- (300-mm-) long section of each fabric from dye lot to be used for the Work, with specified treatments applied. Show complete pattern repeat. Mark top and face of fabric.

E. Delegated-Design Submittal: For stage-curtain systems and attachments to structure, including analysis data signed and sealed by the qualified professional engineer responsible for their preparation.

1.5 INFORMATIONAL SUBMITTALS

A. Coordination Drawings: Reflected ceiling plans and other details, drawn to scale, on which the following items are shown and coordinated with each other, using input from installers of the items involved:

1. Structural members to which tracks, battens, and other stage-curtain equipment will be attached.
2. Locations of lighting fixtures and cabling, ductwork, piping, and sprinklers.
3. Rigging equipment for stage equipment.
4. Access panels.

B. Qualification Data: For Installer.

C. Product Certificates: For the following, from manufacturer:

1. Fabric: Provide name of flame-retardant chemical used, identification of applicator, treatment method, application date, allowable life span for treatment, and details of any restrictions and limitations.
2. Rigging: Compliance of suspended battens and tracks with requirements.

1.6 CLOSEOUT SUBMITTALS

A. Operation and Maintenance Data: For stage curtains and rigging to include in operation and maintenance manuals.

1.7 QUALITY ASSURANCE

A. Installer Qualifications: Manufacturer of stage curtains.

1.8 FIELD CONDITIONS

A. Environmental Limitations: Do not install stage curtains until spaces are enclosed and weathertight, wet work in spaces is complete and dry, work at and above ceilings is complete, and ambient temperature and humidity conditions are maintained at the levels indicated for Project when occupied for its intended use.

B. Field Measurements: Verify locations of supporting structural elements and construction contiguous with stage curtains and rigging by field measurements before fabrication and indicate measurements on Shop Drawings.

1.9 WARRANTY

A. Manufacturer's Special Warranty: Manufacturer agrees to repair or replace components of stage-curtain systems that fail in materials or workmanship within specified warranty period.

1. Failures include, but are not limited to, faulty operation of rigging.
2. Warranty Period: Two years from date of Substantial Completion.

PART 2 - PRODUCTS

2.1 STAGE-CURTAIN SYSTEMS

A. Description: Complete stage-curtain systems, including stage curtains, tracks, draw-curtain machines, and rigging; with necessary accessories for support and operation.

1. Manufacturers: Subject to compliance with requirements, provide products by one of the following:

a. Baron Stage Curtain & Equipment.
b. H & H Specialties, Inc.
c. iWeiss Theatrical Solutions.
d. Janson Industries.
e. JR Clancy.
f. Sapsis Rigging Inc.
g. SECOA.
h. Stagecraft Industries, Inc.

B. Source Limitations: Obtain stage-curtain systems from single manufacturer. Obtain each color, grade, finish, type, and variety of fabric from single source with resources to provide materials of consistent quality in appearance and physical properties.

2.2 PERFORMANCE REQUIREMENTS

A. Delegated Design: Engage a qualified professional engineer, as defined in Section 014000 "Quality Requirements," to design stage-curtain systems, including comprehensive engineering analysis and attachments to building structure, using performance requirements.

B. Structural Performance: Stage-curtain systems and attachments to structure shall withstand the effects of gravity and operational loads and the following loads and stresses:

1. Design Loads: Weight of curtains and a safety factor of not less than six.

C. Fire-Test-Response Characteristics: Provide stage curtains meeting the following requirements as determined by testing identical products by UL or another testing and inspecting agency acceptable to authorities having jurisdiction.

1. Flame-Propagation Resistance: Passes NFPA 701.

a. Permanently attach label to each fabric of curtain assembly indicating whether fabric is inherently and permanently flame resistant or is treated with flame-retardant chemicals and whether it requires retreatment after cleaning or after a designated time period of use.
b. Permanently attach 12-inch- (300 mm-) square swatch of same fabric and dye lot for each fabric of a curtain assembly to the back of assembly for use as fire-resistance test strip.

D. Electrical Components, Devices, and Accessories: Listed and labeled as defined in NFPA 70, by a qualified testing agency, and marked for intended location and application.

2.3 CURTAIN FABRICS

A. General: Provide fabrics inherently and permanently flame resistant or chemically flame resistant by immersion treatment according to performance requirements indicated. Provide fabrics of each type and color from same dye lot.

B. Heavyweight Woven Cotton Velour: Napped fabric of 100 percent cotton weighing not less than 25 oz./linear yd. (775 g/linear m), with pile height not less than 79 mils (2 mm); 54-inch (1372-mm) minimum width.

1. Products: Subject to compliance with requirements, available products that may be incorporated into the Work include, but are not limited to the following:

a. Dazian LLC; Symphony.
b. Frankel/Fabric One; 950.
c. JB Martin Company; #2703 Overture.
d. KM Fabrics, Inc.; Memorable.
e. Valley Forge Fabrics, Inc.; 2525 Velour.

2. Color/Texture/Pattern: As selected by Architect from manufacturer's full range.
3. Locations: Main Act and Valance curtains at Platform.

C. Lightweight Woven Cotton Velour: Napped fabric of 100 percent cotton weighing not less than 15 oz./linear yd. (465 g/linear m), with pile height not less than 59 mils (1.5 mm); 54-inch (1372-mm) minimum width.

1. Products: Subject to compliance with requirements, provide one of the following:

a. JB Martin Company; #2503 Melody.
b. KM Fabrics, Inc.; Princess.
c. Valley Forge Fabrics, Inc.; 16 oz. Velvet.

2. Color/Texture/Pattern: As selected by Architect from manufacturer's full range.
3. Location: Cyclorama curtains.

2.4 LINING

A. Cotton Lining: Yarn-dyed denim cloth of 100 percent cotton; woven in a warp-faced twill; 54-inch (1372-mm) minimum width; black.

2.5 CURTAIN-BOTTOM WEIGHTS

A. Individual Weights: Curtain manufacturer's standard segmented weights to suit each curtain type and location.

B. Weight Tape: Curtain manufacturer's standard, continuous weight tape to suit each curtain type and location.

C. Pipe or Conduit Weight and Stiffener: Curtain manufacturer's standard or recommended stiffening pipe or conduit that slides into bottom hem, suitable for curtain type and location indicated.

D. Proof Coil Chain: Grade 30, No. 8, zinc plated, 3/16 inch, ASTM A 413/A 413M

2.6 CURTAIN FABRICATION

A. General: Affix permanent label, stating compliance with requirements of authorities having jurisdiction, in accessible location on fabric not visible to audience. Provide vertical seams unless otherwise indicated. Arrange vertical seams so they do not fall on faces of pleats. Do not use fabric cuts less than one-half width. Orient velour fabric with the fabric nap down.

B. Vertical and Top Hems: Machine sew hems as follows unless otherwise indicated:

1. Vertical Hems: Minimum 2 inches (50 mm) wide, and not less than 4 inches (102 mm) wide at borders, valance, teasers, and tormentors, with not less than a 1-inch (25-mm) tuck and with no selvage material visible from front of curtain. Sew open ends of hems closed.
2. Turnbacks: Provide leading-edge turnbacks for traveler curtains, formed by folding back not less than 12 inches (300 mm) of face fabric, with not less than a 1-inch (25-mm) tuck, and vertically secured by sewing.
3. Top Hems: Reinforced by double-stitching 3-1/2-inch- (89-mm-) wide, heavy, jute webbing to top edge on back side of curtain with not less than 2 inches (50 mm) of face fabric turned under.

C. Fullness:

1. Flat: Provide zero percent fullness in curtains.
2. 50 Percent Fullness: Provide fullness, exclusive of turnbacks and hems, by spaced at 12 inches (300 mm) o.c. along top hem reinforcement.

D. Grommets: Brass, No. 3, or No. 4.

1. Black Curtains: Provide brass or aluminum grommets with black finish.
2. Flat Curtains: Provide blind grommet top finish to mask battens using hidden pairs of grommets; place 12 inches (300-mm) o.c. and 1 inch (25 mm) from corner of curtain; for ties.
3. Pleated Curtains: Center grommets on each box pleat and place 1 inch (25 mm) from corner of curtain; for snap hooks or S-hooks.

E. Bottom Hems: Machine sew hems as follows unless otherwise indicated:

1. For Flat Curtains Without Fullness: 4-inch (100-mm) lined hem with pocket for sliding pipe or conduit weight and stiffener into bottom of curtain, and with a concealing flap of same fabric in front of pocket made 2 inches (50 mm) longer than bottom edge of pocket.
2. For Curtains With Fullness:

   a. Curtains That Do Not Hang to Floor: Hems not less than 3 inches (75 mm) deep, with 3/4-inch (19-mm) weight tape, and with open ends of hems sewn closed.
   b. Floor-Length Curtains: Hems not less than 6 inches (150 mm) deep; with separate, interior, 100 percent cotton, heavy canvas chain pockets equipped with proof coil chain; with chain pockets sewn so that chain rides 2 inches (50 mm) above finished bottom edge of curtain; and with open ends of hems sewn closed.

3. Lining: Where indicated, provide lining for curtain in same fullness as face fabric and finished 2 inches (50 mm) shorter than face fabric. Sew or otherwise securely attach lining to top hem of face fabric. Attach lining to face fabric along bottom and side seams with 4-inch- (100-mm-) long strips of heavy woven cotton tape.

2.7 SCRIMS AND DROPS

A. General: Affix permanent label, stating compliance with requirements of authorities having jurisdiction, in accessible location on fabric not visible to audience. Provide vertical seams unless otherwise indicated. Do not use fabric cuts less than one-half width.

B. Scrims: Scrim curtain fabric sewn flat. Provide with continuous 6-inch (150-mm) pipe pocket at bottom with 6-inch (150-mm) flap of same fabric in front of pocket. Double-stitch 3-1/2-inch (89-mm) jute webbing at top with not less than No. 2 brass grommets spaced at 12 inches (300 mm) o.c. and 1 inch (25 mm) from corner of curtain. Provide not less than 2-inch (50-mm) double-folded side hem and 4-inch (100-mm) bottom hem.

C. Drops: Muslin fabric, sewn flat, with either horizontal or vertical seams and with selvage to the rear. Provide 6-inch (150-mm) pipe pocket at bottom with 6-inch (150-mm) flap of same fabric in front of pocket. Double-stitch 3-1/2-inch (89-mm) jute webbing at top with not less than No. 2 brass grommets spaced at 12 inches (300 mm) o.c. and 1 inch (25 mm) from corner of curtain. Provide not less than 2-inch (50-mm) double-folded side hem and 4-inch (100-mm) bottom hem.

2.8 CURTAIN ACCESSORIES

A. S-Hooks: Manufacturer's standard heavy-duty plated-wire hooks, not less than 2 inches (50 mm) long.

B. Tie Lines: No. 4 or No. 4-1/2 cord or braided soft cotton tape, black or white to best match curtain; not less than 5/8 inch (16 mm) wide by 36 inches (900 mm) long, threaded through grommets.

C. Snap Hooks: Manufacturer's standard heavy-duty hooks, attached to top hem with nylon strap secured by rivets.

2.9 ALUMINUM CURTAIN TRACK

A. Aluminum Track: Extruded aluminum, ASTM B 221 (ASTM B 221M); alloy and temper as recommended by manufacturer for strength and corrosion resistance; mill finish; complete with necessary accessories for support and operation.

1. Manufacturers: Subject to compliance with requirements, available manufacturers offering products that may be incorporated into the Work include, but are not limited to the following:

   a. Automatic Devices Company.
   b. H & H Specialties Inc.
   c. Tru-Roll, Inc.

2. Curved Track: Fabricate curved portions of track in shop.
3. Cable Guides for Curved Track: Outside idlers, mule pulleys, spindles, and guides; quantity sufficient for configuration of curve(s) and length of track.
4. Aluminum Thickness: As recommended by manufacturer for loads and operation.

B. Curtain Rails: Single or double curtain capacity as indicated. Provide end stops for track rails.

C. Curtain Carriers: Standard carriers with a pair of nylon-tired ball-bearing wheels riveted parallel to plated-steel body. Equip carriers with rubber or neoprene bumpers and nylon glide strips to reduce noise, and heavy-duty, plated-steel swivel eye for attaching curtain snap or S-hook. Provide quantity of curtain carriers sufficient for track length, to suit curtain fabrication.

1. Master Curtain Carriers: One master carrier, for each leading curtain edge, with two pairs of nylon-tired ball-bearing wheels riveted parallel to plated-steel body.

D. Curved-Suspended-Track Stiffener: NPS 1-1/2 (DN 40) steel pipe for supporting both sections of suspended curved tracks; curved to match track.

E. Clamp and Bracket Hangers: Steel clamps and brackets of sufficient strength required to support loads for attaching track to overhead support.

F. Track-Lap Clamp: Metal to match track channel for attaching two tracks at center overlap.

G. Folding Guide: Where indicated, equip carriers with rear-fold or backpack guide and rubber spacers to fold curtain from the offstage end of the track; sized for use with operating line if any.

H. Manual Cord Operation: Fabricate curtain track with cord, pulleys, and floor pulley.

1. Operating Line: 3/8-inch- (9-mm-) diameter, stretch-resistant operating cord consisting of braided synthetic-fiber jacket over solid, synthetic-fiber, linear filaments.
2. End Pulleys: One single dead-end and one double live-end pulley. Provide sheave(s) with shielded ball bearing(s) housed in plated-steel body finished to match track. Provide with bracket for securing off-stage curtain end.
3. Floor Pulley: Sheave with shielded ball bearing housed in plated-steel body, painted black. Adjustable type, with 3-inch (75 mm) wheel.

2.10 STEEL CURTAIN TRACK

A. Steel Track: Roll-formed, galvanized, commercial-quality, zinc-coated steel sheet, ASTM A 653/A 653M; G60 (Z180) coating designation; with continuous bottom slot and with each half of track in one continuous piece; complete with necessary accessories for support and operation.

1. Manufacturers: Subject to compliance with requirements, available manufacturers offering products that may be incorporated into the Work include, but are not limited to the following:

   a. Automatic Devices Company.
   b. H & H Specialties Inc.
   c. Tru-Roll, Inc.

2. Curved Track: Factory-fabricated sections.
3. Cable Guides for Curved Track: Outside idlers, mule pulleys, spindles, and guides; quantity sufficient for configuration of curve(s) and length of track.
4. Steel Thickness: As recommended by manufacturer for loads and operation.

   a. Heavy Duty: Minimum 0.079 inch (2.01 mm).
   b. Medium Duty: Minimum 0.064 inch (1.63 mm).

B. Curved-Suspended-Track Stiffener: NPS 1-1/2 (DN 40) steel pipe for supporting both sections of suspended curved tracks; curved to match track.

C. Clamp and Bracket Hangers: Steel clamps and brackets of sufficient strength required to support loads for attaching track to overhead support.

D. Track-Lap Clamp: Metal to match track channel for attaching two tracks at center overlap.

E. Folding Guide: Where indicated, equip carriers with rear-fold or backpack guide and rubber spacers to fold curtain from the offstage end of the track; sized for use with operating line if any.

F. Heavy-Duty Track System: Equip track with heavy-duty components as recommended by manufacturer for loads and operation. Provide end stops for track.

1. Curtain Carriers: Standard carriers of plated steel with a pair of nylon-tired ball-bearing wheels riveted parallel to body. Equip carriers with rubber or neoprene bumpers to reduce noise, and heavy-duty, plated-steel swivel eye and trim chain for attaching curtain snap or S-hook. Provide quantity of curtain carriers sufficient for track length, to suit curtain fabrication.

a. Master Curtain Carriers: One master carrier, for each leading curtain edge, of plated steel with two pairs of nylon-tired ball-bearing wheels and with two line guides per carrier.

2. Pulleys: One dead-end, single-wheel pulley; one live-end, double-wheel pulley; and one adjustable pulley to maintain proper tension on operating line; each with not less than 5-inch (125-mm) molded-nylon- or glass-filled-nylon-tired ball-bearing sheaves enclosed in steel housings. Provide pulleys with steel housing finished to match track and with bracket for securing off-stage curtain end.

G. Medium-Duty Track System: Equip track with components as recommended by manufacturer for loads and operation. Provide end stops for track.

1. Curtain Carriers: Standard carriers of plated steel with a pair of nylon wheels riveted parallel to body. Equip carriers with plated-steel swivel eye for attaching curtain snap or S-hook. Provide quantity of curtain carriers sufficient for track length, to suit curtain fabrication.

a. Master Curtain Carriers: One master carrier, for each leading curtain edge, of plated steel with two pairs of nylon wheels and with two line clamps per carrier.

2. Pulleys: One dead-end, single-wheel pulley; one live-end, double-wheel pulley; and one adjustable pulley to maintain proper tension on operating line; each containing guarded ball-bearing sheaves enclosed in steel housings. Provide pulleys with steel housing finished to match track and with bracket for securing off-stage curtain end.

H. Manual Cord Operation: Provide with cord operating line, 3/8-inch- (9-mm-) diameter, stretch-resistant operating cord of braided synthetic-fiber jacket over solid, synthetic-fiber, linear filaments.

2.11 CURTAIN RIGGING

A. Battens: Fabricated from steel pipe with a minimum number of joints. Connect pipe at joints with a drive-fit pipe sleeve not less than 18 inches (450 mm) long, and secure with four flush rivets, plug welds, threaded couplings, or another equally strong method.

1. Steel Pipe: ASTM A 53/A 53M, Grade A, standard weight (Schedule 40), black, NPS 1-1/2 (DN 40) nominal diameter unless otherwise indicated.
2. Finish: Shop painted black, with a 1-inch- (25-mm-) wide yellow stripe at center of each batten.

B. Supports, Clamps, and Anchors: ASTM A 153/A 153M, Class B, galvanized sheet steel in manufacturer's standard thicknesses, galvanized after fabrication.

C. Trim and Support Cable: 1/4-inch- (6-mm-) diameter, 7x19 galvanized-steel cable with a breaking strength of 7000 lb (3175 kg). Provide fittings according to cable manufacturer's written instructions for

size, number, and method of installation, including a drop-forged galvanized turnbuckle to allow for leveling.

D. Trim and Support Chain: ASTM A 391/A 391M, Grade 80, hardened alloy steel chain rated for overhead lifting.

E. Inserts, Bolts, Rivets, and Fasteners: Manufacturer's standard corrosion-resistant units.

PART 3 - EXECUTION

3.1 EXAMINATION

A. Examine areas and conditions, with Installer present, for compliance with requirements for supporting members, blocking, installation tolerances, clearances, and other conditions affecting performance of stage-curtain work.

B. Examine inserts, clips, blocking, or other supports required to be installed by others to support tracks and battens.

C. Proceed with installation only after unsatisfactory conditions have been corrected.

3.2 INSTALLATION, GENERAL

A. Install stage-curtain system according to curtain and track manufacturer's written instructions.

3.3 BATTEN INSTALLATION

A. Install battens by suspending at heights indicated with trim and supports spaced to support load, except do not exceed 10 feet (3 m) between supports.

1. Cable Trim and Support: Secure cables either directly to structures or to inserts, eye screws, or other devices that are secure and appropriate to substrate and that are not subject to deterioration or failure with age or elevated temperatures. Attach other cable end to pipe clamps with turnbuckles, housed or fixed with nuts after adjustment, to prevent loosening.
2. Chain Trim and Support: Secure chain with load-rated terminations.

3.4 TRACK INSTALLATION

A. Ceiling-Mounted Track: Drill track at intervals not greater than manufacturer's written instructions for spacing, and fasten directly to structure.

B. Beam-Mounted Track: Install track by suspending from beam clamps securely mounted to I-beam structure at track-support spacing, according to manufacturer's written instructions.

C. Wall-Mounted Track: Install track by suspending from brackets securely mounted to wall construction at track-support spacing, according to manufacturer's written instructions.

D. Batten-Hung Track: Install track by suspending from pipe batten with manufacturer's track clamp hangers attached to batten pipe clamps at track-support spacing, according to manufacturer's written instructions.

E. Track-Support Spacing: According to manufacturer's recommendations for applied loads, but not exceeding the following dimensions between supports:

1. Heavy-Duty Track: 72 inches (1829 mm).
2. Medium-Duty Track: 48 inches (1219 mm).
3. Curved Walk-Along Track: 48 inches (1219 mm), with additional supports at curves and splices.

F. Install track for center-parting curtains with not less than 24-inch (600-mm) overlap of track sections at center, supported by track lap clamps.

3.5 CURTAIN INSTALLATION

A. Track Hung: Secure curtains to track carriers with snap hooks.

B. Batten Hung: Secure curtains to pipe battens with S-hooks.

3.6 DRAW-CURTAIN-MACHINE INSTALLATION

A. Install each draw-curtain machine by securely mounting to the supporting construction, according to manufacturer's written instructions.

B. Adjust each installation to function smoothly and lubricate as recommended by manufacturer.

3.7 DEMONSTRATION

A. Engage a factory-authorized service representative to train Owner's maintenance personnel to adjust, operate, and maintain stage curtains and tracks.

3.8 CURTAIN SCHEDULE

A. Stage Curtain (“STAGE CURTAIN”): As indicated on Drawings and as follows:

1. Type: Grand drape.
2. Horizontal Accessory Curtain: Valance.
3. Size and Arrangement: As indicated on Drawings.
4. Fabric: Heavyweight woven cotton velour.
5. Lining: Cotton.
6. Fullness: 50 percent.
7. Bottom Weights: Proof coil chain.
8. Hanging Accessories: Snap hooks.
9. Track: Medium-duty or heavy-duty steel with single- curtain capacity.
10. Track Shape: Straight.
11. Operation: Manual cord (pulley rope).

B. Stage Curtain (“CYCLORAMA”): As indicated on Drawings and as follows:

1. Type: Cyclorama.
2. Size and Arrangement: As indicated on Drawings.
3. Fabric: Lightweight woven cotton velour.
4. Fullness: Flat.
5. Bottom Weights: Weight tape.

6. Hanging Accessories: S-hooks.
7. Track: Medium-duty steel with single- curtain capacity.
8. Track Shape: Curved as indicated on Drawings.
9. Operation: Manual walk-along.

C. Stage Curtain (“STAGE CURTAIN”): As indicated on Drawings and as follows:

1. Type: Valance.
2. Size and Arrangement: As indicated on Drawings.
3. Fabric: Heavyweight woven cotton velour.
4. Lining: Cotton.
5. Fullness: 50 percent.
6. Bottom Weights: Proof coil chain.
7. Hanging Accessories: S-hooks.
8. Track: Medium-duty steel with single- curtain capacity.
9. Track Shape: Straight.
10. Operation: Fixed.

END OF SECTION 116143

SECTION 116623 - GYMNASIUM EQUIPMENT

PART 1 - GENERAL

1.1 RELATED DOCUMENTS

A. Drawings and general provisions of the Contract, including General and Supplementary Conditions and Division 01 Specification Sections, apply to this Section.

1.2 SUMMARY

A. Section Includes:

1. Basketball equipment.
2. Volleyball equipment.
3. Exercise equipment.
4. Safety pads.

B. Related Requirements:

1. Section 096566 "Resilient Athletic Flooring" for game lines and markers.

1.3 DEFINITIONS

A. BWF: Badminton World Federation.

B. FIBA: Federation Internationale de Basketball Amateur (The International Basketball Federation).

C. FIVB: Federation Internationale de Volleyball (The International Volleyball Federation).

D. NCAA: The National Collegiate Athletic Association.

E. NFHS: National Federation of State High School Associations.

F. USAV: USA Volleyball.

1.4 ACTION SUBMITTALS

A. Product Data: For each type of product.

1. If applicable, include assembly, disassembly, and storage instructions for removable equipment.
2. Motors: Show nameplate data, ratings, characteristics, and mounting arrangements.

B. Shop Drawings: For gymnasium equipment.

1. Include plans, elevations, sections, details, and attachments to other work.
2. Include details of field assembly for removable equipment, connections, installation, mountings, floor inserts, attachments to other work, and operational clearances.
3. Include transport and storage accessories for removable equipment.

C. Samples: For each exposed product and for each item and color specified.

1.5 INFORMATIONAL SUBMITTALS

A. Coordination Drawings: Court layout plans, drawn to scale, and coordinated with floor inserts, game lines, and markers applied to finished flooring.

B. Qualification Data: For Installer.

C. Product Certificates: For each type of gymnasium equipment.

D. Sample Warranty: For special warranty.

1.6 CLOSEOUT SUBMITTALS

A. Operation and Maintenance Data: For gymnasium equipment to include in emergency, operation, and maintenance manuals.

1.7 QUALITY ASSURANCE

A. Installer Qualifications: An entity that employs installers and supervisors who are trained and approved by manufacturer.

1.8 FIELD CONDITIONS

A. Environmental Limitations: Do not install gymnasium equipment until spaces are enclosed and weatherproof, wet work in spaces is complete and dry, and ambient temperature and humidity conditions are maintained at the levels indicated for Project when occupied for its intended use.

B. Field Measurements: Verify position and elevation of floor inserts and layout for gymnasium equipment.

1.9 COORDINATION

A. Coordinate installation of floor inserts with structural floors and finish flooring installation and with court layout and game lines and markers on finish flooring.

B. Coordinate layout and installation of overhead-supported gymnasium equipment and suspension-system components with other construction including light fixtures, HVAC equipment, fire-suppression-system components, and partition assemblies.

PART 2 - PRODUCTS

2.1 MANUFACTURERS, GENERAL

A. Source Limitations: Obtain gymnasium equipment from single source from single manufacturer.

2.2 PERFORMANCE REQUIREMENTS

A. Seismic Performance: Basketball backstops and anchors shall withstand the effects of earthquake motions determined according to ASCE/SEI 7.

2.3 BASKETBALL EQUIPMENT

A. Basis-of-Design Product: Subject to compliance with requirements, provide Performance Sports Systems; #3103 or a comparable product by one of the following:

1. AALC Manufacturing.
2. Bison, Inc.
3. Jaypro Sports Construction Group.
4. Porter Athletic, Inc.

B. General: Provide equipment complying with requirements in NFHS's "NFHS Basketball Rules Book."

C. Protruding fasteners or exposed bolt heads on front face of backboards are not permitted.

D. Provide manufacturer's recommended connections complying with Section 055000 "Metal Fabrications" of size and type required to transfer loads to building structure.

E. Overhead-Supported Backstops:

1. Folding Type: Provide manufacturer's standard assembly for forward-folding, rear-braced backstop, with hardware and fittings to permit folding.
2. Framing: Steel pipe, tubing, and shapes. Design framing to minimize vibration during play.

   a. Center-Mast Frame: Welded with side sway bracing.
   b. Finish: Manufacturer's standard polyester powder-coat finish.

3. Goal Height Adjuster: Adjustable from 8 to 10 feet (2.4 to 3 m) with gear-drive mechanism, locking in any position within adjustment range, with visible height scale attached to side of framing.

   a. Operation: Electric with integral gear-drive motor, with limit switches preset to goal heights and the following:

      1) Key switch control.

F. Backstop Safety Device: Designed to limit free fall if support cable, chains, pulleys, fittings, winch, or related components fail; with mechanical automatic reset; 6000-lb (2722-kg) load capacity; one per folding backstop.

1. Retractor Device: Manufacturer's standard device designed to retract both support and safety cables, chains, and straps away from play of the basketball when backstop is in playing position; one per folding backstop.

G. Backstop Electric Operator: Provide operating machine of size and capacity recommended by manufacturer for equipment specified, with electric motor and factory-prewired motor controls, starter, gear-reduction unit, and remote controls. Coordinate wiring requirements and electrical characteristics with building electrical system.

1. Electrical Components, Devices, and Accessories: Listed and labeled as defined in NFPA 70, by a qualified testing agency, and marked for intended location and application.
2. Operator Type: Cable drum with grooved drum and cable tension device to automatically take up cable slack and retain cable in grooves.
3. Operator Mounting: Wall-mounted board.
4. Motor Electrical Characteristics:

    a. Voltage: 120 V.
    b. Horsepower: 3/4 hp.
    c. Phase: Single.

5. Remote-Control Station(s): NEMA ICS 6, Type 1 enclosure for recessed or flush mounting and momentary-contact, three-position, switch-operated control with up, down, and off functions.

    a. Group Key Switch Control Stations: One switch per each backstop.
    b. Keys: Provide one key per station.
    c. Control Station Enclosure: Provide prime-painted metal enclosure with key access with two sets of keys per enclosure.

6. Limit Switches: Adjustable switches, interlocked with motor controls and set to automatically stop basketball equipment at fully retracted and fully lowered positions.

H. Basketball Backboards:

1. Shape and Size:

    a. Rectangular, 72 by 42 inches (1800 by 1067 mm) width by height.

2. Backboard Material: With predrilled holes or preset inserts for mounting goals, and as follows:

    a. Fiberglass: Not less than 1-1/2-inch- (38-mm-) thick, composite backboard consisting of not less than two 3/16-inch- (5-mm-) thick, molded fiberglass panels laminated together over faces and edges encapsulating a 3/4-inch (19-mm) honeycomb core, reinforced at goal and backboard mountings, or a wood panel product core; with threaded inserts or embedded anchors for mounting backboard corners to support framing at standard mounting centers.

3. Target Area and Border Markings: Marked in orange, with manufacturer's standard pattern and stripe width.
4. Finish: Manufacturer's standard factory-applied, white background.

I. Goal Mounting Assembly: Compatible with goal, backboard, and support framing; with hole pattern that is manufacturer's standard for goal attachment.

J. Basketball Goals: Complete with flanges, braces, attachment plate, and evenly spaced loops welded around underside of ring.

1. Single-Rim Basket Ring Competition Goal: Materials, dimensions, and fabrication per manufacturer's standard design.
2. Type: Movable, breakaway design with manufacturer's standard breakaway mechanism and rebound characteristics identical to those of fixed, nonmovable ring.
3. Breakaway Characteristics: Positive-lock movable breakaway design, with manufacturer's standard breakaway mechanism including preset pressure release, set to release at 230-lb (105-kg) load, and automatic reset. Provide movable ring with rebound characteristics identical to those of fixed, nonmovable ring.

4. Field Adjustment: Provide rim that is field-adjustable for rebound elasticity without being removed from the backboard.
5. Net Attachment: Tube tie for attaching net to rim.
6. Finish: Manufacturer's standard finish.

K. Basketball Nets: 12-loop-mesh net, between 15 and 18 inches (380 to 460 mm) long, sized to fit rim diameter, and as follows:

1. Cord: Made from white nylon.
2. Competition Cord: Antiwhip, made from white nylon cord not less than 120-gm thread and not more than 144-gm thread.

L. Backboard Safety Pads: Designed for backboard thickness indicated and extending continuously along bottom and up sides of backboard and over goal mounting and backboard supports per manufacturer's standard design.

1. Attachment: Manufacturer's standard.
2. Color: As selected by Architect from manufacturer's full range.

2.4 EXERCISE EQUIPMENT

A. General: Manufacturer's standard equipment wall-mounted board(s).

B. Climbing Wall: Wall-mounted panels for horizontal wall climbing; with hand holds, ball holders, with safety mat cover.

1. Basis-of-Design: Subject to compliance with requirements provide US Games; Traverse Wall, or comparable product.
2. Panel Size: 48 inches by 96 inches.
3. Panel Finish: Manufacturer’s standard.
4. Hand Holds: 20 per panel.
5. Ball Holders: 2 per panel.
6. Safety Mat Cover: 2-inch thick by 72-inch high, with cordless locking system.

C. Metal Finish: Manufacturer's standard factory-applied, polyester powder-coat finish.

D. Wood Finish: Manufacturer's standard transparent or opaque-painted finish.

2.5 SAFETY PADS

A. Basis-of-Design Product: Subject to compliance with requirements, provide Draper Inc; EcoVision Wall Pads or a comparable product by one of the following:

1. American Athletic, Inc.
2. IPI by Bison.
3. Jaypro Sports, LLC.
4. Performance Sports Systems.
5. Porter Athletic Equipment Company.
6. Spalding Equipment.

B. Safety Pad Surface-Burning Characteristics: ASTM E 84 by UL or another testing and inspecting agency acceptable to authorities having jurisdiction:

1. Flame-Spread Index: 26 to 75.
2. Smoke-Developed Index: 450 or less.

C. Pad Coverings: Provide safety pad fabric covering that is fabricated from puncture- and tear-resistant, PVC-coated polyester or nylon-reinforced PVC fabric, not less than 14-oz./sq. yd (475-g/sq. m) and treated with fungicide for mildew resistance; with surface-burning characteristics indicated, and lined with fire-retardant liner.

D. Wall Safety Pads: Padded wall wainscot panels designed to be attached in a continuous row; each panel section consisting of fill laminated to backer board with visible surfaces fully covered by seamless fabric covering, free of sag and wrinkles and firmly attached to back of backer board.

1. Backer Board: Not less than 3/8-inch- (9.5-mm-) thick plywood, mat formed, or composite panel.
2. Fire-Resistive Fill: Multiple-impact-resistant foam not less than 1-1/2-inch- (38-mm-) thick, fire-resistive neoprene; 6.0-lb/cu. ft. (96-kg/cu. m) density.
3. Size: Each panel section, 24 inches (600 mm) wide by not less than 84 inches (2100 mm) long.
4. Number of Modular Panel Sections: As indicated.
5. Installation Method: Manufacturer's standard.
6. Fabric Covering Color(s): As selected by Architect from manufacturer's full range for two color(s).

E. Corner Wall Safety Pads: Wall corner pad consisting of not less than 1-1/4-inch- (32-mm-) thick, multiple-impact-resistant, closed-cell, polyethylene-foam filler, covered on both sides and all edges by fabric covering with backer board and manufacturer's standard anchorage to wall.

1. Length: Each pad matching length of wall safety pads.
2. Fabric Covering Color(s): Match color of wall safety pads for color(s).

F. Cut-out Trim: Provide manufacturer's standard flanged cut-out trim kits for fitting pads around switches, receptacles, and other obstructions.

1. Color: As selected by Architect.

2.6 MATERIALS

A. Aluminum: Alloy and temper recommended by manufacturer for use and finish type indicated.

1. Extruded Bars, Profiles, and Tubes: ASTM B 221 (ASTM B 221M).
2. Cast Aluminum: ASTM B 179.
3. Flat Sheet: ASTM B 209 (ASTM B 209M).

B. Steel: Comply with the following:

1. Steel Plates, Shapes, and Bars: ASTM A 36/A 36M.
2. Steel Tubing: ASTM A 500/A 500M or ASTM A 513, cold formed.
3. Steel Sheet: ASTM A 1011/A 1011M.

C. Support Cable: Manufacturer's standard galvanized-stranded-steel wire rope with a breaking strength of 7000 lb (3175 kg). Provide fittings complying with wire rope manufacturer's written instructions for size, number, and installation method.

D. Castings and Hangers: Malleable iron, complying with ASTM A 47/A 47M; grade required for structural loading.

E. Softwood Plywood: DOC PS 1, exterior.

F. Particleboard: ANSI A208.1.

G. Equipment Wall-Mounted Board: Wood, transparent finish, size, and quantity as required to mount gymnasium equipment according to manufacturer's written instructions.

H. Anchors, Fasteners, Fittings, and Hardware: Manufacturer's standard corrosion-resistant or noncorrodible units; concealed; tamperproof, vandal- and theft-resistant design.

I. Grout: Nonshrink, nonmetallic, premixed, factory-packaged, nonstaining, noncorrosive, nongaseous grout, complying with ASTM C 1107/C 1107 with minimum strength recommended in writing by gymnasium equipment manufacturer.

PART 3 - EXECUTION

3.1 EXAMINATION

A. Examine substrates, areas, and conditions, with Installer present, for compliance with requirements for play court layout, alignment of mounting substrates, installation tolerances, operational clearances, accurate locations of connections to building electrical system, and other conditions affecting performance of the Work.

1. Verify critical dimensions.
2. Examine supporting structure, subfloors, and footings below finished floor.
3. Examine wall assemblies, where reinforced to receive anchors and fasteners, to verify that locations of concealed reinforcements are clearly marked. Locate reinforcements and mark locations.

B. Proceed with installation only after unsatisfactory conditions have been corrected.

3.2 INSTALLATION, GENERAL

A. General: Comply with manufacturer's written installation instructions. Complete equipment field assembly where required.

B. Unless otherwise indicated, install gymnasium equipment after other finishing operations, including painting, are completed.

C. Permanently Placed Gymnasium Equipment and Components: Install rigid, level, plumb, square, and true; anchored securely to supporting structure; positioned at locations and elevations indicated; in proper relation to adjacent construction; and aligned with court layout.

1. Operating Gymnasium Equipment: Verify clearances for movable components of gymnasium equipment throughout entire range of operation and for access to operating components.

D. Wall, Corner, and Column Safety Pads: Mount with bottom edge at 4 inches (102 mm) above finished floor.

E. Cut-out Trim: Limit cuts in face of padding from trim unit's corner-to-corner outside dimensions. Install with ends of cuts concealed behind trim flange.

F. Anchoring to In-Place Construction: Use anchors and fasteners where necessary to secure built-in and permanently placed gymnasium equipment to structural support and to properly transfer load to in-place construction.

G. Connections: Connect electric operators to building electrical system.

H. Removable Gymnasium Equipment and Components: Assemble in place to verify that equipment and components are complete and in proper working order. Instruct Owner's designated personnel in properly handling, assembling, adjusting, disassembling, transporting, storing, and maintaining units. Disassemble removable gymnasium equipment after assembled configuration is approved by Owner, and store units in location indicated on Drawings.

3.3 ADJUSTING

A. Adjust movable components of gymnasium equipment to operate safely, smoothly, easily, and quietly, free from binding, warp, distortion, nonalignment, misplacement, disruption, or malfunction, throughout entire operational range. Lubricate hardware and moving parts.

3.4 CLEANING

A. After completing gymnasium equipment installation, inspect components. Remove spots, dirt, and debris and touch up damaged shop-applied finishes according to manufacturer's written instructions.

B. Replace gymnasium equipment and finishes that cannot be cleaned and repaired, in a manner approved by Architect, before time of Substantial Completion.

3.5 DEMONSTRATION

A. Engage a factory-authorized service representative to train Owner's maintenance personnel to adjust, operate, and maintain gymnasium equipment.

END OF SECTION 116623

SECTION 122113 - HORIZONTAL LOUVER BLINDS

PART 1 - GENERAL

1.1 RELATED DOCUMENTS

A. Drawings and general provisions of the Contract, including General and Supplementary Conditions and Division 01 Specification Sections, apply to this Section.

1.2 SUMMARY

A. Section Includes:

1. Horizontal louver blinds with aluminum slats.

B. Related Requirements:

1. Section 061053 "Miscellaneous Rough Carpentry" for wood blocking and grounds for mounting horizontal louver blinds and accessories.

1.3 ACTION SUBMITTALS

A. Product Data: For each type of product.

B. Shop Drawings: For horizontal louver blinds, include fabrication and installation details.

C. Samples for Initial Selection: For each type and color of horizontal louver blind.

1. Include Samples of accessories involving color selection.

D. Samples for Verification: For each type and color of horizontal louver blind indicated.

1. Slat: Not less than 12 inches (300 mm) long.
2. Tapes: Full width, not less than 6 inches (150 mm) long.
3. Horizontal Louver Blind: Full-size unit, not less than 16 inches (400 mm) wide by 24 inches (600 mm) long.
4. Valance: Full-size unit, not less than 12 inches (300 mm) wide.

E. Product Schedule: For horizontal louver blinds. Use same designations indicated on Drawings.

1.4 CLOSEOUT SUBMITTALS

A. Maintenance Data: For horizontal louver blinds to include in maintenance manuals.

1.5 MAINTENANCE MATERIAL SUBMITTALS

A. Furnish extra materials, from the same product run, that match products installed and that are packaged with protective covering for storage and identified with labels describing contents.

1. Horizontal Louver Blinds: Full-size units equal to 5 percent of quantity installed for each size, color, texture, pattern, and gloss indicated, but no fewer than two units.

1.6 DELIVERY, STORAGE, AND HANDLING

A. Deliver horizontal louver blinds in factory packages, marked with manufacturer, product name, and location of installation using same designations indicated on Drawings.

1.7 FIELD CONDITIONS

A. Environmental Limitations: Do not install horizontal louver blinds until construction and wet-work and finish work in spaces, including painting, is complete and dry and ambient temperature and humidity conditions are maintained at the levels indicated for Project when occupied for its intended use.

B. Field Measurements: Where horizontal louver blinds are indicated to fit to other construction, verify dimensions of other construction by field measurements before fabrication and indicate measurements on Shop Drawings. Allow clearances for operating hardware of operable glazed units through entire operating range. Notify Architect of installation conditions that vary from Drawings. Coordinate fabrication schedule with construction progress to avoid delaying the Work.

PART 2 - PRODUCTS

2.1 MANUFACTURERS

A. Source Limitations: Obtain horizontal louver blinds from single source from single manufacturer.

2.2 HORIZONTAL LOUVER BLINDS, ALUMINUM SLATS

A. Manufacturers: Subject to compliance with requirements, provide products by one of the following:

1. Hunter Douglas Contract.
2. Levolor Contract; a Newell Rubbermaid company.
3. Springs Window Fashions; SWFcontract.

B. Slats: Aluminum; alloy and temper recommended by producer for type of use and finish indicated; with crowned profile and radius corners.

1. Width: 1 inch (25 mm).
2. Thickness: Not less than 0.006 inch (0.15 mm).
3. Spacing: Manufacturer's standard.
4. Finish: Ionized antistatic, dust-repellent, baked polyester finish.

C. Headrail: Formed steel or extruded aluminum; long edges returned or rolled. Headrails fully enclose operating mechanisms on three sides.

1. Capacity: One blind(s) per headrail unless otherwise indicated.
2. Ends: Capped or plugged.
3. Manual Lift Mechanism:

a. Lift-Cord Lock: Variable; stops lift cord at user-selected position within blind full operating range.
b. Operator: Extension of lift cord(s) through lift-cord lock mechanism to form cord pull.

4. Manual Tilt Mechanism: Enclosed worm-gear mechanism and linkage rod that adjusts ladders.

a. Tilt: Full.
b. Operator: Clear-plastic wand.
c. Over-Rotation Protection: Manufacturer's detachable operator or slip clutch to prevent over rotation of gear.

5. Manual Lift-Operator and Tilt-Operator Lengths: Length required to extend to 48 inches (1219 mm) above floor level when blind is fully closed.
6. Manual Lift-Operator and Tilt-Operator Locations: Manufacturer's standard unless otherwise indicated.
7. Integrated Headrail/Valance: Curved face.

D. Bottom Rail: Formed-steel or extruded-aluminum tube that secures and protects ends of ladders and lift cords and has plastic- or metal-capped ends.

1. Type: Top contoured to match crowned shape of slat.

E. Lift Cords: Manufacturer's standard braided cord.

F. Ladders: Evenly spaced across headrail at spacing that prevents long-term slat sag.

1. Type: Braided cord.

G. Valance: Manufacturer's standard.

H. Mounting Brackets: With spacers and shims required for blind placement and alignment indicated.

1. Type: Wall or as indicated.
2. Intermediate Support: Provide intermediate support brackets to produce support spacing recommended by blind manufacturer for weight and size of blind.

I. Colors, Textures, Patterns, and Gloss:

1. Slats: As selected by Architect from manufacturer's full range.
2. Components: Provide rails, cords, ladders, and materials exposed to view matching or coordinating with slat color unless otherwise indicated.

2.3 HORIZONTAL LOUVER BLIND FABRICATION

A. Product Safety Standard: Fabricate horizontal louver blinds to comply with WCMA A 100.1 including requirements for corded, flexible, looped devices; lead content of components; and warning labels.

B. Unit Sizes: Fabricate units in sizes to fill window and other openings as follows, measured at 74 deg F (23 deg C):

1. Between (Inside) Jamb Installation: Width equal to jamb-to-jamb dimension of opening in which blind is installed less 1/4 inch (6 mm) per side or 1/2 inch (13 mm) total, plus or minus 1/8 inch (3.1 mm). Length equal to head-to-sill dimension of opening in which blind is installed less 1/4 inch (6 mm), plus or minus 1/8 inch (3.1 mm).

2. Outside of Jamb Installation: Width and length as indicated, with terminations between blinds of end-to-end installations at centerlines of mullion or other defined vertical separations between openings.

C. Concealed Components: Noncorrodible or corrosion-resistant-coated materials.

1. Lift-and-Tilt Mechanisms: With permanently lubricated moving parts.

D. Mounting and Intermediate Brackets: Designed for removal and reinstallation of blind without damaging blind and adjacent surfaces, for supporting blind components, and for bracket positions and blind placement indicated.

E. Installation Fasteners: No fewer than two fasteners per bracket, fabricated from metal noncorrosive to brackets and adjoining construction; type designed for securing to supporting substrate; and supporting blinds and accessories under conditions of normal use.

F. Color-Coated Finish:

1. Metal: For components exposed to view, apply manufacturer's standard baked finish complying with manufacturer's written instructions for surface preparation including pretreatment, application, baking, and minimum dry film thickness.

PART 3 - EXECUTION

3.1 EXAMINATION

A. Examine substrates, areas, and conditions, with Installer present, for compliance with requirements for installation tolerances, operational clearances, and other conditions affecting performance of the Work.

B. Proceed with installation only after unsatisfactory conditions have been corrected.

3.2 INSTALLATION

A. Install horizontal louver blinds level and plumb, aligned and centered on openings, and aligned with adjacent units according to manufacturer's written instructions.

1. Locate so exterior slat edges are not closer than 1 inch (25 mm) from interior faces of glass and not closer than 1/2 inch (13 mm) from interior faces of glazing frames through full operating ranges of blinds.
2. Install mounting and intermediate brackets to prevent deflection of headrails.
3. Install with clearances that prevent interference with adjacent blinds, adjacent construction, and operating hardware of glazed openings, other window treatments, and similar building components and furnishings.

B. Electrical Connections: Connect motorized operators to building electrical system.

3.3 ADJUSTING

A. Adjust horizontal louver blinds to operate free of binding or malfunction through full operating ranges.

3.4 CLEANING AND PROTECTION

A. Clean horizontal louver blind surfaces after installation according to manufacturer's written instructions.

B. Provide final protection and maintain conditions in a manner acceptable to manufacturer and Installer that ensures that horizontal louver blinds are without damage or deterioration at time of Substantial Completion.

C. Replace damaged horizontal louver blinds that cannot be repaired in a manner approved by Architect before time of Substantial Completion.

3.5 DEMONSTRATION

A. Engage a factory-authorized service representative to train Owner's maintenance personnel to adjust, operate, and maintain systems.

3.6 HORIZONTAL LOUVER BLIND SCHEDULE

A. Horizontal Louver Blinds: Provide at the following locations:

1. All exterior windows, storefronts, and curtainwalls not scheduled to have roller window shades, except at corridors, vestibules, and stairs.

END OF SECTION 122113

SECTION 122413 - ROLLER WINDOW SHADES

PART 1 - GENERAL

1.1 RELATED DOCUMENTS

A. Drawings and general provisions of the Contract, including General and Supplementary Conditions and Division 01 Specification Sections, apply to this Section.

1.2 SUMMARY

A. Section Includes:

1. Motor-operated roller shades with single rollers.

B. Related Requirements:

1. Section 061053 "Miscellaneous Rough Carpentry" for wood blocking and grounds for mounting roller shades and accessories.
2. Section 079200 "Joint Sealants" for sealing the perimeters of installation accessories for light-blocking shades with a sealant.

1.3 ACTION SUBMITTALS

A. Product Data: For each type of product.

1. Include construction details, material descriptions, dimensions of individual components and profiles, features, finishes, and operating instructions for roller shades.

B. Shop Drawings: Show fabrication and installation details for roller shades, including shadeband materials, their orientation to rollers, and their seam and batten locations.

1. Motor-Operated Shades: Include details of installation and diagrams for power, signal, and control wiring.

C. Samples for Initial Selection: For each type and color of shadeband material.

1. Include Samples of accessories involving color selection.

D. Samples for Verification: For each type of roller shade.

1. Shadeband Material: Not less than 10 inches (250 mm) square. Mark interior face of material if applicable.
2. Installation Accessories: Full-size unit, not less than 10 inches (250 mm) long.

E. Product Schedule: For roller shades. Use same designations indicated on Drawings.

1.4 INFORMATIONAL SUBMITTALS

A. Qualification Data: For Installer.

B. Product Certificates: For each type of shadeband material.

C. Product Test Reports: For each type of shadeband material, for tests performed by a qualified testing agency.

1.5 CLOSEOUT SUBMITTALS

A. Operation and Maintenance Data: For roller shades to include in maintenance manuals.

1.6 MAINTENANCE MATERIAL SUBMITTALS

A. Furnish extra materials that match products installed and that are packaged with protective covering for storage and identified with labels describing contents.

1. Roller Shades: Full-size units equal to 5 percent of quantity installed for each size, color, and shadeband material indicated, but no fewer than two units.

1.7 QUALITY ASSURANCE

A. Installer Qualifications: Fabricator of products.

1.8 DELIVERY, STORAGE, AND HANDLING

A. Deliver roller shades in factory packages, marked with manufacturer, product name, and location of installation using same designations indicated on Drawings.

1.9 FIELD CONDITIONS

A. Environmental Limitations: Do not install roller shades until construction and finish work in spaces, including painting, is complete and dry and ambient temperature and humidity conditions are maintained at the levels indicated for Project when occupied for its intended use.

B. Field Measurements: Where roller shades are indicated to fit to other construction, verify dimensions of other construction by field measurements before fabrication and indicate measurements on Shop Drawings. Allow clearances for operating hardware of operable glazed units through entire operating range. Notify Architect of installation conditions that vary from Drawings. Coordinate fabrication schedule with construction progress to avoid delaying the Work.

PART 2 - PRODUCTS

2.1 MANUFACTURERS

A. Source Limitations: Obtain roller shades from single source from single manufacturer.

2.2 MOTOR-OPERATED, SINGLE-ROLLER SHADES

A. Basis-of-Design Product: Subject to compliance with requirements, provide MechoShade Systems, Inc.; Electro/1 and Electro/2 or a comparable product by one of the following.

1. Draper, Inc.
2. Hunter Douglas Contract.
3. Lutron Electronics Co. Inc.

B. Motorized Operating System: Provide factory-assembled, shade-operator system of size and capacity and with features, characteristics, and accessories suitable for conditions indicated, complete with electric motor and factory-prewired motor controls, power disconnect switch, enclosures protecting controls and operating parts, and accessories required for reliable operation without malfunction. Include wiring from motor controls to motors. Coordinate operator wiring requirements and electrical characteristics with building electrical system.

1. Electrical Components: Listed and labeled as defined in NFPA 70, by a qualified testing agency, and marked for intended location and application.
2. Electric Motor: Manufacturer's standard tubular, enclosed in roller.

a. Electrical Characteristics: 110-V ac.
b. Maximum Total Shade Width: As required to operate roller shades indicated.
c. Maximum Shade Drop: As required to operate roller shades indicated.
d. Maximum Weight Capacity: As required to operate roller shades indicated.

3. Remote Control: Electric controls with NEMA ICS 6, Type 1 enclosure for recessed or flush mounting. Provide the following for remote-control activation of shades:

a. Group Control Station: Momentary-contact, three-position, rocker-style, wall-switch-operated control station with open, close, and center off functions for single-switch group control.
b. Microprocessor Control: Electronic programmable means for setting, changing, and adjusting control features; isolated from voltage spikes and surges.
c. Color: As selected by Architect from manufacturer's full range.

4. Crank-Operator Override: Crank and gearbox operate shades in event of power outage or motor failure.
5. Limit Switches: Adjustable switches interlocked with motor controls and set to stop shades automatically at fully raised and fully lowered positions.
6. Operating Features:

a. Group switching with integrated switch control; single faceplate for multiple switch cutouts.
b. Capable of interface with audiovisual system at Gymnasium/Cafeteria.
c. Capable of accepting input from building automation control system.
d. Override switch.

C. Rollers: Corrosion-resistant steel or extruded-aluminum tubes of diameters and wall thicknesses required to accommodate operating mechanisms and weights and widths of shadebands indicated without deflection. Provide with permanently lubricated drive-end assemblies and idle-end assemblies designed to facilitate removal of shadebands for service.

1. Roller Drive-End Location: Right side of interior face of shade.
2. Direction of Shadeband Roll: Regular, from back (exterior face) of roller.
3. Shadeband-to-Roller Attachment: Manufacturer's standard method.

D. Mounting Hardware: Brackets or endcaps, corrosion resistant and compatible with roller assembly, operating mechanism, installation accessories, and mounting location and conditions indicated.

E. Roller-Coupling Assemblies: Coordinated with operating mechanism and designed to join up to three inline rollers that are operated by one roller drive-end assembly.

F. Shadebands:

1. Shadeband Material: Light-filtering fabric.
2. Shadeband Bottom (Hem) Bar: Steel or extruded aluminum.

a. Type: Enclosed in sealed pocket of shadeband material.
b. Color and Finish: As selected by Architect from manufacturer's full range.

G. Installation Accessories:

1. Front Fascia: Aluminum extrusion that conceals front and underside of roller and operating mechanism and attaches to roller endcaps without exposed fasteners.

a. Shape: L-shaped.
b. Height: Manufacturer's standard height required to conceal roller and shadeband assembly when shade is fully open, but not less than 4 inches (102 mm).

2. Exposed Headbox: Rectangular, extruded-aluminum enclosure including front fascia, top and back covers, endcaps, and removable bottom closure.

a. Height: Manufacturer's standard in height required to enclose roller and shadeband assembly when shade is fully open, but not less than 4 inches (102 mm).

3. Endcap Covers: To cover exposed endcaps.
4. Recessed Shade Pocket: Rectangular, extruded-aluminum enclosure designed for recessed ceiling installation; with front, top, and back formed as one piece, end plates, and removable bottom closure panel.

a. Height: Manufacturer's standard height required to enclose roller and shadeband assembly when shade is fully open, but not less than 5 inches (127 mm).
b. Provide pocket with lip at lower edge to support acoustical ceiling panel.

5. Installation Accessories Color and Finish: As selected from manufacturer's full range.

2.3 SHADEBAND MATERIALS

A. Shadeband Material Flame-Resistance Rating: Comply with NFPA 701. Testing by a qualified testing agency. Identify products with appropriate markings of applicable testing agency.

B. Light-Filtering Fabric: Woven fabric, stain and fade resistant.

1. Source: Roller shade manufacturer.
2. Basis-of-Design: EuroTwill Reversible Weave and ThermoVeil Dense Basket Weave.
3. Type: PVC-coated fiberglass.
4. Weave: Basketweave.
5. Openness Factor: 3 percent.
6. Color: As selected by Architect from manufacturer's full range.

2.4 ROLLER SHADE FABRICATION

A. Product Safety Standard: Fabricate roller shades to comply with WCMA A 100.1, including requirements for flexible, chain-loop devices; lead content of components; and warning labels.

B. Unit Sizes: Fabricate units in sizes to fill window and other openings as follows, measured at 74 deg F (23 deg C):

1. Between (Inside) Jamb Installation: Width equal to jamb-to-jamb dimension of opening in which shade is installed less 1/4 inch (6 mm) per side or 1/2-inch (13-mm) total, plus or minus 1/8 inch (3.1 mm). Length equal to head-to-sill or -floor dimension of opening in which shade is installed less 1/4 inch (6 mm), plus or minus 1/8 inch (3.1 mm).
2. Outside of Jamb Installation: Width and length as indicated, with terminations between shades of end-to-end installations at centerlines of mullion or other defined vertical separations between openings.

C. Shadeband Fabrication: Fabricate shadebands without battens or seams to extent possible, except as follows:

1. Vertical Shades: Where width-to-length ratio of shadeband is equal to or greater than 1:4, provide battens and seams at uniform spacings along shadeband length to ensure shadeband tracking and alignment through its full range of movement without distortion of the material.
2. Skylight Shades: Provide battens and seams at uniform spacings along shadeband as required to ensure shadeband tracking and alignment through its full range of movement without distortion or sag of material.
3. Railroaded Materials: Railroad material where material roll width is less than the required width of shadeband and where indicated. Provide battens and seams as required by railroaded material to produce shadebands with full roll-width panel(s) plus, if required, one partial roll-width panel located at top of shadeband.

PART 3 - EXECUTION

3.1 EXAMINATION

A. Examine substrates, areas, and conditions, with Installer present, for compliance with requirements for installation tolerances, operational clearances, locations of connections to building electrical system, and other conditions affecting performance of the Work.

B. Proceed with installation only after unsatisfactory conditions have been corrected.

3.2 ROLLER SHADE INSTALLATION

A. Install roller shades level, plumb, and aligned with adjacent units according to manufacturer's written instructions.

B. Electrical Connections: Connect motor-operated roller shades to building electrical system.

3.3 ADJUSTING

A. Adjust and balance roller shades to operate smoothly, easily, safely, and free from binding or malfunction throughout entire operational range.

3.4 CLEANING AND PROTECTION

A. Clean roller shade surfaces, after installation, according to manufacturer's written instructions.

B. Provide final protection and maintain conditions, in a manner acceptable to manufacturer and Installer, that ensure that roller shades are without damage or deterioration at time of Substantial Completion.

C. Replace damaged roller shades that cannot be repaired, in a manner approved by Architect, before time of Substantial Completion.

3.5 DEMONSTRATION

A. Engage a factory-authorized service representative to train Owner's maintenance personnel to adjust, operate, and maintain motor-operated roller shades.

3.6 ROLLER WINDOW SHADE SCHEDULE

A. Motor-Operated Shades: Provide at the following locations:

1. Media Center A125, Storefronts SF-2 and SF-7; full-width shades; Controls outside door A126/1; pre-programmed set point at mid-window mullion.
2. Conference A110, Windows PW-3; full-width shades; controls beside door A110/1.
3. Music A118, Storefronts SF-1, SF-2, and SF-7; full-width shades; controls on wall near column AR-A19
4. Gym A125, Storefronts SF-2A; controls at door A120A/1 and at Platform.
5. Cafeteria A121, Storefronts SF-2A; controls at door A122A/1 and at Platform.

END OF SECTION 122413

SECTION 123216 - MANUFACTURED PLASTIC-LAMINATE-FACED CASEWORK

PART 1 - GENERAL

1.1 RELATED DOCUMENTS

A. Drawings and general provisions of the Contract, including General and Supplementary Conditions and Division 01 Specification Sections, apply to this Section.

1.2 SUMMARY

A. Section includes plastic-laminate-faced cabinets of stock design.

B. Related Requirements:

1. Section 061053 "Miscellaneous Rough Carpentry" for wood blocking for anchoring casework.
2. Section 092216 "Non-Structural Metal Framing" for reinforcements in metal-framed partitions for anchoring casework.
3. Section 096513 "Resilient Base and Accessories" for resilient base applied to plastic-laminate-faced casework.
4. Section 123623.13 "Plastic-Laminate-Clad Countertops."
5. Section 123661.16 "Solid Surfacing Countertops."

1.3 DEFINITIONS

A. Definitions in the AWI's, AWMAC's, and WI's "Architectural Woodwork Standards" apply to the work of this Section.

B. MDF: Medium-density fiberboard.

C. Hardwood Plywood: A panel product composed of layers or plies of veneer, or of veneers in combination with lumber core, hardboard core, MDF core, or particleboard core, joined with adhesive, and faced both front and back with hardwood veneers.

1.4 PREINSTALLATION MEETINGS

A. Preinstallation Conference: Conduct conference at Project site.

B. Keying Conference: Conduct conference at Project site. Incorporate keying conference decisions into final keying requirements.

1.5 COORDINATION

A. Coordinate sizes and locations of framing, blocking, furring, reinforcements, and other related units of Work specified in other Sections to ensure that casework can be supported and installed as indicated.

1.6 ACTION SUBMITTALS

A. Product Data: For each type of product.

B. Shop Drawings: Include plans, elevations, sections, details, and attachments to other work. Show fabrication details, including types and locations of hardware. Show installation details, including field joints and filler panels. Indicate manufacturer's catalog numbers for casework.

C. Keying Schedule: Include schematic keying diagram and index each key set to unique designations that are coordinated with the Contract Documents.

D. Samples for Initial Selection: For cabinet finishes.

E. Samples for Verification: 8-by-10-inch (200-by-250-mm) Samples for each type of finish.

1.7 INFORMATIONAL SUBMITTALS

A. Qualification Data: For Installer.

B. Quality Standard Compliance Certificates: AWI Quality Certification Program certificates.

1. AWI QCP Project Number: 18.0841.

1.8 QUALITY ASSURANCE

A. Installer Qualifications: An authorized representative who is trained and approved by manufacturer for installation of units required for this Project and who is a certified participant in AWI's Quality Certification Program.

1.9 DELIVERY, STORAGE, AND HANDLING

A. Deliver casework only after painting, utility roughing-in, and similar operations that could damage, soil, or deteriorate casework have been completed in installation areas. If casework must be stored in other than installation areas, store only in areas where environmental conditions meet requirements specified in "Project Conditions" Article.

B. Keep finished surfaces covered with polyethylene film or other protective covering during handling and installation.

1.10 FIELD CONDITIONS

A. Environmental Limitations: Do not deliver or install casework until building is enclosed, wet work is complete, and HVAC system is operating and maintaining temperature and relative humidity at occupancy levels during the remainder of the construction period. Maintain temperature and relative humidity during the remainder of the construction period in range recommended for Project location by the AWI's, AWMAC's, and WI's "Architectural Woodwork Standards."

B. Established Dimensions: Where casework is indicated to fit to other construction, establish dimensions for areas where woodwork is to fit. Provide allowance for trimming at site, and coordinate construction to ensure that actual dimensions correspond to established dimensions.

C. Locate concealed framing, blocking, and reinforcements that support casework by field measurements before being enclosed, and indicate measurements on Shop Drawings.

1.11 WARRANTY

A. Special Warranty: Manufacturer agrees to repair or replace components of casework that fail in materials or workmanship within specified warranty period.

1. Failures include, but are not limited to, the following:

a. Delamination of components or other failures of glue bond.
b. Warping of components.
c. Failure of operating hardware.

2. Warranty Period: Five years from date of Substantial Completion.

PART 2 - PRODUCTS

2.1 MANUFACTURERS

A. Manufacturers: Subject to compliance with requirements, provide products by one of the following:

1. Case Systems Inc.
2. LSI Corporation of America.
3. Stevens Industries, Inc.
4. Thermo Fisher Scientific, Inc.
5. TMI Systems Design Corporation.

B. Source Limitations: Obtain plastic-laminate-faced cabinets from single manufacturer.

2.2 CASEWORK, GENERAL

A. Quality Standard: Unless otherwise indicated, comply with the AWI's, AWMAC's, and WI's "Architectural Woodwork Standards" for grades of casework indicated for construction, finishes, installation, and other requirements.

1. Grade: Custom.
2. Provide labels and certificates from AWI certification program indicating that casework, including installation, complies with requirements of grades specified.

B. Product Designations: Drawings indicate sizes, configurations, and finish materials of manufactured plastic-laminate-faced cabinets by referencing designated manufacturer's catalog numbers. Other manufacturers' casework of similar sizes and door and drawer configurations, of same finish materials, and complying with the Specifications may be considered. See Section 016000 "Product Requirements."

C. Product Designations: Drawings indicate configurations of manufactured plastic-laminate-faced cabinets by referencing designations of Casework Design Series numbering system in Appendix A of the AWI's, AWMAC's, and WI's "Architectural Woodwork Standards."

2.3 CASEWORK

A. Design:

1. Flush overlay.

B. Grain Direction for Wood Grain Plastic Laminate:

1. Vertical on both doors and drawer fronts, with continuous vertical matching.
2. Vertical on doors, horizontal on drawer fronts.
3. Lengthwise on face frame members.
4. Vertical on end panels.
5. Side to side on bottoms and tops of units.
6. Vertical on knee-space panels.
7. Horizontal on aprons.

C. Exposed Materials:

1. Plastic Laminate: Grade HGS.

   a. Colors and Patterns: As indicated.

2. Unless otherwise indicated, provide specified edgebanding on all exposed edges.
3. Solid Wood: Clear hardwood lumber of species indicated, selected for compatible grain and color.
4. Wood Species: White maple.

D. Semiexposed Materials:

1. Plastic Laminate: Grade VGS unless otherwise indicated. Provide plastic laminate for semiexposed surfaces unless otherwise indicated.

   a. Provide plastic laminate of same grade as exposed surfaces for interior faces of doors and drawer fronts and other locations where opposite side of component is exposed.

2. Thermoset Decorative Panels: Provide thermoset decorative panels for semiexposed surfaces unless otherwise indicated.

   a. Provide plastic laminate of same grade as exposed surfaces for interior faces of doors and drawer fronts and other locations where opposite side of component is exposed.

3. Metal for Steel Drawer Pans: Cold-rolled, carbon-steel sheet complying with ASTM A 1008/A 1008M; matte finish; suitable for exposed applications.
4. Unless otherwise indicated, provide specified edgebanding on all semiexposed edges.

E. Concealed Materials:

1. Solid Wood: Any hardwood or softwood species, with no defects affecting strength or utility.
2. Plywood: Hardwood plywood.
3. Plastic Laminate: Grade BKL.
4. Particleboard.
5. MDF.

2.4 MATERIALS

A. Maximum Moisture Content for Lumber: 7 percent for hardwood and 12 percent for softwood.

B. Hardwood Plywood: HPVA HP-1, particleboard core except where veneer core is indicated.

C. Softwood Plywood: DOC PS 1.

D. Particleboard: ANSI A208.1, Grade M-2.

E. Particleboard: Straw-based particleboard complying with ANSI A208.1, Grade M-2, except for density.

F. MDF: ANSI A208.2, Grade 130.

G. Plastic Laminate: High-pressure decorative laminate complying with NEMA LD 3.

1. Manufacturers: Subject to compliance with requirements, provide products by one of the following:

a. Formica Corporation.
b. Nevamar; a Panolam Industries International, Inc. brand.
c. Pionite Surface Systems.
d. Wilsonart.

H. Edgebanding for Plastic Laminate: Rigid PVC extrusions, through color with satin finish, 3 mm thick at doors and drawer fronts, 1 mm thick elsewhere.

I. Thermoset Decorative Panels: Particleboard or medium-density fiberboard finished with thermally fused, melamine-impregnated decorative paper and complying with requirements of NEMA LD 3, Grade VGL, for Test Methods 3.3, 3.4, 3.6, 3.8, and 3.10.

J. Edgebanding for Thermoset Decorative Panels: PVC or polyester edgebanding matching thermoset decorative panels.

K. Glass for Glazed Doors: Clear tempered glass complying with ASTM C 1048, Kind FT, Condition A, Type I, Class 1, Quality-Q3; not less than 5.0 mm thick.

2.5 COLORS AND FINISHES

A. Wood Colors and Finishes: As selected by Architect from casework manufacturer's full range.

B. Thermoset Decorative Panel Colors, Patterns, and Finishes: As selected by Architect from thermoset decorative panel manufacturer's full range.

C. Plastic-Laminate Colors, Patterns, and Finishes: As selected by Architect from plastic-laminate manufacturer's full range.

1. PLAM-1: Wilsonart; Monticello Maple, fine velvet finish 7925-38.
2. PLAM-2: Wilsonart; Blue Curacao, matte Y0353-60.
3. PLAM-3: Wilsonart; Quince, matte Y0346-60.
4. PLAM-4: Wilsonart; Island, linearity finish D498-18.
5. PLAM-6: Wilsonart; Lapis Blue, matte D417-60

D. PVC Edgebanding Color: To match laminate color.

1. Where matching edgebanding color is not available, color shall be as selected by Architect from manufacturer's full range.

2.6 FABRICATION

A. Plastic-Laminate-Faced Cabinet Construction: As required by referenced quality standard, but not less than the following:

1. Bottoms and Ends of Cabinets, and Tops of Wall Cabinets and Tall Cabinets: 3/4-inch (19-mm) particleboard.
2. Shelves: 3/4-inch- (19-mm-) thick plywood or 1-inch- (25-mm-) thick particleboard.
3. Backs of Cabinets: 1/2-inch- (12.7-mm-) thick particleboard or MDF where exposed, dadoed into sides, bottoms, and tops where not exposed.
4. Drawer Fronts: 3/4-inch (19-mm) particleboard.
5. Drawer Sides and Backs: 1/2-inch (12.7-mm) particleboard or MDF, with glued dovetail or multiple-dowel joints.
6. Drawer Bottoms: 1/4-inch (6.4-mm) hardwood plywood glued and dadoed into front, back, and sides of drawers. Use 1/2-inch (12.7-mm) material for drawers more than 24 inches (600 mm) wide.
7. Doors 48 Inches (1200 mm) High or Less: 3/4 inch (19 mm) thick, with particleboard or MDF cores and solid-wood stiles and rails.
8. Doors More Than 48 Inches (1200 mm) High: 1-1/16 inches (27 mm) thick, with honeycomb cores and solid hardwood stiles and rails.
9. Stiles and Rails of Glazed Doors 48 Inches (1200 mm) High or Less: 3/4 inch (19 mm) thick, with particleboard cores.
10. Stiles and Rails of Glazed Doors More Than 48 Inches (1200 mm) High: 1-1/16-inch- (27-mm-) thick, with solid wood cores.

B. Filler Strips: Provide as needed to close spaces between cabinets and walls, ceilings, and indicated equipment. Fabricate from same material and with same finish as cabinets.

2.7 CASEWORK HARDWARE AND ACCESSORIES

A. Hardware, General: Unless otherwise indicated, provide manufacturer's standard satin-finish, commercial-quality, heavy-duty hardware.

1. Use threaded metal or plastic inserts with machine screws for fastening to particleboard except where hardware is through-bolted from back side.

B. Frameless Concealed Hinges (European Type): BHMA A156.9, Type B01602, 135 degrees of opening. Provide two hinges for doors less than 48 inches (1220 mm) high, and provide three hinges for doors more than 48 inches (1220 mm) high.

C. Pulls: Solid stainless-steel wire pulls, fastened from back with two screws. For sliding doors, provide recessed stainless-steel flush pulls. Provide two pulls for drawers more than 24 inches (600 mm) wide.

D. Door Catches: Powder-coated, nylon-roller spring catch or dual, self-aligning, permanent magnet catch. Provide two catches on doors more than 48 inches (1220 mm) high.

E. Drawer Slides: BHMA A156.9, Type B05091.

1. Standard Duty (Grades 1, 2, and 3): Side mounted and extending under bottom edge of drawer; full-extension type; epoxy-coated steel with polymer rollers.

2. Heavy Duty (Grade 1HD-100 and Grade 1HD-200): Side mounted; full-extension type; zinc-plated, steel ball-bearing slides.

F. Label Holders: Stainless steel, sized to receive standard label cards approximately 1 by 2 inches (25 by 51 mm), attached with screws or brads.

1. Provide label holders where indicated, and at each mailbox slot at Mail Room.

G. Drawer and Hinged Door Locks: Cylindrical (cam) type, five-pin tumbler, brass with chrome-plated finish, and complying with BHMA A156.11, Grade 1.

1. Provide a minimum of two keys per lock and six master keys.
2. Provide locks on all doors and drawers.

H. Sliding-Door Hardware Sets: Manufacturer's standard, to suit type and size of sliding-door units.

I. Adjustable Shelf Supports: Two-pin locking plastic shelf rests complying with BHMA A156.9, Type B04013.

PART 3 - EXECUTION

3.1 EXAMINATION

A. Examine areas, with Installer present, for compliance with requirements for installation tolerances, location of framing and reinforcements, and other conditions affecting performance of the Work.

B. Proceed with installation only after unsatisfactory conditions have been corrected.

3.2 CASEWORK INSTALLATION

A. Grade: Install cabinets to comply with same grade as item to be installed.

B. Install casework level, plumb, and true; shim as required, using concealed shims. Where casework abuts other finished work, apply filler strips and scribe for accurate fit, with fasteners concealed where practical.

C. Base Cabinets: Set cabinets straight, level, and plumb. Adjust subtops within 1/16 inch (1.5 mm) of a single plane. Align similar adjoining doors and drawers to a tolerance of 1/16 inch (1.5 mm). Bolt adjacent cabinets together with joints flush, tight, and uniform.

D. Wall Cabinets: Hang cabinets straight, level, and plumb. Adjust fronts and bottoms within 1/16 inch (1.5 mm) of a single plane. Fasten to hanging strips, masonry, framing, wood blocking, or reinforcements in walls and partitions. Align similar adjoining doors to a tolerance of 1/16 inch (1.5 mm).

E. Fasten cabinets to adjacent cabinets and to masonry, framing, wood blocking, or reinforcements in walls and partitions to comply with the AWI's, AWMAC's, and WI's "Architectural Woodwork Standards."

F. Install hardware uniformly and precisely. Set hinges snug and flat in mortises unless otherwise indicated. Adjust and align hardware so moving parts operate freely and contact points meet accurately. Allow for final adjustment after installation.

G. Adjust casework and hardware so doors and drawers operate smoothly without warp or bind. Lubricate operating hardware as recommended by manufacturer.

3.3 CLEANING

A. Repair or remove and replace defective work as directed on completion of installation.

B. Clean finished surfaces, touch up as required, and remove or refinish damaged or soiled areas to match original factory finish, as approved by Architect.

END OF SECTION 123216

SECTION 123623.13 - PLASTIC-LAMINATE-CLAD COUNTERTOPS

PART 1 - GENERAL

1.1 RELATED DOCUMENTS

A. Drawings and general provisions of the Contract, including General and Supplementary Conditions and Division 01 Specification Sections, apply to this Section.

1.2 SUMMARY

A. Section includes plastic-laminate-clad countertops.

1.3 ACTION SUBMITTALS

A. Product Data: For each type of product.

1. Include data for fire-retardant treatment from chemical-treatment manufacturer and certification by treating plant that treated materials comply with requirements.

B. Shop Drawings: For plastic-laminate-clad countertops.

1. Include plans, sections, details, and attachments to other work. Detail fabrication and installation, including field joints.
2. Show locations and sizes of cutouts and holes for items installed in plastic-laminate-clad countertops.
3. Apply AWI Quality Certification Program label to Shop Drawings.

C. Samples for Initial Selection: For plastic laminates.

D. Samples for Verification: As follows:

1. Plastic Laminates: For each type, color, pattern, and surface finish required, 8 by 10 inches (200 by 250 mm) in size.
2. Fabrication Sample: For each type and profile of countertop required, provide one sample applied to core material with specified edge material applied to one edge.

1.4 INFORMATIONAL SUBMITTALS

A. Qualification Data: For Installer and Fabricator.

B. Product Certificates: For the following:

1. Composite wood and agrifiber products.
2. High-pressure decorative laminate.
3. Chemical-resistant, high-pressure decorative laminate.
4. Adhesives.

C. Quality Standard Compliance Certificates: AWI Quality Certification Program.

1. AWI QCP Project Number: 18.0841.

D. Evaluation Reports: For fire-retardant-treated materials, from ICC-ES.

1.5 QUALITY ASSURANCE

A. Fabricator Qualifications: Shop that employs skilled workers who custom fabricate products similar to those required for this Project and whose products have a record of successful in-service performance.

1. Shop Certification: AWI's Quality Certification Program accredited participant.

B. Installer Qualifications: AWI's Quality Certification Program accredited participant.

1.6 DELIVERY, STORAGE, AND HANDLING

A. Deliver countertops only after casework and supports on which they will be installed have been completed in installation areas.

B. Store countertops in areas where environmental conditions comply with requirements specified in "Field Conditions" Article.

C. Keep surfaces of countertops covered with protective covering during handling and installation.

1.7 FIELD CONDITIONS

A. Environmental Limitations: Do not deliver or install countertops until building is enclosed, wet-work is complete, and HVAC system is operating and maintaining temperature and relative humidity at levels planned for building occupants during the remainder of the construction period.

B. Environmental Limitations: Do not deliver or install countertops until building is enclosed, wet-work is complete, and HVAC system is operating and maintaining temperature between 60 and 90 deg F (16 and 32 deg C) and relative humidity between 25 and 55 percent during the remainder of the construction period.

C. Field Measurements: Where countertops are indicated to fit to other construction, verify dimensions of other construction by field measurements before fabrication and indicate measurements on Shop Drawings. Coordinate fabrication schedule with construction progress to avoid delaying the Work.

D. Established Dimensions: Where countertops are indicated to fit to other construction, establish dimensions for areas where countertops are to fit. Provide allowance for trimming at site, and coordinate construction to ensure that actual dimensions correspond to established dimensions.

PART 2 - PRODUCTS

2.1 PLASTIC-LAMINATE-CLAD COUNTERTOPS

A. Quality Standard: Unless otherwise indicated, comply with the "Architectural Woodwork Standards" for grades of plastic-laminate-clad countertops indicated for construction, finishes, installation, and other requirements.

1. Provide inspections of fabrication and installation together with labels and certificates from AWI certification program indicating that countertops comply with requirements of grades specified.
2. The Contract Documents contain requirements that are more stringent than the referenced quality standard. Comply with requirements of Contract Documents in addition to those of the referenced quality standard.

B. Grade: Custom.

C. High-Pressure Decorative Laminate: NEMA LD 3, Grade HGS.

1. Manufacturers: Subject to compliance with requirements, provide products by one of the following:

a. Formica Corporation.
b. Nevamar; a Panolam Industries International, Inc. brand.
c. Pionite; a Panolam Industries International, Inc. brand.
d. Wilsonart.

D. Colors, Patterns, and Finishes: Provide materials and products that result in colors and textures of exposed laminate surfaces complying with the following requirements:

1. PLAM-5: Wilsonart; Grey Glace 4142-60.

E. Edge Treatment: 3-mm (0.12 inch) PVC edging.

F. Core Material: Particleboard, MDF, or exterior-grade plywood, as selected by fabricator to comply with quality standard.

G. Core Material at Sinks: Particleboard made with exterior glue, MDF made with exterior glue, or exterior-grade plywood.

H. Core Thickness: 3/4 inch (19 mm).

1. Build up countertop thickness to 1-1/2 inches (38 mm) at front, back, and ends with additional layers of core material laminated to top.

I. Backer Sheet: Provide plastic-laminate backer sheet, NEMA LD 3, Grade BKL, on underside of countertop substrate.

2.2 WOOD MATERIALS

A. Wood Products: Provide materials that comply with requirements of referenced quality standard unless otherwise indicated.

1. Wood Moisture Content: 5 to 10 percent.

B. Composite Wood and Agrifiber Products: Provide materials that comply with requirements of referenced quality standard for each type of countertop and quality grade specified unless otherwise indicated.

1. MDF: Medium-density fiberboard, ANSI A208.2, Grade 130.
2. Particleboard: ANSI A208.1, Grade M-2 and Grade M-2-Exterior Glue.
3. Softwood Plywood: DOC PS 1.

2.3 MISCELLANEOUS MATERIALS

A. Adhesive for Bonding Plastic Laminate: As selected by fabricator to comply with requirements.

1. Adhesive for Bonding Edges: Hot-melt adhesive or adhesive specified above for faces.

2.4 FABRICATION

A. Sand fire-retardant-treated wood lightly to remove raised grain on exposed surfaces before fabrication.

B. Fabricate countertops to dimensions, profiles, and details indicated. Provide front and end overhang of 1 inch (25 mm) over base cabinets. Ease edges to radius indicated for the following:

1. Solid-Wood (Lumber) Members: 1/16 inch (1.5 mm) unless otherwise indicated.

C. Complete fabrication, including assembly, to maximum extent possible before shipment to Project site. Disassemble components only as necessary for shipment and installation. Where necessary for fitting at site, provide ample allowance for scribing, trimming, and fitting.

1. Trial fit assemblies at fabrication shop that cannot be shipped completely assembled. Install dowels, screws, bolted connectors, and other fastening devices that can be removed after trial fitting. Verify that various parts fit as intended, and check measurements of assemblies against field measurements before disassembling for shipment.

D. Shop cut openings to maximum extent possible to receive appliances, plumbing fixtures, electrical work, and similar items. Locate openings accurately, and use templates or roughing-in diagrams to produce accurately sized and shaped openings. Sand edges of cutouts to remove splinters and burrs.

1. Seal edges of cutouts by saturating with varnish.

PART 3 - EXECUTION

3.1 PREPARATION

A. Before installation, condition countertops to average prevailing humidity conditions in installation areas.

B. Before installing countertops, examine shop-fabricated work for completion and complete work as required, including removal of packing.

3.2 INSTALLATION

A. Grade: Install countertops to comply with same grade as item to be installed.

B. Assemble countertops and complete fabrication at Project site to the extent that it was not completed in the shop.

1. Provide cutouts for appliances, plumbing fixtures, electrical work, and similar items. Locate openings accurately, and use templates or roughing-in diagrams to produce accurately sized and shaped openings. Sand edges of cutouts to remove splinters and burrs.
2. Seal edges of cutouts by saturating with varnish.

C. Field Jointing: Where possible, make in the same manner as shop jointing, using dowels, splines, adhesives, and fasteners recommended by manufacturer. Prepare edges to be joined in shop so Project-site processing of top and edge surfaces is not required. Locate field joints where shown on Shop Drawings.

1. Secure field joints in countertops with concealed clamping devices located within 6 inches (150 mm) of front and back edges and at intervals not exceeding 24 inches (600 mm). Tighten according to manufacturer's written instructions to exert a constant, heavy-clamping pressure at joints.

D. Scribe and cut countertops to fit adjoining work, refinish cut surfaces, and repair damaged finish at cuts.

E. Fire-Retardant-Treated Wood: Handle, store, and install fire-retardant-treated wood to comply with chemical-treatment manufacturer's written instructions, including those for adhesives used to install woodwork.

F. Countertop Installation: Anchor securely by screwing through corner blocks of base cabinets or other supports into underside of countertop.

1. Install countertops level and true in line. Use concealed shims as required to maintain not more than a 1/8-inch-in-96-inches (3-mm-in-2400-mm)variation from a straight, level plane.
2. Secure backsplashes to tops with concealed metal brackets at 16 inches (400 mm) o.c. and to walls with adhesive.
3. Seal joints between countertop and backsplash, if any, and joints where countertop and backsplash abut walls with mildew-resistant silicone sealant or another permanently elastic sealing compound recommended by countertop material manufacturer.

3.3 ADJUSTING AND CLEANING

A. Repair damaged and defective countertops, where possible, to eliminate functional and visual defects. Where not possible to repair, replace countertops. Adjust joinery for uniform appearance.

B. Clean countertops on exposed and semiexposed surfaces.

C. Protection: Provide Kraft paper or other suitable covering over countertop surfaces, taped to underside of countertop at a minimum of 48 inches (1220 mm) o.c. Remove protection at Substantial Completion.

END OF SECTION 123623.13

SECTION 123661.16 - SOLID SURFACING COUNTERTOPS

PART 1 - GENERAL

1.1 RELATED DOCUMENTS

A. Drawings and general provisions of the Contract, including General and Supplementary Conditions and Division 01 Specification Sections, apply to this Section.

1.2 SUMMARY

A. Section Includes:

1. Solid surface material countertops.
2. Solid surface material backsplashes.
3. Solid surface material end splashes.
4. Solid surface window sills.

1.3 ACTION SUBMITTALS

A. Product Data: For countertop materials and sinks.

B. Shop Drawings: For countertops. Show materials, finishes, edge and backsplash profiles, methods of joining, and cutouts for plumbing fixtures.

1. Show locations and details of joints.
2. Show direction of directional pattern, if any.

C. Samples for Initial Selection: For each type of material exposed to view.

D. Samples for Verification: For the following products:

1. Countertop material, 6 inches (150 mm) square.
2. Wood trim, 8 inches (200 mm) long.
3. Grommet, full size.

1.4 INFORMATIONAL SUBMITTALS

A. Qualification Data: For fabricator.

1.5 CLOSEOUT SUBMITTALS

A. Maintenance Data: For solid surface material countertops to include in maintenance manuals. Include Product Data for care products used or recommended by Installer and names, addresses, and telephone numbers of local sources for products.

1.6 QUALITY ASSURANCE

A. Fabricator Qualifications: Shop that employs skilled workers who custom-fabricate countertops similar to that required for this Project, and whose products have a record of successful in-service performance.

B. Installer Qualifications: Fabricator of countertops.

1.7 FIELD CONDITIONS

A. Field Measurements: Verify dimensions of countertops by field measurements after base cabinets are installed but before countertop fabrication is complete.

1.8 COORDINATION

A. Coordinate locations of utilities that will penetrate countertops or backsplashes.

PART 2 - PRODUCTS

2.1 SOLID SURFACE COUNTERTOP MATERIALS

A. Solid Surface Material: Homogeneous-filled plastic resin complying with ICPA SS-1.

1. Manufacturers: Subject to compliance with requirements, provide products by one of the following:

a. E. I. du Pont de Nemours and Company.
b. LG Chemical, Ltd.
c. Meganite Inc.

2. Type: Provide Standard type unless Special Purpose type is indicated.
3. Integral Sink Bowls: Comply with CSA B45.5/IAPMO Z124.
4. Basis-of-Design Colors and Patterns:

a. SS-1: Meganite; Mottled Gray 932SA.
b. SS-2: Meganite; Silver Mist 219AR.

B. Particleboard: ANSI A208.1, Grade M-2 and Grade M-2-Exterior Glue.

C. Plywood: Exterior softwood plywood complying with DOC PS 1, Grade C-C Plugged, touch sanded.

2.2 COUNTERTOP FABRICATION

A. Fabricate countertops according to solid surface material manufacturer's written instructions and to the AWI/AWMAC/WI's "Architectural Woodwork Standards."

1. Grade: Custom.

B. Configuration:

1. Front: 1-1/2-inch (38-mm) laminated, slightly eased at top.

2. Backsplash: Straight, slightly eased at corner.
3. End Splash: Matching backsplash.

C. Countertops: 1/2-inch- (12.7-mm-) thick, solid surface material with front edge built up with same material.

D. Backsplashes: 1/2-inch- (12.7-mm-) thick, solid surface material.

E. Fabricate tops with shop-applied edges unless otherwise indicated. Comply with solid surface material manufacturer's written instructions for adhesives, sealers, fabrication, and finishing.

1. Fabricate with loose backsplashes for field assembly.
2. Install integral sink bowls in countertops in the shop.

F. Joints: Fabricate countertops without joints.

G. Where length of countertops exceeds length of materials: Fabricate countertops in sections for joining in field.

1. Joint Locations: Not within 18 inches (450 mm) of a sink or cooktop and not where a countertop section less than 36 inches (900 mm) long would result, unless unavoidable.
2. Splined Joints: Accurately cut kerfs in edges at joints for insertion of metal splines to maintain alignment of surfaces at joints. Make width of cuts slightly more than thickness of splines to provide snug fit. Provide at least three splines in each joint.

H. Cutouts and Holes:

1. Counter-Mounted Plumbing Fixtures: Prepare countertops in shop for field cutting openings for counter-mounted fixtures. Mark tops for cutouts and drill holes at corners of cutout locations. Make corner holes of largest radius practical.
2. Fittings: Drill countertops in shop for plumbing fittings, undercounter soap dispensers, and similar items.

2.3 ACCESSORIES

A. Wire-Management Grommets: Circular, molded-plastic grommets and matching plastic caps with slot for wire passage.

1. Outside Diameter: 2 inches (51 mm).
2. Color: Grey, to match counter.

2.4 INSTALLATION MATERIALS

A. Adhesive: Product recommended by solid surface material manufacturer.

B. Sealant for Countertops: Comply with applicable requirements in Section 079200 "Joint Sealants."

PART 3 - EXECUTION

3.1 EXAMINATION

A. Examine substrates to receive solid surface material countertops and conditions under which countertops will be installed, with Installer present, for compliance with requirements for installation tolerances and other conditions affecting performance of countertops.

B. Proceed with installation only after unsatisfactory conditions have been corrected.

3.2 INSTALLATION

A. Install countertops level to a tolerance of 1/8 inch in 8 feet (3 mm in 2.4 m), 1/4 inch (6 mm) maximum. Do not exceed 1/64-inch (0.4-mm) difference between planes of adjacent units.

B. Fasten countertops by screwing through corner blocks of base units into underside of countertop. Predrill holes for screws as recommended by manufacturer. Align adjacent surfaces and, using adhesive in color to match countertop, form seams to comply with manufacturer's written instructions. Carefully dress joints smooth, remove surface scratches, and clean entire surface.

C. Fasten subtops to cabinets by screwing through subtops into cornerblocks of base cabinets. Shim as needed to align subtops in a level plane.

D. Secure countertops to subtops with adhesive according to solid surface material manufacturer's written instructions. Align adjacent surfaces and, using adhesive in color to match countertop, form seams to comply with manufacturer's written instructions. Carefully dress joints smooth, remove surface scratches, and clean entire surface.

E. Bond joints with adhesive and draw tight as countertops are set. Mask areas of countertops adjacent to joints to prevent adhesive smears.

1. Install metal splines in kerfs in countertop edges at joints. Fill kerfs with adhesive before inserting splines and remove excess immediately after adjoining units are drawn into position.
2. Clamp units to temporary bracing, supports, or each other to ensure that countertops are properly aligned and joints are of specified width.

F. Install backsplashes and end splashes by adhering to wall and countertops with adhesive. Mask areas of countertops and splashes adjacent to joints to prevent adhesive smears.

G. Complete cutouts not finished in shop. Mask areas of countertops adjacent to cutouts to prevent damage while cutting. Make cutouts to accurately fit items to be installed, and at right angles to finished surfaces unless beveling is required for clearance. Ease edges slightly to prevent snipping.

1. Seal edges of cutouts in particleboard subtops by saturating with varnish.

H. Apply sealant to gaps at walls; comply with Section 079200 "Joint Sealants."

END OF SECTION 123661.16

SECTION 142400 - HYDRAULIC ELEVATORS

PART 1 - GENERAL

1.1 RELATED DOCUMENTS

A. Drawings and general provisions of the Contract, including General and Supplementary Conditions and Division 01 Specification Sections, apply to this Section.

1.2 SUMMARY

A. Section includes hydraulic passenger elevators.

B. Related Requirements:

1. Section 015000 "Temporary Facilities and Controls" for temporary use of elevators for construction purposes.
2. Section 042000 "Unit Masonry" for setting sleeves, inserts, and anchoring devices in masonry and for grouting elevator entrance frames installed in masonry walls.
3. Section 051200 "Structural Steel Framing" for the following:

    a. Hoist beams.

4. Section 055000 "Metal Fabrications" for the following:

    a. Attachment plates and angle brackets for supporting guide-rail brackets.
    b. Structural-steel shapes for subsills.
    c. Pit ladders.

5. Section 096813 "Tile Carpeting" for finish flooring in elevator cars.
6. Section 099123 "Interior Painting" for field painting of hoistway.
7. Section 271005 "Structured Cabling for Voice and Data – Inside Plant" for twisted pair conductors used for telephone service for elevators.
8. Section 283100 "Fire Detection and Alarm" for smoke detectors in elevator lobbies to initiate emergency recall operation and heat detectors in shafts and machine rooms to disconnect power from elevator equipment before sprinkler activation and for connection to elevator controllers.

1.3 DEFINITIONS

A. Definitions in ASME A17.1/CSA B44 apply to work of this Section.

1.4 ACTION SUBMITTALS

A. Product Data: Include capacities, sizes, performances, operations, safety features, finishes, and similar information. Include product data for car enclosures; hoistway entrances; and operation, control, and signal systems.

B. Shop Drawings:

1. Include plans, elevations, sections, and large-scale details indicating service at each landing; machine room layout; coordination with building structure; relationships with other construction; and locations of equipment.
2. Include large-scale layout of car-control station.
3. Indicate maximum dynamic and static loads imposed on building structure at points of support as well as maximum and average power demands.

C. Samples for Initial Selection: For finishes involving color selection.

D. Samples for Verification: For exposed car, hoistway door and frame, and signal equipment finishes, 3-inch- (75-mm-) square Samples of sheet materials and 4-inch (100-mm) lengths of running trim members.

1.5 INFORMATIONAL SUBMITTALS

A. Qualification Data: For Installer.

B. Manufacturer Certificates: Signed by elevator manufacturer, certifying that hoistway, pit, and machine room layout and dimensions, as shown on Drawings, and electrical service, as shown and specified, are adequate for elevator system being provided.

1.6 CLOSEOUT SUBMITTALS

A. Operation and Maintenance Data: For elevators to include in emergency, operation, and maintenance manuals.

1. Submit manufacturer's/installer's standard operation and maintenance manual, in accordance with ASME A17.1/CSA B44.

B. Inspection and Acceptance Certificates and Operating Permits: As required by authorities having jurisdiction for normal, unrestricted elevator use.

C. Continuing Maintenance Proposal: Submit a continuing maintenance proposal from Installer to Owner, in the form of a standard one-year maintenance agreement, starting on date initial maintenance service is concluded. State services, obligations, conditions, and terms for agreement period and for future renewal options.

1.7 QUALITY ASSURANCE

A. Installer Qualifications: Elevator manufacturer or an authorized representative who is trained and approved by manufacturer.

1.8 DELIVERY, STORAGE, AND HANDLING

A. Deliver, store, and handle materials, components and equipment in manufacturer's protective packaging. Store materials, components, and equipment off of ground, under cover, and in a dry location.

1.9 COORDINATION

A. Coordinate installation of sleeves, block outs, elevator equipment with integral anchors, and other items that are embedded in concrete or masonry for elevator equipment. Furnish templates, sleeves, elevator

equipment with integral anchors, and installation instructions and deliver to Project site in time for installation.

B. Coordinate locations and dimensions of other work specified in other Sections that relates to hydraulic elevators, including pit ladders; sumps and floor drains in pits; entrance subsills; electrical service; and electrical outlets, lights, and switches in hoistways, pits, and machine rooms.

1.10 WARRANTY

A. Manufacturer's Special Warranty: Manufacturer agrees to repair, restore, or replace elevator work that fails in materials or workmanship within specified warranty period.

1. Failures include, but are not limited to, operation or control system failure, including excessive malfunctions; performances below specified ratings; excessive wear; unusual deterioration or aging of materials or finishes; unsafe conditions; need for excessive maintenance; abnormal noise or vibration; and similar unusual, unexpected, and unsatisfactory conditions.
2. Warranty Period: Two years from date of Substantial Completion.

PART 2 - PRODUCTS

2.1 HYDRAULIC ELEVATOR MANUFACTURERS

A. Manufacturers: Subject to compliance with requirements, provide products by one of the following:

1. Elevator Controller:

a. Smartrise
b. Elevator Controls
c. Virginia Controls
d. Motion Control Engineering

2. Cab and Entrances

a. Columbia
b. H & B
c. Kohtler

3. Fixtures

a. Epco
b. Innovation
c. Monitor

2.2 PERFORMANCE REQUIREMENTS

A. Regulatory Requirements: Comply with ASME A17.1/CSA B44.

B. Accessibility Requirements: Comply with Section 407 in the United States Access Board's ADA-ABA Accessibility Guidelines and with ICC A117.1.

C. Stretcher Requirements: Provide elevator system accommodating a stretcher in horizontal position measuring not less than 24 inches by 84 inches.

2.3 ELEVATORS

A. Elevator System, General: Manufacturer's standard elevator systems. Unless otherwise indicated, manufacturers' standard components shall be used, as included in standard elevator systems and as required for complete system.

B. Elevator Description:

1. Type: Holeless, beside-the-car, single-acting, dual cylinder.
2. Rated Load: 3500 lb (1589 kg).
3. Rated Speed: 75 or 80 fpm (0.38 or 0.41 m/s).
4. Operation System: Single automatic operation.
5. Auxiliary Operations:

    a. Battery-powered lowering.
    b. Automatic operation of lights and ventilation fans.

6. Security Features: Keyswitch activation of hall push button.
7. Car Enclosures:

    a. Inside Width: 60 inches (1524 mm) from side wall to side wall.
    b. Inside Depth: 88 inches (2235 mm) from back wall to front wall (return panels).
    c. Inside Height: Not less than 93 inches (2362 mm) to underside of ceiling.
    d. Front Walls (Return Panels): Satin stainless steel, No. 4 finish with integral car door frames.
    e. Car Fixtures: Satin stainless steel, No. 4 finish.
    f. Side and Rear Wall Panels: Plastic laminate.
    g. Reveals: Satin stainless steel, No. 4 finish.
    h. Door Faces (Interior): Satin stainless steel, No. 4 finish.
    i. Door Sills: Aluminum or nickel silver.
    j. Ceiling: Reflective metallic-finished plastic laminate, resembling stainless steel or satin stainless steel, No. 4 finish.
    k. Handrails: 1/2 by 2 inches (13 by 50 mm) rectangular satin stainless steel, No. 4 finish, at sides and rear of car.
    l. Floor prepared to receive carpet flooring (specified in Section 096813 "Tile Carpeting").

8. Hoistway Entrances:

    a. Width: 42 inches (1067 mm).
    b. Height: 84 inches (2134 mm).
    c. Type: Single-speed side sliding.
    d. Frames: Satin stainless steel, No. 4 finish.
    e. Doors: Satin stainless steel, No. 4 finish.
    f. Sills: Aluminum or nickel silver.

9. Hall Fixtures: Satin stainless steel, No. 4 finish.
10. Additional Requirements:

    a. Provide inspection certificate in each car, mounted under acrylic cover with frame made from satin stainless steel, No. 4 finish.
    b. Provide hooks for protective pads and one complete set(s) of full-height protective pads.

2.4 SYSTEMS AND COMPONENTS

A. Pump Units: Positive-displacement type with a maximum of 10 percent variation between no load and full load and with minimum pulsations.

1. Motor shall have a soft start rated at 120sph.

B. Power Requirements:

1. Main Power Supply: 480 volts, 3 phase, 60 Hz.
2. Lighting Power Supply: 120 volts, 1 phase, 15 amps, 60 Hz.

C. Hydraulic Silencers: System shall have hydraulic silencer containing pulsation-absorbing material in blowout-proof housing at pump unit.

D. Piping: Size, type, and weight of piping as recommended by elevator manufacturer, with flexible connectors to minimize sound and vibration transmissions from power unit.

E. Hydraulic Fluid: Elevator manufacturer's standard fire-resistant fluid with additives as needed to prevent oxidation of fluid, corrosion of cylinder and other components, and other adverse effects.

F. Inserts: Furnish required concrete and masonry inserts and similar anchorage devices for installing guide rails, machinery, and other components of elevator work. Device installation is specified in another Section.

G. Car Frame and Platform: Welded steel units.

2.5 OPERATION SYSTEMS

A. General: Provide manufacturer's standard microprocessor operation system as required to provide type of operation indicated.

B. Auxiliary Operations:
1. Single-Car Battery-Powered Lowering: When power fails, car is lowered to the lowest floor, opens its doors, and shuts down. System includes rechargeable battery and automatic recharging system.
2. Automatic Operation of Lights and Fan: When elevator is stopped and unoccupied with doors closed, lighting, ventilation fan, and cab displays are de-energized after 5 minutes and are re-energized before car doors open.

C. Security Features: Security features shall not affect emergency firefighters' service.

1. Keyswitch Operation: Push buttons are activated and deactivated by security keyswitches at hall push-button stations. Key is removable in either position.

2.6 DOOR-REOPENING DEVICES

A. Infrared Array: Provide door-reopening device with uniform array of 36 or more microprocessor-controlled, infrared light beams projecting across car entrance. Interruption of one or more light beams shall cause doors to stop and reopen.

B. Nudging Feature: After car doors are prevented from closing for predetermined adjustable time, through activating door-reopening device, a loud buzzer shall sound and doors shall begin to close at reduced kinetic energy.

2.7 CAR ENCLOSURES

A. General: Provide enameled- or powder-coated-steel car enclosures to receive removable wall panels, with car roof, access doors, power door operators, and ventilation.

1. Provide standard railings complying with ASME A17.1/CSA B44 on car tops where required by ASME A17.1/CSA B44.

B. Materials and Finishes: Manufacturer's standards, but not less than the following:

1. Subfloor: Exterior, underlayment-grade plywood, not less than 5/8-inch (15.9-mm) nominal thickness.
2. Floor Finish: Specified in Division 09 Section “Tile Carpeting.”
3. Plastic-Laminate Wall Panels: Plastic laminate adhesively applied to 1/2-inch (13-mm) fire-retardant-treated particleboard with plastic-laminate panel backing and manufacturer's standard protective edge trim. Panels have a flame-spread index of 25 or less, when tested according to ASTM E 84. Plastic-laminate color, texture, and pattern as selected by Architect from plastic-laminate manufacturer's full range.
4. Fabricate car with recesses and cutouts for signal equipment.
5. Fabricate car door frame integrally with front wall of car.
6. Stainless-Steel Doors: Flush, hollow-metal construction; fabricated from stainless-steel sheet.
7. Sight Guards: Provide sight guards on car doors.
8. Sills: Extruded or machined metal, with grooved surface, 1/4 inch (6.4 mm) thick.
9. Luminous Ceiling: Fluorescent light fixtures and ceiling panels of translucent acrylic or other permanent rigid plastic.
10. Metallic-Finish, Plastic-Laminate Ceiling: Flush panels, with incandescent downlights in the center of each panel. Align ceiling panel joints with joints between wall panels.
11. Light Fixture Efficiency: Not less than 35 lumens/W.
12. Ventilation Fan Efficiency: Not less than 3.0 cfm/W (1.4 L/s per W).

2.8 HOISTWAY ENTRANCES

A. Hoistway Entrance Assemblies: Manufacturer's standard horizontal-sliding, door-and-frame hoistway entrances complete with track systems, hardware, sills, and accessories. Frame size and profile shall accommodate hoistway wall construction.

1. Where gypsum board wall construction is indicated, frames shall be self-supporting with reinforced head sections.

B. Materials and Fabrication: Manufacturer's standards, but not less than the following:

1. Stainless-Steel Frames: Formed from stainless-steel sheet.
2. Stainless-Steel Doors: Flush, hollow-metal construction; fabricated from stainless-steel sheet.
3. Sight Guards: Provide sight guards on doors matching door edges.
4. Sills: Extruded or machined metal, with grooved surface, 1/4 inch (6.4 mm) thick.
5. Nonshrink, Nonmetallic Grout: Factory-packaged, nonstaining, noncorrosive, nongaseous grout complying with ASTM C 1107/C 1107M.

2.9 SIGNAL EQUIPMENT

A. General: Provide hall-call and car-call buttons that light when activated and remain lit until call has been fulfilled. Provide buttons and lighted elements illuminated with LEDs.

B. Car-Control Stations: Provide manufacturer's standard recessed car-control stations. Mount in return panel adjacent to car door unless otherwise indicated.

1. Mark buttons and switches for required use or function. Use both tactile symbols and Braille.
2. Provide "No Smoking" sign matching car-control station, either integral with car-control station or mounted adjacent to it, with text and graphics as required by authorities having jurisdiction.

C. Emergency Communication System: Two-way voice communication system, with visible signal, which dials preprogrammed number of monitoring station and does not require handset use. System is contained in flush-mounted cabinet, with identification, instructions for use, and battery backup power supply.

D. Firefighters' Two-Way Telephone Communication Service: Provide telephone jack in each car and required conductors in traveling cable for firefighters' two-way telephone communication service specified in Section 283100 " Fire Detection and Alarm."

E. Car Position Indicator: Provide illuminated, digital-type car position indicator, located above car door or above car-control station. Also, provide audible signal to indicate to passengers that car is either stopping at or passing each of the floors served. Include travel direction arrows if not provided in car-control station.

F. Hall Push-Button Stations: Provide one hall push-button station at each landing.

1. Provide units with flat faceplate for mounting with body of unit recessed in wall.
2. Equip units with buttons for calling elevator and for indicating applicable direction of travel.
3. Provide keyswitch override to activate or deactivate push buttons.
4. Provide telephone jack in each unit for firefighters' two-way telephone communication service specified in Section 283100 " Fire Detection and Alarm."

G. Hall Lanterns: Units with illuminated arrows; however, provide single arrow at terminal landings. Provide the following:

1. Units with flat faceplate for mounting with body of unit recessed in wall and with illuminated elements projecting from faceplate for ease of angular viewing.

H. Hall Annunciator: With each hall lantern, provide audible signals indicating car arrival and direction of travel. Signals sound once for up and twice for down.

1. At manufacturer's option, audible signals may be placed on cars.

I. Hall Position Indicators: Provide illuminated, digital-display-type position indicators, located above hoistway entrance at ground floor.

1. Provide units with flat faceplate for mounting and with body of unit recessed in wall.
2. Integrate ground-floor hall lanterns with hall position indicators.

J. Emergency Pictorial Signs: Fabricate from materials matching hall push-button stations, with text and graphics as required by authorities having jurisdiction, indicating that in case of fire, elevators are out of service and exits should be used instead. Provide one sign at each hall push-button station unless otherwise indicated.

2.10 FINISH MATERIALS

A. Stainless-Steel Sheet: ASTM A 240/A 240M, Type 304.

B. Stainless-Steel Bars: ASTM A 276, Type 304.

C. Stainless-Steel Tubing: ASTM A 554, Grade MT 304.

D. Aluminum Extrusions: ASTM B 221 (ASTM B 221M), Alloy 6063.

E. Nickel Silver Extrusions: ASTM B 151/B 151M, Alloy UNS No. C74500 or No. C77600.

F. Plastic Laminate: High-pressure type complying with NEMA LD 3, Type HGS for flat applications and Type BKV for panel backing.

PART 3 - EXECUTION

3.1 EXAMINATION

A. Examine elevator areas, with Installer present, for compliance with requirements for installation tolerances and other conditions affecting performance of the Work. Verify critical dimensions and examine supporting structure and other conditions under which elevator work is to be installed.

B. Prepare written report, endorsed by Installer, listing conditions detrimental to performance of the Work.

C. Proceed with installation only after unsatisfactory conditions have been corrected.

3.2 INSTALLATION

A. Install cylinder plumb and accurately centered for elevator car position and travel. Anchor securely in place, supported at pit floor and braced at intervals as needed to maintain alignment. Anchor cylinder guides at spacing needed to maintain alignment and avoid overstressing guides.

B. Welded Construction: Provide welded connections for installing elevator work where bolted connections are not required for subsequent removal or for normal operation, adjustment, inspection, maintenance, and replacement of worn parts. Comply with AWS workmanship and welding operator qualification standards.

C. Sound Isolation: Mount rotating and vibrating equipment on vibration-isolating mounts to minimize vibration transmission to structure and structure-borne noise due to elevator system.

D. Lubricate operating parts of systems as recommended by manufacturers.

E. Alignment: Coordinate installation of hoistway entrances with installation of elevator guide rails for accurate alignment of entrances with car. Where possible, delay installation of sills and frames until car is operable in shaft. Reduce clearances to minimum, safe, workable dimension at each landing.

F. Leveling Tolerance: 1/4 inch (6 mm), up or down, regardless of load and travel direction.

G. Set sills flush with finished floor surface at landing. Fill space under sill solidly with nonshrink, nonmetallic grout.

H. Locate hall signal equipment for elevators as follows unless otherwise indicated:

1. Place hall lanterns either above or beside each hoistway entrance.
2. Mount hall lanterns at a minimum of 72 inches (1829 mm) above finished floor.

3.3 FIELD QUALITY CONTROL

A. Acceptance Testing: On completion of elevator installation and before permitting elevator use (either temporary or permanent), perform acceptance tests as required and recommended by ASME A17.1/CSA B44 and by governing regulations and agencies.

B. Advise Owner, Architect, and authorities having jurisdiction in advance of dates and times that tests are to be performed on elevators.

3.4 PROTECTION

A. Temporary Use: Comply with the following requirements for elevator used for construction purposes:

1. Provide car with temporary enclosure, either within finished car or in place of finished car, to protect finishes from damage.
2. Provide strippable protective film on entrance and car doors and frames.
3. Provide padded wood bumpers on entrance door frames covering jambs and frame faces.
4. Provide other protective coverings, barriers, devices, signs, and procedures as needed to protect elevator and elevator equipment.
5. Do not load elevators beyond their rated weight capacity.
6. Engage elevator Installer to provide full maintenance service. Include preventive maintenance, repair or replacement of worn or defective components, lubrication, cleanup, and adjustment as necessary for proper elevator operation at rated speed and capacity. Provide parts and supplies same as those used in the manufacture and installation of original equipment.
7. Engage elevator Installer to restore damaged work, if any, so no evidence remains of correction. Return items that cannot be refinished in the field to the shop, make required repairs and refinish entire unit, or provide new units as required.

3.5 DEMONSTRATION

A. Engage a factory-authorized service representative to train Owner's maintenance personnel to operate, adjust, and maintain elevator(s).

B. Check operation of elevator with Owner's personnel present before date of Substantial Completion and again not more than one month before end of warranty period. Determine that operation systems and devices are functioning properly.

3.6 MAINTENANCE

A. Initial Maintenance Service: Beginning at Substantial Completion, maintenance service shall include 12 months' full maintenance by skilled employees of elevator Installer. Include monthly preventive maintenance, repair or replacement of worn or defective components, lubrication, cleaning, and adjusting as required for proper elevator operation. Parts and supplies shall be manufacturer's authorized replacement parts and supplies.

1. Perform maintenance during normal working hours.

2. Include 24-hour-per-day, 7-day-per-week emergency callback service with response time of two hours or less.

END OF SECTION 142400