SECTION 27 10 00

STRUCTURED CABLING

Table of Contents

PART 1 Scope 2
PART 2 Process 2
PART 3 Executive Summary 2
PART 4 Objective 3
PART 5 Credits 3
PART 6 Introduction 3
PART 7 Procedures 6
PART 8 Horizontal Distribution System 6
PART 9 Communications/Data Rooms/Closets (General) 9
PART 10 MDF & IDF Product Specifications 17
PART 11 Information Outlets 24
PART 12 Cable Routing Systems 27
PART 13 Cabling-General 28
PART 14 Horizontal CABLING - Category 6 UTP Data 29
PART 15 Vertical Distribution Systems 31
PART 16 Campus Cabling 34
PART 17 Patch Cables 35
PART 18 Fire Stop - Penetration Sealant 37
PART 19 Testing 38
PART 20 Appendix A – Communications Planning Checklist 42
PART 21 Appendix B - Cable Installation Checklist 43
PART 22 Appendix C - Quality Assurance 44
PART 23 Appendix D - Codes, Regulations and Standards 44
PART 24 Appendix E - Warranty 44
PART 25 Appendix f - Bid/Quote Response Format 44
PART 26 Appendix g —Certified Contractor List 44

These standards are adopted by the Department of Technology and Information (DTI), through the Technology and Architecture Standards Committee (TASC), and are applicable to all Information Technology use throughout the State of Delaware. Any questions or comments should be directed to dti_tasc@state.de.us.

PART 1 SCOPE

A. Areas Covered: This specification covers the practices and installation requirements for Voice, Data, CATV cabling and support structures including conduits and raceways, Voice and Data rooms and closets. With respect to all of the above mentioned items covered in this document, this document shall be considered the specification that shall be followed. If it appears to contradict any other part(s) of the bidding/construction documents the most stringent requirements shall be adhered to unless otherwise authorized by the Architect/Engineer in writing.

B. Environments: This specification applies to all State owned and leased building and office spaces. It is concerned with all Data, Voice and CATV cabling projects, whether they are for new construction or revisions additions and upgrades to existing systems.

PART 2 PROCESS

A. Adoption: These specifications have been adopted by the Department of Technology and Information (DTI) through the Technology and Architecture Standards Committee (TASC) and are applicable to all Information Technology use throughout the State of Delaware.

B. Contractors: Contractors or other third parties are required to comply with these specifications when proposing technology solutions to DTI or other State entities. Failure to do so could result in rejection by the Delaware Technology Investment Council. For further guidance, or to seek review of a component that is not rated below, contact the TASC at dti_tasc@state.de.us.

C. Contact us: Any questions or comments should be directed to dti_tasc@state.de.us.

PART 3 EXECUTIVE SUMMARY

Because of ever-advancing industry standards and new alliances between cable and hardware manufactures and vendors this document is issued to enhance and clarify the State of Delaware's wiring and cabling standards and specifications for structured cabling systems. Approved contractors under State of Delaware Contract # 05-441-TL are required to adhere to these specifications and standards.

The structured cabling system will support voice, data, and imaging applications within State owned and leased public school facilities. This document describes the structured cabling system requirements to be met in the proposals for communications cabling by vendors and contractors. These requirements encompass all materials, design, engineering, installation, supervision, and training services for a structured cabling system.

The following are approved manufacturers of the structured cabling systems that can be bid for new construction and whole building renovations where all building structured cabling wiring is replaced.

- Hubbell Premise Wiring
- Ortronics
- Panduit
- Systimax

A. Terms and Conditions of Bids/quotes

1. An approved Contractors bid should be based on the materials, systems, equipment, Standards and Specifications described in this document and in the bid response format of the attached example. Refer to Appendix G. All bids must be submitted in accordance with the specifications and information contained herein, as well as with any addenda, if required.
2. The bid package shall be accompanied by a presale warranty commitment, binding the Installation Contractor and Manufacturer to the customer-selected extended warranty package as described in State Contract # 05-441-TL page 21 section 3) paragraph b).
3. At any point in time, should you require clarification or have any questions pertaining to the content of this document, please call The State of Delaware Department of Technology and Information (DTI). 302-739-9500

PART 4 OBJECTIVE

To maximize the usefulness of this document, access to the various TIA/EIA (Telecommunications Industry Association/Electronic Industries Alliance), IEEE (Institute of Electrical and Electronics Engineers), BISCI, (Building Industry Consulting Service International), NEC (National Electrical Code), NFPA (National Fire Protection Association) Communications Standards, and implementation and installation Manuals for further reference is required. This document assumes that users have communications knowledge and training in all aspects of design, implementation, installation, and testing of a Voice/Data communications system.

This document does not address safety issues associated with use. It is the individual contractors' responsibility to use established and appropriate safety and health practices and to determine the applicability of all regulations.

PART 5 CREDITS

Communications Cabling Construction
Developed by:
State of Delaware Department of Technology & Information
801 Silver Lake Blvd. Dover, DE
19904

The content of this document is drawn from experience, as well as other documents and manuals, including the following:

- NEC 2011 Code book
- NFPA-70 Publications
- TIA/EIA Communications Building Wiring Standards
- IEEE Publications & Standards
- BICSI Communications Distribution Design and Installation Publications
- MOTOROLA R56 Standards and Guideline for Communications
- Various Manufactures Publications and Requirements

PART 6 INTRODUCTION

The Structured Universal Cabling System installed for the Delaware Center for Educational Technology (DCET) of the State of Delaware is designed to meet known and anticipated technology needs within the school system. An advanced building cabling system provides for more than communication services; it provides an infrastructure for an institution's entire communications network. Instead of being a basic utility, it is as important as the high-tech systems that transmit signals over it and is an integral component of the State's overall information network.

These designs provide a universal and flexible cabling system for workstations, conference rooms, and

These standards are adopted by the Department of Technology and Information (DTI), through the Technology and Architecture Standards Committee (TASC), and are applicable to all Information Technology use throughout the State of Delaware. Any questions or comments should be directed to dti_tasc@state.de.us.

laboratories. Today's cabling system must be multi- functional and provide service for telephones, computers, fax machines, LANs, WANs, broad band fiber optic and coaxial systems (CATV, SATV, CCTV.), Data Centers, computer-aided design workstations, Audio Video systems (AV), and other technologies. For a cabling system to be capable of meeting today's technology and institutional demands, it must have high bandwidth capacity and transmission speed while being extremely flexible.

This wiring architecture incorporates the applicable ANSI/EIA/TIA standards, BICSI guidelines and the latest technologies. This cabling distribution plan can integrate all types of systems from a variety of vendors. The design uses a subsystem approach, which allows for changes in the system without affecting other parts of the system. The Main Distribution Frame (MDF) and Intermediate Distribution Frame (IDF) Room equipment racks are designed to allow for growth, and the cable routing is accomplished through the provision of cable trays, conduits, sleeves, raceways, and cable hangers where required. Ease of administration and recordkeeping for moves and changes is readily apparent, as is the flexibility that a structured cabling system provides.

The wiring medium for the Communications Cable Network consists of Category 6 24AWG Unshielded Twisted Pair (UTP) for station cabling and multi pair twisted copper for backbone cabling to support low-speed voice or Data, Category 6 for high speed LAN technologies, and 62.5/125 micron multi-mode fiber optic cable and 50/125 micron multi-mode for even higher bandwidth requirements. The unshielded twisted pair (UTP) Category 6 LAN cables can support Data transmission rates of 100, 250 and 500 Mb/Sec respectively according to EIA/TIA Standards and manufacturers' specifications. These leading edge components, combined with the open wiring architecture, provide the technology, flexibility, and modularity that allow the system to grow and change to meet changing needs.

The central distribution location of the system is the Fiber Optic, coaxial and Copper Main Distribution Frame (MDF) located within the centrally located MDF/IDF Room of each building. Various fiber optic, coaxial and copper riser cables terminate on the MDF and extend to the Communications Rooms/Closets (IDFs) located throughout the buildings. Each building typically has one MDF/IDF Room and a varying number of IDF rooms/closets dictated by the horizontal station cabling limitation of 100 meters for high performance cable. The distance from the information outlet to the termination within the IDF is limited to 90 meters (the permanent link). The IDF room/closet houses the Intermediate Distribution Frame (IDF), Copper and Fiber Optic IDF Patch Panels, Local Area Network (LAN) equipment, and other electronics. Both the riser cables and the horizontal station cables feeding the floor's workstations information outlets terminate in the IDF on Data patch panels, Voice 110 hardware, and Fiber Optic Patch Panels. These termination points act as the cross-connect point between the MDF and the floor that is being served. Large floors are divided into zones, via an imaginary line, with each zone being served by its respective IDF room/closet. (See figure 1)

Each work area and workstation is served by an information outlet, which provides the jacks for plugging in telephones, computers, broad band coaxial systems, fax machines, modems, and other devices at the desktop. The information outlets are served by varying sets of cables consisting of fiber optic and copper technologies, which originate in the IDF Room. IDF outlets are typically displayed as varying types of triangles (shaded, half-shaded, etc.) on project drawings. (See figure 2)

A subsystem architectural approach, using the latest technologies, provides a comfortable level of assurance that the system will support new applications and industry standards as they emerge.

FIGURE 1 – Example only

These standards are adopted by the Department of Technology and Information (DTI), through the Technology and Architecture Standards Committee (TASC), and are applicable to all Information Technology use throughout the State of Delaware. Any questions or comments should be directed to dti_tasc@state.de.us.

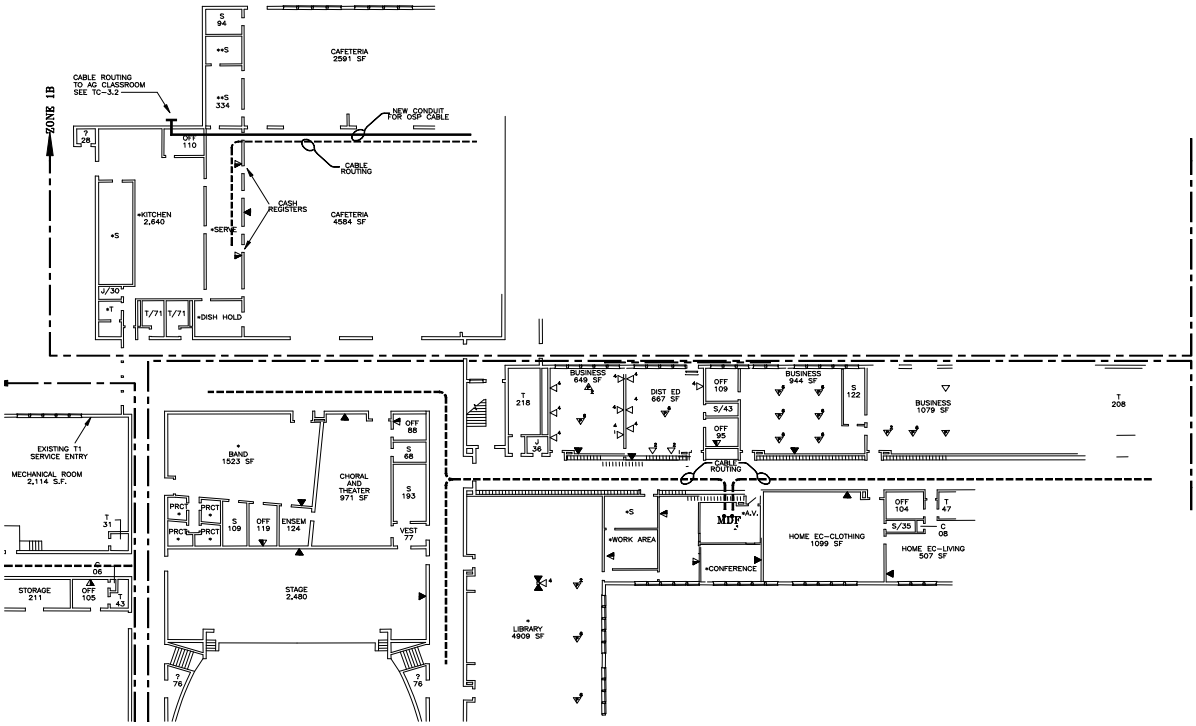

FIGURE 2 - Example Only

These standards are adopted by the Department of Technology and Information (DTI), through the Technology and Architecture Standards Committee (TASC), and are applicable to all Information Technology use throughout the State of Delaware. Any questions or comments should be directed to dti_tasc@state.de.us.

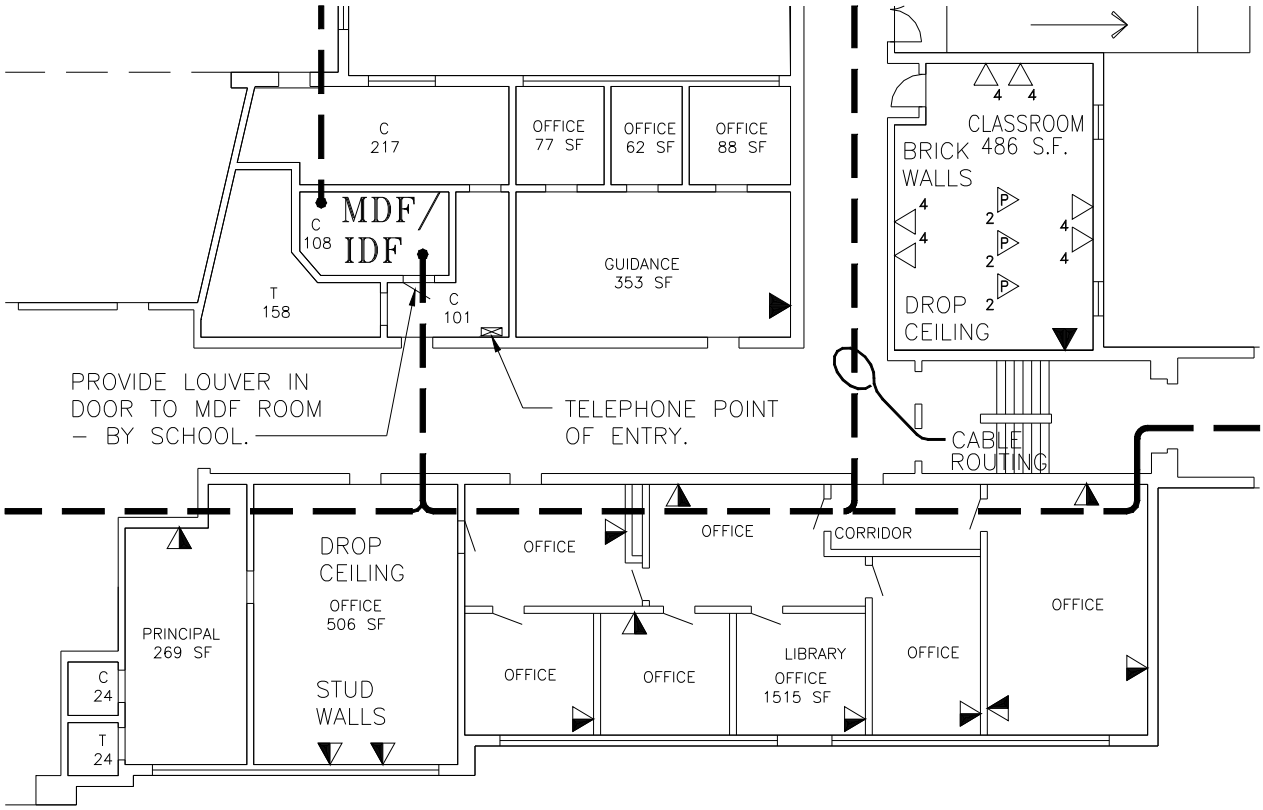

PART 7 PROCEDURES

Not used.

PART 8 HORIZONTAL DISTRIBUTION SYSTEM

The horizontal structured cable plant is the portion of the communications wiring system that extends from the information outlet to the Communications/Data room/closet.

A. Horizontal Distribution System General

1. The horizontal distribution system includes the:
   - Information outlet at the workstation
   - Cables connecting the workstation to the Communications/Data room/closet
   - Intermediate routing and distribution systems
2. The horizontal distribution system shall be configured in a star topology. All communications outlets within a work area shall be connected to a single Communications/Data room/closet, as defined by the zone concept.
3. This infrastructure must serve all of the Communications requirements of the Owner.
4. Communications applications served by the horizontal system shall include:

These standards are adopted by the Department of Technology and Information (DTI), through the Technology and Architecture Standards Committee (TASC), and are applicable to all Information Technology use throughout the State of Delaware. Any questions or comments should be directed to dti_tasc@state.de.us.

- Voice (e.g., telephones)
- Data (e.g., terminal connectivity, etc.)
- Local area networks (e.g. Ethernet)
- Audio & Video (e.g., CATV and video conferencing)
- Graphics & Imaging

5. All Horizontal Workstation Communications and broad band coaxial system cabling shall be "home-run" from the information outlet location to the termination point within the corresponding IDF or MDF/IDF room.

6. Horizontal cable paths will be in a "streets and avenues" manner, typically following main walkways.

7. Horizontal cables are to be fastened onto hangers five feet apart with all cables bundled with tie wraps, and are to have a small amount of slack visible.

8. Cables shall not rest on any structures or the hung ceiling. Cables shall not to be fastened to ducts, pipes, conduits, or any other structures. Cable bundles shall be secured to the slab overhead to avoid any conflict with or EMI from flexible electrical conduits, transformers, motors, etc.

9. Cabling shall be run to workstation and other outlets through cavities in the dry wall and openings in sheet metal or wooden studs within the dry wall construction. The sheet metal studs will not have gaskets for this purpose, so it is the Contractor's responsibility to exercise extreme care in snaking cable through these areas, so as to avoid damage to the cable jacketing.

10. The building's horizontal wiring plan is to be installed on all floors from the information outlet to the termination point within the associated IDF/MDF Room.

11. Horizontal cable will be installed onto “J” hooks or equivalent in the ceiling or tops of walls near ceiling. Cables are to be fastened to “J” hooks or equivalent every 5 feet. The cable contractor is to provide and furnish the “J” hooks.

12. All cabling provided for this project under this specification and associated drawings shall be plenum-rated.

13. Outside of the MDF/IDF and IDFs, all cabling is to be run within walls and above ceilings in a concealed fashion. In rare instances where cabling cannot be run in a concealed fashion, it shall be run in appropriately sized EMT conduit in as inconspicuous a manner as possible and or where directed on drawings. All outlets shall be provided with recessed, rigid metal boxes when installed within ceilings and walls. In cases where exposed EMT is used, the rigid metal boxes shall be surface mounted. In the case of cabling to be run in CMU walls, it shall be run in appropriately sized EMT within the CMU walls.

B. Horizontal Communications Cable Specification

1. For each type of information outlet indicated on the drawings attached to the work order, the contractor shall furnish, install, and test all of the following equipment.

2. All Category 6 cabling is to be handled and terminated in accordance with the Manufacturer’s Premises Communications Application Bulletin titled “High Performance UTP Installation Guide.”

3. All Fiber Optic Cabling is to be handled and terminated in accordance with the Manufacturer’s Application Bulletin titled “Premise Wiring Fiber Optic Cable Installation Guidelines.”

These standards are adopted by the Department of Technology and Information (DTI), through the Technology and Architecture Standards Committee (TASC), and are applicable to all Information Technology use throughout the State of Delaware. Any questions or comments should be directed to dti_tasc@state.de.us.

4. In addition to the above manufacturer's standards, all applicable EIA/TIA Category 6 and Fiber Optic Cable standards are to be strictly adhered to.

5. The fiber optic cable is to be connectorized on both ends with an SC type connector.

6. The contractor is to use Plenum cable for all station four-pair copper, coaxial, and two-strand fiber cabling. Plan routes to ensure that the proposed route on the plans falls within the EIA/TIA distance limitations (90 meters after termination) for horizontal cabling.

7. Contractor will provide all raceway fittings to allow for level and plumb routes from ceiling to information outlet. Proper fill ratios must be observed. Contractor may reference the manufacturer's catalogs or specifications for correct fittings and fill ratios. Contractor must use all accessory fittings required in order to build a neat and functional installation. This same method will apply to routing horizontal cables to classroom outlets where ceilings are not accessible.

C. Termination of Coaxial Cables

The RG-6U Plenum Cable and the RG11U Plenum Cable is to be terminated with F type connector or connectors.

D. Horizontal IDF Station Cable Terminations For Classrooms and Offices

1. The IDF Room side of the Category 6 four pair cables serving voice jacks will be punched down on the corresponding IDF Room wall-mounted frame on 110 Cat 6 field terminated 300-pair cross-connect terminal blocks.

2. The IDF Room side of the Category 6 four-pair cables serving data jacks will be punched down on individual 110 (Category 6) 24 and 48 Port RJ45 modular patch panels, 568B wired. The CAT 6 patch panels will be mounted in the relay racks within the IDF rooms.

3. In locations that have wall-mounted racks, the contractor is to use the Cat 6 "hinged down" patch panels with associated cable management. In cases where the "hinged down" series is required, the contractor is to take care to dress the cables neatly and allow for future access to the rear of the panel.

4. The drawings indicate which patch panel is to be used at each location.

5. The RG6U Coaxial Station cable serving coaxial jacks will be terminated onto a wall mounted "F" Connector Patch Panel located in the IDF/MDF Rooms.

6. The IDF Room side of the two-strand Fiber Optic cables serving fiber optic jacks shall be terminated on Fiber Optic Patch Panels as shown in the drawings.

7. The Contractor will provide Fiber patch panels and mount them in relay racks within the IDF rooms as indicated on the drawings.

8. The contractor is to provide wire management panels where and as shown on the drawings. The drawings indicate which patch panel is to be used at each location. Contractor is to label both the front and the rear of the patch panels. The terminations are to follow this sequence: Workstation Room#-Outlet#. Example (B101-01, B101-02, B101-03, B102-01, B102-02, etc.)

These standards are adopted by the Department of Technology and Information (DTI), through the Technology and Architecture Standards Committee (TASC), and are applicable to all Information Technology use throughout the State of Delaware. Any questions or comments should be directed to dti_tasc@state.de.us.

E. Zones

1. A zone is a contiguous area in which all horizontal wiring is homed to a single communications closet.
2. To maintain an orderly, understandable wiring system, it is imperative that the horizontal distribution system be structured in zones.
3. Within a zone, all communications wiring is run to a single communications closet.
4. Other zones use different Communications/Data rooms/closets. Cross-zone horizontal wiring is prohibited. Connections between zones are provided via the vertical distribution system.

PART 9 COMMUNICATIONS/DATA ROOMS/CLOSETS (GENERAL)

The Communications/Data room/closet is a concentration point for communications and LAN services. In this room, premise wiring and cabling are terminated and cross-connected. In addition, active networking devices such as LAN hubs or switches are placed here. Communications/Data rooms/closets provide a safe area for housing distribution cabling, premise equipment, and termination fields. These rooms/closets are a focal point for communications services.

In addition to supporting in-house connectivity, the MDF Communications/Data room/closet often provides a termination point for the local telephone company. The entrance facility, or demarcation point (de-mark), is the location where outside communications services, such as copper telephone lines, fiber optic Data circuits, and CATV, are delivered to the building. Typically, distribution of communications services within the building originates at this point.

The following section details the basic requirements for a Communications/Data rooms/closets.

A. Design Guidelines

Not Used

B. General Room Requirements

1. Grounding

- Most Communications and Data equipment requires bounding and grounding of equipment cabinets. Do not use plumbing or conduit (EMT) fixtures as a ground source. Grounding shall meet the NEC and EIA/TIA requirements and practices except where other authorities or codes impose more stringent requirements or practices. (Refer to NEC Chapter 2 article 250 and Chapter 8 Communications Systems, TIA/EIA Standard J-STD-607-A and Motorola R56 Standards and Guideline for Communication site).

- In addition to protecting personnel and equipment from hazardous voltages, the grounding system may reduce the effect of electromagnetic interference (EMI) throughout the structured cable plant. Improper grounding can result in induced currents that disrupt Communications circuits.

- Ensure that the installation conforms with applicable regulations and practices
- Ensure that each Communications/Data room/closet has an appropriate ground buss bar
- Ensure that grounding is available for cross-connect frames, patch panel racks, Telephone and Data equipment, as well as testing and maintenance equipment

2. Space

- A distance of three feet is the preferred clearance from the front, back, and side of a relay rack.
- If there are space constraints, it is acceptable to provide a minimum of two feet of clearance on one rack side for access and a minimum of two feet of front and back clearance for cross-connect fields, patch panels, etc. If possible, locate sleeves, cores, slots, and/or conduits together in one area to maximize usable wall space.

These standards are adopted by the Department of Technology and Information (DTI), through the Technology and Architecture Standards Committee (TASC), and are applicable to all Information Technology use throughout the State of Delaware. Any questions or comments should be directed to dti_tasc@state.de.us.

3. Rooms/Closets Sizing
- Not used

4. Structural Walls
- Extend from the floor to the deck above (fire wall)
- Be securely fastened to the floor and the deck above
- Conform to national and local construction guidelines

5. Wall Linings
- Each Communications/Data room/closet will contain a minimum of one furred-out or flush sheet of plywood (4' X 8') mounted on the wall. Refer to drawings for actual quantities.
- Securely fasten the plywood to wall framing members to ensure that it can support any attached equipment.
- The plywood is to be 3/4", A/C grade, and fire-retardant.
- All plywood backboards are to be mounted smooth side out and painted white at time of installation, prior to installation of equipment onto the plywood.

6. Floor Finish
- Keep dust to a minimum in Communications/Data rooms/closets.

C. MDF Requirements

An MDF Room is a specialized communications closet that may house major communications systems, such as a PBX (private branch exchange), communications processor, and routing equipment. The MDF Room is generally considered to be distinct from an IDF Room because of the complexity of the equipment it contains.

A typical Main Distribution Frame (MDF) Room is composed of a wall-mounted plywood backboard or backboards and relay racks designed for mounting termination equipment and electronics (see **Error! Reference source not found.**). Most MDFs within the building cabling system also serve as an IDF. This is accomplished by providing separate relay racks for each and delineating the wall-mounted frame's 110 blocks for Station cabling (see **Figure 3 and Figure 4**).

FIGURE 3 – Sample Layout

These standards are adopted by the Department of Technology and Information (DTI), through the Technology and Architecture Standards Committee (TASC), and are applicable to all Information Technology use throughout the State of Delaware. Any questions or comments should be directed to dti_tasc@state.de.us.

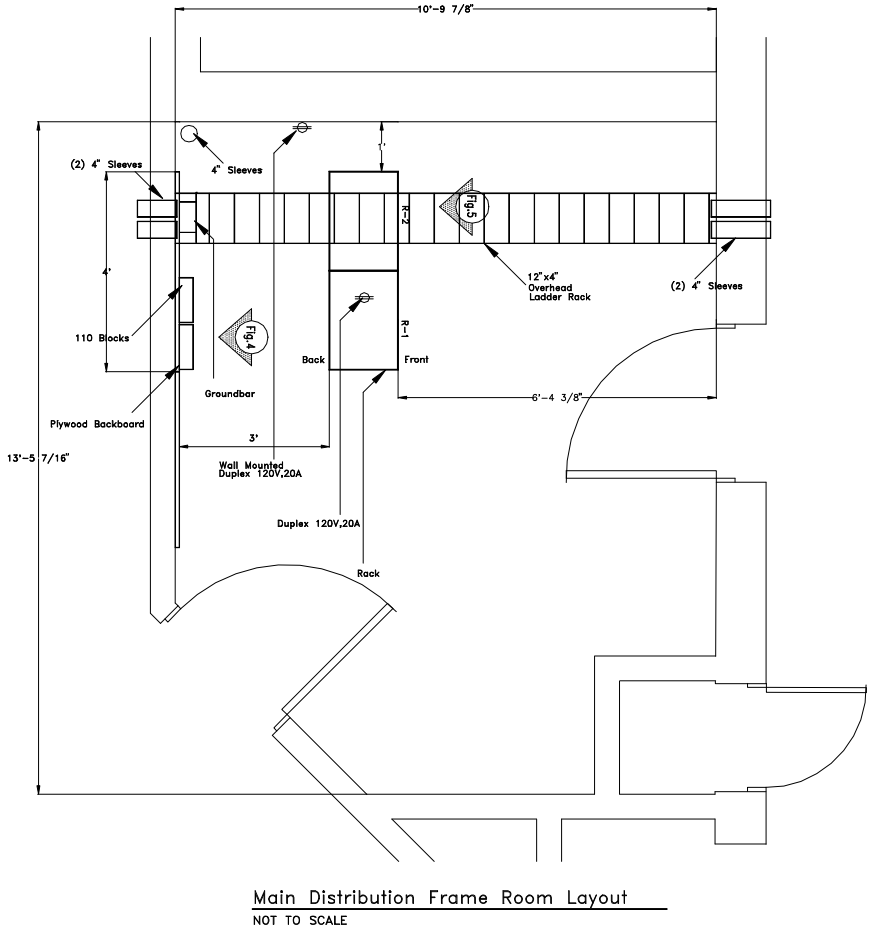

FIGURE 4 – Sample Elevation

These standards are adopted by the Department of Technology and Information (DTI), through the Technology and Architecture Standards Committee (TASC), and are applicable to all Information Technology use throughout the State of Delaware. Any questions or comments should be directed to dti_tasc@state.de.us.

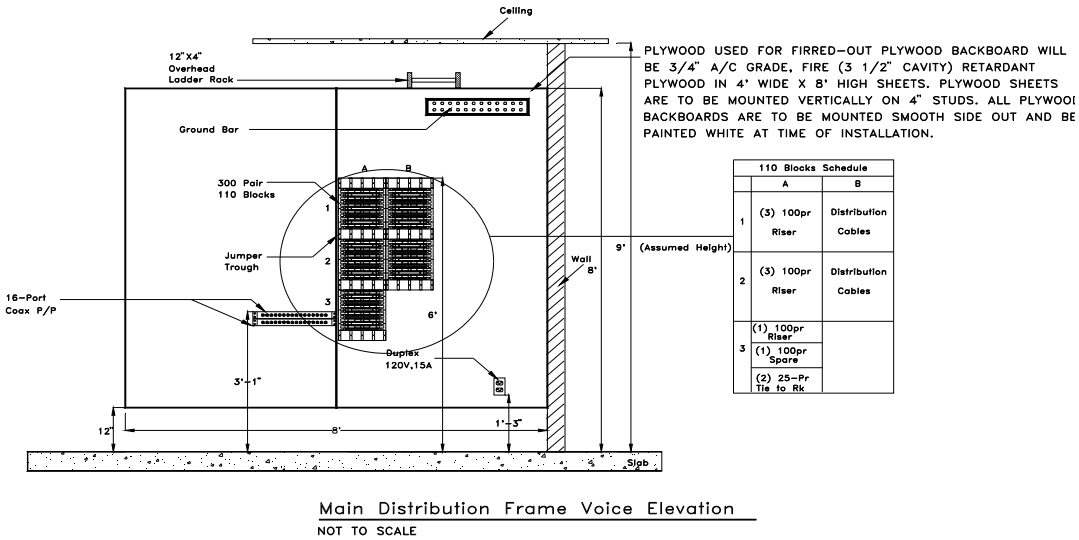

FIGURE 5 – Sample Elevation

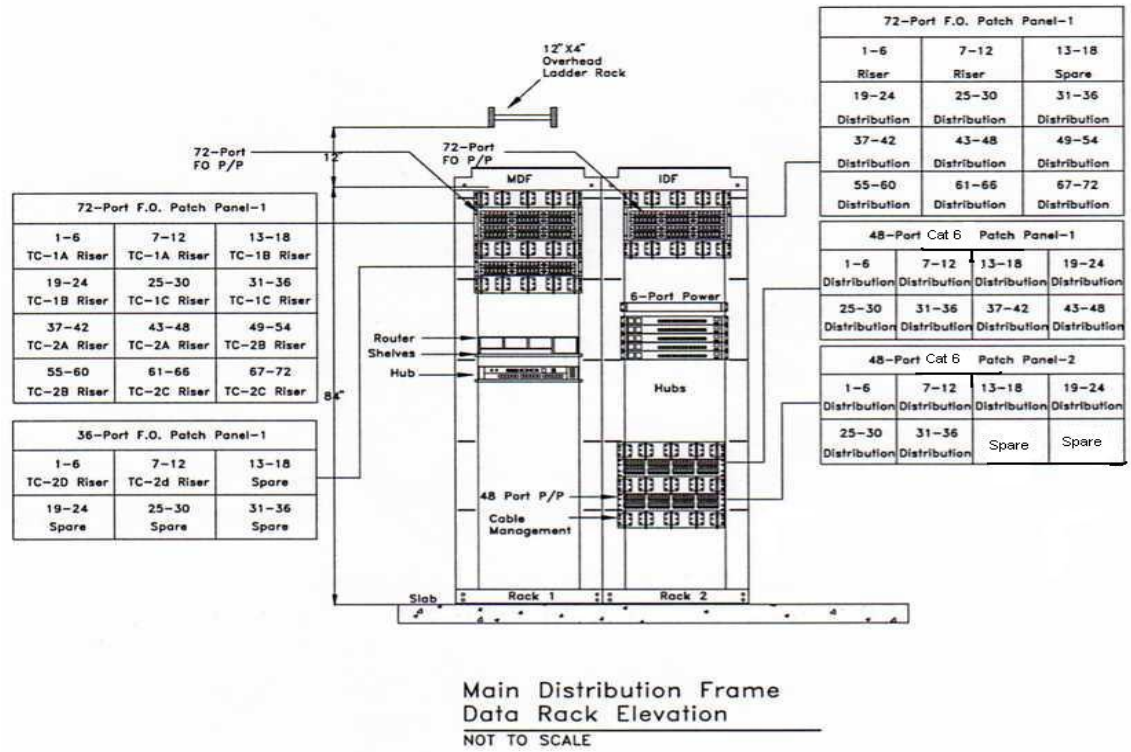

1. Local Exchange Carrier (LEC)

- Placement of Communications equipment may be influenced by vendors and service providers. For instance, the LEC (local phone company) may decide to terminate the Central Office (CO) service directly into the equipment space provided or request termination space other than that offered by the customer. If they request termination at a point other than that requested by the customer, the LEC should provide reasonable explanation.

These standards are adopted by the Department of Technology and Information (DTI), through the Technology and Architecture Standards Committee (TASC), and are applicable to all Information Technology use throughout the State of Delaware. Any questions or comments should be directed to dti_tasc@state.de.us.

- The LEC, CATV, and most service providers will require a conduit entrance in to the building to provide their service. The minimum requirements are two (2) four- inch conduits for the LEC and one (1) four-inch conduit for each other service provider, unless they specify otherwise in writing.
- It is critical that the high speed Data line (T1), TLS, and CSU/DSU be located in the MDF room. This will ensure security and simplify troubleshooting.
- The LEC may also need space for distribution systems terminations (either horizontal or vertical) and patch cable terminations.

2. Relay Racks

- The MDF will contain a minimum of one 19”W X 7’H Relay Rack onto which the fiber optic/copper patch panels and Data electronics are mounted.
- The relay racks shall have a minimum of 42 rack units of mounting space on standard 19” wide rails.
- All racks are to be grounded and bolted to each other as well as to the slab or wall.
- The rack shall have vertical and horizontal cable management to accommodate routing of patch cords as shown on the drawings.
- The rear of the rack is to face the plywood backboard and a distance of 48” is to be maintained from the foot of the relay rack.
- The side of the rack should have a minimum 6” clearance to an adjacent wall.
- The relay rack specifications and associated components shall meet the requirements of the equipment that will be installed in it.
- It shall be at a minimum 84” tall with 6” rails, with 19” equipment mounting space and vertical and horizontal wire management.

3. Data Equipment Cabinets

- Data equipment cabinets should conform to the State Data Center Standard as follows:

Cabinet size	24"Wx48"Dx72"H
Rack units	42 rack units for equipment mounting
Mounting rails	two pair 19" adjustable depth universal mounting
Mesh steel doors	single front and split rear with locking handles
Vertical cable management	trough, rings or Velcro tie downs or combination of, mountable left or right side
PDU mounting	space to mount two vertical PDU closest to equipment mountable left or right side
Side panels	removable, solid, both sides
Top	solid with cabling access opening capabilities
Bottom if required	solid with cabling access opening capabilities

- Cabinet shall have grounding, bounding and anti-tip capabilities that can be added when required.

- Approved cabinet Manufacturer: Cooper B-Line part #V422448ACXXSSSB or approved equal

4. Cable Trays

- Between the relay rack and the wall-mounted frame, a 12” cable tray (center-rail systems are not permitted), with a 4" load depth and 6" rung spacing is to be installed suspended from a ceiling support structure, mounted to the relay rack and the wall.
- Do not attach any cable tray to a suspended ceiling grid.
- An open wire basket cable tray system is acceptable for cable support.
- Approved manufacturer: Cooper B-Line part # FT4X12X10

D. IDF Room Requirements

Each IDF Rooms within a building supports all connections in single, contiguous area (zones). Cross-zone wiring is not to be installed from user workstations. Connections between zones are made through backbone wiring systems, which link the IDF Rooms to the MDF. A typical Intermediate

These standards are adopted by the Department of Technology and Information (DTI), through the Technology and Architecture Standards Committee (TASC), and are applicable to all Information Technology use throughout the State of Delaware. Any questions or comments should be directed to dti_tasc@state.de.us.

Distribution Frame (IDF) Room is composed of a wall-mounted plywood backboard and relay racks designed for mounting termination equipment and electronics.

FIGURE 6 – Sample Layout

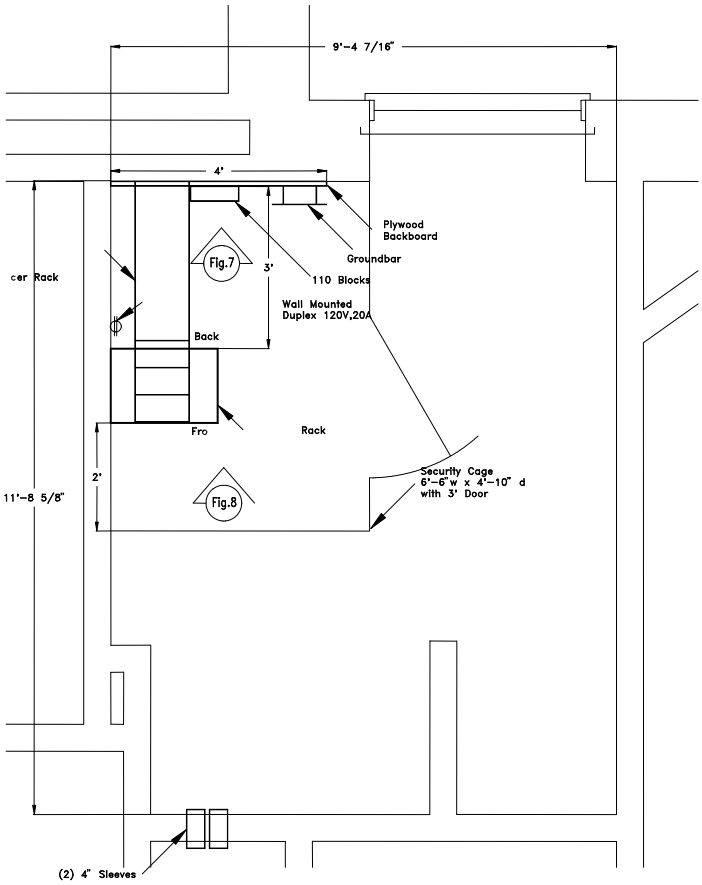

Sample IDF –TELECOMMUNICATIONS CLOSET LAYOUT
NOT TO SCALE

These standards are adopted by the Department of Technology and Information (DTI), through the Technology and Architecture Standards Committee (TASC), and are applicable to all Information Technology use throughout the State of Delaware. Any questions or comments should be directed to dti_tasc@state.de.us.

FIGURE 7 – Sample Elevation

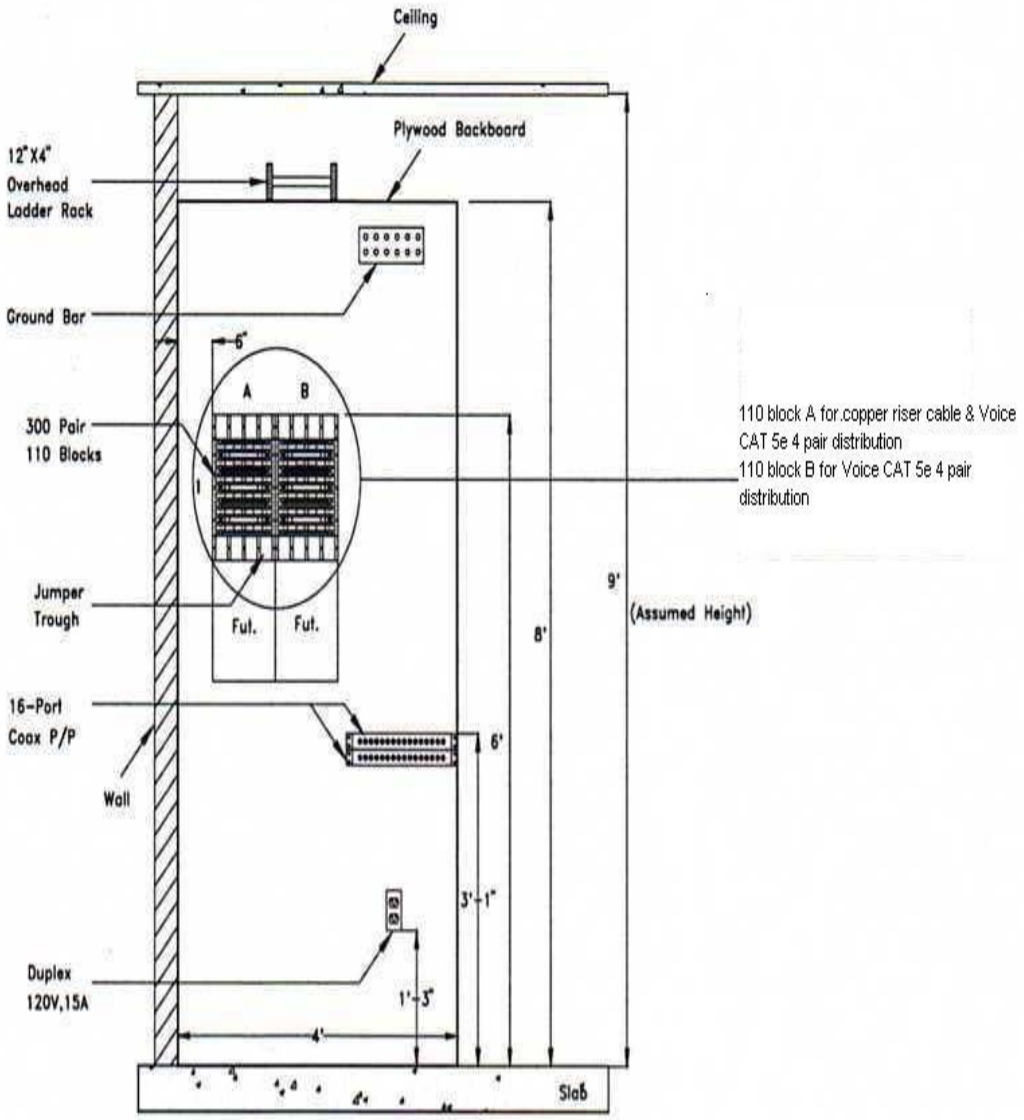

Sample IDF –Telecommunications Closet Elevation
NOT TO SCALE

These standards are adopted by the Department of Technology and Information (DTI), through the Technology and Architecture Standards Committee (TASC), and are applicable to all Information Technology use throughout the State of Delaware. Any questions or comments should be directed to dti_tasc@state.de.us.

FIGURE 8 – Sample Elevation

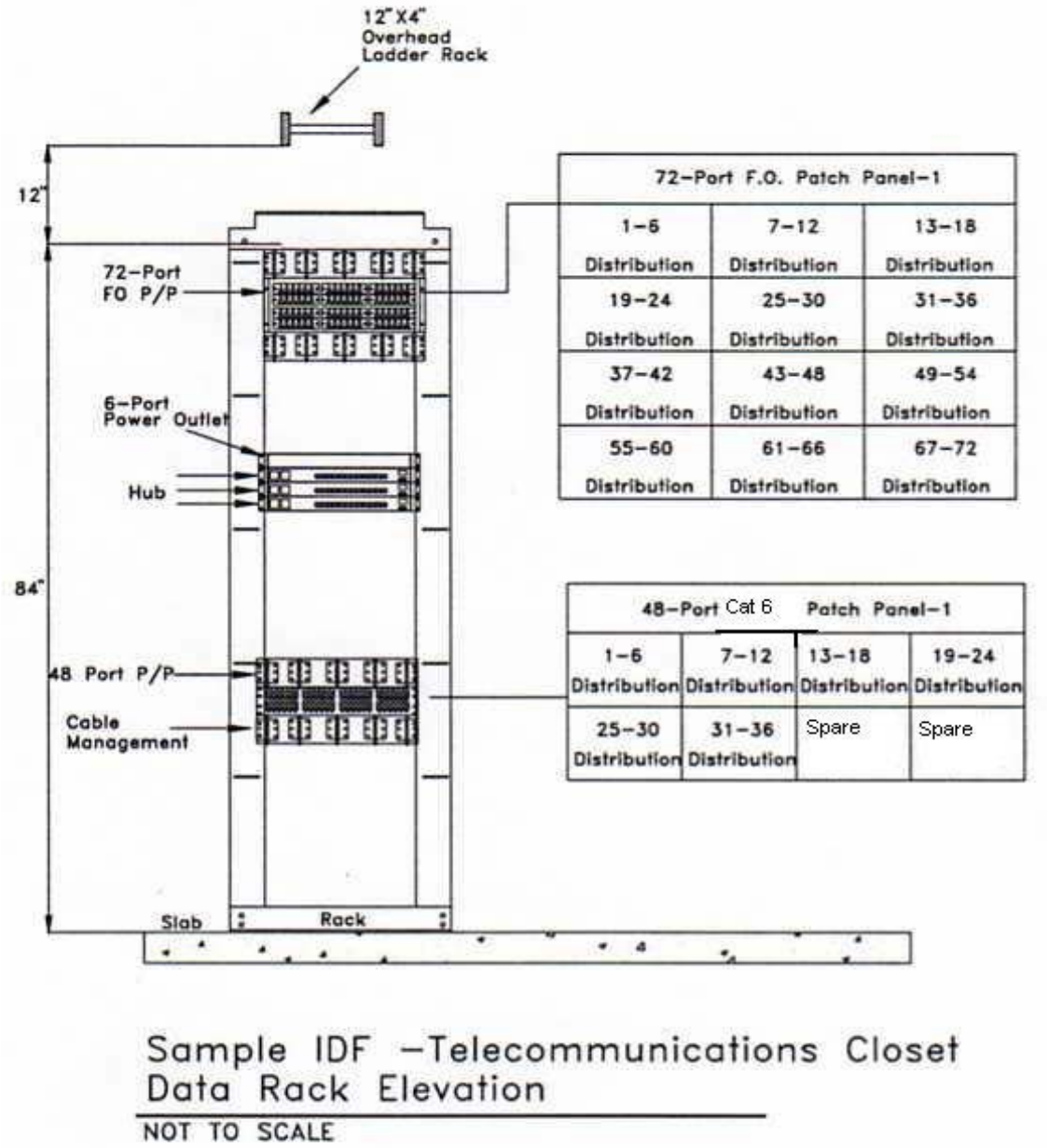

1. **Plywood Backboard**
   - Each IDF Room will contain a minimum of one 4' X 8' sheet of plywood flush- mounted on the wall.
   - Securely fasten the plywood to wall-framing members to ensure that it can support attached equipment.
   - The plywood is to be 3/4", A/C grade and fire retardant.
   - All plywood backboards are to be mounted smooth side out and painted with white fire retardant paint at time of installation and prior to installation of equipment onto the plywood.

These standards are adopted by the Department of Technology and Information (DTI), through the Technology and Architecture Standards Committee (TASC), and are applicable to all Information Technology use throughout the State of Delaware. Any questions or comments should be directed to dti_tasc@state.de.us.

2. Relay Racks

- Each MDF will contain a minimum of one 19"W X 7'H Relay Rack onto which the fiber optic/copper patch panels and Data electronics are mounted.
- The relay racks shall have a minimum of 42 rack units of mounting space on standard 19" wide rails.
- manufacturer's requirements, and space allocated.
- All racks are to be grounded and bolted to each other as well as to the slab or wall.
- The rack shall have vertical and horizontal cable management to accommodate routing of patch cords ash shown on the drawings
- The rear of the rack is to face the plywood backboard and a distance of 48" is to be maintained from the foot of the relay rack.
- The side of the rack should have a 6" clearance to an adjacent wall.
- The relay rack specifications and associated components shall meet the requirements of the equipment that will be installed in it.
- It shall be at a minimum 84" tall with 6" rails, with 19" equipment mounting space and vertical and horizontal wire management.

3. Cable Trays

- Between the relay rack and the wall-mounted frame, a 12" cable tray (no center rail systems), with a 4" load depth and 6" rung spacing is to be installed suspended from a ceiling support structure, mounted to the relay rack and the wall.
- Do not attach cable trays to the suspended ceiling grid.
- An open wire basket cable tray system is acceptable for cable support.

PART 10 MDF & IDF PRODUCT SPECIFICATIONS

- **Category 6 Patch Panels**

The default cabling infrastructure shall be Category 6 unless specified otherwise.

1. Category 6 Patch Panel Requirements

- Category 6 patch panels shall be standard 8-position, RJ-45 style, un-keyed, in 48-port configurations.
- Panel frames shall be 14-gage steel with rolled edges top and bottom for proper stiffness.
- Panel design shall incorporate plastic push-fasteners to permit hands-free positioning onto standard EIA-310-D 19" mounting rails.
- Panels shall accommodate a minimum of 24 ports for each rack mount unit (1 RMU = 1.75 in.).
- Panels shall be designed for 4-pair, 100 ohm balanced unshielded twisted pair (UTP) cable.
- Panels shall terminate 26-22 AWG solid conductors, with maximum insulation diameter of 0.050 in.
- Panels shall have attached wiring instruction labels to permit either T568A or T568B wiring configurations.
- Panels shall have individual port identification numbers on the front and rear of the panel.
- Panel adapter modules shall be 110-style termination with tin lead solder plated IDC contacts.
- Printed circuit boards shall be fully enclosed front and rear for physical protection.
- Panel contacts shall withstand a minimum of 2000 mating cycles with an FCC 8-position RJ-45 plug, without degradation of electrical or mechanical performance.
- Panel contacts shall be constructed of Beryllium copper for maximum spring force and durability.
- Contact plating shall be a minimum of 50 micro-inches of hard gold in the contact area over 50 micro-inch of nickel.
- Panel termination method shall follow the industry standard 110 IDC punch-down, using a standard 110 impact termination tool.
- Panels shall be compatible with a 4-pair multi-punch impact termination tool designed specifically for the purpose. Bending or other damage to the panel using a multi-pair punch tool shall not occur.
- IDC contact termination towers shall have tapered pair-splitting features to aid wire insertion and minimize pair un-twist.
- IDC contacts shall be Phosphor Bronze with 100 micro-inch tin lead 60/40 plating over nickel.
- Panels shall not require special cords, specialty tools or special installation requirements.
- Panel ports shall accept optional hinged dust covers and port identification icon buttons.

These standards are adopted by the Department of Technology and Information (DTI), through the Technology and Architecture Standards Committee (TASC), and are applicable to all Information Technology use throughout the State of Delaware. Any questions or comments should be directed to dti_tasc@state.de.us.

- Space above the adapter ports shall be available for additional labeling per ANSI/TIA/EIA-606-A.
- Panels shall accept a clip-on rear cable management support bar to provide cable strain relief.

2. Category 6 Patch Panel Performance Requirements

- All transmission performance parameters shall be independently verified by a UL or ETL third party testing organization.
- Category 6 panels shall meet or exceed Category 6 transmission requirements for connecting hardware, as specified in ANSI/TIA/EIA-568-B.2-1, Transmission Performance Specifications for 4-Pair 100 ohm Category 6 Cabling.
- The manufacturer shall provide Category 6 component compliance certificates from third party testing organizations upon request.
- Panels shall be UL LISTED 1863 and CSA certified.
- Panels shall exceed IEEE 802.3 DTE Power specification to 4 times the rated current limits with no degradation of performance or materials.
- Panel contacts shall withstand a minimum of 2000 mating cycles with an FCC 8-position RJ-45 plug, without degradation of electrical or mechanical performance.
- Panels shall be third party verified, error free Gigabit Ethernet performance to IEEE 802.3 standard.
- Category 6 panels shall meet the current draft 10 Gb/s performance requirements of IEEE 802.3an and TSB-155, for a maximum 55-meter channel length. Conditions of requirement No. 10 above apply.

3. Acceptable Manufacturers:

- Hubbell Premise Wiring.
  The Hubbell products listed in the table below comply with all requirements specified in this document

HUBBELL CATALOG NUMBER	Description
P6E48U	NEXTSPEED® Category 6 Patch Panel, 48-Ports
PCBLMGT	Rear Cable Management Bar

- Or approved equal of: Ortronics, Panduit, Systimax

4. Category 6 Patch Panel Installation Requirements

- Horizontal and backbone cabling of the proper category shall be fully deployed into the TR, TE, or ER according to applicable codes and standards.
- Cable slack, service loops, bend radii, and pathway fill ratio shall comply with applicable codes and standards.
- Racks, cabinets, enclosures, and metallic cable pathways shall be bonded to an approved ground according to ANSI-J-STD-607-A.
- Cable ends for termination shall be clean and free from crush marks, cuts, or kinks left from pulling operations.
- Properly mount patch panels into the designated rack, cabinet, or bracket locations with the #12-24 screws provided.
- Terminate cables into the patch panel according to manufacturer's instructions.
- To maximize transmission performance, maintain wiring pair twists as close as possible to the point of termination.
- The length of wiring pair un-twist in each termination shall be less than 0.5 inches (13 mm).
- Horizontal or backbone cables extending from the panel terminations shall maintain a minimum bend radius of at least 4 times the cable diameter.
- Cable terminations shall have no tensile or bending strain on panel IDC contacts in each installed location.
- Panels shall be properly labeled on front and back with the cable number and port connections for each port.

• Fiber Enclosures, Adapter Plates, Connectors

1. Fiber Adapter Enclosure Requirements

- Enclosure design shall be a modular, rack-mounted, powder coated formed cold rolled steel enclosure with a removable front cover, rear panel, top panel, and slide-out inner tray.

These standards are adopted by the Department of Technology and Information (DTI), through the Technology and Architecture Standards Committee (TASC), and are applicable to all Information Technology use throughout the State of Delaware. Any questions or comments should be directed to dti_tasc@state.de.us.

- Each basic unit delivered shall consist of: (1) enclosure assembly, (2) mounting brackets, (6) cable ties, (5) snap-in cable clips (4) #12-24 mounting screws, (1) adhesive grid label, (4) adhesive cable clips, (2) Velcro cable ties, (3) label holders, and (1) splice tray stud, wing nut, and spacer.
- Material shall be as follows:
  a. Enclosure, panels and tray: 16 gage cold rolled steel (CRS)
  b. Mounting brackets: 14 gage CRS
  c. Front cover: Acrylic (Plexiglas) with smoke tint
- Basic dimensions of the enclosures shall be approximately 17” wide by 12” deep.
- Enclosures shall be available in heights of 3.5” (2 RMU), 5.25” (3 RMU), and 7” (4 RMU) versions.
- Finish shall be black durable powder coat on all surfaces.
- Front door shall be smoke-tinted Lexan plastic, hinged at the bottom, with a cap-plugged hole to accept an optional lock. Front door shall also be removable in the fully open position by sliding left off the mounting pins.
- Front door shall be secured in the closed position with lever-action quick-release latches.
- Top cover shall be removable in the forward direction, without fasteners, to provide access to the connector field. Top panel shall also have knockouts for backbone cable entry.
- Rear panel shall be removable without fasteners.
- Enclosure shall be equipped with panel-mounting brackets assembled for 19” rack mounting, compliant to ANSI/EIA-310-D.
- Panel mounting brackets shall be configurable to either 19” or 23” racks.
- Enclosure chassis shall have two mounting bracket locations for either flush mount or center mount on the rack.
- Rear of enclosure shall have two knockouts, top and bottom, for backbone cable entry and internal routing.
- Front of enclosure chassis shall have side cutouts for patch cord entry into, and exit from the enclosure.
- Inner tray shall slide out in the forward direction by releasing the lever-action quick-release latches. Tabs in the chassis shall engage with slots in the inner tray in the outward position to prevent tray from falling out.
- Inner tray shall have rear-located knockouts to match rear chassis knockouts.
- Inner tray panel mounting posts shall accept modular adapter panels, in high- or low-density versions. Adapter panels shall be available in ST multimode OM4/singlemode.
- Splice tray mounting boss shall also accept a stud for mounting blown fiber adapter brackets.
- Inner tray shall have clips for cable ties, and holes to accept snap-in cable clips, front and rear, for complete cable management of patch cords and distribution cable strands.
- Inner tray shall have rear cable tie-down features to accept various diameter backbone cables entering the enclosure.

2. Fiber Adapter Panels Requirements

- Fiber adapter panels shall be a modular, quick-fastening steel plate, powder coated to match the enclosure finish.
- Fiber adapter panels shall have pre-installed LC fiber adapters, available in low- or high-density multi-mode or single-mode applications.
- Each individually bagged unit delivered shall consist of: (1) fully assembled adapter panel, with push-pull fasteners pre-installed.
- Adapter panels shall be constructed of 16 gage cold rolled steel.
- Finish shall be black durable powder coat on all surfaces.
- Basic dimensions of the FSP panels shall be 5.10” length by 1.10” wide.
- Panels shall have two pre-installed, push-pull type quick-release fasteners for quick snap-in installation. Push-pull fasteners shall have an industry standard center distance of 4.65”.
- Panels shall be suitable for mounting either vertically or horizontally.
- Panels shall be available in with LC adapters with precision ceramic alignment sleeves.
- All fiber adapters installed in FSP panels shall have dust caps installed.
- Panels shall be available in low-density and high-density adapter patterns.

3. Fiber Connector Requirements

- Connector basic design shall be a factory pre-polished LC optical fiber connector with a zirconium ceramic ferrule. Integral with the connector body is a wedge-activated fiber clamping mechanism to secure the inserted fiber into a mechanical splice with the factory installed cleaved fiber stub. Index-matching gel is

These standards are adopted by the Department of Technology and Information (DTI), through the Technology and Architecture Standards Committee (TASC), and are applicable to all Information Technology use throughout the State of Delaware. Any questions or comments should be directed to dti_tasc@state.de.us.

supplied factory-injected into the cleaved fiber stub splice to optimize transmission performance. Connector attachment is achieved without tools, by inserting a field-cleaved optical fiber and then extracting the disposable clamp wedges from the connector body.

- Each basic connector unit delivered shall consist of: (1) connector body with disposable clamp wedge, (1) strain relief boot, and (1) plastic dust cap.
- LC multimode factory pre-polished connectors shall be 50 micron laser optimized pre-installed fiber.
- Connector termination method shall utilize an industry standard multi-layer strip tool and bare fiber cleave tool as the only field tools required.
- LC connectors shall have features to enable field verification using a Visual Fault Locator (VFL) during termination.
- Connector materials shall be designed with thermal stability to comply with environmental requirements of ANSI/TIA/EIA-568-B.3 and Telcordia GR-1081-CORE.
- Multimode OM4 and singlemode pre-polished fiber connector materials shall be as follows:
  a. Ferrule: zirconium ceramic
  b. LC inner body: thermally stable injection molded thermoplastic
  c. Dust Cap: nylon or PVC
  d. Strain relief boot: UL94-V0 molded PVC
- Pre-polished LC connectors shall require no field polishing.
- Pre-polished MM LC connector body shall be industry standard aqua for 50 micron multimode OM4, laser optimized.
- colors for specific applications, as designated below:
- Pre-polished MM LC connectors shall require no adhesives for termination.
- LC connector internal fiber clamping mechanism shall firmly secure both the inserted glass fiber and the 900 micron buffer layer of the inserted fiber for maximum strain relief.
- All standard mating and interface dimensions for LC connectors shall comply with ANSI/TIA/EIA-604-10 (FOCIS 10).
- Ferrule outside diameter for LC multimode connectors shall be 1.2467mm to 1.2497mm.
- Ferrule outside diameter for LC singlemode connectors shall be 1.2483mm to 1.2497mm.
- LC ferrule tip shall have a PC spherical radius of approximately 7.0 mm radius for multimode and singlemode versions.
- Delivered connectors shall be individually bagged with the dust cap installed to protect from contamination.
- Delivered connectors shall have the disposable clamp activation wedge element pre-installed onto the connector body.
- Connector design and termination technique shall be independent of cable type or manufacturer, and shall be compatible for either 900 micron buffer or 250 micron buffer distribution cables.
- LC connector strain relief boot shall be a Telcordia style slotted design for maximum flexural strain relief.
- Strain relief boot shall be black for multimode, and yellow for singlemode.
- LC connectors shall be available individually bagged in packs of 12.
- Pre-polished LC fiber connectors, when properly installed onto qualified cable, shall meet the 10 Gb/s Ethernet performance requirements of IEEE802.3.
- Pre-polished LC fiber connectors, properly installed onto qualified cable, shall exceed the mechanical and environmental performance requirements of ANSI/TIA/EIA-568-C.3, Annex 'A'.
- Pre-polished LC fiber connectors, properly installed onto qualified cable, shall exceed the mechanical and environmental performance requirements of Telcordia GR-1081-CORE.
- Qualification test data shall be available from the manufacturer upon request.

4. Acceptable Manufacturers:

- Hubbell Premise Wiring.
  The Hubbell products listed in the table below comply with all requirements specified in this document

HUBBELL CATALOG NUMBER	Description
FCR350SP36R	Fiber Enclosure - 2U Rack Mount Fiber Enclosure, Accepts 6 Adapter Panels
FCR350SP54R	Fiber Enclosure - 2U Rack Mount Fiber Enclosure, Accepts 9 Adapter Panels
FCR525SPR	Fiber Enclosure - 3U Rack Mount Fiber Enclosure, Accepts 12 Adapter Panels
FCR700SP	Fiber Enclosure - 4U Rack Mount Fiber Enclosure, Accepts 15 Adapter Panels

These standards are adopted by the Department of Technology and Information (DTI), through the Technology and Architecture Standards Committee (TASC), and are applicable to all Information Technology use throughout the State of Delaware. Any questions or comments should be directed to dti_tasc@state.de.us.

FSPLCDM6AQ	Fiber Adapter Panel - 6 LC Duplex, Aqua for MM – Phosphor Bronze Sleeves
FSPLCQM6AQ	Fiber Adapter Panel - 6 LC Quad, Aqua for Multimode – Phosphor Bronze Sleeves
FSPLCDS6	Fiber Adapter Panel - 6 LC Duplex, Blue for SM – Zirconia Ceramic Sleeves
FSPLCQS3	Fiber Adapter Panel - 6 LC Quad Blue for SM – Zirconia Ceramic Sleeves
FCLC900K50GM12	Fiber Connector - LC, MM, 50/125um, OM3 – Aqua, Box of 12
FCLC900K50GM12	Fiber Connector - LC, SM, 9/125 UPC – Blue Box of 12

- Or approved equal of: Ortronics, Panduit, Systimax

5. Fiber Installation Requirements

- For FCR-series enclosures, remove top and rear covers, and front door.
- Punch out the desired knockouts for cable entry.
- Using proper method, pull cables into cabinet through the desired knockout entry location.
- Strip the outer sheath and sub sheaths of the fiber cable to provide at least (2) meters service loop of the individual buffered fiber strands.
- Anchor the outer cable sheath into the rear channel of the inner tray using the cable ties provided. Note: in FCR-series enclosures, leave enough slack in the main cable to allow free motion of the inner tray fully outward. Remove cable entry knockouts as required.
- Installed copper and fiber cabling shall be properly strain relieved. Cable service coil, bend radius, and pathway fill ratio shall comply with applicable codes and standards.
- Use the plastic adhesive-backed clips provided to form the fiber strands into a large service coil on the surface of the inner tray. For FCR-series enclosures, be sure the inner tray has full mobility in and out, with no cable kinks or snags.
- Close inner tray and front cover, and lock the quick-release fasteners.
- Install SC fiber adapter panels by firmly using push fasteners to lock in place.
- Leave dust caps installed in the fiber adapter plates until connector termination is performed.
- Follow manufacturer's termination instructions for pre-polished connectors as specified
- Uncoil the 900-micron buffered strands of cable from the service loop and set-up for termination.
- Un-package the connector, and leave dust cap installed. Firmly press downward on the connector wedge tab to fully seat clamp wedges.
- Slide the strain relief boot onto the fiber strand before stripping.
- Using a fiber strip tool, strip buffered fiber completely to approx. 1.0" of exposed glass fiber.
- Y CAUTION: Do not nick or scrape the glass fiber with the strip tool.
- Wipe the glass fiber firmly with an alcohol wipe. Always use 99.9% pure reagent grade alcohol for fiber cleaning.
- Mark the 900 micron buffer layer from the strip-off point per instructions.
- Insert the fiber into the cleave tool and cleave the fiber to the specified length from the end of the 900 micron buffer layer. Always keep the cleave tool clean.
- Y CAUTION: Always dispose of glass fiber waste in an approved container.
- Gently insert the cleaved fiber into the connector body. Rotate connector slightly during insertion to fully seat the fiber into the internal splice.
- Hold the seated fiber in place using slight force to form a bow in the fiber.
- Y CAUTION: Do not allow the installed fiber to slip backward.
- While holding the fiber seated, squeeze the wedge holder device to activate the clamp, and then slip the wedge holder off the connector body. Dispose the wedge holder.

- Remove the connector dust cap and inspect the ferrule tip. A 400X microscope is recommended. View of the polished fiber should be a smooth round circle with no scratches, pits, cracks or chips. Use a lint-free wipe to clean off any contamination.
- Y CAUTION: Do not view ends of live fibers, with or without a microscope.
- Plug the connector into the proper adapter panel and proceed with the next connector. Leave dust cap installed if the connector is not mated.

• Racks, Horizontal & Vertical Managers

1. Equipment Racks Requirements

These standards are adopted by the Department of Technology and Information (DTI), through the Technology and Architecture Standards Committee (TASC), and are applicable to all Information Technology use throughout the State of Delaware. Any questions or comments should be directed to dti_tasc@state.de.us.

- Racks shall be a structural aluminum construction, having two 6-inch deep rails.
- Racks shall feature universal side mounting hole pattern for vertical cable managers.
- Racks shall feature a weight load capacity of 1,000 lbs when properly secured to the floor.
- Each basic rack delivered shall consist of: (2) vertical rails, (2) base angles, (1) assembly hardware kit, (2) top angles, and (20) #12-24 dog point machine screws for panel mounting.
- Racks shall be available in either for 19-inch standard rack configurations.
- Tapped holes in the front and rear vertical rails for mounting of panels shall be #12-24 thread size. Powder coat shall not interfere with thread fit.
- Standard rack heights of 8 ft (96 in)
- Racks with heights of 8 ft shall have a capacity of 51 rack mount units
- Rack base angles shall be pre-drilled for floor mounting, and for assembly to vertical rails.

2. Horizontal Managers Requirements

- Horizontal Managers shall be 19”W, 3.5”H
- Horizontal managers shall be 16ga. Cold rolled steel construction with (6) pass thru holes, and (7) Front mounted 3.5” steel rod D-Rings.
- Horizontal managers shall have hinged Aluminum front cover to conceal patch cords.

3. Vertical Managers Requirements

- Vertical cable managers shall be 14”D, 10”W
- Vertical cable managers shall feature a steel rod construction for increased air flow.
- Vertical cable managers shall feature a solid aluminum door that is designed to open left or right and swing out of way for cable management.
- Vertical cable managers shall feature power strip mounting brackets on rear of manager.
- Vertical cable manager shall accept and include (16) 3" black cable management spools.

4. Acceptable Manufacturers:

- Hubbell Premise Wiring.
  The Hubbell products listed in the table below comply with all requirements specified in this document
- Cooper B-Line.
  The Cooper B-Line products listed in the table below comply with all requirements specified in this document

HUBBELL CATALOG NUMBER	Description
HPW84RR19D	84”H, 6”D Equipment Rack
HC219CE3N	2U Horizontal Manager w/ 3.5” Front rings and cover
XS1010	Vertical Cable Manager, 14”D, 10”W, with door & cable spools

B-Line CATALOG NUMBER	Description
SB55608419U6	84”H, 6”D Equipment Rack
SB87019S2FB	2U Horizontal Manager w/ 3.5” Front rings and cover
SB860810S084	Vertical Cable Manager, 14”D, 10”W, with door & cable spools

- Or approved equal of: Ortronics, Systimax, or Cooper B-Line as denoted on drawings

- **Category 5e-110 Termination Blocks**

1. 110 Termination Block Requirements

- Category 5e-110 wiring blocks shall be available in 50-pair, 100-pair and 300-pair capacities, with or without detachable standoff legs.
- Wiring blocks shall be available as kits that include wiring blocks, label strips, and the appropriate quantity of connecting blocks for termination to full capacity.

These standards are adopted by the Department of Technology and Information (DTI), through the Technology and Architecture Standards Committee (TASC), and are applicable to all Information Technology use throughout the State of Delaware. Any questions or comments should be directed to dti_tasc@state.de.us.

- Connecting blocks shall accommodate a 5-pair punch-down tool designed specifically for the purpose of Category 5e termination.
- Wiring blocks and connecting blocks shall be constructed of UL94-V0 rated high-impact flame-retardant polycarbonate blend thermoplastic.
- Wiring blocks shall accept 26-22 AWG solid or stranded conductors
- Wiring blocks shall accept conductor insulation diameters of .050 in to .070 in maximum.
- Wiring blocks and connecting blocks shall have a temperature rating of 14 °F to 140°F with up to 95% non-condensing humidity.
- Wiring blocks shall have through-openings to permit rear cable entry and direct routing to each point of termination.
- Connecting blocks shall connect to the wiring block with a locking force of 35 Lb minimum.
- Connecting blocks shall withstand a minimum of 200 re-terminations without degradation to electrical or mechanical performance.
- IDC contact termination towers on the connecting blocks shall have tapered pair-splitting features to aid wire insertion and minimize pair un-twist. IDC towers shall also have high-definition color-coding.

2. 110 Termination Block Performance Requirements

- A UL or ETL third party testing organization shall independently verify all Category 5e transmission performance parameters.
- Category 5e-110 termination blocks shall meet or exceed Category 5e transmission requirements for connecting hardware, as specified in ANSI/TIA/EIA-568-B.2.
- The manufacturer shall provide Category 5e component compliance certificates from third party testing organization upon request.
- 5e-110 termination blocks shall be UL LISTED 1863.
- 5e-110 termination blocks shall exceed IEEE 802.3 DTE Power specification to 4 times the rated current limits with no degradation of performance or materials.
- 5e-110 termination blocks shall be third party verified, error free Gigabit Ethernet performance to IEEE 802.3 standard.
- 5e-110 termination blocks shall meet or exceed the 4-connector channel performance requirements of Category 5e, per the ANSI/TIA/EIA-568-B.2.

3. Acceptable Manufacturers:

- Hubbell Premise Wiring.
  The Hubbell products listed in the table below comply with all requirements specified in this document

HUBBELL CATALOG NUMBER	Description
110BLK50FTK5	110 Field Termination Kit, 5e-110/50-pair with 5-Pair Conn. Blocks
110BLK100FTK5	110 Field Termination Kit, 5e-110/100-pair with 5-Pair Conn. Blocks
110BLK300FTK5	110 Field Termination Kit, 5e-110/300-pair with 5-Pair Conn. Blocks

- Or approved equal of: Ortronics, Panduit, Systimax

4. 110 Installation Requirements

- Follow manufacturer's instructions.
- Mount 5e-110 wiring blocks in the desired location.
- Route cables through the openings in the wiring block base.
- Terminate UTP cables to the 5e-110 block according to manufacturer's instructions, using the connecting blocks and proper termination tool.
- To maximize transmission performance, maintain wiring pair twists as close as possible to the point of termination.
- The length of wiring pair un-twist in each termination shall be less than 0.5 inches (13 mm).
- Cables extending from the block terminations shall maintain a minimum bend radius of at least 4 times the cable diameter.
- Cable terminations shall have no tensile or bending strain on IDC contacts after termination. Note: Use the appropriate cable management hardware to relieve cable strain and control bend radius.

These standards are adopted by the Department of Technology and Information (DTI), through the Technology and Architecture Standards Committee (TASC), and are applicable to all Information Technology use throughout the State of Delaware. Any questions or comments should be directed to dti_tasc@state.de.us.

PART 11 INFORMATION OUTLETS

Each school and District Office has a specific information outlets requirements, however, the standard specification is an information outlet providing (1) Data & (1) Voice Category 6 jack per location as a basic requirement wired to the 568B standard. See drawings for further specifications and configurations of the different types of information outlets.

A. Information Outlet Locations

1. The location of the information outlets is dependent on the environment in which the outlets will be installed. If the outlets are to be wall-mounted, the bottom of the outlet is to be located 15" above the finished floor unless otherwise shown or stated. If there is equipment or furniture that does not allow for this, such as a credenza or countertop, the outlet must be placed at a height appropriate to the situation.

   Note: The outlet box conduit stub up should be at least 1" OD minimum.

2. Locate the outlet where it is closest to the equipment and people it will serve. Keep in mind that the cord from the outlet to the device can be a trip hazard or may span across doors.

3. Wall-mounted outlets should not be located on heating units, equipment or ductwork. They are always to be located in either a gypsum, sheetrock, or masonry wall.

4.

B. Category 6 Jacks

The default cabling infrastructure shall be Category 6 for voice and data connectivity at the information outlet unless specified otherwise.

1. Category 6 Jack Requirements

- Jacks shall be standard 8-position, RJ-45 style, un-keyed, FCC compliant.
- Jacks shall be designed for 4-pair, 100 ohm balanced unshielded twisted pair (UTP) cable.
- Each jack shall be single unit construction, with snap – fit to industry standard keystone opening (.760" x .580").
- Jack housings shall fully encase and protect printed circuit boards and IDC fields.
- Modular jack contacts shall accept a minimum of 2000 mating cycles without degradation of electrical or mechanical performance.
- Jack contacts shall be constructed of Beryllium copper for maximum spring force and durability.
- Contact plating shall be a minimum of 50 micro-inches of hard gold in the contact area over 50 micro-inch of nickel.
- Jack termination method shall follow the industry standard 110 IDC punch-down
- Jacks shall be compatible with a 4-pair single punch impact tool designed specifically for the purpose.
- IDC contact termination towers shall have tapered pair-splitting features to aid wire insertion and minimize pair un-twist.
- Jacks shall terminate 26-22 AWG solid or stranded conductors.
- Jacks shall terminate insulated conductors with outside diameters up to .050".
- Jacks shall not require special cords, specialty tools or special installation requirements.
- Jacks shall include a translucent stuffer cap for wire retention and to permit visual inspection.
- Stuffer cap shall have retention snaps to assure conductor strain relief.
- Jacks shall accept FCC compliant 6 position plugs.
- Jacks shall accept optional hinged dust covers.
- Jacks shall be compatible with ANSI/TIA/EIA-606-A color code labeling.
- Jacks shall accept snap-on icons for specific identification.
- Jacks shall be available in various colors to meet specific customer applications.

These standards are adopted by the Department of Technology and Information (DTI), through the Technology and Architecture Standards Committee (TASC), and are applicable to all Information Technology use throughout the State of Delaware. Any questions or comments should be directed to dti_tasc@state.de.us.

- Jacks shall have attached wiring instruction labels to permit either T568A or T568B wiring configurations.

2. Category 6 Jack Performance Requirements

- All transmission performance parameters shall be independently verified by a UL or ETL third party testing organization.
- Category 6 jacks shall exceed Category 6 transmission requirements for connecting hardware, as specified in ANSI/TIA/EIA-568-B.2-1, Transmission Performance Specifications for 4-Pair 100 ohm Category 6 Cabling.
- Category 6 jacks shall exceed 10 Gb/s transmission requirements for connecting hardware, under the constraints of ANSI/TIA-TSB-155 (current draft).
- The manufacturer shall provide Category 6 component compliance certificates from third party testing organization upon request.
- Jacks shall be UL LISTED 1863 and CSA certified.
- Jacks shall exceed IEEE 802.3 DTE Power specification to 4 times the rated current limits with no degradation of performance or materials.
- Jacks shall be third party verified, error free Gigabit Ethernet performance to IEEE 802.3 standard.
- Jacks shall exceed 4 Gb/s data transmission capacity within the bandwidth of 1 – 250 MHz when configured in a 4-connector channel.
- Jacks shall exceed the 4-connector channel performance requirements of Category 6, per the ANSI/TIA/EIA-568-B.2-1 standard.
- Jacks shall exceed the 4-connector Category channel performance requirements for 10 Gb/s transmission over Category 6, according to TIA/TSB-155 (current draft).
- The 4-connector channel test configuration shall utilize Category 6 patch panels and Category 6 patch cords, from the same manufacturer, with qualified Category 6 cable.

3. Acceptable Manufacturers:

- Hubbell Premise Wiring.
  The Hubbell products listed in the table below comply with all requirements specified in this document

HUBBELL CATALOG NUMBER	Description
HXJ6xx	NEXTSPEED® Category 6 Jack

xx = Jack color. Replace xx with “W” for White, “BK” for Black, “B” for Blue, “GY” for Gray, “GN” for Green, “OW” for Office White, “OR” for Orange, “R” for Red, “Y” for Yellow. Refer to project drawing for color applications.

- Or approved equal of: Ortronics, Panduit, Systimax

4. Category 6 Jack Installation

- Horizontal cabling of the proper category shall be fully deployed from the TR or TE to each wall plate location according to applicable codes and standards.
- Cable slack, service coil, bend radii, and pathway fill ratio shall comply with applicable codes and standards.
- Metallic horizontal cable pathways shall be bonded to an approved ground according to ANSI-J-STD-607-A.
- Cable ends for termination shall be clean and free from crush marks, cuts, or kinks left from pulling operations.
- Terminate jacks according to manufacturer’s instructions.
- To maximize transmission performance, maintain wiring pair twists as close as possible to the point of termination.
- The length of wiring pair un-twist in each termination shall be less than 0.5 inches (13 mm).
- Jacks shall be properly mounted in plates, frames, or housings with stuffer cap fully installed

These standards are adopted by the Department of Technology and Information (DTI), through the Technology and Architecture Standards Committee (TASC), and are applicable to all Information Technology use throughout the State of Delaware. Any questions or comments should be directed to dti_tasc@state.de.us.

over IDC contacts.
- Horizontal cables extending from mounted jacks shall maintain a minimum bend radius of at least 4 times the cable diameter.
- Cable terminations shall have no tensile or bending strain on IDC contacts after assembly of faceplate or housing to the wall outlet.
- Jacks shall be tested as part of the installed horizontal cabling system, with faceplates assembled complete and properly mounted.
- Each link or channel in the horizontal cabling system shall be identified and tested individually, using an industry standard level III tester with correct settings.
- Each jack shall be tested as part of the horizontal channel or link for the parameters listed below.

C. Face Plates

The typical information outlet consists of a 1-Gang, 2-Port face plate for flush mounting (2) Category 6 Jacks - (1) data and (1) voice See drawings for additional information outlet configurations.

1. Face Plate Requirements

- Faceplates shall be constructed of high impact, UL94 V-0 rated thermoplastic unless otherwise shown or stated.
- Faceplates shall be 2.75" W x 4.5" H (69.8 mm x 114.3 mm) for single gang and 4.5” X 4.5” (114.3 X 114.3 mm) for double gang.
- Port size in each faceplate shall be industry standard vertical keystone opening size (.760” x .580”).
- Faceplates shall accept Hubbell XJ-series UTP jacks and Snap-Fit fiber optic, audio, and video modules for multimedia applications unless otherwise shown or stated.
- Faceplates shall provide for ANSI/TIA/EIA-606-A compliant workstation outlet labeling.
- Faceplates shall be provided with clear plastic and color-matched label field covers.
- Color-matched blank Snap-Fit modules shall be available separately to fill unused ports and openings as required.
- Two #6-32 pan head Phillips/slotted mounting screws shall be included with each single gang faceplate.
- Four #6-32 pan head Phillips/slotted mounting screws shall be included with each double gang faceplate.
- Jacks and Snap-Fit modules shall snap firmly into rear of faceplate and position flush to outer plate surface.
- Faceplates shall be compatible with standard NEMA openings and boxes.
- Faceplates shall be compatible with raceway fittings, surface mount boxes, service fittings, flush mount boxes and drywall rings.

2. Acceptable Manufacturers:

- Hubbell Premise Wiring.
  The Hubbell products listed in the table below comply with all requirements specified in this document

HUBBELL CATALOG NUMBER	Description
IFP11xx	1-Gang, 1-Port IFP Face Plate
IFP12xx	1-Gang, 2-Port IFP Face Plate
IFP13xx	1-Gang, 3-Port IFP Face Plate
IFP14xx	1-Gang, 4-Port IFP Face Plate
IFP16xx	1-Gang, 6-Port IFP Face Plate
IFP26xx	2-Gang, 6-Port IFP Face Plate
IFP29xx	2-Gang, 9-Port IFP Face Plate
IFP212xx	2-Gang, 12-Port IFP Face Plate

These standards are adopted by the Department of Technology and Information (DTI), through the Technology and Architecture Standards Committee (TASC), and are applicable to all Information Technology use throughout the State of Delaware. Any questions or comments should be directed to dti_tasc@state.de.us.

xx = Face Plate color. Replace xx with “W” for White, “BK” for Black, “GY” for Gray, “OW” for Office White, to project drawing for color applications.

- Or approved equal of: Ortronics, Panduit, Systimax

PART 12 CABLE ROUTING SYSTEMS

Each cable routing system has advantages and disadvantages. Particular systems are favored for a variety of reasons, including architectural considerations, appearances, cost, local ordinances, and material concerns.

Various means of distributing cable from Communications/Data rooms/closets to the user work areas are identified in the following:

A. Ceiling Distribution System

A distribution system within an accessible area above a false ceiling. This could either be a plenum area (where there is no enclosed system for cable routing) or an overhead conduit system (which has defined areas of access and routes).

B. “J” Hooks

Where not installed in conduits, cable trays, or other supporting devices, the horizontal wiring plan is to be installed onto “J” hooks or an acceptable equivalent from the information outlet to the termination point within the IDF or MDF/IDF room. The “J” hooks are to be installed a maximum of five feet apart and fastened to the ceiling or the top of the walls near the ceiling. The cables are to be tie-wrapped to the “J” hooks, without crimping the sheath. The cable contractor is to furnish and install the “J” hooks. Cooper B-Line BCM-21, 32, or 64 are acceptable.

C. Sleeves and Conduits

1. The use of conduits and sleeves within a building is common for the transport of communications cable. Conduits and sleeves are to be sized and routes are to be planned within and between buildings in order to route the cable plant from the MDF to IDF and IDF to Information Outlet, and to accommodate any additional cabling required. The sizing of the conduits and sleeves is to be based on the number of cables, the location and environment surrounding the sleeve or conduit, and acceptable conduit fill levels, which are typically 40%. All conduits are to be installed with the appropriate sweep to maintain the required bend radius for copper and fiber optic cable. All sleeves and conduits are to be installed with bushings and suspended according to building industry standards.

2. The following are guidelines to use in determining where sleeves and conduits are to be installed but does not limit nor identify all areas or situations where sleeves and conduits will be required.

   - All masonry walls that have cables passing through them are to have sleeves installed.
   - Gymnasiums and athletic areas are to have conduits installed to house cables passing through the and within the area.
   - Classrooms without suspended ceilings are to have conduits installed to house cables passing through and with the area.
   - Each MDF and IDF Room is to have sleeves installed to contain the large number of cables exiting the room. Conduits are to be installed in areas where cables extend from one building to another via covered or enclosed bridges and corridors.

3. Cable routing is to follow a “streets and avenues” path in corridors where possible. However, there are a number of reasons for exceptions. In some cases, the corridors do not allow cables to be run because of architectural constraints or inaccessible ceilings. Also, in order to maintain the 90-meter

These standards are adopted by the Department of Technology and Information (DTI), through the Technology and Architecture Standards Committee (TASC), and are applicable to all Information Technology use throughout the State of Delaware. Any questions or comments should be directed to dti_tasc@state.de.us.

standard for Category 6 cabling, some cables need to be run separately and diagonally to isolated information outlets. Throughout all runs, the contractor is to maintain EIA/TIA standards regarding the proximity of communications cabling to high voltage cabling, motors, transformers, fluorescent lighting, ballasts, etc.

PART 13 CABLING-GENERAL

A. All cable shall meet the requirements of the NEC, except where other authorities or codes impose a more stringent requirement or practice. Codes, such as the NEC, do not normally include transmission performance requirements. This section specifies the essential media transmission characteristics. It is advisable to consult standards associated with the planned service or equipment to determine any specific media limitations.

B. Contractor is to take all necessary precautions to assure that the maximum tensile load and minimum bend radius of all cables (fiber and copper) are not exceeded. When terminating Category 6 cable, care shall be taken to maintain pair twists up to the termination point and not more than 0.5" of the cable pairs shall be untwisted. It is preferred that the cable sheath is also not removed more than 0.5" from the termination point. Tie wraps are to be hand-tightened on cables and are not to crimp the sheath. Contractor is responsible for protecting all connectorized cables from damage by other contractors at the information outlet before and after installation of the outlet faceplates.

C. All riser and station cable installed is to be plenum-rated cable. The fluoropolymer resin that insulates Category 6 plenum cables is engineered as a fire safety innovation. The NEC requires that all cable installed in plenum spaces and not encased in conduit must have certain fire resistance and low smoke producing characteristics. Not only are such cables highly resistant to fire but they also produce very little smoke.

D. For all Voice cabling installed, "110" blocks shall be used for termination. The Copper Data cabling will be terminated onto Category 6 RJ45 Patch Panels. The fiber optic cabling will be terminated onto fiber distribution panels with SC connectors.

E. Cables shall be terminated on the appropriate unassigned (vacant) portions of the wall-mounted Main and Intermediate Distribution Frames or Patch Panels and run as uninterrupted conductor sections to the Information Outlets. All cable terminations shall be made uniformly in sequence, commencing with termination of the first cable pair on the first connection points in the upper left-hand corner of each block.

F. Minimum separation distances between pathways and power wiring of 480 V or less are shown in Table 1, below.

Table 1 Separation of Communications Pathways from <= 480V Power Lines

	Minimum Separation Distances		
Condition	< 2 kVA	2-5 kVA	> 5 kVA
Unshielded power lines or electrical equipment in proximity to open or nonmetal pathways.	127 mm (5 in)	305 mm (12 in)	610 mm (24 in)
Unshielded power lines or electrical equipment in proximity to a grounded metal conduit pathway	64 mm (2.5 in)	152 mm (6 in)	305 mm (12 in)
Power lines enclosed in a grounded metal conduit (or equivalent- shielding) in proximity to a grounded metal conduit pathway.	76 mm (3 in)	152 mm (6 in)	

All cabling shall be at least:

These standards are adopted by the Department of Technology and Information (DTI), through the Technology and Architecture Standards Committee (TASC), and are applicable to all Information Technology use throughout the State of Delaware. Any questions or comments should be directed to dti_tasc@state.de.us.

- 12” from high voltage lighting and fluorescent fixtures
- 72” from transformers and motors

PART 14 HORIZONTAL CABLING - CATEGORY 6 UTP DATA

All riser and station cable installed is to be plenum-rated cable.

A. Category 6 100 OHM balanced UTP Cable Requirements

The default cabling infrastructure shall be Category 6 unless specified otherwise.

1. Cable construction shall be four twisted pairs of 23 AWG insulated solid conductors, with a ripcord, surrounded by a tight outer jacket.
2. Conductor diameters shall be 0.0224” ± .0003” solid copper.
3. Conductor insulation diameter shall be 0.039” ± .0005” fluoro copolymer.
4. Outer jacket diameter shall be 0.235” ± .008” low smoke PVC, with a nominal wall thickness of 0.015”.
5. Ripcord shall be directly underneath the outer jacket.
6. Cable shall be marked every 2 ft including
   - Cable Manufacturer
   - Cable Description
   - Month and Year of manufacture.
   - Job number.
7. UL, ETL, or CSA agency certification or verification markings shall be marked on the cable jacket according to the certifying agency’s requirements.
8. Color coding of the pairs shall be as follows:
   - Pair 1: White/Blue; Blue
   - Pair 2: White/Orange; Orange
   - Pair 3: White/Green; Green
   - Pair 4: White/Brown; Brown
9. Cable shall be supplied in 1000 ft spools or 1000 ft Reelex boxes.

B. Category 6 100 OHM balanced UTP Cable Performance Requirements

1. All transmission performance parameters shall be independently verified by a UL or ETL third party testing organization.
2. Cable shall exceed Category 6 transmission requirements specified in ANSI/TIA/EIA-568-B.2-1, and shall be tested through 550 MHz.
3. Worst-case cable performance shall be +8.0 dB headroom over current TIA/EIA and ISO standards limits for NEXT and PSNEXT loss, and ELFEXT and PSELFEXT loss.
4. Insertion loss shall be 3.0% lower than standard Hubbell Category 6 plenum and riser cables described in Section 27 15 13.
5. Worst case electrical performance characteristics shall be as follows:
   - Characteristic Impedance: 100 + 15 (1.0-100 MHz) 100 + 20 (101-250 MHz)
   - Maximum Conductor Resistance: 9.38 /100 Meters @ 20°C
   - Maximum Resistance Unbalance: 3%
   - Maximum Mutual Capacitance: 5.6 nF/100 Meters @ 1 kHz
   - Maximum Capacitance Unbalance: 330 pF/100 Meters
   - Maximum Delay Skew: 25 ns/100 Meters
6. The manufacturer shall provide Category 6 component compliance certificates from third party testing organization upon request.
7. Cable shall be UL and C(UL) listed.
8. Cable shall exceed IEEE 802.3af DTE Power specification to 4 times the rated current limits with no

These standards are adopted by the Department of Technology and Information (DTI), through the Technology and Architecture Standards Committee (TASC), and are applicable to all Information Technology use throughout the State of Delaware. Any questions or comments should be directed to dti_tasc@state.de.us.

degradation of performance or materials.
9. Cable shall be third party verified, error free Gigabit Ethernet performance to IEEE 802.3ab.
10. Cable shall exceed the requirements of TIA/TSB-155: 10 Gb/s Ethernet Operation over 55 Meters Channel Length.
11. Cable shall meet or exceed the 4-connector channel performance requirements of Category 6, per the ANSI/TIA/EIA-568-B.2-1 standard.
12. The 4-connector channel test configuration shall utilize Category 6 jacks and patch panels, with Category 6 patch cords, from the same manufacturer, with qualified Category 6 cable.

C. Acceptable Manufacturers:

1. Hubbell Premise Wiring and Mohawk Cable.
   The Hubbell products listed in the table below comply with all requirements specified in this document

HUBBELL CATALOG NUMBER	Description
C6SPxx	NEXTSPEED Category 6 550 MHz – Plenum Spool
C6RPxx	NEXTSPEED Category 6 550 MHz – Plenum REELEX

xx = Cable color. Replace xx with "W" for White, "GY" for Gray, "B" for Blue, "Y" for Yellow. Refer to project drawing for color applications.

MOHAWK CATALOG NUMBER	Description
M58801	Category 6 – Plenum, Blue, Spool
M58804	Category 6 550 MHz – Riser, Blue, Spool

Refer to project drawing for color applications.

2. Or approved equal of: Belden, Berk-Tek, Systemax

D. Category 6 100 OHM balanced UTP Cable Installation Requirements

1. Pull cable into conduits, or place into raceway or cable tray as specified. Do not exceed 25 Lb pull force per cable. Use appropriate lubricants as required to reduce pulling friction.
2. All exposed wiring shall be installed in surface raceway.
3. All wiring above ceilings or below access floors shall be installed in cable tray or open-top cable hangers.
4. Cable slack and service loops shall be stored properly above the ceiling or under the access floor. A "figure-eight" service loop is recommended for Category 6 cabling to reduce EMI coupling.
5. Pathway fill ratio in conduit, tray, raceway, etc. shall not exceed 40% of pathway cross-sectional area.
6. Installed cable bend radius shall be greater than 4X cable diameter. Avoid kinking or twisting the cable during installation.
7. Do not over-tighten cable ties, and do not use staples or clamps to anchor cables. Velcro straps are recommended.
8. Recommended spacing of cable supports above the ceiling shall be 48".
9. Maintain the following clearances from EMI sources:
   - Power cable: 6 in.
   - Florescent lights: 12 in.
   - Transformers and electrical service enclosures: 36 in.
10. Communications cabling that must cross power cables or conduit shall cross at a 90-degree angle, and shall not make physical contact.
11. Length of each horizontal cable run from the TR to the wall outlet shall not exceed 90 meters.
12. Leave sufficient slack for 90 degree sweeps at all vertical drops.
13. Do not install cable in wet areas, or in proximity to hot water pipes or boilers.
14. Cable ends for termination shall be clean and free from crush marks, cuts, or kinks left from pulling operations.

These standards are adopted by the Department of Technology and Information (DTI), through the Technology and Architecture Standards Committee (TASC), and are applicable to all Information Technology use throughout the State of Delaware. Any questions or comments should be directed to dti_tasc@state.de.us.

15. Installed cable jackets shall have no abrasions with exposed conductor insulation or bare copper 'shiners". The installer is responsible to replace damaged cables.
16. Horizontal cables extending from mounted jacks or panels shall maintain a minimum bend radius of at least 4 times the cable diameter.
17. Firestop all cable penetrations through fire-rated barriers per local codes.

PART 15 VERTICAL DISTRIBUTION SYSTEMS

A. Riser Connectivity and Cable General

1. The cabling system shall use a fiber/copper riser cable system between the IDF rooms and the MDF within the building.

2. Copper Voice/Data Riser shall be 25-pair Category 3 plenum Copper Riser Cables Installed between each IDF and the MDF as indicated in the attached riser drawings. These cables are to be terminated onto the 110 termination blocks on the wall-mounted or rack-mounted frames in the IDF Rooms and MDF Room.

3. Fiber Riser shall be 12-strand multimode OM4 fiber optic cable is to be installed between each IDF and the MDF Room as indicated in the drawings. These cables are to be terminated onto fiber optic patch panels located in the relay racks in each of the IDF rooms and the MDF Room. The 12-strand multimode OM4 fiber cable is to be connectorized with SC connectors on both ends.

4. A plenum coaxial cable is to be installed from the MDF Head-End Room to the various IDF Rooms within the building. The cable is to be fastened to the wall- mounted plywood backboard in each floor's IDF and MDF Room with 15 feet of slack neatly coiled, tie wrapped, and left dead-ended.

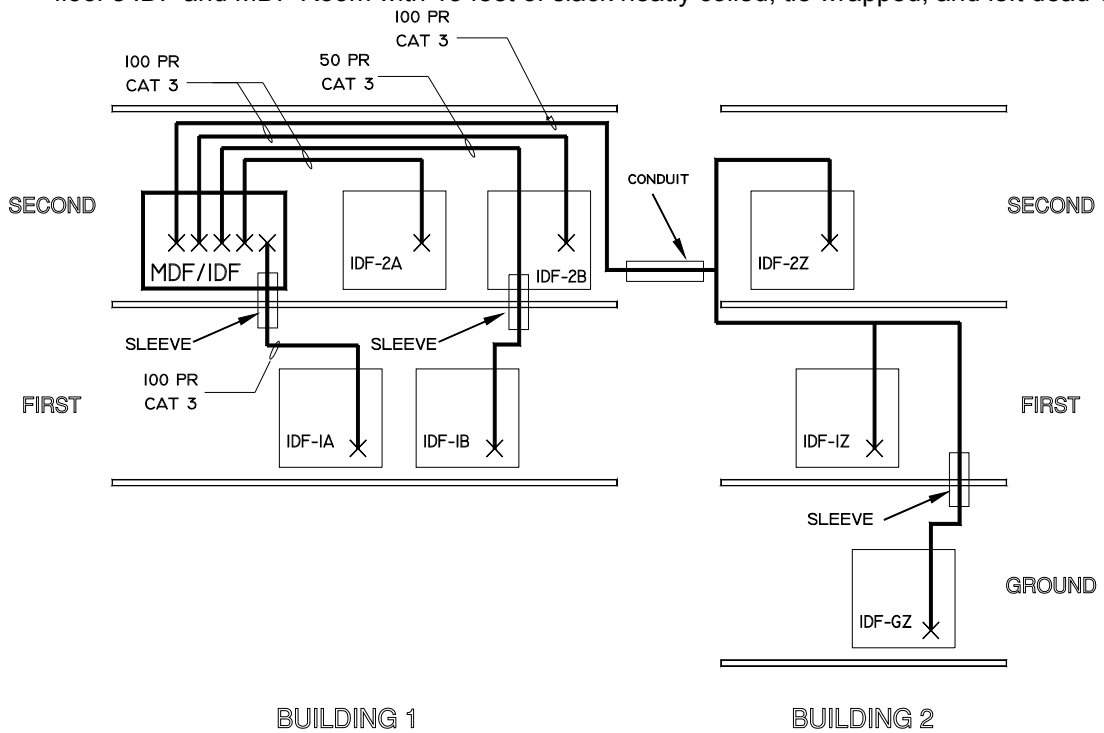

SAMPLE RISER–VOICE CABLING
SCALE: NONE

These standards are adopted by the Department of Technology and Information (DTI), through the Technology and Architecture Standards Committee (TASC), and are applicable to all Information Technology use throughout the State of Delaware. Any questions or comments should be directed to dti_tasc@state.de.us.

B. Fiber Backbone Distribution cable: indoor, non-armored

1. Fiber Backbone Distribution cable Requirements

- Optical Fiber Indoor Distribution Cable shall be constructed with 12 optical fibers, each coated with a 900 micron color-coded PVC tight buffer, surrounded by an aramid yarn strength member, and a single outer jacket with the appropriate flame rating.
- Fiber cables shall be a non-metallic construction, OFNP (Plenum FT-6) flame rating.
- Cable markings shall repeat every meter, and shall have at minimum the following information:
  a. Sequential length indicator marking (meters)
  b. Manufacturer's name and catalog number
  c. Lot number, traceable back to the fiber draw lot
  d. Date of Manufacture
  e. Fiber type: (OM4 or Singlemode)
  f. Cable rating (OFNR, OFNP, etc.)
  g. Applicable Telcordia, TIA, IEC, and ICEA standard references and appropriate UL/CSA agency listings
- Cable jacket color shall be Aqua for Laser optimized 50 micron OM4 multimode.
- Buffer position color codes shall conform to standard ICEA and TIA-598 conventions as follows:1-Blue, 2-Orange, 3-Green, 4-Brown, 5-Slate, 6-White, 7-Red, 9-Yellow, 10-Voilet, 12-Aqua.
- Optical fiber in any cable construction shall be enhanced performance, bend-insensitive type.
- Multimode OM4 cables shall perform at minimum to the attenuation, bandwidth, and distance application parameters in the table below.

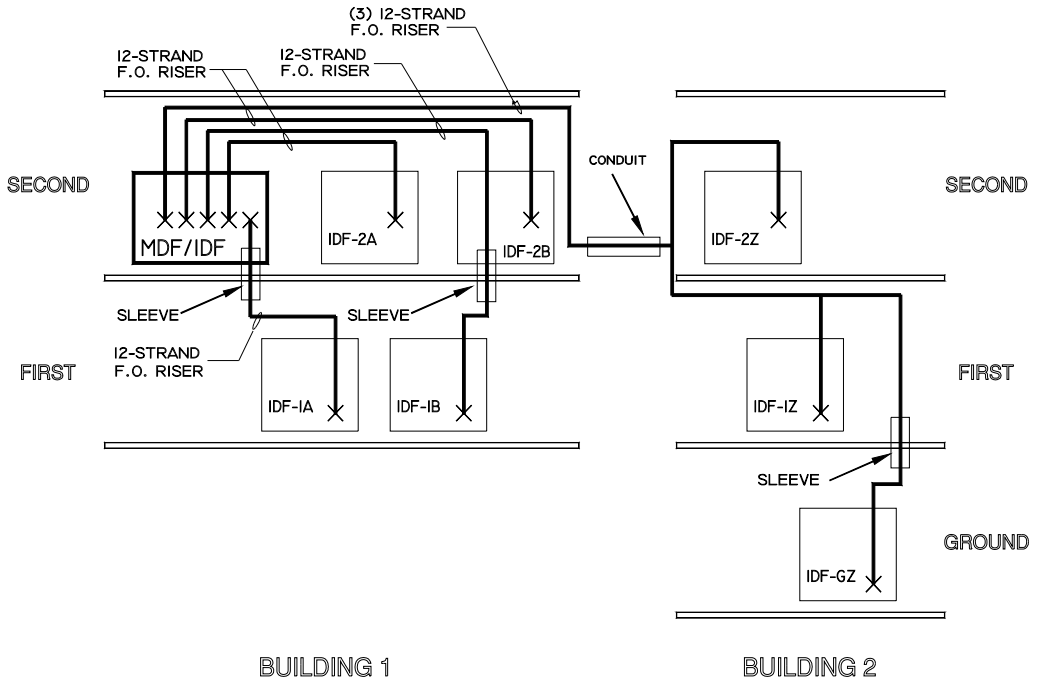

SAMPLE RISER–FIBER OPTIC CABLING
SCALE: NONE

These standards are adopted by the Department of Technology and Information (DTI), through the Technology and Architecture Standards Committee (TASC), and are applicable to all Information Technology use throughout the State of Delaware. Any questions or comments should be directed to dti_tasc@state.de.us.

Multimode OM4 Fiber Gigabit and 10 Gigabit Ethernet Application Chart					
Fiber Type	**Wavelength (nm)**	**Max Attenuation (dB/km)**	**Bandwidth (MHz•Km)**	**1 GbE Distance (m) @ 1300/850nm**	**10 GbE Distance (m) @ 1300/850nm**
MM 50 µm (OM3)	**850 / 1300**	**3.5 / 1.0**	**1500 / 500**	**1000* / 600**	**550 / 300**

** 2000m for engineered links*

- Optical fiber cables as supplied shall meet or exceed the applicable IEC 60793-1 qualification test requirements for optical, geometry, mechanical, and environmental parameters as specified, and tested in accordance with TIA/EIA-455.

2. PERFORMANCE REQUIREMENTS

- For installed fiber cables, all fiber strands shall pass insertion loss and return loss in accordance with test methods ANSI/TIA/EIA-526-14 for multimode OM4 cables.
- Installed fiber cables shall exceed all currently ratified bandwidth-distance- application performance parameters for IEEE 802.3ae (10 GbE) and for IEEE 802.3ba (40/100 GbE)
- Plenum cables shall be rated UL NFPA-262/UL910/CSA FT-6

3. Acceptable Manufacturers:

- Hubbell Premise Wiring.
  The Hubbell products listed in the table below comply with all requirements specified in this document

HUBBELL CATALOG NUMBER	Description
HFC1012P3	Fiber Optic Cable – 12-Strand MM 50 µm (OM3), Plenum, Aqua

MOHAWK CATALOG NUMBER	Description
M95048	Fiber Optic Cable – 12-Strand MM 50 µm (OM3), Plenum, Aqua

- Or approved equal of: Corning, Berk-Tek,

4. Fiber Backbone Distribution cable: indoor, non-armored Installation Requirements

- Prior to cable deployment, backbone pathways (conduit, tray, raceway, wire basket, etc.) for cable routing shall be permanently installed in compliance with contract documents, and applicable codes and standards.
- Racks, cabinets or enclosures into which cables are to be routed shall be permanently installed in compliance with contract documents, and applicable codes and standards.
- Optical fiber cables shall be deployed using the proper pulling grip or apparatus attached to the exposed cable strength member. Contact the cable manufacturer regarding permissible methods for cable pulling. Never pull directly on the fiber strands of an optical fiber cable.
- Cables shall not exceed minimum bend radius limits or maximum pulling loads during or after installation. Avoid crushing or abrasion of the cable jacket during installation.
- Installed cables shall be fully supported and strain relieved from pulling on terminated connections. Apply wire ties loosely and avoid crushing or clamping cables with excessive force.
- All non-armored fiber optic riser cables are to be installed in plenum inner-duct. Fibers in inner-duct or armored plenum riser fiber serving as riser cables are to be installed according to the attached riser drawing. Contractor to size the inner-duct for each cable run. Multiple fiber optic

These standards are adopted by the Department of Technology and Information (DTI), through the Technology and Architecture Standards Committee (TASC), and are applicable to all Information Technology use throughout the State of Delaware. Any questions or comments should be directed to dti_tasc@state.de.us.

cables can occupy an individual inner-duct when non-armored fiber is not used.

PART 16 CAMPUS CABLING

A. Outside Plant Cabling

1. The contractor is to follow the drawings regarding the installation of outside plant (OSP) cabling to buildings remote from the main building, such as portable rooms, trailers, other small buildings, etc. Many remote buildings can be served by conduits underneath or within ceilings of protected overhangs and bridges.
2. The contractor is to furnish and install outside plant cables and associated protector blocks, splice cases, and grounding where applicable in an approved manner.
3. The contractor will be responsible for obtaining all required right-of-way easements and permits before any excavation on the property begins.
4. Outside plant optical fiber cable shall be 50/125 multimode OM4 laser-optimized or Singlemode strands loose-buffer tube water- blocking for outside plant application.
5. Outside plant copper cable will be solid insulated conductors 24 AWG with gel-filled core in 25-, 50-, or 100-pair increments.
6. RG-11 coaxial cable rated for OSP use will be used between buildings. Outside plant cables are to be routed aerially, underground, or buried by designed. Contractor may provide recommendations as to cable routing for approval.
7. Where noted, the contractor is to use aerial plant cabling between buildings. In cases where cables are attached to poles or buildings, aerial spans are not to exceed 100 ft from the last pole to the building, using slack span construction (no guying at either end). EIA/TIA guidelines and NEC code are to be strictly adhered to for separation and clearances from power lines and traffic.
8. Underground Cable is to be enclosed in conduit buried at least 24 inches below ground surface. In situations where fiber optic cables will be used, inner-ducts will be placed inside conduits to ensure physical protection for the cable. Proper fill ratios must be observed as well as proper bend radius. Metal sleeves through the foundation will be used to prevent conduit shearing. Sleeves must extend from inside the foundation wall to a minimum of 12”. The end of the conduit within the building must be securely fastened to withstand the placing of cable. Sleeves are to be sealed with plugs or sealant. Conduit must be bounded and grounded in compliance with EIA/TIA and NEC requirements.
9. Minimum depth of trench should allow for 24 inches of cover from top of cable to final grade. Upon refilling the trench, the soil must be tamped to prevent sunken trench appearance. Conduit sleeves will be used for penetrations through foundation walls, using the same guidelines as for underground cable. OSHA regulations concerning shoring requirements must be followed during all phases of buried cable installation. Contractor must install buried cable so as to meet minimum separation distances from adjacent structures (power, gas, water, etc.) To minimize the chance of accidental dig-up, contractor will install detectable warning tape a minimum 18 inches above cable.
10. Multi-pair protector blocks shall be installed to provide protection from voltage surges and sneak current. The protector panel shall be equipped with 110 wiring block and solid state protector units type 4C, and others depending on the situation. Project Manager will coordinate with contractor.

These standards are adopted by the Department of Technology and Information (DTI), through the Technology and Architecture Standards Committee (TASC), and are applicable to all Information Technology use throughout the State of Delaware. Any questions or comments should be directed to dti_tasc@state.de.us.

Protector panels shall be installed within 50 feet of each outside plant cable building entry point. Protector panels must be grounded and bounded to the building grounding system.

11. Splice cases shall be provided and installed at both ends of outside plant cables. Splice cases shall be used for cable transition from to inside plant cables.
    - Fiber optic splice cases shall be designed to seal, bind, anchor, and protect cable splices and transition points from outside plant to inside plant cables. The case shall be fully equipped with a suitable splice kit for the fiber quantities specified.
    - Copper splice case shall be designed for use with non-pressurized cable. The case shall be of a durable fire-retardant material, single piece with a hinged cover. The case shall be equipped with a cable entrance end plates assembly of adequate size to accommodate entering and exiting cables, ground straps, and all necessary termination, mounting hardware.

12. Pedestal/Cabinet shall have a heavy gauge galvanized steel housing or equivalent and be weather-resistant for the termination of copper and fiber optic cables. It shall be equipped with ground bar, protector blocks, and adequate space for splice cases to accommodate transition of cables into or out of the cabinet. Pedestal/Cabinet size dependent upon each situation.

13. All OSP cables will be grounded according to EIA/TIA and NEC standards and codes.

14. Contractor is to install a RG-11U Plenum Coaxial cable between the CATV Head-End Location and the MDF Room. These cables are not to be terminated, but must be neatly coiled and tie-wrapped with 40 feet of slack cable remaining at each end.

PART 17 PATCH CABLES

A. Patch cables should meet the minimum performance requirements specified for each system. This requirement specifically prohibits the use of flat, non-twisted (also known as "silver satin") cords for Data or local area network applications. However, "silver satin" patch cables are acceptable for use in telephone systems.

B. Fiber Patch Cords (Fiber patch cords shall be Owner provided. This section is for reference only.)

1. Fiber Patch Cord Requirements

- Provide factory-made, dual SC fiber cables in 1-Meter lengths for every fiber cable installed.
- SC Optical fiber patch cords shall be constructed with aramid-reinforced PVC loose-jacket duplex cable, with optical fibers having a 900-micron PVC buffer coating diameter. Optical fiber used in 10 GbE patch cords shall be laser optimized 50 micron multimode OM4, per ANSI/TIA/EIA-492AAAC, with no substitutes.
- Multimode OM4 50 micron core optical fiber within the patch cord cable shall be graded index type in accordance with ANSI/TIA/EIA-492AAAC, with the following specifications:
    a. Core diameter: 50 +/-3.0 microns
    b. Cladding diameter: 125 +/- 2.0 microns
    c. Core/cladding concentricity: less than 3.0 microns
    d. Core non-circularity: 6% maximum
    e. Proof test: 100 kpsi
    f. Effective modal bandwidth: 2000 MHz•km
    g. Coating diameter: 245 +/-15 microns
    h. Buffer diameter: 900 microns nominal
    i.
- Connector terminations on each end of the fiber patch cord shall be heat-cured epoxy type with a machine polish, inspected 100% for polish quality and mated-pair insertion loss.
- Epoxy volume within each connector shall be sufficient to properly surround and strain relieve the fiber

These standards are adopted by the Department of Technology and Information (DTI), through the Technology and Architecture Standards Committee (TASC), and are applicable to all Information Technology use throughout the State of Delaware. Any questions or comments should be directed to dti_tasc@state.de.us.

and buffer layer at the buffer/fiber transition inside the connector body.

- Optical fiber patch cords shall be supplied in a sealed plastic bag with dust caps installed on each end, with insertion loss test results included.
- Optical fiber patch cords shall be available in standard lengths of 1, 2, 3, and 5 meters.
- Optical fiber patch cords shall be manufactured with industry standard SC connector terminations on each end.
- Factory mounted connectors on each end of the patch cords shall comply with the applicable ANSI/TIA/EIA-604 Intermateability standard.
- Buffered fiber strands within the cable jacket shall be surrounded by aramid (Kevlar) material serving as a strength member.
- The aramid (Kevlar) strength member shall be mechanically secured at each connector to provide tensile strain relief of the optical fiber.
- Additional strain relief of the buffered fiber shall result from crimping the rear of the connector during termination.
- Duplex fiber patch cords shall be a zip-cord cable construction with jacket cross-section dimensions of 3.0 mm X 6.0 mm for SC style. \
- Duplex fiber patch cords shall have reverse-pair polarity according to ANSI/TIA/EIA-568-B.3 and TIA/EIA-TSB-125.
- Cable jacket shall be marked with the cable manufacturer, UL Optical Fiber Non-Metallic Riser rating (Type OFNR) designation, lot number, and fiber core/cladding diameter designation.
- Fiber A-B polarity shall be clearly marked on each end of duplex patch cords.
- Optical fiber patch cord jacket color shall be aqua blue, specifically for 50 micron laser optimized multimode OM4 fiber cables.
- Fiber patch cord connector materials shall be as follows:
  a. SC Ferrules: zirconium ceramic
  b. SC housings: injection molded thermoplastic
  c. Dust Cap: nylon or PVC
  d. Strain relief boot: UL94-V0 molded PVC
  e. Strain relief boot on all connectors shall be beige.
  f. SC connector outer housing shall be beige.

2. Fiber Patch Cord Performance Requirements

- Multimode OM4 50 micron laser optimized patch cords shall have a maximum mated-pair insertion loss of 0.60 dB per end, with a minimum return loss of –20 dB.
- Fiber patch cords shall exceed 10 Gigabit Ethernet performance requirements of IEEE 802.3 standard.
- Fiber patch cords shall exceed the mechanical reliability requirements for tensile, flex, twist and impact as specified in ANSI/TIA/EIA-568-B.3, Annex 'A'.
- Fiber patch cords shall exceed the environmental reliability requirements for high/low temperature and humidity as specified in ANSI/TIA/EIA-568-B.3, Annex 'A'.

3. Acceptable Manufacturers:

- Hubbell Premise Wiring.
  The Hubbell products listed in the table below comply with all requirements specified in this document

HUBBELL CATALOG NUMBER	Description
DFPCSCSCExMM	SC-SC Optical Fiber Patch cords, 50/125 MM, Aqua

x = Length. Replace x with standard lengths of 1, 2, 3, 5 meters

- Or approved equal of: Ortronics, Panduit, Systimax

C. Category 6 Patch Cords

The default cabling infrastructure shall be Category 6 unless specified otherwise.

1. Category 6 Patch Cord Requirements

- The contractor shall provide Category 6 Patch Cords only where called for on the drawings.

These standards are adopted by the Department of Technology and Information (DTI), through the Technology and Architecture Standards Committee (TASC), and are applicable to all Information Technology use throughout the State of Delaware. Any questions or comments should be directed to dti_tasc@state.de.us.

- Category 6 patch cords shall be constructed with a clear polycarbonate plug and boot having vertically staggered, trifurcated contacts, each having 50 micro-inches of gold plating.
- Plug dimensions and function shall comply with FCC 47, Part 68.5.
- Patch cords shall have a snag-less feature, integral to the strain relief boot on each end.
- Patch cords shall be constructed with category 6 patch cable, with 24 AWG 7/32 tinned copper stranded conductors, each insulated with polyethylene, and overall jacket with UL flame-retardant PVC.
- Patch cords shall be manufactured using a T568B wiring format, and shall function suitably for either T568A or T568B wiring schemes.
- Patch cords shall be available in the following colors: black, blue, gray, yellow, orange, red, green, white, and purple. Custom lengths and colors shall be available with a delivery lead-time quotation.
- Standard patch cord lengths shall range from 3 ft. to 20 ft.

2. Category 6 Patch Cords

- All transmission performance parameters shall be independently verified by a UL or ETL third party testing organization.
- Category 6 patch cords shall be channel performance balanced with Hubbell category 6 jacks, patch panels, and punch-down blocks.
- Category 6 patch cords shall meet or exceed Category 6 component transmission requirements for connecting hardware, as specified in ANSI/TIA/EIA-568-B.2-1 standard.
- The manufacturer shall provide Category 6 component compliance certificates from third party testing organization upon request.
- Patch cords shall be cUL and UL LISTED 1863.
- Patch cords shall exceed IEEE 802.3 DTE Power specification to 4 times the rated current limits with no degradation of performance or materials.
- Patch cords shall be third party verified, error-free Gigabit Ethernet performance to IEEE 802.3 standard.
- Jacks shall exceed 4 Gb/s data transmission capacity within the bandwidth of 1 – 250 MHz when configured in a 4-connector channel.
- Category 6 patch cords shall meet or exceed the 4-connector channel transmission performance requirements of Category 6, per ANSI/TIA/EIA-568-B.2-1 standard.
- The 4-connector channel test configuration shall utilize Category 6 patch panels, blocks, and jacks,

3. Acceptable Manufacturers:

- Hubbell Premise Wiring.
  The Hubbell products listed in the table below comply with all requirements specified in this document

HUBBELL CATALOG NUMBER	Description
HC6xx03	Category 6 Patch Cord, 3FT
HC6xx05	Category 6 Patch Cord, 5FT
HC6xx07	Category 6 Patch Cord, 7FT
HC6xx010	Category 6 Patch Cord, 10FT
HC6xx15	Category 6 Patch Cord, 15FT
HC6xx20	Category 6 Patch Cord, 20FT
HC6xx25	Category 6 Patch Cord, 25FT

xx = Cable Color. Replace xx with “W” for White, “BK” for Black, “B” for Blue, “GY” for Gray, “GN” for Green, “P” for Purple, “OR” for Orange, “R” for Red, “Y” for Yellow. Refer to project drawing for color applications.

- Or approved equal of: Ortronics, Panduit, Systimax

PART 18 FIRE STOP - PENETRATION SEALANT

A. Provide fire-resistant silicone foam fill to restore fire ratings to all wall, floor, or ceiling penetrations. Foam must be UL classified and meet NEC and local code.

B. All penetrations through fire-rated floors and walls shall be sealed to prevent the passage of smoke, fire, toxic gas, or water. The fire rating of the penetration seal shall be at least that of the floor or wall

These standards are adopted by the Department of Technology and Information (DTI), through the Technology and Architecture Standards Committee (TASC), and are applicable to all Information Technology use throughout the State of Delaware. Any questions or comments should be directed to dti_tasc@state.de.us.

into which it is installed, so that the original fire rating of the floor or wall is maintained as required by Article 300-21 of the National Electric Code.

C. No flammable material may be used to line the chase of the hole in which the fire stop material is to be installed.

D. When damming materials are to be left in place after the seal is complete, then all such materials shall be non-flammable.

E. The sealant shall be poured into the hole after each cable has been spread to allow a minimum of ½" of foam to flow between them. No cables may be touching each other, because contact between cables could allow voids to form in the fire stop.

F. If plastic cartridges are used for smaller installations, the chemical components of the foam shall be pre-measured within the cartridges to ensure the proper ratios.

G. The sealant shall remain resilient and pliable to allow for the removal and/or addition of cable without the necessity of drilling holes. It shall adhere to itself perfectly to allow any and all repairs to be made with the same material. It shall allow for vibration, expansion, and/or contraction of anything passing through the penetration without affecting the seal, or cracking, crumbling, and spalling.

H. When sealant is injected into a penetration, the foam shall expand to surround all the items within the penetration at that time and be fire resistant, maintaining the pass-minute rating.. No heat shall be required to further expand the foam to block the passage of fire and smoke or water.

I. The foam sealant material shall have been subjected to fire exposure testing in accordance with standard time-temperature curve in the Standard, UL, ASTM E

J. 119, and NJPA 251. The foam fire-stop material shall also have been subjected to the hose stream test in accordance with UL 10B.

PART 19 TESTING

A. General Test Procedures

1. Before an application for final acceptance of the work will be considered, all tests stated within this section shall be satisfactorily completed. The communications work shall include miscellaneous tasks, (e.g., removal of panel trims, junction, and pull box covers) deemed necessary to demonstrate compliance with the requirements of the Communications specifications, as well as cable and equipment manufacturers' recommended installation procedures.

2. Upon completion of testing and problem resolution, all connections must be 100% error free: "Error free" is defined to mean the item meets all the manufacturers' specifications and recommendations as published in their latest manufacturing manuals for proper installation and testing. In addition, each item must conform with all other related industrial practices and standards, Building Trades, and Electrical and Communications Industry Standards and Practices.

3. Upon successful completion of each item of testing, the Contractor shall issue in writing a certificate of compliance, along with the test results, to the Project Manager. All failed CAT-6 cables and/or Fiber strands shall be clearly labeled and identified as defective, with the type of defect (i.e. open ring side, grounded tip, short, excessive loss, etc.) identified.

4. The Contractor shall remedy any defective copper cable pair or Fiber cable strand. The Fiber trouble location and identification must be completed with an OTDR.

B. Copper Cable Test Procedures

1. Contractor must complete cable system performance verifications on all copper and fiber cable as specified below and provide the test results to the owner or project manager. Category 6 cable must meet or exceed all manufacturer's and EIA/TIA standards for performance and installation. Fiber cable must also meet or exceed all manufacturer's and EIA/TIA standards for performance

These standards are adopted by the Department of Technology and Information (DTI), through the Technology and Architecture Standards Committee (TASC), and are applicable to all Information Technology use throughout the State of Delaware. Any questions or comments should be directed to dti_tasc@state.de.us.

and installation.

2. All copper and fiber optic testing documentation is to be submitted on a CD, as well as 8.5” x 11” hard copies.

3. At a minimum, in addition to any other required testing, the Contractor shall conduct and report on the following tests of copper cabling after the installation is complete:

   - MDF-to-IDF tests of all riser pairs installed under this contract, to determine continuity, shorts, crossed pairs, correct pinning, and grounds.
   - IDF (110 frame or patch panels)–to-information outlet tests of all cable pairs installed under this contract, to determine continuity, shorts, crossed pairs, correct pinning, and grounds.
   - The coaxial cable is to be tested from the MDF Room to the IDF Room and from the IDF Room to the coax outlet. Contractor is to test for continuity, shorts, and grounds.
   - The horizontal Category 6 cabling, installed from the IDF Room to the Information Outlet at the workstation, is to be manufacturer certified and warranted for Category 6 compliance. All manufacturers’ performance certificates and extended warranties are to be provided to the owner or project manager upon completion of the testing and manufacturer certification. Contractor is to present copies of certificates identifying the contractor as a current certified VAR for the selected cabling system and therefore, qualified to install a certified cable plant.
   - All category 6 cabling is to be tested end–to-end and documented for Category 6 compliance at all frequencies up to and including 500MHz for Category 6. Such testing is to comply with the procedures and standards outlined by the cable manufacturer and EIA/TIA TSB - 67 concerning testing of Category 6 cable plant.
   - A certified Cat 6 testing system is to be used for such testing to insure that cable pairs are defect free. "Defect free" for the copper cable is defined as a copper pair not having any pair reversals, split pairs, shorts or opens. Test results shall be provided to the Owner or Project Manager within 2 days after testing or 5 days prior to the Owner connecting electronic equipment onto the cable network, whichever is sooner. The contractor must also provide testing summary reports of all category 6 cables including run numbers, and pass/fail results with respect to length, impedance, DC resistance, mutual capacitance, attenuation, NEXT loss, and active ACR. The contractor must also provide spreadsheet analysis of the linearly dependent parameters of length, DC resistance, mutual capacitance, and attenuation; the field measured values shall be compared to the specifications values on one spreadsheet.
   - In the event that a CAT-6 cable fails to perform to the manufacturer's specifications, the Contractor will, at the owner’s request, remove the cable and replace it with a new cable, replacing the defective cable at no additional expense to the owner.
   - End-to-end testing is required for every RJ-45 connection. An owner's representative may accompany the Contractor’s staff to witness the end-to-end testing. End-to-end testing is defined herein as testing all cabling links to the very last termination point. The Contractor is required to supply sufficient quantities of two-way radios and test equipment to ensure that the tests are completed accurately and expeditiously.
   - The Owner, DTI, or Project manager may conduct performance tests of transport electronics connected to the cabling system. Successful equipment performance tests do not relieve the Contractor from the specified testing, repair, and documentation requirements.
   - The Contractor shall provide to the Owner or Project Manager with copies of all copper-cable test results.

C. Fiber Optic Cable Test Procedures

1. All fiber optic cable and associated equipment lateral, and vertical riser cabling must be thoroughly tested. The fiber cable will be accepted only after each strand is tested in accordance with the specifications defined herein. All strands are to be tested and found to be 100% acceptable.

2. The Contractor shall test all cables, connectors, associated equipment, and hardware furnished by the Contractor upon receipt of same as defined herein.

3. As a minimum, the Contractor shall test, as described below, all optical fiber cable strands installed within the scope of this proposal:

These standards are adopted by the Department of Technology and Information (DTI), through the Technology and Architecture Standards Committee (TASC), and are applicable to all Information Technology use throughout the State of Delaware. Any questions or comments should be directed to dti_tasc@state.de.us.

- Fully test complete links only. Piecemeal testing is not acceptable.
- Perform end-to-end, bi-directional attenuation (loss) test for each fiber strand at 850nm and 1300nm wavelengths. Conduct tests in accordance with EIA/TIA-526-14, Method B and with test instrument manufacturer's published instructions.
  a. Demonstrate that measured link loss does not exceed the expected value based on the number of mated connector pairs, the connector's published loss per mated pair, and the cable's published loss based on distance.
  b. Strands whose measured attenuation falls outside the acceptable range shall be subject to further inspection and testing to determine the nature of the fault. At a minimum, an OTDR shall be used to: determine the true loss for each connector pair and the exact length of the fiber, and to identify the presence of any core damage.
  c. Riser end-to-end testing of individual optical fibers is considered to be from the MDF Room to the IDF Rooms distribution panels on each floor.
  d. Horizontal end-to-end testing of individual optical fibers is considered to be from each floor's IDF Room's Fiber Distribution Panels to the Information Outlet.
- Faults related to connectors shall be corrected and the fiber re-tested as stated above until acceptable attenuation measurements are received.
- Where defects are found to be inherent in the fiber itself, notify the Project Manager in writing. Upon obtaining approval by the Project Manager, replace any cable having fewer than the manufacturer's guaranteed number of serviceable fibers.
- Remove all newly installed defective cables from pathways. Do not abandon cables in place.
- All test results and corrective procedures are to be documented and submitted as a spreadsheet to State/DTI within five (5) working days of test completion.
- Considering that the fiber cable plant is to be certified, each test report form shall provide at least the following information:
  a. Project name
  b. Contractor's name
  c. Date(s) of preparation and of testing
  d. Fiber type, strand count, connectors and patches
  e. Designated cable number (regardless of whether only one cable of each type is present) and individual fiber numbers
  f. Make, model, serial number, and date of last calibration of test equipment used
  g. Name of test crew foreman
  h. Test results: Calculated maximum link loss, length of run, OTDR, and also
  i. Power Meter-measured link loss for each fiber, pass/fail result, and comments.
- In addition to the tests specified above, the Contractor shall be present while the Owner or Project Manager conducts performance tests of the transport electronics connected to the cabling system; the contractor shall conduct on- the-spot cable tests and effect cable plant repairs as necessary. Successful equipment performance tests do not relieve the Contractor from the specified testing, repair, and documentation requirements.

- Recommended test equipment:
  a. Optical fiber power meter and Light Source: Siecor CPM-850/1300 meter and OS-100D Light Source, or equivalent.
  b. TDR: Tektronix TFP2 FiberMaster, Laser Precision TD-2000 or equivalent with 850nm and 1300nm emitter modules and hard copy printout, or equivalent.
  c. Optical fiber inspection scope: Cambridge Instruments 10x fiber scope, or equivalent.

- The Contractor shall provide copies of all fiber and copper cable test results to the Owner or Project Manager.

- All fiber optic cabling (workstation and riser) is to be installed in a manner that complies with and allows Owner to receive the manufacturer's extended warranty. The contractor is to be certified and authorized to provide the extended warranty. A manufacturer's extended warranty is to be provided, through the

These standards are adopted by the Department of Technology and Information (DTI), through the Technology and Architecture Standards Committee (TASC), and are applicable to all Information Technology use throughout the State of Delaware. Any questions or comments should be directed to dti_tasc@state.de.us.

contractor, upon completion of the testing and manufacturer's certification. Contractor is to present copies of certificates identifying the contractor as a current certified VAR and therefore, qualified to certify and install the cable plant.

- The Owner and Project Manager reserves the right to observe any or all portions of the testing. Notification of testing is at least three days prior to start of testing.

D. Replacement

Any fiber strand, connector, block, or module installed by the Contractor that fails to meet the loss budget, or that tests below the manufacturer's standards, shall be replaced at no additional cost to the owners or State/DTI. The replacement cable, connector, or part shall be tested after repairs have been made to verify compliance. Only equipment that meets the installation requirements stated herein shall meet the system's acceptance requirements.

E. Source Manufacturing/Quality Control

Cables that are supplied by the Contractor, and test outside of the factory test data by a margin of 10 percent on loss, may be deemed non-usable and returned to the manufacturer for replacement.

F. Physical Inspection

Prior to conducting any transmission testing, the following visual inspections will be performed:

1. Verify that all cable has been installed in full compliance with the proposal specifications.
2. Check for physical damage to the Fiber Distribution Panels and termination hardware.
3. Check that all cabling is properly jacketed, installation properly labeled at both ends of the cable, inner-duct and termination hardware is completed in all IDFs and the MDF Room.
4. Verify that all cable bends are within the manufacturer's specified bend radius.
5. Verify that all cabinets and racks (which require grounding) are properly grounded and comply with the National and Local Electrical Codes and State Standards for grounding.
6. Verify that the cables are properly approved and structurally supported for termination.
7. Verify that all Delaware Fire Code requirements have been met and satisfied.

G. DOCUMENTATION

Proper labeling and documentation will allow a technician to quickly trace a particular cable link and will significantly reduce the time and costs of moves, additions, changes, and troubleshooting. Both labeling and documentation depend on the use of a system-wide coding scheme that will identify and locate each component of the wiring system and allow all components to be linked in a logical fashion.

1. There are three components of wiring system documentation:
   - Labeling Communications/Data room/closet termination areas aids in identifying the source and function of a circuit.
   - A labeling scheme simplifies the documentation process.
   - "As built" documents provide a permanent record of the communications infrastructure. These documents are a critical management resource. As a result, it is imperative that "as built" documentation be prepared as part of the communications infrastructure project. In addition, these documents must be kept current

These standards are adopted by the Department of Technology and Information (DTI), through the Technology and Architecture Standards Committee (TASC), and are applicable to all Information Technology use throughout the State of Delaware. Any questions or comments should be directed to dti_tasc@state.de.us.

throughout the system's life cycle.

2. Termination Blocks

Labels on the connecting hardware should be coded based on the function of the terminated wiring. Colored designation strips are typically provided with a termination block.

3. Cable and Information Outlet Identification

The Contractor shall furnish and install cable tags labeled with identifying cable numbers mutually agreed upon with contractor and the Owner or Project Manager.

- The Contractor shall clearly and consistently mark the appropriate designation strip labels on all termination hardware mutually agreed upon with the Owner or Project Manager. Contractor will submit a sample of all designation labels for approval before installation.
- The Contractor shall affix outlet identification labels, machine printed or typed, with identifying cable numbers as shown on the attached drawings.
- Subsequent to pulling and terminating cables, the Contractor shall place the appropriate cable tags within six (6) inches of each end of each copper cable and eighteen (18) inches of each optical fiber cable end.
- If the cable tape becomes illegible or is removed at any time during the job, the
- Contractor shall immediately replace it with a duplicate preprinted cable tag.
- The Contractor shall provide the Owner or Project Manager with a listing of all cable identification numbers, keyed to cable types.
- Contractor will label each information outlet with the following labeling scheme: If the 1st floor IDF closet "A" is the origination point of the cable feeding workstation "007" the following is the configuration of the label to be installed:
- Floor- IDF Closet - Information Outlet Number
- Example: 1A-B101-01, 1A-B101-02, etc.
- Contractor will submit for approval a sample of all information outlet designation labels.

H. "As-Built" Documentation

Maintaining records and documents is the most important portion of the administration of a communications infrastructure. Maintenance and moves, additions, and changes can become very difficult if a current set of records and documents is not maintained. In fact, isolation and resolution of problems are often delayed because configuration information is either unavailable or outdated.

Subsequent to the installation and prior to acceptance, the Contractor shall prepare and issue As-Built drawings, in an AutoCAD format, that shall reflect the lengths of cables installed and the actual manner and conditions of installation, including all deletions from, additions to, or departures from the contract documents. These documents are to include the information outlet station numbers and cable routing where they vary from the original plan. A copy of these documents will be stored in the MDF, with a master copy located at the Owner or Project Manager.

I. Cable Management System

Wiring and equipment relationships must be maintained in a database or spreadsheet (depending on their complexity). The best approach is to use a third- party vendor's application for tracking cable management. These records contain comprehensive information about the users' communications configuration. The information will be very valuable in the support of long-term user-community communications requirements.

PART 20 APPENDIX A – COMMUNICATIONS PLANNING CHECKLIST

A. Not Used

PART 21 APPENDIX B - CABLE INSTALLATION CHECKLIST

A. Check Local Building Codes

The requirements stipulated by Section 800 of the National Electrical Code for Communications cable installations produce an orderly installation. However, it is important to consult your building inspector to determine whether there are special local requirements. Strapping requirements depend upon the building's design, State and Local Standards, and codes. Terminations can be made in standard junction boxes.

B. Coordinate with Other Contractors

Plan to install the cabling system in new buildings after the power wiring, air- handling ducts, and ceiling supports have been installed, but before the ceiling tiles are in place. This will prevent damage to the cable system during construction.

C. Plan the Job

On a blueprint, mark all terminations and desired routings, if known, to accommodate future building modifications.

D. Label the Cables

Label each cable reel and its free end according to the termination locations marked on your blueprint.

E. Pull Cable into Place

Deliver the cable from the bottom of each reel, making sure not to kink, crush, or pinch the cable. Pull groups of cables to a logical point and then fan out to the individual termination points. Arrange the cables neatly so they are easily identifiable for relocation. Separate the Communications cables from other cables by at least six inches and avoid sharp edges, tight bends, and locations that would subject the cable to abrasion, corrosion, or moisture. According to the National Electrical Code, low-voltage cables cannot share a tray with power cables. Running signal cables close to power cables may also cause hum pickup. If in doubt about cable locations, consult the standards or the Owner.

F. Remove Slack

Remove slack in lines by pulling the cables back to the wiring room and by adjusting their ceiling location as needed.

G. Label and Cut

Label each cable and then cut it off, making sure to leave enough cable to reach the termination panel.

H. Tie Cables Together

Use cable ties to bundle and secure parallel runs together. Place the ties at intervals sufficient to prevent sagging and to maintain neatness. Distances between ties may vary from six inches to four feet, depending on the size of the cables.

I. Strap the Cable

Use straps to fasten the tied cable bundles to hangers at 4-foot or other appropriate intervals. The distance between hangers will vary from 3 to 20 feet, depending upon the strapping surface, the type and number of cables in each bundle, State and Local Standards, and codes. Make sure to support the cables with hangers rather than pipes, conduit, or other structures in the building plenum. Do not use

These standards are adopted by the Department of Technology and Information (DTI), through the Technology and Architecture Standards Committee (TASC), and are applicable to all Information Technology use throughout the State of Delaware. Any questions or comments should be directed to dti_tasc@state.de.us.

straps that are too small for the cable diameter because they can cut or pinch the cable insulation.

J. Inspect the Job

Be sure that the cables are not resting on false ceilings or near electrical fixtures or sagging more than three inches from the point of the tie wrap.

PART 22 APPENDIX C - QUALITY ASSURANCE

A. All materials used shall bear the Underwriters' Laboratory, Inc. label, provided a standard has been established for the material in question.

B. All products and materials shall be new and unused, clean, and free of defects, damage, and corrosion.

PART 23 APPENDIX D - CODES, REGULATIONS AND STANDARDS

A. All installations and equipment shall be in compliance with, equal to or exceed the minimum requirements of OSHA, NEC, NEMA, IEEE, SAME, ANSI, UL, EIA, TIA recommendations and the rules, regulations and requirements of the Federal Communications Commission.

B. The installation shall comply fully with all applicable Local, County and State of Delaware laws and ordinances, regulations, and codes.

C. Local electrical and building codes in Delaware may be more restrictive than national codes, recommendations or practice. Follow the most restrictive code or recommendations.

D. Should any change in plans or Specifications be required to comply with governmental regulations, the Contractor shall notify the Owner or Architect/Engineer at the time of submitting the construction schedule.

PART 24 APPENDIX E - WARRANTY

Besides the manufacturer's extended warranty the Contractor shall submit a single Guarantee stating that all portions of the work are in accordance with Contract requirements and guaranteeing all work against faulty and improper material and workmanship, including work and materials of all subcontractors, manufacturers, suppliers, and sub trade specialists, for a period of one (1) year from date of final acceptance by the project manager, State/DTI, and Owner. Where guarantees or warranties for longer terms are provided, such longer terms shall apply. Within 24 hours after notification, the Contractor shall correct any deficiencies that occur during the guarantee period at no additional cost to Owner, all to the satisfaction of the Project Manager and or Owner.

When installed by a Certified Installer and used in a Structured Cable System, the manufacturer's extended warranty shall cover the installation for a period of 5 years against defects in material and workmanship. It shall also guarantee that it will support any current and future applications designed for Data transmission over the 100/500MHz link/channel, as defined in TIA/EIA 568A Communications Standard.

All move, add and change (MAC) activity shall be covered by the warranty provided it is performed by a Certified Installer.

PART 25 APPENDIX F - BID/QUOTE RESPONSE FORMAT

A. Not Used

PART 26 APPENDIX G —CERTIFIED CONTRACTOR LIST

http://contracts.delaware.gov/contracts_detail.asp?i=79

These standards are adopted by the Department of Technology and Information (DTI), through the Technology and Architecture Standards Committee (TASC), and are applicable to all Information Technology use throughout the State of Delaware. Any questions or comments should be directed to dti_tasc@state.de.us.