SECTION 11 4000

FOODSERVICE EQUIPMENT

PART 1 - GENERAL

1.01 DESCRIPTION

A. Scope: Furnish all labor, materials, services, equipment and appliances required to provide and deliver all foodservice equipment hereinafter specified into the building, uncrate, assemble, hang, set-in-place, level, and completely install, exclusive of final utility connections.

B. Related Work Specified Elsewhere:
   1. All plumbing, electrical and ventilating work required in conjunction with commercial foodservice equipment including rough-in to points indicated on mechanical drawings, and final connections from rough-in points, electrical service to points of connection and final connections shall be by Divisions 22, 23 and 26.
   2. Refrigeration work will be done by the Kitchen Equipment Contractor except for electrical connections to and between compressors, blower coils, controls, etc. These final connections shall be by Divisions 22 and 26.
   3. All traps, steam traps, grease traps, line strainers, tail pieces, valves, stops, shut-offs, and fittings necessary for equipment specified will be furnished and installed under mechanical contract by Division 22 unless specifically called for otherwise under each item.
   4. All line and disconnect switches, safety cut-offs and fittings, convenience boxes or other electrical controls, fittings and connections will be furnished and installed under electrical contract by Division 26, unless specifically indicated otherwise in the item specifications. Starting switches for certain specified pieces of foodservice equipment are to be provided by Kitchen Equipment Contractor. Those starting switches, if furnished loose as standard by Foodservice Manufacturers (other than fabricated items), shall be mounted and wired complete under Division 26.
   5. Any sleeves or conduit required for refrigeration, syrup tubing, or carbonation tubing will be furnished and installed under Division 22.
   6. Unless specifically called for in the Item Specifications, ventilating fans and all duct work between same and ceiling rough-in openings, and from same to discharge opening in building will be furnished and installed by Division 22.

1.02 DEFINITIONS

A. All references to the terms "Contractor", "Kitchen Equipment Contractor", or "K.E.C." in the specifications and/or on the drawings shall be defined to mean the Kitchen Equipment Contractor.

B. All references to the term "Owner" in the specifications and/or on the drawings shall be defined to mean the Owner or Owner's designated representative and the Foodservice Equipment Consultant.

C. All references to the term "Consultant" or "Foodservice Equipment Consultant" in the specifications and/or on the drawings shall be defined to mean **NYIKOS ASSOCIATES, INC.** its employees, and authorized representatives and is referred to throughout the contract documents as if singular in number and masculine in gender.

D. The phrase "The K.E.C. shall" or "by the K.E.C.", as applicable, is understood to be included as a part of each sentence, paragraph or article of these specifications unless otherwise indicated or specified.

1.03 QUALITY ASSURANCE

A. Qualification of Suppliers:
   1. Commercial foodservice equipment suppliers shall submit satisfactory evidence of compliance with the following qualifications and conditions to be approved.
      a. Successful completion of jobs of comparable scope.
      b. Have manufacturer's authorization to distribute and install specified factory items of equipment.
      c. Maintain a permanent staff experienced in the installation of foodservice equipment and preparation

of professional style rough-in drawings and brochures.

d. Maintain or have access to fabrication shop meeting N.S.F. requirements. If other than foodservice equipment suppliers own fabrication shop, obtain Consultant approval of fabrication shop desired to be used.

e. Maintain or have access to a readily available stock of repair and replacement parts, together with authorized service personnel.

B. Qualification of Fabricators:

1. Fabricators shall be an N.S.F. approved organization with trained personnel and facilities to properly design, detail and fabricate equipment in accordance with the specifications and standard details contained herein.
2. Custom fabricated equipment shall bear the National Sanitation Foundation seal of approval and listed as such under N.S.F. Standards No. 2 and No. 33.
3. Only one (1) fabricator shall be used for this project, and all equipment will be fabricated at the same shop. Where units cannot be fully shop-fabricated, complete fabrication at project site.
4. Acceptable fabricators are:
   a. Pro Stainless, Inc.; Keyser, WV
   b. Commercial Stainless, Inc.; Bloomsburg, PA
   c. Keystone Custom Fabricators, Inc.; Elizabeth, PA
   d. Eagle Spec Fab; Symrna, DE
   e. Select Stainless Inc.; Matthews, NC
   f. Other fabricators, as approved by Consultant.

C. Qualification of Manufacturers:

1. Manufacturers shall be regularly engaged in the production of items furnished and shall have demonstrated the capability to furnish similar equipment that performs the functions specified or indicated herein.

D. Standard Products:

1. Materials, products, and equipment furnished under this contract shall be the standard items of manufacturers regularly engaged in the production of such materials, products, and equipment and shall be of the manufacturer's latest design that complies with the specifications which have been produced and used successfully on other projects and in similar applications.
2. Discrepancies within contract documents should immediately be brought to the attention of the Consultant in writing for clarification prior to fabrication or ordering of standard items.

1.04 PLANS & SPECIFICATIONS

A. Specifications and drawings have been prepared to form the basis for procurement, erection, start-up and adjustment of all equipment in this contract. Plans and specifications shall be considered as mutually explanatory and work required by one, but not the other, shall be performed as though required by both. Items required by one, but not by the other shall be provided as though required by both. Work shall be accomplished as called for in specifications and shown on drawings, so that all items of equipment shall be completely functional for purpose for which they were designed. When there is any discrepancy between drawings and specifications, drawings shall govern. Bidders should seek clarification of any discrepancies from the Consultant prior to bidding.

1.05 SUBMITTALS

A. General Requirements:

1. Within six (6) weeks or earlier, as required, assemble and submit all shop drawings, rough-in drawings, brochures, color samples, etc. as a complete package. There will be no review of partial submittals.
2. Any and all costs, to all trades and parties involved, arising from delay of project due to non-submittal of the complete package by the K.E.C. within a reasonable time period shall be borne solely by the K.E.C.
3. Identify each submittal by project name, date, contractor, submittal name, and any other necessary information to distinguish it from other submittals.

B. Shop Drawings:

1. Submit one (1) set of paper sepia and one (1) set of bond prints on sheets equal in size to Contract Documents of equipment specified for custom fabrication including all accessories attached to each item.

2. Drawings shall be detailed and fully dimensioned to a minimum scale of 3/4"=1'-0" for plan and elevation views, and 1-1/2"=1'-0" for sections, based on the floor plan(s) and following item specifications. Drawings will be checked for thoroughness, accuracy, completeness, neatness, and returned for corrections, if necessary.

C. Rough-in Drawings:
1. Submit one (1) set of paper sepia and one (1) set of bond prints on sheets equal in size to Contract Documents of detailed arrangement plans professionally prepared from architects dimensioned plans (not traced from Contract Documents) at a minimum scale of 1/4"=1'-0".
2. Equipment Layout Plan showing arrangement of all items specified and identified on schedule of equipment listing item number, description, quantity, manufacturer, model number, and remarks.
3. Ventilation Plan showing dimensioned locations of all duct openings for ventilators and dishmachines identifying size, c.f.m. required (exhaust and supply), static pressures, and connection heights.
4. Plumbing/Electrical Plans showing dimensioned locations, sizes, elevations and capacities of all utility services required for each item of equipment in relation to finished walls, columns, and heights above finished floor.
5. Special Conditions Plan showing exact dimensions and details of all masonry bases, floor depressions, critical partition locations/heights, wall openings, reinforcing for wall and/or ceiling mounted equipment, and conduit locations for soda and compressed gas lines.

D. Equipment Brochures:
1. Submit two (2) hard bound copies of manufacturer's illustrations and technical data for approval prior to procurement. All items of Standard Manufacture shall be submitted, including items purchased to be built into fabricated equipment. Each illustration shall be marked to accurately describe the item to be furnished as specified. Include all deviations from standard information (i.e., voltage, phase, load, etc.).
2. Include a separate information sheet ahead of each illustration sheet showing all service connection sizes, electrical requirements, loads, consumptions, and all accessories specified.
3. Manufacturer's suggested schematic drawings for connection of mechanical and electrical services for such items as booster heaters, disposers, or any other item of equipment that may require the same.

E. Miscellaneous Shop Drawings:
1. Submit one (1) set of paper sepia and one (1) set of bond prints of manufactured equipment specified requiring clarification and approval such as, walk-in cooler/freezer drawings, ventilator drawings, utility raceway drawings, and refrigeration system drawings.

F. Operation and Maintenance Manuals:
1. Submit four (4) sets bound in hard covered book form for all mechanically operated equipment of standard manufacture. Include operating and cleaning/maintenance instructions, parts listing, recommended parts inventory listing and purchase source, copy of warranties, and similar applicable information.
2. Brochure covers shall bear the job name, date, and name of contractor.

G. Manufacturer's List:
1. The K.E.C. shall submit in writing a list of all manufacturer's representatives of the food service equipment such as convection ovens, ranges, etc., and their authorized service agencies' addresses and telephone numbers; to be presented after submission of manufacture data.

H. Samples:
1. Samples of materials, products, and fabrication methods, shall be submitted for approval upon request at no additional cost, before proceeding with work.

I. Re-submission Requirements:
1. Shop Drawings:
   a. Revise initial drawings as required and resubmit in accordance with submittal procedures.
   b. Indicate on drawings all changes which have been made in addition to those requested by Consultant.
2. Product Data and Samples:
   a. Submit new data and samples as required for initial submittal.
   b. Make all re-submittals within fourteen (14) working days from date of Consultants previous action.

J. Approvals:

1. After approval of the submittals listed above, furnish as many prints and copies as are required for the various trades, the Owner, the Architect, and the Consultant.
2. The approval of the shop drawings will be general and shall not relieve the K.E.C. of responsibility for proper fitting, finishing, quantities, and erection of work in strict accordance with the contract requirements, nor does it relieve him of the responsibility of furnishing material and workmanship not indicated on approved shop drawings but required for the completion of his work.
3. Approval by the Consultant and/or Owner of the manufacturer's data submitted by the K.E.C. does not waive the responsibility of K.E.C. to furnish each item of equipment in complete compliance with the specifications and drawings. Discrepancies between Contract Documents and furnished equipment shall be corrected even after approval and installation of this equipment at no additional cost to the Owner.

1.06 PRODUCT DELIVERY, STORAGE AND HANDLING

A. Delivery:
1. Equipment shall be delivered to the job site only after the building is weather-safe and vandal-safe.

B. Storage:
1. Store equipment in an area convenient to the point of installation in such a way that it can be protected from the weather and job hazards.

C. Protection:
1. Wrapping and protective coatings shall remain on all items until ready for use and in the case of stainless steel items, until installation is complete and the job is ready for cleaning.
2. Existing equipment not scheduled for removal but to remain within the construction area shall be wrapped with protective plastic and/or padding to prevent damage and shall remain on all items until installation is complete and the job is ready for cleaning.

D. Damage:
1. All responsibility shall rest with the K.E.C. for any damage or loss incurred prior to final acceptance. Such items as may be lost or damaged shall immediately be replaced or repaired to a new condition to the complete satisfaction of and at no additional cost to the Owner.

1.07 JURISDICTION TRADE AGREEMENTS AND RESTRICTIONS

A. Include the work specified, shown or reasonably infer able as part of foodservice equipment. Portions of this work may be subcontracted to those qualified to do such work, as may be necessary because of jurisdictional trade agreements and restrictions.

1.08 REGULATIONS AND CODES

A. Except as otherwise indicated, each item of equipment shall comply with the latest current edition of the following standards as applicable to the manufacture, fabrication, and installation of the work in this section.
1. N.S.F. Standards: Comply with National Sanitation Foundation Standards and criteria, and provide N.S.F. "Seal of Approval" on each manufactured item and major items of custom-fabricated work.
2. U.L. Standards: For electrical components and assemblies, provide either U.L. labeled products or, where no labeling service is available, provide a complete index of the components used as selected from the U.L. "Recognized Component Index".
3. A.N.S.I. Standards: For gas-burning equipment, comply with A.N.S.I. Z21-Series standards. Comply with A.N.S.I. B57.1 for compressed gas cylinder connections and with applicable standards of the Compressed Gas Association for water connection air gaps and vacuum breakers.
4. A.G.A.: All gas-fired equipment shall be A.G.A. Approved, equipped to operate on the type gas available at the job site and shall contain 100% automatic safety shut-off devices.
5. N.F.P.A. Standards: Comply with N.F.P.A. Bulletin 96 for exhaust systems and with N.F.P.A. Bulletins 17, 17A & 96 and U.L. 300 for fire extinguishing systems.
6. A.S.M.E. Code: Comply with A.S.M.E. boiler code requirements for steam generating and steam heated equipment. Provide A.S.M.E. inspection, stamps, and certification of registration with National Board.
7. National Electric Code: Comply with N.E.C. Volume 5 for electrical wiring and devices included with foodservice equipment.
8. All authorities having jurisdiction over this type of equipment and/or installation.

9. Where specifications and/or drawings require mechanical, electrical or refrigeration work to be performed, such work shall be done in strict conformance to other portions of the Base Building Specification which sets forth standards for this type of work.
10. Where there exists two standards or codes for one type of work, the stricter method shall govern.

1.09 WARRANTIES

A. Warrantee in writing all equipment and fabrication against defects and workmanship for a period of two (2) years from date of acceptance.
   1. Each piece of mechanical equipment shall be listed, together with the authorized service and repair agency whom the Owner will call should malfunctions occur within the one-year (1) guarantee period.

B. Refrigeration system compressors shall be warranted for five (5) years by the manufacturer. Free refrigeration service, including parts and labor, shall be furnished for two (2) years from date of acceptance.

1.10 JOB CONDITIONS

A. Visit the job site to field check actual wall dimensions and roughing-in and shall be responsible for fabricating and installing the equipment in accordance with the available space and utility services as they exist on the job site.

B. Check all door openings, passageways, elevators, etc., to be sure that the equipment can be conveyed to its proper location within the building and if necessary, check the possibility of holding wall erection, placement of doorjambs, windows, etc. for the purpose of moving the equipment to its proper location with the Contractor. Any removal and rebuilding of walls, partitions, doorjambs, etc. necessary to place the equipment, or if caused by incorrect information on the Contractor's drawings, shall be done at the expense of the K.E.C., at no additional cost to the Owner.

C. Notify the Consultant and Owner before fabrication of equipment of any discrepancies between plans and specifications and actual conditions on the job.

D. Before finished floors, walls, and/or ceilings are in place, physically check the location of all "rough-ins" at the job site. Report discrepancies in writing.

E. Any changes required after fabrication has been started to ensure equipment accurately fitting the space as it exists and conforming to actual field dimensions on the job shall be made at no additional cost to the Owner.

F. If special hoisting equipment and operators are required, include such cost as part of the bid for this work.

1.11 CHANGES IN THE WORK

A. The Owner reserves the right to require reasonable modification to be made in the routing of work and relocation of equipment. This specifically refers to conditions where interference occurs or where more desirable accessibility can be obtained or whose materials cannot be installed because of structural or mechanical conditions encountered. Such changes shall be made at no additional cost to the Owner.

1.12 PATENTS

A. Hold harmless and save the Owner and its officers, consultants, servants and employees from liability of any nature or kind, including costs and expenses for or on account of any copyrighted, patented, or un-patented invention, process, trademark, design, device, material, article, or appliance manufactured or used in the performance of the contract, including its use by the Owner, unless otherwise specifically stipulated in the Contract Documents.

B. If the Contractor has information that the process or article specified is an infringement of a patent, he shall be responsible for such loss unless he promptly gives such information to the Owner in writing. The contract price shall include all royalties or costs arising from the use of any or all of the above which are, in any way, involved in the contract.

1.13 CONTRACTOR'S WARRANTY

A. The Contractor represents and warrants:
   1. That he is financially solvent and that he is experienced in and competent to perform the types of work or to furnish the plans, materials, supplies or equipment, to be so performed or furnished by him.
   2. That he is familiar with all Federal, State, municipal, and department laws, ordinances, orders, and regulations, which may, in any way, affect the work of those employed therein, including, but not limited to, any special acts relating to the work or to the project of which it is a part.
   3. That such temporary and permanent work required by the contract as is to be done by him can be satisfactorily constructed and used for the purpose for which it is intended and that such construction will not injure any person or damage any property.
   4. That he has carefully examined the plans, specifications, addenda, if any, and the site of the work and that, from his own investigations, he has satisfied himself as to the nature and location of the work, the character, quality, and quantity of materials likely to be encountered, the character of equipment and other facilities needed for the performance of the work, the general and local conditions, and all other materials which may, in any way, affect the work or its performance.
   5. That he has satisfied himself as to the existing openings and accesses to the foodservice area through which his equipment shall be required to pass and that he is responsible for his equipment being delivered in as many sections as necessary to conform to the available space dictated by these existing limitations.

1.14 SUBSTITUTIONS

A. Bids submitted shall be for the specific manufacturer and model, size, capacity, and accessories, as specified or shown on the drawings.

B. The K.E.C. may quote upon brands and models of equipment other than those specified as a substitute. In the event that it is desired to request approval of substitute material, product, article, process, or item of equipment in lieu of that which is specified, submit a written request at least (10) working days prior to date of bids, setting forth the proposed substitution in detail, including an itemized analysis of the addition or deduction in the amount of the contract, if any, which will result if the substitution is approved. Each such request shall include a complete description of the proposed substitute, the name of the material or equipment for which it is to be substituted, drawings, cuts, performance and test data and any other data or information necessary for a complete evaluation. If approved, bidders will be notified in the form of addendum.

C. The Contractor shall be held responsible for additional costs to himself or any other prime contractor for changes required to install materials, devices, equipment, etc., which the Contractor has substituted for that specified.

D. The Owner reserves the right to award a contract or contracts based upon the inclusion or exclusion of one or more of the alternate estimates. The description of all workmanship and materials under the various headings of the specifications shall have the same meaning and force when applied to similar workmanship and materials in the alternate. If the descriptions are not specific, the workmanship shall be the best quality and the materials the best commercial grade.

E. Whenever any product is specified in the Contract Documents by reference to the name, trade name, make, or catalog number of any manufacturer or supplier, the intent is not to limit competition but to establish a standard of quality which is necessary for the project. Products of other manufacturers meeting the established criteria will be considered. However, please take note that the plumbing, electrical, steam, heating, ventilating, and air-conditioning drawings prepared by the consulting engineers, have been engineered based on the first product named under each item number designation. Therefore, any other product which is submitted for approval in lieu of the primary item specified, shall conform to the rough-in requirements established for the first product named, as well as physical size and building construction requirements.

F. Any equipment listed which is not in accordance with the provisions of these specifications will be rejected. If the Contractor fails to submit for approval within the specified time the list of equipment as required herein, the Consultant shall then have the right to make the final equipment selection. The selection made by the Consultant shall strictly conform to these specifications and will be final and binding, and the items shall be furnished and installed by the Contractor without change in the contract price at the time of completion.

G. It shall be the responsibility of the K.E.C. to prove that substitutions are equal to specified items. **NYIKOS ASSOCIATES, INC.** as the Owner's representative, shall be the determining authority as to the acceptability or equality of the substitutions. <u>No substitutions shall be approved after bids are received.</u>

1.15 DESIGN/MODEL CHANGE, DISCONTINUED ITEMS

A. All equipment specified shall be of latest design. Any improvements made in design and construction of prefabricated items before equipment is actually delivered to the project site, shall be incorporated in equipment, at no additional cost, provided such incorporation does not delay delivery date of equipment.

B. In the event of an item being discontinued after specified and prior to delivery to project site, the K.E.C. shall be responsible for notifying the Consultant in writing of the discontinued item and request an alternate of equal performance, including all accessories, at no additional cost to the Owner.

PART 2 - PRODUCTS

2.01 GENERAL

A. The equipment and its component parts shall be new and unused. All items of standard manufactured equipment shall be current models at the time of delivery. All parts subject to wear, breakage, or distortion shall be accessible for adjustment, replacement, and repair.

B. Means shall be provided to ensure adequate lubrication for all moving parts. All oil holes, grease fittings, and filler caps shall be accessible without the use of tools.

C. The design of the equipment shall be such as to provide for safe and convenient operation. Covers or other safety devices shall be provided for all items of equipment presenting safety hazards. Such guards or safety devices shall not present substantial interference to the operation of the equipment. All guards shall provide easy access to the guarded parts.

D. Trim shall not be an acceptable substitute for accuracy and neatness. When trim is required and accepted by the Consultant and the Owner in lieu of rejection of items of equipment, it shall be the K.E.C.'s responsibility to provide same at no additional cost.

E. Unless otherwise specified herein, no material lighter than #20 gauge shall be incorporated into the work. All gauges for sheet iron and sheet steel shall be U.S. Standard Gauges, and finished equipment gauge thickness shall not vary more than 5% plus or minus from the thickness indicated below.

GAUGE	THICKNESS	GAUGE	THICKNESS
#10	0.1406	#16	0.0625
#12	0.1094	#18	0.0500
#14	0.0781	#20	0.0375

F. Materials or work described in words which have a well-known and acceptable trade meaning shall be held to refer to such accepted meanings.

2.02 MATERIALS

A. Refrigeration Systems:
   1. Self-contained:
      a. Whether the units be top-mounted or cabinet-mounted, they shall be started by the K.E.C. and shall be tested for maintenance of temperature.
      b. All units shall be furnished with condensate evaporators.
   2. Remote: Provide and install complete refrigeration system(s), charged, started, and operating properly, according to the Item Specifications and the following.
      a. Single stage compressors with air-cooled condensers operating within the recommended range of suction discharge pressure of economical operation and within the required capacity.
      b. All units shall be new and factory assembled, to operate with the refrigerant specified. Refrigerant R-404A shall be used for all medium and low temperature applications. Due to the unsettled nature of refrigerants, no refrigerant shall be used with a phase-out date of less than ten (10) years from the date of installation.
      c. Compressors shall be accessible hermetic type, Copeland or approved equal, and shall be equipped with high-low pressure control, liquid line drier, sight glass, suction and discharge vibration eliminator, and head pressure control.
      d. The system shall have a factory mounted and pre-wired control panel complete with main fused

disconnect, compressor circuit breakers, contactors, and time clocks wired for single point power connection.

e. The supporting frame shall be constructed of structural steel, fully welded, and protected against rust and corrosion with one (1) coat primer, and two (2) coats paint, unless otherwise specified.

f. Systems specified for outdoor installation shall be fully protected in a weather-proofed housing with louvered front panel and hinged top, constructed to resist rust and corrosion, and furnished with low ambient controls. Crankcase heater shall be provided with every compressor.

3. Where specifications call for pre-piped lines (i.e., from a fixture to a valve compartment, etc.), provide such work in strict conformance with other sections of the specifications which set forth standards for this type of work or in conformity with the requirements of the Board of Fire Underwriters or ASHRAE Standards, whichever is greater.

4. Each refrigeration item specification is written to provide minimum specifications and scope of work. All refrigeration equipment shall be designed and installed to maintain the following general temperatures unless otherwise specified.

TYPE		REFRIGERATORS	FREEZERS
a.	Walk-In	+35º F./1.7º C.	-10º F./-23.3º C.
b.	Reach-In	+35º F./1.7º C.	-10º F./-23.3º C.
c.	Undercounter	+35º F./1.7º C.	-10º F./-23.3º C.
d.	Fabricated	+35º F./1.7º C.	-10º F./-23.3º C.
e.	Cold Pans	+0º F./-17.8º C.	
f.	Work Rooms	+50º F./10º C.	

5. Provide (including payment if subcontracted) all electrical and refrigeration components needed by the completed system and complete (or have completed by the respective trades) all connections of and to said components.

6. An evaporator coil defrost system shall be provided and installed by the K.E.C. on all refrigeration systems designed to operate at an evaporator coil temperature of less than +35º F. Evaporator coil units provided without electric defrost feature shall be installed with a solenoid valve in the liquid line, controlled by the time clock so as to shut off the flow of refrigerant and allow the compressor to pump down and shut off by activation of the pressure control switch.

7. Verify the requirements of and provide any or all additional refrigeration specialty(s) or component(s) required or recommended by the manufacturer for proper operation under the specific operating conditions and location of each system specified.

8. Verify and provide manufacturer's certification that the equipment selection hereinafter specified for each refrigeration system is properly sized and shall meet the operating requirements set forth for each system regarding maintaining specified operating temperature, hours of compressor running time, and system pressures and velocities as recommended by the equipment manufacturer(s).

9. All refrigeration systems shall be installed and wired in strict conformance with the manufacturer's instructions and recommendations.

B. Motors and Heating Elements:

1. Motors up to and including 1/2 HP shall be wired for 120 volt, single phase service. Motors larger than 1/2 HP shall be wired for 208 volt, single or three phase service as indicated. Motors shall be of the drip-proof, splash-proof, or totally enclosed type, having a continuous duty cycle and ball bearings, except small timing motors which may have sleeve bearings. All motors shall have windings impregnated to resist moisture. Motors located where subject to deposits of dust, lint, or other similar matter shall be of the totally enclosed type. Motors shall have ample power to operate the machines for which designated under full load operating conditions without exceeding their nameplate ratings. Insulation shall be N.E.M.A. Class B or better.

2. Heating elements having a connected load up to and including 1,000 watts shall be wired for 120 or 208 volt, single phase service, or as indicated on the drawings.

a. Any heating element larger than 1,000 watts or any combination of elements in one fixture totaling more than 1,000 watts shall be wired for 208 volt single or three phase service, as indicated on the drawings.

b. Fixtures having multiple heating elements may be wired for three phase service with the load balanced as equally as possible within the fixture.

C. Switches and Controls:

1. Provide recognized commercial grade signals, "on-off" pushbuttons or switches, and other speed and temperature controls as required for operation of each item, complete with pilot lights and permanent graphics, conspicuously labeled, to assist the user of each item.
2. Mount switches and controls directly adjacent the piece of equipment for which it involves, on operator's side of counter body apron, out of view to the public.
3. Provide on or for each motor-driven appliance or electrical heating or control unit, a suitable control switch or starter of the proper type and rating and in accordance with Underwriter's Code wherever such equipment is not built in. All other line switches, safety cut-outs, control panels, fuse boxes, other control fittings and connections, when not an integral part of the unit or furnished loose by the manufacturer will be furnished and installed by the Electrical Contractor, unless otherwise specified. All electrical controls, switches, or devices provided loose for field installation as a part of the item specified shall be installed in the field by the Contractor unless otherwise specified.
4. Appliances shall be furnished complete with motors, driving mechanisms, starters, and controllers, including master switches, timers, cut-outs, reversing mechanisms, and other electrical equipment if and as applicable.

D. Cover Plates:
1. All controls mounted on vertical surfaces of fixtures shall be set into recessed die stamped stainless steel cups, or mounted onto removable cover plates in such a fashion as to not protrude or interfere with the operation of each item.
2. Cover plates shall be furnished and installed for all electrical outlets, receptacles, switches and controls furnished by the K.E.C., and shall match the material and finish of the equipment to which they will be fastened.

E. Wiring and Conduit:
1. Wiring shall be properly protected in N.E.M.A. and U.L. approved metal enclosures. Only rigid steel conduit shall be used, zinc coated where unexposed and chrome plated where exposed. All wiring shall be run concealed wherever possible.
2. All equipment furnished under this contract shall be so wired, wound, or constructed so as to conform with the electrical characteristics at the job site.
3. Wiring and connection diagrams shall be furnished with electrically operated machines and for all electrically wired fabricated equipment.
4. Furnish all foodservice equipment completely wired internally using wire and conduit suitable for a wet location. Where an Electrician's services are required, the work shall be done in the K.E.C.'s factory or at his expense at the job site at no additional cost to the Owner. Provide all electrical outlets and receptacles required to be mounted on or in fabricated equipment and interconnect to a master circuit breaker panel with all wires neatly tagged showing item number, voltage characteristics, and load information. Final connection shall be made by the Electrical Contractor.

F. Cords, Plugs, and Receptacles:
1. The Electrical Contractor shall provide three- or four-wire, grounding-type receptacles for all wall and floor mounted outlets to be used for plug-in equipment with characteristics as noted on the drawings. Provide Hubbell three-wire or four-wire grounding-type connectors and neoprene cords installed on each item of plug-in equipment, as indicated on drawings and item specifications.
2. K.E.C. shall coordinate with the Electrical Contractor so that the receptacles provided will match the specific plugs provided as part of the plug-in equipment. Any changes in cords and plugs required in the field due to lack of coordination between the Electrical Contractor and the K.E.C. shall be the latter's responsibility.
3. Reduce the length of all cords furnished with the specified equipment to a suitable or appropriate length so they do not interfere with other equipment or operations.
4. Pedestal receptacles that are part of fabricated equipment exposed to view, shall be similar to T&S Model #B-1508DD single face, single gang or Model #B-1528DD single face, double gang.

G. Water Inlets:
1. Water inlets shall be located above the positive water level wherever possible to prevent siphoning of liquids into the water supply system. Wherever conditions shall require a submerged inlet, a suitable type of check valve (except in jurisdictions where check valves are prohibited) and vacuum breaker shall be placed on the fixture to form a part of same to prevent siphoning. Where exposed to view, piping and fittings shall be chrome-plated.

H. Drain Lines:
1. Plumbing Contractor shall provide and install indirect waste lines from equipment which will discharge into floor drains or safe wastes in accordance with Plumbing Rough-In Plans, chrome-plated where exposed. Extend to a point at least 1" (or as required by local codes) above the rim of the floor drain, cut bottom on 45º angle and secure in position.
2. All horizontal piping lines shall be run at the highest possible elevation and not less than 6" above finished floor, through equipment where possible.
3. No exposed piping in or around fixtures or in other conspicuous places shall show tool marks of more than one thread at the fitting.
4. All steam operating valves on or in fabricated and purchased foodservice equipment shall be provided with composition hand wheels, which shall remain reasonably cool in service.
5. Provide suitable pressure regulating valves for all equipment with such components that might reasonably be expected to be affected over a period of time by adverse pressure conditions.

I. Faucets, Valves and Fittings:
1. All sinks shall be fitted with chromium plated, swing spout faucets of same manufacturer throughout as follows, or otherwise specified in Item Specifications.
   a. Prep and Utility Sinks:
      1.) Splash-Mounted:
         a.) T&S Brass and Bronze Works, Inc., Model #B-231.
         b.) Fisher Manufacturing Company, Model #3253.
      2.) Deck-Mounted:
         a.) T&S Brass and Bronze Works, Inc., Model #B-221.
         b.) Fisher Manufacturing Company, Model #3313.
   b. Pot Sinks:
      1.) Splash-Mounted:
         a.) T&S Brass and Bronze Works, Inc., Model #B-290.
         b.) Fisher Manufacturing Company, Model #5214.
2. Pre-Rinse Assemblies:
   a. Splash-Mounted:
      1.) T&S Brass and Bronze Works, Inc., Model #B-133 with #B-109 wall bracket.
      2.) Fisher Manufacturing Company, Model #2210 with #2902-12 wall bracket.
   b. Deck-Mounted:
      1.) T&S Brass and Bronze Works, Inc., Model #B-143 with #B-510 mixing valve and #B-109 wall bracket.
      2.) Fisher Manufacturing Company, Model #2810 with #2805-CV mixing valve and #2902-12 wall bracket.
3. Vacuum Breakers:
   a. General Use:
      1.) Fisher Manufacturing Company, Model #3990-8000.
   b. Disposers:
      1.) Splash-Mounted:
         a.) T&S Brass and Bronze Works, Inc., Model #B-455.
         b.) Fisher Manufacturing Company, Model #3990.
      2.) Deck-Mounted:
         a.) T&S Brass and Bronze Works, Inc., Model #B-456.
         b.) Fisher Manufacturing Company, Model #3991.
4. Trough Inlets:
   a. Fisher Manufacturing Company, Model No. #2905.
5. Other specialty faucets, pre-rinse assemblies, vacuum breakers, and trough inlets, as specified under Item Specifications.
6. All sink compartments shall be fitted with 2" NPT male, chrome-plated, brass rotary waste valves complete with overflow assemblies and stainless steel strainers.
   a. Prep and General Utility Sinks:
      1.) Fisher Manufacturing Company, Model #6100.
   b. Pot Sinks:
      1.) Fisher Manufacturing Company, Model #6102.
7. Refer to Division 22 for all other fittings.

J. Metals and Alloys:
1. Stainless steel sheets shall conform to ASTM 240, Type 302, Condition A, 18-8, of U.S. Standard Gauges as previously indicated under paragraph 2.1.E.
   a. All exposed surfaces shall have a No. 4 finish. A No. 2B finish shall be acceptable on surfaces of equipment not exposed to view.
   b. All sheets shall be uniform throughout in color, finish, and appearance.
   c. Rolled shapes shall be of cold rolled type conforming to ASTM A36.
2. Stainless steel tubing and pipe shall be Type 304, 18-8, having a No. 4 finish, and shall conform to either ASTM A213 if seamless or ASTM A249 if welded.
3. Where galvanized metal is specified, it shall be copper-bearing galvanized iron, cold-rolled, stretcher leveled, bonderized, re-rolled to insure a smooth surface, and used in the largest possible sizes with as few joints as necessary.
4. Galvanizing shall be applied to rolled shapes in conformance with ASTM A123, and to sheets in conformance with ASTM A526, coating designation G-90.

K. Castings:
1. Castings shall consist of corrosion resisting metal (white metal) containing not less than 30% nickel. All castings shall be rough ground, polished, and buffed to bright lustre and free from pit marks, runs, checks, burrs, and other imperfections. In lieu of corrosion resisting metal castings, die-stamped or cast 18-8 stainless steel will be acceptable.

L. Hardware and Casters:
1. All hardware shall be of heavy duty type, satin finished chromium plated brass, cast or forged or highlighted stainless steel of uniform design. All hardware shall be a well-known brand, and shall be identified by the manufacturer's name and model number for easy replacement of broken or worn parts.
2. Casters on custom-built equipment shall be heavy duty type, ball bearing, solid or disc wheel, with grease-proof rubber, neoprene, or polyurethane tire. Wheel shall be 5" diameter, minimum width of tread 1-3/16", minimum capacity per caster 250 pounds, unless otherwise noted.
   a. Solid material wheels are to be provided with stainless steel rotating wheel guard.
   b. All casters shall have sealed wheel and swivel bearings, polished plated finish and be N.S.F. approved.
   c. All equipment specified with casters shall have a minimum of two (2) with brakes installed on opposite corners, unless otherwise noted.

M. Locks:
1. When specified, doors and drawers of all custom fabricated or manufactured equipment shall be provided with cylinder locks, disc tumbler type with stainless steel faceplate as manufactured by Standard-Keil Mfg. Co., or approved equal.
   a. Provide two (2) sets of keys for each lock.
   b. All locks shall be keyed alike, except at cashiers stations or unless otherwise specified.

N. Thermometers:
1. All fabricated refrigerated compartments shall be fitted with exterior mounted, adjustable, dial or digital thermometers with flush bezels, and shall be calibrated after installation.

O. Sealants:
1. Sealant, wherever required, shall conform to ASTM C 920; Type S Grade NS, Class 25, Use Nt, with characteristics that when fully cured and washed meets requirements of Food and Drug Administration Regulation 21 CFR 177.2600 and N.S.F. RTV-732 for use in areas where it comes in contact with food.
2. Dow-Corning #780 or General Electric "Silastic", or approved equal, in either clear or approved color to match surrounding surfaces and applied in accordance with sealant manufacturers recommendations for a smooth, sealed finish.

P. Millwork:
1. All millwork materials shall be free from defects impairing strength, durability, or appearance; straight and free from warpage; and of the best grade for their particular function. All wood shall be well-seasoned, kiln dried, and shall have an average moisture content of 8%, a max. of 10% and a min. of 5%.
2. Plywood and other woodwork of treatable species, where so required by code, shall be fire-retardant treated to result in a flame spread rating of 25 or less with no evidence of significant progressive combustion when

tested for 30 minutes duration under ASTM E84 and shall bear the testing laboratory mark on the surface to be concealed.

3. Concealed softwood or hardwood lumber shall be of poplar, douglas fir, basswood, red oak, birch, maple, beech or other stable wood and shall be select or better grade, unselected for color and grain, surfaced four sides, square-edged, and straight. Basswood may be used where fire-retardant materials are required.
4. Plywood for transparent finish shall conform to U.S. Product Standard PS-51-71, Type I (fully waterproofed bond), with architectural grade face veneers of species as specified, free of all pin knots, patches, color streaks and spots, sapwood, and other defects. Plywood designated to have plywood cores shall be of either 5 or 7 ply construction. Plywood so designated on the drawings and plywood not otherwise shown shall have a particleboard core, cross banding of veneers, and face and back veneers. Particleboard cores shall have a 45-pound density, except where the fire retardant treatment requires cores of lesser density.
5. Face veneers shall be matched for color and grain to produce balance and continuity of character. Mineral streaks and other discolorations, worm-holes, ruptured grain, loose texture, doze, or shake will not be permitted. Face veneer leaves on each surface shall be full-length, book-matched, center-matched, and sequence-matched. Surfaces shall be sequence and blueprint matched. Veneers not otherwise indicated shall be plain sliced. Backing veneers for concealed surfaces shall be of a species and thickness to balance the pull of the face veneers.
6. Hardwood plywood for painted surfaces shall conform to U.S. Product Standard PS-51-71, Type I, and shall have sound birch, maple or other approved close grain hardwood faces suitable for a paint finish.
7. Perforated hardboard shall be a tempered hardboard, 1/4" thick, conforming to Federal Specification LLL-B-810B, Type I, SIS, Finish B (primed), Design B (perforated), with 1/4" diameter holes spaced on 1" centers both ways.
8. Plywood for laminate assemblies shown or specified with plywood core shall be of the 5 or 7 ply construction with sanded close-grain hardwood face and back veneers, laminated with waterproof glue, in thickness shown, conforming to U.S. Product Standard PS-51-71.
9. Particle board for plastic laminate assemblies shown or specified with particle board wood core shall conform to U.S. Product Standard CS-236-66, Type 1, or 2, Grade B (45 pound density), class 2: except where fire-retardant treatment is required the density shall conform to the treatment requirements.

Q. Plastic Laminate:
1. Plastic laminate surfaces shall be laminated with thermosetting decorative sheets of the color, pattern, and style as selected by the Architect.
   a. Horizontal surfaces shall be laminated with sheets conforming to Federal Specification L-P-508F, Style D, Type I (general purpose), Grade HP, Class 1, 1/16" thick, satin finish, with rough sanded backs.
   b. Vertical surfaces shall be laminated with sheets conforming to Federal Specification L-P-598F, Style D, Type II, (vertical Surface), Grade HP, Class 1, non-forming, satin finish, 1/32" thick or heavier.
   c. Curved surfaces shall be laminated from sheets conforming to Federal Specification L-P-508F, Style D, Type III (post-forming), Grade HP, Class 1, satin finish.
   d. Balance sheets for backs in concealed locations shall be either reject material of the same type and thickness as the general purpose grade facing or may be .020" thick laminate backing sheets conforming to Federal Specification L-P-00508E, Style ND, Type V (backing sheet), Grade HP.
2. Adhesives:
   a. For application of plastic laminate to wood substrates of horizontal surfaces shall be a phenolic, resorcinol, or melamine adhesive conforming to Federal Specification MMM-A-181C, producing a waterproof bond.
   b. For applying plastic laminate to vertical surfaces shall be either a waterproof type or a water-resistant type such as a modified urea-formaldehyde resin liquid glue conforming to Federal Specification MMM-A-188C.
   c. Contact adhesive will not be acceptable.

2.03 FABRICATION AND MANUFACTURE

A. Materials and Workmanship:
1. Unless otherwise specified or shown on drawings, all materials shall be new, of best quality, perfect, and without flaws. Material shall be delivered and maintained on the job in an undamaged condition.

2. Fabrication shall be equal to the standards of manufacture used by all first class equipment manufacturers, performed by qualified, efficient, and skilled mechanics of the trades involved.
3. All items of standard equipment shall be the latest model at time of delivery.
4. All fabricated work shall be the product of one manufacturer of uniform design and finish.
5. Each fabricated item of equipment shall include all necessary reinforcing, bracing, and welding with the proper number and spacing of uprights and cross members for strength.
6. Wherever standard sheet sizes will permit, the tops of all tables, shelves, exterior panels of cabinet type fixtures, and all doors and drainboards shall be constructed of a single sheet of metal.
7. Except where required to be removable, all flat surfaces shall be secured to vertical and horizontal bracing members by welding or other approved means to eliminate all buckle, warp, rattle, and wobble. All equipment not braced in a rigid manner and which is subject to rattle and wobble shall be unacceptable, and the K.E.C. shall add additional bracing in an approved manner to achieve acceptance.

B. Sanitary Construction:
1. All fabricated equipment shall be constructed in strict compliance with the standards of the National Sanitation Foundation as outlined in their Bulletin on Food Service Equipment entitled "Standard No. 2" dated October 1952, and in compliance with the local and State Public Health Regulations in which the installation will occur.
2. All fabricated equipment shall bear the N.S.F. "Seal of Approval".

C. Construction Methods:
1. Welding:
   a. All welding shall be the heliarc method with welding rod of the same composition as the sheets or parts welded. Welds shall be complete, strong, and ductile with excess metal ground off and joints finished smooth to match adjoining surfaces; free of mechanical imperfections such as gas holes, pits, cracks, etc., and shall be continuously welded so that the fixtures shall appear as one-piece construction. Butt welds made by spot solder and finished by grinding shall not be acceptable.
   b. Spot welds shall have a maximum spacing of 3". Tack welds shall be of at least 1/4" length, and spaced no greater than 4" from center to center. Weld spacing at the ends of the channel battens shall not exceed 2" centers.
   c. In no case shall soldering be considered as a replacement for welding, nor shall any soldering operation be done where dependence is placed on stability and strength of the joint.
   d. Fixtures shall be shop fabricated of one piece and shipped to the job completely assembled wherever possible. Equipment too large to transport or enter the building in one piece shall be constructed so that the field joints can be welded at the job site.
   e. All exposed joints shall be ground flush with adjoining material and finished to harmonize therewith. Whenever material has been sunk or depressed by welding operation, depression shall be suitably hammered and peened flush with the adjoining surface and ground to eliminate low spots. In all cases the grain of rough grinding shall be removed by successive fine polishing operations.
   f. All unexposed welded joints on undershelves of tables or counters of stainless steel shall be suitably coated at the factory with an approved metallic-based paint.
   g. After galvanized steel members have been welded, all welds and areas where galvanizing has been damaged shall have a zinc dust coating applied in conformance with Military Specification Number MIL-P-26915.
2. Joints:
   a. Butt joints and contact joints wherever they occur, shall be close fitting and shall not require a filler. Wherever break bends occur, they shall be free of undue extrudence and shall not be flaky, scaly, or cracked in appearance; where such breaks do mar the uniform surface appearance of the material, all such marks shall be removed by suitable grinding, polishing, and finishing. Wherever sheared edges occur, they shall be free of burrs, fins, and irregular projections and shall be finished to obviate all danger of laceration when the hand is drawn over them. In no case shall overlapping materials be acceptable where miters or bullnosed edges occur.
   b. Field welded joints shall be ground smooth without dips and irregularities and finished to match original finish.
3. Bolt, Screw and Rivet Construction:
   a. All exposed surfaces shall be free from bolt and screw heads. When bolts are required, they shall be of the concealed type and be of similar composition as the metal to which they are applied.
   b. Where bolt or screw threads on the interior of fixtures are visible or may come into contact with hands

or wiping cloths, they shall be capped with a stainless steel or chrome acorn nut and stainless steel lock washer.

c. If rivets are used to fasten rear paneling to the body of the fixture, such rivets shall be stainless steel. In no case shall iron rivets be used.

4. Sound Deadening:
   a. Schnee Butyl-Sealant 1/2" wide rope continuously between all frame members and underside of stainless steel table tops, overshelves and undershelves.
   a. Tighten stud bolts for maximum compression of sealant.
5. Hi-Liting:
   a. All horizontal edges of stainless steel tops, splashes, tops of raised rolled rims, and edges of all exposed doors, handles and shelf edges shall be hi-lited, in uniform design by grinding with abrasive not coarser than #240 grit, then polishing with compound to a uniform mirror finish.
6. Polishing:
   a. The grain of polishing shall run in the same direction on all horizontal and on all vertical surfaces of each item of fabricated equipment except in the case where the finish of the horizontal sections of each shall terminate in a mitered edge.
   b. Where sinks and adjacent drainboards are equipped with backsplash, the grain of the polishing shall be consistent in direction throughout the length of the backsplash and sink compartment.
7. Finishes:
   a. Paint and coatings shall be of an N.S.F. approved type suitable for use in conjunction with foodservice equipment. Such paint or coating shall be durable, non-toxic, non-dusting, non-flaking and mildew resistant, shall comply with all governing regulations, and shall be applied in accordance with the manufacturers recommendations.
   b. All exterior, galvanized parts, exposed members of framework, and wrought steel pipe where specified to be painted shall be cleaned, primed with rust inhibiting primer, de-greased, and finished with two (2) coats of glossy enamel grey hammertone paint, unless otherwise noted.
   c. Where baked enamel finishes are specified, they shall be oven baked on the fixtures for a minimum of 1-1/2 hours at a minimum temperature of 300º F.
   d. Fabricated equipment shall be spray coated with plastic suitable for protecting the equipment during transport and installation. The coating shall be easily removable after the equipment installation is complete at the job site, and final clean-up has begun.

D. Construction:
1. Legs:
   a. All tubular stands for open base tables, sinks, or dishtables shall have legs constructed of 1-5/8" O.D. stainless steel tubing, with 1-1/4" O.D., #16 gauge stainless steel crossbracing running between legs at a point 10" above finished floor.
   b. All joints between legs and crossbracing shall be welded and ground smooth, full 360º.
   c. The top end of legs shall be closely fitted into fully-enclosed stainless steel conical gussets no less than 3" high, similar to Klein #481-58 or #483-58, or approved equal.
   d. Gussets shall be fully welded to framing reinforcing members, so that, set screw is not visible from front.
   e. Legs without crossrails will not be accepted.
   f. Legs shall be spaced at not more than 5'-6" on centers, unless otherwise specified.
2. Feet:
   a. All tubular legs will be swedged for appearance and close fit to United Show Case #BF-158, or approved equal, fully enclosed, stainless steel bullet-shaped foot.
      1.) The foot shall be threaded into a collar and completely welded inside the tubular leg to permit a maximum adjustment of 2" without any thread exposure.
      2.) Threads shall be National Course Series Class 2 fit or better, machined to prevent end play when foot is at maximum adjustment.
      3.) The bullet-shaped foot shall have slightly rounded bottom to protect the floor, and a minimum bearing surface of 3/4" diameter of stainless steel-to-floor contact.
      4.) Bottom of tubular leg shall be finished off smoothly to provide a sanitary fitting and prevent the accumulation of grease or other debris.
   b. Cabinet type fixtures shall be mounted on 8" high die-stamped, sanitary, two-piece stainless steel legs no less than 2-3/4" in diameter at the top, Component Hardware #A72-0811, or approved equal.
      1.) The bottom fully enclosed, stainless steel, bullet-shaped foot threads up into the inside of the

upper member, with a male threaded 5/8" bushing to permit maximum adjustment of 2" without thread exposure.

2.) The upper section shall be stamped in a neat design with a flared inverted shoulder and fully welded to a base plate designed for anchoring to the channel underbracing.

3. Table Tops:
   a. Tables shall be constructed of stainless steel, and of a thickness not less than #14 gauge with 1-3/4" by 120º rolled edges, or as otherwise specified and detailed.
   b. All corners shall be bull-nosed and of the same radius as rolled edges.
   c. Joints where required shall be butt-welded and ground smooth to present a uniform one-piece appearance.
   d. All tops shall be reinforced on the underside with a fully welded framework of 1-1/2"x1-1/2"x1/8" galvanized steel angles with the framing extending around the top perimeter and crossbraced on 24" maximum centers.
   e. 1"x4"x1" galvanized or stainless steel, fully welded, cross channel, closed end members placed at each pair of legs with one (1) channel running lengthwise will also be acceptable.
   f. All tops shall be reinforced so that there will be no noticeable deflection.
   g. Metal tops where adjacent to walls or other items of equipment, shall be constructed with integral, coved, back and/or endsplashes as required and specified in accordance with the standard details contained herein. Close all ends of splashes.
4. Enclosed Bases:
   a. All enclosed bases or cabinet bodies shall be of seamless #18 gauge stainless steel construction, enclosed on the ends and sides as required and called for under each item.
   b. Ends of body shall terminate at front or operator's side in a 2" wide mullion, vertical, and completely enclosed. All intermediate mullions shall be completely enclosed.
   c. The bases shall be reinforced at the top with a framework of 1-1/2"x1-1/2"x1/8" galvanized angles, with all corners mitered and welded solid.
   d. Underside of top shall be reinforced with channels and gussets where necessary. Additional angles and cross members shall be provided to reinforce shelves and support tops under heavy tabletop equipment.
   e. Where sinks or other drop-in equipment occur, provide additional reinforcing extending crosswise, both sides of opening.
   f. In the case of fixtures fitting against or between walls, the bodies shall be set in 1" or 2" from the wall line, with the tops continuing to the wall line with integral, coved splashes as specified. Extend vertical face of body to the wall line only. This will permit adjustment to wall irregularities. Vertical trim strips will not be accepted.
   g. Bodies shall be fitted with counter style stainless steel legs as hereinbefore specified.
5. Drawers:
   a. Drawers, where specified, shall have removable pan inserts of #18 gauge stainless steel, and shall be approximately 20"x20"x5" deep unless otherwise specified.
      1.) Perimeter top edge shall be flanged out 1/2".
      2.) All interior horizontal corners shall be rounded on a 1" radius, and all interior vertical corners shall be rounded on a 2" radius.
   b. Fronts shall be double pan #16 gauge stainless steel construction, 1" thick, insulated with a semi-rigid, fiberglass board, un-faced, having a three-pound density.
      1.) The top of the drawer face shall be formed as an integral pull by breaking the front pan back on a 45º angle 1", then straight up 1", back to front 1", and then down at the front 3/4".
      2.) Drawer front shall have all edges and corners ground smooth with a radius edge pull.
   c. The drawer shall have an all welded frame of 1"x1", #16 gauge stainless steel angles sized to fit the removable pan insert.
   d. Drawers shall operate on #12 gauge slides with roller bearings with hardened and ground raceways, Grant, Model #3320, or approved equal. Slides shall be pitched approximately 3/8" per foot to permit self-closing action.
   e. Drawers shall be adequately and neatly fitted to the guides to permit easy operation without rattle or binding.
   f. Slides and frame shall be reinforced to support a dead weight of 150 pounds when drawer is fully extended.
   g. Adjustable stops shall be provided for each drawer at the fully-opened position, and be readily lift-able by hand for easy removal of drawer.

h. All drawers not mounted inside a cabinet body shall be completely enclosed in an #18 gauge stainless steel box-type enclosure and suspended from angle framing under the fixture top. The housing bottom shall be flanged and welded to an #18 gauge stainless steel reinforcing channel extending across the open end.

6. Sliding Doors:
   a. Sliding doors shall be of the double pan type, with the exterior pan constructed of &2#18 gauge stainless steel with all four sides channeled and corners welded. The interior pan shall be similarly constructed of #20 gauge stainless steel, set into the exterior pan, and welded in place.
   b. All doors shall be insulated with semi-rigid fiberglass board, un-faced, having a three-pound density. Styrofoam shall not be acceptable.
   c. Doors 18" wide or greater, shall have internally welded 4" wide reinforcing channels to prevent warpage.
   d. Each door shall be fitted with a positive flush-type stainless steel pull, Standard-Kiel #1262-1014-1283 recessed handle, or approved equal.
   e. In the back of each door install a 1"x1", #16 gauge stainless steel angle stop welded in a suitable location to prevent the doors from overpassing the flush pulls.
   f. Doors in the closed position shall overlap each other by no more than 2".
   g. Each door shall be fitted with two (2), 1-3/8" ball bearing sheaves fastened to 1"x1/8" stainless steel bar stock welded to the top corners of each door for suspending on an overhead #16 gauge stainless steel channel track. The hangers shall be tapped for 1/4"-20 thumb screw vertical locks which prevent the doors from jumping the track in operation while permitting easy removal for cleaning without tools.
   h. Insure that the bottom of the doors are positively and continuously guided to assure proper alignment and passing regardless of the position of each door.
   i. Provide hard rubber bumpers for doors to close against to insure quiet operation.
7. Hinged Doors:
   a. Hinged doors shall be of the same materials and construction as sliding doors previously specified.
   b. Hinges shall be heavy duty, stainless steel, removable type, and fastened by tapping into 1/4"x3/4" stainless steel bar stock inside the door pan and behind the door jamb.
   c. The door face shall be flush with the cabinet body when fully closed.
   d. Size widths of doors equally when installed in pairs, or in series with other pairs, with no door being greater than 36" in width.
   e. Doors shall be held closed by permanent magnetic closure devices of an approved type and of sufficient strength to hold the doors shut. Install two (2) per door (minimum), mounted to the door jamb, top and bottom, with opposing chrome-plated steel plates securely fastened to the inner panel of the doors.
8. Undershelves:
   a. All open base tables shall be provided with full-length undershelves of #16 gauge stainless steel fully welded to legs with all joints ground smooth and polished.
   b. Front edge shall turn down 1-1/2" and under 1/2".
   c. Turn up rear and ends 2", with integral coved radius, when specified.
   d. If required by width, provide 1-1/2"x1-1/2"x1/8" galvanized angle bracing mounted to underside, full length.
9. Interior Shelves:
   a. All interior shelves within cabinet bodies, enclosed bases and overhead cabinets, shall be of #16 gauge stainless steel.
   b. Removable shelves shall be constructed in equal sections, and rest in 1-1/2"x1-1/2"x1/8" stainless steel angle frame. Cove all horizontal corners in accordance with N.S.F. requirements.
   c. Stationary shelves shall have 2" turn-up on back and ends, and continuously welded to cabinet body, polished and ground smooth to form a one-piece interior free of any crevices.
   d. Front edge shall turn down 1-1/2" and under 1/2", and finished with "z" bar forming completely enclosed edge for maximum strength and sanitation.
   e. Provide 1-1/2"x1-1/2"x1/8" angle bracing mounted to underside, full length.
10. Elevated Shelves:
   a. Shelves over equipment not adjacent to a wall shall be mounted on 1" diameter #16 gauge stainless steel tubular standards neatly fitted with stainless steel base flanges, unless otherwise specified.
   b. The top of the tubular standards shall be completely welded to #14 gauge stainless steel support channels, full width of overshelf.

c. Inside the tubular standard, and welded to same, provide 1/2" diameter steel tension rod extended through countertop and securely anchored to lower framework reinforcing with nuts and lock washers in such a manner as to assure a stable, sway-free structure.
d. If required by width, provide 1-1/2"x1-1/2"x1/8" stainless steel angle bracing mounted to underside, full length.
e. Cantilevered shelves, when called for, shall be #16 gauge stainless steel supported on #14 gauge stainless steel brackets welded to 1-5/8" O.D. stainless steel tubular standards extending through the backsplash, and fully welded to the table framework. Provide Klein #481-SH welded sleeves where standards penetrate backsplash.

11. Wall Shelves:
    a. Open wall shelves shall be constructed of #16 gauge stainless steel with back and ends turned up 2", positioned 2" out from face of wall, with all corners welded, and supported on #14 gauge stainless steel brackets.
    b. Brackets shall be flanged inward beneath the shelf and at the wall 1-1/2" with intersecting flanges completely welded, and attached to shelf with studs welded to the underside and bolted with stainless steel lock washers and chrome-plated cap nuts.
    c. Each bracket shall be fastened to the wall with a minimum of two (2) 1/4"-20 stainless steel bolts anchored securely by means of toggles or expansion shields.
12. Sinks:
    a. All sinks shall be the size and shape as shown on drawings, and constructed of #14 gauge stainless steel with backs, bottoms and fronts formed of one continuous sheet and the ends welded in place.
    b. Sinks shall have all corners, both vertical and horizontal, coved on a 3/4" radius electrically welded, ground smooth and polished. Solder in filleted corners will not be acceptable.
    c. Multiple compartment sinks shall be divided with double wall, #14 gauge stainless steel partitions with a 1/2" radius on top and all corners rounded as other corners, continuously welded, ground smooth and polished.
    d. The bottom of each compartment shall be creased to a die stamped recess, tapered and shaped to receive a lever type waste without the use of solder, rivets, or welding.
    e. Provide #14 gauge stainless steel waste lever angle bracket mounted to underside of compartment at front.
    f. The front and exposed ends of sinks shall be fabricated with a 1-1/2", 180º rolled edge. The back and ends adjacent to walls or other fixtures shall be turned up with integral coved edge 12" high and returned 2-1/2" at the top on a 45º angle. Cap ends of all exposed splashes.
    g. Unless otherwise specified, two (2) faucet holes on 8" centers shall be provided, located over the center line of partitions between compartments, 2-1/2" down from splash break.
    h. Gussets for legs shall be fully welded all around to #12 gauge stainless steel triangular plates fully welded to underside of sink.
    i. Sinks fabricated into working surfaces shall be constructed of the same material and in like manner to sinks specified above, except rolled edge and backsplash shall be omitted and the bowl shall be completely welded integral and flush with the working surface. Where basket type wastes are called for, they shall be fitted with removable seats.
    j. Where sink bowls are exposed, the exterior shall also be polished to a #4 finish.
13. Sink Drainboards:
    a. Drainboards shall be constructed of the same material as the sinks and shall be welded integral to same.
    b. The front portion of drainboards shall continue the 1-1/2", 180º rolled edge of sink bowls on a continuous and level horizontal plane.
    c. The surface of the drainboard shall pitch from 2-1/2" at the end furthest from the sink, to 3" at the bowl; or 1/8" per foot. In addition, the bottom surface shall be dished toward the center for complete drainage.
    d. The backsplash of the drainboard shall match the rear of the sink contour and shall be welded integral thereto, running parallel to the floor.
    e. Drainboards shall be reinforced on the underside with a framework of 1"x4"x1" stainless steel channel underbracing placed at each pair of legs, with exposed ends capped, and one (1) channel running lengthwise.
    f. Where disposer cones are fabricated into drainboards, additional 1"x4"x1" stainless steel channels shall be welded into the top framing, spanning the drainboard from front-to-back on both sides of the cone and located not more than 3" to either side.

g. Disposer control panels or switches shall be supported beneath drainboards, when specified, by means of a #12 gauge stainless steel mounting bracket.

14. Dishtable Tops:
    a. Dishtables shall be constructed of #14 gauge stainless steel with all corners, both vertical and horizontal, coved on a 3/4" radius electrically welded, ground smooth and polished. Solder in filleted corners will not be acceptable.
    b. Fronts and exposed ends shall be fabricated with a 3" high, 1-1/2", 180º rolled edge with rounded corners. The back and ends adjacent to walls or other fixtures shall be turned up with integral coved edge 12" high and returned 2-1/2" at the top on a 45º angle. Cap ends of all exposed splashes.
    c. All tops shall slope 1/8" per foot (minimum).
    d. Dishtables shall be reinforced on the underside with a framework of 1"x4"x1" stainless steel channel underbracing placed at each pair of legs, with exposed ends capped, and one (1) channel running lengthwise fully welded between front-to-back channels.
    e. Where tops fit into dishmachines, they shall turn down and into, forming a sealed watertight fit, and attached according to dishmachine manufacturers instructions.
    f. On each side of dishmachine, tables shall be provided with integral splash shields as part of the backsplash.
    g. Silicon filling of gaps caused by poor fit will not be acceptable.
    h. On corner-type door machines, provide #14 gauge stainless steel wall-mounted, splash panel to protect adjacent wall, full width of door opening.
15. Cafeteria Style Counters:
    a. All counters shall be constructed as previously specified under Enclosed Bases.
    b. Provide top and bottom framing for each counter food pan, cold pan, coffee urn, ice cream unit, ice bin, dish dispenser, etc., whether a drop-in unit or a cutout for a portable unit.
    c. Where plate shelves occur, frame horizontally 8-1/2" back from counter edge or as design dictates, and at bottom of shelf at counteredge.
    d. The countertop shall be constructed of #14 gauge stainless steel, as previously specified, with all joints welded, ground and polished.
    e. Fronts and exposed ends shall be stainless steel, plastic laminate or other material as noted in the Item Specifications.
    f. All display glass shelving shall be 1/4" polished plate glass and fully trimmed with #18 gauge stainless steel formed channels. Top shelves shall be the same width as the shelf below. Shelves shall be supported on 5/8" square, #16 gauge stainless steel perimeter tubing fully welded to 1-1/4" square, #16 gauge stainless steel tubing uprights.
    g. Provide appropriate adjustable glass sneeze or breath guards trimmed in stainless steel along front, entire length, mounted in Klein 4465-A brackets.
    h. Protector shelf over hot food wells shall be #16 gauge stainless steel supported on 1-1/4" square, #16 gauge stainless steel tubing uprights, with 1/4" polished plate glass front and end panels trimmed in #18 gauge stainless steel channels. When specified for self-service, mount bottom edge of front panel 8" above countertop.
    i. All display and protector shelves shall be furnished with full-length fluorescent lights wired to on/off switch in counter apron, with lamps and protective shields. Conceal all wiring in tubular uprights.
    j. Refer to Item Specification for changes, as required.
    k. Counter shall be internally wired complete by the K.E.C., and in such a way as to meet the requirements of the Electrical Code of the job location.

2.04 EQUIPMENT

A. All items listed on the Contract Documents under the heading "Equipment Schedule" shall be furnished in strict accordance with the foregoing specifications and with the following detailed Itemized Specifications.

B. Manufacturer's names and model numbers are shown establishing quality, size, and finish required, representing the Owner's and Consultant's requirements and basis for bid. Equipment is listed hereinafter with same item numbers as shown on Contract Documents.

PART 3 - EXECUTION

3.01 INSPECTION

A. Before beginning the installation of foodservice equipment, the spaces and existing conditions shall be examined by the K.E.C. and any deficiencies, discrepancies, or unsatisfactory conditions for proper installation of foodservice equipment shall be reported to the Architect in writing.
   1. Do not proceed with installation until unsatisfactory conditions have been corrected in a manner satisfactory to the installer.
   2. Beginning installation shall constitute acceptance of the area.

3.02 PREPARATION

A. Foodservice equipment drawings are diagrammatic and intended to show layout, arrangement, mechanical and electrical requirements.

B. Field verify all measurements at the building prior to fabrication of custom equipment. Coordinate measurements and dimensions with rough-in and space requirements.

3.03 INSTALLATION

A. The K.E.C. shall coordinate his delivery schedule with the Contractor to ensure adequate openings in the building to receive the equipment.

B. Equipment shall be un-crated, fully assembled and set level in position for final connections. Parts shipped loose but required for connection shall be properly tagged and shall be accompanied by the necessary installation instructions.

C. Provide a competent, experienced foreman to supervise installation and final connections with other trades.

D. Remote Refrigeration Systems:
   1. All refrigeration work where applicable to this contract shall be accomplished in an approved manner, using finest quality fittings, controls, valves, etc.
   2. Refrigeration items shall be started up, tested, adjusted, and turned over to the Owner in first class condition and left running in accordance with the manufacturer's instructions.
   3. Refrigeration lines and hook-ups shall be completed by the K.E.C. with the exception of electric, water, and drain line final connections unless otherwise specified.
   4. All copper tubing shall be refrigerant grade A.C.R. or type "L".
   5. Silver solder and/or Sil-Fos shall be used for all refrigerant piping. Soft solder is not acceptable.
   6. All refrigerant lines in pipe sleeves or conduit shall be effectively caulked at ends to prevent entrance of water or vermin and at penetrations through walls or floors.
   7. All tubing shall be securely anchored with clamps, and suspended lines shall be supported with adjustable hangers at 6'-0" o.c. maximum.
   8. Wrap drain line in freezer compartment(s) with approved heat-tape for final connection by Electrical Contractor.

E. Sealing and Caulking:
   1. Prior to the application of sealant, all surfaces shall be thoroughly cleaned and de-greased.
   2. Apply around each unit of permanent installation at all intersections with walls, floors, curbs or other permanent items of equipment.
   3. Joints shall be air-tight, water-tight, vermin-proof, and sanitary for cleaning purposes.
   4. In general, joints shall be not less than 1/8" wide, with backer rod to shape sealant bead properly at 1/4" depth. Shape exposed surfaces of sealant slightly concave, with edges flush with faces of materials at joint.
   5. At internal corner joints, apply sealant or gaskets to form a sanitary cove, of not less than 3/8" radius.
   6. Provide sealant-filled joints up to 3/4" in joint width. Trim strips for wider joints shall be set in a bed of sealant and attached with stainless steel fasteners, 48" o.c., or less, to insure suitable fastening and prevent buckling of the metals fastened.

F. Cutting:
   1. All cutting, fitting, or patching required during installation shall be accomplished by the K.E.C., at his own expense, so as to make the work conform to the plans and specifications.
   2. The K.E.C. shall not cut or otherwise alter, except with the consent of the Owner, the work of any other Contractor.

3. Provide cut-outs in foodservice equipment where required to run plumbing, electric, or steam lines through equipment items for final connections.

3.04 FIELD QUALITY CONTROL

A. Inspection:
1. Provide access to shop fabrication areas during normal working hours to facilitate inspection of the equipment, during construction, by the Architect or his authorized representative.
2. Errors found during these inspections shall be corrected to the extent required within the scope of the plans, specifications, and approved drawings.

B. Start-Up and Testing:
1. Delay start-up of foodservice equipment until service lines have been tested, balanced, and adjusted for pressure, voltage, and similar considerations; and until water and steam lines have been cleaned and treated for sanitation.
2. Before testing, lubricate each equipment item in accordance with manufacturer's recommendations.
3. Supply a trained person or persons who shall start up all equipment, test and make adjustments as necessary, resulting in each item of equipment, including controls and safety devices, performing in accordance with the manufacturer's specifications.
4. All gas-fired equipment shall be checked by the local gas company as to calibration, air adjustments, etc., and adjustments made as required.
5. Repair or replace any equipment found to be defective in its operation, including items which are below capacity or operating with excessive noise or vibration.

C. Demonstration:
1. Provide an operating demonstration of all equipment at a time of Owner's convenience, to be held in the presence of authorized representatives of the Architect and Owner.
2. Demonstration shall be performed by manufacturer's representative knowledgeable in all aspects of his equipment.
3. During the demonstration, instruct the Owner's operating personnel in the proper operation and maintenance of the equipment.
4. Furnish complete, bound, operation/maintenance manuals and certificates of warranty for all items of equipment provided, in accordance with Article 1.5 Submittals, Paragraph F, at this demonstration time.

3.05 ADJUST AND CLEAN

A. Upon completion of installation and tests, clean and sanitize foodservice equipment, and leave in condition ready for use in food service.

B. Remove all protective coverings, and thoroughly clean equipment both internally and externally.

C. Make and check final adjustments required for proper operation of the equipment.

D. Restore finishes marred during installation to remove abrasions, dents, and other damages. Polish stainless steel surfaces, and touch-up painted surfaces with original paint.

E. Clean up all refuse, rubbish, scrap materials, and debris caused by the work of this Section, and put the site in a neat, orderly, and broom-clean condition.

3.06 ITEMIZED EQUIPMENT

ITEM #1: UTILITY CART, MOBILE

QUANTITY:	Two (2)
MANUFACTURER:	Lakeside Manufacturing Company
MODEL NO.:	544 (N058)
PERTINENT DATA:	700-lb. Capacity, Three-Shelf, N.S.F. Model
UTILITIES REQ'D:	----
ALTERNATE MFRS.:	Piper Products

ITEM #1: (Continued)

Furnish and set-in-place per Equipment Plan, Sheet QF101; Manufacturer's Instructions and the following:

1. All four (4) casters swivel-type, in lieu of two (2) swivel, two (2) fixed.

ITEM #2: WALK-IN COOLER/FREEZER

QUANTITY:	One (1)
MANUFACTURER:	Thermo-Kool
MODEL NO.:	Indoor Installation (N058)
PERTINENT DATA:	4" Thick Durathane Construction - Class I; NSF Construction
UTILITIES REQ'D:	1750W, 120V, 1PH; (2) 3/4" IW
ALTERNATE MFRS.:	Bally; ThermalRite

Furnish and set-in-place per Equipment Plan, Sheet QF101; Building Conditions Plan, Sheet QF102; Manufacturer's Shop Drawing and the following:

1. Two Section Unit: 18'-3½" L x 7'-9" W x 9'-0" H. Interior width: Freezer - 9'-4" wide; Cooler - 7'-11½" wide.

2. Exterior Finish:
   - 26 GA stucco embossed galvanized steel where unexposed.
   - 20 GA stucco embossed stainless steel where exposed.

3. Interior Finish:
   - White acrylic enamel baked-on .040 stucco embossed aluminum walls.
   - White acrylic enamel baked on 26 GA smooth galvanized steel ceiling.

4. Interior Floor:
   - 4" prefabricated floor panels installed in 6" deep floor recess over hot asphalt paper or 10 MIL polyethylene sheets on building floor slab.
   - 2" setting bed with two (2) layers of wire reinforcing mesh fabric and quarry tile floor material with 6" high integral coved base, interior and exterior of box, installed over prefabricated floor panel by Tile Contractor.

5. Entrance Door:
   - Two (2) flush-mounted, self-closing right-hand hinged doors with 34" x 76" net opening.
   - Polished chrome camlift hinges with lift-off capability. One (1) extra hinge per door, three (3) total.
   - Kason #1236 polished chrome lever-action handle with knob-turn release and cylinder lock.
   - Kason #09440004 polished chrome mortise dead-bolt lock, factory mounted.
   - Hydraulic door closer.
   - Standard 2" diameter dial indicating thermometer factory mounted, each compartment.
   - Pilot light and switch assembly factory mounted in door frame with stainless steel coverplate.
   - 36" high aluminum diamond tread kickplates, interior and exterior of door, frame and jamb.
   - 14" x 24" heated observation windows, both compartments.
   - Undercut doors for quarry tile floor.
   - Cool Curtain Clear-Vu Model #SS3678 vinyl swinging curtains factory installed at each entrance door.
   - Kason #1806 LED light fixture with high-impact plastic cover centered over door opening to avoid conflict with shelving, each compartment. Extend wiring in conduit, foamed within door panel header, to junction box mounted on top of walk-in ceiling, each compartment.
   - Kason #907 interior door handle, factory mounted, with concealed metal backing plate.
   - Round vinyl door bumper mounted to front exterior face to protect handle from puncturing wall when door in full open position.
   - Engraved phenolic plastic compartment sign - 12" long x 2" high; white in color with 1" high blue CAPITAL letters mounted on each door above observation window; (1) - COOLER, (1) - FREEZER.
   - Stainless steel heated threshold, each compartment.

6. Heated pressure relief port in freezer, ceiling mounted.

ITEM #2: (Continued)

7. Two (2) Kason #1810L21248LB 48" long twin-tube LED light fixtures with shatter-proof high impact plastic covers centrally-mounted to walk-in ceiling per Detail, Sheet QF104; one (1) for the cooler, one (1) for the freezer. Provide low-temperature ballast (-20°F.) in freezer. Fixtures shipped loose and installed by K.E.C.; final connection by Electrical Contractor.

8. Modularm Model #75LC recessed flush-mount digital thermometer with audio-visual temperature alarm factory mounted in door frames for both cooler and freezer compartments inter-wired with building monitoring system by Electrical Contractor, as required. Extend temperature probe to rear wall of each compartment.

9. Provide and install trim strips of matching exterior finish between ends of walk-in panels and building walls from finish floor to 6" above finish ceiling; verify finished ceiling height.

10. Provide and install closure panels of matching exterior finish between top of walk-in and finish ceiling per Detail Sheet QF102; K.E.C. to verify finished ceiling height.

11. All electrical conduit shall be run concealed above walk-in ceiling, per Detail Sheet QF104.

12. Evaporator coil drain lines shall be run to floor drain with "P"-trap on exterior of box by K.E.C. Pitch drain lines 1" per foot of horizontal run.

13. Black flexible "Armaflex" insulation applied to exposed drain lines and fittings within interior of box by K.E.C.

14. Spiral heat tape applied to drain line within interior of freezer compartment prior to application of insulation by K.E.C. Drain line heating cable shall be installed for continuous 24-hour operation.

15. Coordinate location of sprinkler head drops and provide penetrations, where necessary.

16. Seal and insulate all openings to prevent infiltration of warm air into cooler/freezer compartments.

17. Quality Inspection Requirement:
    -- Walk-In shall be completely erected at the manufacturer’s facility prior to shipment and a quality control inspection performed on the assembled structure. A digital photograph of factory assembled walk-in shall be provided for the K.E.C. permanent records and included in the operation and maintenance manuals.

ITEM #3: COOLER REFRIGERATION SYSTEM

QUANTITY:	One (1)
MANUFACTURER:	ColdZone
MODEL NO.:	ORE-H080M44-2S (N058)
PERTINENT DATA:	Uni-Pak, Air-Cooled, Outdoor Installation, Remote
UTILITIES REQ'D:	4.6A, 208V, 1PH
ALTERNATE MFR.:	RDT; Omni-Temp

Furnish and set-in-place per Equipment Plan, Sheet QF101; Building Conditions Plan, Sheet QF102; Manufacturer's Shop Drawing and the following:

1. Condensing Unit: Factory Pre-Assembled, Hermetic, Medium Temperature, R-404A.

2. System located outdoors on roof. Curb with pitch-pocket furnished and installed by General Contractor.

3. Complete winterization package and condensing unit weatherproof cover.

4. Factory installed air defrost timer with contactors and relays.

5. Overall size: 28" L x 28" W x 17" H.

ITEM #3: (Continued)

6. Weight: 152 lbs.

7. Evaporator Coil with High-Efficiency EC Motors: Low-Profile, End-Mount Type, Model AA26-70B; 1.8A, 120V, 1PH
   -- System to operate at +35°F.
   -- Furnished complete with thermostat, solenoid and expansion valves factory mounted ready for final connection by Refrigeration Contractor.

8. Complete refrigeration system warrantee: five (5) years for the compressor, Two (2) years for the condensing unit, and Two (2) years for all parts of the evaporator coil.

9. Factory installed main-fused disconnect switch.

ITEM #4: FREEZER REFRIGERATION SYSTEM

QUANTITY:	One (1)
MANUFACTURER:	ColdZone
MODEL NO.:	ORE-H215L44-2T (N058)
PERTINENT DATA:	Uni-Pak Air-Cooled, Outdoor Installation, Remote
UTILITIES REQ'D:	13.1A, 208V, 3PH
ALTERNATE MFR.:	RDT; Omni-Temp

Furnish and set-in-place per Equipment Plan, Sheet QF101; Building Conditions Plan, Sheet QF102; Manufacturer's Shop Drawing and the following:

1. Condensing Unit: Factory Pre-Assembled, Hermetic, Medium Temperature, R-404A.

2. System located outdoors on roof. Curb with pitch-pocket furnished and installed by General Contractor

3. Complete winterization package and condensing unit weatherproof cover.

4. Factory installed air defrost timer with contactors and relays.

5. Overall size: 40" L x 28" W x 17" H.

6. Weight: 243 lbs.

7. Evaporator Coil with High-Efficiency EC Motors: Low-Profile, End-Mount Type, Model AE26-75B; 0.9A, 208V, 1PH (Fan); 7.0A, 208V, 1PH (Defrost Heater)
   -- System to operate at -10°F.
   -- Furnished complete with thermostat, solenoid and expansion valves factory mounted ready for final connection by Refrigeration Contractor.

8. Complete refrigeration system warrantee: five (5) years for the compressor, Two (2) years for the condensing unit, and Two (2) years for all parts of the evaporator coil.

9. Factory installed main-fused disconnect switch.

ITEM #5: SHELVING

QUANTITY: Eleven (11)
MANUFACTURER: InterMetro Industries Corporation
MODEL NO.: MetroMax i (N058)
PERTINENT DATA: Free-Standing, Open-Grid Shelf Mat, Polymer
UTILITIES REQ'D: ----
ALTERNATE MFRS.: None

Furnish and set-in-place per Equipment Plan, Sheet QF101; Manufacturer's Instructions and the following:

Cooler:

1. Two (2) #MX1836G sections; 18" W x 36" L x 4-tier high.

2. Two (2) #MX1842G sections; 18" W x 42" L x 4-tier high.

3. One (1) #MX1854G section; 18" W x 54" L x 4-tier high.

4. Twenty (20) #MX63P polymer posts, 63" high.

5. Plastic wedge lock connectors, quantity as required.

6. Locate bottom shelf @ 12" A.F.F.; space remaining shelves equally.

Freezer:

1. Two (2) #MX1836G sections; 18" W x 36" L x 4-tier high.

2. Three (3) #MX1842G sections; 18" W x 42" L x 4-tier high.

3. One (1) #MX1848G section; 18" W x 48" L x 4-tier high.

4. Twenty-four (24) #MX63P polymer posts, 63" high.

5. Plastic wedge lock connectors, quantity as required.

6. Locate bottom shelf @ 12" A.F.F.; space remaining shelves equally.

ITEM #6: SHELVING

QUANTITY: Eight (8)
MANUFACTURER: InterMetro Industries Corporation
MODEL NO.: Super Erecta (N058)
PERTINENT DATA: Stationary, Free-Standing, Chrome-Plated, Wire
UTILITIES REQ'D: ----
ALTERNATE MFRS.: None

Furnish and set-in-place per Equipment Plan, Sheet QF101; Manufacturer's Instructions and the following:

Dry Storage:

1. Eight (8) #2142NC sections; 21" W x 42" L x 5-tier high.

2. Thirty-two (32) #74P chrome-plated posts; 74-5/8" high.

3. Plastic split sleeves, quantity as required.

ITEM #6: (Continued)

4. Locate bottom shelf @ 12" A.F.F.; space remaining shelves equally.

ITEM #7: HAND SINK

QUANTITY:	Three (3)
MANUFACTURER:	Eagle Foodservice Equipment Company
MODEL NO.:	HSA-10-FAW-LRS (N058)
PERTINENT DATA:	Wall Mounted, Wrist Action Faucet
UTILITIES REQ'D:	1/2" HW, 1/2" CW, 1-1/2" W
ALTERNATE MFRS.:	Advance/Tabco; Universal

Furnish and set-in-place per Equipment Plan, Sheet QF101; Manufacturer's Instructions and the following:

1. Complete sink assembly consisting of: gooseneck faucet, p-trap, tailpiece and basket drain.

2. Accessories (each unit):
   -- #606215 skirt assembly.
   -- Integral right and left stainless steel splash shield.

ITEM #8: SOAP & TOWEL DISPENSER

QUANTITY:	Three (3)
MANUFACTURER:	Bobrick Washroom Equipment, Inc.
MODEL NO.:	B-5050/B-262 (N058)
PERTINENT DATA:	Surface Wall Mounted, Stainless Steel Finish (400) C-Fold Capacity
UTILITIES REQ'D:	----
ALTERNATE MFRS.:	None

Furnish and set-in-place per Equipment Plan, Sheet QF101; Manufacturer's Instructions and the following:

1. Mount units above hand sink and seal perimeter to wall.

ITEM #9: PREP SINK

QUANTITY:	One (1)
MANUFACTURER:	Custom Fabricated
MODEL NO:	#14 GA Stainless Steel
PERTINENT DATA:	8'-0" Long x 2'-6" Wide x 2'-10" High
UTILITIES REQ'D:	1/2" HW, 1/2" CW, (2) 1-1/2" IW
ALTERNATE MFRS.:	None

Fabricate and set-in-place per Equipment Plan, Sheet QF101; Fabrication Detail, Sheet QF501; and the following:

1. Front and end edge rolls per Detail 1.02B.

2. 13" high backsplash per Detail 1.04A with finished back.

3. Framework per Detail 1.05.

4. Legs per Detail 1.07. Flanged feet on each corner leg.

5. Stainless steel undershelf on both ends per Detail 1.11.

ITEM #9: (Continued)

6. Sound-deaden underside of sinks and drainboards with NSF-approved sound dampening material.

7. Accessories:
   -- One (1) T&S #B-0231 backsplash-mounted swing spout faucet with #B-0199-1 aerator.
   -- Two (2) T&S #B-3950-01 twist waste valves with overflow assemblies and #010387-45 basket strainers.
   -- Two (2) duplex receptacles with stainless steel faceplates mounted in finished backsplash. Final connection by Electrical Contractor.

8. Item will remain shrink-wrapped until ready for final connection by Plumbing Contractor. Immediately following completion of final connections, K.E.C. shall re-shrink-wrap tubs or provide removable panel to avoid use by construction trades. Post sign on wall above sink tubs in English and Spanish stating: WARNING! NOT TO BE USED BY CONSTRUCTION TRADES. FAILURE TO COMPLY WILL RESULT IN $500.00 FINE AND ALL COSTS TO REPLACE ITEM WITH NEW.

ITEM #10: REACH-IN REFRIGERATOR, MOBILE

QUANTITY:	One (1)
MANUFACTURER:	Continental Refrigerator
MODEL NO.:	DL2R-SS-HD (N058)
PERTINENT DATA:	Designer Line Series, Two-Section, Self-Contained, Stainless Steel Interior/Exterior
UTILITIES REQ'D:	9.1A, 120V, 1PH
ALTERNATE MFR.:	True Food Service Equipment

Furnish and set-in-place per Equipment Plan, Sheet QF101; Manufacturer's Instructions and the following:

1. Half-height doors hinged per Equipment Plan.

2. Cylinder door locks, keyed-alike.

3. Interior fitted with standard wire shelves, three (3) per compartment, twelve (12) total.

4. Exterior mounted digital thermometer.

5. 5" diameter heavy-duty swivel casters, front two (2) with brakes.

6. Cord and plug set.

ITEM #11: UNDERCOUNTER BLAST CHILLER

QUANTITY:	One (1)
MANUFACTURER:	Piper Products
MODEL NO.:	RCR051S (N058)
PERTINENT DATA:	One-Section, Self-Contained, Stainless Steel Interior/Exterior
UTILITIES REQ'D:	5.4A, 208V, 1PH
ALTERNATE MFRS.:	Delfield

Furnish and set-in-place per Equipment Plan, Sheet QF101; Manufacturer's Instructions and the following:

1. 2½" high stainless steel legs with adjustable bullet feet.

2. Cord and plug set with matching receptacle furnished and installed by Electrical Contractor.

ITEM #12: SLICER

QUANTITY: One (1)
MANUFACTURER: Hobart Corporation
MODEL NO.: 2712-1 (N058)
PERTINENT DATA: Automatic 2-Speed Carriage Drive, 12" Diameter Blade, With Low Fence
UTILITIES REQ'D: 1/2 HP, 120V, 1PH
ALTERNATE MFRS.: Berkel; Globe

Furnish and set-in-place per Equipment Plan, Sheet QF101; Manufacturer's Instructions and the following:

1. Accessories:
   -- One (1) #161712-FENHGH adjustable high fence.
   -- One (1) #FOOD-CHUTE tubular chute with plunger.
   -- Operator training video tape.

2. Cord and plug set.

ITEM #13: FOOD PROCESSOR

QUANTITY: One (1)
MANUFACTURER: Robot Coupe USA, Inc.
MODEL NO.: R-602V (N058)
PERTINENT DATA: Continuous Feed Hopper, Dual Purpose, Variable Speed, 7-Qt. Bowl
UTILITIES REQ'D: 15.0A, 120V, 1PH
ALTERNATE MFRS.: None

Furnish and set-in-place per Equipment Plan, Sheet QF101; Manufacturer's Instructions and the following:

1. Standard food processor package consisting of: food processor, 7-qt. stainless steel bowl, continuous feed vegetable preparation attachment, (1) #28058 1/8" grating disc and (1) #28064 1/8" slicing disc.

2. Accessories:
   -- One (1) #R255 disc rack.

3. Cord and plug set.

ITEM #14: WORKTABLE

QUANTITY: One (1)
MANUFACTURER: Custom Fabricated
MODEL NO.: #14 GA Stainless Steel
PERTINENT DATA: 8'-0" Long x 2'-6" Wide x 3'-0" High
UTILITIES REQ'D: ----
ALTERNATE MFRS.: None

Fabricate and set-in-place per Equipment Plan, Sheet QF101; Fabrication Detail, Sheet QF501; and the following:

1. Perimeter edge rolls per Detail 1.02M.

2. Framework per Detail 1.05.

3. Legs per Detail 1.07.

4. Stainless steel undershelf per Detail 1.11.

ITEM #14: (Continued)

5. One (1) stainless steel drawer assembly per Detail 1.14, Type I with locks.

6. Worktable per Detail 2.01.

7. Sound-deaden underside of tabletop with NSF-approved sound dampening material.

ITEM #15: POT WASHING SINK

QUANTITY:	One (1)
MANUFACTURER:	Custom Fabricated
MODEL NO.:	#14 GA Stainless Steel
PERTINENT DATA:	12'-0" Long x 2'-6" Wide x 3'-0" High
UTILITIES REQ'D:	(2) 3/4" HW, (2) 3/4" CW, (3) 2" IW
ALTERNATE MFR.:	None

Fabricate and set-in-place per Equipment Plan, Sheet QF101; Fabrication Detail, Sheet QF501; and the following:

1. Front and end edge roll per Detail 1.02B.

2. 13" high backsplash per Detail 1.04A with finished back.

3. Framework per Detail 1.05

4. Legs per Detail 1.07. Flanged feet on each corner leg.

5. Crossbracing per Detail 1.10.

6. Stainless steel undershelf on both ends per Detail 1.11.

7. Pot sink and drainboards per Detail 3.01.

8. Sound-deaden underside of sinks and drainboards with NSF-approved sound dampening material.

9. Accessories:
   - -- Two (2) T&S #B-290 backsplash mounted swing spout faucets.
   - -- Three (3) T&S #B-3950-01 twist waste valves with overflow assemblies and #010387-45 basket strainers.
   - -- Two (2) duplex receptacles with stainless steel faceplates mounted in finished backsplash. Final connection by Electrical Contractor.

10. Item will remain shrink-wrapped until ready for final connection by Plumbing Contractor. Immediately following completion of final connections, K.E.C. shall re-shrink-wrap tubs or provide removable panel to avoid use by construction trades. Post sign on wall above sink tubs in English and Spanish stating: WARNING! NOT TO BE USED BY CONSTRUCTION TRADES. FAILURE TO COMPLY WILL RESULT IN $500.00 FINE AND ALL COSTS TO REPLACE ITEM WITH NEW.

ITEM #16: POT & PAN SHELVING, MOBILE

QUANTITY:	One (1)
MANUFACTURER:	InterMetro Industries Corporation
MODEL NO.:	MetroMax i (N058)
PERTINENT DATA:	Four-Tier High, Polymer, Open Grid Mat Shelf
UTILITIES REQ'D:	----
ALTERNATE MFR.:	None

ITEM #16: (Continued)

Furnish and set-in-place per Equipment Plan, Sheet QF101, Manufacturer's Instructions and the following:

1. One (1) #MX2448G section; 24" W x 48" L x 4-tier high.

2. Four (4) #MX63UP polymer posts for stem casters, 63" high.

3. Two (2) #5MPX polyurethane swivel casters with donut bumpers.

4. Two (2) #5MPBX polyurethane swivel casters with brakes and donut bumpers.

5. Plastic wedge lock connectors, quantity as required.

6. Locate bottom shelf @ 12" A.F.F., space remaining shelves equally.

7. Accessories:
   -- Two (2) #MTR2448XE tray drying racks.
   -- Ten (10) #MXD24-8 shelf dividers.

ITEM #17: WASHER/DRYER, STACKED – (N.I.K.E.C. - SPECIFIED BY ARCHITECT)

QUANTITY: One (1)

ITEM #18: ICE MACHINE/BIN

QUANTITY: One (1)
MANUFACTURER: Manitowoc Equipment Works
MODEL NO.: ID-0322A/B-420 (N058)
PERTINENT DATA: Air-Cooled, 350-LB. Maker, 310-LB. Bin, Dice Size Cubes
UTILITIES REQ'D: 11.5A, 120V, 1PH; 1/2" CW, 1/2" IW (Maker Drain), 3/4" IW (Bin Drain)
ALTERNATE MFRS.: Scotsman; Ice-O-Matic

Furnish and set-in-place per Equipment Plan, Sheet QF101; Manufacturer's Instructions and the following:

1. Stainless steel exterior finish, ice machine and bin.

2. Accessories:
   -- One (1) Everpure Model EV9324-21 InsurIce 2000 single water filter system with 20" Coarse Filter factory assembled to common wall mounting rack.
   -- 6" high stainless steel leg set with adjustable bullet feet.
   -- Custom fabricated stainless steel ice scoop holder bracket mounted to right-side of bin per Detail, Sheet QF501.

ITEM #19: WORKTABLE WITH SINK

QUANTITY: One (1)
MANUFACTURER: Custom Fabricated
MODEL NO.: #14 GA Stainless Steel
PERTINENT DATA: 12'-0" Long x 2'-6" Wide x 3'-0" High
UTILITIES REQ'D: ½" HW, ½" CW, 1-½" IW
ALTERNATE MFR.: None

ITEM #19: (Continued)

Fabricate and set-in-place per Equipment Plan, Sheet QF101; Fabrication Detail, Sheet QF501 and the following:

1. Perimeter edge roll per Detail 1.02M.

2. Framework per Detail 1.05.

4. Legs per Detail 1.07.

5. Crossbracing per Detail 1.10.

6. Stainless steel undershelf per Detail 1.11.

6. Two (2) stainless steel drawer assemblies per Detail 1.14, Type I, with locks.

7. Worktable per Detail 2.01.

8. 18" x 18" x 10" deep utility sink per Detail 3.04 with waste lever angle bracket welded to underside of sink.

9. Sound-deaden underside of tabletop and sink with NSF-approved sound dampening material.

10. Accessories:
    -- One (1) T&S #B-325 deck-mounted swivel gooseneck faucet with #B-199-1 aerator.
    -- One (1) T&S #B-3950-01 twist waste valve with overflow assembly and #010387-45 basket strainer.

ITEM #20: CONVECTION OVEN

QUANTITY:	One (1)
MANUFACTURER:	Blodgett Oven Company, Inc.
MODEL NO.:	HV-100G-DOUBLE (N058)
PERTINENT DATA:	Double Section, Standard Depth, HydroVection™
UTILITIES REQ'D:	(2)20.0, 120V, 1PH; (2)3/4" CW, (2)1" IW; ¾" Natural Gas @ 120 MBH
ALTERNATE MFRS:	None

Furnish and set-in-place per Equipment Plan, Sheet QF101; Manufacturer's Instructions and the following:

1. Natural gas fired, pressure regulator as required. Manifold rear gas connection of each oven compartment for single connection point ready for quick disconnect assembly furnished with Item #22.

2. Standard compliment of wire racks, five (5) per section.

3. Accessories:
    -- 11" adjustable legs.
    -- MenuSelect control with core probe.
    -- Stacking kit.
    -- Ten (10) multi-purpose fry pans.
    -- Five (5) additional stainless steel wire racks.
    -- One (1) Everpure #EV9797-21 KleenSteam II Single System Water Filter. Ship to Utility Raceway manufacturer for factory installation.

4. Approved backflow preventor furnished and installed by Plumbing Contractor.

5. Mechanical and electrical service supplied through Utility Raceway, Item #22.

ITEM #21: EXHAUST CANOPY

QUANTITY:	One (1)
MANUFACTURER:	Captive-Aire Systems, Inc.
MODEL NO.:	6630VHB-ND (N058)
PERTINENT DATA:	Stainless Steel, Non-Grease, Heat/Vapor Removal Only Type
UTILITIES REQ'D:	1,725 CFM Exhaust; 350W, 120V, 1PH (Lights)
ALTERNATE MFR.:	Avtec; Gaylord

Furnish and install per Equipment Plan, Sheet QF101; Utility Raceway Details, Sheet QF502; Manufacturer's Instructions and the following:

1. 5'-6" Wide x 12'-0" Long x 2'-6" High with bottom edge mounted at 6'-8" A.F.F. Length comprised of one (1) 12'-0" section. Entire unit constructed of 18 GA stainless steel type 304 with #4 finish on all exposed surfaces with liquid tight all welded external continuous seams and joints per N.F.P.A. 96,U.L. and State of Delaware Codes.

2. Two (2) U.L. Listed, NSF-Approved, 48" long twin-tube recessed LED light fixtures, equally spaced. Bulbs furnished and installed by K.E.C.

3. Matching stainless steel perimeter closure panels to finished ceiling; K.E.C. to verify ceiling height.

4. On/Off fan and light switches factory mounted in Item #22: Utility Raceway.

5. Hanger rods and support system from structure above by Contractor. K.E.C. to coordinate method and location with other trades.

6. Integral stainless steel hanger brackets.

7. 8" wide stainless steel angle framing and closure panels @ rear to accommodate Utility Raceway, Item #22.

8. Exhaust hood shall be of same manufacturer as Utility Raceway, Item #22.

ITEM #22: UTILITY RACEWAY

QUANTITY:	One (1)
MANUFACTURER:	Captive-Aire Systems, Inc.
MODEL NO.:	UDW (N058)
PERTINENT DATA:	Wall-Mounted
UTILITIES REQ'D:	14.4KW, 120/208V, 3PH; 1"CW; 1-1/4" Natural Gas @ 960MBH (Looped Service)
ALTERNATE MFRS.:	Avtec; Gaylord

Furnish and install per Equipment Plan, Sheet QF101; Utility Raceway Details, Sheet QF502; Manufacturer's Instructions and the following:

1. All components and labor necessary for a complete system manufactured in accordance with NEC latest edition, NEMA, NFPA No. 96 and No. 54, Uniform Plumbing Code, ASME, OSHA using only U.L. Listed certified components.

2. 12'-0" long x 8" wide x 6'-10" high with risers, completely pre-wired and pre-plumbed to one final connection point for electric, cold water and gas. All connections shall face down on horizontal member.

3. System shall extend up to bottom edge of Exhaust Canopy, Item #21.

4. 54" overall height less risers with peaked top.

5. 36" wide x 6'-10" high risers on each end with 2" penetration into ventilator at 6'-8" A.F.F.

ITEM #22: (Continued)

6. Entire raceway shall be constructed of #16 gauge Type 304 stainless steel with a #4 mill finish.

7. Removable link plates constructed of #16 gauge stainless steel.

8. Electrical compartment shall be completely enclosed with stainless steel housing accessible by the removal of link plates. Internal electrical feeder shall be cable wireway having balanced load and phases and with connection lugs for main service. Branch circuit wiring for each electrical connection shall be phase identified and sized in accordance with circuit breaker rated capacity. Raceway shall provide electrical, gas and water service for items #20, #23 and #24.

9. Provide 12" long interchangeable 16 gauge stainless steel link connection plate for each electrical connection equipped with individual circuit breaker(s) installed in breaker panel mounted in right-hand riser, and grounding type receptacle with twist-lock feature or pre-wired flexible sealtite conduit.

10. On each connection plate provide U.L. listed GFIC ground fault interrupter circuits and matching power supply cords on each 120-volt single-phase connection.

11. Cold water plumbing compartment shall be isolated from electrical compartment. All piping and disconnects in system shall be color coded.

12. At each individual gas branch connection, provide 1/4-turn ball valve and 48" long Dormont PVC coated AGA and NSF approved flexible hose with SnapFast quick-disconnect device and double SwivelMAX gas connectors.

13. Provide fire/fuel shut-off for electric equipment per NFPA No. 96. System shall require one final connection by Contractor from fire protection system.

14. All cold water piping, including individual branch pipe connection, shall be hard temper type "L" copper tubing with copper sweat type solder fittings. At each individual connection, provide A.G.A approved flexible hose(s) with two wall brass and stainless steel construction with quick-disconnect fittings.

15. Provide matching cord sets for all electric equipment, five (5) total.

16. Neoprene bumper strips, full length.

17. U.L. listed, solid-state control panel mounted in right-hand riser end, with the following integral accessories:
    -- Ventilator start/stop station with adjustable time-delay to exhaust residual heat.
    -- Ventilator light switch, pre-wired in 10ft. flexible conduit ready for connection to light junction box in ventilator by Electrical Contractor.

18. Accessories:
    -- One (1) Everpure #EV9797-21 KleenSteam II water filter system factory-installed and housed within left-hand riser. Provide one (1) independent pre-piped water line to service point for Item #20: Convection Oven. Fabricate 18"x18" lexan viewport in riser panel to monitor pressure gauge and filter bowl.

19. Fabricated in three (3) sections, assembled in field to present integral one-piece appearance.

20. Main electrical shunt-type circuit breakers mounted in left-hand riser for 50A, 120/208V, 3PH service.

21. Factory supervision of installation and start-up.

22. Raceway shall be of same manufacturer as Exhaust Canopy, Item #21.

ITEM #23: CONVECTION STEAMER

QUANTITY: One (1)
MANUFACTURER: AccuTemp Products, Inc.
MODEL NO.: N61201E060 DBL (N058)
PERTINENT DATA: (2) Double Stacked, Stand-Mounted 6-Pan, Connected Boilerless, Evolution Series
UTILITIES REQ'D: (2)1.0A, 120V, 1PH; (2) 3/4" CW, (2) 3/4" IW; (2)1/2" Natural Gas @ 60 MBH
ALTERNATE MFRS.: None

Furnish and set-in-place per Equipment Plan, Sheet QF101; Manufacturer's Instructions and the following:

1. Accessories:
   -- #SNH-20-00 heavy-duty stainless steel support stand with adjustable bullet feet.

2. Electrical and mechanical services provided thru Utility Raceway, Item #22.

ITEM #24: CONVECTION OVEN, MOBILE

QUANTITY: One (1)
MANUFACTURER: Blodgett Oven Company, Inc.
MODEL NO.: DFG-100-SINGLE (N058)
PERTINENT DATA: Single-Deck, Standard Depth
UTILITIES REQ'D: 1/3 HP, 120V, 1PV; 3/4" Natural Gas @ 55 MBH
ALTERNATE MFRS: None

Furnish and set-in-place per Equipment Plan, Sheet QF101; Manufacturer's Instructions and the following:

1. Natural gas fired, pressure regulator as required.

2. Standard compliment of wire racks, five (5) per section.

3. Doors with dual pane thermal windows and interior light package.

4. Accessories:
   -- Stainless steel front, both sides, top and solid back panels.
   -- Four (4) heavy-duty 5" diameter polyurethane swivel casters, front two (2) with brakes.
   -- Blower fan guard.

5. Cord and plug sets.

6. Electrical and mechanical services supplied through Utility Raceway, Item #22.

ITEM #25: PAN RACK CART, MOBILE

QUANTITY: Two (2)
MANUFACTURER: CresCor
MODEL NO.: 207-UA-13A (N058)
PERTINENT DATA: Universal Angles, Channel Posts, (18) 22x20 Pan Capacity
UTILITIES REQ'D: ----
ALTERNATE MFR: InterMetro; Lakeside

Furnish and set-in-place per Equipment Plan, Sheet QF101; Manufacturer's Instructions and the following:

1. Accessories:
   -- Full perimeter non-marking wrap-around vinyl bumper.

ITEM #26: PASS-THRU REFRIGERATOR, MOBILE

QUANTITY: Two (2)
MANUFACTURER: Continental Refrigerator
MODEL NO.: DL1R-SS-PT-HD (N058)
PERTINENT DATA: Designer Line Series, Two-Section, Self-Contained, Stainless Steel Exterior/Interior
UTILITIES REQ'D: 7.2A, 120V, 1PH
ALTERNATE MFRS.: True

Furnish and set-in-place per Equipment Plan, Sheet QF101; Manufacturer's Instructions and the following:

1. Half-height doors hinged per Equipment Plan. Glass doors on kitchen side, solid doors on serving side.

2. Cylinder door locks, keyed-alike.

3. #16 gauge stainless steel, angle type, bottom support tray slides for 18"x26" pans in lieu of wire shelves installed on 3" centers, nine (9) pair per compartment, eighteen (18) total, each unit.

4. Exterior mounted digital thermometer installed on kitchen side.

5. Plastic laminate finish factory applied to door fronts on serving side only; color as selected by Architect, K.E.C. to verify.

6. Set of four (4), 5" diameter heavy-duty swivel-type locking casters with brakes.

7. Cord and plug set.

ITEM #27: PASS-THRU HEATED CABINET, MOBILE

QUANTITY: Two (2)
MANUFACTURER: Piper Products
MODEL NO.: 1016-SS-D (N058)
PERTINENT DATA: Double Unit, Insulated, Stainless Steel Exterior/Interior
UTILITIES REQ'D: 33.3A, 120V, 1PH
ALTERNATE MFRS.: CresCor; InterMetro

Furnish and set-in-place per Equipment Plan, Sheet QF101; Manufacturer's Instructions and the following:

1. Half-height doors hinged per Equipment Plan. Glass doors on kitchen side, solid doors on serving side.

2. Cylinder door locks, keyed-alike.

3. Accessories:
   -- Full-perimeter wrap-around non-marking vinyl bumper.

4. Cord and plug set.

ITEM #28: MILK COOLER, MOBILE

QUANTITY: Two (2)
MANUFACTURER: Continental Refrigerator
MODEL NO.: MC3-SS-S (N058)
PERTINENT DATA: 34" Wide, Single Access, Forced-Air, 8 Cu. Ft. Capacity
UTILITIES REQ'D: 1/4HP, 120V, 1PH
ALTERNATE MFR.: True

ITEM #28: (Continued)

Furnish and set-in-place per Equipment Plan, Sheet QF101; Manufacturer's Instructions and the following:

1. Stainless steel exterior and interior.

2. Cord and plug set.

3. Cylinder lid lock.

4. Swivel casters with brakes.

5. Accessories:
   -- #5-223 corner bumpers.

ITEM #29: SERVING COUNTER

QUANTITY:	One (1)
MANUFACTURER:	Elite 500 by Piper Products
MODEL NO.:	Modular Interlocking Sections
PERTINENT DATA:	T-Shaped Configuration, #14 Gauge S/S Tops
UTILITIES REQ'D:	----
ALTERNATE MFRS.:	Director’s Choice by Eagle Group; Shelleysteel by The Delfield Co.

Refer to individual counter components listed under alpha headings for specification.

ITEM #29A: HOT FOOD COUNTER

QUANTITY:	Two (2)
MANUFACTURER:	Elite 500 by Piper Products
MODEL NO.:	5-HF-MOD (N058)
PERTINENT DATA:	Electrically Heated, Open Base, Five (5) Wells
UTILITIES REQ'D:	24.0A, 208V, 1PH
ALTERNATE MFRS.:	Director’s Choice by Eagle Group; Shelleysteel by The Delfield Co.

Furnish and set-in-place per Equipment Plan, Sheet QF101; Manufacturer's Shop Drawing and the following:

1. (SRTS-74) - 10" wide full-length solid stainless steel tray slide with mitered end mounted on rigid brackets @ 29" A.F.F..

2. (SCB-74) - 8" wide full-length fold-down stainless steel work shelf on server's side.

3. (CPGL-74) – Cafeteria-style food protector with tempered glass front and end panels with lights.

4. Line-up interlocks for counter body and tray slide.

5. Cord and plug set.

6. (SSL) - 6" high stainless steel legs with adjustable bullet feet.

7. (SD-74) – Sliding doors with lock on server’s side.

8. Standard counter height of 36" A.F.F. turn end down to align and interlock with adjacent cold food counter.

9. Laminate front and ends, color as selected by Architect; K.E.C. to verify.

ITEM #29B: COLD FOOD COUNTER

QUANTITY:	Two (2)
MANUFACTURER:	Elite 500 by Piper Products
MODEL NO.:	4CM-MOD (N058)
PERTINENT DATA:	Mechanically-Refrigerated Cold Pan, Open Base, NSF 7
UTILITIES REQ'D:	6.3A, 120V, 1PH; 3/4" IW
ALTERNATE MFRS.:	Director's Choice by Eagle Group; Shelleysteel by The Delfield Co.

Furnish and set-in-place per Equipment Plan, Sheet QF101; Manufacturer's Shop Drawing and the following:

1. (SRTS-74) - 10" wide full-length solid stainless steel tray slide with mitered end mounted on rigid brackets @ 29" A.F.F..

2. (CDDL) – Cafeteria style two-tier display with tempered glass front and ends with lights.

3. Line-up interlocks for counter body and tray slide.

4. Cord and plug set.

5. (SSL) – 6" high stainless steel legs with adjustable bullet feet.

6. (FB) - False bottom.

7. Modified counter height of 30" A.F.F.

8. Modify length of cold pan and display case to allow adequate passage for 10"x14" compartmented tray between cold pan and adjacent hot food counter.

9. Laminate front and ends, color as selected by Architect; K.E.C. to verify.

ITEM #29C: CORNER SOLID TOP COUNTER

QUANTITY:	Two (2)
MANUFACTURER:	Elite 500 by Piper Products
MODEL NO.:	R2-ST-MOD (N058)
PERTINENT DATA:	36" Wide, Open Base
UTILITIES REQ'D:	----
ALTERNATE MFRS.:	Director's Choice by Eagle Group; Shelleysteel by The Delfield Co.

Furnish and set-in-place per Equipment Plan, Sheet QF101; Manufacturer's Shop Drawing and the following:

1. Line-up interlocks for counter body.

2. (SSL) – 6" high stainless steel legs with adjustable bullet feet.

3. (SD-36) – Sliding doors with lock on server's side.

4. (DOUT) - 15-amp duplex convenience receptacle mounted in counter apron, server's side.

5. Cord and plug set.

6. Modified counter height of 30" A.F.F.

7. Laminate front and ends, color as selected by Architect; K.E.C. to verify.

ITEM #29D: CASHIER STAND

QUANTITY: Two (2)
MANUFACTURER: Elite 500 by Piper Products
MODEL NO.: 2-CD-MOD (N058)
PERTINENT DATA: 30" Long
UTILITIES REQ'D: 15A, 120V, 1PH (Dedicated Circuit)
ALTERNATE MFRS.: Director's Choice by Eagle Group; Shelleysteel by The Delfield Co.

Furnish and set-in-place per Equipment Plan, Sheet QF101; Manufacturer's Shop Drawing and the following:

1. (SRTS-30) - 10" wide full-length solid stainless steel tray slide with mitered end mounted on rigid brackets@ 29" A.F.F. Extend tray slide to span length of Item #29C: Solid Top Counter and interlock with cold food counter.

2. Line-up interlocks for countertop and tray slide.

3. (DOUT) - 15-amp convenience outlet mounted below top in counter body. Provide die-raised opening in top for power cord access.

4. Cashier's utility drawer with locking provision mounted on end.

5. (SSL) – 6" high stainless steel legs with adjustable bullet feet.

6. Cord and plug set.

7. Standard counter working height of 36" A.F.F. Turn top down to align & interlock with adjacent solid top counter.

8. Laminate front and ends, color as selected by Architect; K.E.C. to verify.

ITEM #30: WORKCOUNTER

QUANTITY: Two (2)
MANUFACTURER: Custom Fabricated
MODEL NO.: #14 GA Stainless Steel
PERTINENT DATA: 5'-0" Long x 2'-6" Wide x 3'-0" High
UTILITIES REQ'D: ----
ALTERNATE MFRS.: None

Fabricate and set-in-place per Equipment Plan, Sheet QF101; Fabrication Detail, Sheet QF501; and the following:

1. Front and end edge roll per Detail 1.02M.

2. 6" high backsplash per Detail 1.04A.

3. Counter framework per Detail 1.06.

4. Heavy-duty counter legs per Detail 1.08.

5. Workcounter per Detail 4.01.

6. Stainless steel hinged doors per Detail 4.26, with locks and laminate finish, color as selected by Architect; K.E.C. to verify.

7. Sound-deaden underside of tabletop with NSF-approved sound dampening material.

ITEM #31: CASH REGISTER -- (N.I.K.E.C. – FURNISHED BY OWNER)

QUANTITY: Two (2)

ITEM #32: CONDIMENT COUNTER, MOBILE

QUANTITY: One (1)
MANUFACTURER: Elite 500 by Piper Products
MODEL NO.: 2TSL-MOD (N058)
PERTINENT DATA: 50" Long, With Storage Base
UTILITIES REQ'D: ----
ALTERNATE MFRS.: Director's Choice by Eagle Group; Shelleysteel by The Delfield Co.

Furnish and set-in-place per Equipment Plan, Sheet QF101; Manufacturer's Shop Drawing and the following:

1. (SRTS-50) - 10" wide full-length solid tray slides mounted on fold-down brackets, on both sides.

2. Enclosed understorage base with bottom and intermediate stainless steel shelf and stainless steel sliding doors with lock.

3. 5" diameter heavy-duty swivel casters, all four (4) with brakes.

4. Modified counter height of 30" A.F.F.

5. Laminate front, back and ends, color as selected by Architect; K.E.C. to verify.

ITEM #33: MOP SINK & RACK -- (N.I.K.E.C. – SPECIFIED UNDER MECHANICAL DIVISION)

QUANTITY: One (1)

ITEM #34: SHELVING -- (N.I.K.E.C. – SPECIFIED BY ARCHITECT)

QUANTITY: One (1)

(END OF FOODSERVICE ITEMIZED SPECIFICATIONS)

STANDARD DETAILS

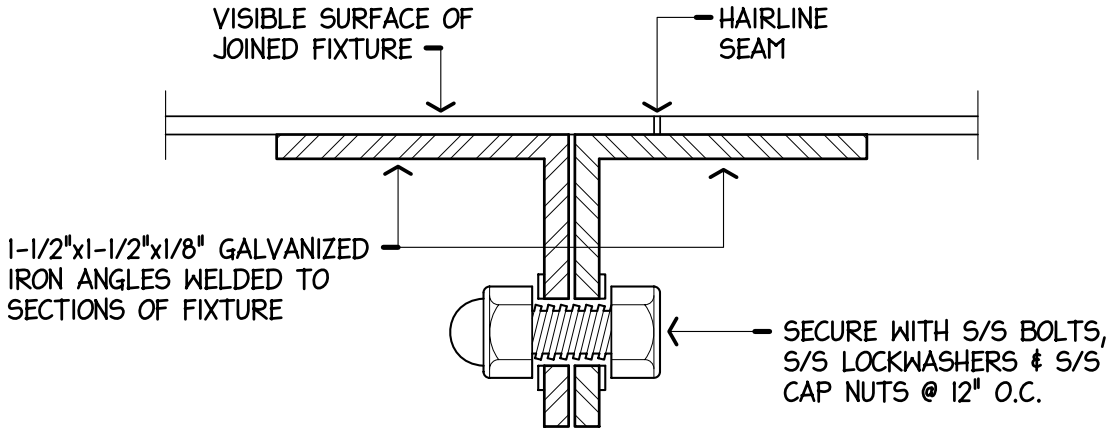

NOTE! JOINED SECTIONS SHALL BE DRAWN TOGETHER LEAVING ONLY A HAIRLINE SEAM.

A. BOLT DRAWN JOINT

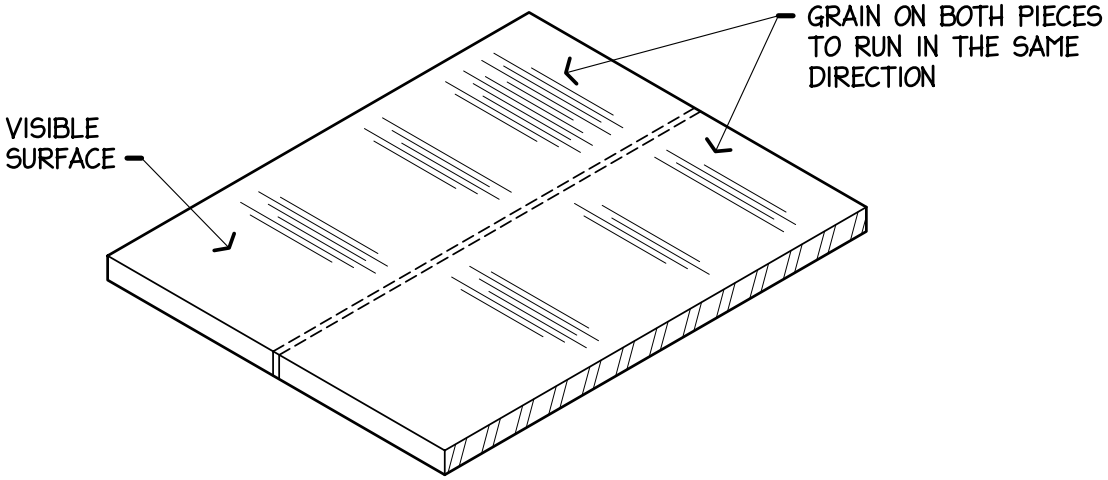

NOTE! ON FIXTURES SPECIFIED WITH WELDED FIELD JOINTS, WELDS SHALL BE CONTINUOUS, GROUND & POLISHED LEAVING NO VISIBLE EVIDENCE OF WELD.

B. WELDED BUTT JOINT

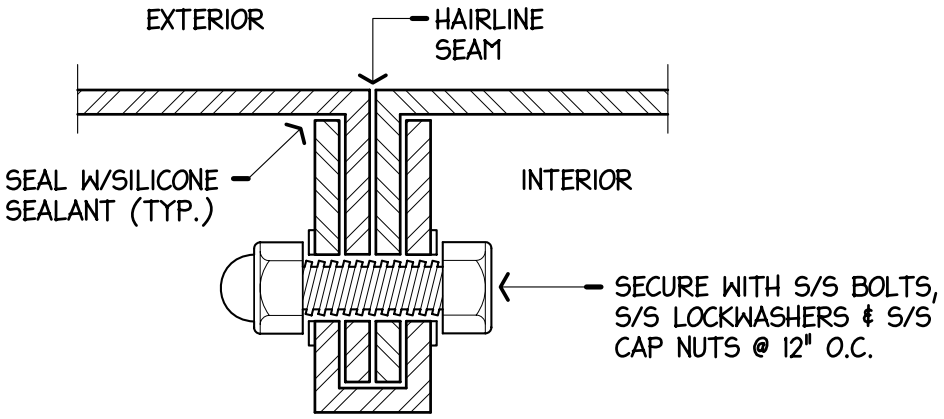

NOTE! JOINED SECTIONS SHALL BE DRAWN TOGETHER LEAVING ONLY A HAIRLINE SEAM.

C. RAISED CAP SEAM - KNUCKLE JOINT

NYIKOS ASSOCIATES, INC. Food Facilities Design/Consulting	DESCRIPTION: FIELD JOINTS & ASSEMBLY	STANDARD DTL: 1.01 PAGE: 114000-40

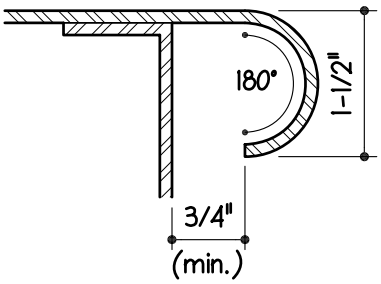

ROLLED A.

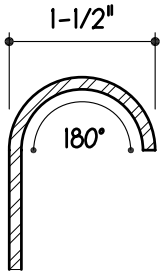

RAISED ROLLED B.

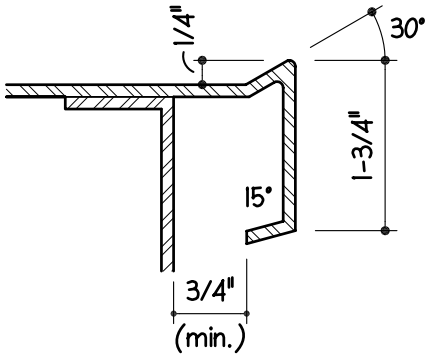

INVERTED "V" EDGE C.

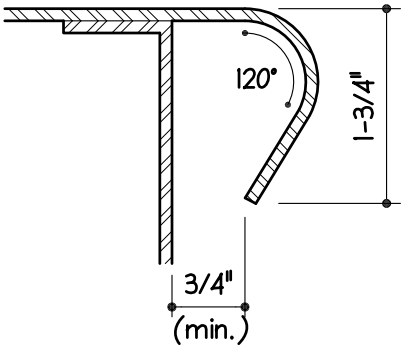

BULL NOSE ROLLED D.

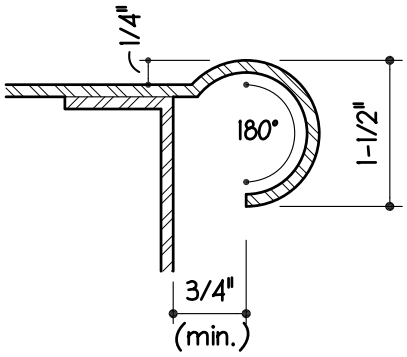

MARINE EDGE E.

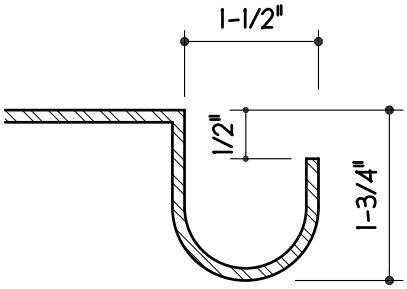

FLOUR GUTTER F.

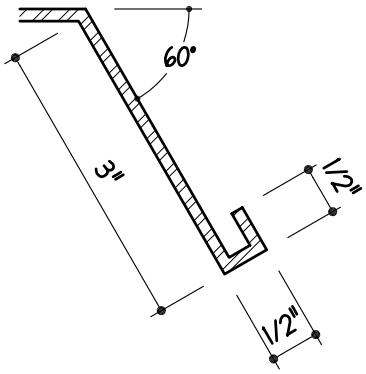

RECIPE CARD HOLDER G.

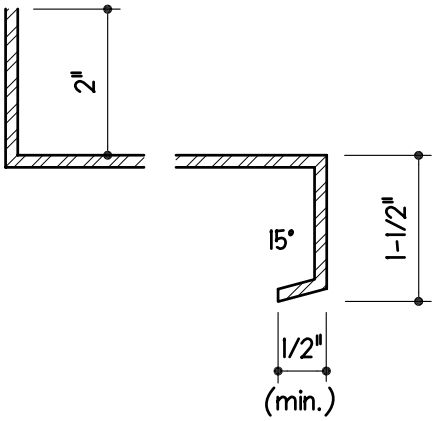

UNDERSHELF EDGE H.

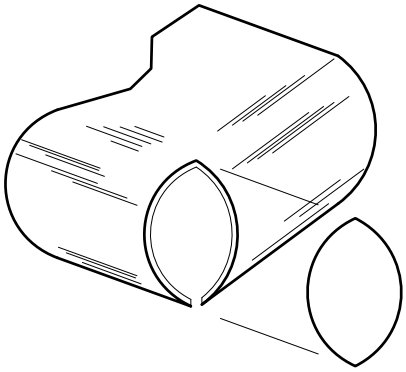

BULL NOSE CORNER I.

NYIKOS ASSOCIATES, INC. Food Facilities Design/Consulting	DESCRIPTION: EDGES	STANDARD DTL: 1.02 PAGE: 114000-41

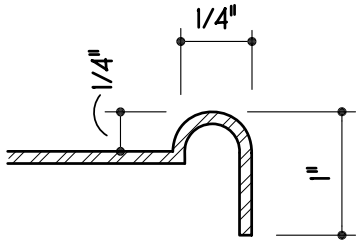

RAISED OPENING EDGE J.

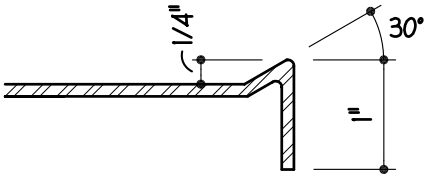

RAISED OPENING EDGE K.

a. AS SPECIFIED. TO MATCH ADJACENT ROLLED EDGES

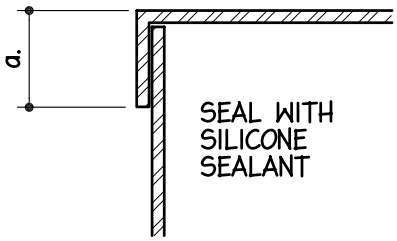

STRAIGHT TURN DOWN L.

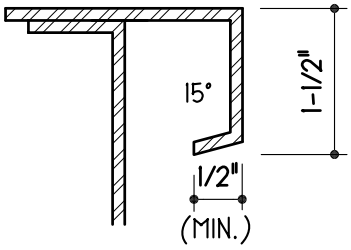

TURNED DOWN EDGE M.

NYIKOS ASSOCIATES, INC.
Food Facilities Design/Consulting

DESCRIPTION:

EDGES

STANDARD DTL: 1.02.1

PAGE: 114000-42

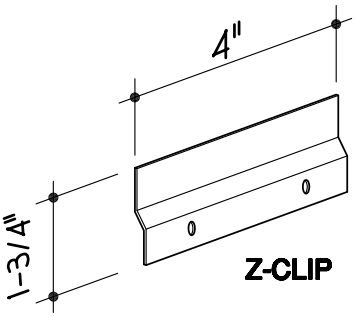

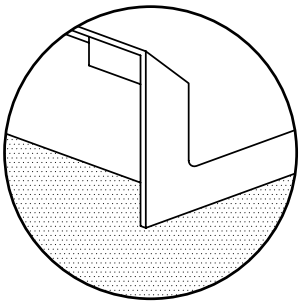

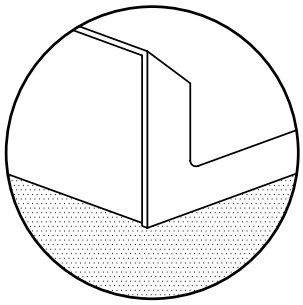

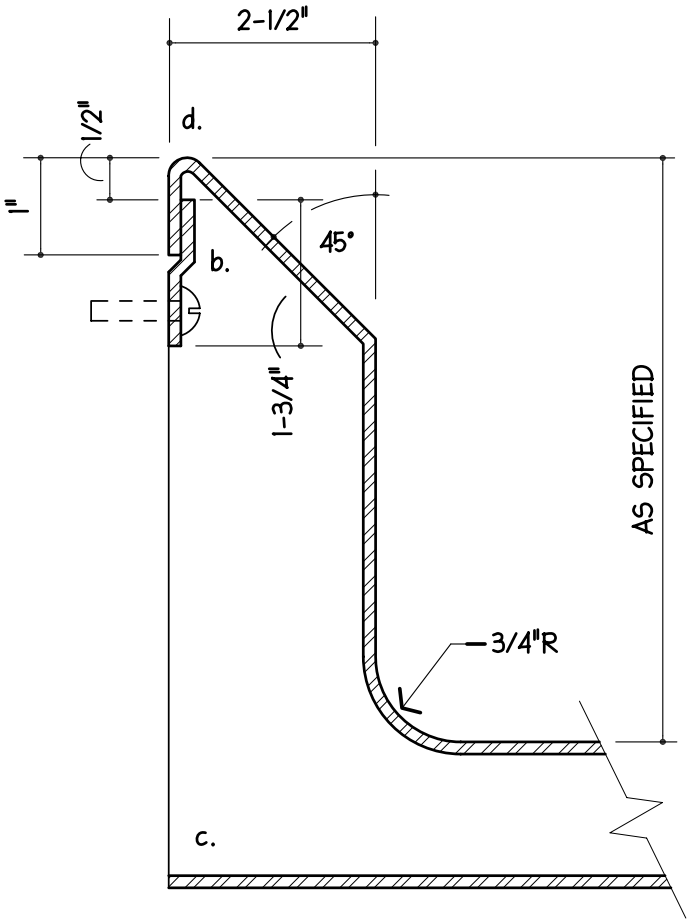

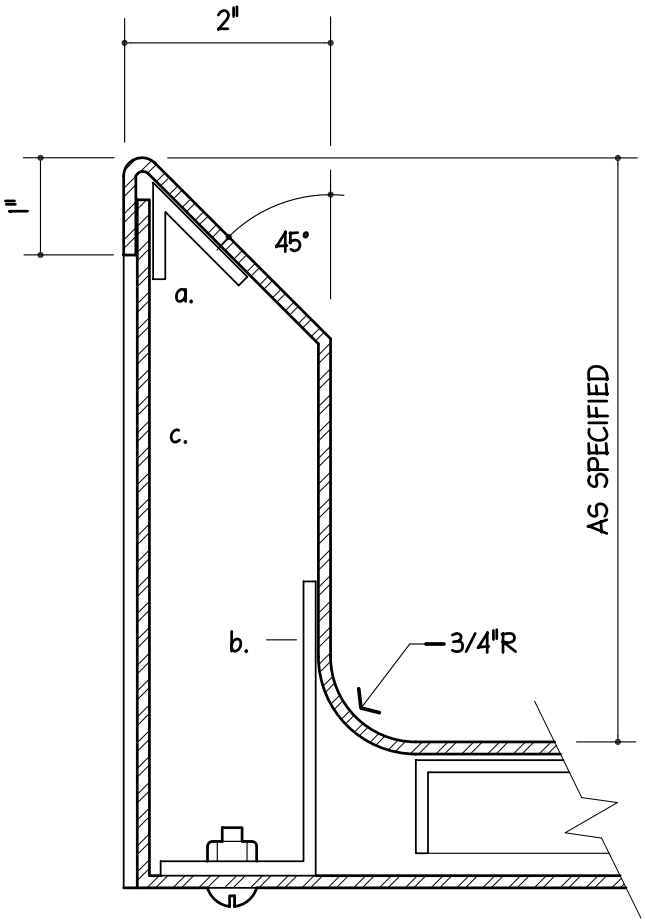

WALL UNIT

DETAIL A

a. 2-1/2" AT SINK TO ALLOW FOR CONNECTED OVERFLOW

b. 12 GA. S/S CLIPS, 4" LONG, FASTENED TO EACH WALL END OF EACH UNIT ¢ 4'-0" ON CENTER. SECURE TO WALL W/A MINIMUM OF TWO 1/4"x20 S/S TOGGLE BOLTS OR EXPANSION SHIELDS.

c. EXPOSED ENDS TO BE FULLY WELDED CLOSED.

d. SEAL ALL AROUND TO WALL WITH SILICONE SEALANT.

FREE STANDING UNIT

DETAIL B

a. 1"x1"x14 GA. S/S x1-1/2"LONG RETAINING CLIP WELDED IN PLACE. ONE AT EACH END OF UNIT AND 12" ON CENTER.

b. 2-1/2"x1-1/2x1-1/2" 14 GA.S/S CLIP WELDED TO SPLASH. ONE AT OF EACH UNIT ¢ 12" ON CENTER.

c. 14 GA S/S PANEL SECURED TO CLIPS W/ S/S OVALHEAD BOLT. WELD NUT TO CLIP.

d. EXPOSED ENDS TO BE FULLY WELDED.

NYIKOS ASSOCIATES, INC. Food Facilities Design/Consulting	DESCRIPTION: BACKSPLASHES	STANDARD DTL: 1.04 PAGE: 114000-43

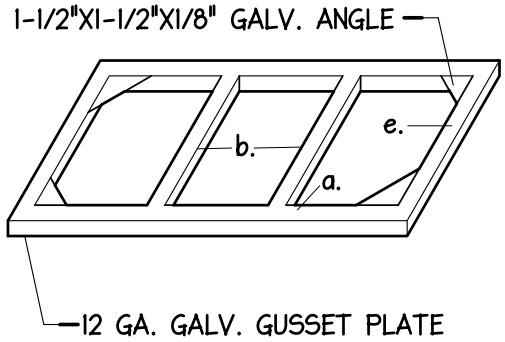

TABLES

A.

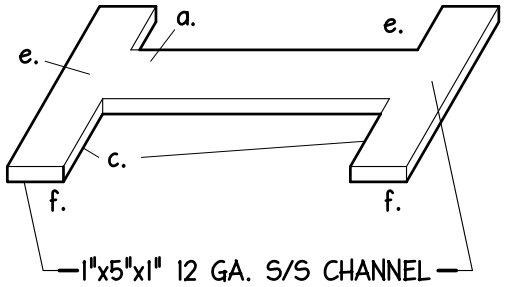

DISHTABLES

B.

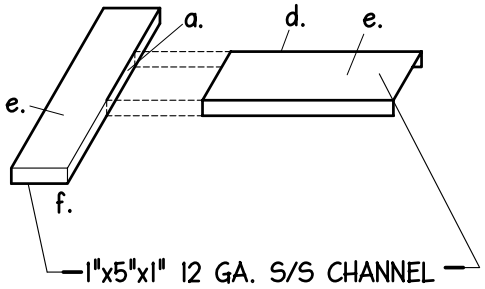

SINK DRAINBOARDS

C.

a. FULLY WELDED CONSTRUCTION.

b. ANGLE LOCATION - ENDS; SIDES OF TOP INSETS; INTERMEDIATES 24" ON CENTER.

c. CHANNEL LOCATION - ENDS AND INTERMEDIATE MAXIMUM 6'-6" O.C.

d. ADD CENTER CHANNEL WHEN DRAINBOARD LENGHT EXCEEDS 5'-6".

e. SECURE TOP TO FRAMEWORK WITH WELDED STUDS, S/S LOCKWASHERS AND CAP NUTS.

f. CLOSE CHANNEL AT FRONT ONLY.

NYIKOS ASSOCIATES, INC. Food Facilities Design/Consulting	DESCRIPTION: TABLE & DRAINBOARD FRAMEWORK	STANDARD DTL: 1.05 PAGE: 114000-44

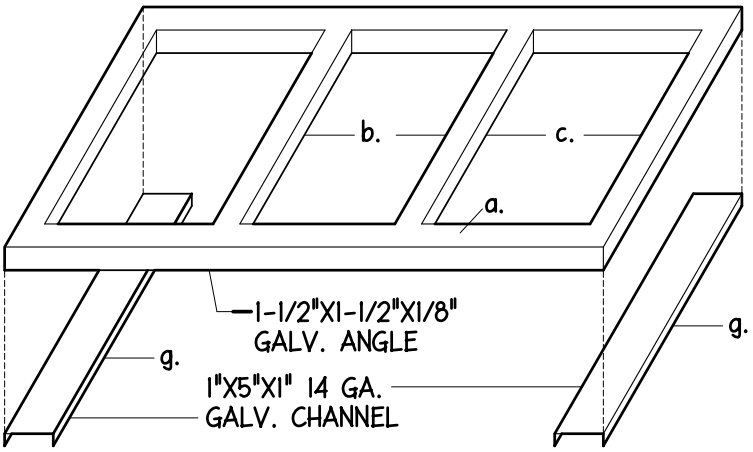

FRAME FOR STRUCTURALLY FORMED CABINET BODY

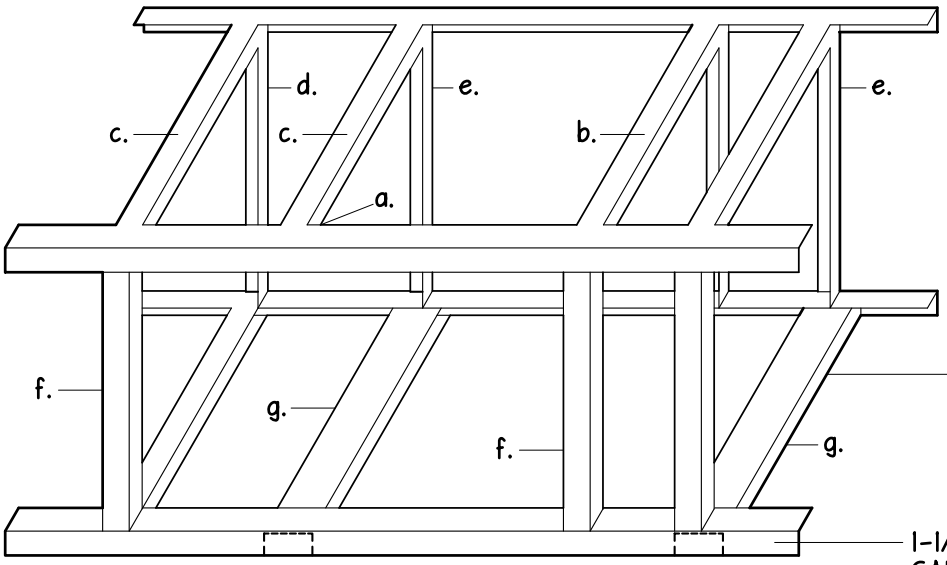

BOX FRAME FOR PANEL CABINET BODY

a. FULLY WELDED CONSTRUCTION.

b. SECURE TOP TO FRAMEWORK WITH WELDED STUDS, S/S LOCKWASHERS, AND CAP UNITS. MAXIMUM 15" ON CENTER.

c. TOP ANGLE LOCATION - ENDS; SIDES OF TOP INSETS; UNDER HEAVY EQUIPMENT LEGS; INTERMEDIATES 24" ON CENTER.

d. BACK ANGLE LOCATION - ENDS; INTERMEDIATE MAXIMUM 5'-6" ON CENTER.

e. CAFETERIA FRONT ANGLE (CHANNEL) LOCATION - ENDS; INTERMEDIATES TO CORRESPOND TO PILASTERS, SLIDE BRACKETS, PANEL SPACING, MAXIMUM 4'-0" ON CENTER. RE: STDS.-4.01 THRU 4.04.

f. WORK SIDE ANGLE LOCATION - ENDS; SIDE OF OPENINGS; INTERMEDIATES MAXIMUM 5'-6" ON CENTER.

g. BOTTOM LEG CHANNEL LOCATION - ENDS; INTERMEDIATES CORRESPOND TO FRONT PANEL SPACING; PILASTERS, SLIDE BRACKETS. MAXIMUM 5'-6" ON CENTER.

NYIKOS ASSOCIATES, INC. Food Facilities Design/Consulting	DESCRIPTION: COUNTER FRAMEWORK	STANDARD DTL: 1.06 PAGE: 114000-45

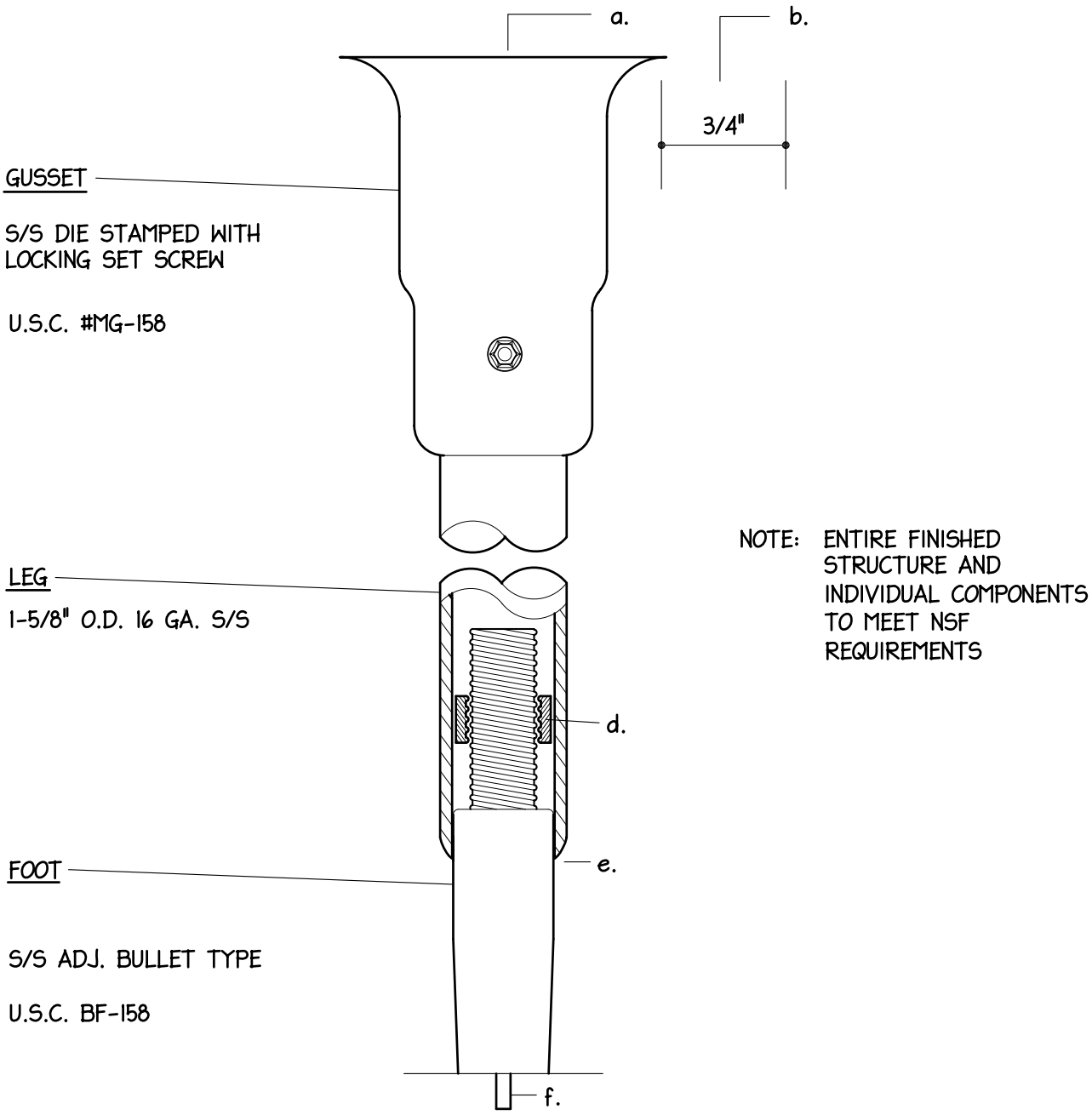

a. FULLY WELD GUSSET TO FRAMEWORK OR SINK

b. 3/4" MINIMUM CLEARANCE ALL AROUND

c. SET SCREW NOT VISIBLE TO WORKING SIDE OF EQUIPMENT.

d. MAXIMUM 1/32" CLEARANCE BETWEEN LEG AND FOOT

e. FOOT SET AT MIDPOINT TO ALLOW 1" ADJUSTMENT UP AND 1" DOWN. WITHOUT THREAD EXPOSURE.

f. LEGS UNSUPPORTED LATERALLY BY CROSSBACKING OR UNDERSHELVES SHALL BE PINNED TO FLOOR USING 1/4" DIA. X 1/2" PINS WELDED TO FOOT AND SET IN MATCHING HOLES IN THE FLOOR.

NYIKOS ASSOCIATES, INC. Food Facilities Design/Consulting	DESCRIPTION: TABLE & SINK LEGS	STANDARD DTL: 1.07 PAGE: 114000-46

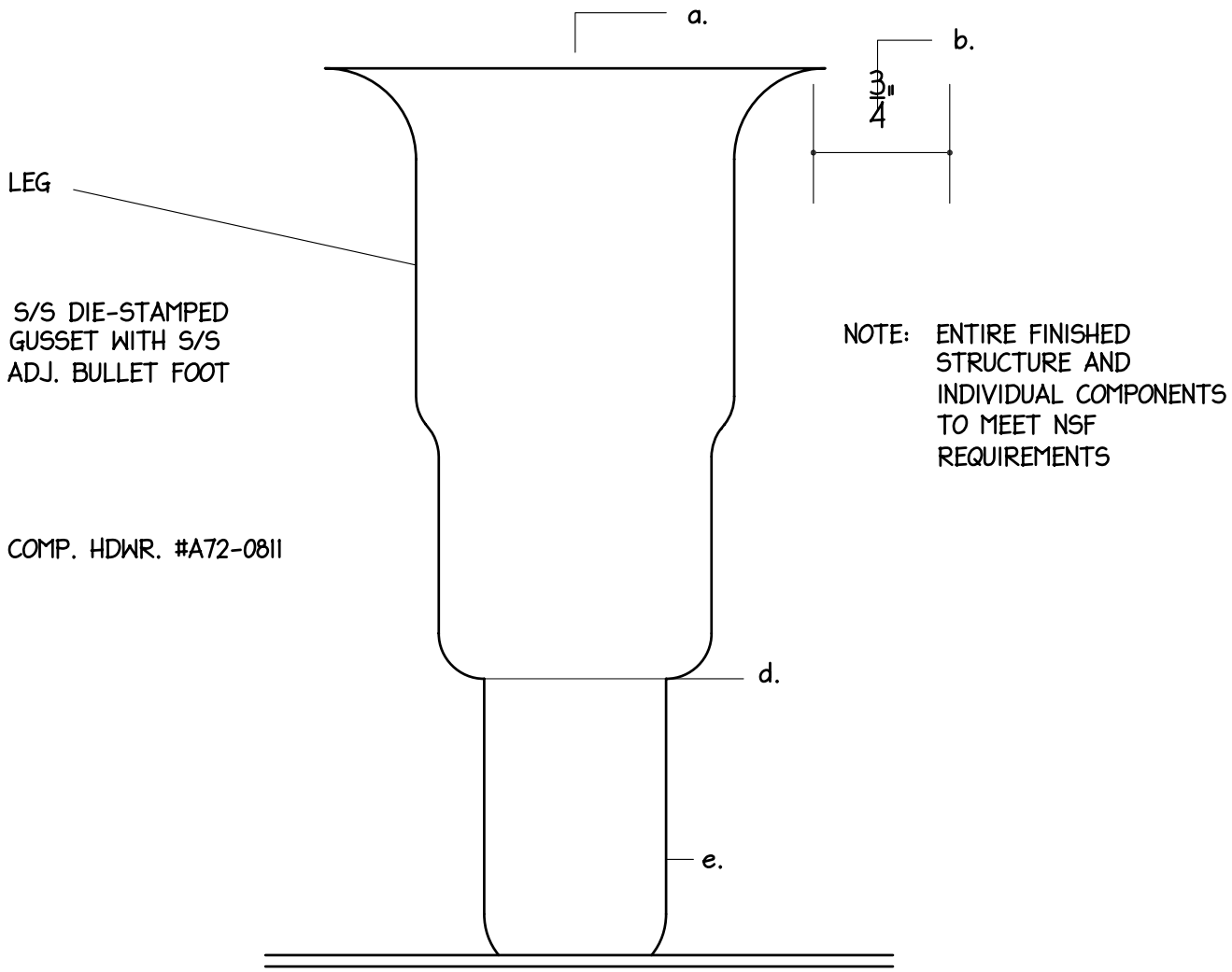

a. FULLY WELD TO FRAMEWORK CHANNEL

b. 3/4" MINIMUM CLEARANCE ALL AROUND

d. MAXIMUM 1/32" CLEARANCE BETWEEN LEG AND FOOT

e. FOOT SET AT MIDPOINT TO ALLOW 1" ADJUSTMENT UP AND 1" DOWN. WITHOUT THREAD EXPOSURE.

NYIKOS ASSOCIATES, INC. Food Facilities Design/Consulting	DESCRIPTION: COUNTER LEGS	STANDARD DTL: 1.08 PAGE: 114000-47

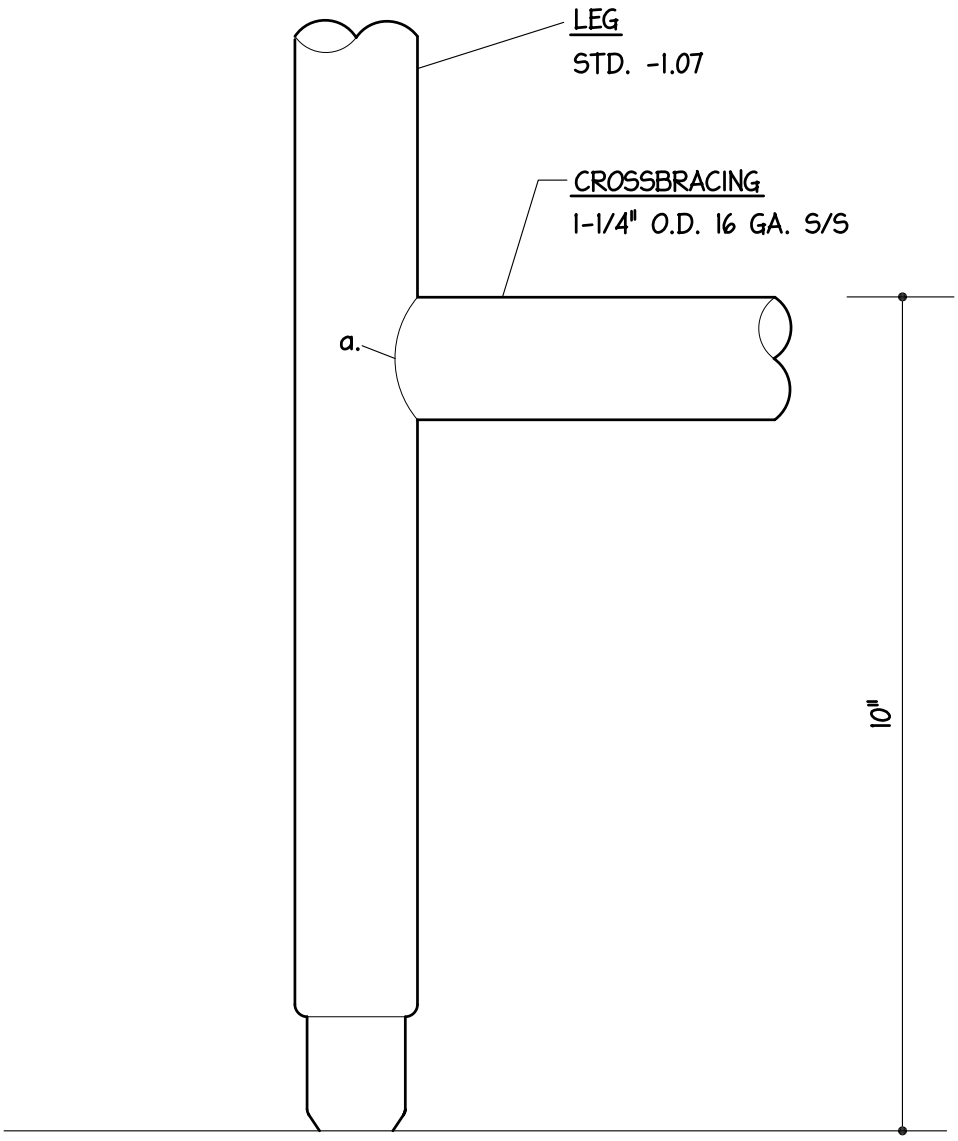

a. FULLY WELD, GRIND SMOOTH AND POLISH.

NYIKOS ASSOCIATES, INC. Food Facilities Design/Consulting	DESCRIPTION: CROSSBRACING	STANDARD DTL: 1.10 PAGE: 114000-48

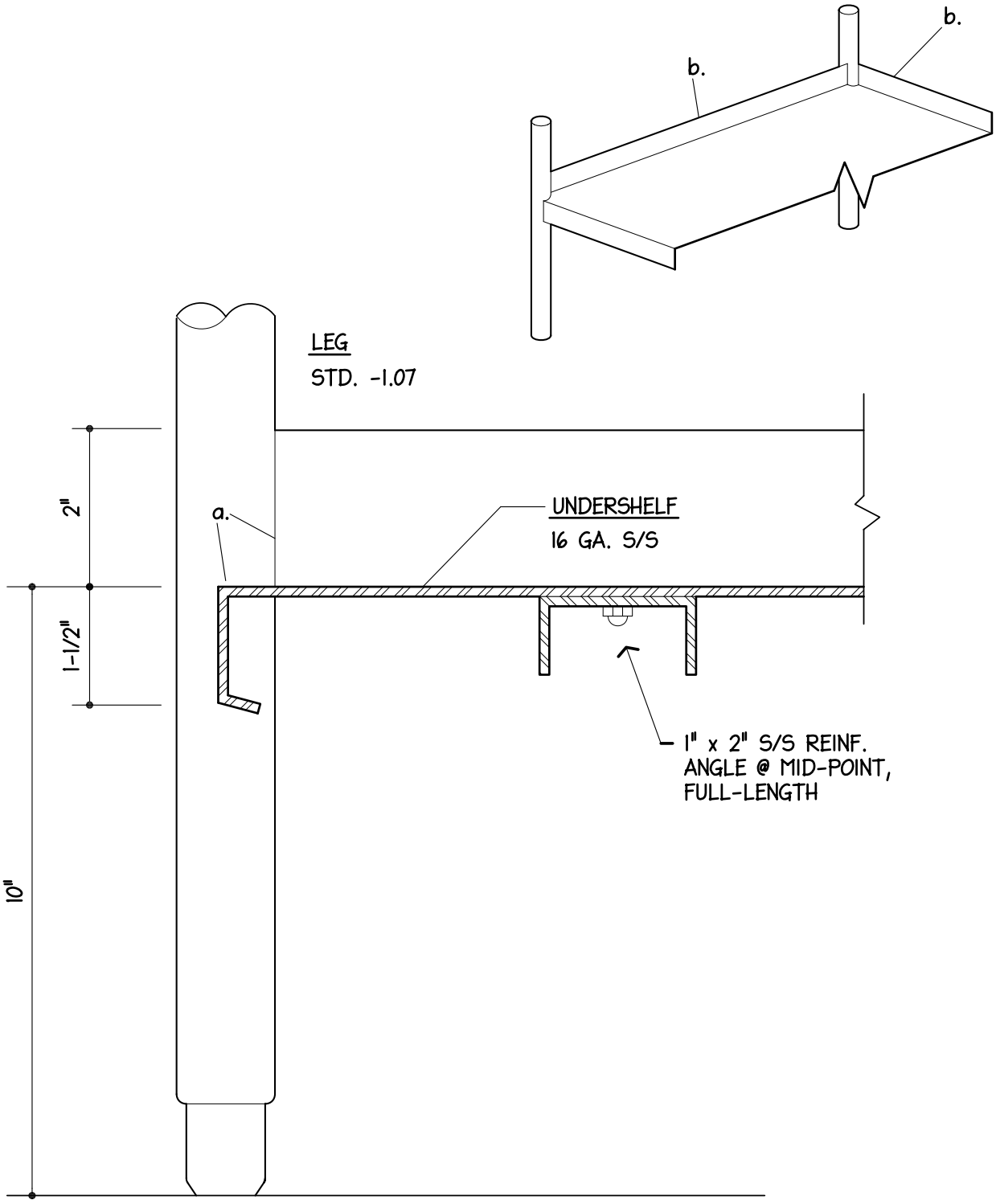

a. FULLY WELD, GRIND SMOOTH AND POLISH.

b. WHEN SPECIFIED, TURN REAR AND ENDS UP 2".

NYIKOS ASSOCIATES, INC. Food Facilities Design/Consulting	DESCRIPTION: UNDERSHELF	STANDARD DTL: 1.11
		PAGE: 114000-49

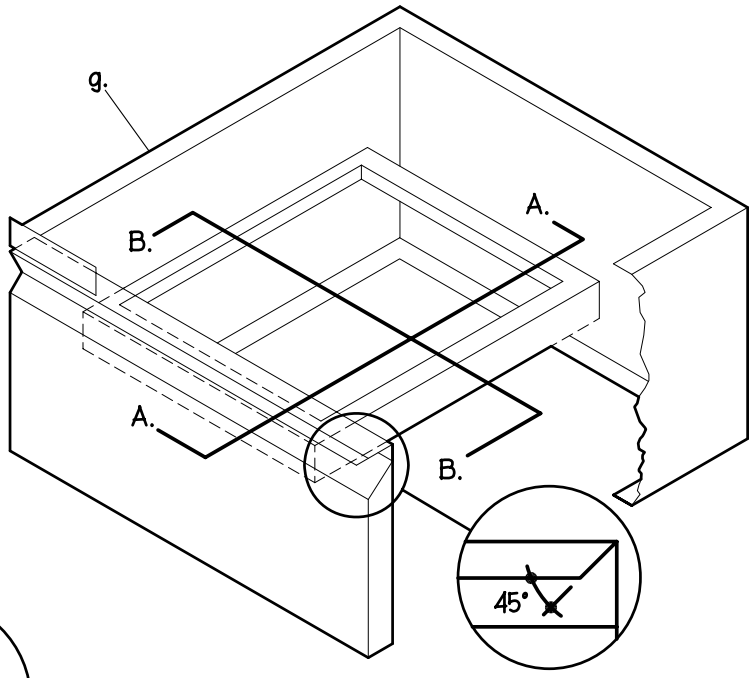

e. 16 GA. S/S ALL WELDED.

f. 3 PIECE SELF CLOSING DWR. SLIDE AS MFD. BY COMPONENT HARDWARE, S52 SERIES WITH S/S ROLLER BEARINGS. PITCH SLIDE DOWNWARD 3/8" PER FOOT FOR SELF-CLOSING ACTION.

g. 18 GA. S/S DWR. ENCLOSURE. ALL WELDED.

h. SEMI - RIGID FIBERGLASS SOUND DAMPENING.

j. HARD RUBBER DRAWER BUMPER EACH CORNER.

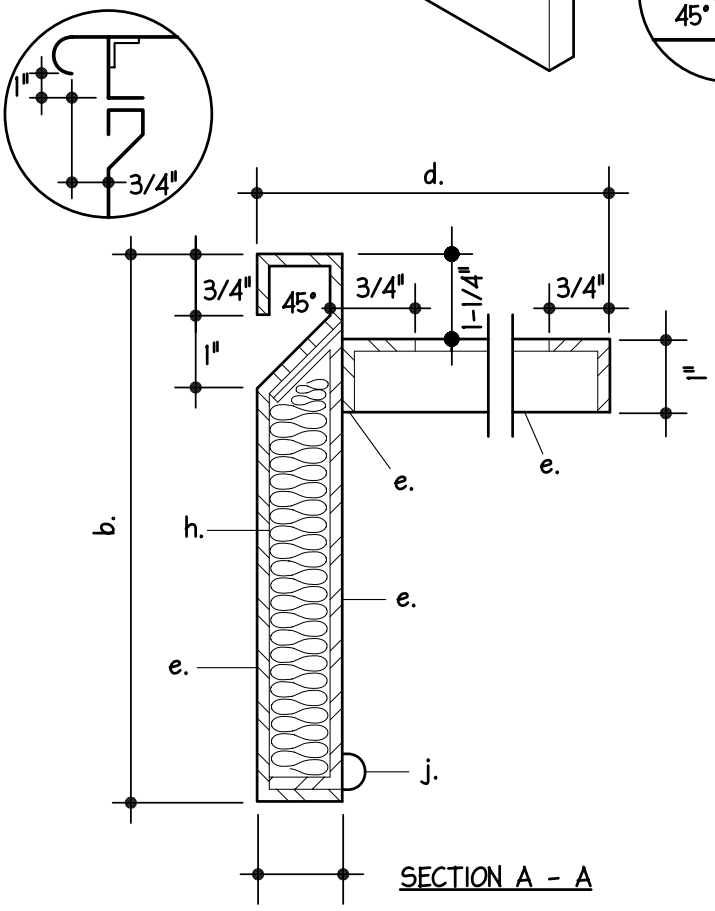

SECTION A - A

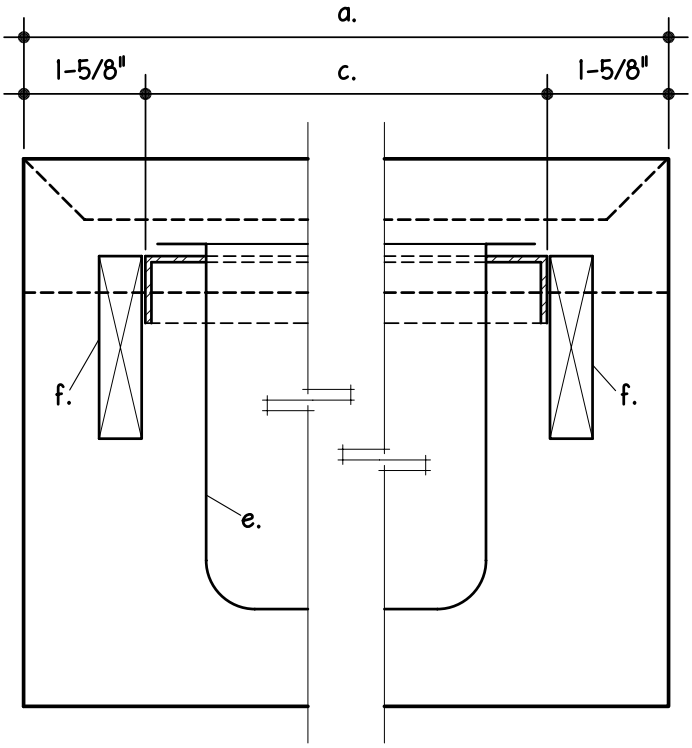

SECTION B -B

i. PROVIDE DIE - STAMPED #18 GA. S/S DWR. PANS AS FOLLOWS:

TYPE	NO.	PANS	a.	b.	c.	d.
I	1	20x20x5 DP.	25	7-1/2	21-3/4	22-3/4
II	1	20x20x8 DP.	25	10-1/2	21-3/4	22-3/4
III	1	12x20x4 DP.	25	6-1/2	21-3/4	14-1/2
IV	2	12x20x4 DP.	28	6-1/2	26-1/4	22-1/2
V	1	12x20x4 DP.	17	13-1/2	13-1/2	22-1/2

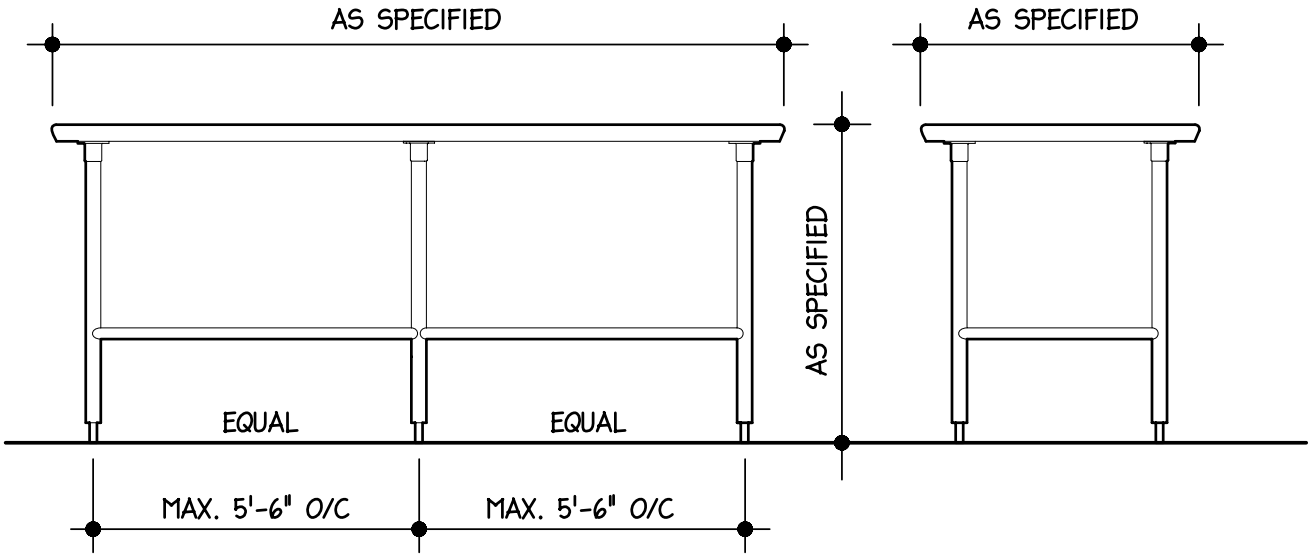

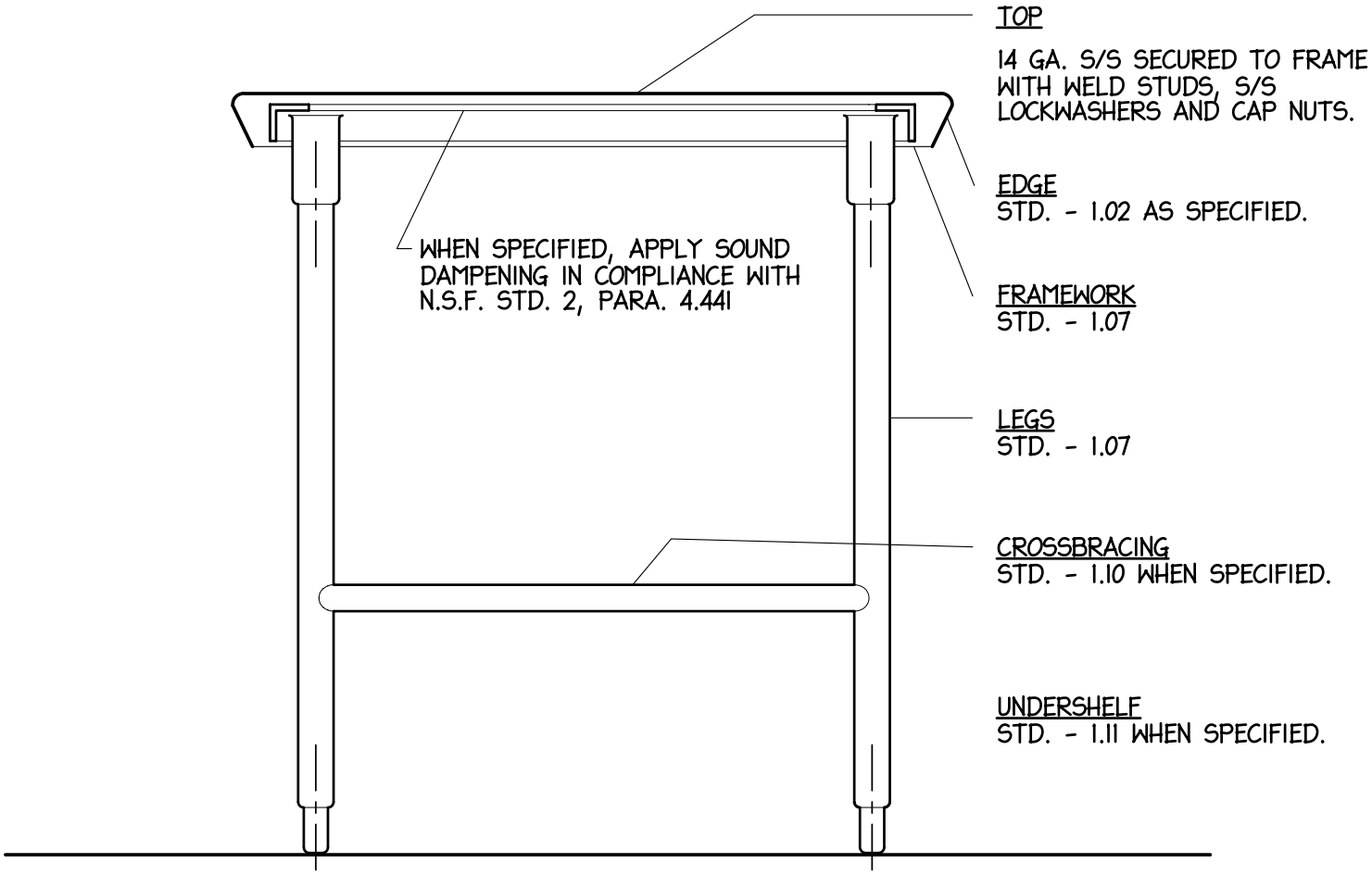

NYIKOS ASSOCIATES, INC. Food Facilities Design/Consulting	DESCRIPTION: **WORKTABLE**	STANDARD DTL: **2.01** PAGE: **114000-51**

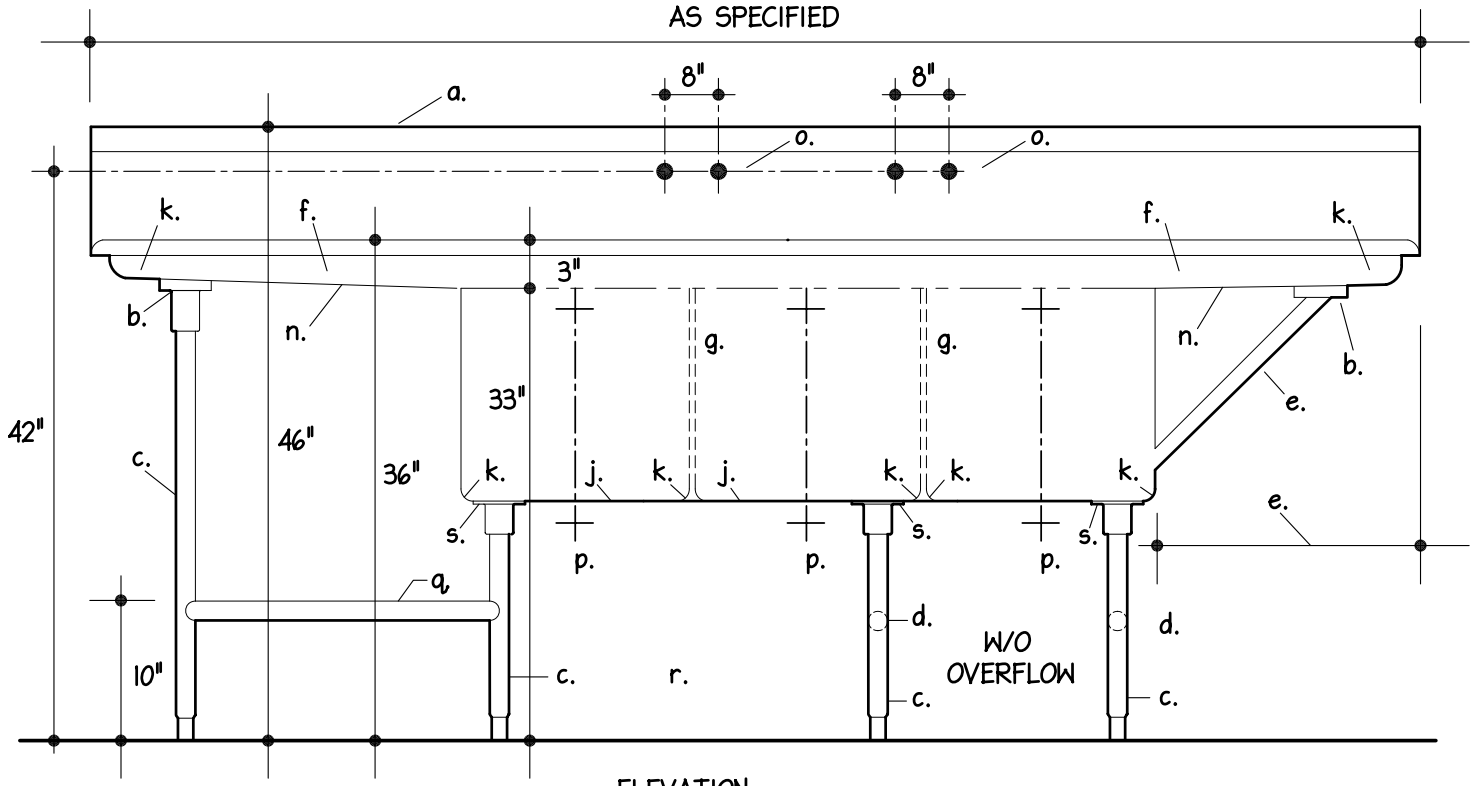

ELEVATION

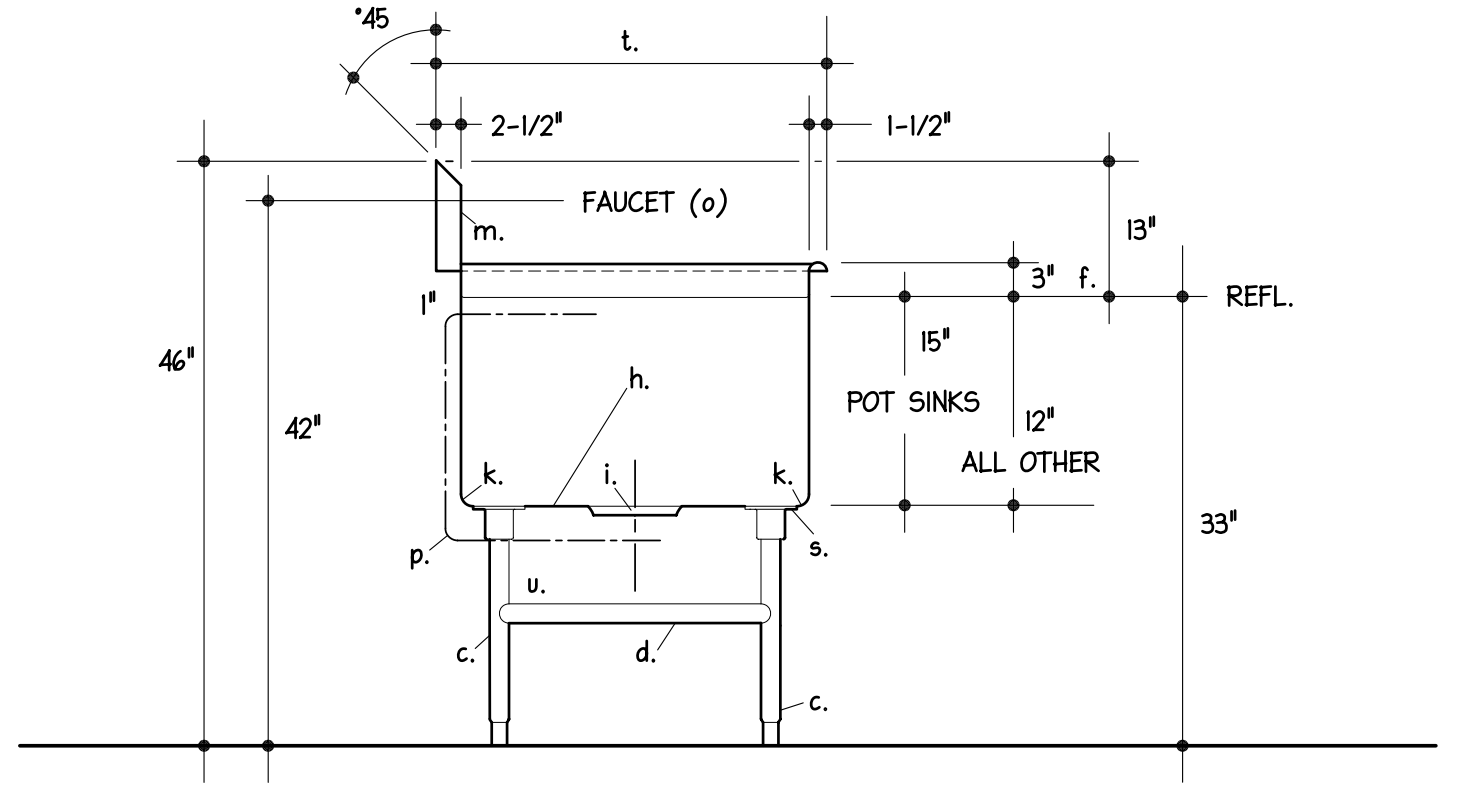

TYPICAL SECTION

a. MATERIAL - 14 GA. S/S.

b. STD. - 1.05c.

c. STD. - 1.07

d. STD. - 1.10

CONTINUED ON STD.- 3.01.1

e. DRAINBOARDS UP TO 24" IN LENGTH REQUIRE NO LEGS OR BRACES. DRAINBOARDS 25" TO 30" REQUIRE 1" O.D. 16 GA. S/S BRACE. DRAINBOARDS OVER 30" REQUIRE LEGS AND CHANNEL FRAMEWORK.

f. DRAINBOARDS SHALL PITCH TO SINK 1/8" PER FOOT OF LENGTH TO PROVIDE COMPLETE DRAINING WITHOUT POOLING. THE 3" HIGH RAISED ROLLED RIM AT THE SINK SHALL DECREASE IN HEIGHT TOWARD THE OUTER ENDS OF THE DRAINBOARD.

g. PARTITIONS BETWEEN COMPARTMENTS TO BE DOUBLE WALLED CONSTRUCTION WITH ROUNDED TOP, ALL WELDED INTEGRAL WITH SINK BODY.

h. BACK, BOTTOM, AND FRONT SHALL BE ONE CONTINUOUS PIECE WITH ENDS WELDED INTEGRAL, WITHOUT OVERLAPPING JOINTS OR OPEN SPACES, BETWEEN COMPARTMENTS.

i. WASTES SHALL BE SEATED IN DIE STAMPED DEPRESSIONS WITHOUT USE OF SOLDER, RIVETS OR WELDING. INSTALLED COMPONENTS SHALL BE FLUSH WITH SURROUNDING SURFACE.

j. EACH SINK COMPARTMENT TO BE PITCHED AND CREASED TO WASTE TO ASSURE COMPLETE DRAINING WITHOUT POOLING.

k. ENTIRE UNIT SHALL BE ALL WELDED COVE CORNERED CONSTRUCTION WITH VERTICAL AND HORIZONTAL AND INTERIOR CORNERS HAVING A 3/4" RADIUS.

l. STD.- 1.02 b EDGE.

m. STD. - 1.04a. BACKSPLASH.

n. UNDERSIDE OF DRAINBOARDS AND SINKS TO BE SPRAYED WITH SOUND DAMPENING IN COMPLIANCE WITH N.S.F. STD. 2 PARA 4.441 WHEN SPECIFIED.

o. FAUCETS - T¢S MODEL B-232 WITH AERATOR B-199, REMOVABLE MONEL SEATS AND 1/2" I.P.S. MALE INLETS.

p. WASTES - 2" NICKEL PLATED BRONZE ROTARY HANDLE WASTE S/S STRAINER PLATE WITH CHROME WITH CHROME PLATED BRASS CONNECTED OVERFLOW, STANDARD- KIEL HARDWARE MFG. CO. #1770-1015-1000.

q, REAR CROSS BRACING ONLY.

r. OMIT FRONT AND REAR LENGTHWISE CROSSBRACIG UNDER SINKS.

s. 12 GAUGE STAINLESS STEEL 6"x 6" TRIANGULAR SUPPORT PLATE WELDED TO UNDERSIDE OF SINKS.

t. WIDTH AS SPECIFIED.

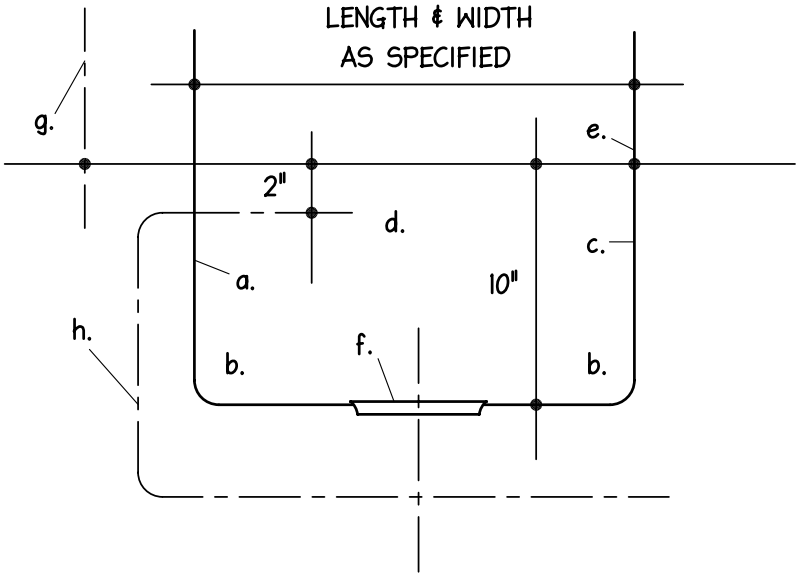

TYPICAL SECTION

a. MATERIAL - 14 GA. S/S

b. ENTIRE UNIT SHALL BE ALL WELDED COVE CORNERED CONSTRUCTION WITH VERTICAL AND HORIZONTAL AND INTERIOR CORNERS HAVING A 3/4" RADIUS.

c. TWO SIDES AND BOTTOM SHELL BE ONE CONTINUOUS PIECE WITH ENDS WELDED INTEGRAL WITHOUT OVERLAPPING JOINTS.

d. PARTITIONS BETWEEN COMPARTMENTS TO BE DOUBLE WALLED CONSTRUCTION WITH ROUNDED TOP, ALL WELDED INTEGRAL WITH SINK.

e. FULLY WELD SINK TO TOP WITHOUT OVERLAPPING JOINTS.

f. WASTES SHALL BE SEATED IN DIE STAMPED DEPRESSIONS WITHOUT USE OF SOLDER RIVETS OR WELDING . INSTALLED COMPONENTS SHALL BE FLUSH WITH SURROUNDING SURFACE.

g. FAUCET - T¢S MODEL B-222 FAUCET WITH B-199 AERATOR, REMOVABLE MONEL SEATS AND 1/2" IPS MALE INLETS.

h. WASTES - 1-1/2" NICKEL PLATED BRONZE ROTARY HANDLE WASTE AND S/S STRAINER PLATE WITH CHROME PLATED BRASS CONNECTED OVERFLOW, STANDARD-KEIL HARDWARE COMPANY NO. #1770-1015-1000.

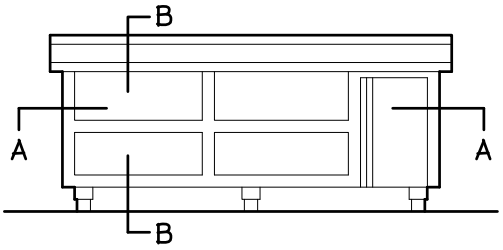

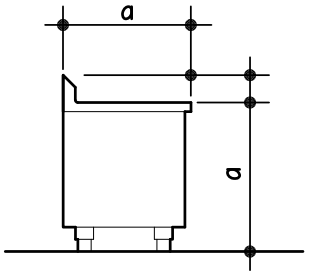

a. AS SPECIFIED

b. SEAL WITH SILICONE SEALANT

c. TIGHT JOINT. CLOSED BOTTOM.

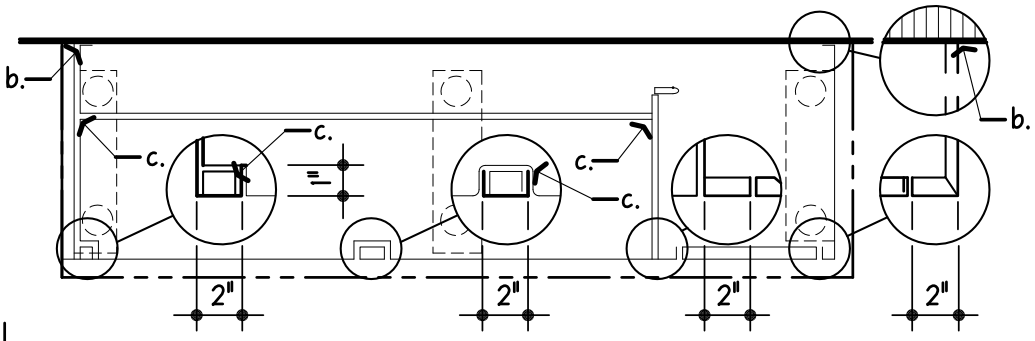

NOTE!:
POP RIVETS & EXPOSED STUDS & CAP NUTS NOT ACCEPTABLE.

SECTION A-A

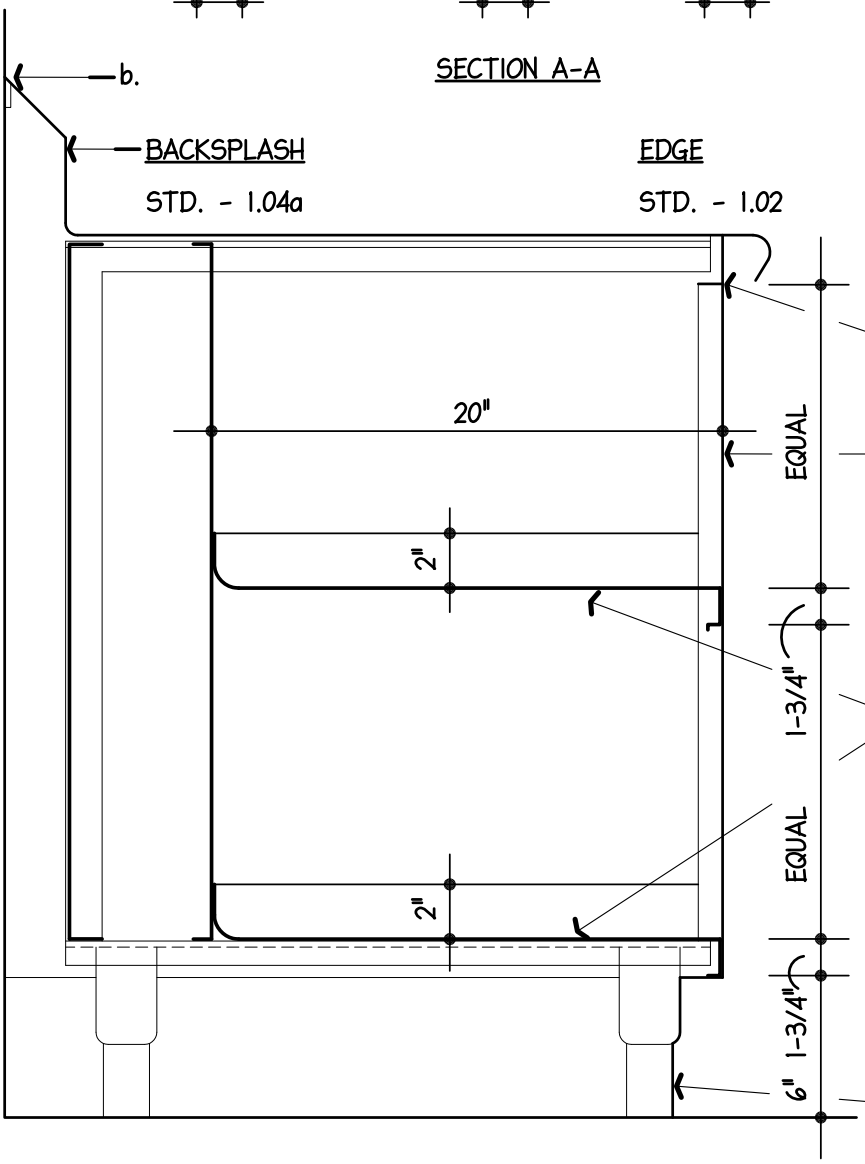

SECTION B-B

TOP

14 GA. S/S SECURED TO FRAMEWORK WITH WELDED STUDS, S/S L.W. AND CAP NUTS.

FRAMEWORK

STD. - 1.06

BODY

18 GA. S/S WITH INTEGRALLY FORMED STRUCTURAL ANGLES AND CHANNELS TACK WELDED.

SHELVES

16 GA. S/S SECURED TO LINER WITH TACK WELLS 1/2" LONG, 12" O/C.

DOOR

STD. - 4.25
- 4.26
- 4.27
- 4.28

LEGS

STD. - 1.08

NYIKOS ASSOCIATES, INC. Food Facilities Design/Consulting	DESCRIPTION: BACK COUNTER	STANDARD DTL: 4.01 PAGE: 114000-55

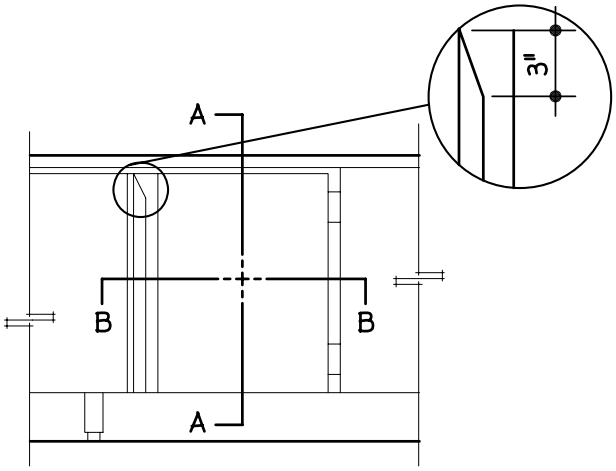

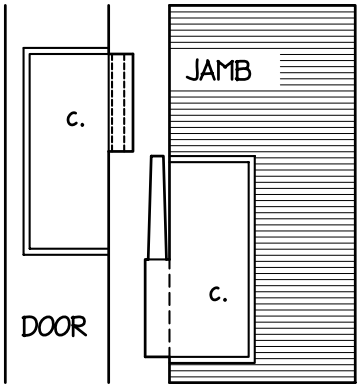

HINGE DETAIL

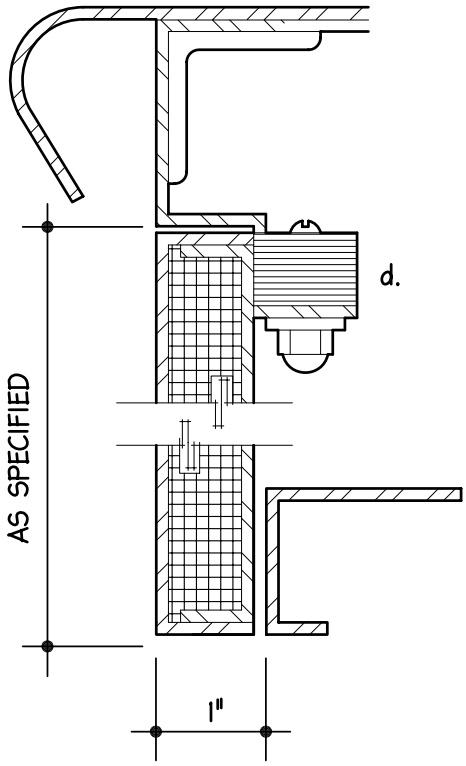

SECTION A-A

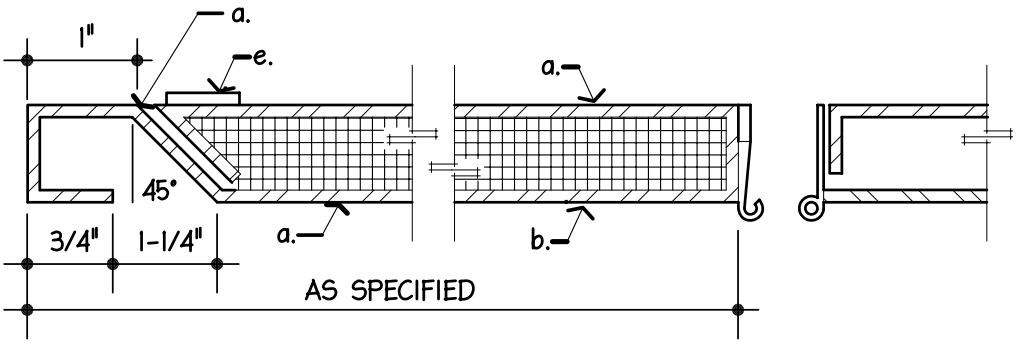

SECTION B-B

a. PANELING - 18 GA. S/S GA. EXTERIOR AND INTERIOR PANS TACK WELDED.

b. SEMI-RIGID FIBERGLASS SOUND DAMPENING.

c. HEAVY-DUTY S/S CLIP JOINT HINGE AS MFD. BY STANDARD-KEIL. SET IN FLUSH WITH SURFACE OF DOOR AND JAMB AND WELDED IN PLACE.

d. STANDARD-KEIL #2932-1010-3000 MAGNETIC CATCH MOUNTED FLUSH IN CUT OUT ON 1" TURN DOWN.

e. STEEL PLATE FOR MAGNETIC CATCH TACK WELDED TO INTERIOR DOOR PAN.

(END OF SECTION 114000)