Project Manual

Conformed Set

William F. Cooke, Jr. Elementary School

Hockessin, Delaware

Volume III

BECKER MORGAN GROUP, INC.

BECKER MORGAN GROUP

ARCHITECTURE ENGINEERING

Red Clay Consolidated School District

2012080.00
September 9, 2013

TABLE OF CONTENTS

VOLUME I

CD	TITLE PAGE/ CONSULTANT DIRECTORY
000110	TABLE OF CONTENTS
000115	LIST OF DRAWINGS

DIVISION 00 – CONTRACT REQUIREMENTS

001100	ADVERTISEMENT FOR BIDS
001110	INVITATION TO BID
002113	INSTRUCTIONS TO BIDDERS
003132	GEOTECHNICAL REPORTS
	GEOTECHNICAL REPORT BY HILLIS-CARNES ENGINEERING (March 12, 2013)
	ADDITIONAL HAND AUGER BORING REPORT BY HILLIS-CARNES ENGINEERING (Date…….)
	PAVEMENT CORING REPORT BY HILLIS-CARNES ENGINEERING (Date…….)
004000	BID FORM
004300	BID BOND
004320	SUBCONTRACTOR APPROVAL
004350	LISTING OF SUBCONTRACTORS
005200	AGREEMENT BETWEEN OWNER AND CONSTRUCTION MANAGER (AIA A132-2009 Edition)
005413	SUPPLEMENT TO AGREEMENT BETWEEN OWNER AND CONTRACTOR
006113	PERFORMANCE BOND
006100	PAYMENT BOND
006200	APPLICATION AND CERTIFICATE FOR PAYMENT (AIA G732-2009 Edition)
006250	CONTINUATION SHEET (AIA G703-1992 Edition)
007000	GENERAL CONDITIONS TO THE CONTRACT FOR CONSTRUCTION (AIA Document A232-2009 Edition)
007300	SUPPLEMENTARY GENERAL CONDITIONS TO THE CONTRACT
007350	GENERAL REQUIREMENTS
007400	DELAWARE PREVAILING WAGE RATES
	DELAWARE PREVAILING WAGE RATES REPORTING FORM
	DELAWARE PREVAILING WAGE RATES-CERTIFIED BUILDING RATES 2013

DIVISION 01 - GENERAL REQUIREMENTS

011000	SUMMARY
011200	SUMMARY OF CONTRACTS / SCOPES OF WORK
012300	ALTERNATES
012500	CONTRACT MODIFICATION PROCEDURES
012550	SUBSTITUTION PROCEDURES
012650	CHANGE ORDER REQUEST SUBMISSION FORMAT
012900	PAYMENT PROCEDURES
013100	PROJECT MANAGEMENT AND COORDINATION
013110	PROJECT COORDINATION
013200	CONSTRUCTION PROGRESS DOCUMENTATION
013210	CONSTRUCTION SCHEDULE
013500	SPECIAL PROJECT PROCEDURES
013520	SAFETY REQUIREMENTS AND LOSS CONTROL
013300	SUBMITTAL PROCEDURES
014000	QUALITY REQUIREMENTS
014200	REFERENCES
015000	TEMPORARY FACILITIES AND CONTROLS

016000 PRODUCT REQUIREMENTS
017300 EXECUTION
017700 CLOSEOUT PROCEDURES
017750 CLOSEOUT REQUIREMENTS
CONTRACTOR'S AFFIDAVIT OF PAYMENT OF DEBTS AND CLAIMS (AIA Document G706-1994 Edition)
CONTRACTOR'S AFFIDAVIT OF RELEASE OF LIENS (AIA Document G706A-1994 Edition)
CONSENT OF SURETY TO FINAL PAYMENT (AIA Document G707-1994 Edition)
017823 OPERATION AND MAINTENANCE DATA
017839 PROJECT RECORD DOCUMENTS
017900 DEMONSTRATION & TRAINING
018000 RELEASE OF ELECTRONIC MEDIA

VOLUME II

DIVISION 02 - EXISTING CONDITIONS

NA

DIVISION 03 - CONCRETE

033000 CAST-IN-PLACE CONCRETE

DIVISION 04 - MASONRY

042000 UNIT MASONRY
047000 ARCHITECTURAL STONE VENEER
047200 CAST STONE MASONRY
047300 CAST STONE CONCRETE MASONRY VENEER

DIVISION 05 - METALS

051200 STRUCTURAL STEEL FRAMING
051213 ARCHITECTURALLY EXPOSED STRUCTURAL STEEL FRAMING
052100 STEEL JOIST FRAMING
053100 STEEL DECKING
054000 COLD-FORMED METAL FRAMING
055000 METAL FABRICATIONS
055113 METAL STAIRS
055213 PIPE AND TUBE RAILINGS

DIVISION 06 - WOOD, PLASTICS AND COMPOSITES

061000 ROUGH CARPENTRY
061600 SHEATHING
064023 INTERIOR ARCHITECTURAL WOODWORK

DIVISION 07 - THERMAL AND MOISTURE PROTECTION

071113 BITUMINOUS DAMPPROOFING
071326 SELF-ADHERING SHEET WATERPROOFING
072100 THERMAL INSULATION
072110 INSULATING AIR BARRIER SYSTEM
074113 STANDING SEAM ROOF PANELS
074213 METAL WALL PANELS
075323 ETHYLENE-PROPYLENE-DIENE-MONOMER (EPDM) ROOFING
076200 FLASHING AND SHEET METAL
077200 ROOF ACCESSORIES

078413 PENETRATION FIRESTOPPING
079200 JOINT SEALANTS
079500 EXPANSION CONTROL

DIVISION 08 - OPENINGS

081113 HOLLOW METAL DOORS AND FRAMES
081416 FLUSH WOOD DOORS
083113 ACCESS DOORS AND FRAMES
083323 OVERHEAD COILING DOORS
083326 OVERHEAD COILING GRILLES
084113 ALUMINUM FRAMED ENTRANCES AND STOREFRONTS
084413 GLAZED ALUMINUM CURTAIN WALLS
084510 TRANSLUCENT WALL ASSEMBLIES
087100 DOOR HARDWARE
088000 GLAZING
088113 DECORATIVE GLASS GLAZING
089119 LOUVERS

DIVISION 09 – FINISHES

092216 NON-STRUCTURAL METAL FRAMING
092900 GYPSUM BOARD
093000 TILING
095113 ACOUSTICAL PANEL CEILINGS
096513 RESILIENT BASE AND ACCESSORIES
096516 RESILIENT SHEET FLOORING
096519 RESILIENT TILE FLOORING
096566 RESILIENT ATHLETIC FLOORING
096623 RESINOUS MATRIX TERRAZZO FLOORING
096723 RESINOUS FLOORING
096815 CARPET
098413 FABRIC-WRAPPED ACOUSTICAL PANELS
098430 WOOD VENEER WALL PANELS
099113 EXTERIOR PAINTING
099123 INTERIOR PAINTING
099600 HIGH PERFORMANCE COATINGS

DIVISION 10 - SPECIALTIES

101100 VISUAL DISPLAY UNITS
101200 DISPLAY CASES
101400 SIGNAGE
102113 TOILET COMPARTMENTS
102123 CUBICLE CURTAINS AND TRACK
102239 FOLDING PANEL PARTITIONS
102800 TOILET, BATH AND LAUNDRY ACCESSORIES
104161 SITE LED SIGNS
104200 PLAQUES
104413 FIRE EXTINGUISHER AND DEFIBRILLATOR CABINETS
104416 FIRE EXTINGUISHERS
105113 METAL LOCKERS
105613 METAL STORAGE SHELVING
107316 PRE-FABRICATED CANOPY SYSTEMS
107500 FLAGPOLES

DIVISION 11 - EQUIPMENT

113100 RESIDENTIAL APPLIANCES

114000 FOOD SERVICE EQUIPMENT
116143 STAGE CURTAINS
116623 GYMNASIUM EQUIPMENT

DIVISION 12 - FURNISHINGS

122413 ROLLER WINDOW SHADES
123200 MANUFACTURED WOOD CASEWORK
123280 MEDIA SHELVING AND CASEWORK
129300 SITE FURNISHINGS

DIVISION 13 - SPECIAL CONSTRUCTION

N/A

DIVISION 14 – CONVEYING EQUIPMENT

142400 HYDRAULIC ELEVATORS

VOLUME III

DIVISION 21 - FIRE PROTECTION

210500 COMMON WORK RESULTS FOR FIRE SUPPRESSION
210513 MOTOR REQUIREMENTS FOR FIRE SUPPRESSION EQUIPMENT
210548 VIBRATION AND SEISMIC CONTROLS FOR EQUIPMENT
210553 IDENTIFICATION FOR FIRE SUPPRESSION PIPING AND EQUIPMENT
211200 FIRE SUPPRESSION STANDPIPES
211300 FIRE SUPPRESSTION SPRINKLER SYSTEMS

DIVISION 22 - PLUMBING

220516 EXPANSION FITTINGS AND LOOPS FOR PLUMBING PIPING
220519 METERS AND GAGES FOR PLUMBING PIPING
220553 IDENTIFICATIION FOR PLUMBING PIPING AND EQUIPMENT
220716 PLUMBING EQUIPMENT INSULATION
220719 PLUMBING PIPING INSULATION
221005 PLUMBING PIPING
221006 PLUMBING PIPING SPECIALTIES
221113 FACILITY WATER DISTRIBUTION PIPING
221313 FACILITY SANITARY SEWERS
223000 PLUMBING EQUIPMENT
224000 PLUMBING FIXTURES

DIVISION 23 - HVAC

230513 MOTOR REQUIREMENTS FOR HVAC AND PLUMBING EQUIPMENT
230516 EXPANSION FITTINGS AND LOOPS FOR HVAC PIPING
230519 METERS AND GAGES FOR HVAC PIPING
230548 VIBRATION AND SEISMIC EQUIPMENT
230553 IDENTIFICATION FOR HVAC PIPING AND EQUIPMENT
230593 TESTING, ADJUSTING, AND BALANCING FOR HVAC
230713 DUCT INSULATION
230716 HVAC EQUIPMENT INSULATION
230719 HVAC PIPING INSULATION
230800 COMMISSIONING OF HVAC
230913 INSTRUMENTATION AND CONTROL DEVICES FOR HVAC
230923 DIRECT DIGITAL CONTROL SYSTEM FOR HVAC

230993	SEQUENCE OF OPERATIONS FOR HVAC CONTROLS
232300	REFRIGERANT PIPING
233100	HVAC DUCTS AND CASINGS
233300	AIR DUCT ACCESSORIES
233423	HVAC POWER VENTILATORS
233700	AIR OUTLETS AND INLETS
237223	PACKAGED AIR-TO-AIR ENERGY RECOVERY UNITS
237413	PACKAGED OUTDOOR CENTRAL STATION AIR HANDLING UNITS
238127	SMALL SPLIT SYSTEM HEATING AND COOLING
238129	VARIABLE REFRIGERANT VOLUME (VRV) HVAC SYSTEM

DIVISION 26 - ELECTRICAL

260519	LOW VOLTAGE ELECTRICAL POWER CONDUCTORS AND CABLES (600V AND LESS)
260526	GROUNDING AND BONDING FOR ELECTRICAL SYSTEMS
260529	HANGERS AND SUPPORTS FOR ELECTRICAL SYSTEMS
260534	CONDUIT
260535	SURFACE RACEWAYS
260537	BOXES
260553	IDENTIFICATION FOR ELECTRICAL SYSTEMS
260573	OVERCURRENT PROTECTIVE DEVICE COORDINATION STUDY
260919	ENCLOSED CONTACTORS
262200	LOW VOLTAGE TRANSFORMERS
262413	SWITCHBOARDS
262416	PANELBOARDS
262701	ELECTRICAL SERVICE ENTRANCE
262717	EQUIPMENT WIRING
262726	WIRING DEVICES
262813	FUSES
262817	ENCLOSED CIRCUIT BREAKERS
262818	ENCLOSED SWITCHES
263213	ENGINE GENERATORS
263600	TRANSFER SWITCHES
265100	INTERIOR LIGHTING
265600	EXTERIOR LIGHTING

DIVISION 27 - COMMUNICATION

271000	STRUCTURED CABLING
274116	INTEGRATED AUDIO-VIDEO SYSTEMS AND EQUIPMENT FOR CLASSROOMS
275117	PUBLIC ADDRESS SYSTEM

DIVISION 28 - ELECTRONIC SAFETY AND SECURITY

283100	FIRE DETECTION AND ALARM

DIVISION 31 - EARTHWORK

311000	SITE CLEARING
312000	EARTH MOVING
312319	DEWATERING
315000	EXCAVATION SUPPORT AND PROTECTION

DIVISION 32 - EXTERIOR IMPROVEMENTS

321216	ASPHALT PAVING
321313	CONCRETE PAVING
323116	WELDED WIRE FENCES AND GATES
329100	TURF AND GRASSES

DIVISION 33 - UTILITIES

330500 COMMON WORK RESULTS FOR UTILITIES
334100 STORM UTILITY DRAINAGE PIPING

END OF TABLE OF CONTENTS

SECTION 21 05 00

COMMON WORK RESULTS FOR FIRE SUPPRESSION

PART 1 GENERAL

1.01 SECTION INCLUDES

A. Pipe, fittings, valves, and connections for sprinkler, standpipe and fire hose, and combination sprinkler and standpipe systems.

1.02 RELATED REQUIREMENTS

A. Section 09 90 00 - Painting and Coating: Preparation and painting of fire protection piping systems.

B. Section 21 05 53 - Identification for Fire Suppression Piping and Equipment: Piping identification.

C. Section 22 05 53 - Identification for Plumbing Piping and Equipment: Piping identification.

D. Section 21 13 00 - Fire-Suppression Sprinkler Systems: Sprinkler systems design.

E. Section 21 12 00 - Fire-Suppression Standpipes: Standpipe design.

1.03 REFERENCE STANDARDS

A. ASME (BPV IX) - Boiler and Pressure Vessel Code, Section IX - Welding and Brazing Qualifications; The American Society of Mechanical Engineers.

B. ASME B16.1 - Gray Iron Pipe Flanges and Flanged Fittings: Classes 25, 125, and 250; The American Society of Mechanical Engineers.

C. ASME B16.3 - Malleable Iron Threaded Fittings; The American Society of Mechanical Engineers.

D. ASME B16.4 - Gray Iron Threaded Fittings; The American Society of Mechanical Engineers.

E. ASME B16.5 - Pipe Flanges and Flanged Fittings; The American Society of Mechanical Engineers (ANSI/ASME B16.5).

F. ASME B16.9 - Factory-made Wrought Steel Buttwelding Fittings; The American Society of Mechanical Engineers.

G. ASME B16.11 - Forged Steel Fittings, Socket-welding and Threaded; The American Society of Mechanical Engineers.

H. ASME B16.18 - Cast Copper Alloy Solder Joint Pressure Fittings; The American Society of Mechanical Engineers (ANSI B16.18).

I. ASME B16.22 - Wrought Copper and Copper Alloy Solder Joint Pressure Fittings; The American Society of Mechanical Engineers.

J. ASME B16.25 - Buttwelding Ends; The American Society of Mechanical Engineers.

K. ASME B36.10M - Welded and Seamless Wrought Steel Pipe; The American Society of Mechanical Engineers.

L. ASTM A47/A47M - Standard Specification for Ferritic Malleable Iron Castings.

M. ASTM A53/A53M - Standard Specification for Pipe, Steel, Black and Hot-Dipped, Zinc-Coated, Welded and Seamless.

N. ASTM A135/A135M - Standard Specification for Electric-Resistance Welded Steel Pipe.

O. ASTM A234/A234M - Standard Specification for Piping Fittings of Wrought Carbon Steel and Alloy Steel for Moderate and High Temperature Service.

P. ASTM A536 - Standard Specification for Ductile Iron Castings.

Q. ASTM A795/A795M - Standard Specification for Black and Hot-Dipped Zinc-Coated (Galvanized) Welded and Seamless Steel Pipe for Fire Protection Use.

R. ASTM B32 - Standard Specification for Solder Metal.

S. ASTM B75/B75M - Standard Specification for Seamless Copper Tube.

T. ASTM B75M - Standard Specification for Seamless Copper Tube (Metric).

U. ASTM B88 - Standard Specification for Seamless Copper Water Tube.

V. ASTM B88M - Standard Specification for Seamless Copper Water Tube (Metric).

W. ASTM F438 - Standard Specification for Socket-Type Chlorinated Poly(Vinyl Chloride) (CPVC) Plastic Pipe Fittings, Schedule 40.

X. ASTM F439 - Standard Specification for Chlorinated Poly(Vinyl Chloride) (CPVC) Plastic Pipe Fittings, Schedule 80.

Y. ASTM F442/F442M - Standard Specification for Chlorinated Poly(Vinyl Chloride) (CPVC) Plastic Pipe (SDR-PR).

Z. ASTM F493 - Standard Specification for Solvent Cements for Chlorinated Poly (Vinyl Chloride) (CPVC) Plastic Pipe and Fittings.

AA. AWS A5.8/A5.8M - Specification for Filler Metals for Brazing and Braze Welding; American Welding Society.

AB. AWS D1.1/D1.1M - Structural Welding Code - Steel.

AC. AWWA C105/A21.5 - Polyethylene Encasement for Ductile-Iron Pipe Systems; American Water Works Association (ANSI/AWWA C105/A21.5).

AD. AWWA C110/A21.10 - American National Standard for Ductile-Iron and Gray-Iron Fittings, 3 In. Through 48 In. (75 mm Through 1200 mm), for Water and Other Liquids; American Water Works Association.

AE. AWWA C111/A21.11 - Rubber-Gasket Joints for Ductile-Iron Pressure Pipe and Fittings; American Water Works Association (ANSI/AWWA C111/A21.11).

AF. AWWA C151/A21.51 - Ductile-Iron Pipe, Centrifugally Cast, for Water; American Water Works Association (ANSI/AWWA C151/A21.51).

AG. NFPA 13 - Standard for the Installation of Sprinkler Systems; National Fire Protection Association.

AH. NFPA 14 - Standard for the Installation of Standpipe and Hose Systems; National Fire Protection Association.

AI. NFPA 24 - Standard for the Installation of Private Fire Service Mains and Their Appurtenances; National Fire Protection Association.

AJ. UL (FPED) - Fire Protection Equipment Directory; Underwriters Laboratories Inc..

AK. UL 262 - Gate Valves for Fire-Protection Service; Underwriters Laboratories Inc..

AL. UL 312 - Check Valves for Fire-Protection Service; Underwriters Laboratories Inc..

1.04 SUBMITTALS

A. See Gilbane Project Manual.

B. Product Data: Provide manufacturers catalogue information. Indicate valve data and ratings.

C. Project Record Documents: Record actual locations of components and tag numbering.

D. Operation and Maintenance Data: Include installation instructions and spare parts lists.

1.05 QUALITY ASSURANCE

A. Manufacturer Qualifications: Company specializing in manufacturing the Products specified in this section with minimum three years documented experience.

B. Installer Qualifications: Company specializing in performing the work of this section with minimum 3 years experience. approved by manufacturer.

C. Conform to UL requirements.

D. Valves: Bear UL label or marking. Provide manufacturer's name and pressure rating marked on valve body.

E. Products Requiring Electrical Connection: Listed and classified as suitable for the purpose specified and indicated.

1.06 DELIVERY, STORAGE, AND HANDLING

A. Deliver and store valves in shipping containers, with labeling in place.

B. Provide temporary protective coating on cast iron and steel valves.

C. Provide temporary end caps and closures on piping and fittings. Maintain in place until installation.

1.07 EXTRA MATERIALS

A. See Gilbane Project Manual.

B. Provide two valve stem packings for each size and type of valve installed.

PART 2 PRODUCTS

2.01 FIRE PROTECTION SYSTEMS

A. Sprinkler Systems: Conform work to NFPA 13.

B. Standpipe and Hose Systems: Conform to NFPA 14.

C. Welding Materials and Procedures: Conform to ASME Code.

2.02 BURIED PIPING

A. Steel Pipe: ASTM A53/A53M Schedule 40, black, with AWWA C105 polyethylene jacket, or double layer, half-lapped polyethylene tape.
   1. Steel Fittings: ASME B16.9, wrought steel, buttwelded; with double layer, half-lapped polyethylene tape.

2. Cast Iron Fittings: ASME B16.1, flanges and flanged fittings.
3. Joints: Welded in accordance with AWS D1.1.
4. Casing: Closed glass cell insulation.

B. Copper Tube: ASTM B75 (ASTM B75M), O60 or O50 temper.
1. Type: Type K (A).
2. Fittings: ASME B16.18, cast copper alloy, solder joint, pressure type.
3. Joints: AWS A5.8 Classification BCuP-3 or BCuP-4 copper/silver braze.
4. Casing: Closed glass cell insulation.

C. Cast Iron Pipe: AWWA C151/A21.51.
1. Fittings: AWWA C110, standard thickness.
2. Joints: AWWA C111, rubber gasket.
3. Mechanical Couplings: Shaped composition sealing gasket, steel bolts, nuts, and washers.

2.03 ABOVE GROUND PIPING

A. Steel Pipe: ASTM A795 Schedule 10 or ASTM A53 Schedule 40, black.
1. Steel Fittings: ASME B16.9, wrought steel, buttwelded.
2. Cast Iron Fittings: ASME B16.1, flanges and flanged fittings.
3. Malleable Iron Fittings: ASME B16.3, threaded fittings.
4. Mechanical Grooved Couplings: Malleable iron housing clamps to engage and lock, "C" shaped elastomeric sealing gasket, steel bolts, nuts, and washers; galvanized for galvanized pipe.
5. Mechanical Formed Fittings: Carbon steel housing with integral pipe stop and O-ring pocked and O-ring, uniformly compressed into permanent mechanical engagement onto pipe.

B. Copper Tube: ASTM B88 (ASTM B88M), Type K (A), H58 drawn.
1. Fittings: ASME B16.18, cast copper alloy, grooved.
2. Mechanical Grooved Couplings: Ductile iron housing with alkyd enamel paint coating clamps to engage and lock, "C" shaped elastomeric sealing gasket, steel bolts, nuts, and washers.

C. CPVC Pipe: ASTM F442/F442M, SDR 13.5.
1. Fittings: ASTM F438 Schedule 40, or ASTM F439 schedule 80, CPVC.
2. Joints: Solvent welded, using ASTM F493 cement.

D. Cast Iron Pipe: AWWA C151/A21.51.
1. Fittings: AWWA C110/A21.10, standard thickness.
2. Joints: AWWA C111, rubber gasket.
3. Mechanical Grooved Couplings: Malleable iron housing clamps to engage and lock, "C" shaped composition sealing gasket, steel bolts, nuts, and washers; galvanized for galvanized pipe.

2.04 PIPE HANGERS AND SUPPORTS

A. Hangers for Pipe Sizes 1/2 to 1-1/2 inch: Malleable iron, adjustable swivel, split ring.

B. Hangers for Pipe Sizes 2 inches and Over: Carbon steel, adjustable, clevis.

C. Multiple or Trapeze Hangers: Steel channels with welded spacers and hanger rods.

D. Wall Support for Pipe Sizes to 3 inches: Cast iron hook.

E. Wall Support for Pipe Sizes 4 inches and Over: Welded steel bracket and wrought steel clamp.

F. Vertical Support: Steel riser clamp.

G. Floor Support: Cast iron adjustable pipe saddle, lock nut, nipple, floor flange, and concrete pier or steel support.

H. Copper Pipe Support: Carbon steel ring, adjustable, copper plated.

2.05 GATE VALVES

A. Up to and including 2 inches:
   1. Bronze body, bronze trim, rising stem, handwheel, solid wedge or disc, threaded ends.

B. Over 2 inches:
   1. Iron body, bronze trim, rising stem pre-grooved for mounting tamper switch, handwheel, OS&Y, solid rubber covered bronze or cast iron wedge, flanged ends.

C. Over 4 inches:
   1. Iron body, bronze trim, non-rising stem with bolted bonnet, solid bronze wedge, flanged ends, iron body indicator post assembly.

2.06 GLOBE VALVES

A. Up to and including 2 inches:
   1. Bronze body, bronze trim, rising stem and handwheel, inside screw, renewable rubber disc, threaded ends, with backseating capacity repackable under pressure.

B. Over 2 inches:
   1. Iron body, bronze trim, rising stem, handwheel, OS&Y, plug-type disc, flanged ends, renewable seat and disc.

2.07 BALL VALVES

A. Up to and including 2 inches:
   1. Bronze two piece body, brass, chrome plated bronze, or stainless steel ball, teflon seats and stuffing box ring, lever handle and balancing stops, threaded ends.

B. Over 2 inches:
   1. Cast steel body, chrome plated steel ball, teflon seat and stuffing box seals, lever handle or gear drive handwheel for sizes 10 inches and over, flanged.

2.08 BUTTERFLY VALVES

A. Bronze Body:
   1. Stainless steel disc, resilient replaceable seat, threaded or grooved ends, extended neck, handwheel and gear drive and integral indicating device, and built-in tamper proof switch rated 10 amp at 115 volt AC.

B. Cast or Ductile Iron Body
   1. Cast or ductile iron, chrome or nickel plated ductile iron or aluminum bronze disc, resilient replaceable EPDM seat, wafer, lug, or grooved ends, extended neck, handwheel and gear drive and integral indicating device, and internal tamper switch rated 10 amp at 115 volt AC.

2.09 CHECK VALVES

A. Up to and including 2 inches:
   1. Bronze body and swing disc, rubber seat, threaded ends.

B. Over 2 inches:

1. Iron body, bronze trim, swing check with rubber disc, renewable disc and seat, flanged ends with automatic ball check.

C. 4 inches and Over:
1. Iron body, bronze disc, stainless steel spring, resilient seal, threaded, wafer, or flanged ends.

2.10 DRAIN VALVES

A. Compression Stop:
1. Bronze with hose thread nipple and cap.

B. Ball Valve:
1. Brass with cap and chain, 3/4 inch hose thread.

PART 3 EXECUTION

3.01 PREPARATION

A. Ream pipe and tube ends. Remove burrs. Bevel plain end ferrous pipe.

B. Remove scale and foreign material, from inside and outside, before assembly.

C. Prepare piping connections to equipment with flanges or unions.

3.02 INSTALLATION

A. Install sprinkler system and service main piping, hangers, and supports in accordance with NFPA 13.

B. Install standpipe piping, hangers, and supports in accordance with NFPA 14.

C. Route piping in orderly manner, plumb and parallel to building structure. Maintain gradient.

D. Install piping to conserve building space, to not interfere with use of space and other work.

E. Group piping whenever practical at common elevations.

F. Sleeve pipes passing through partitions, walls, and floors.

G. Install piping to allow for expansion and contraction without stressing pipe, joints, or connected equipment.

H. Inserts:
1. Provide inserts for placement in concrete formwork.
2. Provide inserts for suspending hangers from reinforced concrete slabs and sides of reinforced concrete beams.
3. Provide hooked rod to concrete reinforcement section for inserts carrying pipe over 4 inches.
4. Where concrete slabs form finished ceiling, locate inserts flush with slab surface.
5. Where inserts are omitted, drill through concrete slab from below and provide through-bolt with recessed square steel plate and nut flush with top of slab.

I. Pipe Hangers and Supports:
1. Install hangers to provide minimum 1/2 inch space between finished covering and adjacent work.
2. Place hangers within 12 inches of each horizontal elbow.
3. Use hangers with 1-1/2 inch minimum vertical adjustment. Design hangers for pipe movement without disengagement of supported pipe.

4. Support vertical piping at every floor. Support riser piping independently of connected horizontal piping.
5. Where several pipes can be installed in parallel and at same elevation, provide multiple or trapeze hangers.
6. Provide copper plated hangers and supports for copper piping.
7. Prime coat exposed steel hangers and supports. Hangers and supports located in crawl spaces, pipe shafts, and suspended ceiling spaces are not considered exposed.

J. Slope piping and arrange systems to drain at low points. Use eccentric reducers to maintain top of pipe level.

K. Prepare pipe, fittings, supports, and accessories for finish painting. Where pipe support members are welded to structural building framing, scrape, brush clean, and apply one coat of zinc rich primer to welding. Refer to Section 09 90 00.

L. Do not penetrate building structural members unless indicated.

M. Provide sleeves when penetrating footings, floors, and walls. Seal pipe and sleeve penetrations to achieve fire resistance equivalent to fire separation required.

N. When installing more than one piping system material, ensure system components are compatible and joined to ensure the integrity of the system. Provide necessary joining fittings. Ensure flanges, union, and couplings for servicing are consistently provided.

O. Die cut threaded joints with full cut standard taper pipe threads with red lead and linseed oil or other non-toxic joint compound applied to male threads only.

P. Install valves with stems upright or horizontal, not inverted. Remove protective coatings after installation.

Q. Provide gate, ball, or butterfly valves for shut-off or isolating service.

R. Provide drain valves at main shut-off valves, low points of piping and apparatus.

END OF SECTION

SECTION 21 05 13

MOTOR REQUIREMENTS FOR FIRE SUPPRESSION EQUIPMENT

PART 1 GENERAL

1.01 REFERENCE STANDARDS

A. ABMA STD 9 - Load Ratings and Fatigue Life for Ball Bearings; American Bearing Manufacturers Association, Inc..

B. IEEE 112 - IEEE Standard Test Procedure for Polyphase Induction Motors and Generators; Institute of Electrical and Electronic Engineers.

C. NEMA MG 1 - Motors and Generators; National Electrical Manufacturers Association.

D. NFPA 70 - National Electrical Code; National Fire Protection Association.

1.02 SUBMITTALS

A. See Giblane Building Company.

B. Product Data: Provide wiring diagrams with electrical characteristics and connection requirements.

C. Test Reports: Indicate test results verifying nominal efficiency and power factor for three phase motors larger than 1/2 horsepower.

D. Manufacturer's Installation Instructions: Indicate setting, mechanical connections, lubrication, and wiring instructions.

E. Operation Data: Include instructions for safe operating procedures.

F. Maintenance Data: Include assembly drawings, bearing data including replacement sizes, and lubrication instructions.

1.03 QUALITY ASSURANCE

A. Manufacturer Qualifications: Company specializing in manufacture of electric motors, and their accessories, with minimum three years documented product development, testing, and manufacturing experience.

B. Conform to applicable electrical code, NFPA70, or local energy code.

C. Provide certificate of compliance from authority having jurisdiction indicating approval of high efficiency motors.

D. Products Requiring Electrical Connection: Listed and classified by Underwriters' Laboratories, Inc. or testing firm acceptable to the authority having jurisdiction as suitable for the purpose specified and indicated.

1.04 DELIVERY, STORAGE, AND HANDLING

A. Protect motors stored on site from weather and moisture by maintaining factory covers and suitable weather-proof covering. For extended outdoor storage, remove motors from equipment and store separately.

1.05 WARRANTY

A. See Gilbane Building Company.

B. Provide five year manufacturer warranty for motors larger than 20 horsepower.

PART 2 PRODUCTS

2.01 MANUFACTURERS

A. Lincoln Motors: www.lincolnmotors.com.

B. A. O. Smith Electrical Products Company: www.aosmithmotors.com.

C. Reliance Electric/Rockwell Automation: www.reliance.com.

D. Substitutions: See Section 01 60 00 - Product Requirements.

2.02 GENERAL CONSTRUCTION AND REQUIREMENTS

A. Electrical Service: Refer to Section 26 27 17 for required electrical characteristics.

B. Electrical Service:
1. Motors 1/2 HP and Smaller: 115 volts, single phase, 60 Hz.
2. Motors Larger than 1/2 Horsepower: 460 volts, three phase, 60 Hz.

C. Construction:
1. Open drip-proof type except where specifically noted otherwise.
2. Design for continuous operation in 40 degrees C environment.
3. Design for temperature rise in accordance with NEMA MG 1 limits for insulation class, service factor, and motor enclosure type.
4. Motors with frame sizes 254T and larger: Energy Efficient Type.

D. Explosion-Proof Motors: UL approved and labelled for hazard classification, with over temperature protection.

E. Visible Nameplate: Indicating motor horsepower, voltage, phase, cycles, RPM, full load amps, locked rotor amps, frame size, manufacturer's name and model number, service factor, power factor, efficiency.

F. Wiring Terminations:
1. Provide terminal lugs to match branch circuit conductor quantities, sizes, and materials indicated. Enclose terminal lugs in terminal box sized to NFPA 70, threaded for conduit.
2. For fractional horsepower motors where connection is made directly, provide threaded conduit connection in end frame.

2.03 APPLICATIONS

A. Exception: Motors less than 250 watts, for intermittent service may be the equipment manufacturer's standard and need not conform to these specifications.

B. Single phase motors for centrifugal pumps: Split phase type.

C. Single phase motors for pumps: Capacitor start type.

D. Single phase motors for pumps: Capacitor start, capacitor run type.

2.04 SINGLE PHASE POWER - SPLIT PHASE MOTORS

A. Starting Torque: Less than 150 percent of full load torque.

B. Starting Current: Up to seven times full load current.

C. Breakdown Torque: Approximately 200 percent of full load torque.

D. Drip-proof Enclosure: Class A (50 degrees C temperature rise) insulation, NEMA Service Factor, prelubricated sleeve or ball bearings.

E. Enclosed Motors: Class A (50 degrees C temperature rise) insulation, 1.0 Service Factor, prelubricated ball bearings.

2.05 SINGLE PHASE POWER - PERMANENT-SPLIT CAPACITOR MOTORS

A. Starting Torque: Exceeding one fourth of full load torque.

B. Starting Current: Up to six times full load current.

C. Multiple Speed: Through tapped windings.

D. Open Drip-proof or Enclosed Air Over Enclosure: Class A (50 degrees C temperature rise) insulation, minimum 1.0 Service Factor, prelubricated sleeve or ball bearings, automatic reset overload protector.

2.06 SINGLE PHASE POWER - CAPACITOR START MOTORS

A. Starting Torque: Three times full load torque.

B. Starting Current: Less than five times full load current.

C. Pull-up Torque: Up to 350 percent of full load torque.

D. Breakdown Torque: Approximately 250 percent of full load torque.

E. Motors: Capacitor in series with starting winding; provide capacitor-start/capacitor-run motors with two capacitors in parallel with run capacitor remaining in circuit at operating speeds.

F. Drip-proof Enclosure: Class A (50 degrees C temperature rise) insulation, NEMA Service Factor, prelubricated sleeve bearings.

G. Enclosed Motors: Class A (50 degrees C temperature rise) insulation, 1.0 Service Factor, prelubricated ball bearings.

2.07 THREE PHASE POWER - SQUIRREL CAGE MOTORS

A. Starting Torque: Between 1 and 1-1/2 times full load torque.

B. Starting Current: Six times full load current.

C. Power Output, Locked Rotor Torque, Breakdown or Pull Out Torque: NEMA Design B characteristics.

D. Design, Construction, Testing, and Performance: Conform to NEMA MG 1 for Design B motors.

E. Insulation System: NEMA Class B or better.

F. Testing Procedure: In accordance with IEEE 112. Load test motors to determine free from electrical or mechanical defects in compliance with performance data.

G. Motor Frames: NEMA Standard T-Frames of steel, aluminum, or cast iron with end brackets of cast iron or aluminum with steel inserts.

H. Thermistor System (Motor Frame Sizes 254T and Larger): Three PTC thermistors embedded in motor windings and epoxy encapsulated solid state control relay for wiring into motor starter; refer to Section 26 29 13.

I. Bearings: Grease lubricated anti-friction ball bearings with housings equipped with plugged provision for relubrication, rated for minimum ABMA STD 9, L-10 life of 20,000 hours. Calculate bearing load with NEMA minimum V-belt pulley with belt center line at end of NEMA standard shaft extension. Stamp bearing sizes on nameplate.

J. Sound Power Levels: To NEMA MG 1.

K. Part Winding Start Where Indicated: Use part of winding to reduce locked rotor starting current to approximately 60 percent of full winding locked rotor current while providing approximately 50 percent of full winding locked rotor torque.

L. Weatherproof Epoxy Sealed Motors: Epoxy seal windings using vacuum and pressure with rotor and starter surfaces protected with epoxy enamel; bearings double shielded with waterproof non-washing grease.

M. Nominal Efficiency: As scheduled at full load and rated voltage when tested in accordance with IEEE 112.

N. Nominal Power Factor: As scheduled at full load and rated voltage when tested in accordance with IEEE 112.

PART 3 EXECUTION

3.01 INSTALLATION

A. Install in accordance with manufacturer's instructions.

B. Install securely on firm foundation. Mount ball bearing motors with shaft in any position.

C. Check line voltage and phase and ensure agreement with nameplate.

3.02 SCHEDULES

A. NEMA Open Motor Service Factors.
   1. 1/6-1/3 hp:
      a. 3600 rpm: 1.35.
      b. 1800 rpm: 1.35.
      c. 1200 rpm: 1.35.
      d. 900 rpm: 1.35.
   2. 1/2 hp:
      a. 3600 rpm: 1.25.
      b. 1800 rpm: 1.25.
      c. 1200 rpm: 1.25.
      d. 900 rpm: 1.15.
   3. 3/4 hp:
      a. 3600 rpm: 1.25.
      b. 1800 rpm: 1.25.
      c. 1200 rpm: 1.15.
      d. 900 rpm: 1.15.
   4. 1 hp:
      a. 3600 rpm: 1.25.
      b. 1800 rpm: 1.15.
      c. 1200 rpm: 1.15.
      d. 900 rpm: 1.15.
   5. 1.5-150 hp:
      a. 3600 rpm: 1.15.
      b. 1800 rpm: 1.15.

c. 1200 rpm: 1.15.
d. 900 rpm: 1.15.

B. Three Phase - Premium Efficiency, Open Drip-Proof Performance:
1. 1200 rpm.
a. 1 hp:
1) NEMA Frame: 145T.
2) Minimum Percent Power Factor: 72.
3) Minimum Percent Efficiency: 82.5
b. 1-1/2 hp:
1) NEMA Frame: 182T.
2) Minimum Percent Power Factor: 73.
3) Minimum Percent Efficiency: 83.
c. 2 hp:
1) NEMA Frame: 184T.
2) Minimum Percent Power Factor: 75.
3) Minimum Percent Efficiency: 85.
d. 3 hp:
1) NEMA Frame: 213T.
2) Minimum Percent Power Factor: 60.
3) Minimum Percent Efficiency: 86.
e. 5 hp:
1) NEMA Frame: 215T.
2) Minimum Percent Power Factor: 65.
3) Minimum Percent Efficiency: 87.
f. 7-1/2 hp:
1) NEMA Frame: 254T.
2) Minimum Percent Power Factor: 73.
3) Minimum Percent Efficiency: 89.
g. 10 hp:
1) NEMA Frame: 256T.
2) Minimum Percent Power Factor: 74.
3) Minimum Percent Efficiency: 89.
h. 15 hp:
1) NEMA Frame: 284T.
2) Minimum Percent Power Factor: 77.
3) Minimum Percent Efficiency: 90.
i. 20 hp:
1) NEMA Frame: 286T.
2) Minimum Percent Power Factor: 78.
j. 30 hp:
1) NEMA Frame: 326T.
2) Minimum Percent Power Factor: 78.
3) Minimum Percent Efficiency: 91.
k. 40 hp:
1) NEMA Frame: 364T.
2) Minimum Percent Power Factor: 77.
3) Minimum Percent Efficiency: 93.
l. 50 hp:
1) NEMA Frame: 365T.
2) Minimum Percent Power Factor: 79.
3) Minimum Percent Efficiency: 93.
m. 60 hp:
1) NEMA Frame: 404T.

2) Minimum Percent Power Factor: 82.
3) Minimum Percent Efficiency: 93.

n. 75 hp:
1) Minimum Percent Power Factor: 80.

o. 100 hp:
1) NEMA Frame: 444T.
2) Minimum Percent Power Factor: 80.
3) Minimum Percent Efficiency: 93.

p. 125 hp:
1) NEMA Frame: 444T.
2) Minimum Percent Power Factor: 84.
3) Minimum Percent Efficiency: 93.

2. 1800 rpm.

a. 1 hp:
1) NEMA Frame: 143T.
2) Minimum Percent Power Factor: 84.
3) Minimum Percent Efficiency: 82.

b. 1-1/2 hp:
1) NEMA Frame: 145T.
2) Minimum Percent Power Factor: 85.
3) Minimum Percent Efficiency: 84.

c. 2 hp:
1) NEMA Frame: 145T.
2) Minimum Percent Power Factor: 85.
3) Minimum Percent Efficiency: 84.

d. 3 hp:
1) NEMA Frame: 182T.
2) Minimum Percent Power Factor: 86.
3) Minimum Percent Efficiency: 86.

e. 5 hp:
1) NEMA Frame: 184T.
2) Minimum Percent Power Factor: 87.
3) Minimum Percent Efficiency: 87.

f. 7-1/2 hp:
1) NEMA Frame: 213T.
2) Minimum Percent Power Factor: 86.
3) Minimum Percent Efficiency: 88.

g. 10 hp:
1) NEMA Frame: 215T.
2) Minimum Percent Power Factor: 85.
3) Minimum Percent Efficiency: 89.

h. 15 hp:
1) NEMA Frame: 256T.
2) Minimum Percent Power Factor: 85.
3) Minimum Percent Efficiency: 91.

i. 20 hp:
1) NEMA Frame: 256T.
2) Minimum Percent Power Factor: 86.
3) Minimum Percent Efficiency: 91.

j. 25 hp:
1) NEMA Frame: 284T.
2) Minimum Percent Power Factor: 85.
3) Minimum Percent Efficiency: 91.

k. 30 hp:
   1) NEMA Frame: 286T.
   2) Minimum Percent Power Factor: 88.
   3) Minimum Percent Efficiency: 92.
l. 40 hp:
   1) NEMA Frame: 324T.
   2) Minimum Percent Power Factor: 83.
   3) Minimum Percent Efficiency: 92.
m. 50 hp:
   1) NEMA Frame: 326T.
   2) Minimum Percent Power Factor: 88.
   3) Minimum Percent Efficiency: 93.
n. 60 hp:
   1) NEMA Frame: 364T.
   2) Minimum Percent Power Factor: 88.
   3) Minimum Percent Efficiency: 93.
o. 75 hp:
   1) NEMA Frame: 365T.
   2) Minimum Percent Power Factor: 88.
   3) Minimum Percent Efficiency: 93.
p. 100 hp:
   1) NEMA Frame: 404T.
   2) Minimum Percent Power Factor: 83.
   3) Minimum Percent Efficiency: 93.
q. 125 hp:
   1) NEMA Frame: 405T.
   2) Minimum Percent Power Factor: 86.
   3) Minimum Percent Efficiency: 93.
r. 150 hp:
   1) NEMA Frame: 444T.
   2) Minimum Percent Power Factor: 85.
   3) Minimum Percent Efficiency: 93.
s. 200 hp:
   1) NEMA Frame: 445T.
   2) Minimum Percent Power Factor: 85.
   3) Minimum Percent Efficiency: 94.

3. 3600 rpm.
   a. 1-1/2 hp:
      1) NEMA Frame: 143T.
      2) Minimum Percent Power Factor: 85.
      3) Minimum Percent Efficiency: 82.
   b. 2 hp:
      1) NEMA Frame: 145T.
      2) Minimum Percent Power Factor: 87.
      3) Minimum Percent Efficiency: 82.
   c. 3 hp:
      1) NEMA Frame: 145T.
      2) Minimum Percent Power Factor: 85.
      3) Minimum Percent Efficiency: 84.
   d. 5 hp:
      1) NEMA Frame: 182T.
      2) Minimum Percent Power Factor: 86.
      3) Minimum Percent Efficiency: 85.

e. 7-1/2 hp:
   1) NEMA Frame: 184T.
   2) Minimum Percent Power Factor: 88.
   3) Minimum Percent Efficiency: 86.
f. 10 hp:
   1) NEMA Frame: 213T.
   2) Minimum Percent Power Factor: 86.
   3) Minimum Percent Efficiency: 87.
g. 15 hp:
   1) NEMA Frame: 215T.
   2) Minimum Percent Power Factor: 89.
   3) Minimum Percent Efficiency: 89.
h. 20 hp:
   1) NEMA Frame: 254T.
   2) Minimum Percent Power Factor: 89.
   3) Minimum Percent Efficiency: 90.
i. 25 hp:
   1) NEMA Frame: 256T.
   2) Minimum Percent Power Factor: 92.
   3) Minimum Percent Efficiency: 90.
j. 30 hp:
   1) NEMA Frame: 284T.
   2) Minimum Percent Power Factor: 91.
   3) Minimum Percent Efficiency: 91.
k. 40 hp:
   1) NEMA Frame: 286T.
   2) Minimum Percent Power Factor: 92.
   3) Minimum Percent Efficiency: 92.
l. 50 hp:
   1) NEMA Frame: 324T.
   2) Minimum Percent Power Factor: 89.
   3) Minimum Percent Efficiency: 93.
m. 60 hp:
   1) NEMA Frame: 326T.
   2) Minimum Percent Power Factor: 91.
   3) Minimum Percent Efficiency: 93.
n. 75 hp:
   1) NEMA Frame: 364T.
   2) Minimum Percent Power Factor: 88.
   3) Minimum Percent Efficiency: 93.
o. 100 hp:
   1) NEMA Frame: 365T.
   2) Minimum Percent Power Factor: 88.
   3) Minimum Percent Efficiency: 92.

C. Three Phase - Energy Efficient, Totally Enclosed, Fan Cooled Performance:
1. 1200 rpm.
   a. 1 hp:
      1) NEMA Frame: 145T.
      2) Minimum Percent Power Factor: 72.
      3) Minimum Percent Efficiency: 81.
   b. 1-1/2 hp:
      1) NEMA Frame: 182T.
      2) Minimum Percent Power Factor: 73.

3) Minimum Percent Efficiency: 83.

c. 2 hp:
1) NEMA Frame: 184T.
2) Minimum Percent Power Factor: 68.
3) Minimum Percent Efficiency: 85.

d. 3 hp:
1) NEMA Frame: 213T.
2) Minimum Percent Power Factor: 63.
3) Minimum Percent Efficiency: 86.

e. 5 hp:
1) NEMA Frame: 215T.
2) Minimum Percent Power Factor: 66.
3) Minimum Percent Efficiency: 86.

f. 7-1/2 hp:
1) NEMA Frame: 254T.
2) Minimum Percent Power Factor: 68.
3) Minimum Percent Efficiency: 89.

g. 10 hp:
1) NEMA Frame: 256T.
2) Minimum Percent Power Factor: 75.
3) Minimum Percent Efficiency: 89.

h. 15 hp:
1) NEMA Frame: 284T.
2) Minimum Percent Power Factor: 72.
3) Minimum Percent Efficiency: 90.

i. 20 hp:
1) NEMA Frame: 286T.
2) Minimum Percent Power Factor: 76.
3) Minimum Percent Efficiency: 90.

j. 25 hp:
1) NEMA Frame: 324T.
2) Minimum Percent Power Factor: 71.
3) Minimum Percent Efficiency: 90.

k. 30 hp:
1) NEMA Frame: 326T.
2) Minimum Percent Power Factor: 79.
3) Minimum Percent Efficiency: 91.

l. 40 hp:
1) NEMA Frame: 364T.
2) Minimum Percent Power Factor: 78.
3) Minimum Percent Efficiency: 92.

m. 50 hp:
1) NEMA Frame: 365T.
2) Minimum Percent Power Factor: 81.
3) Minimum Percent Efficiency: 92.

n. 60 hp:
1) NEMA Frame: 404T.
2) Minimum Percent Power Factor: 83.
3) Minimum Percent Efficiency: 92.

o. 75 hp:
1) NEMA Frame: 405T.
2) Minimum Percent Power Factor: 80.
3) Minimum Percent Efficiency: 92.

p. 100 hp:
   1) NEMA Frame: 444T.
   2) Minimum Percent Power Factor: 83.
   3) Minimum Percent Efficiency: 93.
q. 125 hp:
   1) NEMA Frame: 444T.
   2) Minimum Percent Power Factor: 85.
   3) Minimum Percent Efficiency: 93.

2. 1800 rpm.
   a. 1 hp:
      1) NEMA Frame: 143T.
      2) Minimum Percent Power Factor: 84.
      3) Minimum Percent Efficiency: 82.
   b. 1-1/2 hp:
      1) NEMA Frame: 145T.
      2) Minimum Percent Power Factor: 85.
      3) Minimum Percent Efficiency: 84.
   c. 2 hp:
      1) NEMA Frame: 145T.
      2) Minimum Percent Power Factor: 85.
      3) Minimum Percent Efficiency: 84.
   d. 3 hp:
      1) NEMA Frame: 182T.
      2) Minimum Percent Power Factor: 83.
      3) Minimum Percent Efficiency: 87.
   e. 5 hp:
      1) NEMA Frame: 184T.
      2) Minimum Percent Power Factor: 83.
      3) Minimum Percent Efficiency: 88.
   f. 7-1/2 hp:
      1) NEMA Frame: 213T.
      2) Minimum Percent Power Factor: 85.
      3) Minimum Percent Efficiency: 89.
   g. 10 hp:
      1) NEMA Frame: 215T.
      2) Minimum Percent Power Factor: 84.
      3) Minimum Percent Efficiency: 90.
   h. 15 hp:
      1) NEMA Frame: 254T.
      2) Minimum Percent Power Factor: 86.
      3) Minimum Percent Efficiency: 91.
   i. 20 hp:
      1) NEMA Frame: 256T.
      2) Minimum Percent Power Factor: 85.
      3) Minimum Percent Efficiency: 91.
   j. 25 hp:
      1) NEMA Frame: 284T.
      2) Minimum Percent Power Factor: 84.
      3) Minimum Percent Efficiency: 92.
   k. 30 hp:
      1) NEMA Frame: 286T.
      2) Minimum Percent Power Factor: 86.
      3) Minimum Percent Efficiency: 93.

l. 40 hp:
   1) NEMA Frame: 324T.
   2) Minimum Percent Power Factor: 83.
   3) Minimum Percent Efficiency: 93.
m. 50 hp:
   1) NEMA Frame: 326T.
   2) Minimum Percent Power Factor: 85.
   3) Minimum Percent Efficiency: 93.
n. 60 hp:
   1) NEMA Frame: 364T.
   2) Minimum Percent Power Factor: 87.
   3) Minimum Percent Efficiency: 93.
o. 75 hp:
   1) NEMA Frame: 365T.
   2) Minimum Percent Power Factor: 87.
   3) Minimum Percent Efficiency: 93.
p. 100 hp:
   1) NEMA Frame: 405T.
   2) Minimum Percent Power Factor: 86.
   3) Minimum Percent Efficiency: 94.
q. 125 hp:
   1) NEMA Frame: 444T.
   2) Minimum Percent Power Factor: 87.
   3) Minimum Percent Efficiency: 94.
r. 150 hp:
   1) NEMA Frame: 445T.
   2) Minimum Percent Power Factor: 88.
   3) Minimum Percent Efficiency: 94.
s. 200 hp:
   1) NEMA Frame: 447T.
   2) Minimum Percent Power Factor: 87.
   3) Minimum Percent Efficiency: 95.

3. 3600 rpm.
   a. 1-1/2 hp:
      1) NEMA Frame: 143T.
      2) Minimum Percent Power Factor: 85.
      3) Minimum Percent Efficiency: 82.
   b. 2 hp:
      1) NEMA Frame: 145T.
      2) Minimum Percent Power Factor: 87.
      3) Minimum Percent Efficiency: 82.
   c. 3 hp:
      1) NEMA Frame: 182T.
      2) Minimum Percent Power Factor: 87.
      3) Minimum Percent Efficiency: 82.
   d. 5 hp:
      1) NEMA Frame: 184T.
      2) Minimum Percent Power Factor: 88.
      3) Minimum Percent Efficiency: 85.
   e. 7-1/2 hp:
      1) NEMA Frame: 213T.
      2) Minimum Percent Power Factor: 86.
      3) Minimum Percent Efficiency: 86.

f. 10 hp:
   1) NEMA Frame: 215T.
   2) Minimum Percent Power Factor: 86.
   3) Minimum Percent Efficiency: 87.
g. 15 hp:
   1) NEMA Frame: 254T.
   2) Minimum Percent Power Factor: 91.
   3) Minimum Percent Efficiency: 88.
h. 20 hp:
   1) NEMA Frame: 256T.
   2) Minimum Percent Power Factor: 89.
   3) Minimum Percent Efficiency: 89.
i. 25 hp:
   1) NEMA Frame: 284T.
   2) Minimum Percent Power Factor: 92.
   3) Minimum Percent Efficiency: 90.
j. 30 hp:
   1) NEMA Frame: 286T.
   2) Minimum Percent Power Factor: 92.
   3) Minimum Percent Efficiency: 91.
k. 40 hp:
   1) NEMA Frame: 324T.
   2) Minimum Percent Power Factor: 91.
   3) Minimum Percent Efficiency: 91.
l. 50 hp:
   1) NEMA Frame: 326T.
   2) Minimum Percent Power Factor: 92.
   3) Minimum Percent Efficiency: 90.
m. 60 hp:
   1) NEMA Frame: 364T.
   2) Minimum Percent Power Factor: 93.
   3) Minimum Percent Efficiency: 91.
n. 75 hp:
   1) NEMA Frame: 365T.
   2) Minimum Percent Power Factor: 91.
   3) Minimum Percent Efficiency: 91.
o. 100 hp:
   1) NEMA Frame: 405T.
   2) Minimum Percent Power Factor: 92.
   3) Minimum Percent Efficiency: 92.

END OF SECTION

SECTION 21 05 48

VIBRATION AND SEISMIC CONTROLS FOR EQUIPMENT

PART 1 GENERAL

1.01 SECTION INCLUDES

A. Equipment support bases.

B. Vibration isolators.

C. Seismic restraints.

1.02 SUBMITTALS

A. Product Data:

B. Shop Drawings: Indicate inertia bases and locate vibration isolators, with static and dynamic load on each. Indicate seismic control measures.

C. Manufacturer's Instructions: Indicate installation instructions with special procedures and setting dimensions.

PART 2 PRODUCTS

2.01 MANUFACTURERS

A. Isolation Technology, Inc: www.isolationtech.com.

B. Kinetics Noise Control, Inc: www.kineticsnoise.com.

C. Mason Industries: www.mason-ind.com.

2.02 PERFORMANCE REQUIREMENTS

A. General:
   1. All vibration isolators, base frames and inertia bases to conform to all uniform deflection and stability requirements under all operating loads.

2.03 EQUIPMENT SUPPORT BASES

2.04 VIBRATION ISOLATORS

A. Open Spring Isolators:
   1. Springs: Minimum horizontal stiffness equal to 75 percent vertical stiffness, with working deflection between 0.3 and 0.6 of maximum deflection. Color code springs for load carrying capacity.
   2. Spring Mounts: Provide with leveling devices, minimum 0.25 inch thick neoprene sound pads, and zinc chromate plated hardware.
   3. Sound Pads: Size for minimum deflection of 0.05 inch; meet requirements for neoprene pad isolators.
   4. For Exterior and Humid Areas: Hot dipped galvanized housings and neoprene coated springs.

B. Restrained Open Spring Isolators:
   1. Springs: Minimum horizontal stiffness equal to 75 percent vertical stiffness, with working deflection between 0.3 and 0.6 of maximum deflection. Color code springs for load carrying capacity.

2. Spring Mounts: Provide with leveling devices, minimum 0.25 inch thick neoprene sound pads, and zinc chromate plated hardware.
3. Sound Pads: Size for minimum deflection of 0.05 inch; meet requirements for neoprene pad isolators.
4. Restraint: Provide heavy mounting frame and limit stops.
5. For Exterior and Humid Areas: Hot dipped galvanized housings and neoprene coated springs.

C. Closed Spring Isolators:
1. Type : Closed spring mount with top and bottom housing separated with neoprene rubber stabilizers.
2. Springs: Minimum horizontal stiffness equal to 75 percent vertical stiffness, with working deflection between 0.3 and 0.6 of maximum deflection. Color code springs for load carrying capacity.
3. Housings: Incorporate neoprene isolation pad meeting requirements for neoprene pad isolators, and neoprene side stabilizers with minimum 0.25 inch clearance.
4. For Exterior and Humid Areas: Hot dipped galvanized housings and neoprene coated springs.

D. Restrained Closed Spring Isolators:
1. Type : Closed spring mount with top and bottom housing separated with neoprene rubber stabilizers.
2. Springs: Minimum horizontal stiffness equal to 75 percent vertical stiffness, with working deflection between 0.3 and 0.6 of maximum deflection. Color code springs for load carrying capacity.
3. Housings: Incorporate neoprene isolation pad meeting requirements for neoprene pad isolators, and neoprene side stabilizers with minimum 0.25 inch clearance and limit stops.
4. For Exterior and Humid Areas: Hot dipped galvanized housings and neoprene coated springs.

E. Spring Hanger:
1. Springs: Minimum horizontal stiffness equal to 75 percent vertical stiffness, with working deflection between 0.3 and 0.6 of maximum deflection. Color code springs for load carrying capacity.
2. Housings: Incorporate neoprene isolation pad meeting requirements for neoprene pad isolators.
3. Misalignment: Capable of 20 degree hanger rod misalignment.
4. For Exterior and Humid Areas: Hot dipped galvanized housings and neoprene coated springs.

F. Neoprene Pad Isolators:
1. Rubber or neoprene waffle pads.
   a. Hardness: 30 durometer.
   b. Thickness: Minimum 1/2 inch.
   c. Maximum Loading: 50 psi.
   d. Rib Height: Maximum 0.7 times width.
2. Configuration: Single layer.
3. Configuration: 1/2 inch thick waffle pads bonded each side of 1/4 inch thick steel plate.

G. Rubber Mount or Hanger: Molded rubber designed for 0.4 inch deflection with threaded insert.

H. Glass Fiber Pads: Neoprene jacketed pre-compressed molded glass fiber.

I. Seismic Snubbers:
   1. Type: Non-directional and double acting unit consisting of interlocking steel members restrained by neoprene elements.
   2. Elements: Replaceable neoprene, minimum of 0.75 inch thick with minimum 1/8 inch air gap.
   3. Capacity: 4 times load assigned to mount groupings at 0.4 inch deflection.
   4. Attachment Points and Fasteners: Capable of withstanding 3 times rated load capacity of seismic snubber.

PART 3 EXECUTION

3.01 INSTALLATION - GENERAL

A. Install in accordance with manufacturer's instructions.

B. Comply with the requirements of NFPA 13.

C. Bases:
   1. Set steel bases for one inch clearance between housekeeping pad and base.
   2. Set concrete inertia bases for 2 inches clearance between housekeeping pad and base.
   3. Adjust equipment level.

D. On closed spring isolators, adjust so side stabilizers are clear under normal operating conditions.

E. Prior to making piping connections to equipment with operating weights substantially different from installed weights, block up equipment with temporary shims to final height. When full load is applied, adjust isolators to load to allow shim removal.

F. Provide seismic snubbers for all equipment, piping, and ductwork mounted on isolators. Each inertia base shall have minimum of four seismic snubbers located close to isolators. Snub equipment designated for post-disaster use to 0.05 inch maximum clearance. Other snubbers shall have clearance between 0.15 inch and 0.25 inch.

G. Support piping connections to equipment mounted on isolators using isolators or resilient hangers for scheduled distance.
   1. Up to 4 Inches Pipe Size: First three points of support.
   2. 5 to 8 Inches Pipe Size: First four points of support.
   3. 10 inches Pipe Size and Over: First six points of support.
   4. Select three hangers closest to vibration source for minimum 1.0 inch static deflection or static deflection of isolated equipment. Select remaining isolators for minimum 1.0 inch static deflection or 1/2 static deflection of isolated equipment.

3.02 FIELD QUALITY CONTROL

A. See Section 01 40 00 - Quality Requirements, for additional requirements.

B. Inspect isolated equipment after installation and submit report. Include static deflections.

3.03 SCHEDULES

A. Pipe Isolation Schedule.
   1. 1 Inch Pipe Size: Isolate 120 diameters from equipment.
   2. 2 Inch Pipe Size: Isolate 90 diameters from equipment.
   3. 3 Inch Pipe Size: Isolate 80 diameters from equipment.
   4. 4 Inch Pipe Size: Isolate 75 diameters from equipment.
   5. 6 Inch Pipe Size: Isolate 60 diameters from equipment.
   6. 8 Inch Pipe Size: Isolate 60 diameters from equipment.

7. 10 Inch Pipe Size: Isolate 54 diameters from equipment.
8. 12 Inch Pipe Size: Isolate 50 diameters from equipment.
9. 16 Inch Pipe Size: Isolate 45 diameters from equipment.
10. 24 Inch Pipe Size: Isolate 38 diameters from equipment.
11. Over 24 Inch Pipe Size: As indicated.

END OF SECTION

SECTION 21 05 53

IDENTIFICATION FOR FIRE SUPP. PIPING AND EQUIPMENT

PART 1 GENERAL

1.01 SECTION INCLUDES

A. Nameplates.

B. Tags.

C. Stencils.

D. Pipe Markers.

1.02 RELATED REQUIREMENTS

A. Section 09 90 00 - Painting and Coating: Identification painting.

1.03 REFERENCE STANDARDS

A. ASME A13.1 - Scheme for the Identification of Piping Systems; The American Society of Mechanical Engineers.

1.04 SUBMITTALS

A. List: Submit list of wording, symbols, letter size, and color coding for mechanical identification.

B. Chart and Schedule: Submit valve chart and schedule, including valve tag number, location, function, and valve manufacturer's name and model number.

C. Product Data: Provide manufacturers catalog literature for each product required.

D. Manufacturer's Installation Instructions: Indicate special procedures, and installation.

E. Project Record Documents: Record actual locations of tagged valves.

PART 2 PRODUCTS

2.01 MANUFACTURERS

A. Brady Corporation: www.bradycorp.com.

B. Champion America, Inc: www.Champion-America.com.

C. Seton Identification Products: www.seton.com/aec.

D. Substitutions: See Section 01 60 00 - Product Requirements.

2.02 NAMEPLATES

A. Description: Laminated three-layer plastic with engraved letters.
   1. Letter Color: White.
   2. Letter Height: 1/4 inch.
   3. Background Color: Black.

2.03 TAGS

A. Plastic Tags: Laminated three-layer plastic with engraved black letters on light contrasting background color. Tag size minimum 1-1/2 inch diameter.

B. Metal Tags: Brass with stamped letters; tag size minimum 1-1/2 inch diameter with smooth edges.

C. Valve Tag Chart: Typewritten letter size list in anodized aluminum frame.

2.04 STENCILS

A. Stencils: With clean cut symbols and letters of following size:
   1. 3/4 to 1-1/4 inch Outside Diameter of Insulation or Pipe: 8 inch long color field, 1/2 inch high letters.
   2. 1-1/2 to 2 inch Outside Diameter of Insulation or Pipe: 8 inch long color field, 3/4 inch high letters.
   3. 2-1/2 to 6 inch Outside Diameter of Insulation or Pipe: 12 inch long color field, 1-1/4 inch high letters.
   4. 8 to 10 inch Outside Diameter of Insulation or Pipe: 24 inch long color field, 2-1/2 inch high letters.
   5. Over 10 inch Outside Diameter of Insulation or Pipe: 32 inch long color field, 3-1/2 inch high letters.
   6. Equipment: 2-1/2 inch high letters.

B. Stencil Paint: As specified in Section 09 90 00, semi-gloss enamel, colors conforming to ASME A13.1.

2.05 PIPE MARKERS

A. Color: Conform to ASME A13.1.

B. Plastic Pipe Markers: Factory fabricated, flexible, semi- rigid plastic, preformed to fit around pipe or pipe covering; minimum information indicating flow direction arrow and identification of fluid being conveyed.

C. Plastic Tape Pipe Markers: Flexible, vinyl film tape with pressure sensitive adhesive backing and printed markings.

D. Underground Plastic Pipe Markers: Bright colored continuously printed plastic ribbon tape, minimum 6 inches wide by 4 mil thick, manufactured for direct burial service.

2.06 CEILING TACKS

A. Description: Steel with 3/4 inch diameter color coded head.

PART 3 EXECUTION

3.01 PREPARATION

A. Degrease and clean surfaces to receive adhesive for identification materials.

B. Prepare surfaces in accordance with Section 09 90 00 for stencil painting.

3.02 INSTALLATION

A. Install nameplates with corrosive-resistant mechanical fasteners, or adhesive. Apply with sufficient adhesive to ensure permanent adhesion and seal with clear lacquer.

B. Install tags with corrosion resistant chain.

C. Apply stencil painting in accordance with Section 09 90 00.

D. Install plastic pipe markers in accordance with manufacturer's instructions.

E. Install plastic tape pipe markers complete around pipe in accordance with manufacturer's instructions.

F. Install underground plastic pipe markers 6 to 8 inches below finished grade, directly above buried pipe.

G. Identify pumps and valves with plastic nameplates. Small devices, such as in-line pumps, may be identified with tags.

H. Identify control panels and major control components outside panels with plastic nameplates.

I. Identify thermostats relating to terminal boxes or valves with nameplates.

J. Identify valves in main and branch piping with tags.

K. Tag automatic controls, instruments, and relays. Key to control schematic.

L. Identify piping, concealed or exposed, with plastic pipe markers. Use tags on piping 3/4 inch diameter and smaller. Identify service, flow direction, and pressure. Install in clear view and align with axis of piping. Locate identification not to exceed 20 feet on straight runs including risers and drops, adjacent to each valve and Tee, at each side of penetration of structure or enclosure, and at each obstruction.

M. Locate ceiling tacks to locate valves above T-bar type panel ceilings. Locate in corner of panel closest to equipment.

END OF SECTION

SECTION 21 12 00

FIRE-SUPPRESSION STANDPIPES

PART 1 GENERAL

1.01 SECTION INCLUDES

A. Standpipe system.

B. Fire department connection.

C. Fire extinguishers located in hose cabinets.

1.02 RELATED REQUIREMENTS

A. Section 10 44 00 - Fire Protection Specialties.

B. Section 21 05 00 - Common Work Results for Fire Suppression: Fire protection piping.

C. Section 21 05 53 - Identification for Fire Suppression Piping and Equipment.

D. Section 21 30 00 - Fire Pumps.

E. Section 21 13 00 - Fire-Suppression Sprinkler Systems.

F. Section 22 05 53 - Identification for Plumbing Piping and Equipment.

G. Section 26 27 17 - Equipment Wiring: Electrical characteristics and wiring connections.

1.03 REFERENCE STANDARDS

A. FM P7825 - Approval Guide; Factory Mutual Research Corporation.

B. ITS (DIR) - Directory of Listed Products; Intertek Testing Services NA, Inc..

C. NFPA 10 - Standard for Portable Fire Extinguishers; National Fire Protection Association.

D. NFPA 14 - Standard for the Installation of Standpipe and Hose Systems; National Fire Protection Association.

E. UL (FPED) - Fire Protection Equipment Directory; Underwriters Laboratories Inc..

1.04 SUBMITTALS

A. Product Data: Provide manufacturer's catalog sheet for equipment indicating rough-in size, finish, and accessories.

B. Shop Drawings: Indicate supports, components, accessories, and sizes.
   1. Submit shop drawings and product data to Red Clay Consolidated School District's insurance underwriter for approval.
   2. Submit proof of approval to Architect.

C. Project Record Documents: Record actual locations of components.

D. Operation Data: Include manufacturer's data.

E. Maintenance Data: Include servicing requirements and test schedule.

F. Certificates: Provide certificate of compliance from authority having jurisdiction indicating approval of field acceptance tests.

1.05 QUALITY ASSURANCE

A. Perform Work in accordance with NFPA 14. Maintain one copy on site.

B. Installer Qualifications: Company specializing in performing the work of this section with minimum three years experience approved by manufacturer.

1.06 PRE-INSTALLATION MEETING

A. Convene one week before starting work of this section.

1.07 DELIVERY, STORAGE, AND HANDLING

A. Deliver and store products in shipping packaging until installation.

1.08 EXTRA MATERIALS

A. Provide two extra hose nozzles and hoses.

PART 2 PRODUCTS

2.01 FIRE HOSE CABINETS

A. Hose Cabinets:
   1. Style: Recessed mounted.
   2. Tub: 16 gage thick steel, prepared for pipe and accessory rough-in.
   3. Door: 12 gage thick steel, flush,; hinged, positive latch device.
   4. Finish: Prime Coated.

B. Hose Rack: Steel with polished chrome finish; swivel type with pins and water stop.

C. Hose: 1 inch diameter, 50 feet long, of linen hose; mildew and rot-resistant.

D. Nozzle: Chrome plated brass; combination fog, straight stream, and adjustable shut-off.

2.02 VALVES

A. Hose Station Valve: Angle type, brass finish, 1-1/2 inch nominal size with automatic ball drip; refer to Section 21 05 00.

B. Hose Connection Valve: Angle type; brass finish; 2-1/2 inch size, thread to match fire department hardware, 300 psi working pressure, with threaded cap and chain of same material and finish; refer to Section 21 05 00.

C. Pressure Reducing Valve: Angle type; brass finish with inner hydraulic controls; 1-1/2 inch size, thread to match fire department hardware, 400 psi inlet pressure, with threaded cap and chain of same material and finish; refer to Section 21 05 00.

D. Hose Connection Valve Cabinets:
   1. Style: Recessed mounted.
   2. Tub: 16 gage thick steel, prepared for pipe and accessory rough-in.
   3. Door: 12 gage thick steel, flush,; hinged, positive latch device.
   4. Finish: Prime Coated.

2.03 FIRE DEPARTMENT CONNECTION

A. Type: Flush mounted wall type with brass finish.

B. Outlets: Two way with thread size to suit fire department hardware; threaded dust cap and chain of matching material and finish.

C. Drain: 3/4 inch automatic drip, outside.

D. Label: "Standpipe - Fire Department Connection".

2.04 FIRE EXTINGUISHERS

A. General: Comply with NFPA 10; UL listed.

B. Water Type: Copper container with positive displacement pump and discharge hose.
   1. 2-1/2 gallon capacity with 2A rating.
   2. 5 gallon capacity with 4A rating.

C. Carbon Dioxide Type: Insulated handle, hose and horn discharge assembly, self-closing lever or squeeze grip operated, insulated handle.
   1. 5 pound capacity with 5BC rating.
   2. 10 pound capacity with 10BC rating.
   3. 15 pound capacity with 10BC rating.
   4. 20 pound capacity with 10BC rating.

D. Multi-Purpose Dry Chemical Type: Cartridge operated with hose and shut-off nozzle or integral shut-off nozzle.
   1. 2-1/2 pound capacity with 1A:10BC rating.
   2. 5 pound capacity with 2A:10BC rating.
   3. 6 pound capacity with 3A:40BC rating.
   4. 10 pound capacity with 4A:60BC rating.
   5. 20 pound capacity with 20A:120BC rating.

PART 3 EXECUTION

3.01 INSTALLATION

A. Install in accordance with manufacturer's instructions.

B. Install in accordance with NFPA 14.

C. Locate and secure cabinets plumb and level. Establish top of cabinet (inside horizontal) surface 66 inches above finished floor.

D. Locate hose station valve in cabinet at 60 inches above finished floor.

E. Connect standpipe system to water source ahead of domestic water connection.

F. Where static pressure exceeds 100 psi but is less than 100 psi at any hose station, provide pressure orifice disc in discharge of hose station valve to prevent pressure on hose exceeding 90 psi.

G. Where static pressure exceeds 100 psi at any hose station, provide pressure reducing valve to prevent pressure on hose exceeding 90 psi.

H. Provide two way fire department outlet connection on roof.

I. Flush entire system of foreign matter.

3.02 FIELD QUALITY CONTROL

A. Perform field inspection and testing in accordance with Section 01 40 00.

B. Test entire system in accordance with NFPA 14.

C. Test shall be witnessed by authority having jurisdiction.

END OF SECTION

SECTION 21 13 00

FIRE-SUPPRESSION SPRINKLER SYSTEMS

PART 1 GENERAL

1.01 SECTION INCLUDES

A. Wet-pipe sprinkler system.

B. System design, installation, and certification.

1.02 RELATED REQUIREMENTS

A. Section 28 31 00 - Fire Detection and Alarm.

B. Section 21 05 00 - Common Work Results for Fire Suppression: Pipe, fittings, and valves.

C. Section 21 05 48 - Vibration and Seismic Controls for Fire Suppression Piping and Equipment.

D. Section 21 05 53 - Identification for Fire Suppression Piping and Equipment.

E. Section 21 30 00 - Fire Pumps.

F. Section 21 12 00 - Fire-Suppression Standpipes.

G. Section 14 91 00 - Facility Chutes: Sprinkler heads inside chutes.

H. Section 22 05 48 - Vibration and Seismic Controls for Plumbing Piping and Equipment.

I. Section 22 05 53 - Identification for Plumbing Piping and Equipment.

J. Section 26 27 17 - Equipment Wiring: Electrical characteristics and wiring connections.

1.03 REFERENCE STANDARDS

A. FM P7825 - Approval Guide; Factory Mutual Research Corporation.

B. ITS (DIR) - Directory of Listed Products; Intertek Testing Services NA, Inc..

C. NFPA 13 - Standard for the Installation of Sprinkler Systems; National Fire Protection Association.

D. NFPA 13R - Standard for the Installation of Sprinkler Systems in Residential Occupancies up to and Including Four Stories in Height; National Fire Protection Association.

E. UL (FPED) - Fire Protection Equipment Directory; Underwriters Laboratories Inc..

1.04 SUBMITTALS

A. Product Data: Provide data on sprinklers, valves, and specialties, including manufacturers catalog information. Submit performance ratings, rough-in details, weights, support requirements, and piping connections.

B. Shop Drawings:
   1. Submit preliminary layout of finished ceiling areas indicating only sprinkler locations coordinated with ceiling installation.
   2. Indicate hydraulic calculations, detailed pipe layout, hangers and supports, sprinklers, components and accessories. Indicate system controls.
   3. Submit shop drawings and hydraulic calculations to authority having jurisdiction, and Fire Marshall for approval. Submit proof of approval to Architect.

C. Samples: Submit one of each style of sprinkler specified.

D. Project Record Documents: Record actual locations of sprinklers and deviations of piping from drawings. Indicate drain and test locations.

E. Manufacturer's Certificate: Certify that system has been tested and meets or exceeds specified requirements and code requirements.

F. Operation and Maintenance Data: Include components of system, servicing requirements, record drawings, inspection data, replacement part numbers and availability, and location and numbers of service depot.

G. Maintenance Materials: Furnish the following for Red Clay Consolidated School District's use in maintenance of project.
   1. Extra Sprinklers: Type and size matching those installed, in quantity required by referenced NFPA design and installation standard.
   2. Sprinkler Wrenches: For each sprinkler type.

1.05 QUALITY ASSURANCE

A. Maintain one copy of referenced design and installation standard on site.

B. Conform to UL requirements.

C. Designer Qualifications: Design system under direct supervision of a Professional Engineer experienced in design of this type of work and licensed in DE.

D. Manufacturer Qualifications: Company specializing in manufacturing the Products specified in this section with minimum three years documented experience.

E. Installer Qualifications: Company specializing in performing the work of this section with minimum three years experience approved by manufacturer.

F. Equipment and Components: Provide products that bear UL label or marking.

G. Products Requiring Electrical Connection: Listed and classified by Underwriters' Laboratories Inc. or testing firm acceptable to the authority having jurisdiction as suitable for the purpose specified and indicated.

1.06 MOCK-UP

A. Provide components for installation in mock-up.

B. Mock-up may not remain as part of the Work.

1.07 PRE-INSTALLATION MEETING

A. Convene one week before starting work of this section.

1.08 DELIVERY, STORAGE, AND HANDLING

A. Store products in shipping containers and maintain in place until installation. Provide temporary inlet and outlet caps. Maintain caps in place until installation.

1.09 EXTRA MATERIALS

A. Provide extra sprinklers of type and size matching those installed, in quantity required by referenced NFPA design and installation standard.

B. Provide suitable wrenches for each sprinkler type.

C. Provide metal storage cabinet located adjacent to alarm valve.

PART 2 PRODUCTS

2.01 SPRINKLER SYSTEM

A. Sprinkler System: Provide coverage for building areas noted.

B. Occupancy: comply with NFPA 13.

C. Water Supply: Determine volume and pressure from water flow test data.
   1. Revise design when test data available prior to submittals.

D. Interface system with building fire and smoke alarm system.

E. Provide fire department connections where indicated.

F. Storage Cabinet for Spare Sprinklers and Tools: Steel, located adjacent to alarm valve.

2.02 SPRINKLERS

A. Suspended Ceiling Type: Standard, Semi-recessed, Recessed or Concealed pendant type with matching push on, clamp on or screw on escutcheon plate.
   1. Finish: Brass or Chrome plated.
      a. Within Standard Acoustical Tile Ceilings: White with White Estucheon Plate
      b. Within Wooden Finish Acoustical Clouds: Chrome Plated with Chrome Plated Estucheon Plate
   2. Fusible Link: Fusible solder link type temperature rated for specific area hazard.

B. Exposed Area Type: Standard upright type with guard.
   1. Finish: Chrome plated.
   2. Fusible Link: Fusible solder link type temperature rated for specific area hazard.

C. Sidewall Type: Standard, Semi-recessed or Recessed horizontal sidewall type with matching push on escutcheon plate and guard.
   1. Finish: Chrome plated.
   2. Escutcheon Plate Finish: Chrome plated.
   3. Fusible Link: Fusible solder link type temperature rated for specific area hazard.

D. Dry Sprinklers: Standard, Recessed or Exposed pendant type with matching push on escutcheon plate.
   1. Finish: Chrome plated.
   2. Escutcheon Plate Finish: Chrome plated.
   3. Fusible Link: Fusible solder link type temperature rated for specific area hazard.

E. Guards: Finish to match sprinkler finish.

F. Spray Nozzles: Brass with solid cone discharge, 30 degrees of arc with blow-off dust cap.

2.03 PIPING SPECIALTIES

A. Wet Pipe Sprinkler Alarm Valve: Check type valve with divided seat ring, rubber faced clapper to automatically actuate water motor alarm and electric alarm, with pressure retard chamber and variable pressure trim; with test and drain valve.

B. Flooding Deluge Valve: Gate type valve with rubber faced disc actuated manually with water motor alarm and electric alarm, with alarm testing trim.

C. Water Motor Alarm: Hydraulically operated impeller type alarm with aluminum alloy chrome plated gong and motor housing, nylon bearings, and inlet strainer.

D. Electric Alarm: Electrically operated chrome plated gong with pressure alarm switch.

E. Water Flow Switch: Vane type switch for mounting horizontal or vertical, with two contacts; rated 10 amp at 125 volt AC and 2.5 amp at 24 volt DC.

F. Fire Department Connections:
   1. Type: Flush mounted wall type with brass finish.
   2. Outlets: Two way with thread size to suit fire department hardware; threaded dust cap and chain of matching material and finish.
   3. Drain: 3/4 inch automatic drip, outside.
   4. Label: "Sprinkler - Fire Department Connection".

G. Supervisory Switches:

H. Water Level Supervisory Switches:

I. Tank Temperature Supervisory Switches:

J. Room Temperature Supervisory Switches:

2.04 PRESSURE MAINTENANCE PUMP

A. Type: Close coupled motor and positive displacement pump unit.

B. Construction: Bronze with stainless steel shafts, carbon bearings.

C. Motor: Open drip proof, permanently lubricated.

D. Electrical Characteristics:
   1. 0.33 hp.
   2. 115 volts, single phase, 60 Hz.

E. Accessories: Include flexible hose connections, inlet strainer, and relief valve.

F. Operation: Manual or Automatic with pressure switch actuation.

PART 3 EXECUTION

3.01 INSTALLATION

A. Install in accordance with referenced NFPA design and installation standard.

B. Install equipment in accordance with manufacturer's instructions.

C. Place pipe runs to minimize obstruction to other work.

D. Place piping in concealed spaces above finished ceilings.

E. Center sprinklers in two directions in ceiling tile and provide piping offsets as required.

F. Apply masking tape or paper cover to ensure concealed sprinklers, cover plates, and sprinkler escutcheons do not receive field paint finish. Remove after painting. Replace painted sprinklers.

G. Install and connect to fire pump system in accordance with Section 21 30 00.

H. Flush entire piping system of foreign matter.

I. Install guards on sprinklers where indicated.

J. Hydrostatically test entire system.

K. Require test be witnessed by Fire Marshal and authority having jurisdiction.

3.02 INTERFACE WITH OTHER PRODUCTS

A. Ensure required devices are installed and connected as required to fire alarm system.

END OF SECTION

SECTION 22 05 16

EXPANSION FITTINGS AND LOOPS FOR PLUMBING PIPING

PART 1 GENERAL

1.01 SECTION INCLUDES

A. Flexible pipe connectors.

B. Expansion joints and compensators.

C. Pipe loops, offsets, and swing joints.

1.02 RELATED REQUIREMENTS

A. Section 21 05 00 - Common Work Results for Fire Suppression.

B. Section 22 10 05 - Plumbing Piping.

1.03 REFERENCE STANDARDS

A. ASTM A269 - Standard Specification for Seamless and Welded Austenitic Stainless Steel Tubing for General Service.

B. EJMA (STDS) - EJMA Standards; Expansion Joint Manufacturers Association.

1.04 SUBMITTALS

A. Product Data:
   1. Flexible Pipe Connectors: Indicate maximum temperature and pressure rating, face-to-face length, live length, hose wall thickness, hose convolutions per foot and per assembly, fundamental frequency of assembly, braid structure, and total number of wires in braid.
   2. Expansion Joints: Indicate maximum temperature and pressure rating, and maximum expansion compensation.

B. Design Data: Indicate selection calculations.

C. Manufacturer's Instructions: Indicate manufacturer's installation instructions, special procedures, and external controls.

D. Project Record Documents: Record installed locations of flexible pipe connectors, expansion joints, anchors, and guides.

E. Maintenance Data: Include adjustment instructions.

1.05 REGULATORY REQUIREMENTS

A. Conform to UL or Warnock Hersey requirements.

1.06 EXTRA MATERIALS

A. Supply two sets of packing for each packed expansion joint.

PART 2 PRODUCTS

2.01 FLEXIBLE PIPE CONNECTORS - STEEL PIPING

A. Manufacturers:
   1. Mercer Rubber Company: www.mercer-rubber.com.

2. Metraflex Company: www.metraflex.com.
3. Substitutions: See Section 01 60 00 - Product Requirements.

B. Inner Hose: Carbon Steel, Stainless Steel or Bronze.

C. Exterior Sleeve: Single braided or Double braided, stainless steel or bronze.

D. Exterior Sleeve: None.

E. Pressure Rating: 125 psi and 450 degrees F or 200 psi and 250 degrees F.

F. Joint: As specified for pipe joints.

G. Size: Use pipe sized units.

H. Maximum offset: 3/4 inch on each side of installed center line.

2.02 FLEXIBLE PIPE CONNECTORS - COPPER PIPING

A. Manufacturer:
1. Mercer Rubber Company: www.mercer-rubber.com.
2. Metraflex Company: www.metraflex.com.
3. Substitutions: See Section 01 60 00 - Product Requirements.

B. Inner Hose: Bronze.

C. Exterior Sleeve: Braided bronze.

D. Pressure Rating: 125 psi and 450 degrees F or 200 psi and 250 degrees F.

E. Joint: As specified for pipe joints.

F. Size: Use pipe sized units.

G. Maximum offset: 3/4 inch on each side of installed center line.

H. Application: Copper piping.

2.03 EXPANSION JOINTS - STEEL WITH PACKED SLIDING SLEEVE

A. Working Pressure and Temperature: Class 150 or Class 300.

B. Joint: As specified for pipe joints.

C. Size: Use pipe sized units.

D. Application: Steel piping 2 inches and over.

2.04 EXPANSION JOINTS - COPPER WITH PACKED SLIDING SLEEVE

A. Working Pressure: 125 psi.

B. Maximum Temperature: 250 degrees F.

C. Joint: As specified for pipe joints.

D. Size: Use pipe sized units.

E. Application: Copper or steel piping 2 inches and over.

2.05 ACCESSORIES

A. Stainless Steel Pipe: ASTM A269.

B. Pipe Alignment Guides:
   1. Two piece welded steel with enamel paint, bolted, with spider to fit standard pipe, frame with four mounting holes, clearance for minimum 1 inch thick insulation, minimum 3 inches travel.

C. Swivel Joints:
   1. Fabricated steel, Bronze, Ductile Iron or Cast steel body, double ball bearing race, field lubricated, with rubber (Buna-N) o-ring seals.

PART 3 EXECUTION

3.01 INSTALLATION

A. Install in accordance with manufacturer's instructions.

B. Install in accordance with EJMA (Expansion Joint Manufacturers Association) Standards.

C. Install flexible pipe connectors on pipes connected to vibration isolated equipment. Provide line size flexible connectors.

D. Install flexible connectors at right angles to displacement. Install one end immediately adjacent to isolated equipment and anchor other end. Install in horizontal plane unless indicated otherwise.

E. Anchor pipe to building structure where indicated. Provide pipe guides so movement is directed along axis of pipe only. Erect piping such that strain and weight is not on cast connections or apparatus.

F. Provide support and equipment required to control expansion and contraction of piping. Provide loops, pipe offsets, and swing joints, or expansion joints where required.

G. Substitute grooved piping for vibration isolated equipment instead of flexible connectors. Grooved piping need not be anchored.

END OF SECTION

SECTION 22 05 19

METERS AND GAGES FOR PLUMBING PIPING

PART 1 GENERAL

1.01 SECTION INCLUDES

A. Positive displacement meters.

B. Pressure gages and pressure gage taps.

C. Thermometers and thermometer wells.

D. Static pressure gages.

E. Filter gages.

1.02 REFERENCE STANDARDS

A. ASME B40.100 - Pressure Gauges and Gauge Attachments; The American Society of Mechanical Engineers.

B. ASME MFC-3M - Measurement of Fluid Flow in Pipes Using Orifice, Nozzle and Venturi; The American Society of Mechanical Engineers.

C. ASTM E1 - Standard Specification for ASTM Liquid-in-Glass Thermometers.

D. ASTM E77 - Standard Test Method for Inspection and Verification of Thermometers.

E. AWWA C700 - Cold Water Meters -- Displacement Type, Bronze Main Case; American Water Works Association (ANSI/AWWA C700).

F. AWWA C701 - Cold Water Meters -- Turbine Type, for Customer Service; American Water Works Association.

G. AWWA C702 - Cold Water Meters -- Compound Type; American Water Works Association.

H. AWWA C706 - Direct-Reading, Remote-Registration Systems for Cold Water Meters; American Water Works Association (ANSI/AWWA C706).

I. AWWA M6 - Water Meters -- Selection, Installation, Testing, and Maintenance; American Water Works Association.

J. UL 393 - Indicating Pressure Gauges for Fire-Protection Service; Underwriters Laboratories Inc..

1.03 SUBMITTALS

A. Product Data: Provide list that indicates use, operating range, total range and location for manufactured components.

B. Project Record Documents: Record actual locations of components and instrumentation.

C. Operation and Maintenance Data:.

1.04 FIELD CONDITIONS

A. Do not install instrumentation when areas are under construction, except for required rough-in, taps, supports and test plugs.

1.05 EXTRA MATERIALS

A. Supply two bottles of red gage oil for static pressure gages.

B. Supply two pressure gages with pulsation damper or dial thermometers.

PART 2 PRODUCTS

2.01 PRESSURE GAGES

A. Manufacturers:
   1. Dwyer Instruments, Inc: www.dwyer-inst.com.
   2. Moeller Instrument Co., Inc: www.moellerinstrument.com.
   3. Omega Engineering, Inc: www.omega.com.

B. Pressure Gages: ASME B40.100, UL 393 drawn steel case, phosphor bronze bourdon tube, rotary brass movement, brass socket, with front recalibration adjustment, black scale on white background.
   1. Case: Steel with brass bourdon tube.
   2. Size: 4-1/2 inch diameter.
   3. Size: 2 inch diameter.
   4. Mid-Scale Accuracy: One percent.
   5. Scale: Psi.

2.02 PRESSURE GAGE TAPPINGS

A. Gage Cock: Tee or lever handle, brass for maximum 150 psi.

B. Needle Valve: Brass or Stainless Steel, 1/4 inch NPT for minimum 150 psi.

C. Pulsation Damper: Pressure snubber, brass with 1/4 inch connections.

D. Syphon: Steel, Schedule 40, 1/4 inch angle or straight pattern.

2.03 STEM TYPE THERMOMETERS

A. Manufacturers:
   1. Dwyer Instruments, Inc: www.dwyer-inst.com.
   2. Omega Engineering, Inc: www.omega.com.
   3. Weksler Glass Thermometer Corp: www.wekslerglass.com.
   4. Substitutions: See Section 01 60 00 - Product Requirements.

B. Thermometers - Fixed Mounting: Red- or blue-appearing non-toxic liquid in glass; ASTM E1; lens front tube, cast aluminum case with enamel finish.
   1. Size: 9 inch scale.
   2. Window: Clear Lexan.
   3. Size: 9 inch scale.
   4. Window: Clear glass or Lexan.
   5. Accuracy: 2 percent, per ASTM E77.
   6. Calibration: Degrees F.

C. Thermometers - Adjustable Angle: Red- or blue-appearing non-toxic liquid in glass; ASTM E1; lens front tube, cast aluminum case with enamel finish, cast aluminum adjustable joint with positive locking device; adjustable 360 degrees in horizontal plane, 180 degrees in vertical plane.
   1. Size: 9 inch scale.
   2. Window: Clear Lexan.
   3. Size: 9 inch scale.
   4. Window: Clear glass or Lexan.
   5. Stem: 3/4 inch NPT brass.

6. Accuracy: 2 percent, per ASTM E77.
7. Calibration: Degrees F.

2.04 THERMOMETER SUPPORTS

A. Socket: Brass separable sockets for thermometer stems with or without extensions as required, and with cap and chain.

B. Flange: 3 inch outside diameter reversible flange, designed to fasten to sheet metal air ducts, with brass perforated stem.

2.05 TEST PLUGS

A. Test Plug: 1/4 inch or 1/2 inch brass or stainless steel fitting and cap for receiving 1/8 inch outside diameter pressure or temperature probe with Nordel core for temperatures up to 350 degrees F.

B. Test Kit: Carrying case, internally padded and fitted containing one 2-1/2 inch diameter pressure gages, one gage adapters with 1/8 inch probes, two 1 inch dial thermometers.

PART 3 EXECUTION

3.01 INSTALLATION

A. Install in accordance with manufacturer's instructions.

B. Install positive displacement meters with isolating valves on inlet and outlet to AWWA M6. Provide full line size valved bypass with globe valve for liquid service meters.

C. Provide one pressure gage per pump, installing taps before strainers and on suction and discharge of pump. Pipe to gage.

D. Install pressure gages with pulsation dampers. Provide gage cock or needle valve to isolate each gage. Extend nipples and siphons to allow clearance from insulation.

E. Install thermometers in piping systems in sockets in short couplings. Enlarge pipes smaller than 2-1/2 inch for installation of thermometer sockets. Ensure sockets allow clearance from insulation.

F. Install thermometer sockets adjacent to controls systems thermostat, transmitter, or sensor sockets. Refer to Section 23 09 43.

G. Coil and conceal excess capillary on remote element instruments.

H. Provide instruments with scale ranges selected according to service with largest appropriate scale.

I. Install gages and thermometers in locations where they are easily read from normal operating level. Install vertical to 45 degrees off vertical.

J. Adjust gages and thermometers to final angle, clean windows and lenses, and calibrate to zero.

K. Locate test plugs adjacent thermometers and thermometer sockets, adjacent to pressure gages and pressure gage taps, adjacent to control device sockets or where indicated.

3.02 SCHEDULES

A. Positive Displacement Meters, Location:
1. Domestic cold water.
2. Expansion tank make-up.

B. Pressure Gages, Location and Scale Range:
   1. Pumps, 0 to 100 psi.
   2. Expansion tanks, 0 to 100 psi.
   3. Sprinkler system, 0 to 100 psi.
   4. Backflow preventers, 0 to 100 psi.

C. Pressure Gage Tappings, Location:
   1. Control valves 3/4 inch & larger - inlets and outlets.
   2. Major coils - inlets and outlets.
   3. Heat exchangers - inlets and outlets.

D. Stem Type Thermometers, Location and Scale Range:
   1. Domestic hot water supply and recirculation, 0 to 220 degrees F.

END OF SECTION

SECTION 22 05 53

IDENTIFICATION FOR PLUMBING PIPING AND EQUIPMENT

PART 1 GENERAL

1.01 SECTION INCLUDES

A. Nameplates.

B. Tags.

C. Stencils.

D. Pipe Markers.

1.02 RELATED REQUIREMENTS

A. Section 09 90 00 - Painting and Coating: Identification painting.

B. Section 22 60 05 - Medical Air, Gas, and Vacuum Systems: Supply of pipe labels for placement under this section.

1.03 REFERENCE STANDARDS

A. ASME A13.1 - Scheme for the Identification of Piping Systems; The American Society of Mechanical Engineers.

1.04 SUBMITTALS

A. List: Submit list of wording, symbols, letter size, and color coding for mechanical identification.

B. Chart and Schedule: Submit valve chart and schedule, including valve tag number, location, function, and valve manufacturer's name and model number.

C. Product Data: Provide manufacturers catalog literature for each product required.

D. Samples: Submit two labels; tags in size.

E. Manufacturer's Installation Instructions: Indicate special procedures, and installation.

F. Project Record Documents: Record actual locations of tagged valves.

PART 2 PRODUCTS

2.01 MANUFACTURERS

A. Brady Corporation: www.bradycorp.com.

B. Champion America, Inc: www.Champion-America.com.

C. Seton Identification Products: www.seton.com/aec.

D. Substitutions: See Section 01 60 00 - Product Requirements.

2.02 NAMEPLATES

A. Description: Laminated three-layer plastic with engraved letters.
   1. Letter Color: Black.
   2. Letter Height: 1/2 inch.
   3. Background Color: Yellow.

2.03 TAGS

A. Plastic Tags: Laminated three-layer plastic with engraved black letters on light contrasting background color. Tag size minimum 1-1/2 inch diameter or square.

B. Metal Tags: Brass, aluminum, or stainless steel with stamped letters; tag size minimum 1-1/2 inch diameter or square with smooth edges.

C. Chart: Typewritten letter size list in anodized aluminum frame.

2.04 STENCILS

A. Stencils: With clean cut symbols and letters of following size:
   1. 3/4 to 1-1/4 inch Outside Diameter of Insulation or Pipe: 8 inch long color field, 1/2 inch high letters.
   2. 1-1/2 to 2 inch Outside Diameter of Insulation or Pipe: 8 inch long color field, 3/4 inch high letters.
   3. 2-1/2 to 6 inch Outside Diameter of Insulation or Pipe: 12 inch long color field, 1-1/4 inch high letters.
   4. 8 to 10 inch Outside Diameter of Insulation or Pipe: 24 inch long color field, 2-1/2 inch high letters.
   5. Over 10 inch Outside Diameter of Insulation or Pipe: 32 inch long color field, 3-1/2 inch high letters.
   6. Ductwork and Equipment: 2-1/2 inch high letters.

B. Stencil Paint: As specified in Section 09 90 00, semi-gloss enamel, colors conforming to ASME A13.1.

2.05 PIPE MARKERS

A. Comply with ASME A13.1.

B. Plastic Pipe Markers: Factory fabricated, flexible, semi- rigid plastic, preformed to fit around pipe or pipe covering; minimum information indicating flow direction arrow and identification of fluid being conveyed.

C. Plastic Tape Pipe Markers: Flexible, vinyl film tape with pressure sensitive adhesive backing and printed markings.

D. Underground Plastic Pipe Markers: Bright colored continuously printed plastic ribbon tape, minimum 6 inches wide by 4 mil thick, manufactured for direct burial service.

2.06 CEILING TACKS

A. Description: Steel with 3/4 inch diameter color coded head.

B. Color code as follows:
   1. HVAC Equipment: Yellow.
   2. Fire Dampers and Smoke Dampers: Red.
   3. Plumbing Valves: Green.
   4. Heating/Cooling Valves: Blue.

PART 3 EXECUTION

3.01 PREPARATION

A. Degrease and clean surfaces to receive adhesive for identification materials.

B. Prepare surfaces in accordance with Section 09 90 00 for stencil painting.

3.02 INSTALLATION

A. Install plastic nameplates with corrosive-resistant mechanical fasteners, or adhesive. Apply with sufficient adhesive to ensure permanent adhesion and seal with clear lacquer.

B. Install tags with corrosion resistant chain.

C. Apply stencil painting in accordance with Section 09 90 00.

D. Install plastic pipe markers in accordance with manufacturer's instructions.

E. Install plastic tape pipe markers complete around pipe in accordance with manufacturer's instructions.

F. Install underground plastic pipe markers 6 to 8 inches below finished grade, directly above buried pipe.

G. Identify air handling units, pumps, heat transfer equipment, tanks, and water treatment devices with plastic nameplates or stencil painting. Small devices, such as in-line pumps, may be identified with tags.

H. Identify control panels and major control components outside panels with plastic nameplates.

I. Identify thermostats relating to terminal boxes or valves with nameplates.

J. Identify valves in main and branch piping with tags.

K. Identify air terminal units and radiator valves with numbered tags.

L. Tag automatic controls, instruments, and relays. Key to control schematic.

M. Identify piping, concealed or exposed, with plastic pipe markers or plastic tape pipe markers. Use tags on piping 3/4 inch diameter and smaller. Identify service, flow direction, and pressure. Install in clear view and align with axis of piping. Locate identification not to exceed 20 feet on straight runs including risers and drops, adjacent to each valve and Tee, at each side of penetration of structure or enclosure, and at each obstruction.

N. Identify ductwork with plastic nameplates or stenciled painting. Identify with air handling unit identification number and area served. Locate identification at air handling unit, at each side of penetration of structure or enclosure, and at each obstruction.

O. Locate ceiling tacks to locate valves or dampers above lay-in panel ceilings. Locate in corner of panel closest to equipment.

END OF SECTION

SECTION 22 07 16

PLUMBING EQUIPMENT INSULATION

PART 1 GENERAL

1.01 SECTION INCLUDES

A. Equipment insulation.

B. Covering.

C. Breeching insulation.

1.02 RELATED REQUIREMENTS

A. Section 09 90 00 - Painting and Coating: Painting insulation covering.

B. Section 22 05 53 - Identification for Plumbing Piping and Equipment.

C. Section 22 10 05 - Plumbing Piping: Placement of hangers and hanger inserts.

D. Section 23 21 13 - Hydronic Piping: Placement of hangers and hanger inserts.

E. Section 23 21 14 - Hydronic Specialties.

1.03 REFERENCE STANDARDS

A. ASTM A666 - Standard Specification for Annealed or Cold-Worked Austenitic Stainless Steel Sheet, Strip, Plate, and Flat Bar.

B. ASTM B209 - Standard Specification for Aluminum and Aluminum-Alloy Sheet and Plate.

C. ASTM B209M - Standard Specification for Aluminum and Aluminum-Alloy Sheet and Plate [Metric].

D. ASTM C177 - Standard Test Method for Steady-State Heat Flux Measurements and Thermal Transmission Properties by Means of the Guarded-Hot-Plate Apparatus.

E. ASTM C195 - Standard Specification for Mineral Fiber Thermal Insulating Cement.

F. ASTM C518 - Standard Test Method for Steady-State Thermal Transmission Properties by Means of the Heat Flow Meter Apparatus.

G. ASTM C592 - Standard Specification for Mineral Fiber Blanket Insulation and Blanket-Type Pipe Insulation (Metal-Mesh Covered) (Industrial Type).

H. ASTM E84 - Standard Test Method for Surface Burning Characteristics of Building Materials.

I. ASTM E96/E96M - Standard Test Methods for Water Vapor Transmission of Materials.

J. NFPA 255 - Standard Method of Test of Surface Burning Characteristics of Building Materials; National Fire Protection Association.

K. UL 723 - Standard for Test for Surface Burning Characteristics of Building Materials; Underwriters Laboratories Inc..

1.04 SUBMITTALS

A. See Gilbane Project Manual.

B. Product Data: Provide product description, thermal characteristics, list of materials and thickness for equipment scheduled.

C. Samples: Submit two samples of any representative size illustrating each insulation type.

D. Manufacturer's Instructions: Indicate installation procedures that ensure acceptable workmanship and installation standards will be achieved.

1.05 QUALITY ASSURANCE

A. Manufacturer Qualifications: Company specializing in manufacturing the products specified in this section with not less than three years of experience.

B. Applicator Qualifications: Company specializing in performing the type of work specified in this section with minimum three years of experience and approved by manufacturer.

1.06 DELIVERY, STORAGE, AND HANDLING

A. Accept materials on site in original factory packaging, labeled with manufacturer's identification, including product density and thickness.

B. Protect insulation from weather and construction traffic, dirt, water, chemical, and mechanical damage, by storing in original wrapping.

1.07 FIELD CONDITIONS

A. Maintain ambient temperatures and conditions required by manufacturers of adhesives, mastics, and insulation cements.

B. Maintain temperature during and after installation for minimum period of 24 hours.

PART 2 PRODUCTS

2.01 REQUIREMENTS FOR ALL PRODUCTS OF THIS SECTION

A. Surface Burning Characteristics: Flame spread/Smoke developed index of 25/50, maximum, when tested in accordance with ASTM E84, NFPA 255, or UL 723.

2.02 GLASS FIBER, FLEXIBLE

A. Manufacturers:
   1. Knauf Insulation; : www.knaufusa.com.
   2. Johns Manville Corporation; : www.jm.com.
   3. Owens Corning Corp; : www.owenscorning.com.
   4. CertainTeed Corporation; : www.certainteed.com.
   5. Substitutions: See Section 01 60 00 - Product Requirements.

B. Insulation: ASTM C553; flexible, noncombustible.
   1. 'K' Value: 0.36 at 75 degrees F, when tested in accordance with ASTM C177 or ASTM C518.
   2. Maximum Service Temperature: 450 degrees F, 850 degrees F, 1000 degrees F or 1200 degrees F.
   3. Maximum Water Vapor Sorption: 5.0 percent by weight.

C. Vapor Barrier Jacket: Kraft paper reinforced with glass fiber yarn and bonded to aluminized film or Vinyl.
   1. Moisture Vapor Permeability: 0.02 perm inch, when tested in accordance with ASTM E96/E96M.
   2. Secure with self-sealing longitudinal laps and butt strips.

3. Secure with outward clinch expanding staples and vapor barrier mastic.

D. Tie Wire: 0.048 inch stainless steel with twisted ends on maximum 12 inch centers.

E. Vapor Barrier Lap Adhesive:
1. Compatible with insulation.

F. Insulating Cement/Mastic:
1. ASTM C195; hydraulic setting on mineral wool.

2.03 GLASS FIBER, RIGID

A. Manufacturer:
1. Knauf Insulation: www.knaufusa.com.
2. Johns Manville Corporation: www.jm.com.
3. Owens Corning Corp: www.owenscorning.com.
4. CertainTeed Corporation; www.certainteed.com.
5. Substitutions: See Section 01 60 00 - Product Requirements.

B. Insulation: ASTM C612 or ASTM C592; rigid, noncombustible.
1. 'K' Value: 0.25 at 75 degrees F, when tested in accordance with ASTM C177 or ASTM C518.
2. Maximum Service Temperature: 850 degrees F or 1200 degrees F.
3. Maximum Water Vapor Sorption: 5.0 percent by weight.
4. Maximum Density: 8.0 lb/cu ft or 12.0 lb/cu ft.

C. Vapor Barrier Jacket:
1. Kraft paper reinforced with glass fiber yarn and bonded to aluminized film or Vinyl.
2. Moisture Vapor Permeability: 0.02 perm inch, when tested in accordance with ASTM E96/E96M.
3. Secure with self-sealing longitudinal laps and butt strips.
4. Secure with outward clinch expanding staples and vapor barrier mastic.

D. Facing: 1 inch galvanized steel hexagonal wire mesh stitched on one face of insulation.

E. Vapor Barrier Lap Adhesive:
1. Compatible with insulation.

F. Insulating Cement/Mastic:
1. ASTM C195; hydraulic setting on mineral wool.

2.04 CELLULAR GLASS

A. Manufacturer:
1. Pittsburgh Corning Corporation: www.foamglasinsulation.com.
2. Substitutions: See Gilbane Project Manual.

B. Insulation: ASTM C552, Grade 2.
1. 'K' Value: 0.41 at 100 degrees F.
2. Service Temperature: Up to 900 degrees F.
3. Water Vapor Permeability: 0.005 perm inch.
4. Water Absorption: 0.2 percent by volume, maximum.
5. Density: Minimum 6.80 lb/cu ft.

2.05 FLEXIBLE ELASTOMERIC CELLULAR INSULATION

A. Manufacturer:
1. Armacell International: www.armacell.com.

B. Insulation: Preformed flexible elastomeric cellular rubber insulation complying with ASTM C 534 Grade 3, Grad 2 or Grade 1, in sheet form.
   1. Minimum Service Temperature: -40 degrees F.
   2. Maximum Service Temperature: 220 degrees F.
   3. Connection: Waterproof vapor barrier adhesive.

C. Elastomeric Foam Adhesive: Air dried, contact adhesive, compatible with insulation.

2.06 JACKETS

A. PVC Plastic:
   1. Manufacturers:
      a. Johns Manville Corporation: www.jm.com.
      b. Substitutions: See Gilbane Project Manual.
   2. Jacket: Sheet material, off-white color.
      a. Minimum Service Temperature: -40 degrees F.
      b. Maximum Service Temperature: 150 degrees F.
      c. Moisture Vapor Permeability: 0.02 perm inch, when tested in accordance with ASTM E96/E96M.
      d. Thickness: 10 mil.
      e. Connections: Brush on welding adhesive or Pressure sensitive color matching vinyl tape.
   3. Covering Adhesive Mastic:
      a. Compatible with insulation.

B. Canvas Jacket: UL listed 6 oz/sq yd plain weave cotton fabric treated with dilute fire retardant lagging adhesive.
   1. Lagging Adhesive:
      a. Compatible with insulation.

C. Aluminum Jacket: ASTM B209 (ASTM B209M) formed aluminum sheet.
   1. Thickness: 0.016 inch, 0.020 inch, 0.025 inch, 0.032 inch or 0.040 inch sheet.
   2. Finish: Smooth.
   3. Joining: Longitudinal slip joints and 2 inch laps.
   4. Metal Jacket Bands: 3/8 inch wide; 0.015 inch thick aluminum.
   5. Metal Jacket Bands: 3/8 inch wide; 0.010 inch thick stainless steel.

D. Stainless Steel Jacket: ASTM A666, Type 304 stainless steel.
   1. Thickness: 0.010 inch, 0.016 inch or 0.018 inch.
   2. Finish: Smooth.
   3. Metal Jacket Bands: 3/8 inch wide; 0.010 inch thick stainless steel.

PART 3 EXECUTION

3.01 EXAMINATION

A. Verify that equipment has been tested before applying insulation materials.

B. Verify that surfaces are clean and dry, with foreign material removed.

3.02 INSTALLATION

A. Install in accordance with manufacturer's instructions.

B. Factory Insulated Equipment: Do not insulate.

C. Exposed Equipment: Locate insulation and cover seams in least visible locations.

D. Apply insulation close to equipment by grooving, scoring, and beveling insulation. Fasten insulation to equipment with studs, pins, clips, adhesive, wires, or bands.

E. Fill joints, cracks, seams, and depressions with bedding compound to form smooth surface. On cold equipment, use vapor barrier cement.

F. Insulated equipment containing fluids below ambient temperature: Insulate entire system.

G. Fiber glass insulated equipment containing fluids below ambient temperature: Provide vapor barrier jackets, factory-applied or field-applied. Finish with glass cloth and vapor barrier adhesive.

H. For hot equipment containing fluids 140 degrees F or less, do not insulate flanges and unions, but bevel and seal ends of insulation.

I. For hot equipment containing fluids over 140 degrees F, insulate flanges and unions with removable sections and jackets.

J. Fiber glass insulated equipment containing fluids above ambient temperature: Provide standard jackets, with or without vapor barrier, factory-applied or field-applied. Finish with glass cloth and adhesive.

K. Inserts and Shields:
   1. Application: Equipment 1-1/2 inches diameter or larger.
   2. Shields: Galvanized steel or Steel between hangers and inserts.
   3. Insert location: Between support shield and equipment and under the finish jacket.
   4. Insert configuration: Minimum 6 inches long, of same thickness and contour as adjoining insulation; may be factory fabricated.
   5. Insert material: Hydrous calcium silicate insulation or other heavy density insulating material suitable for the planned temperature range.

L. Finish insulation at supports, protrusions, and interruptions.

M. Nameplates and ASME Stamps: Bevel and seal insulation around; do not insulate over.

N. Equipment Requiring Access for Maintenance, Repair, or Cleaning: Install insulation so it can be easily removed and replaced without damage.

3.03 SCHEDULES

A. Equipment: Domestic hot-water storage tanks, solar hot water tanks, heat exchangers, and expansion tanks, not factory insulated.
   1. Operating Temperature: 55 to 140 degrees F.
   2. Insulation Material: Glass Fiber
   3. Insulation Thickness: 2 inch.
   4. Field-Applied Jacket: PVC
   5. Vapor Retarder Required: No
   6. Finish: None.

END OF SECTION

SECTION 22 07 19

PLUMBING PIPING INSULATION

PART 1 GENERAL

1.01 SECTION INCLUDES

A. Piping insulation.

B. Jackets and accessories.

1.02 RELATED REQUIREMENTS

A. Section 07 84 00 - Firestopping.

B. Section 22 10 05 - Plumbing Piping: Placement of hangers and hanger inserts.

1.03 REFERENCE STANDARDS

A. ASTM A666 - Standard Specification for Annealed or Cold-Worked Austenitic Stainless Steel Sheet, Strip, Plate, and Flat Bar.

B. ASTM B209 - Standard Specification for Aluminum and Aluminum-Alloy Sheet and Plate.

C. ASTM B209M - Standard Specification for Aluminum and Aluminum-Alloy Sheet and Plate [Metric].

D. ASTM C177 - Standard Test Method for Steady-State Heat Flux Measurements and Thermal Transmission Properties by Means of the Guarded Hot Plate Apparatus.

E. ASTM C195 - Standard Specification for Mineral Fiber Thermal Insulating Cement.

F. ASTM C449 - Standard Specification for Mineral Fiber Hydraulic-Setting Thermal Insulating and Finishing Cement.

G. ASTM C518 - Standard Test Method for Steady-State Thermal Transmission Properties by Means of the Heat Flow Meter Apparatus.

H. ASTM C534/C534M - Standard Specification for Preformed Flexible Elastomeric Cellular Thermal Insulation in Sheet and Tubular Form.

I. ASTM C547 - Standard Specification for Mineral Fiber Pipe Insulation.

J. ASTM C552 - Standard Specification for Cellular Glass Thermal Insulation.

K. ASTM C578 - Standard Specification for Rigid, Cellular Polystyrene Thermal Insulation.

L. ASTM C585 - Standard Practice for Inner and Outer Diameters of Rigid Thermal Insulation for Nominal Sizes of Pipe and Tubing (NPS System).

M. ASTM C591 - Standard Specification for Unfaced Preformed Rigid Cellular Polyisocyanurate Thermal Insulation.

N. ASTM C795 - Standard Specification for Thermal Insulation for Use in Contact with Austenitic Stainless Steel.

O. ASTM D1056 - Standard Specification for Flexible Cellular Materials--Sponge or Expanded Rubber.

P. ASTM D2842 - Standard Test Method for Water Absorption of Rigid Cellular Plastics.

Q. ASTM E84 - Standard Test Method for Surface Burning Characteristics of Building Materials.

R. ASTM E96/E96M - Standard Test Methods for Water Vapor Transmission of Materials.

S. NFPA 255 - Standard Method of Test of Surface Burning Characteristics of Building Materials; National Fire Protection Association.

T. UL 723 - Standard for Test for Surface Burning Characteristics of Building Materials; Underwriters Laboratories Inc..

1.04 SUBMITTALS

A. Product Data: Provide product description, thermal characteristics, list of materials and thickness for each service, and locations.

B. Samples: Submit two samples of any representative size illustrating each insulation type.

C. Manufacturer's Instructions: Indicate installation procedures that ensure acceptable workmanship and installation standards will be achieved.

1.05 QUALITY ASSURANCE

A. Manufacturer Qualifications: Company specializing in manufacturing the Products specified in this section with not less than three years of experience.

B. Applicator Qualifications: Company specializing in performing the type of work specified in this section with minimum 3 years of experience, or and approved by manufacturer.

1.06 DELIVERY, STORAGE, AND HANDLING

A. Accept materials on site, labeled with manufacturer's identification, product density, and thickness.

1.07 FIELD CONDITIONS

A. Maintain ambient conditions required by manufacturers of each product.

B. Maintain temperature before, during, and after installation for minimum of 24 hours.

PART 2 PRODUCTS

2.01 REQUIREMENTS FOR ALL PRODUCTS OF THIS SECTION

A. Surface Burning Characteristics: Flame spread/Smoke developed index of 25/50, maximum, when tested in accordance with ASTM E84, NFPA 255, or UL 723.

2.02 GLASS FIBER

A. Manufacturers:
   1. Knauf Insulation: www.knaufusa.com.
   2. Johns Manville Corporation: www.jm.com.
   3. Owens Corning Corp: www.owenscorning.com.
   4. CertainTeed Corporation; : www.certainteed.com.
   5. Substitutions: See Gilbane Project Manual.

B. Insulation: ASTM C547 and ASTM C795; rigid molded, noncombustible.
   1. 'K' value: ASTM C177, 0.24 at 75 degrees F.
   2. Maximum service temperature: 850 degrees F; 1200 degrees F; 1600 degrees F.
   3. Maximum moisture absorption: 0.2 percent by volume.

C. Insulation: ASTM C547; semi-rigid, noncombustible, end grain adhered to jacket.

1. 'K' value: ASTM C177, 0.24 at 75 degrees F.
2. Maximum service temperature: 650 degrees F.
3. Maximum moisture absorption: 0.2 percent by volume.

D. Vapor Barrier Jacket: White Kraft paper with glass fiber yarn, bonded to aluminized film; moisture vapor transmission when tested in accordance with ASTM E96/E96M of 0.02 perm-inches.

E. Tie Wire: 0.048 inch stainless steel with twisted ends on maximum 12 inch centers.

F. Vapor Barrier Lap Adhesive:
1. Compatible with insulation.

G. Insulating Cement/Mastic:
1. ASTM C195; hydraulic setting on mineral wool.

H. Fibrous Glass Fabric:
1. Cloth: Untreated; 9 oz/sq yd weight.
2. Blanket: 1.0 lb/cu ft density.
3. Weave: 5x5; 10x10; or 10x20.

I. Indoor Vapor Barrier Finish:
1. Cloth: Untreated; 9 oz/sq yd weight.
2. Vinyl emulsion type acrylic, compatible with insulation, black or white color.

J. Outdoor Vapor Barrier Mastic:
1. Vinyl emulsion type acrylic or mastic, compatible with insulation, black color.

K. Outdoor Breather Mastic:
1. Vinyl emulsion type acrylic or mastic, compatible with insulation, black color.

L. Insulating Cement:
1. ASTM C449/C449M.

2.03 CELLULAR GLASS

A. Manufacturers:
1. Pittsburgh Corning Corporation: www.foamglasinsulation.com.
2. Substitutions: See Section 01 60 00 - Product Requirements.

B. Insulation: ASTM C552, Grade 1.
1. 'K' value: 0.37 at 100 degrees F.
2. Service Temperature: Up to 900 degrees F.
3. Water Vapor Permeability: 0.005 perm inch.
4. Water Absorption: 0.2 percent by volume, maximum.

2.04 EXPANDED POLYSTYRENE

A. Manufacturers:

B. Insulation: ASTM C578; rigid closed cell.
1. 'K' value: 0.23 at 75 degrees F.
2. Maximum service temperature: 165 degrees F.
3. Maximum water vapor permeance: 5.0 perms

2.05 EXPANDED PERLITE

A. Manufacturers:
1. Schundler Company: www.schundler.com.

B. Insulation: ASTM C610, molded.
   1. Maximum service temperature: 1200 degrees F.
   2. Maximum water vapor transmission: 0.1 perm.

2.06 POLYISOCYANURATE CELLULAR PLASTIC

A. Insulation Material: ASTM C591, rigid molded modified polyisocyanurate cellular plastic.
   1. Dimension: Comply with requirements of ASTM C585.
   2. 'K' value: 0.18 at 75 degrees F, when tested in accordance with ASTM C518.
   3. Minimum Service Temperature: -70 degrees F.
   4. Maximum Service Temperature: 300 degrees F.
   5. Water Absorption: 0.5 percent by volume, maximum, when tested in accordance with ASTM D2842..
   6. Moisture Vapor Transmission: 4.0 perm in.
   7. Connection: Waterproof vapor barrier adhesive.

2.07 POLYETHYLENE

A. Manufacturers:
   1. Armacell International: www.armacell.com.

B. Insulation: Flexible closed-cell polyethylene tubing, slit lengthwise for installation, complying with applicable requirements of ASTM D1056.
   1. 'K' value: ASTM C177; 0.25 at 75 degrees F.
   2. Maximum Service Temperature: 200 degrees F.
   3. Density: 2 lb/cu ft.
   4. Maximum Moisture Absorption: 1.0 percent by volume.
   5. Moisture Vapor Permeability: 0.05 perm inch, when tested in accordance with ASTM E96/E96M.
   6. Connection: Contact adhesive.

2.08 FLEXIBLE ELASTOMERIC CELLULAR INSULATION

A. Manufacturer:
   1. Armacell International: www.armacell.com.
   2. Substitutions: See Section 01 60 00 - Product Requirements.

B. Insulation: Preformed flexible elastomeric cellular rubber insulation complying with ASTM C 534 Grade 3;grade 2; grade 1 use molded tubular material wherever possible.
   1. Minimum Service Temperature: -40 degrees F.
   2. Maximum Service Temperature: 220 degrees F.
   3. Connection: Waterproof vapor barrier adhesive.

C. Elastomeric Foam Adhesive: Air dried, contact adhesive, compatible with insulation.

2.09 JACKETS

A. PVC Plastic.
   1. Manufacturers:
      a. Johns Manville Corporation: www.jm.com.
      b. Substitutions: See Section 01 60 00 - Product Requirements.
   2. Jacket: One piece molded type fitting covers and sheet material, off-white color.
      a. Minimum Service Temperature: 0 degrees F.
      b. Maximum Service Temperature: 150 degrees F.
      c. Moisture Vapor Permeability: 0.002 perm inch, maximum, when tested in accordance with ASTM E96/E96M.
      d. Thickness: 20 mil; 30 mil.

e. Connections: Brush on welding adhesive, tacks, pressure sensitive color matching vinyl tape.

3. Covering Adhesive Mastic:

B. ABS Plastic:
1. Jacket: One piece molded type fitting covers and sheet material, off-white color.
a. Minimum Service Temperature: -40 degrees F.
b. Maximum Service Temperature of 180 degrees F.
c. Moisture Vapor Permeability: 0.012 perm inch, when tested in accordance with ASTM E96/E96M.
d. Thickness: 30 mil.
e. Connections: Brush on welding adhesive.

C. Canvas Jacket: UL listed 6 oz/sq yd plain weave cotton fabric treated with dilute fire retardant lagging adhesive.
1. Lagging Adhesive:
a. Compatible with insulation.

D. Aluminum Jacket: ASTM B209 (ASTM B209M) formed aluminum sheet.
1. Thickness: 0.016 inch, 0.020 inch sheet.
2. Finish: Smooth, embossed.
3. Joining: Longitudinal slip joints and 2 inch laps.
4. Fittings: 0.016 inch thick die shaped fitting covers with factory attached protective liner.
5. Metal Jacket Bands: 3/8 inch wide; 0.015 inch thick aluminum.
6. Metal Jacket Bands: 3/8 inch wide; 0.010 inch thick stainless steel.

E. Stainless Steel Jacket: ASTM A 666, Type 304 or 316 stainless steel.
1. Thickness: 0.010 inch.
2. Finish: Smooth.
3. Metal Jacket Bands: 3/8 inch wide; 0.010 inch thick stainless steel.

PART 3 EXECUTION

3.01 EXAMINATION

A. Verify that piping has been tested before applying insulation materials.

B. Verify that surfaces are clean and dry, with foreign material removed.

3.02 INSTALLATION

A. Install in accordance with manufacturer's instructions.

B. Install in accordance with NAIMA National Insulation Standards.

C. Exposed Piping: Locate insulation and cover seams in least visible locations.

D. Insulated pipes conveying fluids below ambient temperature: Insulate entire system including fittings, valves, unions, flanges, strainers, flexible connections, pump bodies, and expansion joints.

E. Glass fiber insulated pipes conveying fluids below ambient temperature:
1. Provide vapor barrier jackets, factory-applied or field-applied. Secure with self-sealing longitudinal laps and butt strips with pressure sensitive adhesive. Secure with outward clinch expanding staples and vapor barrier mastic.
2. Insulate fittings, joints, and valves with molded insulation of like material and thickness as adjacent pipe. Finish with glass cloth and vapor barrier adhesive or PVC fitting covers.

F. For hot piping conveying fluids 140 degrees F or less, do not insulate flanges and unions at equipment, but bevel and seal ends of insulation.

G. For hot piping conveying fluids over 140 degrees F, insulate flanges and unions at equipment.

H. Glass fiber insulated pipes conveying fluids above ambient temperature:
   1. Provide standard jackets, with or without vapor barrier, factory-applied or field-applied. Secure with self-sealing longitudinal laps and butt strips with pressure sensitive adhesive. Secure with outward clinch expanding staples.
   2. Insulate fittings, joints, and valves with insulation of like material and thickness as adjoining pipe. Finish with glass cloth and adhesive or PVC fitting covers.

I. Inserts and Shields:
   1. Application: Piping 1-1/2 inches diameter or larger.
   2. Shields: Galvanized steel between pipe hangers or pipe hanger rolls and inserts.
   3. Insert location: Between support shield and piping and under the finish jacket.
   4. Insert configuration: Minimum 6 inches long, of same thickness and contour as adjoining insulation; may be factory fabricated.
   5. Insert material: Hydrous calcium silicate insulation or other heavy density insulating material suitable for the planned temperature range.

J. Continue insulation through walls, sleeves, pipe hangers, and other pipe penetrations. Finish at supports, protrusions, and interruptions. At fire separations, refer to Section 07 84 00.

K. Pipe Exposed in Mechanical Equipment Rooms or Finished Spaces (less than 10 feet above finished floor): Finish with PVC jacket and fitting covers.

L. Exterior Applications: Provide vapor barrier jacket. Insulate fittings, joints, and valves with insulation of like material and thickness as adjoining pipe, and finish with glass mesh reinforced vapor barrier cement. Cover with aluminum jacket with seams located on bottom side of horizontal piping.

M. Buried Piping: Provide factory fabricated assembly with inner all-purpose service jacket with self-sealing lap, and asphalt impregnated open mesh glass fabric, with one mil thick aluminum foil sandwiched between three layers of bituminous compound; outer surface faced with a polyester film.

N. Heat Traced Piping: Insulate fittings, joints, and valves with insulation of like material, thickness, and finish as adjoining pipe. Size large enough to enclose pipe and heat tracer. Cover with aluminum jacket with seams located on bottom side of horizontal piping.

3.03 SCHEDULES

3.04 INTERIOR INSULATION APPLICATION SCHEDULE

A. Service: Domestic hot, recirculated hot water and solar piping.
   1. Operating Temperature: 60 to 140 deg F.
   2. Insulation Material: Flexible elastomeric or glass fiber.
   3. Insulation Thickness: Apply the following insulation thicknesses:
      a. Pipe, All Sizes: 1.0 inch.
   4. Jacket: None.
   5. Vapor Retarder Required: No.
   6. Finish: None.

B. Service: Domestic cold water.
   1. Operating Temperature: 35 to 60 deg F.
   2. Insulation Material: Flexible elastomeric or glass fiber.
   3. Insulation Thickness: Apply the following insulation thicknesses:

a. Pipe, 1” or less: 0.5 inch.
b. Pipe, 1¼” to 2” : 0.5 inch.
c. Pipe, 2-1/2” to 4”: 1.0 inch.
d. Pipe, 5” and up : 1.0 inch.

4. Jacket: Foil and paper.
5. Vapor Retarder Required: Yes.
6. Finish: None.

C. Service: Rainwater conductors.
1. Operating Temperature: 32 to 100 deg F.
2. Insulation Material: Mineral fiber.
3. Insulation Thickness: Apply the following insulation thicknesses:
a. Pipe, 3” and up: 1.0 inch.
4. Jacket:
a. Concealed Piping - None
b. Exposed Piping - PVC
5. Vapor Retarder Required: Yes.
6. Finish: None.

D. Service: Roof drain bodies.
1. Operating Temperature: 32 to 100 deg F.
2. Insulation Material: Mineral fiber.
3. Insulation Thickness: 1.0 inch.
4. Jacket:
a. Concealed - None
b. Exposed - PVC
5. Vapor Retarder Required: Yes.
6. Finish: None

E. Service: Sanitary waste piping where heat tracing is installed.
1. Operating Temperature: 35 to 100 deg F.
2. Insulation Material: Mineral fiber.
3. Insulation Thickness: Apply the following insulation thicknesses:
a. Pipe, 3” and up: 1.0 inch.
4. Jacket: Aluminum.
5. Vapor Retarder Required: Yes.
6. Finish: None.

F. Service: Condensate drain piping.
1. Operating Temperature: 35 to 75 deg F.
2. Insulation Material: Flexible elastomeric.
3. Insulation Thickness: 0.5 inch.
4. Jacket: None.
5. Vapor Retarder Required: Yes.
6. Finish: None.

G. Service: Exposed sanitary drains and domestic water supplies and stops for fixtures for the disabled.
1. Operating Temperature: 35 to 120 deg F.
2. Insulation Material: Molded closed cell vinyl.
3. Insulation Thickness: 3/16 inch.
4. Vapor Retarder Required: No.
5. Finish: None.

3.05 EXTERIOR INSULATION APPLICATION SCHEDULE

A. This application schedule is for aboveground insulation outside the building. Loose-fill insulation, for belowground piping, is specified in Division 2 piping distribution Sections.

B. Service: Domestic water.
   1. Operating Temperature: 60 to 180 deg F.
   2. Insulation Material: Cellular glass, with jacket
   3. Insulation Thickness: Apply the following insulation thicknesses:
      a. Pipe, 1” or less: 2.0 inch.
      b. Pipe, 1-1/4” and larger: 2.0 inch.
   4. Jacket: Aluminum.
   5. Vapor Retarder Required: No.
   6. Finish: None.

C. Service: Storm water.
   1. Operating Temperature: 32 to 100 deg F.
   2. Insulation Material: Flexible elastomeric.
   3. Insulation Thickness: Apply the following insulation thicknesses:
      a. Pipe, 1-1/4” to 2”: 0.5 inch.
      b. Pipe, 2-1/2” and up: 1.0 inch.
   4. Field-Applied Jacket: Aluminum.
   5. Vapor Retarder Required: Yes.
   6. Finish: None.

END OF SECTION

SECTION 22 10 05

PLUMBING PIPING

PART 1 GENERAL

1.01 SECTION INCLUDES

A. Pipe, pipe fittings, valves, and connections for piping systems.
   1. Sanitary sewer.
   2. Domestic water.
   3. Storm water.
   4. Gas.

1.02 RELATED REQUIREMENTS

A. Section 31 23 16 - Excavation.

B. Section 31 23 23 - Fill.

C. Section 31 23 16.13 - Trenching.

D. Section 33 13 00 - Disinfecting of Water Utility Distribution.

E. Section 07 84 00 - Firestopping.

F. Section 08 31 00 - Access Doors and Panels.

G. Section 09 90 00 - Painting and Coating.

H. Section 22 05 53 - Identification for Plumbing Piping and Equipment.

I. Section 22 07 19 - Plumbing Piping Insulation.

J. Section 26 27 17 - Equipment Wiring: Electrical characteristics and wiring connections.

1.03 REFERENCE STANDARDS

A. ANSI Z21.22 - American National Standard for Relief Valves and Automatic Gas Shutoff Devices for Hot Water Supply Systems.

B. ASME B16.1 - Gray Iron Pipe Flanges and Flanged Fittings: Classes 25, 125, and 250; The American Society of Mechanical Engineers.

C. ASME B16.3 - Malleable Iron Threaded Fittings; The American Society of Mechanical Engineers.

D. ASME B16.4 - Gray Iron Threaded Fittings; The American Society of Mechanical Engineers.

E. ASME B16.18 - Cast Copper Alloy Solder Joint Pressure Fittings; The American Society of Mechanical Engineers (ANSI B16.18).

F. ASME B16.22 - Wrought Copper and Copper Alloy Solder Joint Pressure Fittings; The American Society of Mechanical Engineers.

G. ASME B16.23 - Cast Copper Alloy Solder Joint Drainage Fittings - DWV; The American Society of Mechanical Engineers.

H. ASME B16.26 - Cast Copper Alloy Fittings for Flared Copper Tubes; The American Society of Mechanical Engineers.

I. ASME B16.29 - Wrought Copper and Wrought Copper Alloy Solder Joint Drainage Fittings - DWV; The American Society of Mechanical Engineers.

J. ASME B31.1 - Power Piping; The American Society of Mechanical Engineers (ANSI/ASME B31.1).

K. ASME B31.2 - Fuel Gas Piping; The American Society of Mechanical Engineers.

L. ASME B31.9 - Building Services Piping; The American Society of Mechanical Engineers (ANSI/ASME B31.9).

M. ASME (BPV IV) - Boiler and Pressure Vessel Code, Section IV - Rules for Construction of Heating Boilers; The American Society of Mechanical Engineers.

N. ASME (BPV IX) - Boiler and Pressure Vessel Code, Section IX - Welding and Brazing Qualifications; The American Society of Mechanical Engineers.

O. ASTM A47/A47M - Standard Specification for Ferritic Malleable Iron Castings.

P. ASTM A53/A53M - Standard Specification for Pipe, Steel, Black and Hot-Dipped, Zinc-Coated, Welded and Seamless.

Q. ASTM A74 - Standard Specification for Cast Iron Soil Pipe and Fittings.

R. ASTM A234/A234M - Standard Specification for Piping Fittings of Wrought Carbon Steel and Alloy Steel for Moderate and High Temperature Service.

S. ASTM B32 - Standard Specification for Solder Metal.

T. ASTM B42 - Standard Specification for Seamless Copper Pipe, Standard Sizes.

U. ASTM B43 - Standard Specification for Seamless Red Brass Pipe, Standard Sizes.

V. ASTM B68/B68M - Standard Specification for Seamless Copper Tube, Bright Annealed.

W. ASTM B68M - Standard Specification for Seamless Copper Tube, Bright Annealed (Metric).

X. ASTM B75/B75M - Standard Specification for Seamless Copper Tube.

Y. ASTM B75M - Standard Specification for Seamless Copper Tube (Metric).

Z. ASTM B88 - Standard Specification for Seamless Copper Water Tube.

AA. ASTM B88M - Standard Specification for Seamless Copper Water Tube (Metric).

AB. ASTM B280 - Standard Specification for Seamless Copper Tube for Air Conditioning and Refrigeration Field Service.

AC. ASTM B302 - Standard Specification for Threadless Copper Pipe, Standard Sizes.

AD. ASTM B306 - Standard Specification for Copper Drainage Tube (DWV).

AE. ASTM C4 - Standard Specification for Clay Drain Tile and Perforated Clay Drain Tile.

AF. ASTM C14 - Standard Specification for Nonreinforced Concrete Sewer, Storm Drain, and Culvert Pipe.

AG. ASTM C14M - Standard Specification for Nonreinforced Concrete Sewer, Storm Drain, and Culvert Pipe [Metric].

AH. ASTM C76 - Standard Specification for Reinforced Concrete Culvert, Storm Drain, and Sewer Pipe.

AI. ASTM C76M - Standard Specification for Reinforced Concrete Culvert, Storm Drain, and Sewer Pipe (Metric).

AJ. ASTM C425 - Standard Specification for Compression Joints for Vitrified Clay Pipe and Fittings.

AK. ASTM C443 - Standard Specification for Joints for Concrete Pipe and Manholes, Using Rubber Gaskets.

AL. ASTM C443M - Standard Specification for Joints for Concrete Pipe and Manholes, Using Rubber Gaskets (Metric).

AM. ASTM C564 - Standard Specification for Rubber Gaskets for Cast Iron Soil Pipe and Fittings.

AN. ASTM C700 - Standard Specification for Vitrified Clay Pipe, Extra Strength, Standard Strength, and Perforated.

AO. ASTM C1053 - Standard Specification for Borosilicate Glass Pipe and Fittings for Drain, Waste, and Vent (DWV) Applications.

AP. ASTM D1785 - Standard Specification for Poly(Vinyl Chloride) (PVC) Plastic Pipe, Schedules 40, 80, and 120.

AQ. ASTM D2235 - Standard Specification for Solvent Cement for Acrylonitrile-Butadiene-Styrene (ABS) Plastic Pipe and Fittings.

AR. ASTM D2239 - Standard Specification for Polyethylene (PE) Plastic Pipe (SIDR-PR) Based on Controlled Inside Diameter.

AS. ASTM D2241 - Standard Specification for Poly (Vinyl Chloride) (PVC) Pressure-Rated Pipe (SDR Series).

AT. ASTM D2447 - Standard Specification for Polyethylene (PE) Plastic Pipe, Schedules 40 and 80, Based on Outside Diameter.

AU. ASTM D2466 - Standard Specification for Poly(Vinyl Chloride) (PVC) Plastic Pipe Fittings, Schedule 40.

AV. ASTM D2513 - Standard Specification for Polyethylene (PE) Gas Pressure Pipe, Tubing, and Fittings.

AW. ASTM D2564 - Standard Specification for Solvent Cements for Poly(Vinyl Chloride) (PVC) Plastic Piping Systems.

AX. ASTM D2609 - Standard Specification for Plastic Insert Fittings for Polyethylene (PE) Plastic Pipe.

AY. ASTM D2661 - Standard Specification for Acrylonitrile-Butadiene-Styrene (ABS) Schedule 40 Plastic Drain, Waste, and Vent Pipe and Fittings.

AZ. ASTM D2665 - Standard Specification for Poly(Vinyl Chloride) (PVC) Plastic Drain, Waste, and Vent Pipe and Fittings.

BA. ASTM D2680 - Standard Specification for Acrylonitrile-Butadiene-Styrene (ABS) and Poly(Vinyl Chloride) (PVC) Composite Sewer Piping.

BB. ASTM D2683 - Standard Specification for Socket-Type Polyethylene Fittings for Outside Diameter-Controlled Polyethylene Pipe and Tubing.

BC. ASTM D2729 - Standard Specification for Poly(Vinyl Chloride) (PVC) Sewer Pipe and Fittings.

BD. ASTM D2751 - Standard Specification for Acrylonitrile-Butadiene-Styrene (ABS) Sewer Pipe and Fittings.

BE. ASTM D2846/D2846M - Standard Specification for Chlorinated Poly(Vinyl Chloride) (CPVC) Plastic Hot- and Cold-Water Distribution Systems.

BF. ASTM D2855 - Standard Practice for Making Solvent-Cemented Joints with Poly(Vinyl Chloride) (PVC) Pipe and Fittings.

BG. ASTM D2996 - Standard Specification for Filament-Wound "Fiberglass" (Glass-Fiber-Reinforced Thermosetting-Resin) Pipe.

BH. ASTM D2997 - Standard Specification for Centrifugally Cast "Fiberglass" (Glass-Fiber-Reinforced Thermosetting-Resin) Pipe.

BI. ASTM D3034 - Standard Specification for Type PSM Poly(Vinyl Chloride) (PVC) Sewer Pipe and Fittings.

BJ. ASTM D3262 - Standard Specification for "Fiberglass" (Glass-Fiber-Reinforced Thermosetting-Resin) Sewer Pipe.

BK. ASTM D3517 - Standard Specification for "Fiberglass" (Glass-Fiber-Reinforced Thermosetting-Resin) Pressure Pipe.

BL. ASTM D3754 - Standard Specification for "Fiberglass" (Glass-Fiber-Reinforced Thermosetting-Resin) Sewer and Industrial Pressure Pipe.

BM. ASTM D3840 - Standard Specification for "Fiberglass" (Glass-Fiber-Reinforced Thermosetting-Resin) Pipe Fittings for Nonpressure Applications.

BN. ASTM F437 - Standard Specification for Threaded Chlorinated Poly(Vinyl Chloride) (CPVC) Plastic Pipe Fittings, Schedule 80.

BO. ASTM F438 - Standard Specification for Socket-Type Chlorinated Poly(Vinyl Chloride) (CPVC) Plastic Pipe Fittings, Schedule 40.

BP. ASTM F439 - Standard Specification for Chlorinated Poly(Vinyl Chloride) (CPVC) Plastic Pipe Fittings, Schedule 80.

BQ. ASTM F441/F441M - Standard Specification for Chlorinated Poly(Vinyl Chloride) (CPVC) Plastic Pipe, Schedules 40 and 80.

BR. ASTM F442/F442M - Standard Specification for Chlorinated Poly(Vinyl Chloride) (CPVC) Plastic Pipe (SDR-PR).

BS. ASTM F477 - Standard Specification for Elastomeric Seals (Gaskets) for Joining Plastic Pipe.

BT. ASTM F493 - Standard Specification for Solvent Cements for Chlorinated Poly (Vinyl Chloride) (CPVC) Plastic Pipe and Fittings.

BU. ASTM F628 - Standard Specification for Acrylonitrile-Butadiene-Styrene (ABS) Schedule 40 Plastic Drain, Waste, and Vent Pipe with a Cellular Core.

BV. ASTM F679 - Standard Specification for Poly(Vinyl Chloride) (PVC) Large-Diameter Plastic Gravity Sewer Pipe and Fittings.

BW. ASTM F708 - Standard Practice for Design and Installation of Rigid Pipe Hangers.

BX. ASTM F1281 - Standard Specification for Crosslinked Polyethylene/Aluminum/Crosslinked Polyethylene (PEX-AL-PEX) Pressure Pipe.

BY. ASTM F1282 - Standard Specification for Polyethylene/Aluminum/Polyethylene (PE-AL-PE) Composite Pressure Pipe.

BZ. AWS A5.8/A5.8M - Specification for Filler Metals for Brazing and Braze Welding; American Welding Society.

CA. AWWA C105/A21.5 - Polyethylene Encasement for Ductile-Iron Pipe Systems; American Water Works Association (ANSI/AWWA C105/A21.5).

CB. AWWA C110/A21.10 - American National Standard for Ductile-Iron and Gray-Iron Fittings, 3 In. Through 48 In. (75 mm Through 1200 mm), for Water and Other Liquids; American Water Works Association.

CC. AWWA C111/A21.11 - Rubber-Gasket Joints for Ductile-Iron Pressure Pipe and Fittings; American Water Works Association (ANSI/AWWA C111/A21.11).

CD. AWWA C151/A21.51 - Ductile-Iron Pipe, Centrifugally Cast, for Water; American Water Works Association (ANSI/AWWA C151/A21.51).

CE. AWWA C651 - Disinfecting Water Mains; American Water Works Association (ANSI/AWWA C651).

CF. AWWA C900 - Polyvinyl Chloride (PVC) Pressure Pipe, 4 In. Through 12 In. (100 mm Through 300 mm), for Water Distribution; American Water Works Association (ANSI/AWWA C900).

CG. AWWA C901 - Polyethylene (PE) Pressure Pipe and Tubing, 1/2 In. (13 mm) Through 3 In. (76 mm), for Water Service; American Water Works Association.

CH. AWWA C950 - Fiberglass Pressure Pipe; American Water Works Association (ANSI/AWWA C950).

CI. CISPI 301 - Standard Specification for Hubless Cast Iron Soil Pipe and Fittings for Sanitary and Storm Drain, Waste and Vent Piping Applications; Cast Iron Soil Pipe Institute.

CJ. CISPI 310 - Specification for Coupling for Use in Connection with Hubless Cast Iron Soil Pipe and Fittings for Sanitary and Storm Drain, Waste, and Vent Piping Applications; Cast Iron Soil Pipe Institute.

CK. MSS SP-58 - Pipe Hangers and Supports - Materials, Design, Manufacture, Selection, Application, and Installation; Manufacturers Standardization Society of the Valve and Fittings Industry, Inc..

CL. MSS SP-67 - Butterfly Valves; Manufacturers Standardization Society of the Valve and Fittings Industry, Inc..

CM. MSS SP-69 - Pipe Hangers and Supports - Selection and Application; Manufacturers Standardization Society of the Valve and Fittings Industry, Inc..

CN. MSS SP-70 - Cast Iron Gate Valves, Flanged and Threaded Ends; Manufacturers Standardization Society of the Valve and Fittings Industry, Inc..

CO. MSS SP-71 - Cast Iron Swing Check Valves, Flanged and Threaded Ends; Manufacturers Standardization Society of the Valve and Fittings Industry, Inc..

CP. MSS SP-78 - Cast Iron Plug Valves, Flanged and Threaded Ends; Manufacturers

Standardization Society of the Valve and Fittings Industry, Inc..

CQ. MSS SP-80 - Bronze Gate, Globe, Angle and Check Valves; Manufacturers Standardization Society of the Valve and Fittings Industry, Inc..

CR. MSS SP-85 - Cast Iron Globe & Angle Valves, Flanged and Threaded Ends; Manufacturers Standardization Society of the Valve and Fittings Industry, Inc..

CS. MSS SP-89 - Pipe Hangers and Supports - Fabrication and Installation Practices; Manufacturers Standardization Society of the Valve and Fittings Industry, Inc..

CT. MSS SP-110 - Ball Valves Threaded, Socket-Welding, Solder Joint, Grooved and Flared Ends; Manufacturers Standardization Society of the Valve and Fittings Industry, Inc..

CU. NFPA 54 - National Fuel Gas Code; National Fire Protection Association.

CV. NFPA 58 - Liquefied Petroleum Gas Code; National Fire Protection Association.

1.04 SUBMITTALS

A. Product Data: Provide data on pipe materials, pipe fittings, valves, and accessories. Provide manufacturers catalog information. Indicate valve data and ratings.

B. Project Record Documents: Record actual locations of valves.

1.05 QUALITY ASSURANCE

A. Perform Work in accordance with local standards.
   1. Maintain one copy on project site.

B. Valves: Manufacturer's name and pressure rating marked on valve body.

C. Welding Materials and Procedures: Conform to ASME (BPV IX) and applicable state labor regulations.

D. Welder Qualifications: Certified in accordance with ASME (BPV IX).

E. Identify pipe with marking including size, ASTM material classification, ASTM specification, potable water certification, water pressure rating.

1.06 REGULATORY REQUIREMENTS

A. Perform Work in accordance with local plumbing code.

B. Conform to applicable code for installation of backflow prevention devices.

C. Provide certificate of compliance from authority having jurisdiction indicating approval of installation of backflow prevention devices.

1.07 DELIVERY, STORAGE, AND HANDLING

A. Accept valves on site in shipping containers with labeling in place. Inspect for damage.

B. Provide temporary protective coating on cast iron and steel valves.

C. Provide temporary end caps and closures on piping and fittings. Maintain in place until installation.

D. Protect piping systems from entry of foreign materials by temporary covers, completing sections of the work, and isolating parts of completed system.

1.08 FIELD CONDITIONS

A. Do not install underground piping when bedding is wet or frozen.

1.09 EXTRA MATERIALS

A. Provide two repacking kits for each size valve.

PART 2 PRODUCTS

2.01 SANITARY SEWER PIPING, BURIED BEYOND 5 FEET OF BUILDING

A. Cast Iron Pipe: ASTM A74 service weight.
   1. Fittings: Cast iron.
   2. Joint Seals: ASTM C564 neoprene gaskets, or lead and oakum.

B. PVC Pipe: ASTM D 3034 SDR 35. As permitted by code.
   1. Fittings: PVC.
   2. Joints: Push-on, using ASTM F477 elastomeric gaskets.

C. PVC Pipe: ASTM D 2665 or ASTM D 3034. As permitted by code.
   1. Fittings: PVC.
   2. Joints: Solvent welded, with ASTM D2564 solvent cement.

2.02 SANITARY SEWER PIPING, BURIED WITHIN 5 FEET OF BUILDING

A. Cast Iron Pipe: ASTM A74 service weight.
   1. Fittings: Cast iron.
   2. Joints: Hub-and-spigot, CISPI HSN compression type with ASTM C564 neoprene gaskets or lead and oakum.

B. Cast Iron Pipe: CISPI 301, hubless.
   1. Fittings: Cast iron.
   2. Joints: CISPI 310, neoprene gasket and stainless steel clamp and shield assemblies.

2.03 SANITARY SEWER PIPING, ABOVE GRADE

A. Cast Iron Pipe: ASTM A74, service weight.
   1. Fittings: Cast iron.
   2. Joint Seals: ASTM C564 neoprene gaskets, or lead and oakum.

B. Cast Iron Pipe: CISPI 301, hubless, service weight.
   1. Fittings: Cast iron.
   2. Joints: CISPI 310, neoprene gaskets and stainless steel clamp-and-shield assemblies.

C. PVC Pipe: ASTM D1785 Schedule 40, or ASTM D2241 SDR 26 for not less than 150 psi pressure rating.
   1. Fittings: ASTM D2466, PVC.
   2. Joints: Solvent welded, with ASTM D2564 Solvent cement.

2.04 CHEMICAL RESISTANT SEWER PIPING

A. PPFR Pipe: Polypropylene, flame retardant. By Orion/Watts MFG or approved equal.
   1. Fittings: Polypropylene, PVDF
   2. Joints: Electrical resistance fusion or no-hub coupling

2.05 WATER PIPING, BURIED BEYOND 5 FEET OF BUILDING

A. Ductile Iron Pipe: AWWA C151/A21.51.
   1. Fittings: AWWA C110, ductile or gray iron, standard thickness.
   2. Joints: AWWA C111/A21.11, rubber gasket with 3/4 inch diameter rods.

B. Copper Pipe: ASTM B42, hard drawn.

1. Fittings: ASME B16.18, cast copper alloy or ASME B16.22 wrought copper and bronze.
2. Joints: ASTM B 32, alloy Sn95 solder.

C. Copper Pipe: ASTM B42, annealed.
1. Fittings: ASME B16.26, cast bronze.
2. Joints: Flared.

2.06 WATER PIPING, BURIED WITHIN 5 FEET OF BUILDING

A. Copper Pipe: ASTM B42, hard drawn.
1. Fittings: ASME B16.18, cast copper alloy or ASME B16.22 wrought copper and bronze.
2. Joints: ASTM B 32, alloy Sn95 solder.

B. Copper Pipe: ASTM B42, annealed.
1. Fittings: ASME B16.26, cast bronze.
2. Joints: Flared.

2.07 WATER PIPING, ABOVE GRADE

A. Copper Tube: ASTM B88 (ASTM B88M), Type L (B), Drawn (H).
1. Fittings: ASME B16.18, cast copper alloy or ASME B16.22, wrought copper and bronze.
2. Joints: ASTM B32, alloy Sn95 solder.

2.08 STORM WATER PIPING, BURIED BEYOND 5 FEET OF BUILDING

A. Cast Iron Pipe: ASTM A74 service weight.
1. Fittings: Cast iron.
2. Joint Seals: ASTM C564 neoprene gaskets, or lead and oakum.

B. Concrete Pipe: Nonreinforced, ASTM C14 (ASTM C14M) Class 1.
1. Fittings: Concrete, as specified for pipe.
2. Joints: Elastomeric gaskets; ASTM C443 (ASTM C443M).

C. PVC Pipe: ASTM D2665 or ASTM D3034.
1. Fittings: PVC.
2. Joints: Solvent welded, with ASTM D2564 solvent cement.

2.09 STORM WATER PIPING, BURIED WITHIN 5 FEET OF BUILDING

A. Cast Iron Pipe: ASTM A74 service weight.
1. Fittings: Cast iron.
2. Joint Seals: ASTM C564 neoprene gaskets, or lead and oakum.

B. Cast Iron Pipe: CISPI 301, hubless, service weight.
1. Fittings: Cast iron.
2. Joints: Neoprene gaskets and stainless steel clamp-and-shield assemblies.

C. PVC Pipe: ASTM D2665 or ASTM D3034.
1. Fittings: PVC.
2. Joints: Solvent welded, with ASTM D2564 solvent cement.

2.10 STORM WATER PIPING, ABOVE GRADE

A. Cast Iron Pipe: ASTM A74 service weight.
1. Fittings: Cast iron.
2. Joint Seals: ASTM C564 neoprene gaskets, or lead and oakum.

B. Cast Iron Pipe: CISPI 301, hubless, service weight.
1. Fittings: Cast iron.

2. Joints: Neoprene gaskets and stainless steel clamp-and-shield assemblies.

C. PVC Pipe: ASTM D2665 or ASTM D3034.
1. Fittings: PVC.
2. Joints: Solvent welded, with ASTM D2564 solvent cement.

2.11 NATURAL GAS PIPING, BURIED BEYOND 5 FEET OF BUILDING

A. Steel Pipe: ASTM A53/A53M Schedule 40 black.
1. Fittings: ASTM A234/A234M, wrought steel welding type, with AWWA C105/A21.5 polyethylene jacket or double layer, half-lapped 10 mil polyethylene tape.
2. Joints: ASME B31.1, welded.

2.12 NATURAL GAS PIPING, BURIED WITHIN 5 FEET OF BUILDING

A. Steel Pipe: ASTM A53/A53M Schedule 40 black.
1. Fittings: ASTM A234/A234M, wrought steel welding type.
2. Joints: ASME B31.1 or ASME B31.9, welded.
3. Jacket: AWWA C105/A21.5 polyethylene jacket or double layer, half-lapped 10 mil polyethylene tape.

2.13 NATURAL GAS PIPING, ABOVE GRADE

A. Steel Pipe: ASTM A53/A53M Schedule 40 black.
1. Fittings: ASME B16.3, malleable iron, or ASTM A234/A234M, wrought steel welding type.
2. Joints: NFPA 54, threaded or welded to ASME B31.1 or ASME B31.9.

2.14 FLANGES, UNIONS, AND COUPLINGS

A. Unions for Pipe Sizes 3 Inches and Under:
1. Ferrous pipe: Class 150 malleable iron threaded unions.
2. Copper tube and pipe: Class 150 bronze unions with soldered joints.

B. Flanges for Pipe Size Over 1 Inch:
1. Ferrous pipe: Class 150 malleable iron threaded or forged steel slip-on flanges; preformed neoprene gaskets.
2. Copper tube and pipe: Class 150 slip-on bronze flanges; preformed neoprene gaskets.

C. Grooved and Shouldered Pipe End Couplings:
1. Housing: Malleable iron clamps to engage and lock, designed to permit some angular deflection, contraction, and expansion; steel bolts, nuts, and washers; galvanized for galvanized pipe.
2. Sealing gasket: "C" shape composition sealing gasket.

D. Dielectric Connections: Union with galvanized or plated steel threaded end, copper solder end, water impervious isolation barrier.

2.15 PIPE HANGERS AND SUPPORTS

A. Provide hangers and supports that comply with MSS SP-58.
1. If type of hanger or support for a particular situation is not indicated, select appropriate type using MSS SP-58 recommendations.
2. Overhead Supports: Individual steel rod hangers attached to structure or to trapeze hangers.
3. Trapeze Hangers: Welded steel channel frames attached to structure.
4. Vertical Pipe Support: Steel riser clamp.

B. Plumbing Piping - Drain, Waste, and Vent:
   1. Conform to ASME B31.9.
   2. Hangers for Pipe Sizes 1/2 Inch to 1-1/2 Inches: Malleable iron, adjustable swivel, split ring.
   3. Hangers for Pipe Sizes 2 Inches and Over: Carbon steel, adjustable, clevis.
   4. Multiple or Trapeze Hangers: Steel channels with welded spacers and hanger rods.
   5. Wall Support for Pipe Sizes to 3 Inches: Cast iron hook.
   6. Wall Support for Pipe Sizes 4 Inches and Over: Welded steel bracket and wrought steel clamp.
   7. Vertical Support: Steel riser clamp.
   8. Floor Support: Cast iron adjustable pipe saddle, lock nut, nipple, floor flange, and concrete pier or steel support.
   9. Copper Pipe Support: Carbon steel ring, adjustable, copper plated.

C. Plumbing Piping - Water:
   1. Conform to ASME B31.9.
   2. Hangers for Pipe Sizes 1/2 Inch to 1-1/2 Inches: Malleable iron, adjustable swivel, split ring.
   3. Hangers for Cold Pipe Sizes 2 Inches and Over: Carbon steel, adjustable, clevis.
   4. Hangers for Hot Pipe Sizes 2 Inches to 4 Inches: Carbon steel, adjustable, clevis.
   5. Hangers for Hot Pipe Sizes 6 Inches and Over: Adjustable steel yoke, cast iron pipe roll, double hanger.
   6. Multiple or Trapeze Hangers: Steel channels with welded supports or spacers and hanger rods.
   7. Multiple or Trapeze Hangers for Hot Pipe Sizes 6 Inches and Over: Steel channels with welded supports or spacers and hanger rods, cast iron roll.
   8. Wall Support for Pipe Sizes to 3 Inches: Cast iron hook.
   9. Wall Support for Pipe Sizes 4 Inches and Over: Welded steel bracket and wrought steel clamp.
   10. Wall Support for Hot Pipe Sizes 6 Inches and Over: Welded steel bracket and wrought steel clamp with adjustable steel yoke and cast iron pipe roll.
   11. Vertical Support: Steel riser clamp.
   12. Floor Support for Cold Pipe: Cast iron adjustable pipe saddle, lock nut, nipple, floor flange, and concrete pier or steel support.
   13. Floor Support for Hot Pipe Sizes to 4 Inches: Cast iron adjustable pipe saddle, locknut, nipple, floor flange, and concrete pier or steel support.
   14. Floor Support for Hot Pipe Sizes 6 Inches and Over: Adjustable cast iron pipe roll and stand, steel screws, and concrete pier or steel support.
   15. Copper Pipe Support: Carbon steel ring, adjustable, copper plated.

2.16 GATE VALVES

A. Manufacturers:
   1. Conbraco Industries: www.conbraco.com.
   2. Nibco, Inc: www.nibco.com.
   3. Milwaukee Valve Company: www.milwaukeevalve.com.

B. Up To and Including 3 Inches:
   1. MSS SP-80, Class 125, bronze body, bronze trim, rising stem, handwheel, inside screw, solid wedge disc, solder ends.

C. 2 Inches and Larger:
   1. MSS SP-70, Class 125, iron body, bronze trim, outside screw and yoke, handwheel, solid wedge disc, flanged ends. Provide chain-wheel operators for valves 6 inches and larger mounted over 8 feet above floor.

2.17 GLOBE VALVES

A. Manufacturers:
   1. Conbraco Industries: www.conbraco.com.
   2. Nibco, Inc: www.nibco.com.
   3. Milwaukee Valve Company: www.milwaukeevalve.com.

B. Up To and Including 3 Inches:
   1. MSS SP-80, Class 125, bronze body, bronze trim, handwheel, bronze disc, solder ends.

C. 2 Inches and Larger:
   1. MSS SP-85, Class 125, iron body, bronze trim, handwheel, outside screw and yoke, renewable bronze plug-type disc, renewable seat, flanged ends. Provide chain-wheel operators for valves 6 inches and larger mounted over 8 feet above floor.

2.18 BALL VALVES

A. Manufacturers:
   1. Conbraco Industries: www.conbraco.com.
   2. Nibco, Inc: www.nibco.com.
   3. Milwaukee Valve Company: www.milwaukeevalve.com.

B. Construction, 4 Inches and Smaller: MSS SP-110, Class 150, 400 psi CWP, bronze, two piece body, chrome plated brass ball, regular port, teflon seats and stuffing box ring, blow-out proof stem, lever handle with balancing stops, solder ends with union.

2.19 PLUG VALVES

A. Manufacturers:
   1. Conbraco Industries: www.conbraco.com.
   2. Nibco, Inc: www.nibco.com.
   3. Milwaukee Valve Company: www.milwaukeevalve.com.

B. Construction 2-1/2 Inches and Larger: MSS SP-78, 175 psi CWP, cast iron body and plug, pressure lubricated, teflon or Buna N packing, flanged or grooved ends. Provide lever operator with set screw.

2.20 BUTTERFLY VALVES

A. Manufacturers:
   1. Hammond Valve: www.hammondvalve.com.
   2. Crane Co.: www.cranevalve.com.
   3. Milwaukee Valve Company: www.milwaukeevalve.com.

B. Construction 1-1/2 Inches and Larger: MSS SP-67, 200 psi CWP, cast or ductile iron body, nickel-plated ductile iron disc, resilient replaceable EPDM, Buna N, or EPT seat, wafer, lug, or grooved ends, extended neck, 10 position lever handle.

C. Provide gear operators for valves 8 inches and larger, and chain-wheel operators for valves mounted over 8 feet above floor.

2.21 FLOW CONTROLS

A. Manufacturers:
   1. ITT Bell & Gossett: www.bellgossett.com.
   2. Griswold Controls: www.griswoldcontrols.com.
   3. Taco, Inc: www.taco-hvac.com.

B. Construction: Class 125, Brass or bronze body with union on inlet and outlet, temperature and pressure test plug on inlet and outlet, blowdown/backflush drain.

C. Calibration: Control flow within 5 percent of selected rating, over operating pressure range of 10 times minimum pressure required for control, maximum minimum pressure 3.5 psi psi.

2.22 SWING CHECK VALVES

A. Manufacturers:
   1. Hammond Valve: www.hammondvalve.com.
   2. Nibco, Inc: www.nibco.com.
   3. Milwaukee Valve Company: www.milwaukeevalve.com.

B. Up to 3 Inches:
   1. MSS SP-80, Class 125, bronze body and cap, bronze swing disc with rubber seat, solder ends.

C. Over 3 Inches:
   1. MSS SP-71, Class 125, iron body, bronze swing disc, renewable disc seal and seat, flanged or grooved ends.

2.23 SPRING LOADED CHECK VALVES

A. Manufacturers:
   1. Hammond Valve: www.hammondvalve.com.
   2. Crane Co.: www.cranevalve.com.
   3. Milwaukee Valve Company: www.milwaukeevalve.com.

B. Class 125, iron body, bronze trim, stainless steel springs, bronze disc, Buna N seals, wafer style ends.

2.24 WATER PRESSURE REDUCING VALVES

A. Manufacturers:
   1. Amtrol Inc: www.amtrol.com.
   2. Cla-Val Co: www.cla-val.com.
   3. Watts Regulator Company: www.wattsregulator.com.

B. Up to 2 Inches:
   1. MSS SP-80, bronze body, stainless steel and thermoplastic internal parts, fabric reinforced diaphragm, strainer, threaded single or double union ends.

C. Over 2 Inches:
   1. MSS SP-85, cast iron body, bronze fitted, elastomeric diaphragm and seat disc, flanged.

2.25 RELIEF VALVES

A. Pressure Relief:
   1. Manufacturers:
      a. Cla-Val Co: www.cla-val.com.
      b. Henry Technologies: www.henrytech.com.
      c. Watts Regulator Company: www.wattsregulator.com.
   2. AGA Z21.22 certified, bronze body, teflon seat, steel stem and springs, automatic, direct pressure actuated.

B. Temperature and Pressure Relief:
   1. Manufacturers:
      a. Cla-Val Co: www.cla-val.com.

b. Henry Technologies: www.henrytech.com.
c. Watts Regulator Company: www.wattsregulator.com.

2. AGA Z21.22 certified, bronze body, teflon seat, stainless steel stem and springs, automatic, direct pressure actuated, temperature relief maximum 210 degrees F, capacity ASME (BPV IV) certified and labelled.

2.26 STRAINERS

A. Manufacturers:
1. Armstrong International, Inc: www.armstronginternational.com.
2. Green Country Filter Manufacturing: www.greencountryfilter.com.
3. WEAMCO: www.weamco.com.

B. Size 2 inch and Under:
1. Threaded brass body for 175 psi CWP, Y pattern with 1/32 inch stainless steel perforated screen.
2. Class 150, threaded bronze body 300 psi CWP, Y pattern with 1/32 inch stainless steel perforated screen.

C. Size 1-1/2 inch to 4 inch:
1. Class 125, flanged iron body, Y pattern with 1/16 inch stainless steel perforated screen.

D. Size 5 inch and Larger:
1. Class 125, flanged iron body, basket pattern with 1/8 inch stainless steel perforated screen.

PART 3 EXECUTION

3.01 EXAMINATION

A. Verify that excavations are to required grade, dry, and not over-excavated.

3.02 PREPARATION

A. Ream pipe and tube ends. Remove burrs. Bevel plain end ferrous pipe.

B. Remove scale and dirt, on inside and outside, before assembly.

C. Prepare piping connections to equipment with flanges or unions.

3.03 INSTALLATION

A. Install in accordance with manufacturer's instructions.

B. Provide non-conducting dielectric connections wherever jointing dissimilar metals.

C. Route piping in orderly manner and maintain gradient. Route parallel and perpendicular to walls.

D. Install piping to maintain headroom, conserve space, and not interfere with use of space.

E. Group piping whenever practical at common elevations.

F. Install piping to allow for expansion and contraction without stressing pipe, joints, or connected equipment. Refer to Section 22 05 16.

G. Provide clearance in hangers and from structure and other equipment for installation of insulation and access to valves and fittings. Refer to Section 22 07 19.

H. Provide access where valves and fittings are not exposed. Coordinate size and location of access doors with Section 08 31 00.

I. Establish elevations of buried piping outside the building to ensure not less than 3 ft of cover.

J. Install vent piping penetrating roofed areas to maintain integrity of roof assembly.

K. Where pipe support members are welded to structural building framing, scrape, brush clean, and apply one coat of zinc rich primer to welding.

L. Provide support for utility meters in accordance with requirements of utility companies.

M. Prepare exposed, unfinished pipe, fittings, supports, and accessories ready for finish painting. Refer to Section 09 90 00.

N. Excavate in accordance with Section 31 23 16.

O. Backfill in accordance with Section 31 23 23.

P. Install bell and spigot pipe with bell end upstream.

Q. Install valves with stems upright or horizontal, not inverted.

R. Pipe vents from gas pressure reducing valves to outdoors and terminate in weather proof hood.

S. Install water piping to ASME B31.9.

T. Install fuel oil piping to ASME B31.9.

U. PVC Pipe: Make solvent-welded joints in accordance with ASTM D2855.

V. Sleeve pipes passing through partitions, walls and floors.

W. In all kitchen/cooking areas, any piping that is run exposed along walls shall maintain at least a 1" gap to the walls to allow for cleaning per codes.

X. Inserts:
   1. Provide inserts for placement in concrete formwork.
   2. Provide inserts for suspending hangers from reinforced concrete slabs and sides of reinforced concrete beams.
   3. Provide hooked rod to concrete reinforcement section for inserts carrying pipe over 4 inches.
   4. Where concrete slabs form finished ceiling, locate inserts flush with slab surface.
   5. Where inserts are omitted, drill through concrete slab from below and provide through-bolt with recessed square steel plate and nut flush with top of slab.

Y. Pipe Hangers and Supports:
   1. Install in accordance with ASME B31.9.
   2. Support horizontal piping as scheduled.
   3. Install hangers to provide minimum 1/2 inch space between finished covering and adjacent work.
   4. Place hangers within 12 inches of each horizontal elbow.
   5. Use hangers with 1-1/2 inch minimum vertical adjustment. Design hangers for pipe movement without disengagement of supported pipe.
   6. Support vertical piping at every floor. Support riser piping independently of connected horizontal piping.
   7. Where several pipes can be installed in parallel and at same elevation, provide multiple or trapeze hangers.
   8. Provide copper plated hangers and supports for copper piping.

9. Prime coat exposed steel hangers and supports. Refer to Section 09 90 00. Hangers and supports located in crawl spaces, pipe shafts, and suspended ceiling spaces are not considered exposed.
10. Provide hangers adjacent to motor driven equipment with vibration isolation; refer to Section 22 05 48.
11. Support cast iron drainage piping at every joint.

3.04 APPLICATION

A. Use grooved mechanical couplings and fasteners only in accessible locations.

B. Install unions downstream of valves and at equipment or apparatus connections.

C. Install brass male adapters each side of valves in copper piped system. Solder adapters to pipe.

D. Install gate or ball valves for shut-off and to isolate equipment, part of systems, or vertical risers.

E. Install globe valves for throttling, bypass, or manual flow control services.

F. Provide lug end butterfly valves adjacent to equipment when provided to isolate equipment.

G. Provide spring loaded check valves on discharge of water pumps.

H. Provide plug valves in natural gas systems for shut-off service.

I. Provide flow controls in water recirculating systems where indicated.

3.05 TOLERANCES

A. Drainage Piping: Establish invert elevations within 1/2 inch vertically of location indicated and slope to drain at minimum of 1/4 inch per foot slope.

B. Water Piping: Slope at minimum of 1/32 inch per foot and arrange to drain at low points.

3.06 DISINFECTION OF DOMESTIC WATER PIPING SYSTEM

A. Disinfect water distribution system in accordance with Section 33 13 00.

B. Prior to starting work, verify system is complete, flushed and clean.

C. Ensure Ph of water to be treated is between 7.4 and 7.6 by adding alkali (caustic soda or soda ash) or acid (hydrochloric).

D. Inject disinfectant, free chlorine in liquid, powder, tablet or gas form, throughout system to obtain 50 to 80 mg/L residual.

E. Bleed water from outlets to ensure distribution and test for disinfectant residual at minimum 15 percent of outlets.

F. Maintain disinfectant in system for 24 hours.

G. If final disinfectant residual tests less than 25 mg/L, repeat treatment.

H. Flush disinfectant from system until residual equal to that of incoming water or 1.0 mg/L.

I. Take samples no sooner than 24 hours after flushing, from 10 percent of outlets and from water entry, and analyze in accordance with AWWA C651.

3.07 SERVICE CONNECTIONS

A. Provide new sanitary and storm sewer services. Before commencing work check invert elevations required for sewer connections, confirm inverts and ensure that these can be properly connected with slope for drainage and cover to avoid freezing.

B. Provide new water service complete with approved reduced pressure backflow preventer and water meter with by-pass valves, pressure reducing valve.
   1. Provide sleeve in wall for service main and support at wall with reinforced concrete bridge. Calk enlarged sleeve and make watertight with pliable material. Anchor service main inside to concrete wall.
   2. Provide 18 gage galvanized sheet metal sleeve around service main to 6 inch above floor and 6 feet minimum below grade. Size for minimum of 2 inches of loose batt insulation stuffing.

C. Provide new gas service complete with gas meter and regulators. Gas service distribution piping to have initial minimum pressure of 7 inch wg. Provide regulators on each line serving gravity type appliances, sized in accordance with equipment.

3.08 SCHEDULES

A. Pipe Hanger Spacing:
   1. Metal Piping:
      a. Pipe size: 1/2 inches to 1-1/4 inches:
         1) Maximum hanger spacing: 6.5 ft.
         2) Hanger rod diameter: 3/8 inches.
      b. Pipe size: 1-1/2 inches to 2 inches:
         1) Maximum hanger spacing: 10 ft.
         2) Hanger rod diameter: 3/8 inch.
      c. Pipe size: 2-1/2 inches to 3 inches:
         1) Maximum hanger spacing: 10 ft.
         2) Hanger rod diameter: 1/2 inch.
      d. Pipe size: 4 inches to 6 inches:
         1) Maximum hanger spacing: 10 ft.
         2) Hanger rod diameter: 5/8 inch.
      e. Pipe size: 8 inches to 12 inches:
         1) Maximum hanger spacing: 14 ft.
         2) Hanger rod diameter: 7/8 inch.
      f. Pipe size: 14 inches and Over:
         1) Maximum hanger spacing: 20 ft.
         2) Hanger rod diameter: 1 inch.
   2. Plastic Piping:
      a. Pipe Size 1" to 6":
         1) Maximum hanger spacing: 6 ft.
         2) Hanger rod diameter: 3/8 inch.
      b. Pipe Size 8" and Over:
         1) Maximum hanger spacing: 6 ft.
         2) Hanger rod diameter: 7/8 inch.

END OF SECTION

SECTION 22 10 06

PLUMBING PIPING SPECIALTIES

PART 1 GENERAL

1.01 SECTION INCLUDES

A. Roof and floor drains.

B. Cleanouts.

C. Hydrants.

D. Backflow preventers.

E. Water hammer arrestors.

F. Interceptors.

G. Thermostatic mixing valves.

H. Catch basins and manholes.

1.02 RELATED REQUIREMENTS

A. Section 33 05 13 - Manholes and Structures.

B. Section 03 30 00 - Cast-in-Place Concrete: Manhole bottoms.

C. Section 22 10 05 - Plumbing Piping.

D. Section 22 40 00 - Plumbing Fixtures.

E. Section 22 30 00 - Plumbing Equipment.

F. Section 26 27 17 - Equipment Wiring: Electrical characteristics and wiring connections.

1.03 REFERENCE STANDARDS

A. ASME A112.6.3 - Floor and Trench Drains; The American Society of Mechanical Engineers.

B. ASME A112.6.4 - Roof, Deck, and Balcony Drains; The American Society of Mechanical Engineers.

C. ASSE 1011 - Hose Connection Vacuum Breakers; American Society of Sanitary Engineering (ANSI/ASSE 1011).

D. ASSE 1012 - Backflow Preventer with Intermediate Atmospheric Vent; American Society of Sanitary Engineering (ANSI/ASSE 1012).

E. ASSE 1013 - Reduced Pressure Principle Backflow Preventers and Reduced Pressure Fire Protection Principle Backflow Preventers; American Society of Sanitary Engineering.

F. ASSE 1019 - Vacuum Breaker Wall Hydrants, Freeze Resistant Automatic Draining Type; American Society of Sanitary Engineering (ANSI/ASSE 1019).

G. ASTM C478 - Standard Specification for Precast Reinforced Concrete Manhole Sections.

H. ASTM C478M - Standard Specification for Precast Reinforced Concrete Manhole Sections [Metric].

I. PDI-WH 201 - Water Hammer Arresters; Plumbing and Drainage Institute.

1.04 SUBMITTALS

A. Product Data: Provide component sizes, rough-in requirements, service sizes, and finishes.

B. Shop Drawings: Indicate dimensions, weights, and placement of openings and holes.

C. Certificates: Certify that grease or oil interceptors meet or exceed specified requirements.

D. Manufacturer's Instructions: Indicate Manufacturer's Installation Instructions: Indicate assembly and support requirements.

E. Project Record Documents: Record actual locations of equipment, cleanouts, backflow preventers, water hammer arrestors.

F. Operation Data: Indicate frequency of treatment required for interceptors.

G. Maintenance Data: Include installation instructions, spare parts lists, exploded assembly views.

1.05 QUALITY ASSURANCE

A. Manufacturer Qualifications: Company specializing in manufacturing the Products specified in this section with not less than three years documented experience.

1.06 DELIVERY, STORAGE, AND HANDLING

A. Accept specialties on site in original factory packaging. Inspect for damage.

1.07 EXTRA MATERIALS

A. Supply for Red Clay Consolidated School District's use in maintenance of project:
   1. Two loose keys for outside hose bibbs.
   2. Two hose end vacuum breakers for hose bibbs.

PART 2 PRODUCTS

2.01 DRAINS

A. Manufacturers:
   1. Josam Company: www.josam.com.
   2. Jay R. Smith Manufacturing Company: www.jayrsmith.com.
   3. Zurn Industries, Inc: www.zurn.com.
   4. Substitutions: See Section 01 60 00 - Product Requirements.

B. Roof Drains:
   1. Assembly: ASME A112.6.4.
   2. Body: Lacquered cast iron with sump.
   3. Strainer: Removable polyethylene, cast metal, cast bronze, or cast iron dome with vandal proof screws.
   4. Accessories: Coordinate with roofing type.
      a. Membrane flange and membrane clamp with integral gravel stop.
      b. Adjustable under deck clamp.
      c. Roof sump receiver.
      d. Waterproofing flange.
      e. Controlled flow weir.
      f. Leveling frame.
      g. Adjustable extension sleeve for roof insulation.
      h. Perforated or slotted ballast guard extension for inverted roof.
      i. Perforated stainless steel ballast guard extension.

C. Parapet Drains:
   1. Lacquered or Galvanized cast iron body with aluminum flashing clamp collar and epoxy coated or nickel bronze sloping grate.

D. Canopy and Cornice Drains:
   1. Lacquered or Galvanized cast iron body with aluminum flashing clamp collar and epoxy coated or nickel bronze flat strainer.

E. Roof Overflow Drains:
   1. Lacquered or Galvanized cast iron body and clamp collar and bottom clamp ring; pipe extended to above flood elevation.

F. Downspout Nozzles:
   1. Bronze round with straight bottom section.

G. Area Drains:
   1. Assembly: ASME A112.6.4.
   2. Body: Lacquered cast iron with sump.
   3. Strainer: Round nickel-bronze.
   4. Accessories: Membrane flange and membrane clamp with integral gravel stop, with adjustable under deck clamp, roof sump receiver, waterproofing flange, levelling frame, adjustable extension sleeve (for insulation), and perforated stainless steel ballast guard extension.

H. Floor Drain:
   1. Round, type 304 stainless steel adjustable floor drain with anchor flange and medium-duty vertically adjustable satin finish top.

2.02 CLEANOUTS

A. Manufacturers:
   1. Jay R. Smith Manufacturing Company: www.jayrsmith.com.
   2. Josam Company: www.josam.com.
   3. Zurn Industries, Inc: www.zurn.com.
   4. Substitutions: See Section 01 60 00 - Product Requirements.

B. Cleanouts at Exterior Surfaced Areas:
   1. Round cast nickel bronze access frame and non-skid cover.

C. Cleanouts at Exterior Unsurfaced Areas:
   1. Line type with lacquered cast iron body and round epoxy coated gasketed cover.

D. Cleanouts at Interior Finished Floor Areas:
   1. Lacquered cast iron body with anchor flange, reversible clamping collar, threaded top assembly, and round gasketed scored cover in service areas and round gasketed depressed cover to accept floor finish in finished floor areas.

E. Cleanouts at Interior Finished Wall Areas:
   1. Line type with lacquered cast iron body and round epoxy coated gasketed cover, and round stainless steel access cover secured with machine screw.

F. Cleanouts at Interior Unfinished Accessible Areas: Calked or threaded type. Provide bolted stack cleanouts on vertical rainwater leaders.

2.03 HYDRANTS

A. Manufacturers:
   1. Arrowhead Brass Company: www.arrowheadbrass.com.

2. Jay R. Smith Manufacturing Company: www.jayrsmith.com.
3. Zurn Industries, Inc: www.zurn.com.

B. Wall Hydrants: Exterior
1. ASSE 1019; tamper-proof, freeze resistant, self-draining type with chrome plated wall plate hose thread spout, handwheel, and integral vacuum breaker.

C. Roof Hydrant:
1. Freezeless, cast iron support components. Drain connection, EPDM Boot.

2.04 BACKFLOW PREVENTERS

A. Manufacturers:
1. Conbraco Industries: www.conbraco.com.
2. Watts Regulator Company: www.wattsregulator.com.
3. Zurn Industries, Inc: www.zurn.com.
4. Substitutions: See Section 01 60 00 - Product Requirements.

B. Reduced Pressure Backflow Preventers:
1. ASSE 1013; bronze body with bronze internal parts and stainless steel springs; two independently operating, spring loaded check valves; diaphragm type differential pressure relief valve located between check valves; third check valve that opens under back pressure in case of diaphragm failure; non-threaded vent outlet; assembled with two gate valves, strainer, and four test cocks.
2. Compliant with local codes for service entrances.

2.05 DOUBLE CHECK VALVE ASSEMBLIES

A. Manufacturers:
1. Conbraco Industries: www.conbraco.com.
2. Watts Regulator Company: www.wattsregulator.com.
3. Zurn Industries, Inc: www.zurn.com.
4. Substitutions: See Section 01 60 00 - Product Requirements.

B. Double Check Valve Assemblies:
1. ASSE 1012; Bronze body with corrosion resistant internal parts and stainless steel springs; two independently operating check valves with intermediate atmospheric vent.
2. Compliant with local codes for service entrances.

2.06 WATER HAMMER ARRESTORS

A. Manufacturers:
1. Jay R. Smith Manufacturing Company: www.jayrsmith.com.
2. Watts Regulator Company: www.wattsregulator.com.
3. Zurn Industries, Inc: www.zurn.com.
4. Souix Chief Company.
5. Substitutions: See Section 01 60 00 - Product Requirements.

B. Water Hammer Arrestors:
1. Stainless steel construction, bellows or piston type sized in accordance with PDI-WH 201, precharged suitable for operation in temperature range -100 to 300 degrees F and maximum 250 psi working pressure.

2.07 MIXING VALVES

A. Thermostatic Mixing Valves:
1. Manufacturers:
a. ESBE: www.esbe.se/en.

b. Leonard Valve Company: www.leonardvalve.com.
c. Honeywell Water Controls: http://yourhome.honeywell.com.
d. Substitutions: See Section 01 60 00 - Product Requirements.

2. Valve: Chrome plated cast brass body, stainless steel or copper alloy bellows, integral temperature adjustment.
3. Accessories:
   a. Check valve on inlets.
   b. Volume control shut-off valve on outlet.
   c. Stem thermometer on outlet.
   d. Strainer stop checks on inlets.
4. Cabinet: 16 gage prime coated steel, for recessed mounting with keyed lock.

PART 3 EXECUTION

3.01 INSTALLATION

A. Install in accordance with manufacturer's instructions.

B. Extend cleanouts to finished floor or wall surface. Lubricate threaded cleanout plugs with mixture of graphite and linseed oil. Ensure clearance at cleanout for rodding of drainage system.

C. Encase exterior cleanouts in concrete flush with grade.

D. Install floor cleanouts at elevation to accommodate finished floor.

E. Install approved portable water protection devices on plumbing lines where contamination of domestic water may occur; on boiler feed water lines, janitor rooms, fire sprinkler systems, premise isolation, irrigation systems, flush valves, interior and exterior hose bibbs.

F. Pipe relief from backflow preventer to nearest drain.

G. Install water hammer arrestors complete with accessible isolation valve on hot and cold water supply piping to lavatories, sinks, washing machines, toilets, urinal and any other quick closing valves.

END OF SECTION

SECTION 221113 - FACILITY WATER DISTRIBUTION PIPING

PART 1 - GENERAL

1.1 RELATED DOCUMENTS

A. Drawings and general provisions of the Contract, including General and Supplementary Conditions and Division 01 Specification Sections, apply to this Section.

1.2 SUMMARY

A. This Section includes water-distribution piping and related components outside the building for water service and fire-service mains.

B. Contractor shall furnish and install all mains, hydrants, valves and fittings as specified and indicated on the drawings.

1.3 SYSTEM PERFORMANCE REQUIREMENTS

A. Minimum Working Pressure Ratings: Except where otherwise indicated, the following are minimum pressure requirements for water system piping.

1. Underground Piping: 150 psi (1035 kPa).1
2. Underground Piping, Fire Suppression System: 200 psig (1380 kPa).

B. Protection of Potable Water Supply:

1. A minimum of 10 feet horizontal separation shall be provided between proposed water mains and proposed sewers.
2. Clearances: Where specified crossing clearance cannot be obtained, sewer shall be encased in concrete for 10 feet each side of water main. For crossings of other utilities, sewer shall be encased with limits of the utility trench.

   a. Sewer crossing water mains shall have a clearance of 18 inches below water main or shall be encased.
   b. Sewers shall have a minimum of 6 inches clearance when crossing other utilities.

1.4 SUBMITTALS

A. Product Data: For each type of product indicated.

B. Shop Drawings: none

C. Coordination Drawings: For piping and specialties including relation to other services in same area, drawn to scale. Show piping and specialty sizes and valves, meter and specialty locations, and elevations.

D. Field quality-control test reports.

E. Record drawings at Project closeout of installed water system piping and products according to Division 1 Section "Project Closeout."

1.5 QUALITY ASSURANCE

A. Regulatory Requirements:

1. Comply with standards of authorities having jurisdiction for potable-water-service piping, including materials, installation, testing, and disinfection.
2. Comply with standards of authorities having jurisdiction for fire-suppression water-service piping, including materials, hose threads, installation, and testing.

B. Piping materials shall bear label, stamp, or other markings of specified testing agency.

C. Comply with ASTM F 645 for selection, design, and installation of thermoplastic water piping.

D. Comply with FMG's "Approval Guide" or UL's "Fire Protection Equipment Directory" for fire-service-main products.

E. NFPA Compliance: Comply with NFPA 24 for materials, installations, tests, flushing, and valve and hydrant supervision for fire-service-main piping for fire suppression.

F. NSF Compliance:

1. Comply with NSF 14 for plastic potable-water-service piping.
2. Comply with NSF 61 for materials for water-service piping and specialties for domestic water.

G. Provide listing/approval stamp, label, or other marking on equipment made to specified standards

1.6 DELIVERY, STORAGE, AND HANDLING

A. Preparation for Transport: Prepare valves, including fire hydrants, according to the following:

1. Ensure that valves are dry and internally protected against rust and corrosion.
2. Protect valves against damage to threaded ends and flange faces.
3. Set valves in best position for handling. Set valves closed to prevent rattling.

B. During Storage: Use precautions for valves, including fire hydrants, according to the following:

1. Do not remove end protectors unless necessary for inspection; then reinstall for storage.
2. Protect from weather. Store indoors and maintain temperature higher than ambient dew-point temperature. Support off the ground or pavement in watertight enclosures when outdoor storage is necessary.

C. Handling: Use sling to handle valves and fire hydrants if size requires handling by crane or lift. Rig valves to avoid damage to exposed parts. Do not use handwheels or stems as lifting or rigging points.

D. Deliver piping with factory-applied end caps. Maintain end caps through shipping, storage, and handling to prevent pipe-end damage and to prevent entrance of dirt, debris, and moisture.

E. Protect stored piping from moisture and dirt. Elevate above grade. Do not exceed structural capacity of floor when storing inside.

F. Protect flanges, fittings, and specialties from moisture and dirt.

G. Store plastic piping protected from direct sunlight. Support to prevent sagging and bending.

1.7 PROJECT CONDITIONS

A. Interruption of Existing Water-Distribution Service: Do not interrupt service to facilities occupied by Owner or others unless permitted under the following conditions and then only after arranging to provide temporary water-distribution service according to requirements indicated:

1. Notify Construction Manager & Owner no fewer than five days in advance of proposed interruption of service.
2. Do not proceed with interruption of water-distribution service without Construction Manager's & Owner’s written permission.

B. Verify that water system piping may be installed in compliance with original design and referenced standards.

C. Site Information: Reports on subsurface condition investigations made during the design of the Project are available for informational purposes only; data in reports are not intended as representations or warranties of accuracy or continuity of conditions (between soil borings). Owner and Architect assumes no responsibility for interpretations or conclusions drawn from this information

1.8 COORDINATION

A. Coordinate connection to Building Plumbing and other Division 22 work.

B. Coordinate with other utility work including but not limited to fire protection systems piping.

C. Coordinate electrical requirements of actual equipment furnished with requirements specified in Division 26.

PART 2 - PRODUCTS

2.1 DUCTILE-IRON PIPE AND FITTINGS

A. Mechanical-Joint, Ductile-Iron Pipe: AWWA C151, with mechanical-joint bell and plain spigot end unless grooved or flanged ends are indicated.

1. Mechanical-Joint, Ductile-Iron Fittings: AWWA C110, ductile- or gray-iron standard pattern or AWWA C153, ductile-iron compact pattern.
2. Glands, Gaskets, and Bolts: AWWA C111, ductile- or gray-iron glands, rubber gaskets, and steel bolts.

B. Push-on-Joint, Ductile-Iron Pipe: AWWA C151, with push-on-joint bell and plain spigot end unless grooved or flanged ends are indicated.

1. Push-on-Joint, Ductile-Iron Fittings: AWWA C110, ductile- or gray-iron standard pattern or AWWA C153, ductile-iron compact pattern.
2. Gaskets: AWWA C111, rubber.

C. Flanges: ASME 16.1, Class 125, cast iron.

D. Comply with NFPA 24 and local/state regulations for fire-service mains.

2.2 PVC PIPE AND FITTINGS

A. PVC, AWWA Pipe: AWWA C900, Class 150 and Class 200, with bell end with gasket, and with spigot end.

B. Push-on-Joint, Ductile-Iron Fittings: AWWA C110, ductile- or gray-iron standard pattern or AWWA C153, ductile-iron compact pattern.

1. Gaskets: AWWA C111, rubber.

C. Mechanical-Joint, Ductile-Iron Fittings: AWWA C110, ductile- or gray-iron standard pattern or AWWA C153, ductile-iron compact pattern.

1. Glands, Gaskets, and Bolts: AWWA C111, ductile- or gray-iron glands, rubber gaskets, and steel bolts.

D. Mains & Services for Fire Suppression

1. Comply with UL 1285 for fire-service mains if indicated.
2. Comply with NFPA 24 and local/state regulations for fire-service mains.

2.3 PIPING SPECIALTIES

A. Transition Fittings: Manufactured fitting or coupling same size as, with pressure rating at least equal to and ends compatible with, piping to be joined.

B. Split-Sleeve Pipe Couplings:

1. Manufacturers: Subject to compliance with requirements, provide products by one of the following:

a. Victaulic Depend-O-Lok.

2. Description: Metal, bolted, split-sleeve-type, reducing or transition coupling with sealing pad and closure plates, O-ring gaskets, and bolt fasteners.

a. Standard: AWWA C219.
b. Sleeve Material: Stainless steel.
c. Sleeve Dimensions: Of thickness and width required to provide pressure rating.
d. Gasket Material: O-rings made of EPDM rubber, unless otherwise indicated.
e. Pressure Rating: 200 psig minimum.
f. Metal Component Finish: Corrosion-resistant coating or material.

2.1 WATER METERS

A. Water meters will be furnished by utility company.

2.2 CONCRETE METER VAULTS

A. Description: Precast, reinforced-concrete vault, designed for A-16 load designation according to ASTM C 857 and made according to ASTM C 858.

1. Available Manufacturers: Subject to compliance with requirements, manufacturers offering products that may be incorporated into the Work include, but are not limited to, the following:

a. A.C. Miller Precast Concrete Products

2. Ladder: ASTM A 36/A 36M, steel or polyethylene-encased steel steps.

3. Access Hatch: Heavy Duty Aluminum to meet Utility Company Requirements

2.3 GATE VALVES

A. AWWA, Cast-Iron Gate Valves:

1. Manufacturers: Subject to compliance with requirements, provide products by one of the following:

a. Provide valves by Waterous, Mueller Co. or a comparable product approved by the Engineer.

2. Nonrising-Stem, Resilient-Seated Gate Valves:

a. Description: Gray- or ductile-iron body and bonnet; with bronze or gray- or ductile-iron gate, resilient seats, bronze stem, and stem nut.

1) Standard: AWWA C509.
2) Minimum Pressure Rating: 200 psig .
3) End Connections: Mechanical joint.
4) Interior Coating: Complying with AWWA C550.

2.4 GATE VALVE ACCESSORIES AND SPECIALTIES

A. Tapping-Sleeve Assemblies:

1. Manufacturers: Provide products by one of the following:
2. Provide Mueller Co.; Water Products Div or a comparable product approved by the utility.
3. Description: Sleeve and valve compatible with drilling machine.

a. Standard: MSS SP-60.
b. Tapping Sleeve: Cast- or ductile-iron or stainless-steel, two-piece bolted sleeve with flanged outlet for new branch connection. Include sleeve matching size and type of pipe material being tapped and with recessed flange for branch valve.
c. Valve: AWWA, cast-iron, nonrising-stem, resilient-seated gate valve with one raised face flange mating tapping-sleeve flange.

B. Valve Boxes: Comply with AWWA M44 for cast-iron valve boxes. Include top section, extra deep lid with two holes, adjustable extension of length required for depth of burial of valve (valve boxes shall be adjustable between 2’-4” and 3’-4” except when deeper settings are required) , plug with lettering "WATER," and bottom section with base that fits over valve and with a barrel 5 1/4 inches in diameter.

1. Provide boxes by Mueller, or a comparable product approved by the utility.
2. Operating Wrenches: Steel, tee-handle with one pointed end, stem of length to operate deepest buried valve, and socket matching valve operating nut.
3. All boxes for 4, 6, and 8-inch valves shall be equipped with #6 round base. Valve boxes shall be adjustable between 2’-4” and 3’-4” except when deeper settings are required.

2.5 CORPORATION VALVES AND CURB VALVES

A. Manufacturers:

1. Manufacturers: Subject to compliance with requirements, provide products by one of the following:

a. Ford Meter Box Company, Inc. (The); Pipe Products Div. model number per utility company standard.

B. Service-Saddle Assemblies: Comply with AWWA C800. Include saddle and valve compatible with tapping machine.

1. Service Saddle: Copper alloy with seal and AWWA C800, threaded outlet for corporation valve.
2. Corporation Valve: Bronze body and ground-key plug, with AWWA C800, threaded inlet and outlet matching service piping material.
3. Manifold: Copper fitting with two to four inlets as required, with ends matching corporation valves and outlet matching service piping material.

C. Curb Valves: Comply with AWWA C800. Include bronze body, ground-key plug or ball, and wide tee head, with inlet and outlet matching service piping material.

D. Service Boxes for Curb Valves: Similar to AWWA M44 requirements for cast-iron valve boxes. Include cast-iron telescoping top section of length required for depth of burial of valve, plug with lettering "WATER," and bottom section with base that fits over curb valve and with a barrel approximately 4 1/4 inches in diameter.

1. Shutoff Rods: Steel, tee-handle with one pointed end, stem of length to operate deepest buried valve, and slotted end matching curb valve.

A. Single-Detector Check Valve -Assembly:

1. Available Manufacturers: Subject to compliance with requirements, manufacturers offering products that may be incorporated into the Work include, but are not limited to, the following:

a. Ames Fire & Waterworks; a division of Watts Regulator Co.
b. FEBCO; SPX Valves & Controls.
c. Watts Water Technologies, Inc.
d. Wilkins; a Zurn company.

2. Standards: ASSE 1048 and UL listed or FMG approved.
3. Size: NPS 8
4. Body: Cast iron with interior lining complying with AWWA C550 or that is FDA approved
5. End Connections: Flanged.
6. Configuration: Designed for horizontal, straight through flow.
7. Accessories:

a. Valves: UL 262, FMG-approved, OS&Y gate type with flanged ends on inlet and outlet.
b. Bypass: With displacement-type water meter, shutoff valves, and reduced-pressure backflow preventer.

2.6 FIRE HYDRANTS

A. Dry-Barrel Fire Hydrants:

1. Manufacturers: Subject to compliance with requirements, provide products by one of the following:

a. American Darling B-62-B or equivalent.
b. Substitutions shall be approved by the Architect.

2. Description:

a. Standard: AWWA C502.
b. All hydrants to be furnished with non-kinking chains on the 2 ½-inch nozzles.

3. A sworn certificate of inspection and testing shall be furnished by the manufacturer. Install hydrants with restraint system as detailed on the drawings, or with a hydrant tee.

2.7 FIRE DEPARTMENT CONNECTIONS

A. Fire Department Connections:

1. Manufacturers: Subject to compliance with requirements of the DE State Fire Marshal and local health department and match local fire department threads. Contractor responsible to confirm location with the Local Fire Chief. Coordinate with Division 21.

2.8 IDENTIFICATION

A. Metallic-Lined Plastic Underground Warning Tapes: Polyethylene plastic tape with metallic core, 6 inches (150 mm) wide by 4 mils (1 mm) thick, solid blue in color with continuously printed caption in black letters "CAUTION - WATER LINE BURIED BELOW."

PART 3 - EXECUTION

3.1 EARTHWORK

A. Refer to Division 31 Section "Earth Moving" for excavating, trenching, and backfilling.

3.2 PIPING APPLICATIONS

A. General: Use pipe, fittings, and joining methods for piping systems according to the following applications.

B. Transition couplings and special fittings with pressure ratings at least equal to piping pressure rating may be used, unless otherwise indicated.

C. Do not use flanges or unions for underground piping.

D. Flanges, unions, grooved-end-pipe couplings, and special fittings may be used, instead of joints indicated, on aboveground piping and piping in vaults.

E. Underground Water-Service and Fire-Service-service piping shall be as noted on the drawings or any of the following:

1. PVC, AWWA C900 Class 150 and 200 pipe; Ductile Iron fabricated fittings and gasketed joints.
2. Ductile-iron, push-on-joint pipe; ductile-iron, push-on-joint fittings; and gasketed joints.
3. Comply with FMG's "Approval Guide" or UL's "Fire Protection Equipment Directory" for fire-service-main products
4. Installation shall be coordinated with and overseen by the fire protection contractor.

3.3 VALVE APPLICATIONS

A. General Application: Use mechanical-joint-end valves for NPS 3 and larger underground installation. Use threaded- or flanged-end valves for installation in vaults as indicated in utility company details. Use UL/FMG, non-rising-stem gate valves for installation with indicator posts. Use corporation valves and curb valves with ends compatible with piping, for NPS 2 and smaller installation.

B. Drawings indicate valve types to be used. Where specific valve types are not indicated, the following requirements apply:

1. Underground Valves, NPS 3 and Larger: AWWA, cast-iron, nonrising-stem, resilient-seated gate valves with valve box.

   a. Gate Valves, NPS 2 and Smaller: Bronze, nonrising stem.
   b. Gate Valves, NPS 3 and Larger: AWWA, cast iron, resilient seated.
   c. Check Valves: UL/FMG, swing type, bronze.
   d. Ball Valves, NPS 2 and Smaller: Forged Brass

2. Detector Check Valves: Use for water-service piping in vaults and aboveground to detect unauthorized use of water. Detector check to be UL listed.

3.4 PIPING SYSTEMS - COMMON REQUIREMENTS

A. General Locations and Arrangements: Drawings indicate general location and arrangement of piping systems. Indicated locations and arrangements were used to size pipe and calculate friction loss, expansion, pump sizing, and other design considerations. Install piping as indicated except where deviations to layout are approved on coordination drawings.

B. Install piping at indicated slope.

C. Install restrained joints for buried piping within 5 feet (1.5m) of building. Use restrained-joint pipe and fittings, thrust blocks, anchors, tie-rods and clamps, and other supports at vertical and horizontal offsets.

D. Install piping free of sags and bends.

E. Locate groups of pipes parallel to each other, spaced to permit valve servicing.

F. Install fittings for changes in direction and branch connections.

3.5 PIPING INSTALLATION

A. Water-Main Connection: Tap water main according to requirements of water utility company and of size and in location indicated.

B. Make connections larger than NPS 2 with tapping machine according to the following:

1. Install tapping sleeve and tapping valve according to MSS SP-60.
2. Install tapping sleeve on pipe to be tapped. Position flanged outlet for gate valve.
3. Use tapping machine compatible with valve and tapping sleeve; cut hole in main. Remove tapping machine and connect water-service piping.
4. Install gate valve onto tapping sleeve. Comply with MSS SP-60. Install valve with stem pointing up and with valve box.

C. Comply with NFPA 24 for fire-service-main piping materials and installation.

1. Install PE corrosion-protection encasement according to ASTM A 674 or AWWA C105.
2. Install copper tube and fittings according to CDA's "Copper Tube Handbook."

D. Install ductile-iron, water-service piping according to AWWA C600 and AWWA M41.

1. Install PE corrosion-protection encasement according to ASTM A 674 or AWWA C105.

E. Install PVC, AWWA pipe according to ASTM F 645 and AWWA M23.

F. Bury piping with depth of cover over top at least 42 inches, with top at least 12 inches below level of maximum frost penetration.

G. Each section of pipe shall be placed on a solid foundation for its full length, with recesses excavated to accommodate the bell of the pipe. Any pipe which has its grade or joint disturbed after installation shall be removed and reinstalled. No pipe shall be installed on frozen or wet subgrade. Bedding material shall be provided, if required, by the Architect.

H. The interior of the pipe shall be thoroughly cleaned of all foreign matter before being lowered into the trench, and shall be kept clean during laying operations by means of plugs or other approved methods. Under no circumstances shall pipe be laid in water, and no pipe shall be laid when trench or weather conditions are unsuitable for such work.

I. At all times work is not in progress, all open ends of pipe and fittings shall be securely closed so that no trench water, earth or other substance will enter the pipe or fittings.

J. Any section of pipe in place and found to be defective shall be removed and replaced immediately at no cost to the Owner.

K. No section of pipe shall be installed with deflection greater than manufacturer’s recommendations either vertically or horizontally. Any deviation required to be greater than recommended shall be made with a special fitting.

L. All installation of ductile iron pipe shall be in accordance with AWWA Standard No. C600 with detector tape.

M. Extend water-service piping and connect to water-supply source and building-water-piping systems at outside face of building wall in locations and pipe sizes indicated.

1. Terminate water-service piping to within 5, of building wall until building-water-piping systems are installed. Terminate piping with caps, plugs, or flanges as required for piping material. Make connections to building-water-piping systems when those systems are installed.

N. Install underground piping with restrained joints at horizontal and vertical changes in direction. Use restrained-joint piping, thrust blocks, anchors, tie-rods and clamps, and other supports.

O. See Division 21 Section "Water-Based Fire-Suppression Systems" for fire-suppression-water piping inside the building.

P. See Division 22 Section "Domestic Water Piping" for potable-water piping inside the building.

3.6 JOINT CONSTRUCTION

A. Make pipe joints according to the following:

1. PVC Piping Gasketed Joints: Use joining materials according to AWWA C900. Construct joints with elastomeric seals and lubricant according to ASTM D 2774 or ASTM D 3139 and pipe manufacturer's written instructions.
2. Dissimilar Materials Piping Joints: Use adapters compatible with both piping materials, with OD, and with system working pressure.

3.7 ANCHORAGE INSTALLATION

A. Anchorage, General: Install water-distribution piping with restrained joints. Anchorages and restrained-joint types that may be used include the following:

1. Concrete thrust blocks.
2. Set-screw mechanical retainer glands.

B. Install anchorages for tees, plugs and caps, bends, crosses, valves, and hydrant branches. Include anchorages for the following piping systems:

1. Gasketed-Joint, PVC Water-Service Piping: According to AWWA M23.
2. Fire-Service-Main Piping: According to NFPA 24.

C. Apply full coat of asphalt or other acceptable corrosion-resistant material to surfaces of installed ferrous anchorage devices.

3.8 VALVE & VALVE BOX INSTALLATION

A. AWWA Gate Valves: Comply with AWWA C600 and AWWA M44. Install each underground valve with stem pointing up and with valve box.

B. Corporation Valves and Curb Valves: Install each underground curb valve with head pointed up and with service box.

C. Valve boxes shall be installed at each outside valve. Boxes shall be sufficient length to provide a cover of not less than two feet over the pipe. Valve boxes shall be set plumb, and placed directly over the valve. Valve boxes shall be placed on two, 4-inch solid concrete blocks. After being correctly positioned, each fill shall be carefully tamped around the valve box for a distance of four (4) feet on all sides of the box. Any box found out of plumb or settled shall be reset at no cost to the Owner.

3.9 DETECTOR-CHECK VALVE INSTALLATION

A. Install in vault.

B. Install for proper direction of flow. Install bypass with water meter, gate valves on each side of meter, and check valve downstream from meter.

C. Support detector check valves, meters, shutoff valves, and piping on brick or concrete piers.

3.10 WATER METER INSTALLATION

A. Install water meters, piping, and specialties according to utility company's written instructions.

B. Rough-in piping and specialties for water meter installation according to utility company's written instructions.

3.11 FIRE HYDRANT INSTALLATION

A. General: Install each fire hydrant as required by the manufacturers reccomendatoins. Provide with separate gate valve in supply pipe, anchor If no detail provided, use restrained joints or thrust blocks. Support hydrant in upright position.

B. AWWA Fire Hydrants: Comply with AWWA M17.

C. Hydrant leads shall be ductile iron.

3.12 FIRE DEPARTMENT CONNECTION INSTALLATION

A. Install protective pipe bollards as required by local fire marshal at each fire department connection. Pipe bollards are specified in Division 05 Section "Metal Fabrications."

3.13 FIELD QUALITY CONTROL

A. Piping Tests: The Contractor shall furnish all equipment, labor, and materials, including water, pumps, compressors, stopwatch, gauges, and meters as approved by the Project Civil Engineer for testing. The Project Civil Engineer shall determine the amount of main to be tested at anyone time and reserves the right to separate the installation into several test sections. All tests must be witnessed by the Project Civil Engineer or Owner.

B. Domestic Water Main Hydrostatic Tests: Test at not less than one-and-one-half times working pressure or 100 psi, whichever is greater, for two hours.

1. Test Pressure shall:

a. Be of at least two hour duration
b. Not vary by more than ± five psi.

2. Pressurization:

a. Each valved section of pipe shall be filled with water slowly and the specified test pressure, based on the elevation of the lowest point of the line or section under the test and corrected to the elevation of the test gauge shall be applied by means of a pump connected to the pipe in a manner satisfactory to the Owner.

3. Air Removal:

a. Before applying the specified test pressure, air shall be expelled completely from the pipe, valves and hydrants. If permanent air vents are not located at all high points, the Contractor shall install corporation cocks at such points, so that the air can be expelled as the line is filled with water. After all the air has been expelled, the corporation cocks shall be closed and the test pressure applied. At the conclusion of the pressure test, all corporation cocks shall be removed and plugged, or left in place at the discretion of the Owner.

4. Examination:

a. All exposed pipe, fittings, valves, hydrants and joints shall be examined carefully during the test. Any damage or defective pipe, fittings, valves, or hydrants that are discovered following the pressure test shall be repaired or replaced with same material and the test shall be repeated until it is satisfactory to the Owner.

C. Leakage Test: A leakage test shall be conducted concurrently with the pressure test.

a. Leakage Defined:Leakage shall be defined as the quantity of water that must be supplied into the newly laid pipe, or at any valved section thereof, to maintain pressure within five psi of the specified test pressure after the air in the pipeline has been expelled and the pipe has been filled with water.

b. Allowable Leakage: No pipe installation will be accepted if the leakage is greater than that determined by the following formula:

ND square root of P

$$L = \frac{\quad}{7400}$$

in which L is the allowable leakage, in gallons per hour, N is the number of joints in the length of pipe line tested; D is the nominal diameter of the pipe in inches; and P is the average test pressure during the leakage test in pounds per square inch gage.

Allowable leakage at various pressures is shown in Table I (appearing after this Subsection).

c. When hydrants are in the test section, the test shall be made against the closed hydrant.

d. Should the tests show the main to be defective, the Contractor shall remedy such defects and retest the main as specified above. This procedure shall be repeated until the test requirements are met.

TABLE I

Allowable Leakage per 1000 feet of Pipeline* - gph						
Avg. Test Pressure psi	Nominal Pipe Diameter - Inch					
	2	3	4	6	8	10
150	0.19	0.28	0.37	0.55	0.74	0.92
125	0.17	0.25	0.34	0.50	0.67	0.84
100	0.15	0.23	0.30	0.45	0.60	0.75

**For pipe with 18-ft nominal lengths. To obtain the recommended allowable leakage for pipe with 20-ft nominal lengths, multiply the leakage calculated from the table by 0.9. If the pipeline under test contains sections of various diameters, the allowable leakage will be the sum of the computed leakage for each size.*

D. Test fire suppression piping according to NFPA 24, as directed by the fire suppression contractor and local authorities

E. Prepare reports of testing activities.

3.14 CLEANING

A. Clean and disinfect water-distribution piping as follows:

1. Purge new water-distribution piping systems and parts of existing systems that have been altered, extended, or repaired before use.
2. Use purging and disinfecting procedure prescribed the Delaware Department of Health. Procedure shall be as described in AWWA C651.
3. If method is not prescribed by authorities having jurisdiction, use procedure described in AWWA C651 or do as follows:

a. Upon completion of water main construction, disinfect main and appurtenances. Disinfection shall be done in accordance with ANSI/AWWA C-651, latest edition. Contractor shall submit a plan of disinfection for approval by the Architect.

b. After the applicable retention period, the heavily chlorinated water shall be flushed from the main. This water shall be discharged to the sanitary sewer system. Only after water leaving the main is no higher in chlorine concentration than normal drinking water, will a discharge to storm drains be allowed. Convey flushed water to discharge point in a closed system.

c. Affidavits of compliance, certifying the water sampled from the water mains to be free of coliform bacteria, shall be submitted to the Architect. The Contractor is responsible for requesting tests from the Delaware Department of Public Health. He shall provide written documentation when a section of mains can be placed in service.

d. The Contractor shall place in each length of pipe, hydrants, hydrant branches, and other appurtenances, a sufficient amount of HTH tablets to insure adequate disinfection treatment of the main after its completion. Tablets shall be fastened to the inside top of every length of pipe as laid, using gasket cement known as “Permatex No. 2”.

e. The Contractor will be held entirely responsible for securing a minimum residual chlorine content of 5 p.p.m. at the extremities of the mains after twenty-four (24) hours or more contact with the full water pressure on the main.

f. Water for filling the mains shall be introduced at a velocity of less than one (1) foot per second in order to permit the HTH or Perchloron to completely dissolve and have a reasonable uniform distribution throughout the mains. It is the intent of this Specification to require a sufficient amount of chemical to be equivalent to a dosage of 50 p.p.m. of chlorine.

g. After the chlorine has been in contact with the mains or storage units for twenty-four (24) hours or longer, samples collected from the extremities of the mains shall indicate a residual chlorine content of 5 p.p.m. or more.

h. If less than 5 p.p.m. residual chlorine is indicated, the system shall be drained and the disinfection treatment repeated.

i. If samples collected at the extremities indicate a residual chlorine of 5 p.p.m. or more, the system shall be flushed until there is only a normal chlorine residual (1.0 p.p.m. or less) present, as determined by the DPD Method Test. Samples of water shall be collected from various points along the lines, by a lab certified in the State of Delaware for bacteriological analysis. If satisfactory bacteriological results are obtained, the lines may then be allowed to be placed in service. A copy of all test results shall be submitted to the Architect.

4. Contractor shall provide all disinfection testing within the lump sum prices bid.

B. Prepare reports of purging and disinfecting activities.

END OF SECTION 221113

SECTION 221313 - FACILITY SANITARY SEWERS

PART 1 - GENERAL

1.1 RELATED DOCUMENTS

A. Drawings and general provisions of the Contract, including General and Supplementary Conditions and Division 01 Specification Sections, apply to this Section.

1.2 SUMMARY

A. This Section includes gravity-flow, non-pressure sanitary sewerage outside the building, with the following components:

1. Pipe Line and Trench Excavation
2. Precast concrete manholes.
3. Pipe and Fittings
4. Cleanouts

B. All work performed on sanitary sewer system components shall be completed and approved by the county to the standards and specifications issued by New Castle County Department of Special Services.

C. The Contractor shall furnish all materials and shall construct the pipe lines and all required appurtenances at the locations and to the lines, slopes and elevations shown on the drawings or designated by the Engineer.

D. Manholes shall be built at such points on the pipe lines and of such form and dimensions as are shown on the drawings or as may be directed. Manholes shall be built as pipe laying progresses and the Engineer may stop work entirely on the laying pipe if manhole construction is delayed to such an extent as to be hazardous to construction or the public.

E. The Contractor shall perform all excavation, backfilling grubbing and grading required for construction and installation of pipelines, structures and appurtenances. Excavation shall include removal of pavement, concrete, rock, earth and debris, regardless of character. Trenches and excavations shall be sheeted, shored and braced by the Contractor, as necessary to allow construction and provide safe working conditions, additionally, the Contractor shall be responsible for maintaining a dry excavation by dewatering. He shall also locate, support and protect existing utilities and structures encountered in the work, provide traffic control, dispose of surplus and unsuitable excavated materials and restore backfilled areas to original condition or as required by the drawings and specifications. All backfilled and restored areas shall be maintained by the Contractor, in a proper condition, for the duration of the project.

F. The Contractor is responsible for direct or indirect damage to existing structures, pipelines, conduits, poles, wires and utilities of every description in the vicinity of his work whether above or below ground, or that may be encountered in trench or structure excavation. This responsibility shall include the cost of protection by sheeting, bracing, hand excavation, when warranted, and the expense to repair or replace any existing facility damaged directly or indirectly by construction activities under this contract, whether such facility is or is not shown on the drawings.

G. The Contractor shall verify the location, size and elevation of all existing utilities at the various points of connection and/or crossings prior to starting any work. Any discrepancies in locations or elevations shall be brought to the attention of the Engineer in order that the designs may be adjusted accordingly. Damages suffered or additional costs incurred by the Contractor as a result of his failure to conform to the requirements of this paragraph shall be the sole responsibility of the Contractor. Connections to existing utilities shall be made by the Contractor at such a time and in such a manner as the Engineer may direct, and

the cost shall be included in the price bid for pipeline and structures, unless otherwise defined in the proposal.

H. Excavation and backfill, within an area where a State agency has jurisdiction, shall be done in accordance with requirements and provisions of the permits issued by the agencies for the construction within their respective rights-of-way. Such requirements and provisions, where applicable, shall take precedence and supersede the provisions of these specifications.

1.3 SUBMITTALS

A. Product Data: For the following:

1. Special pipe fittings.

B. Shop Drawings: For the following:

1. Manholes: Include plans, elevations, sections, details, and frames and covers.

2. Pipe and fittings

3. The Contractor shall submit certifications to the Engineer that all pipe, fittings and joints are as specified herein.

C. Field quality-control test reports.

1.4 QUALITY ASSURANCE

A. Environmental Compliance: Comply with applicable portions of local environmental agency regulations pertaining to sanitary sewerage systems.

B. Utility Compliance: Comply with local Municipality/utility company regulations and standards pertaining to sanitary sewer systems.

1.5 DELIVERY, STORAGE, AND HANDLING

A. Retain first paragraph below for ABS, PVC, or fiberglass piping.

B. Do not store plastic manholes, pipe, and fittings in direct sunlight.

C. Protect pipe, pipe fittings, and seals from dirt and damage.

D. Handle manholes according to manufacturer's written rigging instructions.

1.6 PROJECT CONDITIONS

A. Existing Utilities: Locate existing underground utilities in the areas of work. Call "Miss Utility" (1-800-282-8555) and the Kent County Department of Public Works for assistance in locating existing utilities. If utilities are to remain in place, provide adequate means of protection during construction of sanitary sewer system.

B. If utilities are to remain in place, provide adequate means of protection during construction of sanitary sewer system.

C. Interruption of Existing Sanitary Sewerage Service: Do not interrupt service to facilities occupied by Owner or others unless permitted under the following conditions and then only after arranged to provide temporary service according to requirements indicated:

1. Notify, the Construction Manager, Engineer, and the Owner no fewer than 5 days in advance of proposed interruption of service.
2. Do not proceed with interruption of service without the Construction Manager's and the Owner's written permission.

D. Should uncharted or incorrectly charted piping or other utilities be encountered during work, consult Owner immediately for directions as to procedure. Repair damaged utilities that are to remain in service to satisfaction of the associated jurisdiction.

PART 2 - PRODUCTS

2.1 EXCAVATION MATERIALS

A. No classification of excavated materials will be made. Excavation and trenching work shall include the removal and subsequent handling of all materials excavated or otherwise removed in performance of the contract work, regardless of the type, character, composition, or condition thereof.

2.2 PRECAST REINFORCED CONCRETE MANHOLES

A. Precast reinforced concrete risers, eccentric cones and bases shall be in conformance with ASTM C478. Joints between riser sections shall be fitted with an "O" ring rubber gasket, meeting the requirements of ASTM C443. Installation of risers shall be in accordance with manufacturer's recommendations under the supervision of the Engineer. Minimum compressive strength of concrete shall be 4000 psi in 28 days.

B. Precast reinforced concrete base and riser sections shall be as manufactured by Atlantic Concrete Products Company, Virginia Precast Corporation, or equal.

C. Interior and exterior joint spaces of all manhole risers shall be filled prior to application of the exterior waterproofing. The interior joint shall be mortared. The exterior joint may be mortared or filled with a joint filler compound. Said compound shall be Pioneer 301 as manufactured by Daubert Chemical Co., Oakbrook, Illinois, or equal.

D. Lifting holes in the walls of precast reinforced concrete risers will be allowed but shall be plugged with rubber stoppers and grouted flush with face or manhole wall after the installation of manhole riser sections. Not more than two holes shall be cast in the walls of each riser section for the purpose of handling.

E. The exterior surface of all precast manholes shall receive a minimum two coat application of a 68 percent solids coal tar type protective coating. The total average dry film thickness shall measure 24 mils with no single measurement to be less than 20 mils. Surfaces shall be prepared in accordance with the manufacturer's instructions and coatings applied in the field in a manner acceptable to the Engineer. The coating material shall be Bitumastic Super Service Black manufactured by Koppers Co., Inc., Pittsburgh, Pennsylvania, Tar-Jet Super Black XX-32-B-22 manufactured by Pennsbury Coatings Corp., New Britain, Pennsylvania, or equal.

2.3 FLOW CHANNELS

A. All manhole flow channels and benches shall be constructed of brick or pre-cast into the manhole with care taken to secure smooth and even surfaces with full mortar joints. Channel sections shall be built up to true line and radius, and curved sections shall provide a uniform transition in the flow direction.

B. Materials and construction of flow channels shall be in accordance with appropriate sections for materials so used, as hereinafter specified.

2.4 CONCRETE

A. All concrete for manhole base and cradles, encasements, blocking, etc. shall have a minimum compressive strength of 4,000 psi at 28 days.

2.5 BRICK

A. All brick shall conform to the "Standard Specifications for Sewer Brick", ASTM C32, Grade SS except that the maximum absorption for the average of five bricks shall not exceed 10 percent; and the individual brick maximum shall not exceed 14 percent.

2.6 MORTAR

A. Cement shall be in accordance with the "Standard Specifications for Portland Cement", ASTM C150 for Type II.

B. Sand shall be composed of sharp, angular, silicious grains, coarse, or graded from fine to coarse with the coarsest grains predominating, and sensibly free from clay, loam, dirt, mica, organic matter, or other impurities. Sand containing more than 5 percent by weight of foreign material shall not be used. This limit may be changed for special classes of work if hereinafter specified. Sand exhibiting more than an acceptable amount of fine matter or impurities may be required to be washed after delivery on the work or shall be rejected altogether. Sand for mortar shall be screened to reject all particles of a greater diameter than 1/4-inch and shall not contain more than 5 percent by weight of a very fine material.

C. Unless hereinafter specified otherwise, all mortar shall be composed of cement and sand of the character above specified. The proportion of volume shall be one part of cement to two of sand. One volume of cement shall be 94 pounds net. One volume of sand shall be 0.9 cubic feet, the sand not being packed more closely than by throwing it into a box in the usual way. Mortar shall be fresh mixed in small batches for the work in hand. Tight boxes or platforms made for the purposes shall be used. The sand and cement shall be thoroughly mixed dry, in the proper proportions, until uniform color has been produced, whereupon a moderate dose of water shall be added, so as to produce a stiff paste of the proper consistency.

D. Sand obtained from the excavation shall not be used.

2.7 MANHOLE STEPS

A. Manhole steps shall be made of 3/8 inch diameter (No. 3) steel reinforcing bars, ASTM A615, Grade 60, encased in polypropylene plastic. Manhole steps shall have notched tread ridge with retainer lug on each side.

B. Manhole steps shall be cast in place during manufacture of precast reinforced concrete manholes. Embedment length shall be suitable for minimum 5 inch thick, precast reinforced concrete riser walls.

C. Manhole steps shall be OSHA approved and as manufactured by M.A. Industries, Inc., Peachtree City, Georgia, ICM, Inc., Jacksonville, Arkansas, or equal.

D. Manhole steps shall be spaced twelve (12) inches apart. The maximum spacing from top of manhole to the first step shall not exceed sixteen (16) inches.

2.8 MANHOLE FRAMES AND COVERS

A. Frames and covers for manholes shall be set by the Contractor as the work progresses. The frame shall be well bedded in mortar.

B. Material for frames and covers shall be in accordance with the standard specifications for gray iron castings ASTM A48 for Class No. 35.

C. All frames and covers shall be of the sizes and types detailed on the drawings with "NEW CASTLE COUNTY SANITARY SEWER" cast on the cover for manholes in public right of way and “SANITARY SEWER” for manholes on private property.

2.9 DUCTILE IRON PIPE AND FITTINGS

A. Ductile iron pipe for gravity sewer construction shall be Tyton Joint, Class 52 ductile iron pipe as manufactured by U.S. Pipe. All fittings shall be 250 PSI cast iron or 350 PSI ductile iron fittings per ANSI/AWWA requirements.

B. Pipe and fittings shall have a 401 internal coating and external asphaltic coating approximately 1 mil thick.

2.10 POLYVINYL CHLORIDE PIPE AND FITTINGS

A. Polyvinyl chloride (PVC) pipe, used for sewer construction, shall equal or exceed the requirements of ASTM D 3034 and shall have a minimum standard dimension (SDR) ratio of 26 and the minimum pipe stiffness, as tested in accordance with ASTM D 2412, shall be 45 when measured under 5 percent deflection at 73 degrees Fahrenheit. Pipe shall be manufactured with integral wall bell and spigot joints in standard lengths not exceeding 20.0 feet.

B. All fittings shall have a minimum SDR of 26.

C. All polyvinyl chloride (PVC) pipe and fittings shall utilize an elastomeric O-ring gasketed joint assembled in accordance with the manufacturer's recommendations.

D. Polyvinyl chloride wye branches, pipe stoppers and other fittings shall be manufactured in accordance with the same specifications and shall have the same thickness, depth of socket, and annular space as the pipe. Tee wye fittings will not be permitted for use. Wye branches shall be complete pipe sections. Saddles will not be permitted for use.

E. Polyvinyl chloride pipe shall be delivered and stockpiled in unit pallets. Stacking of pallets above 5 feet in height will not be allowed. If pipe is stockpiled for more than 30 days prior to installation in the trench, it must be suitably covered with reflective material to protect the pipe from ultra-violet rays emanating from sunlight. Do not use plastic sheets. Allow for air circulation under covering.

F. Bowed sections of pipe will be unacceptable and installation of pipe which has bowed, whether or not the bow has been corrected, will not be allowed on this project.

PART 3 - EXECUTION

3.1 PIPELINE AND MANHOLE TRENCH EXCAVATION

A. The Contractor shall excavate, maintain and backfill all excavation necessary for completing the work under the contract. Unless otherwise specified or approved, excavation shall be open cut. No extra compensation will be allowed for hand excavation and backfill necessary to complete the work or required by the Engineer.

B. Trenches shall be excavated to the necessary width and depth, as shown on the drawings and as required for the protective sheeting, pull boxes, etc. No extra compensation will be allowed for trenches wider than that detailed on the drawings.

C. The sides of the trenches shall be practically plumb and shall not be sloped unless approved in writing by the Engineer. Trench sides shall be supported or sheeted as required to protect utilities, etc., and required for safety. Safety regulations shall be as required by state safety codes and OSHA.

D. In non-paved areas strip surface vegetation and topsoil and place in stock piles which are separated from the trench excavated materials. Topsoil shall not be used for general trench refill.

E. The excavation of all trenches shall be fully completed at least twenty (20) feet in advance of pipe laying, unless otherwise authorized or directed. The Engineer may require the backfilling of open trench, over completed pipelines, or ahead of the pipe laying operation, if in his judgement such action is necessary, and the Contractor shall have no claim for extra compensation.

F. Should work be stopped for any reason and any excavation is left open for an unreasonable length of time, the Contractor shall refill the excavation at his own expense if so directed, by the Engineer or the DOH Inspector. He shall not reopen the excavation until he is ready to complete the facility. Should the Contractor refuse or fail to refill any excavation completely within forty-eight (48) hours or immediately if it poses a safety hazard after a proper notice, has been given by the Engineer or DOH Inspector the Owner shall be authorized to do the work. The resulting expenses shall be deducted from monies due the Contractor.

G. The Contractor shall complete excavation as nearly as practicable to the lines of the pipeline to be installed as detailed. All cavities in the bottom of the trench shall be filled to the required level with compacted crushed stone or gravel.

H. Excavated materials shall be graded, hauled, stored and protected as such material found suitable will be required for backfilling, repaving or other purposes. Material classified as unsuitable shall be disposed of by the Contractor at a location approved by the Engineer. Hauling of excavated materials for any purpose shall not entitle the Contractor to additional compensation. Only those excavated materials designated by the Owner shall become property of the Contractor.

I. All stockpiled materials shall be placed in such a way to prevent damage to the trench, structures, drainage areas or private property. Excavated materials shall not be placed on private property unless a temporary easement agreement is obtained from the property Owner by the Contractor.

J. The Contractor shall remove, relocate, change or protect all structures including but not limited to signs, mailboxes, overhead and buried utilities as required for construction whether shown on drawings or not. No extra compensation will be allowed for property damage, injury or loss of time due to obstructions encountered not shown on plans.

K. The Contractor shall be responsible for any damage to curb, gutter, sidewalk, traffic control devices, pavement material and lawns. Any damage resulting directly or indirectly shall be replaced in kind by the

Contractor without additional compensation. The reuse of disturbed curb, gutter or sidewalk is prohibited. New sections shall be installed to the nearest undisturbed control joint.

3.2 PIPELINE TRENCH BACKFILL

A. Materials excavated from the trench except topsoil shall be used for trench backfill, provided that, in the opinion of the Engineer, the excavated material is suitable for this purpose. Backfill material shall be free from large lumps, pavement, pieces of concrete and stones.

B. Suitable material, as approved by the Engineer, shall be carefully deposited in the trench by methods which will not damage or disturb the pipeline or structure, and shall be solidly tamped around the pipe or structure. Backfill material shall be placed in 8-inch layers. Compaction shall be accomplished by mechanical tampers. Care shall be taken in the use of mechanical tampers not to injure or move the pipe or to cause the pipe to be supported unevenly. Each layer shall be mechanically tamped for the full trench width unless an alternative method is approved in writing by the Engineer.

C. Every backfill layer shall be compacted to 95% of maximum density at optimum moisture content as determined by the Modified Proctor Test, ASTM D1557 Method C. Materials containing an excess of moisture shall be permitted to dry until the moisture content is within the specified range. Materials too dry shall be wetted uniformly until the moisture content is in the specified range. Backfilled trench sections which fail to meet density requirements three consecutive times shall be excavated and properly disposed of by the Contractor.

D. No compacting shall be done when the material is too wet to be compacted properly. At such times the work shall be suspended until the backfill materials have dried sufficiently to permit proper compaction or such other precautions shall be taken as may be necessary to obtain proper compaction. The Contractor is responsible for hauling, storing and drying of excavated material to be used in backfill operations within the prices bid.

E. The Contractor shall coordinate with the Construction Manager who will hire a geotechnical testing agency to provide compaction tests of the backfilled trenches during construction or upon completion of the backfill operations. Field density testing may be performed at a rate of 1 test per 100 linear feet of trench, at a depth specified by the Engineer. Such testing shall be arranged by the Contractor and performed by an independent testing agency approved by the Engineer.

F. Whenever test results indicate compaction densities less than specified, the Contractor shall, at his own expense, secure the specified compaction using methods approved by the Engineer. The testing agency, so employed by the Contractor, shall submit a copy of all testing reports directly to the Engineer. Each report shall contain the project identification name and number, name of Contractor, name of testing agency, and location of sample tested by station, street and depth, as a minimum.

G. The Contractor shall, at his own expense, maintain all refilled excavations in proper condition. Trench surfaces shall be reshaped when necessary. If the Contractor fails to make repairs within forty eight (48) hours after receipt of written notice from the Owner, the Owner may refill said depression wherever necessary and the cost of so doing will be retained from any monies due or to become due the Contractor under the Contract. The Contractor shall be fully responsible for any injury or damage that may result from lack of maintenance of any refilled excavation at any time prior to final acceptance.

H. All unauthorized excavations made by the Contractor shall be immediately backfilled in accordance with the requirements of the specifications for trench backfill at the Contractor's expense.

I. After completion of backfilling, all material not used shall be disposed of as approved by the Engineer, and all places on the line of the work shall be left clean and in good condition. This cleaning up shall be done by the Contractor without extra compensation. If he fails to do this work within a reasonable time after

receipt of notice, it will be performed by the Owner, and the cost will be retained from the monies due the Contractor under the contract.

J. No backfilling of pipelines will be allowed until measurements of pipe and an inspection has been performed by the Owner's representative, and until the Engineer has authorized the backfill. Any unauthorized backfill of pipelines shall be uncovered by the Contractor at his expense if required by the Engineer.

3.3 DEWATERING

A. All excavations must be kept free of water below the subgrade of the work while work is in progress. This may be accomplished by ordinary pumping methods or by well points, whichever will produce the required results. Upon removal of dewatering equipment, the Contractor shall backfill all holes and restore disturbed areas to their original condition.

B. Dewatering for the structures and pipelines shall commence when groundwater is first encountered and shall be continued until such time as backfill has been completed. No concrete or pipe shall be laid in water nor shall water be allowed to rise over them until the concrete or mortar has set at least eight (8) hours. Groundwater shall not be allowed to rise around the pipe until the trench is backfilled.

C. The Contractor shall dispose of the water from the work in a suitable manner without damage to adjacent property. No water shall be drained into work built or under construction without prior consent of the Engineer. Water shall be disposed of in such a manner as not to damage property or be a menace to the Public Health.

D. In the event the Contractor's dewatering operations affect any water supplies within the project area, the Contractor shall take whatever steps that are required to provide uninterrupted water service.

E. The Contractor shall remove any siltation deposits in storm sewer systems, resulting from his dewatering or construction operations. He shall also be responsible for conveyance of dewatering flows and for erosion and sediment control.

3.4 SHEETING, SHORING AND BRACING

A. The contractor shall furnish and install all sheeting, shoring and bracing necessary to insure safe working conditions and to prevent damage to public and private property and structures. If, in the opinion of the Engineer, the sheeting, shoring, or bracing is not of proper quality or is not properly placed to insure safe working conditions and to prevent property damage, the Contractor shall remedy such inadequacy at his own expense as may be directed by the Engineer. Sheeting, shoring, and bracing shall be removed as backfilling progresses, except at such locations as the Engineer may direct or approve it to be left in place.

B. The condition of all excavations made by the Contractor shall be the responsibility of the Contractor. No extra compensation will be allowed for property damage, injury or loss of time, due to excavation slides or cave-ins at any time under any circumstances.

C. The Contractor shall cut off any sheeting left in place, at least eighteen (18) inches below finished grade, and shall remove the material cut off without compensation.

D. Where necessary, in quicksand, soft ground, or for the protection of any structure or property, sheeting shall be driven to such depth below the bottom of the trench as may be required to protect all existing and/or proposed work.

E. The cost for furnishing, placing and removal of sheeting, shoring or bracing shall be included in the prices bid.

F. A trench box is an acceptable alternative to sheeting, shoring or bracing providing such boxes conform to safety codes.

3.5 SELECT BACKFILL

A. Should the Contractor encounter unsuitable material during excavation, he shall remove and dispose of such material at a location approved by the Engineer. The cost of such disposal shall be included in the prices bid for pipe and structures.

B. Should sufficient suitable material from excavations on the project not be available for backfill, the Contractor shall furnish Select Backfill upon approval of the Engineer. Special backfill shall conform to Delaware Department of Transportation Standard Specifications.

3.6 LAYING BRICK

A. All brickwork shall be laid by competent mechanics.

B. All brick shall be laid in a full bed of mortar with all vertical and horizontal joints filled solid with mortar.

C. Joints shall be not less than 3/8-inch or more than 1/2-inch wide except as otherwise specified in (E) below.

D. No brickwork shall be laid when the temperature is below 40 degrees or when the indications are for lower temperature within 24 hours. The contractor shall take such measures as may be approved to prevent brickwork from being exposed to freezing temperatures for a period of not less than five days after laying.

E. Special care shall be taken in laying brick in inverts of manholes to insure a uniform flow of water through the sections. In such locations, joints shall not exceed 1/16-inch in thickness and each brick shall be laid in full mortar bed with joints on bottom side and end made in one operation. No grouting or working in of mortar after laying the brick will be permitted.

3.7 MANHOLE TESTS

A. If inspection reveals any visible leakage or seepage in any manhole, the contractor will be required to accomplish such remedial measures as may be directed by the Engineer. Caulking or patching of interior manhole surfaces will not be acceptable.

3.8 PIPE INSTALLATION

A. Pipe and fittings shall be carefully handled and lowered into the trench. Special care shall be taken to insure that each length shall abut against the next in such a manner that there shall be no shoulder or unevenness of any kind along the inside of the pipe.

B. Before pipe is placed, the bottom of the trench shall be carefully shaped to fit the lower part of the pipe exterior with reasonable closeness for width of at least 60% of the pipe width. Bell holes shall be dug sufficiently large to insure the making of proper joints and so that after placement, only the barrel of the pipe receives bearing pressure from the trench bottom. No pipe shall be brought into position until the

preceding length has been thoroughly bedded and secure in place. Any defects due to settlement shall be made good by the Contractor without additional compensation therefore.

C. Proper and suitable tools and appliances for the safe and convenient handling and laying of pipe shall be used.

D. Whenever a pipe requires cutting to fit into the line or to bring it to the required location, the work shall be done in a satisfactory manner so as to leave a smooth end.

E. The pipes shall be thoroughly cleaned before they are laid and shall be kept clean until the acceptance of the completed work. The open ends of all pipe lines shall be provided with a stopper carefully fitted so as to keep dirt and other substances from entering. This stopper shall be kept in the end of the pipe line at all times when laying is not in actual progress.

F. All concrete required to support and reinforce wye branches, bends and other fittings shall be placed as directed, and the cost thereof shall be included and covered within the price bid.

G. Backfill materials shall be hand placed and mechanically tamped in six inch layers, placed uniformly on both sides of the pipe, to a point at least one foot above the pipe crown. Each layer shall be thoroughly compacted for the full trench width and under, around and over the pipe.

H. Pipeline detectable tape shall be installed continuously along all sewer mains. The tape shall be installed directly above the pipe and 12 inches from the ground surface. The tape shall be Lineguard type III Detectable tape as manufactured by Lineguard, Inc. of Wheaton, Illinois or equal. The tape shall be a minimum of two inches wide, imprinted in green with the words "CAUTION -- SEWER LINE BELOW" and be capable of being detected with inductive methods.

I. For refill of the remaining trench depth, refer to "Excavation and Backfill" Section of these specifications.

J. Pipe installation shall be achieved at the elevations identified on the contract drawings.

3.9 MANHOLE INSTALLATION

A. General: Install manholes complete with appurtenances and accessories indicated.

B. Install precast concrete manhole sections with sealants according to ASTM C 891.

C. Form continuous concrete channels and benches between inlets and outlet.

D. Set tops of frames and covers flush with finished surface of manholes that occur in pavements. Set tops 6 inches above finished surface in non-paved areas and place berm to top elevation per New Castle County Standard.

3.10 CONCRETE PLACEMENT

A. Place cast-in-place concrete according to ACI 318.

3.11 CLEANOUT INSTALLATION

A. Install cleanouts and riser extensions from sewer pipes to cleanouts at grade. Install piping so cleanouts open in direction of flow in sewer pipe.

1. Use Heavy-Duty, top-loading classification cleanouts in all areas. Cover shall read “SEWER” or “S”. Casting manufactured by East Jordan Iron Works Model 1574.

B. Set cleanout frames and covers in cast-in-place-concrete, 10 inches on all sides of riser pipe by 4 inches deep and placed 8 inches below grade. In non-paved areas place fill on concrete up to grade. In paved areas place pavement on concrete up to grade.

C. Set cleanout frames and covers in concrete pavement and roads with tops flush with pavement surface.

3.12 CONNECTIONS

A. Connect nonpressure, gravity-flow drainage piping to building's sanitary building drains specified in Section 221316 "Sanitary Waste and Vent Piping."

B. Make connections to existing underground manholes.
1. Make branch connections to underground manholes by cutting opening into existing unit large enough to allow for installation of pipe to manhole connector. Connector to be Z-Lok by A-Lok Products. Cut end of connection pipe passing through pipe or structure wall to conform to shape of and be flush with inside wall unless otherwise indicated. On outside of pipe or manhole wall, encase entering connection in 6 inches of concrete for minimum length of 12 inches to provide additional support of collar from connection to undisturbed ground.

   a. Use concrete that will attain a minimum 28-day compressive strength of 3000 psi unless otherwise indicated.
   b. Use epoxy-bonding compound as interface between new and existing concrete and piping materials.

2. Protect existing piping and manholes to prevent concrete or debris from entering while making tap connections. Remove debris or other extraneous material that may accumulate.

C. Connect to grease interceptors specified in Section 221323 "Sanitary Waste Interceptors."

3.13 LAYING PIPE IN FREEZING WEATHER

A. No pipe shall be laid upon a foundation into which frost has penetrated, nor at any time when the Engineer shall deem that there is danger of the formation of ice or the penetration of frost at the bottom of the excavation unless all required precautions as to the minimum length of open trench and promptness of backfilling are observed.

3.14 ARTIFICIAL FOUNDATION

A. Whenever directed, the Contractor shall lay pipe upon an artificial foundation which he shall construct. Such foundation may consist of gravel, sills, planks, or other timber construction, or of concrete; all to be of the form and dimensions and placed in the manner required by the Engineer.

3.15 PIPE TESTING

A. GENERAL

1. Contractor shall furnish all labor, tools, materials, and equipment, including mirrors, flashlights or other artificial lighting, pump, compressors, stopwatch, gauges, and meters, subject to the approval of the Engineer for testing in accordance with these specifications.

B. MIRROR TESTING OF SANITARY SEWERS

1. Upon completion of pipe laying and backfilling to a point at least two (2) feet above the crown of the pipe, the Engineer will conduct a mirror test to check for defects, excess deflection, leakage, and for horizontal or vertical misalignment. Mirror testing shall consist of reflecting sunlight or artificial light via mirrors through the completed section of pipeline, which, in order to be accepted, shall be true and straight in horizontal and vertical alignment to allow for the full passage of the reflected light.

C. LEAK TESTING USING AIR

1. Sewers shall be tested in sections not exceeding 400 feet unless otherwise approved by the Engineer. Each section shall be tested immediately upon completion thereof. Each section shall meet the air pressure drop limitations specified herein.

2. All material and labor required for leakage tests shall be furnished by the Contractor within the price bid.

3. Sewers shall be tested using the low-pressure air method in accordance with the requirements of ASTM C-828 and the Uni-Bell Plastic Pipe Association recommendations, based upon the Ramseier test time criteria. Procedural and equipment details shall be submitted to the Engineer prior to acceptance of its use for testing.

4. If the test time for the designated size and length, elapses before the test pressure drops 0.5 psig, the section undergoing the test shall have passed.

5. If the pressure drops 0.5 psig before the appropriate test time has elapsed, the air loss rate shall be considered excessive and the section of pipe has failed the test. Contractor shall determine at his own expense the source or sources of leakage and he shall repair or replace all defective materials and/or workmanship to the satisfaction of the Engineer. The completed pipe installation shall then be retested and required to meet the requirements of this test.

D. MANDREL TESTING OF SANITARY SEWERS

1. Sanitary sewer pipe shall be deflection tested not less than 30 days after the trench backfill and compaction has been completed. The test shall be conducted by pulling an approved solid pointed mandrel through the completed pipeline. The diameter of the mandrel shall be 95 percent of the inside diameter of the pipe. The mandrel shall be a rigid, non-adjustable mandrel having an effective length of not less than its nominal diameter.

2. Testing shall be conducted on a manhole to manhole basis and shall be done after the line has been completely cleaned and flushed. Any portion of the sewer which fails to pass the test shall be excavated, repaired or realigned and retested with both air and deflection tests.

3.16 DEFECTS TO BE MADE GOOD

A. If, at any time before the expiration of the guarantee period under this contract, any broken pipe, or any other defects are found in any of the lines or in any of the appurtenances, the Contractor shall cause the same to be removed and replaced by the proper material and workmanship, without extra compensation for the labor and material required, even though such injury or damage may not have been due to any act,

default, or negligence on the part of the Contractor. All materials shall be carefully examined by the Contractor for defects prior to installation, and any found defective shall be rejected for use.

END OF SECTION 221313

SECTION 22 30 00

PLUMBING EQUIPMENT

PART 1 GENERAL

1.01 SECTION INCLUDES

A. Water heaters.

B. Expansion Tanks.

C. Pumps.
   1. Circulators.
   2. Sump / Sewage Pumps.
   3. Cooling Condensate Removal Pumps.

1.02 RELATED REQUIREMENTS

A. Section 26 27 17 - Equipment Wiring: Electrical characteristics and wiring connections.

1.03 REFERENCE STANDARDS

A. ANSI Z21.10.1 - Gas Water Heaters - Volume I - Storage Water Heaters with Input Ratings of 75,000 Btu per Hour or Less.

B. ANSI Z21.10.3 - Gas Water Heaters - Volume III - Storage Water Heaters with Input Ratings Above 75,000 Btu per Hour, Circulating and Instantaneous Water Heaters.

C. ASME (BPV VIII, 1) - Boiler and Pressure Vessel Code, Section VIII, Division 1 - Rules for Construction of Pressure Vessels; The American Society of Mechanical Engineers.

1.04 SUBMITTALS

A. Product Data:
   1. Provide dimension drawings of water heaters indicating components and connections to other equipment and piping.
   2. Indicate pump type, capacity, power requirements.
   3. Provide certified pump curves showing pump performance characteristics with pump and system operating point plotted. Include NPSH curve when applicable.
   4. Provide electrical characteristics and connection requirements.

B. Shop Drawings:
   1. Indicate heat exchanger dimensions, size of tappings, and performance data.
   2. Indicate dimensions of tanks, tank lining methods, anchors, attachments, lifting points, tappings, and drains.

C. Manufacturer's Instructions.

D. Project Record Documents: Record actual locations of components.

E. Operation and Maintenance Data: Include operation, maintenance, and inspection data, replacement part numbers and availability, and service depot location and telephone number.

F. Warranty: Submit manufacturer warranty and ensure forms have been completed in Red Clay Consolidated School District's name and registered with manufacturer.

1.05 QUALITY ASSURANCE

A. Manufacturer Qualifications: Company specializing in manufacturing the type of products specified in this section, with minimum three years of experience.

B. Identification: Provide pumps with manufacturer's name, model number, and rating/capacity identified by permanently attached label.

C. Performance: Ensure pumps operate at specified system fluid temperatures without vapor binding and cavitation, are non-overloading in parallel or individual operation, operate within 25 percent of midpoint of published maximum efficiency curve.

1.06 CERTIFICATIONS

A. Water Heaters: NSF approved.

B. Gas Water Heaters: Certified by CSA International to ANSI Z21.10.1 or ANSI Z21.10.3, as applicable, in addition to requirements specified elsewhere.

C. Products Requiring Electrical Connection: Listed and classified by Underwriters Laboratories Inc., or testing firm acceptable to the authority having jurisdiction as suitable for the purpose specified and indicated.

1.07 DELIVERY, STORAGE, AND HANDLING

A. Provide temporary inlet and outlet caps. Maintain caps in place until installation.

1.08 WARRANTY

A. Provide five year manufacturer warranty for domestic water heaters and in-line circulator.

1.09 EXTRA MATERIALS

A. Provide two pump seals.

PART 2 PRODUCTS

2.01 COMMERCIAL GAS FIRED WATER HEATERS

A. Type: Automatic, tankless, stainless-steel natural gas-fired.

B. Manufacturers:
   1. Noritz
   2. Rinnai
   3. Substitutions: See Section 01 60 00 - Product Requirements.

C. Performance: See plans.

D. Accessories: Provide:
   1. Venting Kit.
   2. Isolation Valves

E. Certification: As water heater by ASME, rated for output temperatures of 100 to 180 degrees F..

F. Controls: Digital controls for output temperature management (default setting at 120 degrees), safety controls for flame failure, boiling protection, combustion fan failure, over-current, and gas valve failure..

2.02 DIAPHRAGM-TYPE COMPRESSION TANKS

A. Manufacturers:
   1. Amtrol Inc: www.amtrol.com.
   2. ITT Bell & Gossett: www.bellgossett.com.
   3. Taco, Inc: www.taco-hvac.com.

B. Construction: Welded steel, tested and stamped in accordance with ASME (BPV VIII, 1); supplied with National Board Form U-1, rated for working pressure of 125 psig, with flexible diaphragm sealed into tank, and steel legs or saddles.

C. Accessories: Pressure gage and air-charging fitting, tank drain; precharge to 55 psig.

2.03 IN-LINE CIRCULATOR PUMPS

A. Manufacturers:
   1. Armstrong Pumps Inc: www.armstrongpumps.com.
   2. ITT Bell & Gossett: www.bellgossett.com.
   3. SIHI Group: www.sterlingsihi.com.
   4. Substitutions: See Section 01 60 00 - Product Requirements.

B. Casing: Bronze, rated for 125 psig working pressure.

C. Impeller: Bronze.

D. Shaft: Alloy steel with integral thrust collar and two oil lubricated bronze sleeve bearings.

E. Seal: Carbon rotating against a stationary ceramic seat.

F. Drive: Flexible coupling.

2.04 COOLING CONDENSATE REMOVAL PUMPS

A. Construction: Commercial grade, nonferrous pump with stainless steel shaft, integral discharge check valve, integral float switch, safety switch, thermoplastic reservoir, motor assembly, and power cord with ground.

B. Safety: UL 778.

PART 3 EXECUTION

3.01 INSTALLATION

A. Install plumbing equipment in accordance with manufacturer's instructions, as required by code, and complying with conditions of certification, if any.

B. Coordinate with plumbing piping and related gas venting and electrical work to achieve operating system.

C. Pumps:
   1. Provide air cock and drain connection on horizontal pump casings.
   2. Provide line sized isolating valve and strainer on suction and line sized soft seated check valve and balancing valve on discharge.
   3. Decrease from line size with long radius reducing elbows or reducers. Support piping adjacent to pump such that no weight is carried on pump casings. Provide supports under elbows on pump suction and discharge line sizes 4 inches and over.
   4. Ensure pumps operate at specified system fluid temperatures without vapor binding and cavitation, are non-overloading in parallel or individual operation, and operate within 25 percent of midpoint of published maximum efficiency curve.
   5. Align and verify alignment of base mounted pumps prior to start-up.

END OF SECTION

SECTION 22 40 00

PLUMBING FIXTURES

PART 1 GENERAL

1.01 SECTION INCLUDES

A. Water closets.

B. Urinals.

C. Lavatories.

D. Sinks.

E. Service sinks.

F. Drinking fountains.

1.02 RELATED REQUIREMENTS

A. Section 07 90 05 - Joint Sealers: Seal fixtures to walls and floors.

B. Section 22 10 05 - Plumbing Piping.

C. Section 22 10 06 - Plumbing Piping Specialties.

D. Section 22 30 00 - Plumbing Equipment.

E. Section 26 27 17 - Equipment Wiring: Electrical characteristics and wiring connections.

1.03 REFERENCE STANDARDS

A. ANSI Z124.1 - American National Standard for Plastic Bathtub Units.

B. ANSI Z124.2 - American National Standard for Plastic Shower Units.

C. ANSI Z124.1.2 - American National Standard for Plastic Bathtub and Shower Units.

D. ANSI Z358.1 - American National Standard for Emergency Eyewash and Shower Equipment.

E. ARI 1010 - Self-Contained, Mechanically-Refrigerated Drinking-Water Coolers; Air-Conditioning and Refrigeration Institute.

F. ASME A112.6.1M - Supports for Off-the-Floor Plumbing Fixtures for Public Use; The American Society of Mechanical Engineers.

G. ASME A112.18.1 - Plumbing Supply Fittings; The American Society of Mechanical Engineers.

H. ASME A112.19.1M - Enameled Cast Iron Plumbing Fixtures; The American Society of Mechanical Engineers.

I. ASME A112.19.2 - Vitreous China Plumbing Fixtures and Hydraulic Requirements for Water Closets and Urinals; The American Society of Mechanical Engineers.

J. ASME A112.19.3 - Stainless Steel Plumbing Fixtures (Designed for Residential Use); The American Society of Mechanical Engineers.

K. ASME A112.19.4M - Porcelain Enameled Formed Steel Plumbing Fixtures; The American Society of Mechanical Engineers.

L. ASME A112.19.5 - Trim for Water-Closet Bowls, Tanks and Urinals; The American Society of Mechanical Engineers.

M. ASME A112.19.14 - Six Liter Water Closets Equipped with Dual Flushing Device.

1.04 SUBMITTALS

A. Product Data: Provide catalog illustrations of fixtures, sizes, rough-in dimensions, utility sizes, trim, and finishes.

B. Samples: Submit two sets of color chips for each standard color.

C. Manufacturer's Instructions: Indicate installation methods and procedures.

D. Maintenance Data: Include fixture trim exploded view and replacement parts lists.

E. Waterless Urinals: Submit recommended frequency of maintenance and parts replacement, methods of cleaning, sources of replacement supplies and parts.

F. Warranty: Submit manufacturer warranty and ensure forms have been completed in Red Clay Consolidated School District's name and registered with manufacturer.

1.05 QUALITY ASSURANCE

A. Manufacturer Qualifications: Company specializing in manufacturing the type of products specified in this section, with minimum three years of experience.

1.06 REGULATORY REQUIREMENTS

A. Products Requiring Electrical Connection: Listed and classified by Underwriters Laboratories Inc., or testing firm acceptable to the authority having jurisdiction as suitable for the purpose specified and indicated.

1.07 MOCK-UP

A. Provide mock-up of typical bathroom group.

B. Mock-up may remain as part of the Work.

1.08 DELIVERY, STORAGE, AND HANDLING

A. Accept fixtures on site in factory packaging. Inspect for damage.

B. Protect installed fixtures from damage by securing areas and by leaving factory packaging in place to protect fixtures and prevent use.

1.09 WARRANTY

A. Provide five year manufacturer warranty for electric water cooler.

1.10 EXTRA MATERIALS

A. Supply two sets of faucet washers, flush valve service kits, and lavatory supply fittings.

PART 2 PRODUCTS

2.01 FLUSH VALVE WATER CLOSETS

A. Water Closets: Vitreous china, ASME A112.19.2, floor mounted, siphon jet flush action, china bolt caps.
   1. Flush Volume: 1.28 gallon, maximum.

2. Flush Valve: Exposed (top spud).
3. Flush Operation: Sensor operated, push-button override.
4. Handle Height: 44 inches or less.
5. Manufacturers:
   a. American Standard Inc: www.americanstandard.com.
   b. Kohler.
   c. Toto USA: www.totousa.com.
   d. Zurn Industries, Inc: www.zurn.com.
   e. Substitutions: See Section 01 60 00 - Product Requirements.

B. Flush Valves: ASME A112.18.1, diaphragm type, complete with vacuum breaker stops and accessories.
1. Sensor-Operated Type: Solenoid operator, battery powered with self-generating hydro-electric turbine, infrared sensor and over-ride push button.
2. ASME A112.19.2; floor mounted, siphon jet or wall hung blow out vitreous china closet bowl, with elongated rim, 1-1/2 inch top spud, china bolt caps.
3. Manufacturers:
   a. Toto USA: www.totousa.com
   b. Sloan Valve Company: www.sloanvalve.com.
   c. Zurn Industries, Inc: www.zurn.com.
   d. Substitutions: See Section 01 60 00 - Product Requirements.

C. Seats:
1. Manufacturers:
   a. Kohler
   b. Bemis Manufacturing Company: www.bemismfg.com.
   c. Church Seat Company: www.churchseats.com.
   d. Olsonite: www.olsonite.com.
   e. Substitutions: See Section 01 60 00 - Product Requirements.
2. Solid plastic, open front, extended back, brass bolts, with cover.

D. Water Closet Carriers:
1. Manufacturers:
   a. JR Smith.
   b. Sloan Valve Company: www.sloanvalve.com.
   c. Zurn Industries, Inc: www.zurn.com.
   d. Substitutions: See Section 01 60 00 - Product Requirements.
2. ASME A112.6.1M; adjustable cast iron frame, integral drain hub and vent, adjustable spud, lugs for floor and wall attachment, threaded fixture studs with nuts and washers.

2.02 WALL HUNG URINALS

A. Wall Hung Urinal Manufacturers:
1. Kohler Company: www.kohler.com.
2. Zurn Industries, Inc: www.zurn.com.

B. Urinals: Vitreous china, ASME A112.19.2, wall hung with side shields and concealed carrier.
1. Flush Volume: 1/8 gallon (0.5 liter).
2. Flush Style: Washout.
3. Trap: Integral.

C. Flush Valves: ASME A112.18.1, diaphragm type, complete with vacuum breaker stops and accessories.
1. Sensor-Operated Type: Solenoid operator, battery powered with self-generating hydro-electric turbine, infrared sensor and over-ride push button.

D. Carriers:
   1. Manufacturers:
      a. JR Smith
      b. Sloan Valve Company: www.sloanvalve.com.
      c. Zurn Industries, Inc: www.zurn.com.
   2. ASME A112.6.1M; cast iron and steel frame with tubular legs, lugs for floor and wall attachment, threaded fixture studs for fixture hanger, bearing studs.

2.03 LAVATORIES

A. Lavatory Manufacturers:
   1. American Standard Inc
   2. Eljer
   3. Kohler Company: www.kohler.com.
   4. Zurn Industries, Inc: www.zurn.com.
   5. Substitutions: See Section 01 60 00 - Product Requirements.

B. Sensor Operated Faucet: Cast brass, chrome plated, deck mounted with sensor located on neck of spout.
   1. Spout Style: Standard,
   2. Power Supply: Self-generating, hydro-powered turbine charging rechargeable battery.
   3. Mixing Valve: automatic.
   4. Water Supply: 1/2 inch compression connections.
   5. Aerator: Vandal resistant, 1 GPM,.
   6. Automatic Shut-off: 30 seconds.
   7. Sensor range: Automatically adjusts.
      a. Accessory: Optional remote reprogrammer module to adjust pre-set factory functions.
   8. Finish: Polished chrome.
   9. Accessory: 4 inch or 8 inch deck plate.
   10. Sensor Operated Faucet Manufacturers:
      a. American Standard Inc: www.americanstandard.com.
      b. Sloan Valve Company: www.sloanvalve.com.
      c. Toto USA: www.totousa.com.
      d. Zurn industries, Inc: www.zurn.com.

C. Accessories:
   1. Chrome plated 17 gage brass P-trap with clean-out plug and arm with escutcheon.
   2. Offset waste with perforated open strainer.
   3. Screwdriver stops.
   4. Rigid supplies.
   5. Carrier:
      a. Manufacturers:
         1) JR Smith
         2) Sloan Valve Company: www.sloanvalve.com.
         3) Zurn Industries, Inc: www.zurn.com.
      b. ASME A112.6.1M; cast iron and steel frame with tubular legs, lugs for floor and wall attachment, threaded studs for fixture hanger, or concealed arm supports bearing plate and studs.

2.04 WATER FOUNTAINS

A. Electric Water Cooler Manufacturers:
   1. Tri Palm International/Oasis: www.tripalmint.com.
   2. Elkay Manufacturing Company: www.elkay.com.

3. Haws Corporation: www.hawsco.com.

B. Fountain:
1. A surface handicapped-height, fully ADA compliant mounted water fountain with stainless steel top, stainless steel; stainless steel body, elevated anti-squirt bubbler with stream guard, automatic stream regulator, push button, bottle filling station, and mounting bracket.

2.05 SERVICE SINKS

A. Service Sink Manufacturers:
1. Kohler
2. Elkay Manufacturing Company: www.elkay.com.

B. Bowl:
1. WHite floor mounted, with one inch wide shoulders. Vinyl bumper guard stainless steel strainer.

C. Trim:
1. ASME A112.18.1 exposed wall type supply with cross handles, spout wall brace, vacuum breaker, hose end spout, strainers, eccentric adjustable inlets, integral screwdriver stops with covering caps and adjustable threaded wall flanges.

D. Accessories:
1. 5 feet of 1/2 inch diameter plain end reinforced plastic or rubber hose.
2. Hose clamp hanger.

PART 3 EXECUTION

3.01 EXAMINATION

A. Verify that walls and floor finishes are prepared and ready for installation of fixtures.

B. Verify that electric power is available and of the correct characteristics.

C. Confirm that millwork is constructed with adequate provision for the installation of counter top lavatories and sinks.

3.02 PREPARATION

A. Rough-in fixture piping connections in accordance with minimum sizes indicated in fixture rough-in schedule for particular fixtures.

3.03 INSTALLATION

A. Install each fixture with trap, easily removable for servicing and cleaning.

B. Provide chrome plated rigid or flexible supplies to fixtures with screwdriver stops, reducers, and escutcheons.

C. Install components level and plumb.

D. Install and secure fixtures in place with wall supports or wall carriers and bolts.

E. Seal fixtures to wall and floor surfaces with sealant as specified in Section 07 90 05, color to match fixture.

F. Solidly attach water closets to floor with lag screws. Lead flashing is not intended hold fixture in place.

3.04 INTERFACE WITH WORK OF OTHER SECTIONS

A. Review millwork shop drawings. Confirm location and size of fixtures and openings before rough-in and installation.

3.05 ADJUSTING

A. Adjust stops or valves for intended water flow rate to fixtures without splashing, noise, or overflow.

3.06 CLEANING

A. Clean plumbing fixtures and equipment.

END OF SECTION

SECTION 23 05 13

MOTOR REQUIREMENTS FOR HVAC AND PLUMBING EQUIP

PART 1 GENERAL

1.01 SECTION INCLUDES

A. Single phase electric motors.

B. Three phase electric motors.

1.02 RELATED REQUIREMENTS

A. Section 26 27 17 - Equipment Wiring: Electrical characteristics and wiring connections.

B. Section 26 29 13 - Enclosed Controllers.

1.03 REFERENCE STANDARDS

A. ABMA STD 9 - Load Ratings and Fatigue Life for Ball Bearings; American Bearing Manufacturers Association, Inc..

B. IEEE 112 - IEEE Standard Test Procedure for Polyphase Induction Motors and Generators; Institute of Electrical and Electronic Engineers.

C. NEMA MG 1 - Motors and Generators; National Electrical Manufacturers Association.

D. NFPA 70 - National Electrical Code; National Fire Protection Association.

E. National Grid "Motor-Up" Rebate Program/Initiative.

1.04 SUBMITTALS

A. Product Data: Provide wiring diagrams with electrical characteristics and connection requirements.

B. Test Reports: Indicate test results verifying nominal efficiency and power factor for three phase motors larger than 1/2 horsepower.

C. Manufacturer's Installation Instructions: Indicate setting, mechanical connections, lubrication, and wiring instructions.

D. Operation Data: Include instructions for safe operating procedures.

E. Maintenance Data: Include assembly drawings, bearing data including replacement sizes, and lubrication instructions.

1.05 QUALITY ASSURANCE

A. Manufacturer Qualifications: Company specializing in manufacture of electric motors for HVAC use, and their accessories, with minimum three years documented product development, testing, and manufacturing experience.

B. Conform to applicable electrical code, NFPA 70 and local energy code.

C. Provide certificate of compliance from authority having jurisdiction indicating approval of high efficiency motors.

D. Products Requiring Electrical Connection: Listed and classified by Underwriters' Laboratories, Inc. or testing firm acceptable to the authority having jurisdiction as suitable for the purpose specified and indicated.

1.06 DELIVERY, STORAGE, AND HANDLING

A. Protect motors stored on site from weather and moisture by maintaining factory covers and suitable weather-proof covering. For extended outdoor storage, remove motors from equipment and store separately.

1.07 WARRANTY

A. Provide five year manufacturer warranty for motors larger than 20 horsepower.

PART 2 PRODUCTS

2.01 MANUFACTURERS

A. Lincoln Motors: www.lincolnmotors.com.

B. A. O. Smith Electrical Products Company: www.aosmithmotors.com.

C. Reliance Electric/Rockwell Automation: www.reliance.com.

2.02 GENERAL CONSTRUCTION AND REQUIREMENTS

A. Electrical Service: Refer to Section 26 27 17 for required electrical characteristics.

B. Electrical Service, General. See drawings for specific details:
   1. Motors 1/2 HP and Smaller: 115 volts, single phase, 60 Hz
   2. Motors Larger than 1/2 Horsepower: 460 volts, three phase, 60 Hz.

C. Construction:
   1. Open drip-proof type except where specifically noted otherwise.
   2. Design for continuous operation in 40 degrees C environment.
   3. Design for temperature rise in accordance with NEMA MG 1 limits for insulation class, service factor, and motor enclosure type.
   4. Motors with frame sizes 254T and larger: Premium Efficiency Type.

D. Explosion-Proof Motors: UL approved and labelled for hazard classification, with over temperature protection.

E. Visible Nameplate: Indicating motor horsepower, voltage, phase, cycles, RPM, full load amps, locked rotor amps, frame size, manufacturer's name and model number, service factor, power factor.

F. Wiring Terminations:
   1. Provide terminal lugs to match branch circuit conductor quantities, sizes, and materials indicated. Enclose terminal lugs in terminal box sized to NFPA 70, threaded for conduit.
   2. For fractional horsepower motors where connection is made directly, provide conduit connection in end frame.

2.03 APPLICATIONS

A. Exception: Motors less than 250 watts, for intermittent service may be the equipment manufacturer's standard and need not conform to these specifications.

B. Single phase motors for shaft mounted fans and centrifugal pumps: Split phase type.

C. Single phase motors for shaft mounted fans or blowers: Permanent split capacitor type or electronically commutated (ECM) type. See schedules for requirements.

D. Single phase motors for fans, pumps, and blowers: Capacitor start type.

E. Single phase motors for fans, blowers, and pumps: Capacitor start, capacitor run type.

F. Motors located in outdoors and in draw through cooling towers: Totally enclosed weatherproof epoxy-treated type.

2.04 SINGLE PHASE POWER - SPLIT PHASE MOTORS

A. Starting Torque: Less than 150 percent of full load torque.

B. Starting Current: Up to seven times full load current.

C. Breakdown Torque: Approximately 200 percent of full load torque.

D. Drip-proof Enclosure: Class A (50 degrees C temperature rise) insulation, NEMA Service Factor, prelubricated sleeve or ball bearings.

E. Enclosed Motors: Class A (50 degrees C temperature rise) insulation, 1.0 Service Factor, prelubricated ball bearings.

2.05 SINGLE PHASE POWER - PERMANENT-SPLIT CAPACITOR MOTORS

A. Starting Torque: Exceeding one fourth of full load torque.

B. Starting Current: Up to six times full load current.

C. Multiple Speed: Through tapped windings.

D. Open Drip-proof or Enclosed Air Over Enclosure: Class A (50 degrees C temperature rise) insulation, minimum 1.0 Service Factor, prelubricated sleeve or ball bearings, automatic reset overload protector.

2.06 SINGLE PHASE POWER - CAPACITOR START MOTORS

A. Starting Torque: Three times full load torque.

B. Starting Current: Less than five times full load current.

C. Pull-up Torque: Up to 350 percent of full load torque.

D. Breakdown Torque: Approximately 250 percent of full load torque.

E. Motors: Capacitor in series with starting winding; provide capacitor-start/capacitor-run motors with two capacitors in parallel with run capacitor remaining in circuit at operating speeds.

F. Drip-proof Enclosure: Class A (50 degrees C temperature rise) insulation, NEMA Service Factor, prelubricated sleeve bearings.

G. Enclosed Motors: Class A (50 degrees C temperature rise) insulation, 1.0 Service Factor, prelubricated ball bearings.

2.07 THREE PHASE POWER - SQUIRREL CAGE MOTORS

A. Starting Torque: Between 1 and 1-1/2 times full load torque.

B. Starting Current: Six times full load current.

C. Power Output, Locked Rotor Torque, Breakdown or Pull Out Torque: NEMA Design B characteristics.

D. Design, Construction, Testing, and Performance: Conform to NEMA MG 1 for Design B motors.

E. Insulation System: NEMA Class B or better.

F. Testing Procedure: In accordance with IEEE 112. Load test motors to determine free from electrical or mechanical defects in compliance with performance data.

G. Motor Frames: NEMA Standard T-Frames of steel, aluminum, or cast iron with end brackets of cast iron or aluminum with steel inserts.

H. Thermistor System (Motor Frame Sizes 254T and Larger): Three PTC thermistors embedded in motor windings and epoxy encapsulated solid state control relay for wiring into motor starter; refer to Section 26 29 13.

I. Bearings: Grease lubricated anti-friction ball bearings with housings equipped with plugged provision for relubrication, rated for minimum ABMA STD 9, L-10 life of 20,000 hours. Calculate bearing load with NEMA minimum V-belt pulley with belt center line at end of NEMA standard shaft extension. Stamp bearing sizes on nameplate.

J. Sound Power Levels: To NEMA MG 1.

K. Part Winding Start Above 254T Frame Size: Use part of winding to reduce locked rotor starting current to approximately 60 percent of full winding locked rotor current while providing approximately 50 percent of full winding locked rotor torque.

L. Weatherproof Epoxy Sealed Motors: Epoxy seal windings using vacuum and pressure with rotor and starter surfaces protected with epoxy enamel; bearings double shielded with waterproof non-washing grease.

M. Nominal Efficiency: As scheduled at full load and rated voltage when tested in accordance with IEEE 112.

N. Nominal Power Factor: As scheduled at full load and rated voltage when tested in accordance with IEEE 112.

PART 3 EXECUTION

3.01 INSTALLATION

A. Install in accordance with manufacturer's instructions.

B. Install securely on firm foundation. Mount ball bearing motors with shaft in any position.

C. Check line voltage and phase and ensure agreement with nameplate.

D. Provide detailed installation and purchase information for reimbursement by Utility for rebate program.

3.02 SCHEDULE - Premium Efficiency

A. NEMA Open Motor Service Factors.
   1. 1/6-1/3 hp:
      a. 3600 rpm: 1.35.
      b. 1800 rpm: 1.35.
      c. 1200 rpm: 1.35.
      d. 900 rpm: 1.35.
   2. 1/2 hp:
      a. 3600 rpm: 1.25.
      b. 1800 rpm: 1.25.
      c. 1200 rpm: 1.25.
      d. 900 rpm: 1.15.
   3. 3/4 hp:
      a. 3600 rpm: 1.25.

b. 1800 rpm: 1.25.
c. 1200 rpm: 1.15.
d. 900 rpm: 1.15.

4. 1 hp:
   a. 3600 rpm: 1.25.
   b. 1800 rpm: 1.15.
   c. 1200 rpm: 1.15.
   d. 900 rpm: 1.15.
5. 1.5-150 hp:
   a. 3600 rpm: 1.15.
   b. 1800 rpm: 1.15.
   c. 1200 rpm: 1.15.
   d. 900 rpm: 1.15.

B. Three Phase - Premium Efficiency, Open Drip-Proof Performance:
1. Ratings.
   a. 1 hp:
      1) NEMA Frame: 145T.
      2) Minimum Percent Power Factor: 72.
      3) Minimum Percent Efficiency: 82.5% @ 1200 RPM, 85.5%@ 1800 RPM, 77% @ 3600 RPM
   b. 1-1/2 hp:
      1) NEMA Frame: 182T.
      2) Minimum Percent Power Factor: 73.
      3) Minimum Percent Efficiency: 86.5% @ 1200 RPM, 86.5% @ 1800 RPM, 84% @ 3600 RPM
   c. 2 hp:
      1) NEMA Frame: 184T.
      2) Minimum Percent Power Factor: 75.
      3) Minimum Percent Efficiency: 87.5% @ 1200 RPM, 86.5% @ 1800 RPM, 85.5% @ 3600 RPM
   d. 3 hp:
      1) NEMA Frame: 213T.
      2) Minimum Percent Power Factor: 60.
      3) Minimum Percent Efficiency: 88.5% @ 1200 RPM, 89.5% @ 1800 RPM, 85.5% @ 3600 RPM
   e. 5 hp:
      1) NEMA Frame: 215T.
      2) Minimum Percent Power Factor: 65.
      3) Minimum Percent Efficiency: 89.5% @ 1200 RPM, 89.5% @ 1800 RPM, 86.5% @ 3600 RPM
   f. 7-1/2 hp:
      1) NEMA Frame: 254T.
      2) Minimum Percent Power Factor: 73.
      3) Minimum Percent Efficiency: 90.2% @ 1200 RPM, 91% @ 1800 RPM, 88.5% @ 3600 RPM
   g. 10 hp:
      1) NEMA Frame: 256T.
      2) Minimum Percent Power Factor: 74.
      3) Minimum Percent Efficiency: 91.7% @ 1200 RPM, 91.7% @ 1800 RPM, 89.5% @ 3600 RPM
   h. 15 hp:
      1) NEMA Frame: 284T.
      2) Minimum Percent Power Factor: 77.

3) Minimum Percent Efficiency: 91.7% @ 1200 RPM, 93% @ 1800 RPM, 90.2% @ 3600 RPM.

i. 20 hp:
1) NEMA Frame: 286T.
2) Minimum Percent Power Factor: 78.
3) Minimum Percent Efficiency: 92.4% @ 1200 RPM, 93% @ 1800 RPM, 91% @ 3600 RPM

j. 25 hp:
1) NEMA Frame: 324T.
2) Minimum Percent Power Factor: 74.
3) Minimum Percent Efficiency: 93% @ 1200 RPM, 93.6% @ 1800 RPM, 91.7% @ 3600 RPM

k. 30 hp:
1) NEMA Frame: 326T.
2) Minimum Percent Power Factor: 78.
3) Minimum Percent Efficiency: 93.6% @ 1200 RPM, 94.1% @ 1800 RPM, 91.7% @ 3600 RPM

l. 40 hp:
1) NEMA Frame: 364T.
2) Minimum Percent Power Factor: 77.
3) Minimum Percent Efficiency: 94.1% @ 1200 RPM, 94.1 @ 1800 RPM, 92.4% @ 3600 RPM

m. 50 hp:
1) NEMA Frame: 365T.
2) Minimum Percent Power Factor: 79.
3) Minimum Percent Efficiency: 94.1% @ 1200 RPM, 94.5% @ 1800 RPM, 93% @ 3600 RPM

n. 60 hp:
1) NEMA Frame: 404T.
2) Minimum Percent Power Factor: 82.
3) Minimum Percent Efficiency: 93.

o. 75 hp:
1) NEMA Frame: 405T.
2) Minimum Percent Power Factor: 80.
3) Minimum Percent Efficiency: 93.

p. 100 hp:
1) NEMA Frame: 444T.
2) Minimum Percent Power Factor: 80.
3) Minimum Percent Efficiency: 93.

C. Three Phase - Premuim Efficiency, Totally Enclosed, Fan Cooled Performance:

1. 1200 rpm.

a. 1 hp:
1) NEMA Frame: 145T.
2) Minimum Percent Power Factor: 72.
3) Minimum Percent Efficiency: 82.5% @ 1200 RPM, 85.5% 2 1800 RPM, 77% @ 3600 RPM

b. 1-1/2 hp:
1) NEMA Frame: 182T.
2) Minimum Percent Power Factor: 73.
3) Minimum Percent Efficiency: 87.5% @ 1200 RPM, 86.5% @ 1800 RPM, 84% @ 3600 RPM

c. 2 hp:
1) NEMA Frame: 184T.

2) Minimum Percent Power Factor: 68.
3) Minimum Percent Efficiency: 88.5% @ 1200 RPM, 86.5% @ 1800 RPM, 85.5% @ 3600 RPM

d. 3 hp:
1) NEMA Frame: 213T.
2) Minimum Percent Power Factor: 63.
3) Minimum Percent Efficiency: 89.5% @ 1200 RPM, 89.5% @ 1800 RPM, 86.5% @ 3600 RPM

e. 5 hp:
1) NEMA Frame: 215T.
2) Minimum Percent Power Factor: 66.
3) Minimum Percent Efficiency: 89.5% @ 1200 RPM, 89.5% @ 1800 RPM, 88.5% @ 3600 RPM

f. 7-1/2 hp:
1) NEMA Frame: 254T.
2) Minimum Percent Power Factor: 68.
3) Minimum Percent Efficiency: 91% @ 1200 RPM, 91.7% @ 1800 RPM, 89.5% @ 3600 RPM

g. 10 hp:
1) NEMA Frame: 256T.
2) Minimum Percent Power Factor: 75.
3) Minimum Percent Efficiency: 91% @ 1200 RPM, 91.7% @ 1800 RPM, 90.2% @ 3600 RPM

h. 15 hp:
1) NEMA Frame: 284T.
2) Minimum Percent Power Factor: 72.
3) Minimum Percent Efficiency: 91.7% @ 1200 RPM, 92.4% @ 1800 RPM, 91% @ 3600 RPM

i. 20 hp:
1) NEMA Frame: 286T.
2) Minimum Percent Power Factor: 76.
3) Minimum Percent Efficiency: 91.7% @ 1200 RPM, 93% @ 1800 RPM, 91% @ 3600 RPM

j. 25 hp:
1) NEMA Frame: 324T.
2) Minimum Percent Power Factor: 71.
3) Minimum Percent Efficiency: 93% @ 1200 RPM, 93.6% @ 1800 RPM, 91.7% @ 3600 RPM

k. 30 hp:
1) NEMA Frame: 326T.
2) Minimum Percent Power Factor: 79.
3) Minimum Percent Efficiency: 93% @ 1200 RPM, 93.6% @ 1800 RPM, 91.7% @ 3600 RPM.

l. 40 hp:
1) NEMA Frame: 364T.
2) Minimum Percent Power Factor: 78.
3) Minimum Percent Efficiency: 94.1% @ 1200 RPM, 94.1% @ 1800 RPM, 92.4% @ 3600 RPM

m. 50 hp:
1) NEMA Frame: 365T.
2) Minimum Percent Power Factor: 81.
3) Minimum Percent Efficiency: 94.1% @ 1200 RPM, 94.5% @ 1800 RPM, 93% @ 3600 RPM

n. Over 50 HP - Refer to National Grid "Motor Up" Energy Efficiency requirements for reimbursement.

END OF SECTION

SECTION 23 05 16

EXPANSION FITTINGS AND LOOPS FOR HVAC PIPING

PART 1 GENERAL

1.01 SECTION INCLUDES

A. Flexible pipe connectors.

B. Expansion joints and compensators.

C. Pipe loops, offsets, and swing joints.

1.02 RELATED REQUIREMENTS

A. Section 23 21 13 - Hydronic Piping.

B. Section 23 23 00 - Refrigerant Piping.

1.03 REFERENCE STANDARDS

A. ASTM A269 - Standard Specification for Seamless and Welded Austenitic Stainless Steel Tubing for General Service.

B. EJMA (STDS) - EJMA Standards; Expansion Joint Manufacturers Association.

1.04 SUBMITTALS

A. Product Data:
   1. Flexible Pipe Connectors: Indicate maximum temperature and pressure rating, face-to-face length, live length, hose wall thickness, hose convolutions per foot and per assembly, fundamental frequency of assembly, braid structure, and total number of wires in braid.
   2. Expansion Joints: Indicate maximum temperature and pressure rating, and maximum expansion compensation.

B. Design Data: Indicate selection calculations.

C. Manufacturer's Instructions: Indicate manufacturer's installation instructions, special procedures, and external controls.

D. Project Record Documents: Record installed locations of flexible pipe connectors, expansion joints, anchors, and guides.

E. Maintenance Data: Include adjustment instructions.

1.05 REGULATORY REQUIREMENTS

A. Conform to UL requirements.

1.06 EXTRA MATERIALS

A. Supply two sets of packing for each packed expansion joint.

PART 2 PRODUCTS

2.01 FLEXIBLE PIPE CONNECTORS - STEEL PIPING

A. Manufacturers:
   1. Mercer Rubber Company: www.mercer-rubber.com.

2. Metraflex Company: www.metraflex.com.

B. Inner Hose: Carbon Steel.

C. Exterior Sleeve: Single braided, stainless steel or bronze.

D. Pressure Rating: 125 psi and 450 degrees F.

E. Joint: As specified for pipe joints.

F. Size: Use pipe sized units.

G. Maximum offset: 3/4 inch on each side of installed center line.

2.02 FLEXIBLE PIPE CONNECTORS - COPPER PIPING

A. Manufacturer:
1. Mercer Rubber Company: www.mercer-rubber.com.
2. Metraflex Company: www.metraflex.com.

B. Inner Hose: Bronze.

C. Exterior Sleeve: Braided bronze.

D. Pressure Rating: 125 psi and 450 degrees F.

E. Joint: As specified for pipe joints.

F. Size: Use pipe sized units.

G. Maximum offset: 3/4 inch on each side of installed center line.

H. Application: Copper piping.

2.03 EXPANSION JOINTS - STAINLESS STEEL BELLOWS TYPE

A. Manufacturers:
1. Mercer Rubber Company: www.mercer-rubber.com.
2. Metraflex Company: www.metraflex.com.

B. Pressure Rating: 125 psi and 400 degrees F.

C. Maximum Compression: 1-3/4 inches.

D. Maximum Extension: 1/4 inch.

E. Joint: As specified for pipe joints.

F. Size: Use pipe sized units.

G. Application: Steel piping 3 inches and under.

2.04 EXPANSION JOINTS - EXTERNAL RING CONTROLLED STAINLESS STEEL BELLOWS TYPE

A. Manufacturers:
1. Mercer Rubber Company: www.mercer-rubber.com.
2. Metraflex Company: www.metraflex.com.

B. Pressure Rating: 125 psi and 400 degrees F.

C. Maximum Compression: 15/16 inch.

D. Maximum Extension: 5/16 inch.

E. Maximum Offset: 1/8 inch.

F. Joint: Flanged.

G. Size: Use pipe sized units.

H. Accessories: Internal flow liner.

I. Application: Steel piping over 2 inches.

2.05 EXPANSION JOINTS - SINGLE SPHERE, ELBOW OR FLEXIBLE COMPENSATOR

A. Manufacturers:
   1. Mercer Rubber Company: www.mercer-rubber.com.
   2. Metraflex Company: www.metraflex.com.

B. Body: Teflon.

C. Pressure Rating, Sizes 3/4 Inch to 2 Inch: 150 psi and 210 degrees F.

D. Pressure Rating, Sizes 1-1/2 Inch to 12 Inch: 150 psi and 250 degrees F.

E. Pressure Rating, Sizes 14 Inch to 24 Inch: 105 psi and 250 degrees F.

F. Maximum Compression: 3/4 inch.

G. Maximum Elongation: 1/2 inch.

H. Maximum Offset: 1/2 inch.

I. Maximum Angular Movement: 15 degrees.

J. Joint: Tapped steel flanges.

K. Size: Use pipe sized units.

L. Accessories: Control rods.

M. Application: Steel piping 2 inches and over.

2.06 EXPANSION JOINTS - TWO-PLY BRONZE BELLOWS TYPE

A. Manufacturers:
   1. Mercer Rubber Company: www.mercer-rubber.com.
   2. Metraflex Company: www.metraflex.com.

B. Construction: Bronze with anti-torque device, limit stops, internal guides.

C. Pressure Rating: 125 psi and 400 degrees F.

D. Maximum Compression: 1-3/4 inches.

E. Maximum Extension: 1/4 inch.

F. Joint: As specified for pipe joints.

G. Size: Use pipe sized units.

H. Application: Copper piping.

2.07 EXPANSION JOINTS - LOW PRESSURE COMPENSATOR WITH TWO-PLY BRONZE BELLOWS

A. Manufacturers:
   1. Mercer Rubber Company: www.mercer-rubber.com.
   2. Metraflex Company: www.metraflex.com.

B. Working Pressure: 75 psi.

C. Maximum Temperatures: 250 degrees F.

D. Maximum Compression: 1/2 inch.

E. Maximum Extension: 5/32 inch.

F. Joint: Soldered.

G. Size: Use pipe sized units.

H. Application: Copper or steel piping 3 inches and under.

2.08 EXPANSION JOINTS - STEEL WITH PACKED SLIDING SLEEVE

A. Working Pressure and Temperature: Class 150.

B. Joint: As specified for pipe joints.

C. Size: Use pipe sized units.

D. Application: Steel piping 2 inches and over.

2.09 EXPANSION JOINTS - COPPER WITH PACKED SLIDING SLEEVE

A. Working Pressure: 125 psi.

B. Maximum Temperature: 250 degrees F.

C. Joint: As specified for pipe joints.

D. Size: Use pipe sized units.

E. Application: Copper or steel piping 2 inches and over.

2.10 ACCESSORIES

A. Stainless Steel Pipe: ASTM A269.

B. Pipe Alignment Guides:
   1. Two piece welded steel with enamel paint, bolted, with spider to fit standard pipe, frame with four mounting holes, clearance for minimum 1 inch thick insulation, minimum 3 inches travel.

C. Swivel Joints:
   1. Fabricated steel body, double ball bearing race, field lubricated, with rubber (Buna-N) o-ring seals.

PART 3 EXECUTION

3.01 INSTALLATION

A. Install in accordance with manufacturer's instructions.

B. Install in accordance with EJMA (Expansion Joint Manufacturers Association) Standards.

C. Install flexible pipe connectors on pipes connected to vibration isolated equipment. Provide line size flexible connectors.

D. Install flexible connectors at right angles to displacement. Install one end immediately adjacent to isolated equipment and anchor other end. Install in horizontal plane unless indicated otherwise.

E. Anchor pipe to building structure where indicated. Provide pipe guides so movement is directed along axis of pipe only. Erect piping such that strain and weight is not on cast connections or apparatus.

F. Provide support and equipment required to control expansion and contraction of piping. Provide loops, pipe offsets, and swing joints, or expansion joints where required.

G. Substitute grooved piping for vibration isolated equipment instead of flexible connectors. Grooved piping need not be anchored.

END OF SECTION

SECTION 23 05 19

METERS AND GAGES FOR HVAC PIPING

PART 1 GENERAL

1.01 SECTION INCLUDES

A. Positive displacement meters.

B. Flow meters.

C. Pressure gages and pressure gage taps.

D. Thermometers and thermometer wells.

E. Static pressure gages.

F. Filter gages.

1.02 RELATED REQUIREMENTS

A. Section 23 21 13 - Hydronic Piping.

B. Section 23 09 23 - Direct-Digital Control System for HVAC.

C. Section 23 09 93 - Sequence of Operations for HVAC Controls.

1.03 REFERENCE STANDARDS

A. ASME B40.100 - Pressure Gauges and Gauge Attachments; The American Society of Mechanical Engineers.

B. ASME MFC-3M - Measurement of Fluid Flow in Pipes Using Orifice, Nozzle and Venturi; The American Society of Mechanical Engineers.

C. ASTM E1 - Standard Specification for ASTM Thermometers.

D. ASTM E77 - Standard Test Method for Inspection and Verification of Thermometers.

E. AWWA C700 - Cold Water Meters -- Displacement Type, Bronze Main Case; American Water Works Association (ANSI/AWWA C700).

F. AWWA C701 - Cold Water Meters -- Turbine Type, for Customer Service; American Water Works Association.

G. AWWA C702 - Cold Water Meters -- Compound Type; American Water Works Association.

H. AWWA C706 - Direct-Reading, Remote-Registration Systems for Cold Water Meters; American Water Works Association (ANSI/AWWA C706).

I. AWWA M6 - Water Meters -- Selection, Installation, Testing, and Maintenance; American Water Works Association.

J. UL 393 - Indicating Pressure Gauges for Fire-Protection Service; Underwriters Laboratories Inc..

K. UL 404 - Gages, Indicating Pressure, for Compressed Gas Service; Underwriters Laboratories Inc..

1.04 SUBMITTALS

A. Product Data: Provide list that indicates use, operating range, total range and location for manufactured components.

B. Project Record Documents: Record actual locations of components and instrumentation.

C. Operation and Maintenance Data: Manufacturer's Standards and Operations and maintenance manuals and catalog cuts.

1.05 FIELD CONDITIONS

A. Do not install instrumentation when areas are under construction, except for required rough-in, taps, supports and test plugs.

1.06 EXTRA MATERIALS

A. Supply two bottles of red gage oil for static pressure gages.

B. Supply two pressure gages with pulsation damper or dial thermometers.

PART 2 PRODUCTS

2.01 POSITIVE DISPLACEMENT METERS (LIQUID)

A. Manufacturers:
   1. Dwyer Instruments, Inc: www.dwyer-inst.com.
   2. Venture Measurement Company: www.venturemeasurement.com.
   3. McCrometer: www.mccrometer.com.
   4. Substitutions: See Section 01 60 00 - Product Requirements.

B. AWWA C700, positive displacement disc type suitable for fluid with bronze case and cast iron frost-proof, breakaway bottom cap, hermetically sealed register, remote reading to AWWA C706.

C. Meter: Brass body turbine meter with magnetic drive register.
   1. Service: Cold water, 122 degrees F.
   2. Service: Hot water, 200 degrees F.
   3. Accuracy: 1-1/2 percent.
   4. Maximum Counter Reading: 10 million gallons.
   5. Size: 1/2 inch.

2.02 PRESSURE GAGES

A. Manufacturers:
   1. Dwyer Instruments, Inc: www.dwyer-inst.com.
   2. Moeller Instrument Co., Inc: www.moellerinstrument.com.
   3. Omega Engineering, Inc: www.omega.com.

B. Pressure Gages: ASME B40.100, UL 393 drawn steel case, phosphor bronze bourdon tube, rotary brass movement, brass socket, with front recalibration adjustment, black scale on white background.
   1. Case: Steel with brass bourdon tube.
   2. Size: 2-1/2 inch diameter.
   3. Mid-Scale Accuracy: One percent.
   4. Scale: Psi.

2.03 PRESSURE GAGE TAPPINGS

A. Gage Cock: Tee or lever handle, brass for maximum 150 psi.

B. Needle Valve: Brass or Stainless Steel, 1/4 inch NPT for minimum 150 psi.

C. Pulsation Damper: Pressure snubber, brass with 1/4 inch connections.

D. Syphon: Steel, Schedule 40 or Brass, 1/4 inch angle or straight pattern.

2.04 STEM TYPE THERMOMETERS

A. Manufacturers:
   1. Dwyer Instruments, Inc: www.dwyer-inst.com.
   2. Omega Engineering, Inc: www.omega.com.
   3. Weksler Glass Thermometer Corp: www.wekslerglass.com.

B. Thermometers - Fixed Mounting: Red- or blue-appearing non-toxic liquid in glass; ASTM E1; lens front tube, cast aluminum case with enamel finish.
   1. Size: 7 inch scale.
   2. Window: Clear glass or Lexan.
   3. Stem: Brass.
   4. Accuracy: 2 percent, per ASTM E77.
   5. Calibration: Degrees F.

C. Thermometers - Adjustable Angle: Red- or blue-appearing non-toxic liquid in glass; ASTM E1; lens front tube, cast aluminum case with enamel finish, cast aluminum adjustable joint with positive locking device; adjustable 360 degrees in horizontal plane, 180 degrees in vertical plane.
   1. Size: 7 inch scale.
   2. Window: Clear glass or Lexan.
   3. Stem: 3/4 inch NPT brass.
   4. Accuracy: 2 percent, per ASTM E77.
   5. Calibration: Degrees F.

2.05 DIAL THERMOMETERS

A. Manufacturers:
   1. Dwyer Instruments, Inc: www.dwyer-inst.com.
   2. Omega Engineering, Inc: www.omega.com.
   3. Weksler Glass Thermometer Corp: www.wekslerglass.com.

B. Thermometers - Fixed Mounting: Dial type bimetallic actuated; ASTM E1; stainless steel case, silicone fluid damping, white with black markings and black pointer, hermetically sealed lens, stainless steel stem.
   1. Size: 2-1/2 inch diameter dial.
   2. Lens: Clear glass or Lexan.
   3. Accuracy: 1 percent.
   4. Calibration: Degrees F.

C. Thermometer: ASTM E1, stainless steel case, adjustable angle with front recalibration, bimetallic helix actuated with silicone fluid damping, white with black markings and black pointer hermetically sealed lens, stainless steel stem.
   1. Size: 3 inch diameter dial.
   2. Lens: Clear glass or Lexan.
   3. Accuracy: 1 percent.
   4. Calibration: Degrees F.

D. Thermometers: Dial type vapor or liquid actuated; ASTM E1; stainless steel case, with brass or copper bulb, copper or bronze braided capillary, white with black markings and black pointer, glass lens.
   1. Size: 2-1/2 inch diameter dial.
   2. Lens: Clear glass or Lexan.

3. Length of Capillary: Minimum 5 feet.
4. Accuracy: 2 percent.
5. Calibration: Degrees F.

2.06 THERMOMETER SUPPORTS

A. Socket: Brass separable sockets for thermometer stems with or without extensions as required, and with cap and chain.

B. Flange: 3 inch outside diameter reversible flange, designed to fasten to sheet metal air ducts, with brass perforated stem.

2.07 TEST PLUGS

A. Test Plug: 1/4 inch or 1/2 inch brass or stainless steel fitting and cap for receiving 1/8 inch outside diameter pressure or temperature probe with Nordel core for temperatures up to 350 degrees F.

B. Test Kit: Carrying case, internally padded and fitted containing one 2-1/2 inch diameter pressure gages, one gage adapters with 1/8 inch probes, two 1 inch dial thermometers.

2.08 STATIC PRESSURE GAGES

A. Manufacturers:
1. Dwyer Instruments, Inc: www.dwyer-inst.com.
2. Omega Engineering, Inc: www.omega.com.
3. Weksler Glass Thermometer Corp: www.wekslerglass.com.

B. 2-1/2 inch diameter dial in metal case, diaphragm actuated, black figures on white background, front recalibration adjustment, 2 percent of full scale accuracy.

C. Inclined manometer, red liquid on white background with black figures, front recalibration adjustment, 3 percent of full scale accuracy.

D. Accessories: Static pressure tips with compression fittings for bulkhead mounting, 1/4 inch diameter tubing.

PART 3 EXECUTION

3.01 INSTALLATION

A. Install in accordance with manufacturer's instructions.

B. Install positive displacement meters with isolating valves on inlet and outlet to AWWA M6. Provide full line size valved bypass with globe valve for liquid service meters.

C. Provide one pressure gage per pump, installing taps before strainers and on suction and discharge of pump. Pipe to gage.

D. Install pressure gages with pulsation dampers. Provide gage cock to isolate each gage. Provide siphon on gages in steam systems. Extend nipples and siphons to allow clearance from insulation.

E. Install thermometers in piping systems in sockets in short couplings. Enlarge pipes smaller than 2-1/2 inch for installation of thermometer sockets. Ensure sockets allow clearance from insulation.

F. Install thermometers in air duct systems on flanges.

G. Install thermometer sockets adjacent to controls systems thermostat, transmitter, or sensor sockets. Refer to Section 23 09 43. Where thermometers are provided on local panels, duct or pipe mounted thermometers are provided on local panels, duct or pipe mounted thermometers are not required.

H. Locate duct mounted thermometers minimum 10 feet downstream of mixing dampers, coils, or other devices causing air turbulence.

I. Coil and conceal excess capillary on remote element instruments.

J. Provide instruments with scale ranges selected according to service with largest appropriate scale.

K. Install gages and thermometers in locations where they are easily read from normal operating level. Install vertical to 45 degrees off vertical.

L. Adjust gages and thermometers to final angle, clean windows and lenses, and calibrate to zero.

M. Locate test plugs adjacent thermometers and thermometer sockets, adjacent to pressure gages and pressure gage taps, adjacent to control device sockets or where indicated.

3.02 SCHEDULE

A. Pressure Gages, Location:
   1. Pumps.
   2. Expansion tanks.
   3. Pressure tanks.
   4. Standpipe, highest points.
   5. Standpipe and sprinkler water supply connection.
   6. Sprinkler system.
   7. Pressure reducing valves.
   8. Backflow preventers.

B. Pressure Gage Tappings, Location:
   1. Control valves 3/4 inch & larger - inlets and outlets.
   2. Major coils - inlets and outlets.
   3. Heat exchangers - inlets and outlets.
   4. Chiller - inlets and outlets.
   5. Boiler - inlets and outlets.

C. Stem Type Thermometers, Location and Scale Range:
   1. Headers to central equipment.
   2. Coil banks - inlets and outlets.
   3. Heat exchangers - inlets and outlets.
   4. Boilers - inlets and outlets.
   5. Chiller - inlets and outlets.
   6. Water zone supply and return.
   7. After major coils.
   8. Domestic hot water supply and recirculation.

D. Thermometer Sockets, Location:
   1. Control valves 1 inch & larger - inlets and outlets.
   2. Reheat coils - inlets and outlets.
   3. Cabinet heaters - inlets and outlets.
   4. Unit heaters - inlets and outlets.

E. Dial Thermometers, Location and Scale Range:
   1. ERV Outside air.
   2. ERV Return air.
   3. ERV Exhaust air.
   4. ERV Supply air.

F. Static Pressure and Filter Gages, Location and Scale Range:
   1. Built up filter banks.
   2. Unitary filter sections.
   3. Supply fan discharge.
   4. Building static.

END OF SECTION

SECTION 23 05 48

VIBRATION AND SEISMIC CONTOLS FOR HVAC

PART 1 GENERAL

1.01 SECTION INCLUDES

A. Equipment support bases.

B. Vibration isolators.

C. Inertia bases.

D. Vibration isolators.

E. Seismic restraints.

1.02 RELATED REQUIREMENTS

A. Section 03 30 00 - Cast-in-Place Concrete.

1.03 SUBMITTALS

A. Product Data: Provide schedule of vibration isolator type with location and load on each.

B. Shop Drawings: Indicate inertia bases and locate vibration isolators, with static and dynamic load on each. Indicate seismic control measures.

C. Manufacturer's Instructions: Indicate installation instructions with special procedures and setting dimensions.

PART 2 PRODUCTS

2.01 MANUFACTURERS

A. Isolation Technology, Inc: www.isolationtech.com.

B. Kinetics Noise Control, Inc: www.kineticsnoise.com.

C. Mason Industries: www.mason-ind.com.

2.02 PERFORMANCE REQUIREMENTS

A. General:
   1. All vibration isolators, base frames and inertia bases to conform to all uniform deflection and stability requirements under all operating loads.
   2. Steel springs to function without undue stress or overloading.

2.03 EQUIPMENT SUPPORT BASES

2.04 VIBRATION ISOLATORS

2.05 INERTIA BASES

A. Concrete Inertia Bases:
   1. Construction: Structural steel channel perimeter frame, with gusseted brackets and anchor bolts, reinforcing; concrete filled.
   2. Mass: Minimum of 1.5 times weight of isolated equipment.
   3. Connecting Point: Reinforced to connect isolators and snubbers to base.
   4. Concrete: Minimum 3000 psi concrete.

2.06 VIBRATION ISOLATORS

A. Open Spring Isolators:
   1. Springs: Minimum horizontal stiffness equal to 75 percent vertical stiffness, with working deflection between 0.3 and 0.6 of maximum deflection. Color code springs for load carrying capacity.
   2. Spring Mounts: Provide with leveling devices, minimum 0.25 inch thick neoprene sound pads, and zinc chromate plated hardware.
   3. Sound Pads: Size for minimum deflection of 0.05 inch; meet requirements for neoprene pad isolators.
   4. For Exterior and Humid Areas: Hot dipped galvanized housings and neoprene coated springs.

B. Restrained Open Spring Isolators:
   1. Springs: Minimum horizontal stiffness equal to 75 percent vertical stiffness, with working deflection between 0.3 and 0.6 of maximum deflection. Color code springs for load carrying capacity.
   2. Spring Mounts: Provide with leveling devices, minimum 0.25 inch thick neoprene sound pads, and zinc chromate plated hardware.
   3. Sound Pads: Size for minimum deflection of 0.05 inch; meet requirements for neoprene pad isolators.
   4. Restraint: Provide heavy mounting frame and limit stops.
   5. For Exterior and Humid Areas: Hot dipped galvanized housings and neoprene coated springs.

C. Closed Spring Isolators:
   1. Type : Closed spring mount with top and bottom housing separated with neoprene rubber stabilizers.
   2. Springs: Minimum horizontal stiffness equal to 75 percent vertical stiffness, with working deflection between 0.3 and 0.6 of maximum deflection. Color code springs for load carrying capacity.
   3. Housings: Incorporate neoprene isolation pad meeting requirements for neoprene pad isolators, and neoprene side stabilizers with minimum 0.25 inch clearance.
   4. For Exterior and Humid Areas: Hot dipped galvanized housings and neoprene coated springs.

D. Restrained Closed Spring Isolators:
   1. Type : Closed spring mount with top and bottom housing separated with neoprene rubber stabilizers.
   2. Springs: Minimum horizontal stiffness equal to 75 percent vertical stiffness, with working deflection between 0.3 and 0.6 of maximum deflection. Color code springs for load carrying capacity.
   3. Housings: Incorporate neoprene isolation pad meeting requirements for neoprene pad isolators, and neoprene side stabilizers with minimum 0.25 inch clearance and limit stops.
   4. For Exterior and Humid Areas: Hot dipped galvanized housings and neoprene coated springs.

E. Spring Hangers:
   1. Springs: Minimum horizontal stiffness equal to 75 percent vertical stiffness, with working deflection between 0.3 and 0.6 of maximum deflection. Color code springs for load carrying capacity.
   2. Housings: Incorporate neoprene isolation pad meeting requirements for neoprene pad isolators.
   3. Misalignment: Capable of 20 degree hanger rod misalignment.

4. For Exterior and Humid Areas: Hot dipped galvanized housings and neoprene coated springs.

F. Neoprene Pad Isolators:
1. Rubber or neoprene waffle pads.
   a. Hardness: 30 durometer.
   b. Thickness: Minimum 1/2 inch.
   c. Maximum Loading: 50 psi.
   d. Rib Height: Maximum 0.7 times width.
2. Configuration: Single layer.
3. Configuration: 1/2 inch thick waffle pads bonded each side of 1/4 inch thick steel plate.

G. Rubber Mount or Hanger: Molded rubber designed for 0.4 inch deflection with threaded insert.

H. Glass Fiber Pads: Neoprene jacketed pre-compressed molded glass fiber.

I. Seismic Snubbers:
1. Type: Non-directional and double acting unit consisting of interlocking steel members restrained by neoprene elements.
2. Elements: Replaceable neoprene, minimum of 0.75 inch thick with minimum 1/8 inch air gap.
3. Capacity: 4 times load assigned to mount groupings at 0.4 inch deflection.
4. Attachment Points and Fasteners: Capable of withstanding 3 times rated load capacity of seismic snubber.

J. Roof Mounting Curb: 14 inches high with rigid steel lower section containing adjustable spring pockets with restrained spring isolators, steel upper section to support rooftop equipment, and continuous elastomeric membrane extending from upper section for counterflashing over roofing. Provide acoustical package consisting of interior perimeter angles and cross members to support up to two layers of gypsum board.

PART 3 EXECUTION

3.01 INSTALLATION - GENERAL

A. Install in accordance with manufacturer's instructions.

B. Bases:
1. Set steel bases for one inch clearance between housekeeping pad and base.
2. Set concrete inertia bases for 2 inches clearance between housekeeping pad and base.
3. Adjust equipment level.

C. On closed spring isolators, adjust so side stabilizers are clear under normal operating conditions.

D. Prior to making piping connections to equipment with operating weights substantially different from installed weights, block up equipment with temporary shims to final height. When full load is applied, adjust isolators to load to allow shim removal.

E. Provide pairs of horizontal limit springs on fans with more than 6.0 inches WC static pressure, and on hanger supported, horizontally mounted axial fans.

F. Provide seismic snubbers for all equipment, piping, and ductwork mounted on isolators. Each inertia base shall have minimum of four seismic snubbers located close to isolators. Snub equipment designated for post-disaster use to 0.05 inch maximum clearance. Other snubbers shall have clearance between 0.15 inch and 0.25 inch.

G. Support piping connections to equipment mounted on isolators using isolators or resilient hangers as follows:
   1. Up to 4 Inches Pipe Size: First three points of support.
   2. 5 to 8 Inches Pipe Size: First four points of support.
   3. 10 inches Pipe Size and Over: First six points of support.
   4. Select three hangers closest to vibration source for minimum 1.0 inch static deflection or static deflection of isolated equipment. Select remaining isolators for minimum 1.0 inch static deflection or 1/2 static deflection of isolated equipment.

3.02 FIELD QUALITY CONTROL

A. Inspect isolated equipment after installation and submit report. Include static deflections.

3.03 SCHEDULE

A. Pipe Isolation Schedule.
   1. 1 Inch Pipe Size: Isolate 120 diameters from equipment.
   2. 2 Inch Pipe Size: Isolate 90 diameters from equipment.
   3. 3 Inch Pipe Size: Isolate 80 diameters from equipment.
   4. 4 Inch Pipe Size: Isolate 75 diameters from equipment.
   5. 6 Inch Pipe Size: Isolate 60 diameters from equipment.
   6. 8 Inch Pipe Size: Isolate 60 diameters from equipment.
   7. 10 Inch Pipe Size: Isolate 54 diameters from equipment.
   8. 12 Inch Pipe Size: Isolate 50 diameters from equipment.
   9. 16 Inch Pipe Size: Isolate 45 diameters from equipment.
   10. 24 Inch Pipe Size: Isolate 38 diameters from equipment.
   11. Over 24 Inch Pipe Size: As indicated.

B. Equipment Isolation Schedule.
   1. Pumps.

END OF SECTION

SECTION 23 05 53

IDENTIFICATION FOR HVAC PIPING AND EQUIPMENT

PART 1 GENERAL

1.01 SECTION INCLUDES

A. Nameplates.

B. Tags.

C. Stencils.

D. Pipe Markers.

1.02 RELATED REQUIREMENTS

A. Section 09 90 00 - Painting and Coating: Identification painting.

1.03 REFERENCE STANDARDS

A. ASME A13.1 - Scheme for the Identification of Piping Systems; The American Society of Mechanical Engineers.

1.04 SUBMITTALS

A. List: Submit list of wording, symbols, letter size, and color coding for mechanical identification.

B. Chart and Schedule: Submit valve chart and schedule, including valve tag number, location, function, and valve manufacturer's name and model number.

C. Product Data: Provide manufacturers catalog literature for each product required.

D. Samples: Submit two labels or tags 1/2 x 4 inch in size.

E. Manufacturer's Installation Instructions: Indicate special procedures, and installation.

F. Project Record Documents: Record actual locations of tagged valves.

PART 2 PRODUCTS

2.01 MANUFACTURERS

A. Brady Corporation: www.bradycorp.com.

B. Champion America, Inc: www.Champion-America.com.

C. Seton Identification Products: www.seton.com/aec.

2.02 NAMEPLATES

A. Description: Laminated three-layer plastic with engraved letters.
   1. Letter Color: White.
   2. Letter Height: 1/2 inch.
   3. Background Color: Black.

2.03 TAGS

A. Plastic Tags: Laminated three-layer plastic with engraved black letters on light contrasting background color. Tag size minimum 1-1/2 inch diameter.

B. Metal Tags: Aluminum with stamped letters; tag size minimum 1-1/2 inch diameter with smooth edges.

C. Valve Tag Chart: Typewritten letter size list in anodized aluminum frame.

2.04 STENCILS

A. Stencils: With clean cut symbols and letters of following size:
   1. 3/4 to 1-1/4 inch Outside Diameter of Insulation or Pipe: 8 inch long color field, 1/2 inch high letters.
   2. 1-1/2 to 2 inch Outside Diameter of Insulation or Pipe: 8 inch long color field, 3/4 inch high letters.
   3. 2-1/2 to 6 inch Outside Diameter of Insulation or Pipe: 12 inch long color field, 1-1/4 inch high letters.
   4. 8 to 10 inch Outside Diameter of Insulation or Pipe: 24 inch long color field, 2-1/2 inch high letters.
   5. Over 10 inch Outside Diameter of Insulation or Pipe: 32 inch long color field, 3-1/2 inch high letters.
   6. Ductwork and Equipment: 2-1/2 inch high letters.

B. Stencil Paint: As specified in Section 09 90 00, semi-gloss enamel, colors conforming to ASME A13.1.

2.05 PIPE MARKERS

A. Color: Conform to ASME A13.1.

B. Plastic Pipe Markers: Factory fabricated, flexible, semi- rigid plastic, preformed to fit around pipe or pipe covering; minimum information indicating flow direction arrow and identification of fluid being conveyed.

C. Plastic Tape Pipe Markers: Flexible, vinyl film tape with pressure sensitive adhesive backing and printed markings.

D. Underground Plastic Pipe Markers: Bright colored continuously printed plastic ribbon tape, minimum 6 inches wide by 4 mil thick, manufactured for direct burial service.

2.06 CEILING TACKS

A. Description: Steel with 3/4 inch diameter color coded head.

B. Color code as follows:
   1. HVAC Equipment: Yellow.
   2. Fire Dampers and Smoke Dampers: Red.
   3. Heating/Cooling Valves: Blue.

PART 3 EXECUTION

3.01 PREPARATION

A. Degrease and clean surfaces to receive adhesive for identification materials.

B. Prepare surfaces in accordance with Section 09 90 00 for stencil painting.

3.02 INSTALLATION

A. Install nameplates with corrosive-resistant mechanical fasteners, or adhesive. Apply with sufficient adhesive to ensure permanent adhesion and seal with clear lacquer.

B. Install tags with corrosion resistant chain.

C. Apply stencil painting in accordance with Section 09 90 00.

D. Install plastic pipe markers in accordance with manufacturer's instructions.

E. Install plastic tape pipe markers complete around pipe in accordance with manufacturer's instructions.

F. Install underground plastic pipe markers 6 to 8 inches below finished grade, directly above buried pipe.

G. Identify air handling units, pumps, heat transfer equipment, tanks, and water treatment devices with plastic nameplates. Small devices, such as in-line pumps, may be identified with tags.

H. Identify control panels and major control components outside panels with plastic nameplates.

I. Identify thermostats relating to terminal boxes or valves with nameplates.

J. Identify valves in main and branch piping with tags.

K. Identify air terminal units and radiator valves with numbered tags.

L. Tag automatic controls, instruments, and relays. Key to control schematic.

M. Identify piping, concealed or exposed, with plastic pipe markers, plastic tape pipe markers or stencilled painting. Use tags on piping 3/4 inch diameter and smaller. Identify service, flow direction, and pressure. Install in clear view and align with axis of piping. Locate identification not to exceed 20 feet on straight runs including risers and drops, adjacent to each valve and Tee, at each side of penetration of structure or enclosure, and at each obstruction.

N. Identify ductwork with plastic nameplates or stencilled painting. Identify with air handling unit identification number and area served. Locate identification at air handling unit, at each side of penetration of structure or enclosure, and at each obstruction.

O. Locate ceiling tacks to locate valves, units, or dampers above lay-in panel ceilings. Locate in corner of panel closest to equipment.

END OF SECTION

SECTION 23 05 93

TESTING, ADJUSTING, AND BALANCING FOR HVAC

PART 1 GENERAL

1.01 SECTION INCLUDES

A. Testing, adjustment, and balancing of air systems.

B. Testing, adjustment, and balancing of hydronic and refrigerating systems.

C. Measurement of final operating condition of HVAC systems.

D. Sound measurement of equipment operating conditions.

E. Vibration measurement of equipment operating conditions.

F. Commissioning activities.

1.02 RELATED REQUIREMENTS

A. Section 23 08 00 - Commissioning of HVAC.

1.03 REFERENCE STANDARDS

A. AABC MN-1 - AABC National Standards for Total System Balance; Associated Air Balance Council.

B. ASHRAE Std 111 - Practices for Measurement, Testing, Adjusting and Balancing of Building Heating, Ventilation, Air-Conditioning, and Refrigeration Systems; American Society of Heating, Refrigerating and Air-Conditioning Engineers, Inc..

C. NEBB (TAB) - Procedural Standards for Testing Adjusting Balancing of Environmental Systems; National Environmental Balancing Bureau.

D. SMACNA (TAB) - HVAC Systems Testing, Adjusting, and Balancing; Sheet Metal and Air Conditioning Contractors' National Association.

1.04 SUBMITTALS

A. Qualifications: Submit name of adjusting and balancing agency and TAB supervisor for approval within 30 days after award of Contract.

B. TAB Plan: Submit a written plan indicating the testing, adjusting, and balancing standard to be followed and the specific approach for each system and component.
   1. Submit to Architect.
   2. Submit to the Commissioning Authority, Construction Manager, and HVAC controls contractor.
   3. Submit six weeks prior to starting the testing, adjusting, and balancing work.
   4. Include certification that the plan developer has reviewed the contract documents, the equipment and systems, and the control system with the Architect and other installers to sufficiently understand the design intent for each system.
   5. Include at least the following in the plan:
      a. Preface: An explanation of the intended use of the control system.
      b. List of all air flow, water flow, sound level, system capacity and efficiency measurements to be performed and a description of specific test procedures, parameters, formulas to be used.

c. Copy of field checkout sheets and logs to be used, listing each piece of equipment to be tested, adjusted and balanced with the data cells to be gathered for each.
d. Identification and types of measurement instruments to be used and their most recent calibration date.
e. Discussion of what notations and markings will be made on the duct and piping drawings during the process.
f. Final test report forms to be used.
g. Detailed step-by-step procedures for TAB work for each system and issue, including:
    1) Terminal flow calibration (for each terminal type).
    2) Diffuser proportioning.
    3) Branch/submain proportioning.
    4) Total flow calculations.
    5) Rechecking.
    6) Diversity issues.
h. Expected problems and solutions, etc.
i. Criteria for using air flow straighteners or relocating flow stations and sensors.
j. Details of how TOTAL flow will be determined; for example:
    1) Air: Sum of terminal flows via control system calibrated readings or via hood readings of all terminals, supply (SA) and return air (RA) pitot traverse, SA or RA flow stations.
    2) Water: Pump curves, circuit setter, flow station, ultrasonic, etc.
k. Specific procedures that will ensure that both air and water side are operating at the lowest possible pressures and methods to verify this.
l. Confirmation of understanding of the outside air ventilation criteria under all conditions.
m. Method of verifying and setting minimum outside air flow rate will be verified and set and for what level (total building, zone, etc.).
n. Method of checking building static and exhaust fan and/or relief damper capacity.
o. Proposed selection points for sound measurements and sound measurement methods.
p. Methods for making coil or other system plant capacity measurements, if specified.
q. Time schedule for TAB work to be done in phases (by floor, etc.).
r. Description of TAB work for areas to be built out later, if any.
s. Time schedule for deferred or seasonal TAB work, if specified.
t. False loading of systems to complete TAB work, if specified.
u. Exhaust fan balancing and capacity verifications, including any required room pressure differentials.
v. Interstitial cavity differential pressure measurements and calculations, if specified.
w. Procedures for field technician logs of discrepancies, deficient or uncompleted work by others, contract interpretation requests and lists of completed tests (scope and frequency).
x. Procedures for formal progress reports, including scope and frequency.
y. Procedures for formal deficiency reports, including scope, frequency and distribution.

C. Field Logs: Submit at least once a week to Commissioning Authority and Construction Manager.

D. Control System Coordination Reports: Communicate in writing to the controls installer all setpoint and parameter changes made or problems and discrepancies identified during TAB that affect, or could affect, the control system setup and operation.

E. Progress Reports.

F. Final Report: Indicate deficiencies in systems that would prevent proper testing, adjusting, and balancing of systems and equipment to achieve specified performance.
   1. Submit to the Commissioning Authority, Construction Manager, and HVAC controls contractor within two weeks after completion of testing, adjusting, and balancing.
   2. Revise TAB plan to reflect actual procedures and submit as part of final report.
   3. Submit draft copies of report for review prior to final acceptance of Project. Provide final copies for Architect and for inclusion in operating and maintenance manuals.
   4. Provide reports in soft cover, letter size, 3-ring binder manuals, complete with index page and indexing tabs, with cover identification at front and side. Include set of reduced drawings with air outlets and equipment identified to correspond with data sheets, and indicating thermostat locations.
   5. Include actual instrument list, with manufacturer name, serial number, and date of calibration.
   6. Form of Test Reports: Where the TAB standard being followed recommends a report format use that; otherwise, follow ASHRAE Std 111.
   7. Units of Measure: Report data in I-P (inch-pound) units only.
   8. Include the following on the title page of each report:
      a. Name of Testing, Adjusting, and Balancing Agency.
      b. Address of Testing, Adjusting, and Balancing Agency.
      c. Telephone number of Testing, Adjusting, and Balancing Agency.
      d. Project name.
      e. Project location.
      f. Project Architect.
      g. Project Engineer.
      h. Project Contractor.
      i. Project altitude.
      j. Report date.

G. Project Record Documents: Record actual locations of flow measuring stations and balancing valves and rough setting.

1.05 QUALITY ASSURANCE (moved to PART 3)

1.06 PRE-BALANCING MEETING (moved to PART 3)

1.07 SEQUENCING AND SCHEDULING (moved to PART 3)

1.08 WARRANTY (moved to PART 3)

PART 2 PRODUCTS - NOT USED

PART 3 EXECUTION

3.01 GENERAL REQUIREMENTS

A. Perform total system balance in accordance with one of the following:
   1. AABC MN-1, AABC National Standards for Total System Balance.
   2. ASHRAE Std 111, Practices for Measurement, Testing, Adjusting and Balancing of Building Heating, Ventilation, Air-Conditioning, and Refrigeration Systems.
   3. NEBB Procedural Standards for Testing Adjusting Balancing of Environmental Systems.
   4. SMACNA HVAC Systems Testing, Adjusting, and Balancing.
   5. Maintain at least one copy of the standard to be used at project site at all times.

B. Begin work after completion of systems to be tested, adjusted, or balanced and complete work prior to Substantial Completion of the project.

C. Where HVAC systems and/or components interface with life safety systems, including fire and smoke detection, alarm, and control, coordinate scheduling and testing and inspection procedures with the authorities having jurisdiction.

D. TAB Agency Qualifications:
   1. Company specializing in the testing, adjusting, and balancing of systems specified in this section.
   2. Having minimum of three years documented experience.
   3. Certified by one of the following:
      a. AABC, Associated Air Balance Council: www.aabchq.com; upon completion submit AABC National Performance Guaranty.
      b. NEBB, National Environmental Balancing Bureau: www.nebb.org.
      c. TABB, The Testing, Adjusting, and Balancing Bureau of National Energy Management Institute: www.tabbcertified.org.

E. TAB Supervisor and Technician Qualifications: Certified by same organization as TAB agency.

F. TAB Supervisor Qualifications: Professional Engineer licensed in DE.

3.02 EXAMINATION

A. Verify that systems are complete and operable before commencing work. Ensure the following conditions:
   1. Systems are started and operating in a safe and normal condition.
   2. Temperature control systems are installed complete and operable.
   3. Proper thermal overload protection is in place for electrical equipment.
   4. Final filters are clean and in place. If required, install temporary media in addition to final filters.
   5. Duct systems are clean of debris.
   6. Fans are rotating correctly.
   7. Fire and volume dampers are in place and open.
   8. Air coil fins are cleaned and combed.
   9. Access doors are closed and duct end caps are in place.
   10. Air outlets are installed and connected.
   11. Duct system leakage is minimized.
   12. Hydronic systems are flushed, filled, and vented.
   13. Pumps are rotating correctly.
   14. Proper strainer baskets are clean and in place.
   15. Service and balance valves are open.

B. Submit field reports. Report defects and deficiencies that will or could prevent proper system balance.

C. Beginning of work means acceptance of existing conditions.

3.03 PREPARATION

A. Hold a pre-balancing meeting at least one week prior to starting TAB work.
   1. Require attendance by all installers whose work will be tested, adjusted, or balanced.

B. Provide instruments required for testing, adjusting, and balancing operations. Make instruments available to Architect to facilitate spot checks during testing.

C. Provide additional balancing devices as required.

3.04 ADJUSTMENT TOLERANCES

A. Air Handling Systems: Adjust to within plus or minus 10 percent of design for supply systems and plus or minus 10 percent of design for return and exhaust systems.

B. Air Outlets and Inlets: Adjust total to within plus 10 percent and minus 10 percent of design to space. Adjust outlets and inlets in space to within plus or minus 10 percent of design.

C. Hydronic Systems: Adjust to within plus or minus 10 percent of design.

3.05 RECORDING AND ADJUSTING

A. Field Logs: Maintain written logs including:
   1. Running log of events and issues.
   2. Discrepancies, deficient or uncompleted work by others.
   3. Contract interpretation requests.
   4. Lists of completed tests.

B. Ensure recorded data represents actual measured or observed conditions.

C. Permanently mark settings of valves, dampers, and other adjustment devices allowing settings to be restored. Set and lock memory stops.

D. Mark on the drawings the locations where traverse and other critical measurements were taken and cross reference the location in the final report.

E. After adjustment, take measurements to verify balance has not been disrupted or that such disruption has been rectified.

F. Leave systems in proper working order, replacing belt guards, closing access doors, closing doors to electrical switch boxes, and restoring thermostats to specified settings.

G. At final inspection, recheck random selections of data recorded in report. Recheck points or areas as selected and witnessed by the Red Clay Consolidated School District.

H. Check and adjust systems approximately six months after final acceptance and submit report.

3.06 AIR SYSTEM PROCEDURE

A. Adjust air handling and distribution systems to provide required or design supply, return, and exhaust air quantities.

B. Make air quantity measurements in ducts by Pitot tube traverse of entire cross sectional area of duct.

C. Measure air quantities at air inlets and outlets.

D. Adjust distribution system to obtain uniform space temperatures free from objectionable drafts and noise.

E. Use volume control devices to regulate air quantities only to extend that adjustments do not create objectionable air motion or sound levels. Effect volume control by duct internal devices such as dampers and splitters.

F. Vary total system air quantities by adjustment of fan speeds. Provide drive and sheave changes required. Vary branch air quantities by damper regulation.

G. Provide system schematic with required and actual air quantities recorded at each outlet or inlet.

H. Measure static air pressure conditions on air supply units, including filter and coil pressure drops, and total pressure across the fan. Make allowances for 50 percent loading of filters.

I. Adjust outside air automatic dampers, outside air, return air, and exhaust dampers for design conditions.

J. Measure temperature conditions across outside air, return air, and exhaust dampers to check leakage.

K. Where modulating dampers are provided, take measurements and balance at extreme conditions. Balance variable volume systems at maximum air flow rate, full cooling, and at minimum air flow rate, full heating.

L. Measure building static pressure and adjust supply, return, and exhaust air systems to provide required relationship between each to maintain approximately 0.05 inches positive static pressure near the building entries.

M. Check multi-zone units for motorized damper leakage. Adjust air quantities with mixing dampers set first for cooling, then heating, then modulating.

N. For variable air volume system powered units set volume controller to air flow setting indicated. Confirm connections properly made and confirm proper operation for automatic variable air volume temperature control.

O. On fan powered VAV boxes, adjust air flow switches for proper operation.

P. For laboratories, lab classrooms, and prep rooms, offset CFM values (differential between exhaust/return and supply airflows) shall be required to maintain a plus 10% minus 5% offset.

3.07 WATER SYSTEM PROCEDURE

A. Adjust water systems to provide required or design quantities.

B. Use calibrated Venturi tubes, orifices, or other metered fittings and pressure gauges to determine flow rates for system balance. Where flow metering devices are not installed, base flow balance on temperature difference across various heat transfer elements in the system.

C. Adjust systems to provide specified pressure drops and flows through heat transfer elements prior to thermal testing. Perform balancing by measurement of temperature differential in conjunction with air balancing.

D. Effect system balance with automatic control valves fully open to heat transfer elements.

E. Effect adjustment of water distribution systems by means of balancing cocks, valves, and fittings. Do not use service or shut-off valves for balancing unless indexed for balance point.

F. Where available pump capacity is less than total flow requirements or individual system parts, full flow in one part may be simulated by temporary restriction of flow to other parts.

3.08 COMMISSIONING

A. Perform prerequisites prior to starting commissioning activities.

B. Fill out Prefunctional Checklists for:
   1. Air side systems.
   2. Water side systems.

C. Furnish to the Commissioning Authority, upon request, any data gathered but not shown in the final TAB report.

D. Re-check minimum outdoor air intake flows and maximum and intermediate total airflow rates for 10 percent of the air handlers plus a random sample equivalent to 5 percent of the final TAB report data as directed by Commissioning Authority.
   1. Original TAB agency shall execute the re-checks, witnessed by the Commissioning Authority.
   2. Use the same test instruments as used in the original TAB work.
   3. Failure of more than 10 percent of the re-checked items of a given system shall result in the rejection of the system TAB report; rebalance the system, provide a new system TAB report, and repeat random re-checks.
   4. For purposes of re-check, failure is defined as follows:
      a. Air Flow of Supply and Return: Deviation of more than 10 percent of instrument reading.
      b. Minimum Outside Air Flow: Deviation of more than 20 percent of instrument reading; for inlet vane or VFD OSA compensation system using linear proportional control, deviation of more than 30 percent at intermediate supply flow.
      c. Temperatures: Deviation of more than one degree F.
      d. Air and Water Pressures: Deviation of more than 10 percent of full scale of test instrument reading.
      e. Sound Pressures: Deviation of more than 3 decibels, with consideration for variations in background noise.
   5. For purposes of re-check, a whole system is defined as one in which inaccuracies will have little or no impact on connected systems; for example, the air distribution system served by one air handler or the hydronic chilled water supply system served by a chiller or the condenser water system.

E. In the presence of the Commissioning Authority, verify that:
   1. Final settings of all valves, splitters, dampers and other adjustment devices have been permanently marked.
   2. The air system is being controlled to the lowest possible static pressure while still meeting design loads, less diversity; this shall include a review of TAB methods, established control setpoints, and physical verification of at least one leg from fan to diffuser having all balancing dampers wide open and that during full cooling of all terminal units taking off downstream of the static pressure sensor, the terminal unit on the critical leg has its damper 90 percent or more open.
   3. The water system is being controlled to the lowest possible pressure while still meeting design loads, less diversity; this shall include a review of TAB methods, established control setpoints, and physical verification of at least one leg from the pump to the coil having all balancing valves wide open and that during full cooling the cooling coil valve of that leg is 90 percent or more open.

F. No seasonal tests are required.

G. No further monitoring is required.

H. No deferred testing is required.

3.09 SCOPE

A. Test, adjust, and balance the following:
   1. Electric Water Coolers
   2. Plumbing Pumps
   3. HVAC Pumps/Hydronic Systems
   4. Packaged Boilers
   5. Combined Heating, Cooling, and Power hydronic systems
   6. Absorption Chillers

7. Cooling towers
8. Air Cooled Refrigerant Condensers
9. Terminal Heat Transfer Units
10. Heat Exchangers
11. Laboratory fume hoods
12. Air Handling Units/Rooftop Mounted Air handling units
13. Fans
14. Air Filters
15. Air Terminal Units/Chilled Beams (air and hydronic)
16. Air Inlets and Outlets

3.10 MINIMUM DATA TO BE REPORTED

A. Electric Motors:
1. Manufacturer
2. Model/Frame
3. HP/BHP
4. Phase, voltage, amperage; nameplate, actual, no load
5. RPM
6. Service factor
7. Starter size, rating, heater elements
8. Sheave Make/Size/Bore

B. V-Belt Drives:
1. Identification/location
2. Required driven RPM
3. Driven sheave, diameter and RPM
4. Belt, size and quantity
5. Motor sheave diameter and RPM
6. Center to center distance, maximum, minimum, and actual

C. Pumps:
1. Identification/number
2. Manufacturer
3. Size/model
4. Impeller
5. Service
6. Design flow rate, pressure drop, BHP
7. Actual flow rate, pressure drop, BHP
8. Discharge pressure
9. Suction pressure
10. Total operating head pressure
11. Shut off, discharge and suction pressures
12. Shut off, total head pressure

D. Hydronic System Control
1. Differential pressure setpoints for BAS contractor / commissioning.

E. Combustion Equipment:
1. Boiler manufacturer
2. Model number
3. Serial number
4. Firing rate
5. Overfire draft
6. Gas meter timing dial size

7. Gas meter time per revolution
8. Gas pressure at meter outlet
9. Gas flow rate
10. Heat input
11. Burner manifold gas pressure
12. Percent carbon monoxide (CO)
13. Percent carbon dioxide (CO2)
14. Percent oxygen (O2)
15. Percent excess air
16. Flue gas temperature at outlet
17. Ambient temperature
18. Net stack temperature
19. Percent stack loss
20. Percent combustion efficiency
21. Heat output

F. Air Cooled Condensers:
1. Identification/number
2. Location
3. Manufacturer
4. Model number
5. Serial number
6. Entering DB air temperature, design and actual
7. Leaving DB air temperature, design and actual
8. Number of compressors

G. Chillers:
1. Identification/number
2. Manufacturer
3. Capacity
4. Model number
5. Serial number
6. Evaporator entering water temperature, design and actual
7. Evaporator leaving water temperature, design and actual
8. Evaporator pressure drop, design and actual
9. Evaporator water flow rate, design and actual
10. Condenser entering water temperature, design and actual
11. Condenser pressure drop, design and actual
12. Condenser water flow rate, design and actual

H. Cooling Tower:
1. Tower identification/number
2. Manufacturer
3. Model number
4. Serial number
5. Rated capacity
6. Entering air WB temperature, specified and actual
7. Leaving air WB temperature, specified and actual
8. Ambient air DB temperature
9. Condenser water entering temperature
10. Condenser water leaving temperature
11. Condenser water flow rate
12. Fan RPM

I. Heat Exchangers:

1. Identification/number
2. Location
3. Service
4. Manufacturer
5. Model number
6. Serial number
7. Steam pressure, design and actual
8. Primary water entering temperature, design and actual
9. Primary water leaving temperature, design and actual
10. Primary water flow, design and actual
11. Primary water pressure drop, design and actual
12. Secondary water leaving temperature, design and actual
13. Secondary water leaving temperature, design and actual
14. Secondary water flow, design and actual
15. Secondary water pressure drop, design and actual

J. Cooling Coils:
1. Identification/number
2. Location
3. Service
4. Manufacturer
5. Air flow, design and actual
6. Entering air DB temperature, design and actual
7. Entering air WB temperature, design and actual
8. Leaving air DB temperature, design and actual
9. Leaving air WB temperature, design and actual
10. Water flow, design and actual
11. Water pressure drop, design and actual
12. Entering water temperature, design and actual
13. Leaving water temperature, design and actual
14. Saturated suction temperature, design and actual
15. Air pressure drop, design and actual

K. Heating Coils:
1. Identification/number
2. Location
3. Service
4. Manufacturer
5. Air flow, design and actual
6. Water flow, design and actual
7. Water pressure drop, design and actual
8. Entering water temperature, design and actual
9. Leaving water temperature, design and actual
10. Entering air temperature, design and actual
11. Leaving air temperature, design and actual
12. Air pressure drop, design and actual

L. Air Moving Equipment:
1. Location
2. Manufacturer
3. Model number
4. Serial number
5. Arrangement/Class/Discharge
6. Air flow, specified and actual

7. Return air flow, specified and actual
8. Outside air flow, specified and actual
9. Total static pressure (total external), specified and actual
10. Inlet pressure
11. Discharge pressure
12. Sheave Make/Size/Bore
13. Number of Belts/Make/Size
14. Fan RPM

M. Return Air/Outside Air:
1. Identification/location
2. Design air flow
3. Actual air flow
4. Design return air flow
5. Actual return air flow
6. Design outside air flow
7. Actual outside air flow
8. Return air temperature
9. Outside air temperature
10. Required mixed air temperature
11. Actual mixed air temperature
12. Design outside/return air ratio
13. Actual outside/return air ratio

N. Exhaust Fans:
1. Location
2. Manufacturer
3. Model number
4. Serial number
5. Air flow, specified and actual
6. Total static pressure (total external), specified and actual
7. Inlet pressure
8. Discharge pressure
9. Sheave Make/Size/Bore
10. Number of Belts/Make/Size
11. Fan RPM
12. Associated with Fume Hoods, Include:
    a. Face velocity test at max/min sash position.

O. Duct Traverses:
1. System zone/branch
2. Duct size
3. Area
4. Design velocity
5. Design air flow
6. Test velocity
7. Test air flow
8. Duct static pressure
9. Air temperature
10. Air correction factor

P. Duct Leak Tests:
1. Description of ductwork under test
2. Duct design operating pressure
3. Duct design test static pressure

4. Duct capacity, air flow
5. Maximum allowable leakage duct capacity times leak factor
6. Test apparatus
   a. Blower
   b. Orifice, tube size
   c. Orifice size
   d. Calibrated
7. Test static pressure
8. Test orifice differential pressure
9. Leakage

Q. Flow Measuring Stations:
1. Identification/number
2. Location
3. Size
4. Manufacturer
5. Model number
6. Serial number
7. Design Flow rate
8. Design pressure drop
9. Actual/final pressure drop
10. Actual/final flow rate
11. Station calibrated setting

R. Terminal Unit Data:
1. Manufacturer
2. Type, constant, variable, single, dual duct
3. Identification/number
4. Location
5. Model number
6. Size
7. Minimum static pressure
8. Minimum design air flow
9. Maximum design air flow
10. Maximum actual air flow
11. Inlet static pressure

S. Air Distribution Tests:
1. Air terminal number
2. Room number/location
3. Terminal type
4. Terminal size
5. Area factor
6. Design velocity
7. Design air flow
8. Test (final) velocity
9. Test (final) air flow
10. Percent of design air flow

T. Sound Level Reports:
1. Location
2. Octave bands - equipment off
3. Octave bands - equipment on

U. Vibration Tests:

1. Location of points:
    a. Fan bearing, drive end
    b. Fan bearing, opposite end
    c. Motor bearing, center (if applicable)
    d. Motor bearing, drive end
    e. Motor bearing, opposite end
    f. Casing (bottom or top)
    g. Casing (side)
    h. Duct after flexible connection (discharge)
    i. Duct after flexible connection (suction)
2. Test readings:
    a. Horizontal, velocity and displacement
    b. Vertical, velocity and displacement
    c. Axial, velocity and displacement
3. Normally acceptable readings, velocity and acceleration
4. Unusual conditions at time of test
5. Vibration source (if non-complying)

END OF SECTION

SECTION 23 07 13

DUCT INSULATION

PART 1 GENERAL

1.01 SECTION INCLUDES

A. Duct insulation.

B. Duct Lagging.

C. Insulation jackets.

1.02 RELATED REQUIREMENTS

A. Section 09 90 00 - Painting and Coating: Painting insulation jackets.

B. Section 22 05 53 - Identification for Plumbing Piping and Equipment.

C. Section 23 05 53 - Identification for HVAC Piping and Equipment.

D. Section 23 31 00 - HVAC Ducts and Casings: Glass fiber ducts.

1.03 REFERENCE STANDARDS

A. ASTM B209 - Standard Specification for Aluminum and Aluminum-Alloy Sheet and Plate.

B. ASTM B209M - Standard Specification for Aluminum and Aluminum-Alloy Sheet and Plate [Metric].

C. ASTM C518 - Standard Test Method for Steady-State Thermal Transmission Properties by Means of the Heat Flow Meter Apparatus.

D. ASTM C553 - Specification for Mineral Fiber Blanket Thermal Insulation for Commercial and Industrial Applications.

E. ASTM C612 - Standard Specification for Mineral Fiber Block and Board Thermal Insulation.

F. ASTM C916 - Standard Specification for Adhesives for Duct Thermal Insulation.

G. ASTM C1071 - Standard Specification for Fibrous Glass Duct Lining Insulation (Thermal and Sound Absorbing Material).

H. ASTM E84 - Standard Test Method for Surface Burning Characteristics of Building Materials.

I. ASTM E96/E96M - Standard Test Methods for Water Vapor Transmission of Materials.

J. ASTM G21 - Standard Practice for Determining Resistance of Synthetic Polymeric Materials to Fungi.

K. NFPA 255 - Standard Method of Test of Surface Burning Characteristics of Building Materials; National Fire Protection Association.

L. SMACNA (DCS) - HVAC Duct Construction Standards; Sheet Metal and Air Conditioning Contractors' National Association.

M. UL 723 - Standard for Test for Surface Burning Characteristics of Building Materials; Underwriters Laboratories Inc..

1.04 SUBMITTALS

A. Product Data: Provide product description, thermal characteristics, list of materials and thickness for each service, and locations.

B. Manufacturer's Instructions: Indicate installation procedures necessary to ensure acceptable workmanship and that installation standards will be achieved.

1.05 QUALITY ASSURANCE

A. Manufacturer Qualifications: Company specializing in manufacturing products of the type specified in this section with not less than three years of documented experience.

B. Applicator Qualifications: Company specializing in performing the type of work specified in this section, with minimum three years of experience and approved by manufacturer.

1.06 DELIVERY, STORAGE, AND HANDLING

A. Accept materials on site in original factory packaging, labelled with manufacturer's identification, including product density and thickness.

B. Protect insulation from weather and construction traffic, dirt, water, chemical, and mechanical damage, by storing in original wrapping.

1.07 FIELD CONDITIONS

A. Maintain ambient temperatures and conditions required by manufacturers of adhesives, mastics, and insulation cements.

B. Maintain temperature during and after installation for minimum period of 24 hours.

PART 2 PRODUCTS

2.01 REQUIREMENTS FOR ALL PRODUCTS OF THIS SECTION

A. Surface Burning Characteristics: Flame spread/Smoke developed index of 25/50, maximum, when tested in accordance with ASTM E84, NFPA 255, or UL 723.

2.02 GLASS FIBER, FLEXIBLE

A. Manufacturer:
   1. Knauf Insulation: www.knaufusa.com.
   2. Johns Manville Corporation: www.jm.com.
   3. Owens Corning Corp: www.owenscorning.com.
   4. CertainTeed Corporation: www.certainteed.com.

B. Insulation: ASTM C553; flexible, noncombustible blanket.
   1. 'K' value: 0.36 at 75 degrees F, when tested in accordance with ASTM C518.
   2. Maximum Service Temperature: 450 degrees F.
   3. Maximum Water Vapor Sorption: 5.0 percent by weight.

C. Vapor Barrier Jacket:
   1. Moisture Vapor Permeability: 0.02 perm inch, when tested in accordance with ASTM E96/E96M.
   2. Secure with pressure sensitive tape.

D. Vapor Barrier Tape:
   1. Kraft paper reinforced with glass fiber yarn and bonded to aluminized film, with pressure sensitive rubber based adhesive.

E. Outdoor Vapor Barrier Mastic:
   1. Vinyl emulsion type acrylic or mastic, compatible with insulation, black color.

F. Tie Wire: Annealed steel, 16 gage.

2.03 GLASS FIBER, RIGID

A. Manufacturer:
   1. Knauf Insulation: www.knaufusa.com.
   2. Johns Manville Corporation: www.jm.com.
   3. Owens Corning Corp: www.owenscorning.com.
   4. CertainTeed Corporation: www.certainteed.com.

B. Insulation: ASTM C612; rigid, noncombustible blanket.
   1. 'K' value: 0.24 at 75 degrees F, when tested in accordance with ASTM C518.
   2. Maximum service temperature: 450 degrees F.
   3. Maximum Water Vapor Sorption: 5.0 percent.
   4. Maximum Density: 8.0 lb/cu ft.

C. Vapor Barrier Jacket:
   1. Moisture Vapor Permeability: 0.02 perm inch, when tested in accordance with ASTM E96/E96M.
   2. Secure with pressure sensitive tape.

D. Vapor Barrier Tape:
   1. Kraft paper reinforced with glass fiber yarn and bonded to aluminized film, with pressure sensitive rubber based adhesive.

E. Indoor Vapor Barrier Finish:
   1. Cloth: Untreated; 9 oz/sq yd weight, glass fabric.
   2. Vinyl emulsion type acrylic, compatible with insulation, black color.

2.04 JACKETS

A. Aluminum Jacket: ASTM B209 (ASTM B209M).
   1. Thickness: 0.016 inch sheet.
   2. Finish: Smooth.
   3. Joining: Longitudinal slip joints and 2 inch laps.
   4. Fittings: 0.016 inch thick die shaped fitting covers with factory attached protective liner.
   5. Metal Jacket Bands: 3/8 inch wide; 0.015 inch thick aluminum.
   6. Metal Jacket Bands: 3/8 inch wide; 0.010 inch thick stainless steel.

2.05 DUCT LAGGING

A. Manufacturers:
   1. Sound Seal: www.soundseal.com
   2. Kinetics Noise Control: www.kineticsnoise.com.
   3. Substitutions: See Section 01 60 00 - Product Requirements.

B. Lagging: Loaded vinyl noise barrier with a scrim reinforced aluminum foil facing on one side with a 1" thick fiberglass decoupler.
   1. Apparent Thermal Conductivity: Maximum of.25 at 75 degrees F
   2. Service Temperature: Up to 350 degrees F.

C. Adhesive: Waterproof, fire-retardant type, ASTM C916.

PART 3 EXECUTION

3.01 EXAMINATION

A. Verify that ducts have been tested before applying insulation materials.

B. Verify that surfaces are clean, foreign material removed, and dry.

3.02 INSTALLATION

A. Install in accordance with manufacturer's instructions.

B. Install in accordance with NAIMA National Insulation Standards.

C. Insulated ducts conveying air below ambient temperature:
   1. Provide insulation with vapor barrier jackets.
   2. Finish with tape and vapor barrier jacket.
   3. Continue insulation through walls, sleeves, hangers, and other duct penetrations.
   4. Insulate entire system including fittings, joints, flanges, fire dampers, flexible connections, and expansion joints.

D. Insulated ducts conveying air above ambient temperature:
   1. Provide with or without standard vapor barrier jacket.
   2. Insulate fittings and joints. Where service access is required, bevel and seal ends of insulation.

E. Exterior Applications: Provide insulation with vapor barrier jacket. Cover with with calked aluminum jacket with seams located on bottom side of horizontal duct section.

F. External Duct Insulation Application:
   1. Secure insulation with vapor barrier with wires and seal jacket joints with vapor barrier adhesive or tape to match jacket.
   2. Secure insulation without vapor barrier with staples, tape, or wires.
   3. Install without sag on underside of duct. Use adhesive or mechanical fasteners where necessary to prevent sagging. Lift duct off trapeze hangers and insert spacers.
   4. Seal vapor barrier penetrations by mechanical fasteners with vapor barrier adhesive.
   5. Stop and point insulation around access doors and damper operators to allow operation without disturbing wrapping.

3.03 SCHEDULES

A. INDOOR DUCT AND PLENUM APPLICATION SCHEDULE
   1. NOTE: Apply duct lagging where indicated on drawings.
   2. Service: Round, supply-air ducts, concealed.
      a. Material: Mineral-fiber blanket.
      b. Thickness: 1-1/2 inches.
      c. Jacket: Foil and paper.
      d. Vapor Retarder Required: Yes.
   3. Service: Round, return-air ducts, concealed.
      a. Material: Mineral-fiber blanket.
      b. Thickness: 1 inch.
      c. Jacket: Foil and paper.
      d. Vapor Retarder Required: No.
   4. Service: Round, outside-air ducts, concealed.
      a. Material: Mineral-fiber blanket
      b. Thickness: 1-1/2 inches.
      c. Jacket: Foil and paper.
      d. Vapor Retarder Required: Yes.
   5. Service: Rectangular, supply-air ducts, concealed.
      a. Material: Mineral-fiber blanket
      b. Thickness: 1-1/2 inches.
      c. Jacket: Foil and paper.

   d. Vapor Retarder Required: Yes.
6. Service: Rectangular, return-air ducts, concealed.
   a. Material: Mineral-fiber blanket
   b. Thickness: 1 inch.
   c. Jacket: Foil and paper.
   d. Vapor Retarder Required: No.
7. Service: Rectangular, outside-air ducts, concealed.
   a. Material: Mineral-fiber blanket
   b. Thickness: 1- 1/2 inches.
   c. Jacket: Foil and paper.
   d. Vapor Retarder Required: Yes.
8. Service: Round, supply-air ducts, exposed.
   a. Material: Mineral-fiber blanket
   b. Thickness: 2 inches.
   c. Jacket: Spiral-wound steel, paintable.
   d. Vapor Retarder Required: Yes.
9. Service: Round, return-air ducts, exposed.
   a. Material: Mineral-fiber board.
   b. Thickness: 1 inch.
   c. Jacket: Spiral-wound steel, paintable.
   d. Vapor Retarder Required: No.
   e. NOTE: Provide double-walled spiral ductwork in areas noted on drawings as defined in specification section 15890.
10. Service: Round, outside-air ducts, exposed.
   a. Material: Mineral-fiber board.
   b. Thickness: 2 inches.
   c. Jacket: Spiral-wound steel, paintable.
   d. Vapor Retarder Required: Yes.
   e. NOTE: Provide double-walled spiral ductwork in areas noted on drawings as defined in specification section 15890.
11. Service: Rectangular, supply-air ducts, exposed.
   a. Material: Mineral-fiber board.
   b. Thickness: 2 inches.
   c. Jacket: Aluminum, painted to architects specifications.
   d. Vapor Retarder Required: Yes.
12. Service: Rectangular, return-air ducts, exposed.
   a. Material: Mineral-fiber board.
   b. Thickness: 1 inch.
   c. Jacket: Aluminum, painted to architects specifications
   d. Vapor Retarder Required: No.
13. Service: Rectangular, outside-air ducts, exposed.
   a. Material: Mineral-fiber board.
   b. Thickness: 2 inches.
   c. Jacket: Aluminum, painted to architects specifications.
   d. Vapor Retarder Required: Yes.
14. Service: Rectangular, dishwasher exhaust ducts, concealed.
   a. Material: Mineral-fiber blanket.
   b. Thickness: 1/2 inch.
   c. Jacket: Foil and Paper
   d. Vapor Retarder Required: No.
15. Service: Rectangular, dishwasher exhaust ducts, exposed.
   a. Material: Mineral-fiber board.
   b. Thickness: 1/2 inch.

c. Jacket: Aluminum
d. Vapor Retarder Required: No.

B. OUTDOOR DUCT AND PLENUM APPLICATION SCHEDULE
1. Service: Round, supply-air ducts.
a. Material: Mineral-fiber board.
b. Thickness: 2 inches.
c. Field-Applied Jacket: aluminum
1) Aluminum Thickness: 0.032 inch
d. Vapor Retarder Required: Yes.
2. Service: Round, return-air ducts.
a. Material: Mineral-fiber board.
b. Thickness: 2 inches.
c. Field-Applied Jacket: aluminum
1) Aluminum Thickness: 0.032 inch
d. Vapor Retarder Required: Yes.
3. Service: Rectangular, supply-air ducts.
a. Material: Mineral-fiber board.
b. Thickness: 2 inches.
c. Field-Applied Jacket: aluminum
1) Aluminum Thickness: 0.032 inch
d. Vapor Retarder Required: Yes.
4. Service: Rectangular, return-air ducts.
a. Material: Mineral-fiber board.
b. Thickness: 2 inches.
c. Field-Applied Jacket: aluminum
1) Aluminum Thickness: 0.032 inch
d. Vapor Retarder Required: Yes.

END OF SECTION

SECTION 23 07 16

HVAC EQUIPMENT INSULATION

PART 1 GENERAL

1.01 SECTION INCLUDES

A. Equipment insulation.

B. Covering.

C. Breeching insulation.

1.02 RELATED REQUIREMENTS

A. Section 01 61 16 - Volatile Organic Compound (VOC) Content Restrictions.

B. Section 09 90 00 - Painting and Coating: Painting insulation covering.

C. Section 23 05 53 - Identification for HVAC Piping and Equipment.

D. Section 23 21 13 - Hydronic Piping: Placement of hangers and hanger inserts.

E. Section 23 21 14 - Hydronic Specialties.

F. Section 23 23 00 - Refrigerant Piping: Placement of inserts.

1.03 REFERENCE STANDARDS

A. ASTM A666 - Standard Specification for Annealed or Cold-Worked Austenitic Stainless Steel Sheet, Strip, Plate, and Flat Bar.

B. ASTM B209 - Standard Specification for Aluminum and Aluminum-Alloy Sheet and Plate.

C. ASTM B209M - Standard Specification for Aluminum and Aluminum-Alloy Sheet and Plate [Metric].

D. ASTM C177 - Standard Test Method for Steady-State Heat Flux Measurements and Thermal Transmission Properties by Means of the Guarded-Hot-Plate Apparatus.

E. ASTM C449 - Standard Specification for Mineral Fiber Hydraulic-Setting Thermal Insulating and Finishing Cement.

F. ASTM C518 - Standard Test Method for Steady-State Thermal Transmission Properties by Means of the Heat Flow Meter Apparatus.

G. ASTM C533 - Standard Specification for Calcium Silicate Block and Pipe Thermal Insulation.

H. ASTM C534/C534M - Standard Specification for Preformed Flexible Elastomeric Cellular Thermal Insulation in Sheet and Tubular Form.

I. ASTM C552 - Standard Specification for Cellular Glass Thermal Insulation.

J. ASTM C553 - Specification for Mineral Fiber Blanket Thermal Insulation for Commercial and Industrial Applications.

K. ASTM C592 - Standard Specification for Mineral Fiber Blanket Insulation and Blanket-Type Pipe Insulation (Metal-Mesh Covered) (Industrial Type).

L. ASTM C612 - Standard Specification for Mineral Fiber Block and Board Thermal Insulation.

M. ASTM E84 - Standard Test Method for Surface Burning Characteristics of Building Materials.

N. ASTM E96/E96M - Standard Test Methods for Water Vapor Transmission of Materials.

O. NFPA 255 - Standard Method of Test of Surface Burning Characteristics of Building Materials; National Fire Protection Association.

P. UL 723 - Standard for Test for Surface Burning Characteristics of Building Materials; Underwriters Laboratories Inc..

1.04 SUBMITTALS

A. See Section 01 30 00 - Administrative Requirements, for submittal procedures.

B. Product Data: Provide product description, thermal characteristics, list of materials and thickness for equipment scheduled.

C. Manufacturer's Instructions: Indicate installation procedures that ensure acceptable workmanship and installation standards will be achieved.

1.05 QUALITY ASSURANCE

A. Manufacturer Qualifications: Company specializing in manufacturing the products specified in this section with not less than three years of documented experience.

B. Applicator Qualifications: Company specializing in performing the type of work specified in this section and approved by manufacturer.

1.06 DELIVERY, STORAGE, AND HANDLING

A. Accept materials on site in original factory packaging, labeled with manufacturer's identification, including product density and thickness.

B. Protect insulation from weather and construction traffic, dirt, water, chemical, and mechanical damage, by storing in original wrapping.

1.07 FIELD CONDITIONS

A. Maintain ambient temperatures and conditions required by manufacturers of adhesives, mastics, and insulation cements.

B. Maintain temperature during and after installation for minimum period of 24 hours.

PART 2 PRODUCTS

2.01 REQUIREMENTS FOR ALL PRODUCTS OF THIS SECTION

A. Surface Burning Characteristics: Flame spread/Smoke developed index of 25/50, maximum, when tested in accordance with ASTM E84, NFPA 255, or UL 723.

2.02 GLASS FIBER, FLEXIBLE

A. Manufacturers:
   1. Knauf Insulation; : www.knaufusa.com.
   2. Johns Manville Corporation; : www.jm.com.
   3. Owens Corning Corp; : www.owenscorning.com.
   4. CertainTeed Corporation; : www.certainteed.com.

B. Insulation: ASTM C553; flexible, noncombustible.
   1. 'K' Value: 0.36 at 75 degrees F, when tested in accordance with ASTM C177 or ASTM C518.

2. Maximum Service Temperature: 450 degrees F.
3. Maximum Water Vapor Sorption: 5.0 percent by weight.

C. Vapor Barrier Jacket: Kraft paper reinforced with glass fiber yarn and bonded to aluminized film.
1. Moisture Vapor Permeability: 0.02 perm inch, when tested in accordance with ASTM E96/E96M.
2. Secure with self-sealing longitudinal laps and butt strips.

D. Tie Wire: 0.048 inch stainless steel with twisted ends on maximum 12 inch centers.

2.03 GLASS FIBER, RIGID

A. Manufacturer:
1. Knauf Insulation: www.knaufusa.com.
2. Johns Manville Corporation: www.jm.com.
3. Owens Corning Corp: www.owenscorning.com.
4. CertainTeed Corporation; : www.certainteed.com.

B. Insulation: ASTM C612 or ASTM C592; rigid, noncombustible.
1. 'K' Value: 0.25 at 75 degrees F, when tested in accordance with ASTM C177 or ASTM C518.
2. Maximum Service Temperature: 850 degrees F.
3. Maximum Water Vapor Sorption: 5.0 percent by weight.
4. Maximum Density: 8.0 lb/cu ft.

C. Vapor Barrier Jacket:
1. Kraft paper reinforced with glass fiber yarn and bonded to aluminized film.
2. Moisture Vapor Permeability: 0.02 perm inch, when tested in accordance with ASTM E96/E96M.
3. Secure with self-sealing longitudinal laps and butt strips.

2.04 FLEXIBLE ELASTOMERIC CELLULAR INSULATION

A. Manufacturer:
1. Armacell International: www.armacell.com.
2. Substitutions: See Section 01 60 00 - Product Requirements.

B. Insulation: Preformed flexible elastomeric cellular rubber insulation complying with ASTM C534 Grade 3, in sheet form.
1. Minimum Service Temperature: -40 degrees F.
2. Maximum Service Temperature: 220 degrees F.
3. Connection: Waterproof vapor barrier adhesive.

2.05 JACKETS

A. PVC Plastic:
1. Jacket: Sheet material, off-white color.
a. Minimum Service Temperature: -40 degrees F.
b. Maximum Service Temperature: 150 degrees F.
c. Moisture Vapor Permeability: 0.02 perm inch, when tested in accordance with ASTM E96/E96M.
d. Thickness: 10 mil.
e. Connections: Brush on welding adhesive.

PART 3 EXECUTION

3.01 EXAMINATION

A. Verify that equipment has been tested before applying insulation materials.

B. Verify that surfaces are clean and dry, with foreign material removed.

3.02 INSTALLATION

A. Install in accordance with manufacturer's instructions.

B. Factory Insulated Equipment: Do not insulate.

C. Exposed Equipment: Locate insulation and cover seams in least visible locations.

D. Apply insulation close to equipment by grooving, scoring, and beveling insulation. Fasten insulation to equipment with studs, pins, clips, adhesive, wires, or bands.

E. Fill joints, cracks, seams, and depressions with bedding compound to form smooth surface. On cold equipment, use vapor barrier cement.

F. Insulated equipment containing fluids below ambient temperature: Insulate entire system.

G. Fiber glass insulated equipment containing fluids below ambient temperature: Provide vapor barrier jackets, factory-applied or field-applied. Finish with glass cloth and vapor barrier adhesive.

H. For hot equipment containing fluids 140 degrees F or less, do not insulate flanges and unions, but bevel and seal ends of insulation.

I. For hot equipment containing fluids over 140 degrees F, insulate flanges and unions with removable sections and jackets.

J. Fiber glass insulated equipment containing fluids above ambient temperature: Provide standard jackets, with or without vapor barrier, factory-applied or field-applied. Finish with glass cloth and adhesive.

K. Inserts and Shields:
   1. Application: Equipment 1-1/2 inches diameter or larger.
   2. Shields: Galvanized steel between hangers and inserts.
   3. Insert location: Between support shield and equipment and under the finish jacket.
   4. Insert configuration: Minimum 6 inches long, of same thickness and contour as adjoining insulation; may be factory fabricated.
   5. Insert material: Hydrous calcium silicate insulation or other heavy density insulating material suitable for the planned temperature range.

L. Finish insulation at supports, protrusions, and interruptions.

M. Equipment in Mechanical Equipment Rooms or Finished Spaces: Finish with canvas jacket sized for finish painting.

N. Exterior Applications: Provide vapor barrier jacket or finish with glass mesh reinforced vapor barrier cement. Cover with aluminum jacket with seams located on bottom side of horizontal equipment.

O. Cover glass fiber insulation with metal mesh and finish with heavy coat of insulating cement aluminum jacket.

P. Nameplates and ASME Stamps: Bevel and seal insulation around; do not insulate over.

Q. Equipment Requiring Access for Maintenance, Repair, or Cleaning: Install insulation so it can be easily removed and replaced without damage.

3.03 SCHEDULE

A. Heating, cooling, and dual temperature hydronic systems:
   1. Pump Bodies: 1.5" thick fiberglass insulation, vapor barrier, PVC jacket.
   2. Heat Exchangers/Converters: 1.5" thick fiberglass insulation, vapor barrier, PVC jacket.
   3. Air Separators:1.5" thick fiberglass insulation, vapor barrier, PVC jacket.
   4. Expansion Tanks:1.5" thick fiberglass insulation, vapor barrier, PVC jacket.
   5. Absorption Chiller Hot Surfaces (Not Factory Insulated): 1.5" thick fiberglass insulation, vapor barrier, PVC jacket.
   6. Chiller Cold Surfaces (Not Factory Insulated):1.5" thick fiberglass insulation, vapor barrier, PVC jacket.

END OF SECTION

SECTION 23 07 19

HVAC PIPING INSULATION

PART 1 GENERAL

1.01 SECTION INCLUDES

A. Piping insulation.

B. Jackets and accessories.

1.02 RELATED REQUIREMENTS

A. Section 07 84 00 - Firestopping.

B. Section 09 90 00 - Painting and Coating: Painting insulation jacket.

C. Section 22 10 05 - Plumbing Piping: Placement of hangers and hanger inserts.

D. Section 23 21 13 - Hydronic Piping: Placement of hangers and hanger inserts.

E. Section 23 23 00 - Refrigerant Piping: Placement of inserts.

1.03 REFERENCE STANDARDS

A. ASTM A666 - Standard Specification for Annealed or Cold-Worked Austenitic Stainless Steel Sheet, Strip, Plate, and Flat Bar.

B. ASTM B209 - Standard Specification for Aluminum and Aluminum-Alloy Sheet and Plate.

C. ASTM B209M - Standard Specification for Aluminum and Aluminum-Alloy Sheet and Plate [Metric].

D. ASTM C177 - Standard Test Method for Steady-State Heat Flux Measurements and Thermal Transmission Properties by Means of the Guarded Hot Plate Apparatus.

E. ASTM C195 - Standard Specification for Mineral Fiber Thermal Insulating Cement.

F. ASTM C449 - Standard Specification for Mineral Fiber Hydraulic-Setting Thermal Insulating and Finishing Cement.

G. ASTM C518 - Standard Test Method for Steady-State Thermal Transmission Properties by Means of the Heat Flow Meter Apparatus.

H. ASTM C533 - Standard Specification for Calcium Silicate Block and Pipe Thermal Insulation.

I. ASTM C534/C534M - Standard Specification for Preformed Flexible Elastomeric Cellular Thermal Insulation in Sheet and Tubular Form.

J. ASTM C547 - Standard Specification for Mineral Fiber Pipe Insulation.

K. ASTM C552 - Standard Specification for Cellular Glass Thermal Insulation.

L. ASTM C578 - Standard Specification for Rigid, Cellular Polystyrene Thermal Insulation.

M. ASTM C585 - Standard Practice for Inner and Outer Diameters of Rigid Thermal Insulation for Nominal Sizes of Pipe and Tubing (NPS System).

N. ASTM C591 - Standard Specification for Unfaced Preformed Rigid Cellular Polyisocyanurate Thermal Insulation.

O. ASTM C610 - Standard Specification for Molded Expanded Perlite Block and Pipe Thermal Insulation.

P. ASTM C795 - Standard Specification for Thermal Insulation for Use in Contact with Austenitic Stainless Steel.

Q. ASTM D1056 - Standard Specification for Flexible Cellular Materials--Sponge or Expanded Rubber.

R. ASTM D2842 - Standard Test Method for Water Absorption of Rigid Cellular Plastics.

S. ASTM E84 - Standard Test Method for Surface Burning Characteristics of Building Materials.

T. ASTM E96/E96M - Standard Test Methods for Water Vapor Transmission of Materials.

U. NFPA 255 - Standard Method of Test of Surface Burning Characteristics of Building Materials; National Fire Protection Association.

V. UL 723 - Standard for Test for Surface Burning Characteristics of Building Materials; Underwriters Laboratories Inc..

1.04 SUBMITTALS

A. Product Data: Provide product description, thermal characteristics, list of materials and thickness for each service, and locations.

B. Manufacturer's Instructions: Indicate installation procedures that ensure acceptable workmanship and installation standards will be achieved.

1.05 QUALITY ASSURANCE

A. Manufacturer Qualifications: Company specializing in manufacturing the Products specified in this section with not less than three years of documented experience.

B. Applicator Qualifications: Company specializing in performing the type of work specified in this section with minimum three years of experience.

1.06 DELIVERY, STORAGE, AND HANDLING

A. Accept materials on site, labeled with manufacturer's identification, product density, and thickness.

1.07 FIELD CONDITIONS

A. Maintain ambient conditions required by manufacturers of each product.

B. Maintain temperature before, during, and after installation for minimum of 24 hours.

PART 2 PRODUCTS

2.01 REQUIREMENTS FOR ALL PRODUCTS OF THIS SECTION

A. Surface Burning Characteristics: Flame spread/Smoke developed index of 25/50, maximum, when tested in accordance with ASTM E84, NFPA 255, or UL 723.

2.02 GLASS FIBER

A. Manufacturers:
   1. Knauf Insulation: www.knaufusa.com.
   2. Johns Manville Corporation: www.jm.com.
   3. Owens Corning Corp: www.owenscorning.com.

4. CertainTeed Corporation: www.certainteed.com.

B. Insulation: ASTM C547 and ASTM C795; rigid molded, noncombustible.
1. 'K' value: ASTM C177, 0.24 at 75 degrees F.
2. Maximum service temperature: 850 degrees F.
3. Maximum moisture absorption: 0.2 percent by volume.

C. Insulation: ASTM C547 and ASTM C795; semi-rigid, noncombustible, end grain adhered to jacket.
1. 'K' value: ASTM C177, 0.24 at 75 degrees F.
2. Maximum service temperature: 650 degrees F.
3. Maximum moisture absorption: 0.2 percent by volume.

D. Vapor Barrier Jacket: White kraft paper with glass fiber yarn, bonded to aluminized film; moisture vapor transmission when tested in accordance with ASTM E96/E96M of 0.02 perm-inches.

E. Tie Wire: 0.048 inch stainless steel with twisted ends on maximum 12 inch centers.

F. Vapor Barrier Lap Adhesive:
1. Compatible with insulation.

G. Insulating Cement/Mastic:
1. ASTM C195; hydraulic setting on mineral wool.

H. Fibrous Glass Fabric:
1. Cloth: Untreated; 9 oz/sq yd weight.
2. Blanket: 1.0 lb/cu ft density.
3. Weave: 5x5.

I. Indoor Vapor Barrier Finish:
1. Cloth: Untreated; 9 oz/sq yd weight.
2. Vinyl emulsion type acrylic, compatible with insulation, black color.

J. Outdoor Vapor Barrier Mastic:
1. Vinyl emulsion type acrylic or mastic, compatible with insulation, black color.

K. Outdoor Breather Mastic:
1. Vinyl emulsion type acrylic or mastic, compatible with insulation, black color.

L. Insulating Cement:
1. ASTM C449/C449M.

2.03 CELLULAR GLASS

A. Manufacturers:
1. Pittsburgh Corning Corporation: www.foamglasinsulation.com.
2. Substitutions: See Section 01 60 00 - Product Requirements.

B. Insulation: ASTM C552, Grade 1.
1. 'K' value: 0.37 at 100 degrees F.
2. Service Temperature: Up to 900 degrees F.
3. Water Vapor Permeability: 0.005 perm inch.
4. Water Absorption: 0.2 percent by volume, maximum.

2.04 EXPANDED POLYSTYRENE

A. Insulation: ASTM C578; rigid closed cell.
1. 'K' value: 0.23 at 75 degrees F.

2. Maximum service temperature: 165 degrees F.
3. Maximum water vapor permeance: 5.0 perms

2.05 EXPANDED PERLITE

A. Manufacturers:
1. Schundler Company: www.schundler.com.

B. Insulation: ASTM C610, molded.
1. Maximum service temperature: 1200 degrees F.
2. Maximum water vapor transmission: 0.1 perm.

2.06 HYDROUS CALCIUM SILICATE

A. Manufacturers:
1. Johns Manville Corporation: www.jm.com.
2. Substitutions: See Section 01 60 00 - Product Requirements.

B. Insulation: ASTM C533 and ASTM C795; rigid molded, asbestos free, gold color.
1. 'K' value: ASTM C177 and C518; 0.40 at 300 degrees F, when tested in accordance with ASTM C177 or ASTM C518.
2. Maximum service temperature: 1200 degrees F.
3. Density: 15 lb/cu ft.

C. Tie Wire: 0.048 inch stainless steel with twisted ends on maximum 12 inch centers.

D. Insulating Cement:
1. ASTM C449/C449M.

2.07 POLYISOCYANURATE CELLULAR PLASTIC

A. Insulation Material: ASTM C591, rigid molded modified polyisocyanurate cellular plastic.
1. Dimension: Comply with requirements of ASTM C585.
2. 'K' value: 0.18 at 75 degrees F, when tested in accordance with ASTM C518.
3. Minimum Service Temperature: -70 degrees F.
4. Maximum Service Temperature: 300 degrees F.
5. Water Absorption: 0.5 percent by volume, maximum, when tested in accordance with ASTM D2842..
6. Moisture Vapor Transmission: 4.0 perm in.
7. Connection: Waterproof vapor barrier adhesive.

2.08 POLYETHYLENE

A. Manufacturers:
1. Armacell International: www.armacell.com.
2. Substitutions: See Section 01 60 00 - Product Requirements.

B. Insulation: Flexible closed-cell polyethylene tubing, slit lengthwise for installation, complying with applicable requirements of ASTM D1056.
1. 'K' value: ASTM C177; 0.25 at 75 degrees F.
2. Maximum Service Temperature: 200 degrees F.
3. Density: 2 lb/cu ft.
4. Maximum Moisture Absorption: 1.0 percent by volume.
5. Moisture Vapor Permeability: 0.05 perm inch, when tested in accordance with ASTM E96/E96M.
6. Connection: Contact adhesive.

2.09 FLEXIBLE ELASTOMERIC CELLULAR INSULATION

A. Manufacturer:
   1. Armacell International: www.armacell.com.
   2. Substitutions: See Section 01 60 00 - Product Requirements.

B. Insulation: Preformed flexible elastomeric cellular rubber insulation complying with ASTM C534 Grade 3; use molded tubular material wherever possible.
   1. Minimum Service Temperature: -40 degrees F.
   2. Maximum Service Temperature: 220 degrees F.
   3. Connection: Waterproof vapor barrier adhesive.

C. Elastomeric Foam Adhesive: Air dried, contact adhesive, compatible with insulation.

2.10 JACKETS

A. PVC Plastic.
   1. Manufacturers:
      a. Johns Manville Corporation: www.jm.com.
      b. Substitutions: See Section 01 60 00 - Product Requirements.
   2. Jacket: One piece molded type fitting covers and sheet material, off-white color.
      a. Minimum Service Temperature: 0 degrees F.
      b. Maximum Service Temperature: 150 degrees F.
      c. Moisture Vapor Permeability: 0.002 perm inch, maximum, when tested in accordance with ASTM E96/E96M.
      d. Thickness: 10 mil.
      e. Connections: Brush on welding adhesive.
   3. Covering Adhesive Mastic:
      a. Compatible with insulation.

B. ABS Plastic:
   1. Jacket: One piece molded type fitting covers and sheet material, off-white color.
      a. Minimum Service Temperature: -40 degrees F.
      b. Maximum Service Temperature of 180 degrees F.
      c. Moisture Vapor Permeability: 0.012 perm inch, when tested in accordance with ASTM E96/E96M.
      d. Thickness: 30 mil.
      e. Connections: Brush on welding adhesive.

C. Canvas Jacket: UL listed 6 oz/sq yd plain weave cotton fabric treated with dilute fire retardant lagging adhesive.
   1. Lagging Adhesive:
      a. Compatible with insulation.

D. Aluminum Jacket: ASTM B209 (ASTM B209M) formed aluminum sheet.
   1. Thickness: 0.016 inch sheet.
   2. Finish: Smooth.
   3. Joining: Longitudinal slip joints and 2 inch laps.
   4. Fittings: 0.016 inch thick die shaped fitting covers with factory attached protective liner.
   5. Metal Jacket Bands: 3/8 inch wide; 0.015 inch thick aluminum.
   6. Metal Jacket Bands: 3/8 inch wide; 0.010 inch thick stainless steel.

E. Stainless Steel Jacket: ASTM A666, Type 302 stainless steel.
   1. Thickness: 0.010 inch.
   2. Finish: Smooth.
   3. Metal Jacket Bands: 3/8 inch wide; 0.010 inch thick stainless steel.

PART 3 EXECUTION

3.01 EXAMINATION

A. Verify that piping has been tested before applying insulation materials.

B. Verify that surfaces are clean and dry, with foreign material removed.

3.02 INSTALLATION

A. Install in accordance with manufacturer's instructions.

B. Install in accordance with NAIMA National Insulation Standards.

C. Exposed Piping: Locate insulation and cover seams in least visible locations.

D. Insulated pipes conveying fluids below ambient temperature: Insulate entire system including fittings, valves, unions, flanges, strainers, flexible connections, pump bodies, and expansion joints.

E. Glass fiber insulated pipes conveying fluids below ambient temperature:
   1. Provide vapor barrier jackets, factory-applied or field-applied. Secure with self-sealing longitudinal laps and butt strips with pressure sensitive adhesive. Secure with outward clinch expanding staples and vapor barrier mastic.
   2. Insulate fittings, joints, and valves with molded insulation of like material and thickness as adjacent pipe. Finish with glass cloth and vapor barrier adhesive or PVC fitting covers.

F. For hot piping conveying fluids 140 degrees F or less, do not insulate flanges and unions at equipment, but bevel and seal ends of insulation.

G. For hot piping conveying fluids over 140 degrees F, insulate flanges and unions at equipment.

H. Glass fiber insulated pipes conveying fluids above ambient temperature:
   1. Provide standard jackets, with or without vapor barrier, factory-applied or field-applied. Secure with self-sealing longitudinal laps and butt strips with pressure sensitive adhesive. Secure with outward clinch expanding staples.
   2. Insulate fittings, joints, and valves with insulation of like material and thickness as adjoining pipe. Finish with glass cloth and adhesive or PVC fitting covers.

I. Inserts and Shields:
   1. Application: Piping 1-1/2 inches diameter or larger.
   2. Shields: Galvanized steel between pipe hangers or pipe hanger rolls and inserts.
   3. Insert location: Between support shield and piping and under the finish jacket.
   4. Insert configuration: Minimum 6 inches long, of same thickness and contour as adjoining insulation; may be factory fabricated.
   5. Insert material: Hydrous calcium silicate insulation or other heavy density insulating material suitable for the planned temperature range.

J. Continue insulation through walls, sleeves, pipe hangers, and other pipe penetrations. Finish at supports, protrusions, and interruptions. At fire separations, refer to Section 07 84 00.

K. Pipe Exposed in Mechanical Equipment Rooms or Finished Spaces (less than 10 feet above finished floor): Finish with canvas jacket sized for finish painting.

L. Exterior Applications: Provide vapor barrier jacket. Insulate fittings, joints, and valves with insulation of like material and thickness as adjoining pipe, and finish with glass mesh reinforced vapor barrier cement. Cover with aluminum jacket with seams located on bottom side of horizontal piping. Provide two coats of UV resistant finish for flexible elastomeric cellular insulation without jacketing.

M. Buried Piping: Provide factory fabricated assembly with inner all-purpose service jacket with self-sealing lap, and asphalt impregnated open mesh glass fabric, with one mil thick aluminum foil sandwiched between three layers of bituminous compound; outer surface faced with a polyester film.

N. Heat Traced Piping: Insulate fittings, joints, and valves with insulation of like material, thickness, and finish as adjoining pipe. Size large enough to enclose pipe and heat tracer. Cover with aluminum jacket with seams located on bottom side of horizontal piping.

3.03 SCHEDULE

A. PIPING INSULATION SCHEDULES
   1. General: Abbreviations used in the following schedules include:
      a. Field Applied Jackets: P - PVC, K-Foil and Paper, A - Aluminum, SS - Stainless Steel.
      b. Piping Sizes: NPS - Nominal Pipe Size.

B. INTERIOR PIPING APPLICATION SCHEDULE
   1. Service: Condensate drain piping.
      a. Operating Temperature: 35 to 75 deg F.
      b. Insulation Material: Flexible elastomeric.
      c. Insulation Thickness: 0.5 inch.
      d. Jacket: None.
      e. Vapor Retarder Required: Yes.
      f. Finish: None.

C. Service: Chilled-water and dual-temperature supply and return.
   1. Operating Temperature: 35 to 250 deg F.
   2. Insulation Material: Mineral fiber or glass fiber
   3. Insulation Thickness: Apply the following insulation thicknesses:
      a. Pipe, 1” or less: 1.0 inch.
      b. Pipe, 1 ¼” and up: 1.5 inch.
   4. Jacket: PVC.
   5. Vapor Retarder Required: Yes.
   6. Finish: none

D. Service: Refrigerant suction and hot-gas piping.
   1. Operating Temperature: 35 to 140 deg F.
   2. Insulation Material: Flexible elastomeric.
   3. Insulation Thickness: Apply the following insulation thicknesses:
      a. Pipe, 1” or less: 1.0 inch.
      b. Pipe, 1-1/4” and up: 1.5 inch.
   4. Jacket: None.
   5. Vapor Retarder Required: No.
   6. Finish: None.

E. Service: Heating hot-water supply and return.
   1. Operating Temperature: 100 to 250 deg F.
   2. Insulation Material: Mineral fiber or glass fiber.
   3. Insulation Thickness: Apply the following insulation thicknesses:
      a. Pipe, 1” or less: 1.0 inch.
      b. Pipe, 1-1/4” to 4”: 1.5 inch.
      c. Pipe, 5” and up: 2.0 inch.
   4. Jacket: PVC.
   5. Vapor Retarder Required: No.
   6. Finish: None.

F. EXTERIOR PIPING INSULATION APPLICATION SCHEDULE

G. Service: Refrigerant suction.
   1. Operating Temperature: 35 to 140 deg F.
   2. Insulation Material: Flexible elastomeric.
   3. Insulation Thickness: Apply the following insulation thicknesses:
      a. Pipe, 1” or less: 1.0 inch.
      b. Pipe, 1-1/4” to 2”: 1.5 inch.
      c. Pipe, 2-1/2” and up: 1.5 inch.
   4. Jacket: Aluminum.
   5. Vapor Retarder Required: Yes.
   6. Finish: None.

H. Service: Chilled-water and dual temperature supply and return.
   1. Operating Temperature: 35 to 250 deg F.
   2. Insulation Material: Cellular glass, with jacket.
   3. Insulation Thickness: Apply the following insulation thicknesses:
      a. Pipe, Any pipe size: 2.0 inch.
   4. Field-Applied Jacket: Aluminum.
   5. Vapor Retarder Required: Yes.
   6. Finish: None.

I. Service: Heating hot-water supply and return.
   1. Operating Temperature: 100 to 250 deg F.
   2. Insulation Material: Mineral fiber
   3. Insulation Thickness: Apply the following insulation thicknesses:
      a. Pipe, Any pipe size: 2.0 inch.
   4. Field-Applied Jacket: Aluminum.
   5. Vapor Retarder Required: No.
   6. Finish: None.

END OF SECTION

SECTION 23 08 00

COMMISSIONING OF HVAC

PART 1 GENERAL

1.01 SUMMARY

A. See Section 01 91 13 - General Commissioning Requirements for overall objectives; comply with the requirements of Section 01 91 13.

B. This section covers the Contractor's responsibilities for commissioning; each subcontractor or installer responsible for the installation of a particular system or equipment item to be commissioned is responsible for the commissioning activities relating to that system or equipment item.

C. The Commissioning Authority (CA) directs and coordinates all commissioning activities and provides Prefunctional Checklists and Functional Test Procedures for Contractor's use.

D. The entire HVAC system is to be commissioned, including commissioning activities for the following specific items:
   1. Other equipment and systems explicitly identified elsewhere in Contract Documents as requiring commissioning.

E. The Prefunctional Checklist and Functional Test requirements specified in this section are in addition to, not a substitute for, inspection or testing specified in other sections.

1.02 SUBMITTALS

A. Updated Submittals: Keep the Commissioning Authority informed of all changes to control system documentation made during programming and setup; revise and resubmit when substantial changes are made.

B. DRAFT Prefunctional Checklists and Functional Test Procedures for Control System: Detailed written plan indicating the procedures to be followed to test, checkout and adjust the control system prior to full system Functional Testing; include at least the following for each type of equipment controlled:
   1. System name.
   2. List of devices.
   3. Step-by-step procedures for testing each controller after installation, including:
      a. Process of verifying proper hardware and wiring installation.
      b. Process of downloading programs to local controllers and verifying that they are addressed correctly.
      c. Process of performing operational checks of each controlled component.
      d. Plan and process for calibrating valve and damper actuators and all sensors.
      e. Description of the expected field adjustments for transmitters, controllers and control actuators should control responses fall outside of expected values.
   4. Copy of proposed log and field checkout sheets to be used to document the process; include space for initial and final read values during calibration of each point and space to specifically indicate when a sensor or controller has “passed” and is operating within the contract parameters.
   5. Description of the instrumentation required for testing.
   6. Indicate what tests on what systems should be completed prior to TAB using the control system for TAB work. Coordinate with the Commissioning Authority and TAB contractor for this determination.

C. Startup Reports, Prefunctional Checklists, and Trend Logs: Submit for approval of Commissioning Authority.

D. HVAC Control System O&M Manual Requirements. In addition to documentation specified elsewhere, compile and organize at minimum the following data on the control system:
   1. Specific step-by-step instructions on how to perform and apply all functions, features, modes, etc. mentioned in the controls training sections of this specification and other features of this system. Provide an index and clear table of contents. Include the detailed technical manual for programming and customizing control loops and algorithms.
   2. Full as-built set of control drawings.
   3. Full as-built sequence of operations for each piece of equipment.
   4. Full points list; in addition to the information on the original points list submittal, include a listing of all rooms with the following information for each room:
      a. Floor.
      b. Room number.
      c. Room name.
      d. Air handler unit ID.
      e. Reference drawing number.
      f. Air terminal unit tag ID.
      g. Heating and/or cooling valve tag ID.
      h. Minimum air flow rate.
      i. Maximum air flow rate.
   5. Full print out of all schedules and set points after testing and acceptance of the system.
   6. Full as-built print out of software program.
   7. Electronic copy on disk of the entire program for this facility.
   8. Marking of all system sensors and thermostats on the as-built floor plan and HVAC drawings with their control system designations.
   9. Maintenance instructions, including sensor calibration requirements and methods by sensor type, etc.
   10. Control equipment component submittals, parts lists, etc.
   11. Warranty requirements.
   12. Copies of all checkout tests and calibrations performed by the Contractor (not commissioning tests).
   13. Organize and subdivide the manual with permanently labeled tabs for each of the following data in the given order:
      a. Sequences of operation.
      b. Control drawings.
      c. Points lists.
      d. Controller and/or module data.
      e. Thermostats and timers.
      f. Sensors and DP switches.
      g. Valves and valve actuators.
      h. Dampers and damper actuators.
      i. Program setups (software program printouts).

E. Project Record Documents: See Section 01 78 00 for additional requirements.
   1. Submit updated version of control system documentation, for inclusion with operation and maintenance data.
   2. Show actual locations of all static and differential pressure sensors (air, water and building pressure) and air-flow stations on project record drawings.

F. Draft Training Plan: In addition to requirements specified in Section 01 79 00, include:
   1. Follow the recommendations of ASHRAE Guideline 1.

2. Control system manufacturer's recommended training.
3. Demonstration and instruction on function and overrides of any local packaged controls not controlled by the HVAC control system.

G. Training Manuals: See Section 01 79 00 for additional requirements.
1. Provide three extra copies of the controls training manuals in a separate manual from the O&M manuals.

PART 2 PRODUCTS

2.01 TEST EQUIPMENT

A. Provide all standard testing equipment required to perform startup and initial checkout and required functional performance testing; unless otherwise noted such testing equipment will NOT become the property of Red Clay Consolidated School District.

B. Equipment-Specific Tools: Where special testing equipment, tools and instruments are specific to a piece of equipment, are only available from the vendor, and are required in order to accomplish startup or Functional Testing, provide such equipment, tools, and instruments as part of the work at no extra cost to Red Clay Consolidated School District; such equipment, tools, and instruments are to become the property of Red Clay Consolidated School District.

PART 3 EXECUTION

3.01 PREPARATION

A. Cooperate with the Commissioning Authority in development of the Prefunctional Checklists and Functional Test Procedures.

B. Furnish additional information requested by the Commissioning Authority.

C. Prepare a preliminary schedule for HVAC pipe and duct system testing, flushing and cleaning, equipment start-up and testing, adjusting, and balancing start and completion for use by the Commissioning Authority; update the schedule as appropriate.

D. Notify the Commissioning Authority when pipe and duct system testing, flushing, cleaning, startup of each piece of equipment and testing, adjusting, and balancing will occur; when commissioning activities not yet performed or not yet scheduled will delay construction notify ahead of time and be proactive in seeing that the Commissioning Authority has the scheduling information needed to efficiently execute the commissioning process.

E. Put all HVAC equipment and systems into operation and continue operation during each working day of testing, adjusting, and balancing and commissioning, as required.

F. Provide test holes in ducts and plenums where directed to allow air measurements and air balancing; close with an approved plug.

G. Provide temperature and pressure taps in accordance with the contract documents.

3.02 INSPECTING AND TESTING - GENERAL

A. Submit startup plans, startup reports, and Prefunctional Checklists for each item of equipment or other assembly to be commissioned.

B. Perform the Functional Tests directed by the Commissioning Authority for each item of equipment or other assembly to be commissioned.

C. Provide two-way radios for use during the testing.

D. Valve/Damper Stroke Setup and Check:
   1. For all valve/damper actuator positions checked, verify the actual position against the control system readout.
   2. Set pump/fan to normal operating mode.
   3. Command valve/damper closed; visually verify that valve/damper is closed and adjust output zero signal as required.
   4. Command valve/damper open; verify position is full open and adjust output signal as required.
   5. Command valve/damper to a few intermediate positions.
   6. If actual valve/damper position does not reasonably correspond, replace actuator or add pilot positioner (for pneumatics).

E. Isolation Valve or System Valve Leak Check: For valves not by coils.
   1. With full pressure in the system, command valve closed.
   2. Use an ultra-sonic flow meter to detect flow or leakage.

F. Deficiencies: Correct deficiencies and re-inspect or re-test, as applicable, at no extra cost to Red Clay Consolidated School District.

3.03 TAB COORDINATION

A. TAB: Testing, adjusting, and balancing of HVAC.

B. Coordinate commissioning schedule with TAB schedule.

C. Review the TAB plan to determine the capabilities of the control system toward completing TAB.

D. Provide all necessary unique instruments and instruct the TAB technicians in their use; such as handheld control system interface for setting terminal unit boxes, etc.

E. Have all required Prefunctional Checklists, calibrations, startup and component Functional Tests of the system completed and approved by the Commissioning Authority prior to starting TAB.

F. Provide a qualified control system technician to operate the controls to assist the TAB technicians or provide sufficient training for the TAB technicians to operate the system without assistance.

3.04 CONTROL SYSTEM FUNCTIONAL TESTING

A. Prefunctional Checklists for control system components will require a signed and dated certification that all system programming is complete as required to accomplish the requirements of the Contract Documents and the detailed Sequences of Operation documentation submittal.

B. Do not start Functional Testing until all controlled components have themselves been successfully Functionally Tested in accordance with the contract documents.

C. Using a skilled technician who is familiar with this building, execute the Functional Testing of the control system as required by the Commissioning Authority.

D. Functional Testing of the control system constitutes demonstration and trend logging of control points monitored by the control system.
   1. The scope of trend logging is partially specified; trend log up to 50 percent more points than specified at no extra cost to Red Clay Consolidated School District.

2. Perform all trend logging specified in Prefunctional Checklists and Functional Test procedures.

E. Functionally Test integral or stand-alone controls in conjunction with the Functional Tests of the equipment they are attached to, including any interlocks with other equipment or systems; further testing during control system Functional Test is not required unless specifically indicated below.

F. Demonstrate the following to the Commissioning Authority during testing of controlled equipment; coordinate with commissioning of equipment.
1. Setpoint changing features and functions.
2. Sensor calibrations.

G. Demonstrate to the Commissioning Authority:
1. That all specified functions and features are set up, debugged and fully operable.
2. That scheduling features are fully functional and setup, including holidays.
3. That all graphic screens and value readouts are completed.
4. Correct date and time setting in central computer.
5. That field panels read the same time as the central computer; sample 10 percent of field panels; if any of those fail, sample another 10 percent; if any of those fail test all remaining units at no extra cost to Red Clay Consolidated School District.
6. Functionality of field panels using local operator keypads and local ports (plug-ins) using portable computer/keypad; demonstrate 100 percent of panels and 10 percent of ports; if any ports fail, sample another 10 percent; if any of those fail, test all remaining units at no extra cost to Red Clay Consolidated School District.
7. Power failure and battery backup and power-up restart functions.
8. Global commands features.
9. Security and access codes.
10. Occupant over-rides (manual, telephone, key, keypad, etc.).
11. O&M schedules and alarms.
12. Occupancy sensors and controls.
13. All control strategies and sequences not tested during controlled equipment testing.

H. If the control system, integral control components, or related equipment do not respond to changing conditions and parameters appropriately as expected, as specified and according to acceptable operating practice, under any of the conditions, sequences, or modes tested, correct all systems, equipment, components, and software required at no additional cost to Red Clay Consolidated School District.

3.05 OPERATION AND MAINTENANCE MANUALS

A. See Section 01 78 00 for additional requirements.

B. Add design intent documentation furnished by Architect to manuals prior to submission to Red Clay Consolidated School District.

C. Submit manuals related to items that were commissioned to Commissioning Authority for review; make changes recommended by Commissioning Authority.

D. Commissioning Authority will add commissioning records to manuals after submission to Red Clay Consolidated School District.

3.06 DEMONSTRATION AND TRAINING

A. See Section 01 79 00 for additional requirements.

B. Demonstrate operation and maintenance of HVAC system to Red Clay Consolidated School

District' personnel; if during any demonstration, the system fails to perform in accordance with the information included in the O&M manual, stop demonstration, repair or adjust, and repeat demonstration. Demonstrations may be combined with training sessions if appropriate.

C. These demonstrations are in addition to, and not a substitute for, Prefunctional Checklists and demonstrations to the Commissioning Authority during Functional Testing.

D. Provide classroom and hands-on training of Red Clay Consolidated School District's designated personnel on operation and maintenance of the HVAC system, control system, and all equipment items indicated to be commissioned. Provide the following minimum durations of training:

E. TAB Review: Instruct Red Clay Consolidated School District's personnel for minimum ____ hours, after completion of TAB, on the following:
   1. Review final TAB report, explaining the layout and meanings of each data type.
   2. Discuss any outstanding deficient items in control, ducting or design that may affect the proper delivery of air or water.
   3. Identify and discuss any terminal units, duct runs, diffusers, coils, fans and pumps that are close to or are not meeting their design capacity.
   4. Discuss any temporary settings and steps to finalize them for any areas that are not finished.
   5. Other salient information that may be useful for facility operations, relative to TAB.

F. HVAC Control System Training: Perform training in at least three phases:
   1. Phase 1 - Basic Control System: Provide minimum of ____ hours of actual training on the control system itself. Upon completion of training, each attendee, using appropriate documentation, should be able to perform elementary operations and describe general hardware architecture and functionality of the system.
      a. This training may be held on-site or at the manufacturer's facility.
      b. If held off-site, the training may occur prior to final completion of the system installation.
      c. For off-site training, Contractor shall pay expenses of up to two attendees.
   2. Phase 2 - Integrating with HVAC Systems: Provide minimum of ____ hours of on-site, hands-on training after completion of Functional Testing. Include instruction on:
      a. The specific hardware configuration of installed systems in this facility and specific instruction for operating the installed system, including interfaces with other systems, if any.
      b. Security levels, alarms, system start-up, shut-down, power outage and restart routines, changing setpoints and alarms and other typical changed parameters, overrides, freeze protection, manual operation of equipment, optional control strategies that can be considered, energy savings strategies and set points that if changed will adversely affect energy consumption, energy accounting, procedures for obtaining vendor assistance, etc.
      c. Trend logging and monitoring features (values, change of state, totalization, etc.), including setting up, executing, downloading, viewing both tabular and graphically and printing trends; provide practice in setting up trend logging and monitoring during training session.
      d. Every display screen, allowing time for questions.
      e. Point database entry and modifications.
   3. Phase 3 - Post-Occupancy: Six months after occupancy conduct minimum of ____ hours of training. Tailor training session to questions and topics solicited beforehand from Red Clay Consolidated School District. Also be prepared to address topics brought up and answer questions concerning operation of the system.

G. Provide the services of manufacturer representatives to assist instructors where necessary.

H. Provide the services of the HVAC controls instructor at other training sessions, when requested, to discuss the interaction of the controls system as it relates to the equipment being discussed.

END OF SECTION

SECTION 23 09 13

INSTRUMENTATION AND CONTROL DEVICES FOR HVAC

PART 1 GENERAL

1.01 SECTION INCLUDES

A. Thermostats, Temperature Sensors.

B. Automatic dampers.

C. Damper operators.

D. Miscellaneous accessories.

1.02 RELATED REQUIREMENTS

A. Section 23 21 13 - Hydronic Piping: Installation of control valves, flow switches, temperature sensor sockets, gage taps.

B. Section 23 33 00 - Air Duct Accessories: Installation of automatic dampers.

C. Section 23 09 23 - Direct-Digital Control System for HVAC.

D. Section 23 09 93 - Sequence of Operations for HVAC Controls.

1.03 REFERENCE STANDARDS

A. AMCA 500-D - Laboratory Methods for Testing Dampers for Rating; Air Movement and Control Association International, Inc..

B. ASME B16.22 - Wrought Copper and Copper Alloy Solder Joint Pressure Fittings; The American Society of Mechanical Engineers.

C. ASTM B32 - Standard Specification for Solder Metal.

D. ASTM B88 - Standard Specification for Seamless Copper Water Tube.

E. ASTM D1693 - Standard Test Method for Environmental Stress-Cracking of Ethylene Plastics.

F. NEMA 250 - Enclosures for Electrical Equipment (1000 Volts Maximum); National Electrical Manufacturers Association.

G. NFPA 90A - Standard for the Installation of Air-Conditioning and Ventilation Systems; National Fire Protection Association.

1.04 SUBMITTALS

A. See Section 01 30 00 - Administrative Requirements, for submittal procedures.

B. Product Data: Provide description and engineering data for each control system component. Include sizing as requested. Provide data for each system component and software module.

C. Shop Drawings: Indicate complete operating data, system drawings, wiring diagrams, and written detailed operational description of sequences. Submit schedule of valves indicating size, flow, and pressure drop for each valve. For automatic dampers indicate arrangement, velocities, and static pressure drops for each system.

D. Manufacturer's Instructions: Provide for all manufactured components.

E. Project Record Documents: Record actual locations of control components, including panels, thermostats, and sensors. Accurately record actual location of control components, including panels, thermostats, and sensors.
   1. Revise shop drawings to reflect actual installation and operating sequences.

F. Operation and Maintenance Data: Include inspection period, cleaning methods, recommended cleaning materials, and calibration tolerances.

G. Warranty: Submit manufacturers warranty and ensure forms have been filled out in Red Clay Consolidated School District s name and registered with manufacturer.

H. Maintenance Materials: Furnish the following for Red Clay Consolidated School District's use in maintenance of project.
   1. See Section 01 60 00 - Product Requirements, for additional provisions.

1.05 QUALITY ASSURANCE

A. Designer Qualifications: Design system under direct supervision of a Professional Engineer experienced in design of this work and licensed in DE.

PART 2 PRODUCTS

2.01 EQUIPMENT - GENERAL

A. Products Requiring Electrical Connection: Listed and classified by Underwriters Laboratories Inc., as suitable for the purpose specified and indicated.

2.02 CONTROL VALVES

A. Globe Pattern:
   1. Up to 2 inches: Bronze body, bronze trim, rising stem, renewable composition disc, screwed ends with backseating capacity repackable under pressure.
      a. Product:
         1) Substitutions: See Section 01 60 00 - Product Requirements.
   2. Over 2 inches: Iron body, bronze trim, rising stem, plug-type disc, flanged ends, renewable seat and disc.
      a. Product:
         1) Substitutions: See Section 01 60 00 - Product Requirements.
   3. Hydronic Systems:
      a. Rate for service pressure of 125 psig at 250 degrees F.
      b. Replaceable plugs and seats of stainless steel.
      c. Size for 3 psig maximum pressure drop at design flow rate.
      d. Two way valves shall have equal percentage characteristics, three way valves linear characteristics. Size two way valve operators to close valves against pump shut off head.
   4. Steam Systems:
      a. Rate for service pressure of 125 psig at 250 degrees F.
      b. Replaceable plugs and seats of stainless steel. Pressure drop across any steam valve at maximum flow shall be as shown on the Drawings.
      c. Size for 10 psig inlet pressure and 5 psig pressure drop.
      d. Valves shall have modified linear characteristics.

B. Butterfly Pattern:
   1. Iron body, bronze disc, resilient replaceable seat for service to 180 degrees F wafer or lug ends, extended neck.
   2. Hydronic Systems:
      a. Rate for service pressure of 125 psig at 250 degrees F.

b. Size for 1 psig maximum pressure drop at design flow rate.

C. Electronic Actuators:
1. 24 V powered, 4-20 mA proportional signal electronic actuator for valves and dampers.
2. Actuators shall spring return to normal open position as indicated on freeze, fire, or temperature protection.
3. Select operator for full shut off at maximum pump differential pressure.

2.03 DAMPERS

A. Performance: Test in accordance with AMCA 500-D.

B. Frames: Galvanized steel, welded or riveted with corner reinforcement, minimum 12 gage.

C. Blades: Galvanized steel, maximum blade size 8 inches wide, 48 inches long, minimum 22 gage, attached to minimum 1/2 inch shafts with set screws.

D. Blade Seals: Synthetic elastomeric inflatable mechanically attached, field replaceable.

E. Jamb Seals: Spring stainless steel.

F. Shaft Bearings: Oil impregnated sintered bronze.

G. Linkage Bearings: Oil impregnated sintered bronze.

H. Leakage: Less than one percent based on approach velocity of 2000 ft/min and 4 inches wg.

I. Maximum Pressure Differential: 6 inches wg.

J. Temperature Limits: -40 to 200 degrees F.

2.04 DAMPER OPERATORS

A. General: Provide smooth proportional control with sufficient power for air velocities 20 percent greater than maximum design velocity and to provide tight seal against maximum system pressures. Provide spring return for two position control and for fail safe operation.
1. Provide sufficient number of operators to achieve unrestricted movement throughout damper range.
2. Provide one operator for maximum 36 sq ft damper section.

B. Electric Operators:
1. Spring return, adjustable stroke motor having oil immersed gear train, with auxiliary end switch.

2.05 INPUT/OUTPUT SENSORS

A. Temperature Sensors:
1. Sensor range shall provide a resolution of no worse than .4°F (unless noted otherwise).
2. Room temperature sensor shall be an element contained within a ventilated cover, suitable for wall mounting with digital output. Sensors located in mechanical areas, plenums, garages, gymnasiums, or designated institutional locations shall be a flat plate sensor with no possible adjustment or shall be provided with aestetically-pleasing lockable protective cover. Security screws shall be used in institutional settings as deemed necessary by the design engineer. ATC contractor shall coordinate requirements with the design engineer during the submittal process. Provide insulated base. Following sensing elements are acceptable:
a. Sensing element - Platinum RTD, Thermistor, or integrated circuit, +/- 0.8°F accuracy at calibration point.

b. Units shall be capable of +/- 2 degrees (F) adjustment by the occupant, with display showing current temperature and setpoint.

3. Single point duct temperature sensor shall consist of sensing element, junction box for wiring connections and gasket to prevent air leakage or vibration noise. Temperature range as required for resolution indicated in paragraph A. Sensor probe shall be 316 stainless steel.
   a. Sensing element - Platinum RTD, Thermistor, or integrated circuit, +/- 0.8°F accuracy at calibration point.
4. Averaging duct temperature sensor shall consist of an averaging element, junction box for wiring connections and gasket to prevent air leakage. Provide enough sensors to give one lineal foot of sensing element for each square foot of cooling coil face area. Temperature range as required for resolution indicated in paragraph A.
   a. Sensing element - Platinum RTD, Thermistor, or integrated circuit, +/- 0.8°F accuracy at calibration point.
5. Liquid immersion temperature sensor shall include stainless steel thermowell, sensor and connection head for wiring connections.
   a. Sensing element for chilled water applications - Platinum RTD, Thermistor, or integrated circuit, +/- 0.8°F accuracy at calibration point. Temperature range shall be as required for resolution indicated in paragraph A.
   b. Sensing element for non-chilled water applications - Platinum RTD, +/- 0.2°F accuracy at calibration point. Temperature range shall be as required for resolution of no worse than 0.1°F.

B. Equipment Operation Sensors:
   1. Status Inputs for Fans: Differential pressure switch with adjustable range of 0 to 5 inches wg.
   2. Status Inputs for Pumps: Differential pressure switch piped across pump with adjustable pressure differential range of 8 to 60 psi.
   3. Status Inputs for Electric Motors: Current sensing relay with current transformers, adjustable and set to 175 percent of rated motor current.

C. Damper Position Indication: Potentiometer mounted in enclosure with adjustable crank arm assembly connected to damper to transmit 0 - 100 percent damper travel.

D. Carbon Dioxide Level Sensors:
   1. Wall or duct-mounted as required by control sequence or plans.
   2. Demand-control ventilation sensor for measuring and transmitting CO2 levels ranging from 0-2,000 ppm.
   3. Single-beam, dual-wavelength design with five-year stability for calibration..
   4. Proportional output, 4-20 mA signal.

2.06 THERMOSTATS

A. Line Voltage Thermostats:
   1. Integral manual On/Off/Auto selector switch, single or two pole as required.
   2. Dead band: Maximum 2 degrees F.
   3. Cover: Locking with set point adjustment, with thermometer.
   4. Rating: Motor load.

B. Outdoor Reset Thermostat:
   1. Remote bulb or bimetal rod and tube type, proportioning action with adjustable throttling range, adjustable setpoint.
   2. Scale range: -10 to 70 degrees F.

C. Immersion Thermostat:

1. Remote bulb or bimetallic rod and tube type, proportional action with adjustable setpoint and adjustable throttling range.

D. Airstream Thermostats:
1. Remote bulb or bimetallic rod and tube type, proportional action with adjustable setpoint in middle of range and adjustable throttling range.
2. Averaging service remote bulb element: 7.5 feet.

E. Electric Low Limit Duct Thermostat:
1. Snap acting, single pole, single throw, manual reset switch that trips if temperature sensed across any 12 inches of bulb length is equal to or below setpoint,
2. Bulb length: Minimum 20 feet.
3. Provide one thermostat for every 20 sq ft of coil surface.

F. Electric High Limit Duct Thermostat:
1. Snap acting, single pole, single throw, manual reset switch that trips if temperature sensed across any 12 inches of bulb length is equal to or above setpoint,
2. Bulb length: Minimum 20 feet.
3. Provide one thermostat for every 20 sq ft of coil surface.

G. Fire Thermostats:
1. UL labeled, factory set in accordance with NFPA 90A.
2. Normally closed contacts, manual reset.

H. Heating/Cooling Valve Top Thermostats:
1. Proportional acting for proportional flow, molded rubber diaphragm, remote bulb liquid filled element, direct and reverse acting at differential pressure to 25 psig, cast housing with position indicator and adjusting knob.

2.07 TRANSMITTERS

A. Pressure Transmitters:
1. One pipe direct acting indicating type for gas, liquid, or steam service, range suitable for system, proportional electronic output.

B. Temperature Transmitters:
1. One pipe, directly proportional output signal to measured variable, linearity within plus or minus 1/2 percent of range for 200 degree F span and plus or minus 1 percent for 50 degree F span, with 50 degrees F temperature range, compensated bulb, averaging capillary, or rod and tube operation on 20 psig input pressure and 3 to 15 psig output.

PART 3 EXECUTION

3.01 EXAMINATION

A. Verify existing conditions before starting work.

B. Verify that systems are ready to receive work.

C. Beginning of installation means installer accepts existing conditions.

D. Sequence work to ensure installation of components is complementary to installation of similar components in other systems.

E. Coordinate installation of system components with installation of mechanical systems equipment such as air handling units and air terminal units.

F. Ensure installation of components is complementary to installation of similar components.

G. Coordinate installation of system components with installation of mechanical systems equipment such as air handling units and air terminal units.

3.02 INSTALLATION

A. Install in accordance with manufacturer's instructions.

B. Check and verify location of thermostats with plans and room details before installation. Locate 48 inches above floor. Align with lighting switches, CO2 sensors, and humidistats. Refer to Section 26 27 26.

C. Mount freeze protection thermostats using flanges and element holders.

D. Mount outdoor reset thermostats and outdoor sensors indoors, with sensing elements outdoors with sun shield.

E. Provide separable sockets for liquids and flanges for air bulb elements.

F. Provide thermostats in aspirating boxes in front entrances.

G. Provide guards on thermostats in entrances.

H. Provide valves with position indicators and with pilot positioners where sequenced with other controls.

I. Provide mixing dampers of opposed blade construction arranged to mix streams. Provide separate minimum outside air damper section adjacent to return air dampers with separate damper motor.

J. Provide isolation (two position) dampers of parallel blade construction.

K. Install damper motors on outside of duct in warm areas. Do not install motors in locations at outdoor temperatures.

L. Mount control panels adjacent to associated equipment on vibration free walls or free standing angle iron supports. One cabinet may accommodate more than one system in same equipment room. Provide engraved plastic nameplates for instruments and controls inside cabinet and engraved plastic nameplates on cabinet face.

M. Install "hand/off/auto" selector switches to override automatic interlock controls when switch is in "hand" position.

N. Provide conduit and electrical wiring in accordance with Section 26 27 17. Electrical material and installation shall be in accordance with appropriate requirements of Division 26.

3.03 MAINTENANCE

A. See Section 01 70 00 - Execution Requirements, for additional requirements relating to maintenance service.

B. Provide service and maintenance of control system for one year from Date of Substantial Completion.

END OF SECTION

SECTION 23 09 23

DIRECT-DIGITAL CONTROL SYSTEM FOR HVAC

-1.01 SECTION PROVIDED FOR REFERENCE ONLY. BUILDING AUTOMATION SYSTEM/CONTROLS PACKAGE PURCHASED UNDER SEPARATE CONTRACT.

PART 1 GENERAL

1.01 SECTION INCLUDES

A. System Description

B. Operator Interface

C. Controllers

D. Power Supplies and Line Filtering

E. System Software

F. Controller Software

G. HVAC Control Programs

H. Control equipment.

I. Software.

1.02 RELATED REQUIREMENTS

A. Section 28 31 00 - Fire Detection and Alarm.

B. Section 23 09 13 - Instrumentation and Control Devices for HVAC.

C. Section 23 09 93 - Sequence of Operations for HVAC Controls.

D. Section 26 27 17 - Equipment Wiring: Electrical characteristics and wiring connections.

E. Section 27 52 23.50 - Educational Intercommunications and Programs - Education For Sustainability Systems

1.03 REFERENCE STANDARDS

A. NFPA 70 - National Electrical Code; National Fire Protection Association.

1.04 SYSTEM DESCRIPTION

A. Automatic temperature control field monitoring and control system using field programmable micro-processor based units. No other vendors are acceptable.

B. Base system on distributed system of fully intelligent, stand-alone controllers, operating in a multi-tasking, multi-user environment on token passing network, with central and remote hardware, software, and interconnecting wire and conduit.

C. Include computer software and all hardware, operator input/output devices, control units, local area networks (LAN), sensors, control devices, actuators.

D. Controls for variable air volume terminals, radiation, reheat coils, unit heaters, fan coils, and the like when directly connected to the control units. Individual terminal unit control is specified in Section 23 09 13.

E. Provide control systems consisting of thermostats, control valves, dampers and operators, indicating devices, interface equipment, power transformers and electrical feeds, and other apparatus and accessories required to operate mechanical systems, and to perform functions specified.

F. Include installation and calibration, supervision, adjustments, and fine tuning necessary for complete and fully operational system.

1.05 SUBMITTALS

A. See Section 01 30 00 - Administrative Requirements, for submittal procedures.

B. Product Data: Provide data for each system component and software module.

C. Shop Drawings:
1. Indicate trunk cable schematic showing programmable control unit locations, and trunk data conductors.
2. List connected data points, including connected control unit and input device.
3. Indicate system graphics indicating monitored systems, data (connected and calculated) point addresses, and operator notations. Provide demonstration diskette containing graphics.
4. Show system configuration with peripheral devices, batteries, power supplies, diagrams, modems, and interconnections.
5. Indicate description and sequence of operation of operating, user, and application software.

D. Manufacturer's Instructions: Indicate manufacturer's installation instructions for all manufactured components.

E. Project Record Documents: Record actual locations of control components, including control units, thermostats, and sensors.
1. Revise shop drawings to reflect actual installation and operating sequences.
2. Include submittals data in final "Record Documents" form.

F. Operation and Maintenance Data:
1. Include interconnection wiring diagrams complete field installed systems with identified and numbered, system components and devices.
2. Include keyboard illustrations and step-by-step procedures indexed for each operator function.
3. Include inspection period, cleaning methods, cleaning materials recommended, and calibration tolerances.

G. Warranty: Submit manufacturer's warranty and ensure forms have been filled out in Red Clay Consolidated School District s name and registered with manufacturer.

1.06 QUALITY ASSURANCE

A. Perform work in accordance with NFPA 70.

B. Design system software under direct supervision of a Professional Engineer experienced in design of this Work and licensed at DE.

C. Manufacturer Qualifications: Company specializing in manufacturing the Products specified in this section with minimum 10 years documented experience.

D. Installer Qualifications: Company specializing in performing the work of this section 5 years documented experience approved by manufacturer.

E. Products Requiring Electrical Connection: Listed and classified by Underwriters Laboratories Inc., as suitable for the purpose specified and indicated.

1.07 PRE-INSTALLATION MEETING

A. Convene one week before starting work of this Section.

B. Require attendance of parties directly affecting the work of this Section.

1.08 WARRANTY

A. See Section 01 78 00 - Closeout Submittals, for additional warranty requirements.

B. Correct defective Work within a five year period after Substantial Completion.

C. Provide five year manufacturer's warranty for field programmable micro-processor based units.

1.09 MAINTENANCE SERVICE

A. Provide service and maintenance of energy management and control systems for one years from Date of Substantial Completion.

B. Provide four complete inspections per year, two in each season, to inspect, calibrate, and adjust controls as required, and submit written reports.

C. Provide complete service of systems, including call backs. Make minimum of 4 complete normal inspections of approximately 4 hours duration in addition to normal service calls to inspect, calibrate, and adjust controls, and submit written reports.

1.10 EXTRA MATERIALS

A. See Section 01 60 00 - Product Requirements, for additional provisions.

1.11 PROTECTION OF SOFTWARE RIGHTS

A. Prior to delivery of software, the Red Clay Consolidated School District and the party providing the software will enter into a software license agreement with provisions for the following:
   1. Limiting use of software to equipment provided under these specifications.
   2. Limiting copying.
   3. Preserving confidentiality.
   4. Prohibiting transfer to a third party.

PART 2 PRODUCTS

2.01 MANUFACTURERS

A. Trane

B. Substitutions: Not Permitted.

2.02 SYSTEM DESCRIPTION

A. Automatic temperature control field monitoring and control system using field programmable micro-processor based units with communications to Building Management System.

B. Base system on distributed system of fully intelligent, stand-alone controllers, operating in a multi-tasking, multi-user environment on token passing network, with central and remote hardware, software, and interconnecting wire and conduit.

C. Include computer software and hardware, operator input/output devices, control units, local area networks (LAN), sensors, control devices, actuators.

D. Controls for variable air volume terminals, radiation, reheat coils, unit heaters, fan coils, and the like when directly connected to the control units. Individual terminal unit control is specified in Section 23 09 13.

E. Provide control systems consisting of thermostats, control valves, dampers and operators, indicating devices, interface equipment and other apparatus and accessories required to operate mechanical systems, and to perform functions specified.

F. Include installation and calibration, supervision, adjustments, and fine tuning necessary for complete and fully operational system.

2.03 CONTROLLERS

A. BUILDING CONTROLLERS
1. General:
   a. Manage global strategies by one or more, independent, standalone, microprocessor based controllers.
   b. Provide sufficient memory to support controller's operating system, database, and programming requirements.
   c. Share data between networked controllers.
   d. Controller operating system manages input and output communication signals allowing distributed controllers to share real and virtual object information and allowing for central monitoring and alarms.
   e. Utilize real-time clock for scheduling.
   f. Continuously check processor status and memory circuits for abnormal operation.
   g. Controller to assume predetermined failure mode and generate alarm notification upon detection of abnormal operation.
   h. Communication with other network devices to be based on assigned protocol.
2. Communication:
   a. Controller to reside on a BACnet network using ISO 8802-3 (ETHERNET) Data Link/Physical layer protocol.
   b. Perform routing when connected to a network of custom application and application specific controllers.
   c. Provide required communication to District-wide BAS.
3. Anticipated Environmental Ambient Conditions:
   a. Outdoors and/or in Wet Ambient Conditions:
      1) Mount within waterproof enclosures.
      2) Rated for operation at 40 to 150 degrees F.
   b. Conditioned Space:
      1) Mount within dustproof enclosures.
      2) Rated for operation at 32 to 120 degrees F.
4. Provisions for Serviceability:
   a. Diagnostic LEDs for power, communication, and processor.
   b. Make all wiring connections to field removable, modular terminal strips, or to a termination card connected by a ribbon cable.
5. Memory: In the event of a power loss, maintain all BIOS and programming information for a minimum of 72 hours.
6. Power and Noise Immunity:
   a. Maintain operation at 90 to 110 percent of nominal voltage rating.
   b. Perform orderly shutdown below 80 percent of nominal voltage.

c. Operation protected against electrical noise of 5 to 120 Hz and from keyed radios up to 5 W. at 3 feet.

B. INPUT/OUTPUT INTERFACE

1. Hardwired inputs and outputs tie into the DDC system through building, custom application, or application specific controllers.
2. All Input/Output Points:
   a. Protect controller from damage resulting from any point short-circuiting or grounding and from voltage up to 24 volts of any duration.
   b. Provide universal type for building and custom application controllers where input or output is software designated as either binary or analog type with appropriate properties.
3. Binary Inputs:
   a. Allow monitoring of On/Off signals from remote devices.
   b. Provide wetting current of 12 mA minimum, compatible with commonly available control devices and protected against the effects of contact bounce and noise.
   c. Sense dry contact closure with power provided only by the controller.
4. Pulse Accumulation Input Objects: Conform to all requirements of binary input objects and accept up to 10 pulses per second.
5. Analog Inputs:
   a. Allow for monitoring of low voltage 0 to 10 VDC, 4 to 20 mA current, or resistance signals (thermistor, RTD).
   b. Compatible with and field configurable to commonly available sensing devices.
6. Binary Outputs:
   a. Used for On/Off operation or a pulsed low-voltage signal for pulse width modulation control.
   b. Outputs provided with three position (On/Off/Auto) override switches.
   c. Status lights for building and custom application controllers to be selectable for normally open or normally closed operation.
7. Analog Outputs:
   a. Monitoring signal provides a 0 to 10 VDC or a 4 to 20 mA output signal for end device control.
   b. Provide status lights and two position (AUTO/MANUAL) switch for building and custom application controllers with manually adjustable potentiometer for manual override on building and custom application controllers.
   c. Drift to not exceed 0.4 percent of range per year.
8. Tri State Outputs:
   a. Coordinate two binary outputs to control three point, floating type, electronic actuators without feedback.
   b. Limit the use of three point, floating devices to the following zone and terminal unit control applications:
   c. Control algorithms run the zone actuator to one end of its stroke once every 24 hours for verification of operator tracking.
9. System Object Capacity:
   a. System size to be expandable to twice the number of input output objects required by providing additional controllers, including associated devices and wiring.
   b. Hardware additions or software revisions for the installed operator interfaces are not to be required for future, system expansions.

2.04 POWER SUPPLIES AND LINE FILTERING

A. Power Supplies:
   1. Provide UL listed control transformers with Class 2 current limiting type or over-current protection in both primary and secondary circuits for Class 2 service as required by the NEC.
   2. Limit connected loads to 80 percent of rated capacity.
   3. Match DC power supply to current output and voltage requirements.
   4. Unit to be full wave rectifier type with output ripple of 5.0 mV maximum peak to peak.
   5. Regulation to be 1 percent combined line and load with 100 microsecond response time for 50 percent load changes.
   6. Provide over-voltage and over-current protection to withstand a 150 percent current overload for 3 seconds minimum without trip-out or failure.
   7. Operational Ambient Conditions: 32 to 120 degrees F.
   8. EM/RF meets FCC Class B and VDE 0871 for Class B and MIL-STD 810 for shock and vibration.
   9. Line voltage units UL recognized and CSA approved.

B. Power Line Filtering:
   1. Provide external or internal transient voltage and surge suppression component for all workstations and controllers.
   2. Minimum surge protection attributes:
      a. Dielectric strength of 1000 volts minimum.
      b. Response time of 10 nanoseconds or less.
      c. Transverse mode noise attenuation of 65 dB or greater.
      d. Common mode noise attenuation of 150 dB or greater at 40 to 100 Hz.

2.05 OPERATOR INTERFACE - DISTRICT WIDE

A. Work Station:
   1. Utilize existing workstations within the District for full access to the system.

B. System Support: Full LAN interface units (desktop, laptop, tablet, etc.) connected to multi-user, multi-tasking environment with concurrent capability to:
   1. Access DDC network.
   2. Access or control same control unit.
   3. Access or modify same control unit data base.
   4. Archive data, alarms, and network actions to hard disk regardless of what application programs are being currently executed.
   5. Develop and edit data base.
   6. Implement and tune DDC control.
   7. Develop graphics.
   8. Control facility.

2.06 CONTROL UNITS

A. Units: Modular in design and consisting of processor board with programmable RAM memory, local operator access and display panel, and integral interface equipment.

B. Battery Backup: For minimum of 48 hours for complete system including RAM without interruption, with automatic battery charger.

C. Control Units Functions:
   1. Monitor or control each input/output point.
   2. Completely independent with hardware clock/calendar and software to maintain control independently.

3. Acquire, process, and transfer information to operator station or other control units on network.
4. Accept, process, and execute commands from other control unit's or devices or operator stations.
5. Access both data base and control functions simultaneously.
6. Record, evaluate, and report changes of state or value that occur among associated points. Continue to perform associated control functions regardless of status of network.
7. Perform in stand-alone mode:
   a. Start/stop.
   b. Duty cycling.
   c. Automatic Temperature Control.
   d. Demand control via a sliding window, predictive algorithm.
   e. Event initiated control.
   f. Calculated point.
   g. Scanning and alarm processing.
   h. Full direct digital control.
   i. Trend logging.
   j. Global communications.
   k. Maintenance scheduling.

D. Global Communications:
1. Broadcast point data onto network, making that information available to all other system control units.
2. Transmit any or all input/output points onto network for use by other control units and utilize data from other control units.

E. Input/Output Capability:
1. Discrete/digital input (contact status).
2. Discrete/digital output.
3. Analog input.
4. Analog output.
5. Pulse input (5 pulses/second).
6. Pulse output (0-655 seconds in duration with 0.01 second resolution).

F. Monitor, control, or address data points. Mix shall include analog inputs, analog outputs, pulse inputs, pulse outputs and discrete inputs/outputs, as required. Install control unit's with minimum 30 percent spare capacity.

G. Point Scanning: Set scan or execution speed of each point to operator selected time from 1 to 250 seconds.

H. Upload/Download Capability: Download from or upload to operator station. Upload/Download time for entire control unit database maximum 10 seconds on hard wired LAN, or 60 seconds over voice grade phone lines.

I. Test Mode Operation: Place input/output points in test mode to allow testing and developing of control algorithms on line without disrupting field hardware and controlled environment. In test mode:
1. Inhibit scanning and calculation of input points. Issue manual control to input points (set analog or digital input point to operator determined test value) from work station.
2. Control output points but change only data base state or value; leave external field hardware unchanged.

3. Enable control actions on output points but change only data base state or value.

J. Local display and adjustment panel: Portable control unit, containing digital display, and numerical keyboard. Display and adjust:
1. Input/output point information and status.
2. Controller set points.
3. Controller tuning constants.
4. Program execution times.
5. High and low limit values.
6. Limit differential.
7. Set/display date and time.
8. Control outputs connected to the network.
9. Automatic control outputs.
10. Perform control unit diagnostic testing.
11. Points in "Test" mode.

2.07 LOCAL AREA NETWORK (LAN)

A. Provide communication between control units over local area network (LAN).

B. LAN Capacity: Not less than 100 stations or nodes.

C. Break in Communication Path: Alarm and automatically initiate LAN reconfiguration.

D. LAN Data Speed: Minimum 19.2 Kb.

E. Communication Techniques: Allow interface into network by multiple operation stations and by auto-answer/auto-dial modems. Support communication over telephone lines utilizing modems.

F. Transmission Median: Fiber optic or single pair of solid 24 gauge twisted, shielded copper cable.

G. Network Support: Time for global point to be received by any station, shall be less than 3 seconds. Provide automatic reconfiguration if any station is added or lost. If transmission cable is cut, reconfigure two sections with no disruption to system's operation, without operator intervention.

2.08 SYSTEM SOFTWARE

A. Operating System:
1. Concurrent, multi-tasking capability.
   a. Common Software Applications Supported: Microsoft Excel.
2. System Graphics:
   a. Allow up to 10 graphic screens, simultaneously displayed for comparison and monitoring of system status.
   b. Animation displayed by shifting image files based on object status.
   c. Provide method for operator with password to perform the following:
      1) Move between, change size, and change location of graphic displays.
      2) Modify on-line.
      3) Add, delete, or change dynamic objects consisting of:
         (a) Analog and binary values.
         (b) Dynamic text.
         (c) Static text.
         (d) Animation files.
3. Custom Graphics Generation Package:
   a. Create, modify, and save graphic files and visio format graphics in PCX formats.

b. HTML graphics to support web browser compatible formats.
c. Capture or convert graphics from AutoCAD.

4. Standard HVAC Graphics Library:
   a. HVAC Equipment:
   b. Ancillary Equipment:

B. Workstation System Applications:
1. Automatic System Database Save and Restore Functions:
   a. Current database copy of each Building Controller is automatically stored on hard disk.
   b. Automatic update occurs upon change in any system panel.
   c. In the event of database loss in any system panel, the first workstation to detect the loss automatically restores the database for that panel unless disabled by the operator.
2. Manual System Database Save and Restore Functions by Operator with Password Clearance:
   a. Save database from any system panel.
   b. Clear a panel database.
   c. Initiate a download of a specified database to any system panel.
3. Software provided allows system configuration and future changes or additions by operators under proper password protection.
4. On-line Help:
   a. Context-sensitive system assists operator in operation and editing.
   b. Available for all applications.
   c. Relevant screen data provided for particular screen display.
   d. Additional help available via hypertext.
5. Security:
   a. Operator log-on requires user name and password to view, edit, add, or delete data.
   b. System security selectable for each operator.
   c. System supervisor sets passwords and security levels for all other operators.
   d. Operator passwords to restrict functions accessible to viewing and/or changing system applications, editor, and object.
   e. Automatic, operator log-off results from keyboard or mouse inactivity during user-adjustable, time period.
   f. All system security data stored in encrypted format.
6. System Diagnostics:
   a. Operations Automatically Monitored:
      1) Workstations.
      2) Printers.
      3) Modems.
      4) Network connections.
      5) Building management panels.
      6) Controllers.
   b. Device failure is annunciated to the operator.
7. Alarm Processing:
   a. All system objects are configurable to "alarm in" and "alarm out" of normal state.
   b. Configurable Objects:
      1) Alarm limits.
      2) Alarm limit differentials.
      3) States.
      4) Reactions for each object.
8. Alarm Messages:
   a. Descriptor: English language.

b. Recognizable Features:
   1) Source.
   2) Location.
   3) Nature.
9. Configurable Alarm Reactions by Workstation and Time of Day:
   a. Logging.
   b. Printing.
   c. Starting programs.
   d. Displaying messages.
   e. Dialing out to remote locations.
   f. Paging.
   g. Providing audible annunciation.
   h. Displaying specific system graphics.
10. Custom Trend Logs:
   a. Definable for any data object in the system including interval, start time, and stop time.
   b. Trend Data:
      1) Sampled and stored on the building controller panel.
      2) Archivable on hard disk.
      3) Retrievable for use in reports, spreadsheets and standard database programs.
      4) Archival on LAN accessible storage media including hard disk, tape, Raid array drive, and virtual cloud environment.
      5) Protected and encrypted format to prevent manipulation, or editing of historical data and event logs.
11. Alarm and Event Log:
   a. View all system alarms and change of states from any system location.
   b. Events listed chronologically.
   c. Operator with proper security acknowledges and clears alarms.
   d. Alarms not cleared by operator are archived to the workstation hard disk.
12. Object, Property Status and Control:
   a. Provide a method to view, edit if applicable, the status of any object and property in the system.
   b. Status Available by the Following Methods:
      1) Menu.
      2) Graphics.
      3) Custom Programs.
13. Reports and Logs:
   a. Reporting Package:
      1) Allows operator to select, modify, or create reports.
      2) Definable as to data content, format, interval, and date.
      3) Archivable to hard disk.
   b. Real-time logs available by type or status such as alarm, lockout, normal, etc.
   c. Stored on hard disk and readily accessible by standard software applications, including spreadsheets and word processing.
   d. Set to be printed on operator command or specific time(s).
14. Reports:
   a. Standard:
      1) Objects with current values.
      2) Current alarms not locked out.
      3) Disabled and overridden objects, points and SNVTs.
      4) Objects in manual or automatic alarm lockout.
      5) Objects in alarm lockout currently in alarm.

6) Logs:
   (a) Alarm History.
   (b) System messages.
   (c) System events.
   (d) Trends.

b. Custom:
   1) Daily.
   2) Weekly.
   3) Monthly.
   4) Annual.
   5) Time and date stamped.
   6) Title.
   7) Facility name.

c. Tenant Override:
   1) Monthly report showing total, requested, after-hours HVAC and lighting services on a daily basis for each tenant.
   2) Annual report showing override usage on a monthly basis.

d. Electrical, Fuel, and Weather:
   1) Electrical Meter(s):
      (a) Monthly showing daily electrical consumption and peak electrical demand with time and date stamp for each meter.
      (b) Annual summary showing monthly electrical consumption and peak demand with time and date stamp for each meter.
   2) Fuel Meter(s):
      (a) Monthly showing daily natural gas consumption for each meter.
      (b) Annual summary showing monthly consumption for each meter.
   3) Weather:
      (a) Monthly showing minimum, maximum, average outdoor air temperature and heating/cooling degree-days for the month.

C. Workstation Applications Editors:
   1. Provide editing software for all system applications at the PC workstation.
   2. Downloaded application is executed at controller panel.
   3. Full screen editor for each application allows operator to view and change:
      a. Configuration.
      b. Name.
      c. Control parameters.
      d. Set-points.
   4. Scheduling:
      a. Monthly calendar indicates schedules, holidays, and exceptions.
      b. Allows several related objects to be scheduled and copied to other objects or dates.
      c. Start and stop times adjustable from master schedule.
   5. Custom Application Programming:
      a. Create, modify, debug, edit, compile, and download custom application programming during operation and without disruption of all other system applications.
      b. Programming Features:
         1) English oriented language, based on BASIC, FORTRAN, C, or PASCAL syntax allowing for free form programming.
         2) Alternative language graphically based using appropriate function blocks suitable for all required functions and amenable to customizing or compounding.
         3) Insert, add, modify, and delete custom programming code that incorporates word

processing features such as cut/paste and find/replace.

4) Allows the development of independently, executing, program modules designed to enable and disable other modules.
5) Debugging/simulation capability that displays intermediate values and/or results including syntax/execution error messages.
6) Support for conditional statements (IF/THEN/ELSE/ELSE-F) using compound Boolean (AND, OR, and NOT) and/or relations (EQUAL, LESS THAN, GREATER THAN, NOT EQUAL) comparisons.
7) Support for floating-point arithmetic utilizing plus, minus, divide, times, square root operators; including absolute value; minimum/maximum value from a list of values for mathematical functions.
8) Language consisting of resettable, predefined, variables representing time of day, day of the week, month of the year, date; and elapsed time in seconds, minutes, hours, and days where the variable values cab be used in IF/THEN comparisons, calculations, programming statement logic, etc.
9) Language having predefined variables representing status and results of the system software enables, disables, and changes the set points of the controller software.

2.09 CONTROLLER SOFTWARE

A. All applications reside and operate in the system controllers and editing of all applications occurs at the operator workstation.

B. System Security:
   1. User access secured via user passwords and user names.
   2. Passwords restrict user to the objects, applications, and system functions as assigned by the system manager.
   3. User Log On/Log Off attempts are recorded.
   4. Automatic Log Off occurs following the last keystroke after a user defined delay time.

C. Object or Object Group Scheduling:
   1. Weekly Schedules Based on Separate, Daily Schedules:
      a. Include start, stop, optimal stop, and night economizer.
      b. 10 events maximum per schedule.
      c. Start/stop times adjustable for each group object.

D. Provide standard application for equipment coordination and grouping based on function and location to be used for scheduling and other applications.

E. Alarms:
   1. Binary object is set to alarm based on the operator specified state.
   2. Analog object to have high/low alarm limits.
   3. All alarming is capable of being automatically and manually disabled.
   4. Alarm Reporting:
      a. Operator determines action to be taken for alarm event.
      b. Alarms to be routed to appropriate workstation.
      c. Reporting Options:

F. Maintenance Management: System monitors equipment status and generates maintenance messages based upon user-designated run-time limits.

G. Sequencing: Application software based upon specified sequences of operation in Section 23 09 93.

H. PID Control Characteristics:
   1. Direct or reverse action.
   2. Anti-windup.
   3. Calculated, time-varying, analog value, positions an output or stages a series of outputs.
   4. User selectable controlled variable, set-point, and PED gains.

I. Staggered Start Application:
   1. Prevents all controlled equipment from simultaneously restarting after power outage.
   2. Order of equipment startup is user selectable.

J. Energy Calculations:
   1. Accumulated instantaneous power or flow rates are converted to energy use data.
   2. Algorithm calculates a rolling average and allows window of time to be user specified in minute intervals.
   3. Algorithm calculates a fixed window average with a digital input signal from a utility meter defining the start of the window period that in turn synchronizes the fixed-window average with that used by the power company.

K. Anti-Short Cycling:
   1. All binary output objects protected from short-cycling.
   2. Allows minimum on-time and off-time to be selected.

L. On-Off Control with Differential:
   1. Algorithm allows binary output to be cycled based on a controlled variable and set-point.
   2. Algorithm to be direct-acting or reverse-acting incorporating an adjustable differential.

M. Run-Time Totalization:
   1. Totalize run-times for all binary input objects.
   2. Provides operator with capability to assign high run-time alarm.

2.10 OPERATING SYSTEM SOFTWARE

A. Input/Output Capability From Operator Station:
   1. Request display of current values or status in tabular or graphic format.
   2. Command selected equipment to specified state.
   3. Initiate logs and reports.
   4. Change analog limits.
   5. Add, delete, or change points within each control unit or application routine.
   6. Change point input/output descriptors, status, alarm descriptors, and engineering unit descriptors.
   7. Add new control units to system.
   8. Modify and set up maintenance scheduling parameters.
   9. Develop, modify, delete or display full range of color graphic displays.
   10. Automatically archive select data even when running third party software.
   11. Provide capability to sort and extract data from archived files and to generate custom reports.
   12. Support two printer operations.
      a. Alarm printer: Print alarms, operator acknowledgements, action messages, system alarms, operator sign-on and sign-off.
      b. Data printer: Print reports, page prints, and data base prints.
   13. Select daily, weekly or monthly as scheduled frequency to synchronize time and date in digital control units. Accommodate daylight savings time adjustments.
   14. Print selected control unit data base.

B. Operator System Access: Via software password with minimum 30 access levels at work station and minimum 3 access levels at each control unit.

C. Data Base Creation and Support: Changes shall utilize standard procedures. Control unit shall automatically check work station data base files upon connection and verify data base match. Minimum capability shall include:
   1. Add and delete points.
   2. Modify any point parameter.
   3. Change, add, or delete English language descriptors.
   4. Add, modify, or delete alarm limits.
   5. Add, modify, or delete points in start/stop programs, trend logs, etc.
   6. Create custom relationship between points.
   7. Create or modify DDC loops and parameters.
   8. Create or modify override parameters.
   9. Add, modify, and delete any applications program.
   10. Add, delete, develop, or modify dynamic color graphic displays.

D. Dynamic Color Graphic Displays:
   1. Utilizes custom symbols or system supported library of symbols.
   2. Sixteen (16) colors.
   3. Sixty (60) outputs of real time, live dynamic data per graphic.
   4. Dynamic graphic data.
   5. 1,000 separate graphic pages.
   6. Modify graphic screen refresh rate between 1 and 60 seconds.

E. Operator Station:
   1. Accept data from LAN as needed without scanning entire network for updated point data.
   2. Interrogate LAN for updated point data when requested.
   3. Allow operator command of devices.
   4. Allow operator to place specific control units in or out of service.
   5. Allow parameter editing of control units.
   6. Store duplicate data base for every control unit and allow down loading while system is on line.
   7. Control or modify specific programs.
   8. Develop, store and modify dynamic color graphics.
   9. Provide data archiving of assigned points and support overlay graphing of this data utilizing up to four (4) variables.

F. Alarm Processing:
   1. Off normal condition: Cause alarm and appropriate message, including time, system, point descriptor, and alarm condition. Select alarm state/value and which alarms shall cause automatic dial-out.
   2. Critical alarm or change-of-state: Display message, stored on disk for review and sort, or print.
   3. Print on line changeable message, up to 100 characters in length, for each alarm point specified.
   4. Display alarm reports on video. Display multiple alarms in order of occurrence.
   5. Define time delay for equipment start-up or shutdown.
   6. Allow unique routing of specific alarms.
   7. Operator specifies if alarm requires acknowledgement.
   8. Continue to indicate unacknowledged alarms after return to normal.

9. Alarm notification:
    a. Automatic print.
    b. Display indicating alarm condition.
    c. Selectable audible alarm indication.

G. Event Processing: Automatically initiate commands, user defined messages, take specific control actions or change control strategy and application programs resulting from event condition. Event condition may be value crossing operator defined limit, change-of-state, specified state, or alarm occurrence or return to normal.

H. Automatic Restart: Automatically restart field equipment on restoration of power. Provide time delay between individual equipment restart and time of day start/stop.

I. Messages:
1. Automatically display or print user-defined message subsequent to occurrence of selected events.
2. Compose, change, or delete any message.
3. Display or log any message at any time.
4. Assign any message to any event.

J. Reports:
1. Manually requested with time and date.
2. Long term data archiving to hard disk.
3. Automatic directives to download to transportable media such as floppy diskettes for storage.
4. Data selection methods to include data base search and manipulation.
5. Data extraction with mathematical manipulation.
6. Data reports shall allow development of XY curve plotting, tabular reports (both statistical and summary), and multi-point timed based plots with not less than four (4) variables displayed.
7. Generating reports either normally at operator direction, or automatically under work station direction.
8. Reports may either manually displayed or printed, or may be printed automatically on daily, weekly, monthly, yearly or scheduled basis.
9. Include capability for statistical data manipulation and extraction.
10. Provide capability to generate four types of reports: Statistical detail reports, summary reports, trend graphic plots, x-y graphic plots.

K. Parameter Save/Restore: Store most current operating system, parameter changes, and modifications on disk or diskette.

L. Data Collection:
1. Automatically collect and store in disk files.
2. Daily electrical energy consumption, peak demand, and time of peak demand for up to electrical meters over 2 year period.
3. Daily consumption for up to 30 meters over a 2 year period.
4. Daily billable electrical energy consumption and time for up to 1024 zones over a 10 year period.
5. Provide archiving of stored data for use with system supplied custom reports.

M. Graphic Display: Support graphic development on work station with software features:
1. Page linking.
2. Generate, store, and retrieve library symbols.
3. Single or double height characters.

4. Sixty (60) dynamic points of data per graphic page.
5. Pixel level resolution.
6. Animated graphics for discrete points.
7. Analog bar graphs.
8. Display real time value of each input or output line diagram fashion.

N. Maintenance Management:
1. Run time monitoring, per point.
2. Maintenance scheduling targets with automatic annunciation, scheduling and shutdown.
3. Equipment safety targets.
4. Display of maintenance material and estimated labor.
5. Target point reset, per point.

O. Advisories:
1. Summary which contains status of points in locked out condition.
2. Continuous operational or not operational report of interrogation of system hardware and programmable control units for failure.
3. Report of power failure detection, time and date.
4. Report of communication failure with operator device, field interface unit, point, programmable control unit.

2.11 LOAD CONTROL PROGRAMS

A. General: Support inch-pounds and SI (metric) units of measurement.

B. Demand Limiting:
1. Monitor total power consumption per power meter and shed associated loads automatically to reduce power consumption to an operator set maximum demand level.
2. Input: Pulse count from incoming power meter connected to pulse accumulator in control unit.
3. Forecast demand (kW): Predicted by sliding window method.
4. Automatically shed loads throughout the demand interval selecting loads with independently adjustable on and off time of between one and 255 minutes.
5. Demand Target: Minimum of 3 per demand meter; change targets based upon (1) time, (2) status of pre-selected points, or (3) temperature.
6. Load: Assign load shed priority, minimum "ON" time and maximum "OFF" time.
7. Limits: Include control band (upper and lower limits).
8. Output advisory if loads are not available to satisfy required shed amount, advise shed requirements and requiring operator acknowledgement.

C. Duty Cycling:
1. Periodically stop and start loads, based on space temperature, and according to various On/Off patterns.
2. Modify off portion of cycle based on operator specified comfort parameters. Maintain total cycle time by increasing on portion of cycle by same amount that off portion is reduced.
3. Set and modify following parameters for each individual load.
   a. Minimum and maximum Off time.
   b. On/Off time in one minute increments.
   c. Time period from beginning of interval until load can be cycled.
   d. Manually override the DCC program and place a load in an On or Off state.
   e. Cooling Target Temperature and Differential.
   f. Heating Target Temperature and Differential.
   g. Cycle off adjustment.

D. Automatic Time Scheduling:
   1. Self-contained programs for automatic start/stop/scheduling of building loads.
   2. Support up to seven (7) normal day schedules, seven (7) "special day" schedules and two (2) temporary day schedules.
   3. Special days schedule shall support up to 30 unique date/duration combinations.
   4. Any number of loads assigned to any time program; each load can have individual time program.
   5. Each load assigned at least 16 control actions per day with 1 minute resolution.
   6. Time schedule operations may be:
      a. Start.
      b. Optimized Start.
      c. Stop.
      d. Optimized Stop.
      e. Cycle.
      f. Optimized Cycle.
   7. Minimum of 30 holiday periods up to 100 days in length may be specified for the year.
   8. Create temporary schedules.
   9. Broadcast temporary "special day" date and duration.

E. Start/Stop Time Optimization:
   1. Perform optimized start/stop as function of outside conditions, inside conditions, or both.
   2. Adaptive and self-tuning, adjusting to changing conditions unattended.
   3. For each point under control, establish and modify:
      a. Occupancy period.
      b. Desired temperature at beginning of occupancy period.
      c. Desired temperature at end of occupancy period.

F. Night Setback/Setup Program: Reduce heating space temperature setpoint or raise cooling space temperature setpoint during unoccupied hours; in conjunction with scheduled start/stop and optimum start/stop programs.

G. Calculated Points: Define calculations and totalization computed from monitored points (analog/digital points), constants, or other calculated points.
   1. Employ arithmetic, algebraic, Boolean, and special function operations.
   2. Treat calculated values like any other analog value, use for any function that a "hard wired point" might be used.

H. Event Initiated Programming: Event may be initiated by any data point, causing series of controls in a sequence.
   1. Define time interval between each control action between 0 to 3600 seconds.
   2. Output may be analog value.
   3. Provide for "skip" logic.
   4. Verify completion of one action before proceeding to next. If not verified, program shall be able to skip to next action.

I. Direct Digital Control: Each control unit shall provide Direct Digital Control software so that the operator may customize control strategies and sequences of operation by defining the appropriate control loop algorithms and choosing the optimum loop parameters.
   1. Control loops: Defined using "modules" that are analogous to standard control devices.
   2. Output: Paired or individual digital outputs for pulse-width modulation, and analog outputs, as required.
   3. Firmware:
      a. PID with analog or pulse-width modulation output.

b. Floating control with pulse-width modulated outputs.
c. Two-position control.
d. Primary and secondary reset schedule selector.
e. Hi/Lo signal selector.
f. Single pole double throw relay.
g. Single pole double throw time delay relay with delay before break, delay before make and interval time capabilities.

4. Direct Digital Control loops: Downloaded upon creation or on operator request. On sensor failure, program shall execute user defined failsafe output.
5. Display: Value or state of each of the lines which interconnect DDC modules.

J. Fine Tuning Direct Digital Control PID or floating loops:
1. Display information:
a. Control loop being tuned
b. Input (process) variable
c. Output (control) variable
d. Setpoint of loop
e. Proportional band
f. Integral (reset) Interval
g. Derivative (rate) Interval
2. Display format: Graphic, with automatic scaling; with input and output variable superimposed on graph of "time" vs "variable".

K. Trend logging:
1. Each control unit will store samples of control unit's data points.
2. Update file continuously at discretely assignable intervals.
3. Automatically initiate upload request and then store data on hard disk.
4. Time synchronize sampling at operator specified times and intervals with sample resolution of one minute.
5. Co-ordinate sampling with on/off state of specified point.
6. Display trend samples on work station in graphic format. Automatically scale trend graph with minimum 60 samples of data in plot of time vs data.

2.12 HVAC CONTROL PROGRAMS

A. General:
1. Support Inch-pounds and SI (metric) units of measurement.
2. Identify each HVAC Control system.

B. Optimal Run Time:
1. Control start-up and shutdown times of HVAC equipment for both heating and cooling.
2. Base on occupancy schedules, outside air temperature, seasonal requirements, and interior room mass temperature.
3. Start-up systems by using outside air temperature, room mass temperatures, and adaptive model prediction for how long building takes to warm up or cool down under different conditions.
4. Use outside air temperature to determine early shut down with ventilation override.
5. Analyze multiple building mass sensors to determine seasonal mode and worse case condition for each day.
6. Operator commands:
a. Define term schedule
b. Add/delete fan status point.
c. Add/delete outside air temperature point.

d. Add/delete mass temperature point.
e. Define heating/cooling parameters.
f. Define mass sensor heating/cooling parameters.
g. Lock/unlock program.
h. Request optimal run time control summary.
i. Request optimal run time mass temperature summary.
j. Request HVAC point summary.
k. Request HVAC saving profile summary.

7. Control Summary:
   a. HVAC Control system begin/end status.
   b. Optimal run time lock/unlock control status.
   c. Heating/cooling mode status.
   d. Optimal run time schedule.
   e. Start/Stop times.
   f. Selected mass temperature point ID.
   g. Optimal run time system normal start times.
   h. Occupancy and vacancy times.
   i. Optimal run time system heating/cooling mode parameters.
8. Mass temperature summary:
   a. Mass temperature point type and ID.
   b. Desired and current mass temperature values.
   c. Calculated warm-up/cool-down time for each mass temperature.
   d. Heating/cooling season limits.
   e. Break point temperature for cooling mode analysis.
9. HVAC point summary:
   a. Control system identifier and status.
   b. Point ID and status.
   c. Outside air temperature point ID and status.
   d. Mass temperature point ID and point.
   e. Calculated optimal start and stop times.
   f. Period start.

C. Supply Air Reset:
1. Monitor heating and cooling loads in building spaces, terminal reheat systems, both hot deck and cold deck temperatures on dual duct and multizone systems, single zone unit discharge temperatures.
2. Adjust discharge temperatures to most energy efficient levels satisfying measured load by:
   a. Raising cooling temperatures to highest possible value.
   b. Reducing heating temperatures to lowest possible level.
3. Operator commands:
   a. Add/delete fan status point.
   b. Lock/unlock program.
   c. Request HVAC point summary.
   d. Add/Delete discharge controller point.
   e. Define discharge controller parameters.
   f. Add/delete air flow rate.
   g. Define space load and load parameters.
   h. Request space load summary.
4. Control summary:
   a. HVAC control system status (begin/end).
   b. Supply air reset system status.

c. Optimal run time system status.
d. Heating and cooling loop.
e. High/low limits.
f. Deadband.
g. Response timer.
h. Reset times.

5. Space load summary:
   a. HVAC system status.
   b. Optimal run time status.
   c. Heating/cooling loop status.
   d. Space load point ID.
   e. Current space load point value.
   f. Control heat/cool limited.
   g. Gain factor.
   h. Calculated reset values.
   i. Fan status point ID and status.
   j. Control discharge temperature point ID and status.
   k. Space load point ID and status.
   l. Air flow rate point ID and status.

D. Enthalpy Switchover:
1. Calculate outside and return air enthalpy using measured temperature and relative humidity; determine energy expended and control outside and return air dampers.
2. Operator commands:
   a. Add/delete fan status point.
   b. Add/delete outside air temperature point.
   c. Add/delete discharge controller point.
   d. Define discharge controller parameters.
   e. Add/delete return air temperature point.
   f. Add/delete outside air dew point/humidity point.
   g. Add/delete return air dew point/humidity point.
   h. Add/delete damper switch.
   i. Add/delete minimum outside air.
   j. Add/delete atmospheric pressure.
   k. Add/delete heating override switch.
   l. Add/delete evaporative cooling switch.
   m. Add/delete air flow rate.
   n. Define enthalpy deadband.
   o. Lock/unlock program.
   p. Request control summary.
   q. Request HVAC point summary.
3. Control summary:
   a. HVAC control system begin/end status.
   b. Enthalpy switchover optimal system status.
   c. Optimal return time system status.
   d. Current outside air enthalpy.
   e. Calculated mixed air enthalpy.
   f. Calculated cooling cool enthalpy using outside air.
   g. Calculated cooling cool enthalpy using mixed air.
   h. Calculated enthalpy difference.
   i. Enthalpy switchover deadband.

j. Status of damper mode switch.

2.13 PROGRAMMING APPLICATION FEATURES

A. Trend Point:
   1. Sample up to 150 points, real or computed, with each point capable of collecting 100 samples at intervals specified in minutes, hours, days, or month.
   2. Output trend logs as line graphs or bar graphs. Output graphic on terminal, with each point for line and bar graphs designated with a unique pattern, vertical scale either actual values or percent of range, and horizontal scale time base. Print trend logs up to 12 columns of one point/column.

B. Alarm Messages:
   1. Allow definition of minimum of 100 messages, each having minimum length of 100 characters for each individual message.
   2. Assign alarm messages to system messages including point's alarm condition, point's off-normal condition, totalized point's warning limit, hardware elements advisories.
   3. Output assigned alarm with "message requiring acknowledgement".
   4. Operator commands include define, modify, or delete; output summary listing current alarms and assignments; output summary defining assigned points.

C. Weekly Scheduling:
   1. Automatically initiate equipment or system commands, based on preselected time schedule for points specified.
   2. Provide program times for each day of week, per point, with one minute resolution.
   3. Automatically generate alarm output for points not responding to command.
   4. Provide for holidays, minimum of 366 consecutive holidays.
   5. Operator commands:
      a. System logs and summaries.
      b. Start of stop point.
      c. Lock or unlock control or alarm input.
      d. Add, delete, or modify analog limits and differentials.
      e. Adjust point operation position.
      f. Change point operational mode.
      g. Open or close point.
      h. Enable/disable, lock/unlock, or execute interlock sequence or computation profile.
      i. Begin or end point totalization.
      j. Modify totalization values and limits.
      k. Access or secure point.
      l. Begin or end HVAC or load control system.
      m. Modify load parameter.
      n. Modify demand limiting and duty cycle targets.
   6. Output summary: Listing of programmed function points, associated program times, and respective day of week programmed points by software groups or time of day.

D. Interlocking:
   1. Permit events to occur, based on changing condition of one or more associated master points.
   2. Binary contact, high/low limit of analog point or computed point shall be capable of being utilized as master. Same master may monitor or command multiple slaves.
   3. Operator commands:
      a. Define single master/multiple master interlock process.
      b. Define logic interlock process.

c. Lock/unlock program.
d. Enable/disable interlock process.
e. Execute terminate interlock process.
f. Request interlock type summary.

PART 3 EXECUTION

3.01 EXAMINATION

A. Verify existing conditions before starting work.

B. Verify that conditioned power supply is available to the control units and to the operator work station. Verify that field end devices, wiring, and pneumatic tubing is installed prior to installation proceeding.

3.02 INSTALLATION

A. Install control units and other hardware in position on permanent walls where not subject to excessive vibration.

B. Install software in control units and in operator work station. Implement all features of programs to specified requirements and appropriate to sequence of operation. Refer to Section 23 09 93.

C. Provide with 120v AC, 15 amp dedicated emergency power circuit to each programmable control unit.

D. Provide conduit and electrical wiring in accordance with Section 26 27 17. Electrical material and installation shall be in accordance with appropriate requirements of Division 26.

E. Ensure that all components necessary to execute the sequences of operation are coordinated and installed by all contractors.

F. Contractor shall demolish and remove all existing control components, including but not limited to thermostats, pneumatic tabing, compressors, panels, and devices unless otherwise noted on the drawings. Demolition shall be coordinated on phased projects to maintain the existing system where needed until complete charge-over has been accomplished.

3.03 MANUFACTURER'SFIELD SERVICES

A. Start and commission systems. Allow sufficient time for start-up and commissioning prior to placing control systems in permanent operation.

B. Provide service engineer to instruct Red Clay Consolidated School District's representative in operation of systems plant and equipment for 2 day period.

C. Provide basic operator training for 4 persons on data display, alarm and status descriptors, requesting data, execution of commands and request of logs. Include a minimum of 8 hours dedicated instructor time. Provide training on site.

3.04 DEMONSTRATION AND INSTRUCTIONS

A. Demonstrate complete and operating system to Red Clay Consolidated School District.

3.05 SCHEDULES

A. Input/Output Schedule:
1. Point Description:
2. Digital Input:
a. Demand Meter (kW):

b. Auxiliary Contact:
c. Switches:
1) Switch Closing:
2) Flow Switch:
3) Optical:
d. Current:
e. Pressure:
3. Digital Output:
a. Control Relay:
b. Solenoid:
c. Contactor:
4. Analog Input:
a. Temperature:
b. Relative Humidity:
c. Pressure/Vacuum:
d. Filter:
e. Flow:
f. Current:
g. Liquid Level:
h. Photocell:
5. Analog Output:
a. Pneumatic Transducer:
b. 4-20 ma Module:
c. 0-16 v DC:
6. Alarm:

B. Input/Output Schedule:
1. Point Description:
2. Inputs:
a. Temperature:
b. Relative Humidity:
c. Pressure:
d. Flow:
e. Level:
f. Position:
g. Energy:
h. Power:
3. Outputs:
a. Status:
b. Alarm:
c. Pneumatic Position:
d. Electronic Position:
e. Set Point Adjust:
f. Start/Stop:
g. Off/Low/High:
4. Software Features:
a. PID Control (DDC):
b. High Limit:
c. Low Limit:
d. Run Time Totalization:
e. Consumption Totalization:

f. Program Start/Stop:
g. Load Shed:
h. Duty Cycle:
i. Enthalpy Switchover:
j. Optimal Run Time:
k. Supply Air Reset:
l. O.A. Interlock:
m. O.A. Temperature Reset:
n. Free Cooling Mode:
o. Warm-up Mode:
p. Boiler Interlock:
q. Chiller Sequencing:
r. Energy Calculation:

C. Alarm Schedule:
1. High Limit: A1.
2. Low Limit: A2.
3. Run Time: A3.
4. Maintenance: A4.
5. Status: A5.
6. Override: A6.
7. Freeze: A7.
8. Low Pressure: A8.

END OF SECTION

SECTION 23 09 93

SEQUENCE OF OPERATIONS FOR HVAC CONTROLS

BUILDING AUTOMATION SYSTEM/CONTROLS PACKAGE UNDER AN INDEPENDENT CONTRACT: CONTROLS CONTRACTOR SHALL PROVIDE ALL EQUIPMENT, CONTROLLERS, WIRING, LABOR, AND SOFTWARE REQUIRED TO INTEGRATE THE VARIABLE REFRIGERANT FLOW HVAC SYSTEM INTO THE B.A.S., AS WELL AS PROVIDE CONTROLS FOR THE ENERGY RECOVERY VENTILAOTRS (ERV), PACKAGED ROOF-TOP MOUNTED AIR HANDLING UNITS (RTU), EXHAUST FANS, AND MISCELLANEOUS HVAC EQUIPMENT UNDER THIS CONTRACT. VRF SEQUENCES OF OPERATION ARE THE RESPONSIBILITY OF THE MECHANICAL CONTRACTOR. THE HVAC CONTRACTOR SHALL PROVIDE ALL CONTROLS AND INTERCONNECTING WIRING COMPLETE THE FACTORY-PROVIDED CONTROL SYSTEM FOR THE VARIABLE REFRIGERANT FLOW HVAC SYSTEM IN THIS FACILITY.

1.01 PART 1 GENERAL

1.02 THIS SECTION DEFINES THE GENERAL OPERATING PARAMETERS FOR THE BUILDIGN AUTOMATION SYSTEM PURCHASED UNDER SEPARATE CONTRACT BY THE OWNER. IT FURTHER DEFINES THE EXPECTED OPERATING PARAMETERS OF THE VRF SYSTEM AS DEFINED IN SPECIFICAITON SECTION 23 81 29.

1.03 SECTION INCLUDES

A. This section defines the manner and method by which controls function. Requirements for each type of control system operation are specified. Equipment, devices, and system components required for control systems are specified in other sections.

B. Sequence of operation for:
   1. Packaged Rooftop Outdoor Air Units with Energy Recovery
   2. Kitchen Exhaust Hoods / Kitchen Ventilation Systems
   3. Electrical Room Exhaust Fan
   4. Instantaneous Domestic Water Heater Array
   5. Variable Refrigerant Flow (VRF) Heat Pump Systems
   6. Dehumidifiers.
   7. Radiation and convectors.
   8. Energy Recovery Ventilators/Supply Air Units

1.04 RELATED SECTIONS

A. Section 23 09 23 - Direct-Digital Control System for HVAC.

B. Section 23 09 13 - Instrumentation and Control Devices for HVAC.

C. Section 26 27 17 - Equipment Wiring: Electrical characteristics and wiring connections.

1.05 SYSTEM DESCRIPTION

A. This Section defines the manner and method by which controls function. Requirements for each type of control system operation are specified. Equipment, devices, and system components required for control systems are specified in other Sections.

1.06 SUBMITTALS

A. See Section 01 30 00 - Administrative Requirements, for submittal procedures.

B. Sequence of Operation Documentation: Submit written sequence of operation for entire HVAC system and each piece of equipment.
   1. Preface: 1 or 2 paragraph overview narrative of the system describing its purpose, components and function.
   2. State each sequence in small segments and give each segment a unique number for referencing in Functional Test procedures; provide a complete description regardless of the completeness and clarity of the sequences specified in the contract documents.
   3. Include at least the following sequences:
      a. Start-up.

b. Warm-up mode.
c. Normal operating mode.
d. Unoccupied mode.
e. Shutdown.
f. Capacity control sequences and equipment staging.
g. Temperature and pressure control, such as setbacks, setups, resets, etc.
h. Detailed sequences for all control strategies, such as economizer control, optimum start/stop, staging, optimization, demand limiting, etc.
i. Effects of power or equipment failure with all standby component functions.
j. Sequences for all alarms and emergency shut downs.
k. Seasonal operational differences and recommendations.
l. Interactions and interlocks with other systems.

4. Include initial and recommended values for all adjustable settings, setpoints and parameters that are typically set or adjusted by operating staff; and any other control settings or fixed values, delays, etc. that will be useful during testing and operating the equipment.
5. For packaged controlled equipment, include manufacturer's furnished sequence of operation amplified as required to describe the relationship between the packaged controls and the control system, indicating which points are adjustable control points and which points are only monitored.
6. Include schedules, if known.

C. Control System Diagrams: Submit graphic schematic of the control system showing each control component and each component controlled, monitored, or enabled.
1. Label with settings, adjustable range of control and limits.
2. Include flow diagrams for each control system, graphically depicting control logic.
3. Include the system and component layout of all equipment that the control system monitors, enables or controls, even if the equipment is primarily controlled by packaged or integral controls.
4. Include draft copies of graphic displays indicating mechanical system components, control system components, and controlled function status and value.
5. Include all monitoring, control and virtual points specified in elsewhere.
6. Include a key to all abbreviations.

D. Points List: Submit list of all control points indicating at least the following for each point.
1. Name of controlled system.
2. Point abbreviation.
3. Point description; such as dry bulb temperature, airflow, etc.
4. Display unit.
5. Control point or setpoint (Yes / No); i.e. a point that controls equipment and can have its setpoint changed.
6. Monitoring point (Yes / No); i.e. a point that does not control or contribute to the control of equipment but is used for operation, maintenance, or performance verification.
7. Intermediate point (Yes / No); i.e. a point whose value is used to make a calculation which then controls equipment, such as space temperatures that are averaged to a virtual point to control reset.
8. Calculated point (Yes / No); i.e. a “virtual” point generated from calculations of other point values.

E. Project Record Documents: Record actual locations of components and setpoints of controls, including changes to sequences made after submission of shop drawings.

1.07 QUALITY ASSURANCE

A. Design system under direct supervision of a Professional Engineer experienced in design of this Work and licensed in DE.

PART 2 PRODUCTS - NOT USED

PART 3 EXECUTION

3.01 GENERAL SYSTEM DESIGN AND OPERATION STANDARDS

A. The BAS shall control the mechanical systems within the site based upon a variable refrigerant flow (VRF) heat pump system with central energy recovery ventilators supplying outdoor air to the terminal units. Large assebly spaces are served by packed DX cooling / gas fired heating rooftop units with energy recovery and hot-gas reheat-basd dehumidification controls.

B. Each unit shall be controlled by an individual DDC Controller and all required sensors, control valves, and appurtenances required to complete the sequence of operation. Units shall include occupied/unoccupied control, night-setback, morning warm-up/cool-down, and enthalpy-based economizer functions.

3.02 EXHAUST FANS

A. Exhaust Fans Serving Electrical Rooms
   1. Exhaust fans serving electrical storage rooms shall be controlled via thermostat to maintain 80 degrees F.
   2. Interlock fan with associated motor operated damper on the intake louver.
   3. Provide a current sensor for each fan to show operational status, as well as status of the associated MOD.

3.03 INSTANTANEOUS DOMESTIC WATER HEATERS

A. Interlock motor operated damper for combustion air intake to the instantaneous domestic water heating array fire-control.

B. Provide MOD position status.

3.04 KITCHEN EXHAUST HOODS / KITCHEN MAKE-UP AIR UNITS

A. Exhaust fans servince Hoods shall be controlled manually via a hood-mounted control system.

B. Provide a current sensor for each fan (supply and exhaust) to show operational status.

C. The following items shall be displayed at the Operator's Terminal:
   1. Operational status of fan via current sensor.

3.05 VARIABLE REFRIGERANT VOLUME HEAT PUMP SYSTEMS

A. The variable refrigerant split system shall have a BAS DDC interface wired to the manufacturer factory central system controller to provide operation, configuration, and monitoring of the system. The manufacturer factory central controller shall operate in BACnet protocol, and be connected to manufacturer factory space temperature sensors as specified.

B. Sequence of operation:
   1. Cooling Mode: Cooling mode shall be selected based on outdoor air temperatures or manually enabled or scheduled from the workstation. During the programmed occupied mode, the supply fan shall run continuously. On a rise in space temperature above the setpoint (75 degrees, adjustable), the manufacturer central controller shall energize the central compressor to provide cooling. The internal capacity control valve in the evaporator unit shall modulate to control the flow of refrigerant to maintain space temperature. On a fall in space temperature the refrigerant capacity control valve shall modulate closed.
   2. Heating Mode: Heating mode shall be selected based on outdoor air temperatures or manually enabled or scheduled from the workstation. During the programmed occupied mode, the supply fan shall run continuously. On a drop in space temperature below the setpoint (68 degrees, adjustable), the manufacturer central controller shall energize the central compressor to with the requisite reversing valve to provide heating to the evaporator unit as required. The internal capacity control valve in the evaporator unit shall modulate to control the flow of refrigerant to maintain space temperature. On a fall in space temperature the refrigerant capacity control valve shall modulate closed.
   3. The following items shall be accessible and displayed at the Operator's Terminal:

a. Space temperature setpoint at each fan-coil unit (user adjustable).
b. Actual space temperature of each fan-coil unit space.
c. Operational status of each fan-coil unit (heating, cooling, off, user adjustable).
d. Factory error codes from each unit.
e. Remote space temperature sensor override for each fan-coil unit (user adjustable to limit temperature adjustment range, heat/cool selection, fan speed).
f. Compressor Status
g. Accumulated Power Consumption

C. Each terminal unit (fan coil) shall be controlled by the factory-provided wall-mounted controller. The controller shall be capable of allowing space temperature adjustment of +1 / -1 degrees (user adjustable).

3.06 PACKAGED ROOFTOP UNITS WITH NATURAL GAS HEAT (RTU-1, RTU-2)

A. Each unit shall be controlled by an individual DDC Controller. The DDC Controller shall be wired to a space temperature sensor, space-level CO2 sensor, discharge air temperature sensor, return air temperature sensor, space differential pressure sensor, damper motors, and the contacts to the factory-mounted unit control system controlling the compressor(s), hot-gas bypass, hot-gas reheat, and gas train combustion equipment.

B. Cooling Mode:
1. During the programmed occupied mode, the supply fan, return fan, and energy recovery wheel shall run continuously with the outside air damper open to the minimum position (10% outdoor air, adjustable). The amount of outside air will be increased above the minimum setting on a rise in the space CO2 level above the setpoint of 1000 PPM (adjustable) up to the code required minimum O/A (see schedule). On a return to the CO2 level setpoint the reverse shall occur. On a rise in temperature above the programmed cooling setpoint (adjustable), the following shall occur, in order, and to the extent necessary:
a. The DX cooling system shall be engaged. The compressors and hot-gas bypass system shall modulate as necessary to meet the cooling demands of the space and the discharge air temperature setpoint (adjustable).
b. When dehuminidifcation is required as sensed by the factory-provided humidistat (setpoint, 60% RH, adjustable), the hot-gas reheat system will be engaged and follow the factory-programmed sequence.
c. Upon a fall in space temperature the reverse shall occur.
2. The factory-provided VFD shall modulate the speed of the energy recovery wheel as required to maintain optimal performance as the outdoor air levels vary with the CO2 levels within the space.
3. For units equipped with an outdoor air economizer: The DDC Controller shall receive input from the Global Enthalpy Sensor. If the enthalpy of the outdoor air is lower than the defined minimum level (user adjustable) the economizer sequence shall be activated upon a call for cooling. This sequence shall include opening the outside air damper up to 100%, opening the outside air. This shall be done for each unit that is in operation. The outside air damper shall never close past the minimum position during the occupied period.

C. Heating Mode:
1. During the programmed occupied mode, the supply fan and return fan (if equipped) shall run continuously with the outside air damper open to the minimum position (10% outdoor air, adjustable). The amount of outside air will be increased above the minimum setting on a rise in the space CO2 level above the setpoint of 1000 PPM (adjustable). On a return to setpoint the reverse shall occur. On a drop in temperature below the programmed heating setpoint, the following shall occur, in order, and to the extent necessary:
a. The factory-mounted controller shall command the gas-train to ignite and provide heating. The gas-train shall modulate from it's lowest to highest setting depending on demand.

b. When dehuminidifcation is required as sensed by the factory-provided humidistat (setpoint, 60% RH, adjustable), the hot-gas reheat system will be engaged and follow the factory-programmed sequence.
c. Upon a rise in space temperature the reverse shall occur.

2. The factory-provided VFD shall modulate the speed of the energy recovery wheel as required to maintain optimal performance as the outdoor air levels vary with the CO2 levels within the space.

D. Unoccupied Mode:
1. During the programmed un-occupied mode, the supply fan, compressor, gas train, and dampers for shall be cycled / modulated to maintain the un-occupied setpoints (55 degrees in Heating mode, 80 degrees in Cooling mode, both adjustable). Unless required for economizer cycle, the outside air damper shall remain closed.

E. All setpoints and shall be adjustable at the BAS workstation.

F. Provide a current sensor on one phase of power feeding each supply fan, exhaust fan, heat wheel, and compressor for status indication at the Operator's Terminal.

G. If the discharge temperature fails to rise to a programmed minimum temperature during a call for heating; a low temperature alarm shall be activated at the Operator's Terminal. If the discharge temperature fails to fall to a programmed minimum temperature on a call for mechanical cooling, a high temperature alarm shall be activated at the Operator's Terminal.

H. The following items shall be displayed at the Operator's Terminal:
1. Space temperature.
2. Space temperature setpoint.
3. Space humidity.
4. Space humidity setpoint.
5. Low Space temperature alarm.
6. High Space temperature alarm.
7. Discharge air temperature.
8. Discharge air temperature setpoint.
9. Return air temperature.
10. Outside air temperature, humidity and enthalpy.
11. Economizer enthalpy setpoint.
12. Space CO2 level.
13. Space CO2 level setpoint.
14. Space high CO2 level alarm: “1500 PPM”, adjustable.
15. Supply fan operational status via current sensor.
16. Commanded status of supply fan.
17. Exhaust fan operational status via current sensor.
18. Commanded status of exhaust fan.
19. Heat Wheel operational status via current sensor.
20. Commanded status of heat wheel.
21. Commanded status of compressor(s).
22. Commanded status of gas-train.
23. Commanded position of dampers.
24. Diagram showing the layout of the unit with major components and dynamic temperatures shown where temperature sensors exist in the system.

3.07 HEAT ONLY ROOFTOP UNITS WITH NATURAL GAS HEAT (RTU-3)

A. Each unit shall be controlled by an individual DDC Controller. The DDC Controller shall be wired to a space temperature sensor, discharge air temperature sensor, return air temperature sensor, damper motors, and the contacts to the factory-mounted unit control system controlling the gas train combustion equipment.

B. Operation:

1. During the programmed occupied mode, the supply fan and return fan (if equipped) shall run continuously with the outside air damper open to the minimum position as identified on the schedule. On a drop in temperature below the programmed heating setpoint, the following shall occur, in order, and to the extent necessary:
    a. The factory-mounted controller shall command the gas-train to ignite and provide heating. The gas-train shall modulate from it's lowest to highest setting depending on demand.
    b. Upon a rise in space temperature the reverse shall occur.

C. Unoccupied Mode:
1. During the programmed un-occupied mode, the supply fan, compressor, gas train, and dampers for shall be cycled / modulated to maintain the un-occupied setpoints (55 degrees in Heating mode, 80 degrees in Cooling mode, both adjustable). Unless required for economizer cycle, the outside air damper shall remain closed.

D. All setpoints and shall be adjustable at the BAS workstation.

E. Provide a current sensor on one phase of power feeding each supply fan and exhaust fan (if present).

F. If the discharge temperature fails to rise to a programmed minimum temperature during a call for heating; a low temperature alarm shall be activated at the Operator's Terminal.

G. The following items shall be displayed at the Operator's Terminal:
1. Space temperature.
2. Space temperature setpoint.
3. Low Space temperature alarm.
4. Discharge air temperature.
5. Discharge air temperature setpoint.
6. Return air temperature.
7. Outside air temperature, humidity and enthalpy.
8. Supply fan operational status via current sensor.
9. Commanded status of supply fan.
10. Exhaust fan operational status via current sensor.
11. Commanded status of exhaust fan.
12. Commanded status of gas-train.
13. Commanded position of dampers.
14. Diagram showing the layout of the unit with major components and dynamic temperatures shown where temperature sensors exist in the system.

3.08 ELECTRIC RESISTANCE RADIANT AND CONVECTIVE HEATING UNITS

A. The electric-resistance radiant and convective heating units shall be controlled by a self contained, unit mounted controller with remote sensing element.

3.09 DEHUMIDIFIERS

A. Dehumidifiers shall maintain given setpoint (60% RH, adjustable) via the factory-provided humidistat.

B. BAS shall monitor the space RH via an independent humidity sensor located within the space, as well as provide operational status of the dehumidifier via current sensor.

3.10 RADIATION AND CONVECTORS

A. Single temperature room thermostat set at 60 degrees F maintains constant space temperature by energizing electric heaters.

B. BAS to provide room temperature sensor for monitoring spaces.

3.11 UNIT HEATERS

A. Each unit shall be conrtrolled by an individual DDC controller and space temperature sensor. Single temperature room temperature sensor maintains constant space temperature of 68 degrees F by cycling unit fan motor and gas train.

B. The factory gas train shall control all integral combustion components and safeties for the system.

C. Provide room temperature setpoint and actual space temperature readings at the BAS head-end.

3.12 SUPPLY AIR UNITS AND ENERGY RECOVERY VENTILATORS (ERV)

A. Supply air units and ERV's shall be scheduled for occupied and unoccupied cycles based on an operator adjustable time schedule. Units may also be manually enabled and disabled at the operator workstation. Fan status shall be monitored by the BAS via the fans current sensing relay.

B. The variable frequency drives shall be set by the balancer to deliver the minimum outdoor air to each associated terminal unit under fully-occupied conditions.

C. When any heat pump in the area served be the heat recovery unit is in the occupied mode the unit shall be energized.
   1. The unit exhaust and outside air isolation dampers shall open.
   2. Provide proof of airflow for each fan and provide fan failure alarms.
   3. Provide temperature indication of the supply and exhaust inlet and leaving air.
   4. For units over 2,000 cfm a duct smoke detector shall be provided by the electrical contractor. Provide the interlock wiring to shut down the units upon activation.
   5. The electric heating coil shall be energized when required to maintain a minimum discharge air (supply air) temperature of 60 degrees to the units.

D. The following items shall be displayed at the operators workstation:
   1. Discharge temperature.
   2. Return air temperature.
   3. Outside air temperature, humidity and enthalpy.
   4. Fan operational status via current sensor.
   5. Commanded status of fan.
   6. Commanded status of heating coils (as applicable).
   7. Commanded status of gas-train (as applicable).
   8. Commanded position of dampers.
   9. Diagram showing the layout of the unit with major components and dynamic temperatures shown where temperature sensors exist in the system.

END OF SECTION

SECTION 23 23 00

REFRIGERANT PIPING

PART 1 GENERAL

1.01 SECTION INCLUDES

A. Piping.

B. Refrigerant.

C. Moisture and liquid indicators.

D. Valves.

E. Strainers.

F. Check valves.

G. Pressure relief valves.

H. Filter-driers.

I. Solenoid valves.

J. Expansion valves.

K. Receivers.

L. Flexible connections.

1.02 RELATED REQUIREMENTS

A. Section 08 31 00 - Access Doors and Panels.

B. Section 09 90 00 - Painting and Coating.

C. Section 22 07 19 - Plumbing Piping Insulation.

D. Section 22 07 16 - Plumbing Equipment Insulation.

E. Section 23 54 00 - Furnaces.

F. Section 23 61 00 - Refrigerant Compressors.

G. Section 23 62 13 - Packaged Air-Cooled Refrigerant Compressor and Condenser Units.

H. Section 23 63 13 - Air Cooled Refrigerant Condensers.

I. Section 23 81 24 - Computer Room Air Conditioners - Floor Mounted.

J. Section 23 82 16 - Air Coils.

K. Section 23 09 93 - Sequence of Operations for HVAC Controls.

L. Section 26 27 17 - Equipment Wiring: Electrical characteristics and wiring connections.

1.03 REFERENCE STANDARDS

A. AHRI 495 - Performance Rating of Refrigerant Liquid Receivers; Air-Conditioning, Heating, and Refrigeration Institute.

B. AHRI 710 - Performance Rating of Liquid-Line Driers; Air-Conditioning, Heating, and Refrigeration Institute.

C. AHRI 730 - Flow-Capacity Rating and Application of Suction-Line Filters and Filter Driers; Air-Conditioning, Heating, and Refrigeration Institute.

D. AHRI 750 - Standard for Thermostatic Refrigerant Expansion Valves; Air-Conditioning, Heating, and Refrigeration Institute.

E. AHRI 760 - Standard for Performance Rating of Solenoid Valves for Use With Volatile Refrigerants; Air-Conditioning, Heating, and Refrigeration Institute.

F. ASHRAE Std 15 - Safety Standard for Refrigeration Systems; American Society of Heating, Refrigerating and Air-Conditioning Engineers, Inc. (ANSI/ASHRAE Std 15).

G. ASHRAE Std 34 - Designation and Safety Classification of Refrigerants; American Society of Heating, Refrigerating and Air-Conditioning Engineers, Inc..

H. ASME (BPV VIII, 1) - Boiler and Pressure Vessel Code, Section VIII, Division 1 - Rules for Construction of Pressure Vessels; The American Society of Mechanical Engineers.

I. ASME (BPV IX) - Boiler and Pressure Vessel Code, Section IX - Welding and Brazing Qualifications; The American Society of Mechanical Engineers.

J. ASME B16.22 - Wrought Copper and Copper Alloy Solder Joint Pressure Fittings; The American Society of Mechanical Engineers.

K. ASME B16.26 - Cast Copper Alloy Fittings For Flared Copper Tubes; The American Society of Mechanical Engineers.

L. ASME B31.5 - Refrigeration Piping and Heat Transfer Components; The American Society of Mechanical Engineers.

M. ASME B31.9 - Building Services Piping; The American Society of Mechanical Engineers (ANSI/ASME B31.9).

N. ASTM A53/A53M - Standard Specification for Pipe, Steel, Black and Hot-Dipped, Zinc-Coated, Welded and Seamless.

O. ASTM A234/A234M - Standard Specification for Piping Fittings of Wrought Carbon Steel and Alloy Steel for Moderate and High Temperature Service.

P. ASTM B88 - Standard Specification for Seamless Copper Water Tube.

Q. ASTM B88M - Standard Specification for Seamless Copper Water Tube (Metric).

R. ASTM B280 - Standard Specification for Seamless Copper Tube for Air Conditioning and Refrigeration Field Service.

S. ASTM F708 - Standard Practice for Design and Installation of Rigid Pipe Hangers.

T. AWS A5.8/A5.8M - Specification for Filler Metals for Brazing and Braze Welding; American Welding Society.

U. AWS D1.1/D1.1M - Structural Welding Code - Steel.

V. MSS SP-58 - Pipe Hangers and Supports - Materials, Design and Manufacture, Selection, Application, and Installation; Manufacturers Standardization Society of the Valve and Fittings Industry, Inc..

W. MSS SP-69 - Pipe Hangers and Supports - Selection and Application; Manufacturers Standardization Society of the Valve and Fittings Industry, Inc..

X. MSS SP-89 - Pipe Hangers and Supports - Fabrication and Installation Practices; Manufacturers Standardization Society of the Valve and Fittings Industry, Inc..

Y. UL 429 - Electrically Operated Valves; Underwriters Laboratories Inc..

1.04 SYSTEM DESCRIPTION

A. Where more than one piping system material is specified ensure system components are compatible and joined to ensure the integrity of the system is not jeopardized. Provide necessary joining fittings. Ensure flanges, union, and couplings for servicing are consistently provided.

B. Provide pipe hangers and supports in accordance with MSS SP-69 unless indicated otherwise.

C. Liquid Indicators:
   1. Use line size liquid indicators in main liquid line leaving condenser.
   2. If receiver is provided, install in liquid line leaving receiver.
   3. Use line size on leaving side of liquid solenoid valves.

D. Valves:
   1. Use service valves on suction and discharge of compressors.
   2. Use gage taps at compressor inlet and outlet.
   3. Use gage taps at hot gas bypass regulators, inlet and outlet.
   4. Use check valves on compressor discharge.
   5. Use check valves on condenser liquid lines on multiple condenser systems.

E. Refrigerant Charging (Packed Angle) Valve: Use in liquid line between receiver shut-off valve and expansion valve.

F. Strainers:
   1. Use line size strainer upstream of each automatic valve.
   2. Where multiple expansion valves with integral strainers are used, use single main liquid line strainer.
   3. On steel piping systems, use strainer in suction line.
   4. Use shut-off valve on each side of strainer.

G. Pressure Relief Valves: Use on ASME receivers and pipe to outdoors.

H. Filter-Driers:
   1. Use a filter-drier immediately ahead of liquid-line controls, such as thermostatic expansion valves, solenoid valves, and moisture indicators.
   2. Use a filter-drier on suction line just ahead of compressor.
   3. Use sealed filter-driers in lines smaller than 1/2 inch outside diameter.
   4. Use sealed filter-driers in low temperature systems.
   5. Use sealed filter-driers in systems utilizing hermetic compressors.
   6. Use replaceable core filter-driers in lines of 1/2 inch outside diameter or greater.
   7. Use replaceable core liquid-line filter-driers in systems utilizing receivers.
   8. Use filter-driers for each solenoid valve.

I. Solenoid Valves:
   1. Use in liquid line of systems operating with single pump-out or pump-down compressor control.
   2. Use in liquid line of single or multiple evaporator systems.

3. Use in oil bleeder lines from flooded evaporators to stop flow of oil and refrigerant into the suction line when system shuts down.

J. Receivers:
1. Use on systems five tons and larger, sized to accommodate pump down charge.
2. Use on systems with long piping runs.

K. Flexible Connectors: Utilize at or near compressors where piping configuration does not absorb vibration.

1.05 SUBMITTALS

A. Product Data: Provide general assembly of specialties, including manufacturers catalogue information. Provide manufacturers catalog data including load capacity.

B. Shop Drawings: Indicate schematic layout of system, including equipment, critical dimensions, and sizes.

C. Design Data: Submit design data indicating pipe sizing. Indicate load carrying capacity of trapeze, multiple pipe, and riser support hangers.

D. Test Reports: Indicate results of leak test, acid test.

E. Manufacturer's Installation Instructions: Indicate support, connection requirements, and isolation for servicing.

F. Submit welders certification of compliance with ASME (BPV IX) or AWS D1.1.

G. Project Record Documents: Record exact locations of equipment and refrigeration accessories on record drawings.

H. Maintenance Data: Include instructions for changing cartridges, assembly views, spare parts lists.

1.06 QUALITY ASSURANCE

A. Installer Qualifications: Company specializing in performing the type of work specified in this section, with minimum five years of documented experience.

B. Design piping system under direct supervision of a Professional Engineer experienced in design of this type of work.

C. Design piping system under direct supervision of a Professional Engineer experienced in design of this type of work and licensed in DE.

1.07 REGULATORY REQUIREMENTS

A. Conform to ASME B31.9 for installation of piping system.

B. Welding Materials and Procedures: Conform to ASME (BPV IX) and applicable state labor regulations.

C. Welders Certification: In accordance with ASME (BPV IX) or AWS D1.1.

D. Products Requiring Electrical Connection: Listed and classified by UL, as suitable for the purpose indicated.

1.08 DELIVERY, STORAGE, AND HANDLING

A. Deliver and store piping and specialties in shipping containers with labeling in place.

B. Protect piping and specialties from entry of contaminating material by leaving end caps and plugs in place until installation.

C. Dehydrate and charge components such as piping and receivers, seal prior to shipment, until connected into system.

1.09 MAINTENANCE PRODUCTS

A. See Section 01 60 00 - Product Requirements, for additional provisions.

B. Provide two refrigeration oil test kits each containing everything required to conduct one test.

C. Provide two filter-dryer cartridges of each type.

PART 2 PRODUCTS

2.01 PIPING

A. Copper Tube: ASTM B280, H58 hard drawn.
   1. Fittings: ASME B16.22 wrought copper.
   2. Joints: Braze, AWS A5.8 BCuP silver/phosphorus/copper alloy.

B. Copper Tube to 7/8 inch OD: ASTM B88 (ASTM B88M), Type K (A), annealed.
   1. Fittings: ASME B16.26 cast copper.
   2. Joints: Flared.

C. Steel Pipe: ASTM A53/A53M, Schedule 40, black.
   1. Fittings: ASTM A234/A234M, wrought steel welding type.
   2. Joints: Welded in accordance with AWS D1.1.

D. Steel Pipe Sizes 12 Inch and Over: ASTM A53/A53M, 0.375 inch wall, black.
   1. Fittings: ASTM A234/A234M, wrought steel welding type.
   2. Joints: Welded in accordance with AWS D1.1.

E. Pipe Supports and Anchors:
   1. Conform to ASTM F 708, MSS SP-58, MSS SP-69, and MSS SP-89.
   2. Hangers for Pipe Sizes 1/2 to 1-1/2 Inch: Carbon steel adjustable swivel, split ring.
   3. Hangers for Pipe Sizes 2 Inches and Over: Carbon steel, adjustable, clevis.
   4. Multiple or Trapeze Hangers: Steel channels with welded spacers and hanger rods.
   5. Wall Support for Pipe Sizes to 3 Inches: Cast iron hook.
   6. Wall Support for Pipe Sizes 4 Inches and Over: Welded steel bracket and wrought steel clamp.
   7. Vertical Support: Steel riser clamp.
   8. Floor Support: Cast iron adjustable pipe saddle, lock nut, nipple, floor flange, and concrete pier or steel support.
   9. Copper Pipe Support: Carbon steel ring, adjustable, copper plated.
   10. Hanger Rods: Mild steel threaded both ends, threaded one end, or continuous threaded.
   11. Inserts: Malleable iron case of galvanized steel shell and expander plug for threaded connection with lateral adjustment, top slot for reinforcing rods, lugs for attaching to forms; size inserts to suit threaded hanger rods.

2.02 REFRIGERANT

A. Refrigerant: See Schedules

2.03 MOISTURE AND LIQUID INDICATORS

A. Manufacturers:

1. Henry Technologies: www.henrytech.com.
2. Parker Hannifin/Refrigeration and Air Conditioning: www.parker.com.
3. Sporlan Valve Company: www.sporlan.com.

B. Indicators: Single or Doubleport type, UL listed, with copper or brass body, flared or solder ends, sight glass, color coded paper moisture indicator with removable element cartridge and plastic cap; for maximum temperature of 200 degrees F and maximum working pressure of 500 psi.

2.04 VALVES

A. Manufacturers:
1. Hansen Technologies Corporation: www.hantech.com.
2. Henry Technologies: www.henrytech.com.
3. Danfoss Flomatic: www.flomatic.com.

B. Diaphragm Packless Valves:
1. UL listed, globe or angle pattern, forged brass body and bonnet, phosphor bronze and stainless steel diaphragms, rising stem and handwheel, stainless steel spring, nylon seat disc, solder or flared ends, with positive backseating; for maximum working pressure of 500 psi and maximum temperature of 275 degrees F.

C. Packed Angle Valves:
1. Forged brass or nickel plated forged steel, forged brass seal caps with copper gasket, rising stem and seat with backseating, molded stem packing, solder or flared ends; for maximum working pressure of 500 psi and maximum temperature of 275 degrees F.

D. Ball Valves:
1. Two piece bolted forged brass body with teflon ball seals and copper tube extensions, brass bonnet and seal cap, chrome plated ball, stem with neoprene ring stem seals; for maximum working pressure of 500 psi and maximum temperature of 300 degrees F.

E. Service Valves:
1. Forged brass body with copper stubs, brass caps, removable valve core, integral ball check valve, flared or solder ends, for maximum pressure of 500 psi.

2.05 STRAINERS

A. Straight Line or Angle Line Type:
1. Brass or steel shell, steel cap and flange, and replaceable cartridge, with screen of stainless steel wire or monel reinforced with brass; for maximum working pressure of 430 psi.

B. Straight Line, Non-Cleanable Type:
1. Steel shell, copper plated fittings, stainless steel wire screen, for maximum working pressure of 500 psi.

2.06 CHECK VALVES

A. Manufacturers:
1. Hansen Technologies Corporation: www.hantech.com.
2. Parker Hannifin/Refrigeration and Air Conditioning: www.parker.com.
3. Sporlan Valve Company: www.sporlan.com.
4. Substitutions: See Section 01 60 00 - Product Requirements.

B. Globe Type:
1. Cast bronze or forged brass body, forged brass cap with neoprene seal, brass guide and disc holder, phosphor-bronze or stainless steel spring, teflon seat disc; for

maximum temperature of 300 degrees F and maximum working pressure of 500 psi.

C. Straight Through Type:
   1. Brass body and disc, phosphor-bronze or stainless steel spring, neoprene seat; for maximum working pressure of 500 psi and maximum temperature of 200 degrees F.

2.07 PRESSURE REGULATORS

A. Manufacturers:
   1. Hansen Technologies Corporation: www.hantech.com.
   2. Parker Hannifin/Refrigeration and Air Conditioning: www.parker.com.
   3. Sporlan Valve Company: www.sporlan.com.
   4. Substitutions: See Section 01 60 00 - Product Requirements.

B. Brass body, stainless steel diaphragm, direct acting, adjustable over 0 to 80 psi range, for maximum working pressure of 450 psi.

2.08 PRESSURE RELIEF VALVES

A. Manufacturers:
   1. Hansen Technologies Corporation: www.hantech.com.
   2. Henry Technologies: www.henrytech.com.
   3. Sherwood Valve/Harsco Corporation: www.sherwoodvalve.com.
   4. Substitutions: See Section 01 60 00 - Product Requirements.

B. Straight Through or Angle Type: Brass body and disc, neoprene seat, factory sealed and stamped with ASME UV and National Board Certification NB, selected to ASHRAE Std 15, with standard setting of 425 psi, adjusted to meet system requirements.

2.09 FILTER-DRIERS

A. Manufacturers:
   1. Flow Controls Division of Emerson Electric: www.emersonflowcontrols.com.
   2. Parker Hannifin/Refrigeration and Air Conditioning: www.parker.com.
   3. Sporlan Valve Company: www.sporlan.com.
   4. Substitutions: See Section 01 60 00 - Product Requirements.

B. Performance:
   1. Flow Capacity - Liquid Line: As indicated in schedule, minimum, rated in accordance with AHRI 710.
   2. Flow Capacity - Suction Line: As indicated in schedule, minimum, rated in accordance with AHRI 730.
   3. Water Capacity: As indicated in schedule, rated in accordance with AHRI 710.
   4. Pressure Drop: 2 psi, As indicated in schedule, maximum, when operating at full connected evaporator capacity.
   5. Design Working Pressure: As indicated in schedule or 350 psi, minimum.

C. Cores: Molded or loose-fill molecular sieve desiccant compatible with refrigerant, activated alumina, activated charcoal, and filtration to 40 microns; of construction that will not pass into refrigerant lines.

D. Construction: UL listed.
   1. Replaceable Core Type: Steel shell with removable cap.
   2. Sealed Type: Copper shell.
   3. Connections: As specified for applicable pipe type.

2.10 SOLENOID VALVES

A. Manufacturers:
   1. Flow Controls Division of Emerson Electric: www.emersonflowcontrols.com.
   2. Parker Hannifin/Refrigeration and Air Conditioning: www.parker.com.
   3. Sporlan Valve Company: www.sporlan.com.

B. Valve: AHRI 760, pilot operated, copper or brass body and internal parts, synthetic seat, stainless steel stem and plunger assembly (permitting manual operation in case of coil failure), integral strainer, with flared, solder, or threaded ends; for maximum working pressure of 500 psi.

C. Coil Assembly: UL 429, UL listed, replaceable with molded electromagnetic coil, moisture and fungus proof, with surge protector and color coded lead wires, integral junction box with pilot light.

D. Electrical Characteristics: per drawings.

2.11 EXPANSION VALVES

A. Manufacturers:
   1. Flow Controls Division of Emerson Electric: www.emersonflowcontrols.com.
   2. Parker Hannifin/Refrigeration and Air Conditioning: www.parker.com.
   3. Sporlan Valve Company: www.sporlan.com.

B. Angle or Straight Through Type: AHRI 750; design suitable for refrigerant, brass body, internal or external equalizer, mechanical pressure limit (maximum operating pressure MOP feature), adjustable superheat setting, replaceable inlet strainer, with replaceable capillary tube and remote sensing bulb and remote bulb well.

C. Selection: Evaluate refrigerant pressure drop through system to determine available pressure drop across valve. Select valve for maximum load at design operating pressure and minimum 10 degrees F superheat. Select to avoid being undersized at full load and excessively oversized at part load.

2.12 ELECTRONIC EXPANSION VALVES

A. Manufacturers:
   1. Danfoss Automatic Controls: www.danfoss.com.
   2. Parker Hannifin/Refrigeration and Air Conditioning: www.parker.com.
   3. Sporlan Valve Company: www.sporlan.com.

B. Valve:
   1. Brass body with flared or solder connection, needle valve with floating needle and machined seat, stepper motor drive.
   2. Capacity: per drawings.
   3. Electrical Characteristics: per drawings.

C. Evaporation Control System:
   1. Electronic microprocessor based unit in enclosed case, proportional integral control with adaptive superheat, maximum operating pressure function, preselection allowance for electrical defrost and hot gas bypass.
   2. Electrical Characteristics: per drawings.

D. Refrigeration System Control: Electronic microprocessor based unit in enclosed case, with proportional integral control of valve, on/off thermostat, air temperature alarm (high and low), solenoid valve control, liquid injection adaptive superheat control, maximum operating pressure function, night setback thermostat, timer for defrost control.

2.13 RECEIVERS

A. Manufacturers:
   1. Henry Technologies: www.henrytech.com.
   2. Parker Hannifin/Refrigeration and Air Conditioning: www.parker.com.
   3. Sherwood Valve/Harsco Corporation: www.sherwoodvalve.com.

B. Internal Diameter 6 inch and Smaller:
   1. AHRI 495, UL listed, steel, brazed; 400 psi maximum pressure rating, with tappings for inlet, outlet, and pressure relief valve.

C. Internal Diameter Over 6 inch:
   1. AHRI 495, welded steel, tested and stamped in accordance with ASME (BPV VIII, 1); 400 psi with tappings for liquid inlet and outlet valves, pressure relief valve, and magnetic liquid level indicator.

2.14 FLEXIBLE CONNECTORS

A. Manufacturers:
   1. Circuit Hydraulics, Ltd: www.circuit-hydraulics.co.uk.
   2. Flexicraft Industries: www.flexicraft.com.
   3. Penflex: www.penflex.com.

B. Corrugated stainless steel or bronze hose with single layer of stainless steel exterior braiding, minimum 9 inches long with copper tube ends; for maximum working pressure of 500 psi.

PART 3 EXECUTION

3.01 PREPARATION

A. Ream pipe and tube ends. Remove burrs. Bevel plain end ferrous pipe.

B. Remove scale and dirt on inside and outside before assembly.

C. Prepare piping connections to equipment with flanges or unions.

3.02 INSTALLATION

A. Install refrigeration specialties in accordance with manufacturer's instructions.

B. Route piping in orderly manner, with plumbing parallel to building structure, and maintain gradient.

C. Install piping to conserve building space and avoid interference with use of space.

D. Group piping whenever practical at common elevations and locations. Slope piping one percent in direction of oil return.

E. Install piping to allow for expansion and contraction without stressing pipe, joints, or connected equipment.

F. Inserts:
   1. Provide inserts for placement in concrete formwork.
   2. Provide inserts for suspending hangers from reinforced concrete slabs and sides of reinforced concrete beams.
   3. Provide hooked rod to concrete reinforcement section for inserts carrying pipe over 4 inches.
   4. Where concrete slabs form finished ceiling, locate inserts flush with slab surface.
   5. Where inserts are omitted, drill through concrete slab from below and provide through-bolt with recessed square steel plate and nut flush with top of or recessed into

and grouted flush with slab.

G. Pipe Hangers and Supports:
   1. Install in accordance with ASTM F 708 and MSS SP-89.
   2. Support horizontal piping as scheduled.
   3. Install hangers to provide minimum 1/2 inch space between finished covering and adjacent work.
   4. Place hangers within 12 inches of each horizontal elbow.
   5. Support vertical piping at every floor. Support riser piping independently of connected horizontal piping.
   6. Where several pipes can be installed in parallel and at same elevation, provide multiple or trapeze hangers.
   7. Provide copper plated hangers and supports for copper piping.

H. Arrange piping to return oil to compressor. Provide traps and loops in piping, and provide double risers as required. Slope horizontal piping 0.40 percent in direction of flow.

I. Provide clearance for installation of insulation and access to valves and fittings.

J. Provide access to concealed valves and fittings. Coordinate size and location of access doors with Section 08 31 00.

K. Flood piping system with nitrogen when brazing.

L. Where pipe support members are welded to structural building frame, brush clean, and apply one coat of zinc rich primer to welding.

M. Prepare unfinished pipe, fittings, supports, and accessories ready for finish painting. Refer to Section 09 90 00.

N. Insulate piping and equipment; refer to Section 22 07 19 and Section 22 07 16.

O. Follow ASHRAE Std 15 procedures for charging and purging of systems and for disposal of refrigerant.

P. Provide replaceable cartridge filter-driers, with isolation valves and valved bypass.

Q. Locate expansion valve sensing bulb immediately downstream of evaporator on suction line.

R. Provide external equalizer piping on expansion valves with refrigerant distributor connected to evaporator.

S. Install flexible connectors at right angles to axial movement of compressor, parallel to crankshaft.

T. Fully charge completed system with refrigerant after testing.

U. Provide electrical connection to solenoid valves. Refer to Section 26 27 17.

3.03 FIELD QUALITY CONTROL

A. Test refrigeration system in accordance with ASME B31.5.

B. Pressure test system with dry nitrogen to 200 psi. Perform final tests at 27 inches vacuum and 200 psi using electronic leak detector. Test to no leakage.

3.04 SCHEDULES

A. Hanger Spacing for Copper Tubing.
   1. 1/2 inch, 5/8 inch, and 7/8 inch OD: Maximum span, 5 feet; minimum rod size, 3/8 inch.

2. 1-1/8 inch OD: Maximum span, 6 feet; minimum rod size, 3/8 inch.
3. 1-3/8 inch OD: Maximum span, 7 feet; minimum rod size, 3/8 inch.
4. 1-5/8 inch OD: Maximum span, 8 feet; minimum rod size, 3/8 inch.
5. 2-1/8 inch OD: Maximum span, 8 feet; minimum rod size, 3/8 inch.
6. 2-5/8 inch OD: Maximum span, 9 feet; minimum rod size, 3/8 inch.
7. 3-1/8 inch OD: Maximum span, 10 feet; minimum rod size, 3/8 inch.
8. 3-5/8 inch OD: Maximum span, 11 feet; minimum rod size, 1/2 inch.
9. 4-1/8 inch OD: Maximum span, 12 feet; minimum rod size, 1/2 inch.

B. Hanger Spacing for Steel Piping.
1. 1/2 inch, 3/4 inch, and 1 inch: Maximum span, 7 feet; minimum rod size, 3/8 inch.
2. 1-1/4 inches: Maximum span, 8 feet; minimum rod size, 3/8 inch.
3. 1-1/2 inches: Maximum span, 9 feet; minimum rod size, 3/8 inch.
4. 2 inches: Maximum span, 10 feet; minimum rod size, 3/8 inch.
5. 2-1/2 inches: Maximum span, 11 feet; minimum rod size, 3/8 inch.
6. 3 inches: Maximum span, 12 feet; minimum rod size, 3/8 inch.
7. 4 inches: Maximum span, 12 feet; minimum rod size, 1/2 inch.

END OF SECTION

SECTION 23 31 00

HVAC DUCTS AND CASINGS

PART 1 GENERAL

1.01 SPECIAL NOTE - This specification includes details for an ALTERNATE as defined in the Bid Form for this project. It is as follows:

A. BASE BID - Contractor shall provide KoolDuct fabricated ductwork systems for all CONCEALED DUCTWORK ONLY.

B. ALTERNATE BID - Contractor shall provide metal ductwork with external insulation as indicated in the specifications.

1.02 SECTION INCLUDES

A. Metal ductwork.

B. Nonmetal ductwork.

C. Casing and plenums.

D. Kitchen hood ductwork.

E. Duct cleaning.

1.03 RELATED REQUIREMENTS

A. Section 03 30 00 - Cast-in-Place Concrete.

B. Section 09 90 00 - Painting and Coating: Weld priming, weather resistant, paint or coating.

C. Section 11 40 00 - Foodservice Equipment: Supply of kitchen range hoods for placement by this Section.

D. Section 23 07 13 - Duct Insulation: External insulation and duct liner.

E. Section 23 33 00 - Air Duct Accessories.

F. Section 23 36 00 - Air Terminal Units.

G. Section 23 37 00 - Air Outlets and Inlets.

H. Section 23 05 93 - Testing, Adjusting, and Balancing for HVAC.

1.04 REFERENCE STANDARDS

A. ASTM A36/A36M - Standard Specification for Carbon Structural Steel.

B. ASTM A653/A653M - Standard Specification for Steel Sheet, Zinc-Coated (Galvanized) or Zinc-Iron Alloy-Coated (Galvannealed) by the Hot-Dip Process.

C. ASTM A666 - Standard Specification for Annealed or Cold-Worked Austenitic Stainless Steel Sheet, Strip, Plate, and Flat Bar.

D. ASTM A1008/A1008M - Standard Specification for Steel, Sheet, Cold-Rolled, Carbon, Structural, High-Strength, Low Alloy, and High-Strength Low-Alloy with Improved Formability, Solution Hardened, and Bake Hardenable.

E. ASTM A1011/A1011M - Standard Specification for Steel, Sheet and Strip, Hot-Rolled, Carbon, Structural, High-Strength Low Alloy, High-Strength Low-Alloy With Improved Formability, and Ultra-High Strength.

F. ASTM B209 - Standard Specification for Aluminum and Aluminum-Alloy Sheet and Plate.

G. ASTM B209M - Standard Specification for Aluminum and Aluminum-Alloy Sheet and Plate [Metric].

H. ASTM C14 - Standard Specification for Nonreinforced Concrete Sewer, Storm Drain, and Culvert Pipe.

I. ASTM C14M - Standard Specification for Nonreinforced Concrete Sewer, Storm Drain, and Culvert Pipe [Metric].

J. ASTM C443 - Standard Specification for Joints for Concrete Pipe and Manholes, Using Rubber Gaskets.

K. ASTM C443M - Standard Specification for Joints for Concrete Pipe and Manholes, Using Rubber Gaskets (Metric).

L. NFPA 90A - Standard for the Installation of Air-Conditioning and Ventilating Systems; National Fire Protection Association.

M. NFPA 90B - Standard for the Installation of Warm Air Heating and Air Conditioning Systems; National Fire Protection Association.

N. NFPA 96 - Standard for Ventilation Control and Fire Protection of Commercial Cooking Operations; National Fire Protection Association.

O. SMACNA (LEAK) - HVAC Air Duct Leakage Test Manual; Sheet Metal and Air Conditioning Contractors' National Association.

P. SMACNA (DCS) - HVAC Duct Construction Standards.

Q. SMACNA (FGD) - Fibrous Glass Duct Construction Standards; Sheet Metal and Air Conditioning Contractors' National Association.

R. UL 181 - Standard for Factory-Made Air Ducts and Air Connectors; Underwriters Laboratories Inc..

1.05 PERFORMANCE REQUIREMENTS

A. No variation of duct configuration or sizes permitted except by written permission. Size round ducts installed in place of rectangular ducts in accordance with ASHRAE table of equivalent rectangular and round ducts.

1.06 SUBMITTALS

A. See Section 01 30 00 - Administrative Requirements, for submittal procedures.

B. Product Data: Provide data for duct materials and duct connections.

C. Shop Drawings: Indicate duct fittings, particulars such as gages, sizes, welds, and configuration prior to start of work for all systems.

D. Test Reports: Indicate pressure tests performed. Include date, section tested, test pressure, and leakage rate, following SMACNA (LEAK) - HVAC Air Duct Leakage Test Manual.

E. Manufacturer's Certificate: Certify that installation of glass fiber ductwork meet or exceed

recommended fabrication and installation requirements.

F. Project Record Documents: Record actual locations of ducts and duct fittings. Record changes in fitting location and type. Show additional fittings used.

1.07 QUALITY ASSURANCE

A. Manufacturer Qualifications: Company specializing in manufacturing the type of products specified in this section, with minimum three years of documented experience.

B. Installer Qualifications: Company specializing in performing the type of work specified in this section, with minimum five years of documented experience.

1.08 REGULATORY REQUIREMENTS

A. Construct ductwork to NFPA 90A, NFPA 90B, and NFPA 96 standards.

1.09 FIELD CONDITIONS

A. Do not install duct sealants when temperatures are less than those recommended by sealant manufacturers.

B. Maintain temperatures within acceptable range during and after installation of duct sealants.

PART 2 PRODUCTS

2.01 DUCT ASSEMBLIES

2.02 MATERIALS

A. **ALTERNATE CONCEALED DUCT MATERIAL**: Galvanized Steel for Ducts: Hot-dipped galvanized steel sheet, ASTM A653/A653M FS Type B, with G90/Z275 coating.

B. Aluminum for Ducts: ASTM B209 (ASTM B209M); aluminum sheet, alloy 3003-H14. Aluminum Connectors and Bar Stock: Alloy 6061-T651 or of equivalent strength.

C. **BASE BID CONCEALED DUCT MATERIAL:** KoolDuct Fabricated Ductwork System:
   1. The panels used in the fabrication of ductwork from the Kingspan KoolDuct System shall be Kingspan KoolDuct rigid phenolic insulation panels of nominal dimensions 9.68 ft x 3.94 ft or 12.89 ft x 3.94 ft and minimum compressive strength 29 psi, as manufactured by Kingspan Insulation Ltd and detailed in App. A1.
   2. Kingspan KoolDuct rigid phenolic insulation panels shall comprise a 3.4-3.75 pcf nominal density CFC/HCFC-free rigid phenolic insulation core with zero Ozone Depletion Potential (ODP), autohesively bonded on both sides to a 1 mil low vapour permeability aluminium foil facing reinforced with a 0.2” glass scrim.
   3. Kingspan KoolDuct rigid phenolic insulation panels are available in thicknesses of 7/8”, 1 3/16” and 1 5/16”. For determination of the thickness required to achieve a specified thermal performance refer to App. A2.
   4. All other components required for the fabrication of ductwork from the Kingspan KoolDuct System including the silicone sealant, contact adhesive, aluminium tape, self-adhesive gasket, ductwork reinforcements, closures, connectors and flanges shall be as approved / supplied by Kingspan Insulation Ltd.
   5. Fire & Smoke Performance
   6. The rigid phenolic insulation panels used in the fabrication of ductwork and / or ductwork sections fabricated from the Kingspan KoolDuct System shall achieve the following fire and smoke performance requirements:
      a. ASTM E 84-08a - unfaced or composite (insulation, facing and adhesive) of low contribution to fire growth not exceeding 25 Flame Spread and 50 Smoke

Developed indices;

b. UL 723 - unfaced or composite (insulation, facing and adhesive) of low contribution to fire growth not exceeding 25 Flame Spread and 50 Smoke Developed indices; and
c. UL 181 - UL/ULC classification as a Class 1 Air Duct to NFPA Standards 90A & 90B.
d. Fabrication of Ductwork

7. All ductwork fabricated from the Kingspan KoolDuct System shall be fabricated in accordance with methods as approved Kingspan Insulation Ltd.
8. Air Leakage
9. Ductwork system air leakage shall be in accordance with the requirements of the relevant jurisdiction. (Consult the DOE (US Department of Energy) ComCheck / ResCheck or the relevant authority for applicable codes / standards).
   a. Ductwork installations are required to be made sufficiently airtight to ensure quiet and economical operation of the system. The SMACNA HVAC Air Duct Leakage Test Manual, ANSI / ASHRAE / IESNA 90.1: 2007 and IECC 2003 & 2006 are referred to in many, but not all, specifications in order to determine the air leakage limits for ductwork systems.
   b. Ductwork sections fabricated from the Kingspan KoolDuct System shall not exceed permitted air leakage limits as follows:
   c. ANSI / ASHRAE / IESNA 90.1 and IECC 2003 & 2006 section 503.2.7
   d. The maximum allowable air leakage for all Class 6 (CL6) rectangular ducts is 6 x P0.65 as defined by
   e. SMACNA HVAC Air Duct Leakage Test Manual
10. All internal seams must be fully sealed with an unbroken layer of silicone sealant.
11. Each ductwork section must be duly connected with a jointing system approved Kingspan Insulation Ltd., and sufficient silicone sealant should be applied in order to seal the rigid phenolic insulation panel and ensure minimum air leakage.
12. Ductwork reinforcement, if necessary, shall be applied to protect against side deformation from both positive and negative pressure.
13. All external seams where two separate panels join must be taped to achieve a permanent bond and a smooth wrinkle free appearance.
14. The design of ductwork fittings shall be in conformance with the The ASHRAE Design Fundamentals Handbook Chapter 35 or SMACNA HVAC Duct System Design Manual.
15.

D. Insulated Flexible Ducts:
   1. Two ply vinyl film supported by helically wound spring steel wire; fiberglass insulation; polyethylene vapor barrier film.
      a. Pressure Rating: 10 inches WG positive and 1.0 inches WG negative.
      b. Maximum Velocity: 4000 fpm.
      c. Temperature Range: -10 degrees F to 160 degrees F.

E. **BASE BID**:All concealed ducts: Galvanized steel, unless otherwise indicated.

F. **ALTERNATE PRICING** All Concealed Ducts: Galvanized steel, unless otherwise indicated.

G. Low Pressure Supply (Heating Systems): 1/2 inch w.g. pressure class, galvanized steel or KoolDuct in concealed spaces.

H. Low Pressure Supply (System with Cooling Coils): 1/2 inch w.g. pressure class, galvanized steel or KoolDuct in concealed spaces.

I. Return and Relief: 1/2 inch w.g. pressure class, galvanized steel or KoolDuct.

J. General Exhaust: 1/2 inch w.g. pressure class, galvanized steel or KoolDuct.

K. Kitchen Cooking Hood Exhaust: 1/2 inch w.g. pressure class, stainless steel.
   1. Asphalt base.
   2. Construct of 18 gage stainless steel using continuous external welded joints in rectangular sections.

L. Joint Sealers and Sealants: Non-hardening, water resistant, mildew and mold resistant.
   1. Type: Heavy mastic or liquid used alone or with tape, suitable for joint configuration and compatible with substrates, and recommended by manufacturer for pressure class of ducts.
   2. VOC Content: Not more than 250 g/L, excluding water.

M. Grease Exhaust: 1/2 inch w.g. pressure class, stainless steel.
   1. Construct of ASTM A1011/A1011M 16 gage un-galvanized steel.
   2. Construction:
      a. Liquid tight with continuous external weld for all seams and joints.
      b. Where ducts are not self draining back to equipment, provide low point drain pocket with copper drain pipe to sanitary sewer.
   3. Access Doors:
      a. Provide for duct cleaning inside horizontal duct at drain pockets, every 20 feet and at each change of direction.
      b. Use same material and thickness as duct with gaskets and sealants rated 1500 degrees F for grease tight construction.
   4. Surface Burning Characteristics: Flame spread of zero, smoke developed of zero, when tested in accordance with ASTM E 84.

N. Outside Air Intake: 1/2 inch w.g. pressure class, galvanized steel or KoolDuct.

O. Hanger Rod: ASTM A 36/A 36M; steel; threaded both ends, threaded one end, or continuously threaded.

2.03 METAL DUCTWORK FABRICATION

A. Fabricate and support in accordance with SMACNA HVAC Duct Construction Standards and as indicated.

B. Provide duct material, gages, reinforcing, and sealing for operating pressures indicated.

C. Construct T's, bends, and elbows with radius of not less than 1-1/2 times width of duct on centerline. Where not possible and where rectangular elbows must be used, provide turning vanes. .

D. Increase duct sizes gradually, not exceeding 15 degrees divergence wherever possible; maximum 30 degrees divergence upstream of equipment and 45 degrees convergence downstream.

E. Fabricate continuously welded round and oval duct fittings in accordance with SMACNA HVAC Duct Construction Standards.

F. Fabricate continuously welded round and oval duct fittings two gages heavier than duct gages indicated in SMACNA Standard. Joints shall be minimum 4 inch cemented slip joint, brazed or electric welded. Prime coat welded joints.

G. Provide standard 45 degree lateral wye takeoffs unless otherwise indicated where 90 degree conical tee connections may be used.

H. Where ducts are connected to exterior wall louvers and duct outlet is smaller than louver frame, provide blank-out panels sealing louver area around duct. Use same material as duct, painted black on exterior side; seal to louver frame and duct.

2.04 MANUFACTURED DUCTWORK AND FITTINGS

A. Manufacture in accordance with SMACNA HVAC Duct Construction Standards - Metal and Flexible, and as indicated. Provide duct material, gages,reinforcing, and sealing for operating pressures indicated.

B. Double Wall Insulated Round Ducts: Round spiral lockseam duct with paintable galvanized steel outer wall, perforated galvanized steel inner wall; fitting with solid inner wall. Provide paint in color selected by architect.
   1. Manufacture in accordance with SMACNA HVAC Duct Construction Standards.
   2. Insulation:
      a. Thickness: 1 inch.
      b. Material: Fiberglass, with mylar coating between insulation and perforated liner.

C. Flexible Ducts: Two ply vinyl film supported by helically wound spring steel wire.
   1. Insulation: Fiberglass insulation with polyethylene vapor barrier film.
   2. Pressure Rating: 10 inches WG positive and 1.0 inches WG negative.
   3. Maximum Velocity: 4000 fpm.
   4. Temperature Range: -10 degrees F to 160 degrees F.

D. Transverse Duct Connection System: SMACNA "J" rated rigidly class connection, interlocking angle and duct edge connection system with sealant, gasket, cleats, and corner clips.
   1. Manufacturers:

2.05 CASINGS

A. Fabricate casings in accordance with SMACNA HVAC Duct Construction Standards and construct for operating pressures indicated.

B. Mount floor mounted casings on 4 inch high concrete curbs. At floor, rivet panels on 8 inch centers to angles. Where floors are acoustically insulated, provide liner of 18 gage galvanized expanded metal mesh supported at 12 inch centers, turned up 12 inches at sides with sheet metal shields.

C. Mount floor mounted casings on 4 inch high concrete curbs. At floor, rivet panels on 8 inch centers to angles. Where floors are acoustically insulated, provide liner of 18 gage galvanized expanded metal mesh supported at 12 inch centers, turned up 12 inches at sides with sheet metal shields.

D. Reinforce door frames with steel angles tied to horizontal and vertical plenum supporting angles. Install hinged access doors where indicated or required for access to equipment for cleaning and inspection.
   1. Provide clear wire glass observation ports, minimum 6 X 6 inch size.

PART 3 EXECUTION

3.01 INSTALLATION

A. Install, support, and seal ducts in accordance with SMACNA HVAC Duct Construction Standards.

B. Install in accordance with manufacturer's instructions.

C. During construction provide temporary closures of metal or taped polyethylene on open ductwork to prevent construction dust from entering ductwork system.

D. Duct sizes indicated are inside clear dimensions. For lined ducts, maintain sizes inside lining.

E. Install and seal metal and flexible ducts in accordance with SMACNA HVAC Duct Construction Standards - Metal and Flexible.

F. Provide openings in ductwork where required to accommodate thermometers and controllers. Provide pilot tube openings where required for testing of systems, complete with metal can with spring device or screw to ensure against air leakage. Where openings are provided in insulated ductwork, install insulation material inside a metal ring.

G. Locate ducts with sufficient space around equipment to allow normal operating and maintenance activities.

H. Use crimp joints with or without bead for joining round duct sizes 8 inch and smaller with crimp in direction of air flow.

I. Use double nuts and lock washers on threaded rod supports.

J. Tape joints of PVC coated metal ductwork with PVC tape.

K. Connect terminal units to supply ducts with one foot maximum length of flexible duct. Do not use flexible duct to change direction.

L. Connect diffusers or light troffer boots to low pressure ducts with 5 feet maximum length of flexible duct held in place with strap or clamp.

M. Connect flexible ducts to metal ducts with adhesive plus sheet metal screws.

N. Set plenum doors 6 to 12 inches above floor. Arrange door swings so that fan static pressure holds door in closed position.

O. Use stainless steel for ductwork exposed to view and stainless steel or carbon steel for ducts where concealed.

P. During construction provide temporary closures of metal or taped polyethylene on open ductwork to prevent construction dust from entering ductwork system.

Q. At exterior wall louvers, seal duct to louver frame and install blank-out panels as required.

R. KoolDuct installation - Additional Notes:
   1. Ductwork sections fabricated from the Kingspan KoolDuct System shall be installed in accordance with methods approved by Kingspan Insulation Ltd.
   2. The ductwork system shall be visually inspected before commencement of operation and ductwork sections fabricated from the Kingspan KoolDuct System shall be verified as having been installed correctly.
   3. Flexible connections shall be made between the ductwork and any item which is subject to vibration or movement.
   4. Support
      a. It shall be the responsibility of the installer to ensure that the ductwork system is properly and adequately supported. A number of support systems are approved for use by Kingspan Insulation Ltd. It shall be the responsibility of the installer to ensure that the chosen method of support is compatible with ductwork fabricated from the Kingspan KoolDuct System.
      b. With the exception of Tiger Supports, all metal support members in contact with the ductwork shall be separated by a soft gasket material.

c. Supports on straight runs of ductwork fabricated from the Kingspan KoolDuct System shall be positioned at centres not exceeding 10 ft for ductwork sections fabricated in 10 ft lengths, and 13 ft for ductwork sections fabricated in 13 ft lengths.
d. Additionally, ductwork shall be supported at changes of direction, at branch duct connections, tee fittings and etc.
e. All ductwork accessories such as dampers shall be independently supported.

5. Internal Ductwork
   a. All internal and exposed to view ductwork fabricated from Kingspan KoolDuct System may be provided with a protective finish in addition to the factory applied reinforced aluminium facing. The finish shall be either:
      1) aluminium / zinc alloy coated sheet steel (0.024”) which can be introduced during fabrication of the ductwork or installed in place; or
      2) a suitable paint finish (must not compromise factory applied reinforced aluminium facing or fire classification) applied in place.

3.02 RANGE HOOD EXHAUST DUCT INSTALLATIONS

A. Install ducts to allow for thermal expasion of ductwork through 2000 deg F temperature range.

B. Provide residue traps in kitchen hood exhaust ducts at base of vertical risers with provisions for clean out.

C. Install ducts withouth dips or traps that may collect residues, unless traps have continuous or automatic residue removal.

D. Install access openings at each change in direction and at 50-foot intervals; locate on sides of duct a minimum of 1-1 1/2 inches from bottom; and fit with grease-tight covers of same material as duct.

E. Do not penetrate fire-rated assemblies.

3.03 CLEANING

A. Clean duct system and force air at high velocity through duct to remove accumulated dust. To obtain sufficient air, clean half the system at a time. Protect equipment that could be harmed by excessive dirt with temporary filters, or bypass during cleaning.

3.04 SCHEDULES

A. Ductwork Material:
   1. Low Pressure Supply (Heating Systems): Steel, Aluminum, KoolDuct.
   2. Low Pressure Supply (System with Cooling Coils): Steel, Aluminum, KoolDuct
   3. Return and Relief: Steel, Aluminum, KoolDuct.
   4. General Exhaust: Steel, Aluminum, KoolDuct.
   5. Outside Air Intake: Steel, KoolDuct.
   6. Exposed round ductwork in all areas: Double-walled spiral.

B. Ductwork Pressure Class:
   1. Supply (Heating Systems): 1 inch
   2. Supply (System with Cooling Coils): 2 inch.
   3. Return and Relief: 1 inch.
   4. General Exhaust: 1 inch.
   5. Outside Air Intake: 1 inch.

END OF SECTION

SECTION 23 33 00

AIR DUCT ACCESSORIES

PART 1 GENERAL

1.01 SECTION INCLUDES

A. Air turning devices/extractors.

B. Backdraft dampers - metal.

C. Backdraft dampers.

D. Combination fire and smoke dampers.

E. Duct access doors.

F. Duct test holes.

G. Fire dampers.

H. Flexible duct connections.

I. Smoke dampers.

J. Volume control dampers.

1.02 RELATED REQUIREMENTS

A. Section 22 05 48 - Vibration and Seismic Controls for Plumbing Piping and Equipment.

B. Section 23 31 00 - HVAC Ducts and Casings.

C. Section 23 36 00 - Air Terminal Units: Pressure regulating damper assemblies.

D. Section 26 27 17 - Equipment Wiring: Electrical characteristics and wiring connections.

1.03 REFERENCE STANDARDS

A. NFPA 90A - Standard for the Installation of Air-Conditioning and Ventilating Systems; National Fire Protection Association.

B. NFPA 92 - Standard for Smoke-Control Systems.

C. NFPA 92A - Standard for Smoke-Control Systems Utilizing Barriers and Pressure Differences.

D. SMACNA (DCS) - HVAC Duct Construction Standards.

E. UL 33 - Heat Responsive Links for Fire-Protection Service; Underwriters Laboratories Inc..

F. UL 555 - Standard for Fire Dampers; Underwriters Laboratories Inc..

G. UL 555S - Standard for Leakage Rated Dampers for Use in Smoke Control Systems; Underwriters Laboratories Inc..

1.04 SUBMITTALS

A. See Section 01 30 00 - Administrative Requirements, for submittal procedures.

B. Product Data: Provide for shop fabricated assemblies including volume control dampers, duct access doors, duct test holes, and hardware used. Include electrical characteristics and connection requirements.

C. Shop Drawings: Indicate for shop fabricated assemblies including volume control dampers, duct access doors, and duct test holes.

D. Manufacturer's Installation Instructions: Provide instructions for fire dampers and combination fire and smoke dampers.

1.05 PROJECT RECORD DOCUMENTS

A. Record actual locations of access doors and test holes.

1.06 QUALITY ASSURANCE

A. Manufacturer Qualifications: Company specializing in manufacturing the type of products specified in this section, with minimum five years of documented experience.

B. Products Requiring Electrical Connection: Listed and classified by Underwriters Laboratories Inc. as suitable for the purpose specified and indicated.

1.07 DELIVERY, STORAGE, AND HANDLING

A. Protect dampers from damage to operating linkages and blades.

1.08 EXTRA MATERIALS

A. See Section 01 60 00 - Product Requirements, for additional provisions.

B. Provide two of each size and type of fusible link.

PART 2 PRODUCTS

2.01 AIR TURNING DEVICES/EXTRACTORS

A. Manufacturers:
   1. Krueger: www.krueger-hvac.com.
   2. Ruskin Company: www.ruskin.com.
   3. Titus: www.titus-hvac.com.
   4. Substitutions: See Section 01 60 00 - Product Requirements.

B. Multi-blade device with blades aligned in short dimension; steel construction; with individually adjustable blades, mounting straps.

2.02 BACKDRAFT DAMPERS - METAL

2.03 BACKDRAFT DAMPERS

A. Manufacturers:
   1. Louvers & Dampers, Inc: www.louvers-dampers.com.
   2. Nailor Industries Inc: www.nailor.com.
   3. Ruskin Company: www.ruskin.com.
   4. Greenheck Fan Corporation: www.greenheck.com.
   5. Substitutions: See Section 01 60 00 - Product Requirements.

B. Gravity Backdraft Dampers, Size 18 x 18 inches or Smaller, Furnished with Air Moving Equipment: Air moving equipment manufacturer's standard construction.

2.04 COMBINATION FIRE AND SMOKE DAMPERS

A. Manufacturers:
   1. Louvers & Dampers, Inc: www.louvers-dampers.com.
   2. Nailor Industries Inc: www.nailor.com.
   3. Ruskin Company: www.ruskin.com.
   4. Greenheck Fan Corporation: www.greenheck.com.
   5. Substitutions: See Section 01 60 00 - Product Requirements.

B. Fabricate in accordance with NFPA 90A, UL 555, UL 555S, and as indicated.

C. Provide factory sleeve and collar for each damper.

D. Multiple Blade Dampers: Fabricate with 16 gage galvanized steel frame and blades, oil-impregnated bronze or stainless steel sleeve bearings and plated steel axles, stainless steel jamb seals, 1/8 x 1/2 inch plated steel concealed linkage, stainless steel closure spring, blade stops, and lock, and 1/2 inch actuator shaft.

E. Operators: UL listed and labelled spring return electric type suitable for 120 volts, single phase, 60 Hz. Provide end switches to indicate damper position. Locate damper operator on interior of duct and link to damper operating shaft.

F. Normally Closed Smoke Responsive Fire Dampers: Curtain type, opening by gravity upon actuation of electro thermal link, flexible stainless steel blade edge seals to provide constant sealing pressure.

G. Normally Open Smoke Responsive Fire Dampers: Curtain type, closing upon actuation of electro thermal link, flexible stainless steel blade edge seals to provide constant sealing pressure, stainless steel springs with locking devices to ensure positive closure for units mounted horizontally.

H. Electro Thermal Link: Fusible link melting at 165 degrees F; 24 volts, UL listed and labeled.

2.05 DUCT ACCESS DOORS

A. Manufacturers:
   1. Nailor Industries Inc: www.nailor.com.
   2. Ruskin Company: www.ruskin.com.
   3. SEMCO Incorporated: www.semcoinc.com.
   4. Substitutions: See Section 01 60 00 - Product Requirements.

B. Fabricate in accordance with SMACNA HVAC Duct Construction Standards and as indicated.

C. Fabrication: Rigid and close-fitting of galvanized steel with sealing gaskets and quick fastening locking devices. For insulated ducts, install minimum 1 inch thick insulation with sheet metal cover.
   1. Less Than 12 inches Square: Secure with sash locks.
   2. Up to 18 inches Square: Provide two hinges and two sash locks.
   3. Up to 24 x 48 inches: Three hinges and two compression latches with outside and inside handles.
   4. Larger Sizes: Provide an additional hinge.

D. Access doors with sheet metal screw fasteners are not acceptable.

2.06 DUCT TEST HOLES

A. Temporary Test Holes: Cut or drill in ducts as required. Cap with neat patches, neoprene plugs, threaded plugs, or threaded or twist-on metal caps.

B. Permanent Test Holes: Factory fabricated, air tight flanged fittings with screw cap. Provide extended neck fittings to clear insulation.

2.07 FIRE DAMPERS

A. Manufacturers:
   1. Louvers & Dampers, Inc: www.louvers-dampers.com.
   2. Nailor Industries Inc: www.nailor.com.
   3. Ruskin Company: www.ruskin.com.
   4. Greenheck Fan Corporation: www.greenheck.com.
   5. Substitutions: See Section 01 60 00 - Product Requirements.

B. Fabricate in accordance with NFPA 90A and UL 555, and as indicated.

C. Ceiling Dampers: Galvanized steel, 22 gage frame and 16 gage flap, two layers 0.125 inch ceramic fiber on top side and one layer on bottom side for round flaps, with locking clip.

D. Horizontal Dampers: Galvanized steel, 22 gage frame, stainless steel closure spring, and lightweight, heat retardant non-asbestos fabric blanket.

E. Curtain Type Dampers: Galvanized steel with interlocking blades. Provide stainless steel closure springs and latches for horizontal installations or closure under air flow conditions. Configure with blades out of air stream except for 1.0 inch pressure class ducts up to 12 inches in height.

F. Multiple Blade Dampers: 16 gage galvanized steel frame and blades, oil-impregnated bronze or stainless steel sleeve bearings and plated steel axles, 1/8 x 1/2 inch plated steel concealed linkage, stainless steel closure spring, blade stops, and lock.

G. Fusible Links: UL 33, separate at 160 degrees F with adjustable link straps for combination fire/balancing dampers.

2.08 FLEXIBLE DUCT CONNECTIONS

A. Fabricate in accordance with SMACNA HVAC Duct Construction Standards and as indicated.

B. Flexible Duct Connections: Fabric crimped into metal edging strip.
   1. Fabric: UL listed fire-retardant neoprene coated woven glass fiber fabric to NFPA 90A, minimum density 30 oz per sq yd.
      a. Net Fabric Width: Approximately 6 inches wide.
   2. Metal: 3 inches wide, 24 gage thick galvanized steel.

C. Leaded Vinyl Sheet: Minimum 0.55 inch thick, 0.87 lbs per sq ft, 10 dB attenuation in 10 to 10,000 Hz range.

2.09 SMOKE DAMPERS

A. Manufacturers:
   1. Louvers & Dampers, Inc: www.louvers-dampers.com.
   2. Nailor Industries Inc: www.nailor.com.
   3. Ruskin Company: www.ruskin.com.
   4. Greenheck Fan Corporation: www.greenheck.com.
   5. Substitutions: See Section 01 60 00 - Product Requirements.

B. Fabricate in accordance with NFPA 90A and UL 555S, and as indicated.

C. Dampers: UL Class 1 multiple blade type fire damper, normally closed automatically operated by electric actuator.

D. Electro Thermal Link: Fusible link melting at 165 degrees F; 120 volts, single phase, 60 Hz; UL listed and labeled.

2.10 VOLUME CONTROL DAMPERS

A. Manufacturers:
   1. Louvers & Dampers, Inc: www.louvers-dampers.com.
   2. Nailor Industries Inc: www.nailor.com.
   3. Ruskin Company: www.ruskin.com.
   4. Greenheck Fan Corporation: www.greenheck.com.
   5. Substitutions: See Section 01 60 00 - Product Requirements.

B. Fabricate in accordance with SMACNA HVAC Duct Construction Standards and as indicated.

C. Splitter Dampers:
   1. Material: Same gage as duct to 24 inches size in either direction, and two gages heavier for sizes over 24 inches.
   2. Blade: Fabricate of double thickness sheet metal to streamline shape, secured with continuous hinge or rod.
   3. Operator: Minimum 1/4 inch diameter rod in self aligning, universal joint action, flanged bushing with set screw .

D. Single Blade Dampers: Fabricate for duct sizes up to 6 x 30 inch.

E. Multi-Blade Damper: Fabricate of opposed blade pattern with maximum blade sizes 8 x 72 inch. Assemble center and edge crimped blades in prime coated or galvanized channel frame with suitable hardware.

F. End Bearings: Except in round ducts 12 inches and smaller, provide end bearings. On multiple blade dampers, provide oil-impregnated nylon or sintered bronze bearings.

G. Quadrants:
   1. Provide locking, indicating quadrant regulators on single and multi-blade dampers.
   2. On insulated ducts mount quadrant regulators on stand-off mounting brackets, bases, or adapters.

PART 3 EXECUTION

3.01 PREPARATION

A. Verify that electric power is available and of the correct characteristics.

3.02 INSTALLATION

A. Install accessories in accordance with manufacturer's instructions, NFPA 90A, and follow SMACNA HVAC Duct Construction Standards. Refer to Section 23 31 00 for duct construction and pressure class.

B. Provide backdraft dampers on exhaust fans or exhaust ducts nearest to outside and where indicated.

C. Provide duct access doors for inspection and cleaning before and after filters, coils, fans, automatic dampers, at fire dampers, combination fire and smoke dampers, and elsewhere as indicated. Provide for cleaning kitchen exhaust ducts in accordance with NFPA 96. Provide minimum 8 x 8 inch size for hand access, 18 x 18 inch size for shoulder access, and as indicated. Provide 4 x 4 inch for balancing dampers only. Review locations prior to fabrication.

D. Provide duct test holes where indicated and required for testing and balancing purposes.

E. Provide fire dampers, combination fire and smoke dampers, and smoke dampers at locations indicated, where ducts and outlets pass through fire rated components, and where required by authorities having jurisdiction. Install with required perimeter mounting angles, sleeves, breakaway duct connections, corrosion resistant springs, bearings, bushings and hinges.

F. Install smoke dampers and combination smoke and fire dampers in accordance with NFPA 92.
   1. Smoke dampers shall be integrated into the "smoke purge control system". Dampers in the return ductwork shall be overridden to the open position when the smoke purge is activated.

G. Demonstrate re-setting of fire dampers to Red Clay Consolidated School District's representative.

H. At fans and motorized equipment associated with ducts, provide flexible duct connections immediately adjacent to the equipment.

I. At equipment supported by vibration isolators, provide flexible duct connections immediately adjacent to the equipment; see Section 22 05 48.

J. For fans developing static pressures of 5.0 inches and over, cover flexible connections with leaded vinyl sheet, held in place with metal straps.

K. Provide balancing dampers at points on supply, return, and exhaust systems where branches are taken from larger ducts as required for air balancing. Install minimum 2 duct widths from duct take-off.

L. Use splitter dampers only where indicated.

M. Provide balancing dampers on duct take-off to diffusers, grilles, and registers, regardless of whether dampers are specified as part of the diffuser, grille, or register assembly.

END OF SECTION

SECTION 23 34 23

HVAC POWER VENTILATORS

PART 1 GENERAL

1.01 SECTION INCLUDES

A. Kitchen Ventilation Systems / Roof exhausters.

B. Ceiling exhaust fans.

1.02 RELATED REQUIREMENTS

A. Section 23 05 13 - Common Motor Requirements for HVAC Equipment.

B. Section 23 05 48 - Vibration and Seismic Controls for HVAC Piping Equipment.

C. Section 23 33 00 - Air Duct Accessories: Backdraft dampers.

D. Section 26 27 17 - Equipment Wiring: Electrical characteristics and wiring connections.

1.03 REFERENCE STANDARDS

A. AMCA 99 - Standards Handbook; Air Movement and Control Association International, Inc..

B. AMCA 204 - Balance Quality and Vibration Levels for Fans.

C. AMCA 210 - Laboratory Methods of Testing Fans for Aerodynamic Performance Rating; Air Movement and Control Association International, Inc. (ANSI/AMCA 210, same as ANSI/ASHRAE 51).

D. AMCA (DIR) - [Directory of] Products Licensed Under AMCA International Certified Ratings Program; Air Movement and Control Association International, Inc..

E. AMCA 300 - Reverberant Room Method for Sound Testing of Fans; Air Movement and Control Association International, Inc..

F. AMCA 301 - Methods for Calculating Fan Sound Ratings from Laboratory Test Data; Air Movement and Control Association International, Inc..

G. NEMA MG 1 - Motors and Generators; National Electrical Manufacturers Association.

H. NFPA 96 - Standard for Ventilation Control and Fire Protection of Commercial Cooking Operations; National Fire Protection Association.

I. UL 705 - Power Ventilators; Underwriters Laboratories Inc..

1.04 SUBMITTALS

A. See Section 01 30 00 - Administrative Requirements, for submittal procedures.

B. Product Data: Provide data on fans and accessories including fan curves with specified operating point clearly plotted, power, RPM, sound power levels at rated capacity, and electrical characteristics and connection requirements.

C. Manufacturer's Instructions: Indicate installation instructions.

D. Maintenance Data: Include instructions for lubrication, motor and drive replacement, spare parts list, and wiring diagrams.

1.05 QUALITY ASSURANCE

A. Manufacturer Qualifications: Company specializing in manufacturing the type of products specified in this section, with minimum 5 years of documented experience.

B. Kitchen Range Hood Exhaust Fans: Comply with requirements of NFPA 96.

C. Products Requiring Electrical Connection: Listed and classified by Underwriters Laboratories Inc. as suitable for the purpose specified and indicated.

1.06 FIELD CONDITIONS

A. Permanent ventilators may be used for ventilation during construction only after ductwork is clean, filters are in place, bearings have been lubricated, and fan has been test run under observation.

1.07 EXTRA MATERIALS

A. See Section 01 60 00 - Product Requirements, for additional provisions.

B. Supply two sets of belts for each fan.

PART 2 PRODUCTS

2.01 MANUFACTURERS

A. Greenheck: www.greenheck.com.

B. Loren Cook Company: www.lorencook.com.

C. PennBarry: www.pennbarry.com.

D. American Coolair/ILG: www.coolair.com

E. Substitutions: See Section 01 60 00 - Product Requirements.

2.02 POWER VENTILATORS - GENERAL

A. Static and Dynamically Balanced: AMCA 204 - Balance Quality and Vibration Levels for Fans.

B. Performance Ratings: Determined in accordance with AMCA 210 and bearing the AMCA Certified Rating Seal.

C. Sound Ratings: AMCA 301, tested to AMCA 300, and bearing AMCA Certified Sound Rating Seal.

D. Fabrication: Conform to AMCA 99.

E. Electrical Components: Listed and classified by Underwriters Laboratories Inc. as suitable for the purpose specified and indicated.

2.03 ROOF VENTILATORS, KITCHEN VENTILATION SYSTEMS

A. Product Requirements:
   1. Performance Ratings: Determined in accordance with AMCA 210.
   2. Sound Ratings: AMCA 301, tested to AMCA 300.
   3. Fabrication: Conform to AMCA 99.
   4. UL Compliance: UL listed and labeled, designed, manufactured, and tested in accordance with UL 705.

B. Performance and Model: As indicated on drawings.
   1. Motor: Refer to Section 23 05 13.

C. Fan Unit: V-belt or direct driven as indicated, with spun aluminum housing; resilient mounted motor; 1/2 inch mesh, 0.62 inch thick aluminum wire birdscreen; square base to suit roof curb with continuous curb gaskets.

D. Fan Unit: V-belt or direct driven as indicated, with spun aluminum housing; resilient mounted motor; 1/2 inch mesh, 0.62 inch thick aluminum wire birdscreen; square base to suit roof curb with continuous curb gaskets.

E. Roof Curb: 20 inch high of galvanized steel with continuously welded seams, factory installed nailer strip.

F. Disconnect Switch: Factory wired, non-fusible, in housing for thermal overload protected motor.

G. Shunt Trip Breakers: Provide for each fan of 2,000 CFM or greater for interlock with Fire Alarm system.

H. Backdraft Damper: Gravity actuated, aluminum multiple blade construction, felt edged with offset hinge pin, nylon bearings, blades linked, and line voltage motor drive, power open, spring return.

I. Sheaves: Cast iron or steel, dynamically balanced, bored to fit shafts and keyed; variable and adjustable pitch motor sheave selected so required rpm is obtained with sheaves set at mid-position; fan shaft with self-aligning pre-lubricated ball bearings.

J. Make-up Air unit:
   1. Variable-volume direc-fired natural gas makeup air unit with spark ignition, discharge temperature control, and factory disconnect.

2.04 CABINET AND CEILING EXHAUST FANS

A. Performance: As Indicated on drawings.
   1. Motor: Refer to Section 23 05 13.

B. Centrifugal Fan Unit: V-belt or direct driven with galvanized steel housing lined with acoustic insulation, resilient mounted motor, gravity backdraft damper in discharge.

C. Disconnect Switch: Cord and plug in housing for thermal overload protected motor.

D. Grille: Molded white plastic or Aluminum with baked white enamel finish.

E. Sheaves: Cast iron or steel, dynamically balanced, bored to fit shafts and keyed; variable and adjustable pitch motor sheaves selected so required rpm is obtained with sheaves set at mid-position; fan shaft with self-aligning pre-lubricated ball bearings.

PART 3 EXECUTION

3.01 INSTALLATION

A. Install in accordance with manufacturer's instructions.

B. Secure roof or wall exhausters with aluminum lag screws to roof curb or structure.

C. Extend ducts to roof or wall exhausters into roof curb or structure. Counterflash duct to roof or wall opening.

D. Hung Cabinet Fans:
   1. Install fans with resilient mountings and flexible electrical leads. Refer to Section 23 05 48.

2. Install flexible connections specified in Section 23 33 00 between fan and ductwork. Ensure metal bands of connectors are parallel with minimum one inch flex between ductwork and fan while running.

E. Provide sheaves required for final air balance.

F. Install backdraft dampers on inlet to roof and wall exhausters.

G. Provide backdraft dampers on outlet from cabinet and ceiling exhauster fans and as indicated.

END OF SECTION

SECTION 23 37 00

AIR OUTLETS AND INLETS

PART 1 GENERAL

1.01 SECTION INCLUDES

A. Diffusers.

B. Registers/grilles.

C. Door grilles.

D. Louvers.

E. Goosenecks.

1.02 RELATED REQUIREMENTS

A. Section 09 90 00 - Painting and Coating: Painting of ducts visible behind outlets and inlets.

1.03 REFERENCE STANDARDS

A. AMCA 500-L - Laboratory Methods of Testing Louvers for Rating; Air Movement and Control Association International, Inc..

B. ARI 890 - Standard for Air Diffusers and Air Diffuser Assemblies; Air-Conditioning and Refrigeration Institute.

C. ASHRAE Std 70 - Method of Testing for Rating the Performance of Air Outlets and Inlets; American Society of Heating, Refrigerating and Air Conditioning Engineers, Inc..

D. SMACNA (DCS) - HVAC Duct Construction Standards.

1.04 SUBMITTALS

A. See Section 01 30 00 - Administrative Requirements for submittal procedures.

B. Product Data: Provide data for equipment required for this project. Review outlets and inlets as to size, finish, and type of mounting prior to submission. Submit schedule of outlets and inlets showing type, size, location, application, and noise level.

C. Samples: Submit one of each required air outlet and inlet type.

D. Project Record Documents: Record actual locations of air outlets and inlets.

1.05 QUALITY ASSURANCE

A. Test and rate air outlet and inlet performance in accordance with ASHRAE Std 70.

B. Test and rate louver performance in accordance with AMCA 500-L.

1.06 QUALITY ASSURANCE

A. Manufacturer Qualifications: Company specializing in manufacturing the type of products specified in this section, with minimum five years of documented experience.

1.07 MOCK-UP

A. Provide mock-up of typical exterior or exterior ceiling module with supply and return air outlets.

B. Locate where directed.

C. Mock-up may remain as part of the Work.

PART 2 PRODUCTS

2.01 MANUFACTURERS

A. Carnes Company HVAC: www.carnes.com.

B. Krueger: www.krueger-hvac.com.

C. Price Industries: www.price-hvac.com.

D. Titus: www.titus-hvac.com.

E. Tuttle and Bailey: www.tuttleandbailey.com.

F. Substitutions: See Section 01 60 00 - Product Requirements.

2.02 RECTANGULAR CEILING DIFFUSERS

A. Type: Square, stamped, multi-core diffuser to discharge air in 360 degree, one way, two way, three way or four way pattern as shown on drawings and with sectorizing baffles where indicated.

B. Frame: Surface mount or inverted T-bar as indicated on drawings. In plaster ceilings, provide plaster frame and ceiling frame.

C. Fabrication: Aluminum with baked enamel off-white finish.

D. Accessories: Radial opposed blade damper and multi-louvered equalizing grid with damper adjustable from diffuser face.

2.03 PERFORATED FACE CEILING DIFFUSERS

A. Type: Perforated face with fully adjustable pattern and removable face.

B. Frame: Surface mount or Inverted T-bar as indicated on drawings. In plaster ceilings, provide plaster frame and ceiling frame.

C. Fabrication: Steel with steel or aluminum frame and baked enamel off-white finish.

D. Accessories: Radial opposed blade damper and multi-louvered equalizing grid with damper adjustable from diffuser face.

2.04 CEILING SUPPLY REGISTERS/GRILLES

A. Type: Streamlined and individually adjustable curved blades to discharge air along face of grille, two-way deflection.

B. Frame: 1 inch margin with countersunk screw mounting and gasket.

C. Fabrication: Aluminum extrusions with factory off-white enamel or prime coat finish as indicated on drawings or selected by architect.

D. Damper: Integral, gang-operated, opposed blade type with removable key operator, operable from face.

2.05 CEILING EXHAUST AND RETURN REGISTERS/GRILLES

A. Type: Streamlined blades, 3/4 inch minimum depth, 3/4 inch maximum spacing, with blades set at 45 degrees, horizontal face.

B. Frame: 1 inch margin with countersunk screw mounting.

C. Fabrication: Aluminum extrusions, with factory off-white enamel, baked enamel, or prime coated finish as indicated on drawings or selected by architect.

D. Damper: Integral, gang-operated, opposed blade type with removable key operator, operable from face where not individually connected to exhaust fans.

E. Gymnasiums: Provide front pivoted or welded in place blades, securely fastened to be immobile.

2.06 CEILING GRID CORE EXHAUST AND RETURN REGISTERS/GRILLES

A. Type: Fixed grilles of 1/2 x 1/2 x 1/2 inch louvers.

B. Fabrication: Acrylic plastic with off-white finish.

C. Frame: Channel lay-in frame for suspended grid ceilings.

D. Damper: Integral, gang-operated, opposed blade type with removable key operator, operable from face.

2.07 WALL SUPPLY REGISTERS/GRILLES

A. Type: Streamlined and individually adjustable blades, 3/4 inch minimum depth, 3/4 inch maximum spacing with spring or other device to set blades, horizontal face, double deflection.

B. Frame: 1 inch margin with countersunk screw mounting and gasket.

C. Fabrication: Aluminum extrusions, with factory off-white enamel, baked enamel, prime coat or clear lacquer finish as indicated on drawings or selected by architect.

D. Damper: Integral, gang-operated opposed blade type with removable key operator, operable from face.

E. Gymnasiums: Provide front pivoted or welded in place blades, securely fastened to be immobile.

2.08 WALL EXHAUST AND RETURN REGISTERS/GRILLES

A. Type: Streamlined blades, 3/4 inch minimum depth, 3/4 inch maximum spacing, with spring or other device to set blades, horizontal face.

B. Frame: 1 inch margin with countersunk screw mounting.

C. Fabrication: Aluminum extrusions, with factory off-white enamel, baked enamel, prime coated or clear lacquer finish as indicated on drawings or selected by architect.

D. Damper: Integral, gang-operated, opposed blade type with removable key operator, operable from face.

E. Gymnasiums: Provide front pivoted or welded in place blades, securely fastened to be immobile.

2.09 WALL GRID CORE EXHAUST AND RETURN REGISTERS/GRILLES

A. Type: Fixed grilles of 1/2 x 1/2 x 1/2 inch louvers.

B. Fabrication: Aluminum with factory clear lacquer, off-white enamel or baked enamel finish as indicated on drawings or selected by architect.

C. Frame: 1 inch margin with countersunk screw mounting.

D. Damper: Integral, gang-operated, opposed blade type with removable key operator, operable from face.

2.10 DOOR GRILLES

A. Type: V-shaped louvers of 20 gage thick steel, 1 inch deep on 1/2 inch centers.

B. Frame: 20 gage steel with auxiliary frame to give finished appearance on both sides of door, with factory prime coat finish.

2.11 LOUVERS

A. Type: 4 inch or 6 inch deep as indicated on drawings with blades on 45 degree slope, heavy channel frame, 1/2 inch square mesh screen over exhaust and 1/2 inch square mesh screen over intake.

B. Fabrication: 12 gage thick extruded aluminum, welded assembly, with factory prime coat, baked enamel, anodized or fluoropolymer spray finish as indicated on drawings or selected by architect.

C. Mounting: Furnish with exterior angle flange, screw holes in jambs or masonry strap anchors for installation.

2.12 GOOSENECKS

A. Fabricate in accordance with SMACNA HVAC Duct Construction Standards of minimum 18 gage galvanized steel.

B. Mount on minimum 12 inch high curb base where size exceeds 9 x 9 inch.

PART 3 EXECUTION

3.01 INSTALLATION

A. Install in accordance with manufacturer's instructions.

B. Check location of outlets and inlets and make necessary adjustments in position to conform with architectural features, symmetry, and lighting arrangement.

C. Install diffusers to ductwork with air tight connection.

D. Provide balancing dampers on duct take-off to diffusers, and grilles and registers, despite whether dampers are specified as part of the diffuser, or grille and register assembly.

E. Paint ductwork visible behind air outlets and inlets matte black. Refer to Section 09 90 00.

3.02 AIR OUTLET AND INLET SCHEDULE

A. See Drawings

END OF SECTION

SECTION 23 72 23

PACKAGED AIR-TO-AIR ENERGY RECOVERY UNITS

PART 1 GENERAL

1.01 REFERENCE STANDARDS

A. AHRI 1060 I-P - Performance Rating of Air-to-Air Heat Exchangers for Energy Recovery Ventilation Equipment; Air-Conditioning, Heating, and Refrigeration Institute.

B. ASHRAE Std 52.2 - Method of Testing General Ventilation Air-Cleaning Devices for Removal Efficiency by Particle Size.

C. ASHRAE Std 84 - Method of Testing Air to Air Heat Exchangers.

D. ASTM E84 - Standard Test Method for Surface Burning Characteristics of Building Materials.

E. NFPA 70 - National Electrical Code.

F. NFPA 90A - Standard for the Installation of Air-Conditioning and Ventilating Systems.

G. NFPA 255 - Standard Method of Test of Surface Burning Characteristics of Building Materials

H. UL 723 - Standard for Test for Surface Burning Characteristics of Building Materials.

PART 2 PRODUCTS

2.01 MANUFACTURERS

A. Energy Recovery Ventilators:
   1. Renew Aire: www.renewaire.com.
   2. Innovent: www.innoventair.com
   3. Substitutions: See Section 01 60 00 - Product Requirements.

2.02 ENERGY RECOVERY UNITS

A. Energy Recovery Units: Fixed plate cross-flow energy exchange type (hydroscopic resin) type; prefabricated packaged system designed by manufacturer.
   1. Access: Hinged access panels on front. Pressure taps provided.
   2. Lifting holes at the unit base.
   3. Permanent name plate listing manufacturer mounted inside door near electrical panel.

2.03 CASING

A. Wall, Floor, and Roof Panels:
   1. Construction: 1 inch thick, double wall box construction, with formed edges of exterior wall overlapping formed edges of interior wall.
   2. Exterior Wall: galvanized steel sheet.
      a. 20 gage galvanized steel.
   3. Insulation:
      a. 1 inch insulated fiberglass board insulation.
      b. All insulation sealed with foil/scrim facing leaving no exposed insulation to the airstream.
      c. Flame Spread Index: 25, maximum, when tested in accordance with ASTM E84, NFPA 255, and UL 723.
      d. Smoke Developed Index: 50, maximum, when tested in accordance with ASTM E84, NFPA 255, and UL 723.

4. Panel Joints: 20 gauge steel with lapped corners and zinc-plated screws.
5. Isolation and Seal: Form continuous, thermally isolated, weather tight seal between inner wall of panels and structural framing with closed cell PVC foam gasketing.
6. Seams: Sealed, requiring no caulking at job site.

B. Access Panels: Provide access to components through a large, tightly sealed and easily removable panel.

C. Doors:
1. Construct doors of same construction and thickness as wall panels.
2. Hardware:
a. Corrosion-resistant.

2.04 FANS

A. Provide separate fans for exhaust and supply blowers.

B. Fans:
1. Individually driven with a dedicated motor.

C. Bearings:
1. Pillow block.
2. Bearings: Permanently lubricated sealed ball bearings.
3. Rated for not less than 200,000 hours of operation with accessible greased fittings.

D. Housings: 12 gage aluminized steel with plenums integral to general housing and constructed to Class 1 fan standards.

E. Motors:
1. Motors: Open drip proof or ECM direct drive as scheduled.
2. Efficiency: Premium.
3. Speed: Variable.
4. Control: Variable Frequency Drive.
5. Fan Motor: Thermal overload protected.
6. Fan Motor: UL listed and labeled.

F. Drives:
1. Fans: Belt driven or direct as scheduled.
2. Sheaves: Variable.
3. Service Factor: 1.2.

2.05 TOTAL ENERGY RECOVERY MEDIA

A.

B. Transfer heat and humidity from one air stream to the other with no carryover of the exhaust air into the supply air stream.

C. Effectiveness: Rated in accordance with ASHRAE Std 84 and AHRI 1060.

D. Flame Spread Index: 25, maximum, when tested in accordance with ASTM E84, NFPA 255, and UL 723.

E. Smoke Developed Index: 50, maximum, when tested in accordance with ASTM E84, NFPA 255, and UL 723.

F. Energy Recovery Media Facing:
1. Conform to NFPA 90A.

2.06 FILTERS

A. Efficiency: 13 MERV.

B. Exhaust and Fresh Air Streams: MERV 13 filters constructed to meet ASHRAE Std 52.2.

C. Mount 1/2 inches thick permanent aluminum washable type filter in the outside air hood and in the return plenum air.

2.07 DAMPERS

A. Motorized Dampers: Provide motorized dampers at outside air inlet, exhaust air outlet, and supply air outlet.
   1. Type: Motorized two position low-leak.
   2. Blades: Insulated, single blade damper.

2.08 VIBRATION ISOLATION

A. Vibration Isolation: Provide whole unit vibration isolation with the energy recovery unit assembly.

B. Construct with appropriately-sized, seismic-rated, corrosion-resistant captive-spring isolators.

2.09 POWER AND CONTROLS

A. Motor Control Panels: UL listed.

B. Include necessary motor starters, fuses, transformers and overload protection according to NFPA 70.

C. Install wiring in accordance with NFPA 70.

2.10 SERVICE ACCESSORIES

A. Switch: 2 type.
   1. Two Position Type: Service and Operate.

B. Electrical Components: Factory wired for single point power connection.
   1. Protect all integral wires and connections.
   2. Electrical Components: UL Listed.

PART 3 EXECUTION

3.01 EXAMINATION

3.02 INSTALLATION

A. Provide openings for suitable ductwork connection.

3.03 SYSTEM STARTUP

A. Provide services of manufacturer's authorized representative to provide start up of unit.

3.04 CLEANING

A. Clean filters, air plenums, interior and exposed-to-view surfaces prior to Substantial Completion.

END OF SECTION

SECTION 23 74 13

PACKAGED OUTDOOR CENTRAL-STATION AIR-HANDLING UNITS

PART 1 GENERAL

1.01 SECTION INCLUDES

A. Packaged roof top unit.

B. Unit controls.

C. Remote panel.

D. Mounting curb and base.

E. Maintenance service.

1.02 RELATED REQUIREMENTS

A. Section 07 62 00 - Sheet Metal Flashing and Trim.

B. Section 23 05 13 - Common motor requirements for HVAC Equipment.

C. Section 23 05 48 - Vibration and Seismic Controls for HVAC Piping and Equipment.

D. Section 23 40 00 - HVAC Air Cleaning Devices.

E. Section 23 09 13 - Instrumentation and Control Devices for HVAC: Control components, time clocks.

F. Section 23 09 13 - Instrumentation and Control Devices for HVAC: Installation of thermostats and other controls components.

G. Section 26 27 17 - Equipment Wiring: Installation and wiring of thermostats and other controls components; wiring from unit terminal strip to remote panel.

H. Section 26 27 17 - Equipment Wiring: Electrical characteristics and wiring connections.

1.03 REFERENCE STANDARDS

A. AHRI 210/240 - Standard for Performance Rating of Unitary Air Conditioning and Air-Source Heat Pump Equipment; Air-Conditioning, Heating, and Refrigeration Institute.

B. AHRI 270 - Sound Rating of Outdoor Unitary Equipment; Air-Conditioning, Heating, and Refrigeration Institute.

C. NFPA 90A - Standard for the Installation of Air-Conditioning and Ventilation Systems; National Fire Protection Association.

1.04 SUBMITTALS

A. See Section 01 33 00 - Administrative Requirements, for submittal procedures.

B. Product Data: Provide capacity and dimensions of manufactured products and assemblies required for this project. Indicate electrical service with electrical characteristics and connection requirements, and duct connections.

C. Shop Drawings: Indicate capacity and dimensions of manufactured products and assemblies required for this project. Indicate electrical service with electrical characteristics and connection requirements, and duct connections.

D. Manufacturer's Instructions: Indicate assembly, support details, connection requirements, and include start-up instructions.

E. Operation and Maintenance Data: Include manufacturer's descriptive literature, operating instructions, installation instructions, maintenance and repair data, and parts listing.

F. Warranty: Submit manufacturer's warranty and ensure forms have been filled out in Red Clay Consolidated School District's name and registered with manufacturer.

1.05 QUALITY ASSURANCE

A. Manufacturer Qualifications: Company specializing in manufacturing the type of products specified in this section, with minimum five years of documented experience.

B. Products Requiring Electrical Connection: Listed and classified by Underwriters Laboratories Inc. as suitable for the purpose specified and indicated.

1.06 DELIVERY, STORAGE, AND HANDLING

A. Protect units from physical damage by storing off site until roof mounting curbs are in place, ready for immediate installation of units.

1.07 WARRANTY

A. Provide a five year warranty to include coverage for refrigeration compressors and heat exchangers.

1.08 MAINTENANCE SERVICE

A. Furnish service and maintenance of packaged roof top units for one year from Date of Substantial Completion.

B. Provide maintenance service with a two month interval as maximum time period between calls. Provide 24-hour emergency service on breakdowns and malfunctions.

C. Include maintenance items as outlined in manufacturer's operating and maintenance data, including minimum of six filter replacements, minimum of one fan belt replacement, and controls check-out, adjustments, and recalibration.

D. Submit copy of service call work order or report, and include description of work performed.

1.09 EXTRA MATERIALS

A. Provide two sets of filters.

PART 2 PRODUCTS

2.01 MANUFACTURERS

A. Modine Corporation

B. York/JCI

C. Trane Corporation

D. McQuay

E. Valent Incorporated

F. AAON Corporation.

2.02 AIR CONDITIONING UNITS

A. General: Roof or ground mounted packaged units having gas burner as scheduled and electric refrigeration.

B. Description: Self-contained, packaged, factory assembled and prewired, consisting of cabinet and frame, supply fan, return fan, heat exchanger and burner,, energy recovery wheel (where noted in the schedule), factory-mounted controls, air filters, hot water heating coil, refrigerant cooling coil and variable-speed compressors and hot-gas reheat circuits, condenser coil and condenser fan as scheduled.

C. Disconnect Switch: Factory mount disconnect switch on equipment under provisions of Section 26 27 17.

2.03 FABRICATION

A. Cabinet: Galvanized steel with baked enamel finish, including access doors with piano hinges and locking handle. Structural members shall be minimum 18 gage, with access doors or panels of minimum 20 gage.

B. Insulation: two inch thick minimum glass fiber or injected foam, double-walled unit construction.

C. Supply and Return and Exhaust Fan as scheduled: Backward inclined or airfoil type, resiliently mounted with V-belt drive and adjustable variable pitch motor pulley, and rubber isolated hinge mounted high efficiency motor or direct drive as indicated. Isolate complete fan assembly. Provide factory-mounted variable-frequency drives for all fan motors.

D. Air Filters: Minimum efficiency reporting value (MERV) of at least 10.

E. Roof Mounting Curb: Custom side-discharge 40" high galvanized steel, channel frame with gaskets, nailer strips

2.04 BURNER

A. Gas Burner: Forced draft type burner with adjustable combustion air supply, pressure regulator, gas valves, manual shut-off, intermittent spark or glow coil ignition, flame sensing device, and automatic 100 percent shut-off pilot. Provide turndown ratio as indicated in the schedule. Provide condensing burners as indicated in schedule.

B. Gas Burner Safety Controls: Energize ignition, limit time for establishment of flame, prevent opening of gas valve until pilot flame is proven, stop gas flow on ignition failure, energize blower motor, and after air flow proven and slight delay, allow gas valve to open.

C. High Limit Control: Temperature sensor with fixed stop at maximum permissible setting, de-energize burner on excessive bonnet temperature and energize burner when temperature drops to lower safe value.

D. Supply Fan Control: Temperature sensor sensing bonnet temperatures and independent of burner controls, with provisions for continuous fan operation.

2.05 EVAPORATOR OR INDOOR COILS

A. Provide copper tube aluminum fin coil assembly with galvanized drain pan and connection for cooling coils.

B. Provide thermostatic expansion valves for units of 6 tons capacity and less, and thermostatic expansion valves and alternate row circuiting for units 7.5 tons cooling capacity and larger.

2.06 COMPRESSOR

A. Provide hermetic compressors, 3600 rpm maximum, resiliently mounted with positive lubrication, crankcase heater, high and low pressure safety controls, motor overload protection, suction and discharge service valves and gage ports, and filter drier.

B. Five minute timed off circuit to delay compressor start.

C. Outdoor thermostat to energize compressor above 35 degrees F ambient.

D. Provide step capacity control by variable-speed scroll technology and/or adjusting variable-speed compressors.

E. Provide hot-gas reheat coil for humidity control.

2.07 CONDENSER OR OUTDOOR COIL

A. Provide copper tube aluminum or copper fin coil assembly with subcooling rows and coil guard.

B. Provide direct drive propeller fans, resiliently mounted with fan guard, motor overload protection, wired to operate with compressor. Provide high efficiency fan motors.

C. Provide refrigerant pressure switches to cycle condenser fans.

2.08 MIXED AIR CASING

A. Dampers: Provide outside, return, and relief dampers with damper operator and control package to automatically vary outside air quantity. Outside air damper to fall to closed position.

B. Gaskets: Provide tight fitting dampers with edge gaskets.

C. Damper Operator, Units 7.5 Ton Cooling Capacity and Larger: 24 volt with gear train sealed in oil with spring return on.

D. Outdoor airflow monitoring station: Provided at intake of the unit.

E. Mixed Air Controls: Maintain selected supply air temperature and return dampers to minimum position on call for heating and above 70 degrees (F) ambient, or when ambient air enthalpy exceeds return air enthalpy.

2.09 OPERATING CONTROLS

A. Provide factory controller and all necessary sensors and components for operation of refrigerant system, fan VFDs based on static-pressure feedback, energy recovery wheel, humidity control function, and economizer function. The humidity control (dehumidification sequence) shall be capable of being enabled when the unit is in both heating and cooling modes. The humidistat setpoint shall govern control of this sequence.

B. Provide BACnet interface on unit for connection of operating controls for BAS control. Control shall allow for modulating heating via the gas-fired burner and modulating stages cooling, fan, and damper control. See section 23 09 93 for required data to be relayed to the BAS for monitoring and control.

C. Provide remote mounted fan control switch for smoke-purge for each unit (on-auto) to activate only the exhaust fan at each unit, keep the outdoor air damper closed, and de-engerize the energy wheel.

D. See Specification Section 230993 - Sequence Of Operations, paragraphs 3.08 and 3.11 for required operatiing capabilities of the units.

2.10 HEAT RECOVERY

A. The heat recovery module shall be provided as shown on the drawing and shall have a factory mounted and tested energy recovery wheel. The energy recovery wheel shall be mounted in a rigid frame containing the wheel drive motor, drive belt, wheel seats and bearings.

B. The energy recovery cassette shall be rated in accordance with ARI Standard 1060 and shall bear the ARI certification symbol.

C. The energy recovery cassette shall contain a total energy heat wheel constructed of a light weight polymer material with permanently bonded desiccant coating. The energy recovery wheel media shall be capable of removal from the cassette and be cleanable using hot water or light detergent without degrading the latent efficiency.

PART 3 EXECUTION

3.01 EXAMINATION

A. Verify that roof is ready to receive work and opening dimensions are as indicated on shop drawings.or illustrated by the manufacturer.

B. Verify that proper power supply is available.

3.02 INSTALLATION

A. Install in accordance with manufacturer's instructions.

B. Install in accordance with NFPA 90A.

C. Mount units on factory built roof mounting curb providing watertight enclosure to protect ductwork and utility services. Install roof mounting curb level.

D. Locate remote panels where identified in field coordination meeting.

E. Tie unit into BAS as specified.

3.03 SYSTEM STARTUP

A. Prepare and start equipment. Adjust for proper operation.

3.04 CLOSEOUT ACTIVITIES

A. Demonstrate operation to Owner's maintenance personnel.

3.05 MAINTENANCE

A. Provide service and maintenance of packaged roof top units for one year year from Date of Substantial Completion.

B. Provide routine maintenance service with a three month interval as maximum time period between calls.

C. Include maintenance items as outlined in manufacturer's operating and maintenance data, including minimum of six filter replacements, minimum of one fan belt replacement, and controls check-out, adjustments, and recalibration.

D. After each service call, submit copy of service call work order or report that includes

description of work performed.

END OF SECTION

SECTION 23 81 27

SMALL SPLIT-SYSTEM HEATING AND COOLING

PART 1 GENERAL

1.01 SECTION INCLUDES

A. Air cooled condensing units.

B. Indoor ductless fan & coil units.

C. Controls.

1.02 RELATED REQUIREMENTS

A. Section 03 30 00 - Cast-in-Place Concrete: Mounting pad for outdoor unit.

B. Section 22 10 05 - Plumbing Piping: Indoor coil condensate drain.

C. Section 23 09 13 - Instrumentation and Control Devices for HVAC: Thermostats, humidistats, time clocks.

D. Section 23 09 23 - Direct Digital Controls Systems for HVAC.

E. Section 23 09 93 - Sequence of Operations for HVAC.

F. Section 26 27 17 - Equipment Wiring: Electrical characteristics and wiring connections and installation and wiring of thermostats and other controls components.

1.03 REFERENCE STANDARDS

A. AHRI 270 - Sound Rating of Outdoor Unitary Equipment; Air-Conditioning, Heating, and Refrigeration Institute.

B. AHRI 520 - Performance Rating of Positive Displacement Condensing Units; Air-Conditioning, Heating, and Refrigeration Institute.

C. AHRI 610 - Performance Rating of Central System Humidifiers for Residential Applications; Air Conditioning, Heating, and Refrigeration Institute.

D. ASHRAE Std 15 - Safety Standard for Refrigeration Systems; American Society of Heating, Refrigerating and Air-Conditioning Engineers, Inc. (ANSI/ASHRAE Std 15).

E. ASHRAE Std 23.1 - Methods of Testing for Rating Positive Displacement Refrigerant Compressors and Condensing Units; American Society of Heating, Refrigerating and Air-Conditioning Engineers, Inc..

F. ASHRAE Std 52.1 - Gravimetric and Dust-Spot Procedures for Testing Air-Cleaning Devices Used in General Ventilation for Removing Particulate Matter; American Society of Heating, Refrigerating and Air-Conditioning Engineers, Inc..

G. ASHRAE Std 90.1 - Energy Standard for Buildings Except Low-Rise Residential Buildings; American Society of Heating, Refrigerating and Air-Conditioning Engineers, Inc. (ANSI/AHSRAE/IESNA Std 90.1).

H. ASHRAE Std 90.2 - Energy-Efficient Design of New Low-Rise Residential Buildings; American Society of Heating, Refrigerating and Air-Conditioning Engineers, Inc..

I. ASHRAE Std 103 - Methods of Testing for Annual Fuel Utilization Efficiency of Residential Central Furnaces and Boilers; American Society of Heating, Refrigerating and Air-Conditioning Engineers, Inc..

J. NEMA MG 1 - Motors and Generators; National Electrical Manufacturers Association.

K. NFPA 31 - Standard for the Installation of Oil Burning Equipment; National Fire Protection Association.

L. NFPA 90A - Standard for the Installation of Air-Conditioning and Ventilating Systems; National Fire Protection Association.

M. NFPA 90B - Standard for the Installation of Warm Air Heating and Air Conditioning Systems; National Fire Protection Association.

N. NFPA 211 - Standard for Chimneys, Fireplaces, Vents, and Solid Fuel-Burning Appliances; National Fire Protection Association.

O. UL 207 - Refrigerant-Containing Components and Accessories, Nonelectrical; Underwriters Laboratories Inc..

1.04 SUBMITTALS

A. See Section 01 30 00 - Administrative Requirements, for submittal procedures.

B. Product Data: Provide rated capacities, weights, accessories, electrical nameplate data, and wiring diagrams.

C. Shop Drawings: Indicate assembly, required clearances, and location and size of field connections.

D. Design Data: Indicate refrigerant pipe sizing.

E. Manufacturer's Instructions: Indicate rigging, assembly, and installation instructions.

F. Project Record Documents: Record actual locations of components and connections.

G. Operation and Maintenance Data: Include manufacturer's descriptive literature, operating instructions, installation instructions, maintenance and repair data, and parts listing.

H. Warranty: Submit manufacturers warranty and ensure forms have been filled out in Red Clay Consolidated School District s name and registered with manufacturer.

1.05 QUALITY ASSURANCE

A. Manufacturer Qualifications: Company specializing in manufacturing the type of products specified in this section, with minimum 10 years of documented experience.

B. Installer Qualifications: Company specializing in performing the work of this section with minimum 5 years of documented experience and approved by manufacturer.

1.06 WARRANTY

A. See Section 01 78 00 - Closeout Submittals, for additional warranty requirements.

B. Provide five year manufacturers warranty for heat exchangers, condensing units, and compressors.

C. Provide five year manufacturers warranty for electronic air cleaners.

1.07 EXTRA MATERIALS

A. See Section 01 60 00 - Project Requirements, for additional provisions.

B. Provide two filters for each indoor unit.

C. Provide two pilot thermocouples.

PART 2 PRODUCTS

2.01 MANUFACTURERS

A. Sanyo:

B. Mitsubishi:

C. LG:

D. Daikin.

E. Substitutions: See Section 01 60 00 - Product Requirements.

2.02 SYSTEM DESIGN

A. Split-System Heating and Cooling Units: Self-contained, packaged, matched factory-engineered and assembled, pre-wired indoor and outdoor units; UL listed.
   1. Heating and Cooling: Air-source electric heat pump located in outdoor unit with evaporator coil in central ducted indoor unit.
   2. Heating: Natural gas fired; As scheduled.
   3. Cooling: Outdoor electric condensing unit with evaporator coil in central ducted indoor unit or coils in multiple .
   4. Provide refrigerant lines internal to units and between indoor and outdoor units, factory cleaned, dried, pressurized and sealed, with insulated suction line.

B. Performance Requirements: See Drawings for additional requirements.
   1. Efficiency: Energy Efficiency Rating (EER)/Coefficient of Performance (COP) not less than requirements of ASHRAE Std 90.1; seasonal efficiency to ASHRAE Std 103.

2.03 INDOOR UNITS FOR DUCTED SYSTEMS

A. Indoor Units: Self-contained, packaged, factory assembled, pre-wired unit consisting of cabinet, supply fan, heating and cooling element(s), controls, and accessories; wired for single power connection with control transformer.
   1. Air Flow Configuration: Counterflow, with additional steel base; counterflow or horizontal as scheduled.
   2. Cabinet: Steel with baked enamel finish, easily removed and secured access doors with safety interlock switches, glass fiber insulation with reflective liner.

B. Supply Fan: Centrifugal type rubber mounted with direct or belt drive with adjustable variable pitch motor pulley.
   1. Motor: NEMA MG 1; 1750 rpm single speed or multiple speed as scheduled permanently lubricated, hinge mounted.
   2. Motor Electrical Characteristics:

C. Air Filters: 1 inch thick glass fiber, disposable type arranged for easy replacement.

D. Evaporator Coils: Copper tube aluminum fin assembly, galvanized or polymer drain pan sloped in all directions to drain, drain connection, refrigerant piping connections, restricted distributor or thermostatic expansion valve.
   1. Construction and Ratings: In accordance with AHRI 210/240 and UL listed.
   2. Manufacturers: System manufacturer.

2.04 INDOOR UNITS FOR DUCTLESS SYSTEMS

A. Indoor Units: Self-contained, packaged, factory assembled, pre-wired unit consisting of cabinet, supply fan, evaporator coil, and controls; wired for single power connection with control transformer.

B. Evaporator Coils: Copper tube aluminum fin assembly, galvanized or polymer drain pan sloped in all directions to drain, drain connection, refrigerant piping connections, restricted distributor or thermostatic expansion valve.
   1. Construction and Ratings: In accordance with AHRI 210/240 and UL listed.
   2. Manufacturer: System manufacturer.

2.05 OUTDOOR UNITS

A. Outdoor Units: Self-contained, packaged, pre-wired unit consisting of cabinet, with compressor and condenser.
   1. Cabinet: Steel with baked enamel finish, easily removed and secured access doors with safety interlock switches, glass fiber insulation with reflective liner.
   2. Construction and Ratings: In accordance with AHRI 210/240 with testing in accordance with ASHRAE Std 23 and UL listed.

B. Compressor: As scheduled ARI 520; hermetic, single or two speed 1800 and 3600 rpm, resiliently mounted integral with condenser, with positive lubrication, crankcase heater, high pressure control, motor overload protection, service valves and drier. Provide time delay control to prevent short cycling and rapid speed changes.

C. Air Cooled Condenser: ARI 520; Aluminum fin and copper tube coil, with direct drive axial propeller fan resiliently mounted, galvanized fan guard.

D. Accessories: Filter drier, high pressure switch (manual reset), low pressure switch (automatic reset), service valves and gage ports, thermometer well (in liquid line).
   1. Provide thermostatic expansion valves.
   2. Provide heat pump reversing valves.

E. Operating Controls:
   1. Control by room thermostat to maintain room temperature setting.
   2. Low Ambient Kit: Provide refrigerant pressure switch to cycle condenser fan on when condenser refrigerant pressure is above 285 psig and off when pressure drops below 140 psig for operation to 0 degrees F.

F. Mounting Pad: Minimum square; minimum of two located under cabinet feet.

2.06 ACCESSORY EQUIPMENT

A. Room Humidistat: Electric, adjustable, to energize humidifier when fan operating, to maintain setting.

B. Room Thermostat: Wall-mounted, electric solid state microcomputer based room thermostat with remote sensor to maintain temperature setting; low-voltage; with following features:
   1. System selector switch (heat-off-cool) and fan control switch (auto-on).
   2. Automatic switching from heating to cooling.
   3. Preferential rate control to minimize overshoot and deviation from setpoint.
   4. Set-up for four separate temperatures per day.
   5. Instant override of setpoint for continuous or timed period from one hour to 31 days.
   6. Short cycle protection.
   7. Programming based on every day of the week.

8. Selection features including degree F or degree C display, 12 or 24 hour clock, keyboard disable, remote sensor, fan on-auto.
9. Battery replacement without program loss.
10. Thermostat display:
    a. Time of day.
    b. Actual room temperature.
    c. Programmed temperature.
    d. Programmed time.
    e. Duration of timed override.
    f. Day of week.
    g. System mode indication: heating, cooling, fan auto, off, and on, auto or on, off.
11. Manufacturers:
    a. Matching unit manufacturer or provided by Building Automation System vendor..

PART 3 EXECUTION

3.01 EXAMINATION

A. Verify that substrates are ready for installation of units and openings are as indicated on shop drawings.

B. Verify that proper power supply is available and in correct location.

C. Verify that proper fuel supply is available for connection.

D. Verify that water supply is available for humidifier.

3.02 INSTALLATION

A. Install in accordance with manufacturer's instructions and requirements of local authorities having jurisdiction.

B. Install in accordance with NFPA 90A and NFPA 90B.

C. Provide vent connections in accordance with NFPA 211.

D. Install refrigeration systems in accordance with ASHRAE Std 15.

E. Mount counterflow furnaces installed on combustible floors on additive base.

END OF SECTION

SECTION 23 81 29

VARIABLE REFRIGERANT VOLUME (VRV, VRF) HVAC SYSTEM

PART 1 GENERAL

1.01 SECTION INCLUDES

A. Variable refrigerant volume HVAC system includes:
   1. Outdoor/Condensing unit(s).
   2. Indoor/Evaporator units.
   3. Branch selector units.
   4. Refrigerant piping.
   5. Control panels.
   6. Control wiring.

1.02 RELATED REQUIREMENTS

A. Section 01 23 00 - Alternates: List of alternates relevant to this section.

B. Section 01 79 00 - Demonstration and Training.

C. Section 01 91 13 - General Commissioning Requirements.

D. Section 01 91 14 - Commissioning Authority Responsibilities.

E. Section 22 10 05 - Plumbing Piping: Condensate drain piping.

F. Section 22 30 00 - Plumbing Equipment: Cooling condensate removal pumps.

G. Section 23 08 00 - Commissioning of HVAC.

H. Section 23 23 00 - Refrigerant Piping and Specialties: Additional requirements for refrigerant piping system.

I. Section 26 27 17 - Equipment Wiring: Power connections to equipment.
   1. Provide separate power connections for each unit of equipment.

J. Section 23 09 23 and 23 09 93: Building automation system providing centralized control of this system.

1.03 REFERENCE STANDARDS

A. AHRI 210/240 - Standard for Performance Rating of Unitary Air-Conditioning and Air-Source Heat Pump Equipment; Air-Conditioning, Heating, and Refrigeration Institute.

B. ASHRAE (FUND) - ASHRAE Handbook - Fundamentals.

C. ASHRAE Std 90.1 - Energy Standard for Buildings Except Low-Rise Residential Buildings; American Society of Heating, Refrigerating, and Air-Conditioning Engineers, Inc (ANSI/ASHRAE/IESNA Std 90.1).

D. NFPA 70 - National Electrical Code; National Fire Protection Association.

E. UL 1995 - Heating and Cooling Equipment.

1.04 ADMINISTRATIVE REQUIREMENTS

A. Preinstallation Meeting: Conduct a preinstallation meeting one week prior to the start of the work of this section; require attendance by all affected installers.

1.05 SUBMITTALS

A. See Section 01 30 00 - Administrative Requirements, for submittal procedures.

B. Pre-Bid Submittals: For proposed substitute systems/products, as defined in PART 2, and alternate systems/products, as defined above, proposer shall submit all data described in this article, under the terms given for substitutions stated in PART 2.

C. Design Data:
1. Provide design calculations showing that system will achieve performance specified.
2. Provide design data required by ASHRAE 90.1.

D. Product Data: Submit manufacturer's standard data sheets showing the following for each item of equipment, marked to correlate to equipment item markings shown in the contract documents:
1. Outdoor/Central Units:
   a. Refrigerant Type and Size of Charge.
   b. Cooling Capacity: Btu/h.
   c. Heating Capacity: Btu/h.
   d. Cooling Input Power: Btu/h.
   e. Heating Input Power: Btu/h.
   f. Operating Temperature Range, Cooling and Heating.
   g. Air Flow: Cubic feet per minute.
   h. Fan Curves.
   i. External Static Pressure (ESP): Inches WG.
   j. Sound Pressure Level: dB(A).
   k. Electrical Data:
      1) Maximum Circuit Amps (MCA).
      2) Maximum Fuse Amps (MFA).
      3) Maximum Starting Current (MSC).
      4) Full Load Amps (FLA).
      5) Total Over Current Amps (TOCA).
      6) Fan Motor: HP.
   l. Weight and Dimensions.
   m. Maximum number of indoor units that can be served.
   n. Maximum refrigerant piping run from outdoor/condenser unit to indoor/evaporator unit.
   o. Maximum height difference between outdoor/condenser unit to indoor/evaporator unit, both above and below.
   p. Control Options.
2. Indoor/Evaporator Units:
   a. Cooling Capacity: Btu/h.
   b. Heating Capacity: Btu/h.
   c. Cooling Input Power: Btu/h.
   d. Heating Input Power: Btu/h.
   e. Air Flow: Cubic feet per minute.
   f. Fan Curves.
   g. External Static Pressure (ESP): Inches WG.
   h. Sound Pressure level: dB(A).
   i. Electrical Data:
      1) Maximum Circuit Amps (MCA).
      2) Maximum Fuse Amps (MFA).
      3) Maximum Starting Current (MSC).
      4) Full Load Amps (FLA).

5) Total Over Current Amps (TOCA).
6) Fan Motor: HP.

j. Maximum Lift of Built-in Condensate Pump.
k. Weight and Dimensions.
l. Control Options.

3. Control Panels: Complete description of options, control points, zones/groups.

E. Specimen Warranty: Copy of manufacturer's warranties.

F. Shop Drawings: Installation drawings custom-made for this project; include as-designed HVAC layouts, locations of equipment items, refrigerant piping sizes and locations, condensate piping sizes and locations, remote sensing devices, control components, electrical connections, control wiring connections. Include:
1. Detailed piping diagrams, with branch balancing devices.
2. Condensate piping routing, size, and pump connections.
3. Detailed power wiring diagrams.
4. Detailed control wiring diagrams.
5. Locations of required access through fixed construction.
6. Drawings required by manufacturer.

G. Operating and Maintenance Data:
1. Manufacturer's complete standard instructions for each unit of equipment and control panel.
2. Custom-prepared system operation, troubleshooting, and maintenance instructions and recommendations.
3. Identification of replaceable parts and local source of supply.

H. Project Record Documents: Record the following:
1. As-installed routing of refrigerant piping and condensate piping.
2. Locations of access panels.
3. Locations of control panels.

I. Warranty: Executed warranty, made out in Owner's name.

1.06 QUALITY ASSURANCE

A. Manufacturer Qualifications:
1. Company that has been manufacturing variable refrigerant volume heat pump equipment for at least 5 years.
2. Company that provides system design software to installers.

B. Installer Qualifications: Trained and approved by manufacturer of equipment.

1.07 DELIVERY, STORAGE AND HANDLING

A. Deliver, store, and handle equipment and refrigerant piping according to manufacturer's recommendations.

1.08 WARRANTY

A. See Section 01 78 00 - Closeout Submittals, for additional warranty requirements.

B. Compressors: Provide manufacturer's warranty for six (6) years from date of installation. During the stated period, should any part fail due to defects in material and workmanship, it shall be repaired or replaced by the manufacturer. All warranty service work shall be preformed by a Daikin factory trained service professional.

PART 2 PRODUCTS

2.01 MANUFACTURERS

A. Basis of Design: The system design shown in the contract documents is based on equipment and system designed by Mitsubishi Electric: www.mitsubishipro.com.

B. Additional acceptable manufacturers:
   1. Daikin AC: www.daikinac.com
   2. LG Industries: www.lg-vrf.com
   3. Samsung: www.www.samsungaccentre.com
   4. Trane Corporation: www.trane.com

C. For systems proposed by other manufacturers, all required modifications to the design and installation shall be the responsibility of the contractor and supplier for both costs and coordination with all other contractors and designers. These changes include, but are not limited to:
   1. Changes in refrigerant piping sizes, legnhts, and locations.
   2. Changes in branch selector quantities, locations, and accessibility.
   3. Changes in electrical requirements, including all power wiring, terminations, breakers, disconnects, and control wiring.
   4. Changes in heat-pump unit locations and quantities.
   5. Changes in structural supports, vibration isolation, and hangers.
   6. Changes to the drawings to reflect the new system parameters.

2.02 HVAC SYSTEM DESIGN

A. System Operation: Heating and cooling, simultaneously.
   1. Zoning: Provide capability for temperature control for each individual indoor/evaporator unit independently of all other units.
   2. Zoning: Provide heating/cooling selection for each individual indoor/evaporator unit independently of all other units.
   3. Provide a complete functional system that achieves the specified performance based on the specified design conditions and that is designed and constructed according to the equipment manufacturer's requirements.
   4. Conditioned spaces are shown on the drawings.
   5. Branch selector unit locations are shown on the drawings for reference only. Final design locations shall be corrdinated in the field to ensure optimized line lengths and maintanence access.
   6. Required equipment unit capacities are shown on the drawings.
   7. Refrigerant piping sizes shown on the drawings are for general reference only. Final line sizing shall be the responsibility of the successful contractor and manufacturer.
   8. Connect equipment to condensate piping; condensate piping is shown on the drawings.

B. Cooling Mode Interior Design Performance:
   1. Daytime Setpoint: 74 degrees F, plus or minus 2 degrees F.
   2. Setpoint Range: 57 degrees F to 80 degrees F.
   3. Night Setback: 78 degrees F.
   4. Interior Relative Humidity: 50 percent, maximum.

C. Heating Mode Interior Design Performance:
   1. Daytime Setpoint: 70 degrees F, plus or minus 2 degrees F.
   2. Setpoint Range: 59 degrees F to 76 degrees F.
   3. Night Setback: 60 degrees F.
   4. Interior Relative Humidity: 20 percent, minimum.

D. Outside Air Design Conditions:
   1. Summer Outside Air Design Temperature: 0.4 percent cooling design condition listed in ASHRAE Fundamentals Handbook.

E. Operating Temperature Ranges:
   1. Simultaneous Heating and Cooling Operating Range: minus 4 degrees F to 60 degrees F dry bulb.
   2. Cooling Mode Operating Range: minus 4 degrees F to 110 degrees F dry bulb.
   3. Heating Mode Operating Range: 0 degrees F to 77 degrees F dry bulb; minus 4 degrees F to 60 degrees F wet bulb; without low ambient controls or auxiliary heat source.

F. Refrigerant Piping Lengths: Provide equipment capable of serving system with following piping lengths without any oil traps:
   1. Minimum Piping Length from Outdoor/Central Unit(s) to Furthest Terminal Unit: 540 feet, actual; 620 feet, equivalent.
   2. Total Combined Liquid Line Length: 3280 feet, minimum.
   3. Minimum Piping Length Between Indoor Units: 49 feet.

G. Controls: Provide the following control interfaces:
   1. For Each Indoor/Evaporator Unit: One wall-mounted wired "local" controller, with temperature sensor; locate where directed, in each space.
   2. One central remote control panel for entire system; locate where indicated.
   3. BACNet gateways sufficient to connect all units to building automation system by others; include wiring to gateways. Unit shall be BTL certified.
   4. Building automation system by HVAC system manufacturer; provide one user stations located where indicated.

H. Local Controllers: Wall-mounted, wired, containing temperature sensor, setpoint adjustment (with central control override, maximum temperature adjustment +1/-1 degree, adjustable), and temperature display.

2.03 EQUIPMENT

A. All Units: Factory assembled, wired, and piped and factory tested for function and safety.
   1. Refrigerant: R-410A.
   2. Performance Certification: AHRI Certified; www.ahrinet.org.
   3. Safety Certification: Tested to UL 1995 by UL or Intertek-ETL and bearing the certification label.
   4. Provide outdoor/condensing units capable of serving indoor unit capacity up to 200 percent of the capacity of the outdoor/condensing unit.
   5. Provide units capable of serving the zones indicated.
   6. Thermal Performance: Provide heating and cooling capacity as indicated, based on the following nominal operating conditions:
   7. Energy Efficiency: Report EER and COP based on tests conducted at “full load” in accordance with AHRI 210/240 or alternate test method approved by U.S. Department of Energy.

B. Electrical Characteristics:
   1. See drawings.

C. System Controls:
   1. Include self diagnostic, auto-check functions to detect malfunctions and display the type and location.

D. Unit Controls: As required to perform input functions necessary to operate system; provided by manufacturer of units.
   1. Provide interfaces to remote control and building automation systems in BACNET native format.

E. Wiring:
   1. Control Wiring: 18 AWG, 2-conductor, non-shielded, non-polarized, stranded cable.
   2. Control Wiring Configuration: Daisy chain.
   3. **All control wiring for the VRF system in it's entirety is the responsbility of the installing contractor, including, but not limited to: Wiring between the condensing unit(s) and system controller, wiring between the branch selector boxes and system controller, wiring from the terminal units to the system controllers, wiring from the thermostats to the terminal units.** The BAS contractor shall only be required to provide communications wiring to the BACnet interface from the nearest BAS controller.

F. Refrigerant Piping:
   1. Refrigerant Flow Balancing: Provide refrigerant piping joints and headers specifically designed to ensure proper refrigerant balance and flow for optimum system capacity and performance.
   2. Insulate each refrigerant line individually between the condensing and indoor units.

2.04 OUTDOOR/CONDENSING UNITS

A. Outdoor/Condensing Units: Air-cooled DX refrigeration units, designed specifically for use with indoor/evaporator units; factory assembled and wired with all necessary electronic and refrigerant controls; modular design for ganging multiple units.
   1. Refrigeration Circuit: Scroll compressors, motors, fans, condenser coil, electronic expansion valves, solenoid valves, 4-way valve, distribution headers, capillaries, filters, shut off valves, oil separators, service ports and refrigerant regulator.
   2. Refrigerant: Factory charged.
   3. Variable Volume Control: Modulate compressor capacity automatically to maintain constant suction and condensing pressures while varying refrigerant volume to suit heating/cooling loads.
   4. Capable of being installed with wiring and piping to the left, right, rear or bottom.
   5. Capable of heating operation at low end of operating range as specified, without additional low ambient controls or auxiliary heat source; during heating operation, reverse cycle (cooling mode) oil return or defrost is not permitted, due to potential reduction in space temperature.
   6. Sound Pressure Level: As specified, measured at 3 feet from front of unit; provide night setback sound control as a standard feature; three selectable sound level steps of 55 dB, 50 dB, and 45 dB, maximum.
   7. Power Failure Mode: Automatically restart operation after power failure without loss of programmed settings.
   8. Safety Devices: High pressure sensor and switch, low pressure sensor/switch, control circuit fuses, crankcase heaters, fusible plug, overload relay, inverter overload protector, thermal protectors for compressor and fan motors, over current protection for the inverter and anti-recycling timers.
   9. Provide refrigerant sub-cooling to ensure the liquid refrigerant does not flash when supplying to us indoor units.
   10. Oil Recovery Cycle: Automatic, occurring 2 hours after start of operation and then every 8 hours of operation; maintain continuous heating during oil return operation.
   11. Controls: Provide contacts for electrical demand shedding.

B. Unit Cabinet: Weatherproof and corrosion resistant; rust-proofed mild steel panels coated with baked enamel finish.
   1. Designed to allow side-by-side installation with minimum spacing.

C. Fans: One or more direct-drive propeller type, vertical discharge, with multiple speed operation via DC (digitally commutating) inverter.
   1. Provide minimum of 2 fans for each condensing unit.
   2. External Static Pressure: Factory set at 0.12 in WG, minimum.
   3. Indoor Mounted Air-Cooled Units: External static pressure field set at 0.32 in WG, minimum; provide for mounting of field-installed ducts.
   4. Fan Airflow: As indicated for specific equipment.
   5. Fan Motors: Factory installed; permanently lubricated bearings; inherent protection; fan guard; output as indicated for specific equipment.

D. Condenser Coils: Copper tubes expanded into aluminum fins to form mechanical bond; waffle louver fin and rifled bore tube design to ensure high efficiency performance.

E. Compressors: Scroll type, hermetically sealed, variable speed inverter-driven and fixed speed in combination to suit total capacity; minimum of one variable speed, inverter driven compressor per condenser unit; minimum of two compressors per condenser unit; capable of controlling capacity within range of 6 percent to 100 percent of total capacity.
   1. Multiple Condenser Modules: Balance total operation hours of compressors by means of duty cycling function, providing for sequential starting of each module at each start/stop cycle, completion of oil return, and completion of defrost, or every 8 hours. Provide twinning kits where required.
   2. Failure Mode: In the event of compressor failure, operate remaining compressor(s) at proportionally reduced capacity; provide microprocessor and associated controls specifically designed to address this condition.
   3. Provide each compressor with crankcase heater, high pressure safety switch, and internal thermal overload protector.
   4. Provide oil separators and intelligent oil management system.
   5. Provide spring mounted vibration isolators.

2.05 BRANCH SELECTOR UNITS

A. Branch Selector Units: Concealed boxes designed specifically for this type of system to control heating/cooling mode selection of downstream units; consisting of electronic expansion valves, subcooling heat exchanger, refrigerant control piping and electronics to facilitate communications between unit and main processor and between branch unit and indoor/evaporator units.
   1. Provide one electronic expansion valve for each downstream unit served, except multiple indoor/evaporator units may be connected, provided balancing joints are used in downstream piping and total capacity is within capacity range of the branch selector.
   2. When branch unit is simultaneously heating and cooling, energize subcooling heat exchanger.
   3. Casing: Galvanized steel sheet; with flame and heat resistant foamed polyethylene sound and thermal insulation.
   4. Refrigerant Connections: Braze type.
   5. Condensate Drainage: Provide condensate drain tap where required.

2.06 INDOOR/EVAPORATOR UNITS

A. All Indoor/Evaporator Units: Factory assembled and tested DX fan-coil units, with electronic proportional expansion valve, control circuit board, factory wiring and piping, self-diagnostics, auto-restart function, 3-minute fused time delay, and test run switch.
   1. Refrigerant: Refrigerant circuits factory-charged with dehydrated air, for field charging.
   2. Temperature Control Mechanism: Return air thermistor and computerized Proportional-Integral-Derivative (PID) control of superheat.
   3. Coils: Direct expansion type constructed from copper tubes expanded into aluminum fins to form a mechanical bond; waffle louver fin and high heat exchange, rifled bore tube design; factory tested.
      a. Provide thermistor on liquid and gas lines.
   4. Fans: Direct-drive, with statically and dynamically balanced impellers; high and low speeds unless otherwise indicated; motor thermally protected.
   5. Return Air Filter: Washable long-life net filter with mildew proof resin, unless otherwise indicated.
   6. Condensate Drainage: Built-in condensate drain pan with PVC drain connection.
   7. Cabinet Insulation: Sound absorbing foamed polystyrene and polyethylene insulation.

B. Recessed Ceiling Units: Four-way airflow cassette with central return air grille, for installation in a fixed ceiling.
   1. Cabinet Height: Maximum of 10 inches above face of ceiling.
   2. Exposed Housing: White, impact resistant, with washable decoration panel.
   3. Supply Airflow Adjustment:
      a. Via motorized louvers which can be horizontally and vertically adjusted from 0 to 90 degrees.
      b. Field-modifiable to 3-way and 2-way airflow.
      c. Three auto-swing positions, including standard, draft prevention and ceiling stain prevention.
   4. Return Air Filter: High efficiency, MERV 8.
   5. Minimum Capacity: As indicated on the drawings.
   6. Sound Pressure Range: Between 28 dB(A) to 33 dB(A) at low speed measured at 5 feet below the unit.
   7. Fan: Direct-drive turbo type, with motor output range of 0.06 to 0.12 HP.
   8. Condensate Pump: Built-in, with lift of 21 inches, minimum.
   9. Provide side-mounted fresh air intake duct connection.

C. Concealed-In-Ceiling Units: Ducted horizontal discharge and return; galvanized steel cabinet.
   1. Return Air Filter: MERV 11.
   2. Sound Pressure: Measured at low speed at 5 feet below unit.
   3. Provide external static pressure switch adjustable for high efficiency filter operation
   4. Condensate Pump: Built-in, with lift of 9 inches, minimum.
   5. Switch box accessible from side or bottom.

D. Wall Surface-Mounted Units: Finished white casing, with removable front grille; foamed polystyrene and polyethylene sound insulation; wall mounting plate; polystyrene condensate drain pan.
   1. Airflow Control: Auto-swing louver that closes automatically when unit stops; five (5) steps of discharge angle, set using remote controller; upon restart, discharge angle defaulting to same angle as previous operation.
   2. Sound Pressure Range: Measured at low speed at 3.3 feet below and away from unit.

3. Condensate Drain Connection: Side (end), not concealed in wall.
4. Fan: Direct-drive cross-flow type.

PART 3 EXECUTION

3.01 EXAMINATION

A. Verify that required electrical services have been installed and are in the proper locations prior to starting installation.

B. Verify that condensate piping has been installed and is in the proper location prior to starting installation.

C. Notify Architect if conditions for installation are unsatisfactory.

3.02 INSTALLATION

A. Install in accordance with manufacturer's instructions.

B. Install refrigerant piping in accordance with equipment manufacturer's instructions.

C. Perform wiring in accordance with NFPA 70, National Electric Code (NEC).

D. Coordinate with installers of systems and equipment connecting to this system.

3.03 FIELD QUALITY CONTROL

A. Provide manufacturer's field representative to inspect installation prior to startup.

3.04 SYSTEM STARTUP

A. Provide manufacturer's field representative to perform system startup.

B. Prepare and start equipment and system in accordance with manufacturer's instructions and recommendations.

C. Adjust equipment for proper operation within manufacturer's published tolerances.

3.05 CLEANING

A. Clean exposed components of dirt, finger marks, and other disfigurements.

3.06 CLOSEOUT ACTIVITIES

A. Demonstrate proper operation of equipment to Red Clay Consolidated School District's designated representative.

B. Demonstration: Demonstrate operation of system to Red Clay Consolidated School District's personnel.
   1. Use operation and maintenance data as reference during demonstration.
   2. Briefly describe function, operation, and maintenance of each component.

C. Training: Train Red Clay Consolidated School District's personnel on operation and maintenance of system.
   1. Use operation and maintenance manual as training reference, supplemented with additional training materials as required.
   2. Provide minimum of two hours of training.
   3. Instructor: Manufacturer's training personnel.
   4. Location: At project site.

3.07 PROTECTION

A. Protect installed components from subsequent construction operations.

B. Replace exposed components broken or otherwise damaged beyond repair.

3.08 MAINTENANCE

A. See Section 01 70 00 - Execution Requirements, for additional requirements relating to maintenance service.

END OF SECTION

SECTION 26 05 19

LV ELEC. POWER CONDUCTORS AND CABLES (600V&LESS)

PART 1 GENERAL

1.01 SECTION INCLUDES

A. Single conductor building wire.

B. Underground feeder and branch-circuit cable.

C. Service entrance cable.

D. Metal-clad cable.

E. Wire and cable for 600 volts and less.

F. Wiring connectors.

G. Electrical tape.

H. Wire pulling lubricant.

1.02 RELATED REQUIREMENTS

A. Section 07 84 00 - Firestopping.

B. Section 26 05 01 - Minor Electrical Demolition: Disconnection, removal, and/or extension of existing electrical conductors and cables.

C. Section 26 05 26 - Grounding and Bonding for Electrical Systems: Additional requirements for grounding conductors and grounding connectors.

D. Section 26 05 53 - Identification for Electrical Systems: Identification products and requirements.

E. Section 28 31 00 - Fire Detection and Alarm: Fire alarm system conductors and cables.

F. Section 31 23 16 - Excavation.

G. Section 31 23 16.13 - Trenching: Excavating, bedding, and backfilling.

H. Section 31 23 23 - Fill: Bedding and backfilling.

1.03 REFERENCE STANDARDS

A. ASTM B3 - Standard Specification for Soft or Annealed Copper Wire.

B. ASTM B33 - Standard Specification for Tin-Coated Soft or Annealed Copper Wire for Electrical Purposes.

C. ASTM B787/B787M - Standard Specification for 19 Wire Combination Unilay-Stranded Copper Conductors for Subsequent Insulation.

D. ASTM D3005 - Standard Specification for Low-Temperature Resistant Vinyl Chloride Plastic Pressure-Sensitive Electrical Insulating Tape.

E. NECA 1 - Standard for Good Workmanship in Electrical Construction; National Electrical Contractors Association.

F. NECA 120 - Standard for Installing Armored Cable (AC) and Metal-Clad Cable (MC); National Electrical Contractors Association.

G. NECA 121 - Standard for Installing Nonmetallic-Sheathed Cable (Type NM-B) and Underground Feeder and Branch-Circuit Cable (Type UF); National Electrical Contractors Association.

H. NEMA WC 70 - Power Cables Rated 2000 Volts or Less for the Distribution of Electrical Energy; National Electrical Manufacturers Association (ANSI/NEMA WC 70/ICEA S-95-658).

I. NETA STD ATS - Acceptance Testing Specifications for Electrical Power Distribution Equipment and Systems; International Electrical Testing Association.

J. NFPA 70 - National Electrical Code; National Fire Protection Association.

K. UL 44 - Thermoset-Insulated Wires and Cables.

L. UL 83 - Thermoplastic-Insulated Wires and Cables.

M. UL 486A-486B - Wire Connectors.

N. UL 486C - Splicing Wire Connectors.

O. UL 486D - Sealed Wire Connector Systems.

P. UL 493 - Thermoplastic-Insulated Underground Feeder and Branch-Circuit Cables.

Q. UL 510 - Polyvinyl Chloride, Polyethylene, and Rubber Insulating Tape.

R. UL 1569 - Metal-Clad Cables.

1.04 ADMINISTRATIVE REQUIREMENTS

A. Coordination:
   1. Coordinate sizes of raceways, boxes, and equipment enclosures installed under other sections with the actual conductors to be installed, including adjustments for conductor sizes increased for voltage drop.
   2. Coordinate the installation of direct burial cable with other trades to avoid conflicts with piping or other potential conflicts.
   3. Coordinate with electrical equipment installed under other sections to provide terminations suitable for use with the conductors to be installed.
   4. Notify Architect and Engineer of any conflicts with or deviations from the contract documents. Obtain direction before proceeding with work.

1.05 SUBMITTALS

A. See Section 01 30 00 - Administrative Requirements, for submittal procedures.

B. Product Data: Provide manufacturer's standard catalog pages and data sheets for conductors and cables, including detailed information on materials, construction, ratings, listings, and available sizes, configurations, and stranding.

C. Product Data: Provide for each cable assembly type.

D. Samples of Actual Product Delivered: Submit one 18 inch length of cable assembly from each reel.
   1. Select each length to include complete set of manufacturer markings.
   2. Attach tag indicating cable size and application information.

E. Test Reports: Indicate procedures and values obtained.

F. Design Data: Indicate voltage drop and ampacity calculations for aluminum conductors substituted for copper conductors. Include proposed modifications to raceways, boxes, wiring gutters, enclosures, etc. to accommodate substituted conductors.

G. Manufacturer's Installation Instructions: Indicate application conditions and limitations of use stipulated by product testing agency. Include instructions for storage, handling, protection, examination, preparation, and installation of product.

H. Project Record Documents: Record actual locations of components and circuits.

1.06 QUALITY ASSURANCE

A. Conform to requirements of NFPA 70.

B. Maintain at the project site a copy of each referenced document that prescribes execution requirements.

C. Manufacturer Qualifications: Company specializing in manufacturing the products specified in this section with minimum three years documented experience.

1.07 DELIVERY, STORAGE, AND HANDLING

A. Receive, inspect, handle, and store conductors and cables in accordance with manufacturer's instructions.

1.08 FIELD CONDITIONS

A. Do not install or otherwise handle thermoplastic-insulated conductors at temperatures lower than 14 degrees F, unless otherwise permitted by manufacturer's instructions. When installation below this temperature is unavoidable, notify Architect and obtain direction before proceeding with work.

PART 2 PRODUCTS

2.01 CONDUCTOR AND CABLE APPLICATIONS

A. Do not use conductors and cables for applications other than as permitted by NFPA 70 and product listing.

B. Provide single conductor building wire installed in suitable raceway unless otherwise indicated, permitted, or required.

C. Metal-clad cable is permitted only as follows:
   1. Where not otherwise restricted, may be used:
      a. Where concealed above accessible ceilings for final connections from junction boxes to luminaires.
         1) Maximum Length: 6 feet.
      b. Where concealed in hollow stud walls, above accessible ceilings, and under raised floors for branch circuits up to 20 A.
   2. In addition to other applicable restrictions, may not be used:
      a. Unless approved by Red Clay Consolidated School District.
      b. Where not approved for use by the authority having jurisdiction.
      c. Where exposed to view.
      d. Where exposed to damage.
      e. For damp, wet, or corrosive locations, .
      f. For isolated ground circuits, unless provided with an additional isolated/insulated grounding conductor.

D. Concealed Dry Interior Locations: Use only building wire in raceway or metal clad cable type THHN/THHW.

E. Exposed Dry Interior Locations: Use only building wire in raceway type THHN/THHW.

F. Above Accessible Ceilings: Use only building wire in raceway or metal clad cable type THHN.

G. Wet or Damp Interior Locations: Use only building wire in raceway type THW.

H. Exterior Locations: Use only building wire in raceway type THHW.

I. Use solid conductor for feeders and branch circuits 10 AWG and smaller.

J. Use solid conductors for control circuits.

K. Use conductor not smaller than 12 AWG for power and lighting circuits.

L. Use conductor not smaller than 16 AWG for control circuits.

M. Use 10 AWG conductors for 20 ampere, 120 volt branch circuits longer than 75 feet.

N. Use 10 AWG conductors for 20 ampere, 277 volt branch circuits longer than 200 feet.

2.02 CONDUCTOR AND CABLE MANUFACTURERS

A. Cerro Wire LLC: www.cerrowire.com.

B. Southwire Company: www.southwire.com.

C. Substitutions: See Section 01 60 00 - Product Requirements.

2.03 ALL CONDUCTORS AND CABLES

A. Provide products that comply with requirements of NFPA 70.

B. Provide products listed and classified by Underwriters Laboratories Inc. as suitable for the purpose indicated.

C. Provide new conductors and cables manufactured not more than one year prior to installation.

D. Unless specifically indicated to be excluded, provide all required conduit, boxes, wiring, connectors, etc. as required for a complete operating system.

E. Comply with NEMA WC 70.

F. Thermoplastic-Insulated Conductors and Cables: Listed and labeled as complying with UL 83.

G. Thermoset-Insulated Conductors and Cables: Listed and labeled as complying with UL 44.

H. Conductors for Grounding and Bonding: Also comply with Section 26 05 26.

I. Conductor Material:
   1. Provide copper conductors only. Aluminum conductors are not acceptable for this project. Conductor sizes indicated are based on copper.
   2. Copper Conductors: Soft drawn annealed, 98 percent conductivity, uncoated copper conductors complying with ASTM B3, ASTM B8, or ASTM B787/B787M unless otherwise indicated.
   3. Tinned Copper Conductors: Comply with ASTM B33.

J. Minimum Conductor Size:
   1. Branch Circuits: 12 AWG.

a. Exceptions:
1) 20 A, 120 V circuits longer than 75 feet: 10 AWG, for voltage drop.
2) 20 A, 120 V circuits longer than 150 feet: 8 AWG, for voltage drop.
3) 20 A, 277 V circuits longer than 150 feet: 10 AWG, for voltage drop.

2. Control Circuits: 14 AWG.

K. Where conductor size is not indicated, size to comply with NFPA 70 but not less than applicable minimum size requirements specified.

L. Conductor Color Coding:
1. Color code conductors as indicated unless otherwise required by the authority having jurisdiction. Maintain consistent color coding throughout project.
2. Color Coding Method: Integrally colored insulation.
3. Color Code:
a. 480Y/277 V, 3 Phase, 4 Wire System:
1) Phase A: Brown.
2) Phase B: Orange.
3) Phase C: Yellow.
4) Neutral/Grounded: Gray.
b. 208Y/120 V, 3 Phase, 4 Wire System:
1) Phase A: Black.
2) Phase B: Red.
3) Phase C: Blue.
4) Neutral/Grounded: White.
c. Equipment Ground, All Systems: Green.
d. Isolated Ground, All Systems: Green with yellow stripe.
e. For control circuits, comply with manufacturer's recommended color code.

2.04 SINGLE CONDUCTOR BUILDING WIRE

A. Manufacturers:
1. Copper Building Wire:
a. Cerro Wire LLC: www.cerrowire.com.
b. Encore Wire Corporation: www.encorewire.com.
c. Southwire Company: www.southwire.com.
d. Substitutions: See Section 01 60 00 - Product Requirements.

B. Description: Single conductor insulated wire.

C. Conductor Stranding:
1. Feeders and Branch Circuits:
a. Size 10 AWG and Smaller: Solid.
b. Size 8 AWG and Larger: Stranded.
2. Control Circuits: Stranded.

D. Insulation Voltage Rating: 600 V.

E. Insulation:
1. Copper Building Wire: Type THHN/THWN or THHN/THWN-2, except as indicated below.

F. Conductor: Copper.
1. For Sizes Smaller Than 4 AWG: Copper.
2. For Sizes 4 AWG and Larger: Copper.

G. Insulation Voltage Rating: 600 volts.

H. Insulation: NFPA 70, Type THHW/THWN/THHN/THW.

I. Insulation: Thermoplastic material rated 75/90 degrees C.

2.05 UNDERGROUND FEEDER AND BRANCH-CIRCUIT CABLE

A. Manufacturers:
   1. Cerro Wire LLC: www.cerrowire.com.
   2. Encore Wire Corporation: www.encorewire.com.
   3. Southwire Company: www.southwire.com.
   4. Substitutions: See Section 01 60 00 - Product Requirements.

B. Description: NFPA 70, Type UF multiple-conductor cable listed and labeled as complying with UL 493, Type UF-B.

C. Provide equipment grounding conductor unless otherwise indicated.

D. Conductor Stranding:
   1. Size 10 AWG and Smaller: Solid.
   2. Size 8 AWG and Larger: Stranded.

E. Insulation Voltage Rating: 600 V.

2.06 SERVICE ENTRANCE CABLE

A. Manufacturers:
   1. Copper Service Entrance Cable:
      a. Cerro Wire LLC: www.cerrowire.com.
      b. Encore Wire Corporation: www.encorewire.com.
      c. Southwire Company: www.southwire.com.
      d. Substitutions: See Section 01 60 00 - Product Requirements.

B. Conductor Stranding: Stranded.

C. Insulation Voltage Rating: 600 V.

2.07 METAL-CLAD CABLE

A. Manufacturers:
   1. AFC Cable Systems Inc: www.afcweb.com.
   2. Encore Wire Corporation: www.encorewire.com.
   3. Southwire Company: www.southwire.com.
   4. Substitutions: See Section 01 60 00 - Product Requirements.

B. Description: NFPA 70, Type MC cable listed and labeled as complying with UL 1569, and listed for use in classified firestop systems to be used.

C. Conductor Stranding:
   1. Size 10 AWG and Smaller: Solid.
   2. Size 8 AWG and Larger: Stranded.

D. Insulation Voltage Rating: 600 V.

E. Insulation: Type THHN, THHN/THWN, or THHN/THWN-2.

F. Provide dedicated neutral conductor for each phase conductor where indicated or required.

G. Grounding: Full-size integral equipment grounding conductor.
   1. Provide additional isolated/insulated grounding conductor where indicated or required.

H. Armor: Steel, interlocked tape.

I. Insulation Temperature Rating: 75/90 degrees C.

2.08 SERVICE ENTRANCE CABLE

A. Description: NFPA 70, Type USE.

B. Conductor: Copper.
   1. For Sizes Smaller Than 4 AWG: Copper.
   2. For Sizes 4 AWG and Larger: Copper.

C. Insulation Voltage Rating: 600 volts.

D. Insulation: Type XHHW.

2.09 METAL CLAD CABLE

A. Description: NFPA 70, Type MC.

B. Conductor: Copper.
   1. For Sizes Smaller Than 4 AWG: Copper.
   2. For Sizes 4 AWG and Larger: Copper.

C. Insulation Voltage Rating: 600 volts.

D. Insulation Temperature Rating: 90 degrees C.

E. Insulation Material: Thermoplastic.

F. Armor Material: Steel.

G. Armor Design: Interlocked metal tape.

H. Jacket: PVC.

2.10 WIRING CONNECTORS

A. Description: Wiring connectors appropriate for the application, suitable for use with the conductors to be connected, and listed as complying with UL 486A-486B or UL 486C as applicable.

B. Connectors for Grounding and Bonding: Comply with Section 26 05 26.

C. Wiring Connectors for Splices and Taps:
   1. Copper Conductors Size 8 AWG and Smaller: Use twist-on insulated spring connectors.
   2. Copper Conductors Size 6 AWG and Larger: Use mechanical connectors or compression connectors.

D. Wiring Connectors for Terminations:
   1. Provide terminal lugs for connecting conductors to equipment furnished with terminations designed for terminal lugs.
   2. Copper Conductors Size 8 AWG and Larger: Use mechanical connectors or compression connectors where connectors are required.
   3. Stranded Conductors Size 10 AWG and Smaller: Use crimped terminals for connections to terminal screws.
   4. Conductors for Control Circuits: Use crimped terminals for all connections.

E. Twist-on Insulated Spring Connectors: Rated 600 V, 221 degrees F for standard applications and 302 degrees F for high temperature applications; pre-filled with sealant and listed as complying with UL 486D for damp and wet locations.

1. Manufacturers:
   a. 3M: www.3m.com.
   b. Ideal Industries, Inc: www.idealindustries.com.
   c. NSI Industries LLC: www.nsiindustries.com.
   d. Substitutions: See Section 01 60 00 - Product Requirements.

F. Mechanical Connectors: Provide bolted type or set-screw type.
1. Manufacturers:
   a. Burndy: www.burndy.com.
   b. Ilsco: www.ilsco.com.
   c. Thomas & Betts Corporation: www.tnb.com.
   d. Substitutions: See Section 01 60 00 - Product Requirements.

G. Compression Connectors: Provide circumferential type or hex type crimp configuration.
1. Manufacturers:
   a. Burndy: www.burndy.com.
   b. Ilsco: www.ilsco.com.
   c. Thomas & Betts Corporation: www.tnb.com.
   d. Substitutions: See Section 01 60 00 - Product Requirements.

H. Crimped Terminals: Nylon-insulated, with insulation grip and terminal configuration suitable for connection to be made.
1. Manufacturers:
   a. Burndy: www.burndy.com.
   b. Ilsco: www.ilsco.com.
   c. Thomas & Betts Corporation: www.tnb.com.

2.11 WIRING ACCESSORIES

A. Electrical Tape:
1. Manufacturers:
   a. 3M: www.3m.com.
   b. Plymouth Rubber Europa: www.plymouthrubber.com.
   c. Substitutions: See Section 01 60 00 - Product Requirements.
2. Vinyl Insulating Electrical Tape: Complying with ASTM D3005 and listed as complying with UL 510; minimum thickness of 7 mil; resistant to abrasion, corrosion, and sunlight; conformable for application down to 0 degrees F and suitable for continuous temperature environment up to 221 degrees F.

B. Wire Pulling Lubricant: Listed; suitable for use with the conductors or cables to be installed and suitable for use at the installation temperature.
1. Manufacturers:
   a. 3M: www.3m.com.
   b. American Polywater Corporation: www.polywater.com.
   c. Ideal Industries, Inc: www.idealindustries.com.
   d. Substitutions: See Section 01 60 00 - Product Requirements.

C. Split Bolt Connectors: Description: Connector suitable for copper to copper connection tested and listed to UL 486A requirements. Black burn type-H or equal.
1. Product: Thomas R Betts or equal
2. Substitutions: See Section 01 60 00 - Product Requirements.
3. Product: Thomas R Betts or equal

D. Spring Wire Connectors: Description: Flame retardant thermoplastic shell with plated steel square wire spring gated for 105 degrees C, 600 volts, Thomas and Betts fixed spring wire connectors or equal.

1. Product: Ideal or equal

PART 3 EXECUTION

3.01 EXAMINATION

A. Verify that interior of building has been protected from weather.

B. Verify that work likely to damage wire and cable has been completed.

C. Verify that raceways, boxes, and equipment enclosures are installed and are properly sized to accommodate conductors and cables in accordance with NFPA 70.

D. Verify that raceway installation is complete and supported.

E. Verify that field measurements are as shown on the drawings.

F. Verify that conditions are satisfactory for installation prior to starting work.

3.02 PREPARATION

A. Clean raceways thoroughly to remove foreign materials before installing conductors and cables.

3.03 INSTALLATION

A. Circuiting Requirements:
   1. Unless dimensioned, circuit routing indicated is diagrammatic.
   2. When circuit destination is indicated and routing is not shown, determine exact routing required.
   3. Arrange circuiting to minimize splices.

B. Install products in accordance with manufacturer's instructions.

C. Install conductors and cable in a neat and workmanlike manner in accordance with NECA 1.

D. Install underground feeder and branch-circuit cable (Type UF-B) in accordance with NECA 121.

E. Install metal-clad cable (Type MC) in accordance with NECA 120.

F. Installation in Raceway:
   1. Tape ends of conductors and cables to prevent infiltration of moisture and other contaminants.
   2. Pull all conductors and cables together into raceway at same time.
   3. Do not damage conductors and cables or exceed manufacturer's recommended maximum pulling tension and sidewall pressure.
   4. Use suitable wire pulling lubricant where necessary, except when lubricant is not recommended by the manufacturer.

G. Paralleled Conductors: Install conductors of the same length and terminate in the same manner.

H. Secure and support conductors and cables in accordance with NFPA 70 using suitable supports and methods approved by the authority having jurisdiction. Provide independent support from building structure. Do not provide support from raceways, piping, ductwork, or other systems.
   1. Installation Above Suspended Ceilings: Do not provide support from ceiling support system. Do not provide support from ceiling grid or allow conductors and cables to lay on ceiling tiles.

I. Terminate cables using suitable fittings.
   1. Metal-Clad Cable (Type MC):
      a. Use listed fittings.
      b. Cut cable armor only using specialized tools to prevent damaging conductors or insulation. Do not use hacksaw or wire cutters to cut armor.

J. Install conductors with a minimum of 12 inches of slack at each outlet.

K. Neatly train and bundle conductors inside boxes, wireways, panelboards and other equipment enclosures.

L. Make wiring connections using specified wiring connectors.
   1. Make splices and taps only in accessible boxes. Do not pull splices into raceways or make splices in conduit bodies or wiring gutters.
   2. Remove appropriate amount of conductor insulation for making connections without cutting, nicking or damaging conductors.
   3. Do not remove conductor strands to facilitate insertion into connector.
   4. Clean contact surfaces on conductors and connectors to suitable remove corrosion, oxides, and other contaminates. Do not use wire brush on plated connector surfaces.
   5. Mechanical Connectors: Secure connections according to manufacturer's recommended torque settings.
   6. Compression Connectors: Secure connections using manufacturer's recommended tools and dies.

M. Insulate splices and taps that are made with uninsulated connectors using methods suitable for the application, with insulation and mechanical strength at least equivalent to unspliced conductors.

N. Insulate ends of spare conductors using vinyl insulating electrical tape.

O. Install firestopping to preserve fire resistance rating of partitions and other elements, using materials and methods specified in Section 07 84 00.

P. Unless specifically indicated to be excluded, provide final connections to all equipment and devices, including those furnished by others, as required for a complete operating system.

Q. Install wire and cable securely, in a neat and workmanlike manner, as specified in NECA 1.

R. Route wire and cable as required to meet project conditions.
   1. Wire and cable routing indicated is approximate unless dimensioned.
   2. Where wire and cable destination is indicated and routing is not shown, determine exact routing and lengths required.
   3. Include wire and cable of lengths required to install connected devices within 10 ft of location shown.

S. Use wiring methods indicated.

T. Pull all conductors into raceway at same time.

U. Use suitable wire pulling lubricant for building wire 4 AWG and larger.

V. Protect exposed cable from damage.

W. Support cables above accessible ceiling, using spring metal clips or metal cable ties to support cables from structure or ceiling suspension system. Do not rest cable on ceiling panels.

X. Use suitable cable fittings and connectors.

Y. Neatly train and lace wiring inside boxes, equipment, and panelboards.

Z. Clean conductor surfaces before installing lugs and connectors.

AA. Make splices, taps, and terminations to carry full ampacity of conductors with no perceptible temperature rise.

AB. Use suitable reducing connectors or mechanical connector adaptors for connecting aluminum conductors to copper conductors.

AC. Use split bolt connectors for copper conductor splices and taps, 6 AWG and larger. Tape uninsulated conductors and connector with electrical tape to 150 percent of insulation rating of conductor.

AD. Use solderless pressure connectors with insulating covers for copper conductor splices and taps, 8 AWG and smaller.

AE. Use insulated spring wire connectors with plastic caps for copper conductor splices and taps, 10 AWG and smaller.

AF. Trench and backfill for direct burial cable installation as specified in Sections 31 23 16 and 31 2323; Section 31 2316 13. Install warning tape along entire length of direct burial cable, within 3 inches of grade.

AG. Identify and color code wire and cable under provisions of Section 26 05 53. Identify each conductor with its circuit number or other designation indicated.

3.04 FIELD QUALITY CONTROL

A. Perform inspection, testing, and adjusting in accordance with Section 01 40 00.

B. Perform field inspection and testing in accordance with Section 01 40 00.

C. Inspect and test in accordance with NETA STD ATS, except Section 4.

D. Perform inspections and tests listed in NETA STD ATS, Section 7.3.2. The insulation resistance test is required for all conductors. The resistance test for parallel conductors listed as optional is not required.
   1. Disconnect surge protective devices (SPDs) prior to performing any high potential testing. Replace SPDs damaged by performing high potential testing with SPDs connected.

E. Correct deficiencies and replace damaged or defective conductors and cables.

F. Perform inspections and tests listed in NETA STD ATS, Section 7.3.2.

END OF SECTION

SECTION 26 05 26

GROUNDING AND BONDING FOR ELECTRICAL SYSTEMS

PART 1 GENERAL

1.01 SECTION INCLUDES

A. Grounding and bonding requirements.

B. Conductors for grounding and bonding.

C. Connectors for grounding and bonding.

D. Ground bars.

E. Ground rod electrodes.

F. Grounding and bonding components.

G. Provide all components necessary to complete the grounding system(s) consisting of:
   1. Existing metal underground water pipe.
   2. Metal frame of the building.
   3. Existing metal underground gas piping system.
   4. Metal underground gas piping system.

1.02 RELATED REQUIREMENTS

A. Section 26 05 19 - Low-Voltage Electrical Power Conductors and Cables: Additional requirements for conductors for grounding and bonding, including conductor color coding.

B. Section 26 05 53 - Identification for Electrical Systems: Identification products and requirements.

1.03 REFERENCE STANDARDS

A. NECA 1 - Standard for Good Workmanship in Electrical Construction; National Electrical Contractors Association.

B. NEMA GR 1 - Grounding Rod Electrodes and Grounding Rod Electrode Couplings; National Electrical Manufacturers Association.

C. NETA STD ATS - Acceptance Testing Specifications for Electrical Power Distribution Equipment and Systems; International Electrical Testing Association.

D. NETA STD ATS - Acceptance Testing Specifications for Electrical Power Distribution Equipment and Systems; International Electrical Testing Association.

E. NFPA 70 - National Electrical Code; National Fire Protection Association.

F. UL 467 - Grounding and Bonding Equipment.

1.04 ADMINISTRATIVE REQUIREMENTS

A. Coordination:
   1. Verify exact locations of underground metal water service pipe entrances to building.
   2. Coordinate the work with other trades to provide steel reinforcement complying with specified requirements for concrete-encased electrode.
   3. Notify Architect of any conflicts with or deviations from the contract documents. Obtain direction before proceeding with work.

B. Sequencing:
   1. Do not install ground rod electrodes until final backfill and compaction is complete.

1.05 PERFORMANCE REQUIREMENTS

A. Grounding System Resistance: 5 ohms.

1.06 SUBMITTALS

A. See Section 01 30 00 - Administrative Requirements for submittals procedures.

B. Product Data: Provide manufacturer's standard catalog pages and data sheets for grounding and bonding system components.

C. Product Data: Provide for grounding electrodes and connections.

D. Test Reports: Indicate overall resistance to ground and resistance of each electrode.

E. Manufacturer's Instructions: Indicate application conditions and limitations of use stipulated by product testing agency. Include instructions for storage, handling, protection, examination, preparation, and installation of product.

F. Field quality control test reports.

G. Project Record Documents: Record actual locations of components and grounding electrodes.

1.07 QUALITY ASSURANCE

A. Conform to requirements of NFPA 70.

B. Maintain at the project site a copy of each referenced document that prescribes execution requirements.

1.08 DELIVERY, STORAGE, AND HANDLING

A. Receive, inspect, handle, and store products in accordance with manufacturer's instructions.

PART 2 PRODUCTS

2.01 GROUNDING AND BONDING REQUIREMENTS

A. Do not use products for applications other than as permitted by NFPA 70 and product listing.

B. Unless specifically indicated to be excluded, provide all required components, conductors, connectors, conduit, boxes, fittings, supports, accessories, etc. as necessary for a complete grounding and bonding system.

C. Where conductor size is not indicated, size to comply with NFPA 70 but not less than applicable minimum size requirements specified.

D. Grounding Electrode System:
   1. Provide connection to required and supplemental grounding electrodes indicated to form grounding electrode system.
      a. Provide continuous grounding electrode conductors without splice or joint.
      b. Install grounding electrode conductors in raceway where exposed to physical damage. Bond grounding electrode conductor to metallic raceways at each end with bonding jumper.
   2. Metal Underground Water Pipe(s):
      a. Provide connection to underground metal domestic and fire protection (where present) water service pipe(s) that are in direct contact with earth for at least 10

feet at an accessible location not more than 5 feet from the point of entrance to the building.
b. Provide bonding jumper(s) around insulating joints/pipes as required to make pipe electrically continuous.
c. Provide bonding jumper around water meter of sufficient length to permit removal of meter without disconnecting jumper.
3. Metal Building or Structure Frame:
a. Provide connection to metal building or structure frame effectively grounded in accordance with NFPA 70 at nearest accessible location.
4. Ground Ring:
a. Provide a ground ring encircling the building or structure consisting of bare copper conductor not less than 2 AWG in direct contact with earth, installed at a depth of not less than 30 inches.
b. Provide connection from ground ring conductor to:
1) Perimeter columns of metal building frame.
2) Ground rod electrodes located as indicated.
5. Ground Rod Electrode(s):
a. Provide three electrodes in an equilateral triangle configuration unless otherwise indicated or required.
b. Space electrodes not less than 10 feet from each other and any other ground electrode.

E. Bonding and Equipment Grounding:
1. Provide bonding for equipment grounding conductors, equipment ground busses, metallic equipment enclosures, metallic raceways and boxes, device grounding terminals, and other normally non-current-carrying conductive materials enclosing electrical conductors/equipment or likely to become energized as indicated and in accordance with NFPA 70.
2. Provide insulated equipment grounding conductor in each feeder and branch circuit raceway. Do not use raceways as sole equipment grounding conductor.
3. Where circuit conductor sizes are increased for voltage drop, increase size of equipment grounding conductor proportionally in accordance with NFPA 70.
4. Unless otherwise indicated, connect wiring device grounding terminal to branch circuit equipment grounding conductor and to outlet box with bonding jumper.
5. Terminate branch circuit equipment grounding conductors on solidly bonded equipment ground bus only. Do not terminate on neutral (grounded) or isolated/insulated ground bus.
6. Provide bonding jumper across expansion or expansion/deflection fittings provided to accommodate conduit movement.
7. Provide bonding for interior metal piping systems in accordance with NFPA 70. This includes, but is not limited to:
a. Metal water piping where not already effectively bonded to metal underground water pipe used as grounding electrode.
b. Metal gas piping.

F. Isolated Ground System:
1. Where isolated ground receptacles or other isolated ground connections are indicated, provide separate isolated/insulated equipment grounding conductors.
2. Connect isolated/insulated equipment grounding conductors only to separate isolated/insulated equipment ground busses.
3. Connect the isolated/insulated equipment grounding conductors to the solidly bonded equipment ground bus only at the service disconnect or separately derived system disconnect. Do not make any other connections between isolated ground system and normal equipment ground system on the load side of this connection.

2.02 GROUNDING AND BONDING COMPONENTS

A. General Requirements:
   1. Provide products listed, classified, and labeled by Underwriter's Laboratories Inc. (UL) or testing firm acceptable to authority having jurisdiction as suitable for the purpose indicated.
   2. Provide products listed and labeled as complying with UL 467 where applicable.

B. Conductors for Grounding and Bonding, in addition to requirements of Section 26 05 19:
   1. Use insulated copper conductors unless otherwise indicated.
      a. Exceptions:
         1) Use bare copper conductors where installed underground in direct contact with earth.
         2) Use bare copper conductors where directly encased in concrete (not in raceway).

C. Connectors for Grounding and Bonding:
   1. Description: Connectors appropriate for the application and suitable for the conductors and items to be connected; listed and labeled as complying with UL 467.
   2. Unless otherwise indicated, use exothermic welded connections for underground, concealed and other inaccessible connections.
   3. Unless otherwise indicated, use mechanical connectors, compression connectors, or exothermic welded connections for accessible connections.
      a. Exceptions:
         1) Use exothermic welded connections for connections to metal building frame.
   4. Manufacturers - Mechanical and Compression Connectors:
      a. Burndy: www.burndy.com.
      b. Harger Lightning & Grounding: www.harger.com.
      c. Thomas & Betts Corporation: www.tnb.com.
      d. Substitutions: See Section 01 60 00 - Product Requirements.
   5. Manufacturers - Exothermic Welded Connections:
      a. Burndy: www.burndy.com.
      b. Cadweld, a brand of Erico International Corporation: www.erico.com.
      c. ThermOweld, a brand of Continental Industries, Inc: www.thermoweld.com.
      d. Substitutions: See Section 01 60 00 - Product Requirements.

D. Ground Bars:
   1. Description: Copper rectangular ground bars with mounting brackets and insulators.
   2. Size: As indicated.
   3. Holes for Connections: As indicated or as required for connections to be made.
   4. Manufacturers:
      a. Erico International Corporation: www.erico.com.
      b. Harger Lightning & Grounding: www.harger.com.
      c. ThermOweld, a brand of Continental Industries, Inc: www.thermoweld.com.
      d. Substitutions: See Section 01 60 00 - Product Requirements.

E. Ground Rod Electrodes:
   1. Comply with NEMA GR 1.
   2. Material: Copper-bonded (copper-clad) steel.
   3. Size: 3/4 inch diameter by 10 feet length, unless otherwise indicated.
   4. Manufacturers:
      a. Erico International Corporation: www.erico.com.
      b. Galvan Industries, Inc: www.galvanelectrical.com.
      c. Harger Lightning & Grounding: www.harger.com.
      d. Substitutions: See Section 01 60 00 - Product Requirements.

2.03 MANUFACTURERS

A. Cooper Power Systems: www.cooperpower.com.

B. Framatome Connectors International: www.fciconnect.com.

C. Lightning Master Corporation: www.lightningmaster.com.

D. Substitutions: See Section 01 60 00 - Product Requirements.

2.04 CONNECTORS AND ACCESSORIES

A. Mechanical Connectors: Bronze.
   1. Substitutions: See Section 01 60 00 - Product Requirements.

B. Wire: Stranded copper.

C. Grounding Electrode Conductor: Size to meet NFPA 70 requirements.

PART 3 EXECUTION

3.01 EXAMINATION

A. Verify that work likely to damage grounding and bonding system components has been completed.

B. Verify that field measurements are as shown on the drawings.

C. Verify that conditions are satisfactory for installation prior to starting work.

D. Verify existing conditions prior to beginning work.

E. Verify that final backfill and compaction has been completed before driving rod electrodes.

3.02 INSTALLATION

A. Install products in accordance with manufacturer's instructions.

B. Install grounding and bonding system components in a neat and workmanlike manner in accordance with NECA 1.

C. Ground Rod Electrodes: Unless otherwise indicated, install ground rod electrodes vertically. Where encountered rock prohibits vertical installation, install at 45 degree angle or bury horizontally in trench at least 30 inches (750 mm) deep in accordance with NFPA 70 or provide ground plates.

D. Make grounding and bonding connections using specified connectors.
   1. Remove appropriate amount of conductor insulation for making connections without cutting, nicking or damaging conductors. Do not remove conductor strands to facilitate insertion into connector.
   2. Remove nonconductive paint, enamel, or similar coating at threads, contact points, and contact surfaces.
   3. Exothermic Welds: Make connections using molds and weld material suitable for the items to be connected in accordance with manufacturer's recommendations.
   4. Mechanical Connectors: Secure connections according to manufacturer's recommended torque settings.
   5. Compression Connectors: Secure connections using manufacturer's recommended tools and dies.

E. Identify grounding and bonding system components in accordance with Section 26 05 53.

F. Provide bonding to meet requirements described in Quality Assurance.

G. Equipment Grounding Conductor: Provide separate, insulated conductor within each feeder and branch circuit raceway. Terminate each end on suitable lug, bus, or bushing. Each of branch circuits and feeder circuits shall have dedicated equipment grounding conductor, sharing this conductor with other grounding conductors is not permitted.

3.03 FIELD QUALITY CONTROL

A. Perform inspection in accordance with Section 01 40 00.

B. Inspect and test in accordance with NETA STD ATS except Section 4.

C. Perform inspections and tests listed in NETA STD ATS, Section 7.13.

D. Perform ground electrode resistance tests under normally dry conditions. Precipitation within the previous 48 hours does not constitute normally dry conditions.

E. Investigate and correct deficiencies where measured ground resistances do not comply with specified requirements.

F. Submit detailed reports indicating inspection and testing results and corrective actions taken.

END OF SECTION

SECTION 26 05 29

HANGERS AND SUPPORTS FOR ELECTRICAL SYSTEMS

PART 1 GENERAL

1.01 SECTION INCLUDES

A. Support and attachment components for equipment, conduit, cable, boxes, and other electrical work.

1.02 REFERENCE STANDARDS

A. ASTM A123/A123M - Standard Specification for Zinc (Hot-Dip Galvanized) Coatings on Iron and Steel Products.

B. ASTM A153/A153M - Standard Specification for Zinc Coating (Hot-Dip) on Iron and Steel Hardware.

C. ASTM B633 - Standard Specification for Electrodeposited Coatings of Zinc on Iron and Steel.

D. MFMA-4 - Metal Framing Standards Publication; Metal Framing Manufacturers Association.

E. NECA 1 - Standard for Good Workmanship in Electrical Construction; National Electrical Contractors Association.

F. NFPA 70 - National Electrical Code; National Fire Protection Association.

1.03 SUBMITTALS

A. See Section 01 30 00 - Administrative Requirements, for submittal procedures.

B. Product Data: Provide manufacturer’s catalog data for fastening systems.

C. Manufacturer's Instructions: Indicate application conditions and limitations of use stipulated by product testing agency. Include instructions for storage, handling, protection, examination, preparation, and installation of product.

1.04 QUALITY ASSURANCE

A. Comply with NFPA 70.

B. Comply with applicable building code.

PART 2 PRODUCTS

2.01 SUPPORT AND ATTACHMENT COMPONENTS

A. General Requirements:
   1. Provide all required hangers, supports, anchors, fasteners, fittings, accessories, and hardware as necessary for the complete installation of electrical work.
   2. Provide products listed, classified, and labeled by Underwriter's Laboratories Inc. (UL) or testing firm acceptable to authority having jurisdiction as suitable for the purpose indicated, where applicable.
   3. Where support and attachment component types and sizes are not indicated, select in accordance with manufacturer's application criteria as required for the load to be supported with a minimum safety factor of 1.5. Include consideration for vibration, equipment operation, and shock loads where applicable.
   4. Do not use products for applications other than as permitted by NFPA 70 and product listing.

5. Steel Components: Use corrosion resistant materials suitable for the environment where installed.
   a. Zinc-Plated Steel: Electroplated in accordance with ASTM B633.
   b. Galvanized Steel: Hot-dip galvanized after fabrication in accordance with ASTM A123/A123M or ASTM A153/A153M.

B. Conduit and Cable Supports: Straps, clamps, etc. suitable for the conduit or cable to be supported.
   1. Conduit Straps: One-hole or two-hole type; steel or malleable iron.
   2. Conduit Clamps: Bolted type unless otherwise indicated.

C. Outlet Box Supports: Hangers, brackets, etc. suitable for the boxes to be supported.

D. Metal Channel (Strut) Framing Systems: Factory-fabricated continuous-slot metal channel (strut) and associated fittings, accessories, and hardware required for field-assembly of supports.
   1. Comply with MFMA-4.

E. Hanger Rods: Threaded zinc-plated steel unless otherwise indicated.

F. Anchors and Fasteners:
   1. Unless otherwise indicated and where not otherwise restricted, use the anchor and fastener types indicated for the specified applications.

2.02 MANUFACTURERS

A. Thomas & Betts Corporation: www.tnb.com.

B. Threaded Rod Company: www.threadedrod.com.

C. Substitutions: See Section 01 60 00 - Product Requirements.

2.03 MATERIALS

A. Hangers, Supports, Anchors, and Fasteners - General: Corrosion-resistant materials of size and type adequate to carry the loads of equipment and conduit, including weight of wire in conduit.

B. Supports: Fabricated of structural steel or formed steel members; galvanized.

C. Anchors and Fasteners:
   1. Do not use powder-actuated anchors.
   2. Obtain permission from Architect before using powder-actuated anchors.
   3. Concrete Structural Elements: Use precast inserts.
   4. Steel Structural Elements: Use beam clamps.
   5. Concrete Surfaces: Use self-drilling anchors or expansion anchors.
   6. Hollow Masonry, Plaster, and Gypsum Board Partitions: Use hollow wall fasteners.
   7. Solid Masonry Walls: Use expansion anchors.
   8. Sheet Metal: Use sheet metal screws.
   9. Wood Elements: Use wood screws.

D. Formed Steel Channel:
   1. Product: manufactured by [B-Line].
   2. Substitutions: See Section 01 60 00 - Product Requirements.

PART 3 EXECUTION

3.01 INSTALLATION

A. Install products in accordance with manufacturer's instructions.

B. Install support and attachment components in a neat and workmanlike manner in accordance with NECA 1.

C. Provide independent support from building structure. Do not provide support from piping, ductwork, or other systems.

D. Unless specifically indicated or approved by Architect, do not provide support from suspended ceiling support system or ceiling grid.

E. Unless specifically indicated or approved by Architect, do not provide support from roof deck.

F. Do not penetrate or otherwise notch or cut structural members without approval of Structural Engineer.

G. Equipment Support and Attachment:
   1. Use metal fabricated supports or supports assembled from metal channel (strut) to support equipment as required.
   2. Use metal channel (strut) secured to studs to support equipment surface-mounted on hollow stud walls when wall strength is not sufficient to resist pull-out.
   3. Use metal channel (strut) to support surface-mounted equipment in wet or damp locations to provide space between equipment and mounting surface.
   4. Securely fasten floor-mounted equipment. Do not install equipment such that it relies on its own weight for support.

H. Secure fasteners according to manufacturer's recommended torque settings.

I. Remove temporary supports.

END OF SECTION

SECTION 26 05 34

CONDUIT

PART 1 GENERAL

1.01 SECTION INCLUDES

A. Galvanized steel rigid metal conduit (RMC).

B. Flexible metal conduit (FMC).

C. Liquidtight flexible metal conduit (LFMC).

D. Electrical metallic tubing (EMT).

E. Rigid polyvinyl chloride (PVC) conduit.

F. Conduit fittings.

G. Accessories.

H. Conduit, fittings and conduit bodies.

1.02 RELATED REQUIREMENTS

A. Section 03 30 00 - Cast-in-Place Concrete: Concrete encasement of conduits.

B. Section 07 84 00 - Firestopping.

C. Section 26 05 19 - Low-Voltage Electrical Power Conductors and Cables: Metal clad cable (Type MC) and armored cable (Type AC), including uses permitted.

D. Section 26 05 26 - Grounding and Bonding for Electrical Systems.
   1. Includes additional requirements for fittings for grounding and bonding.

E. Section 26 05 29 - Hangers and Supports for Electrical Systems.

F. Section 26 05 53 - Identification for Electrical Systems.

G. Section 26 05 37 - Boxes.

H. Section 26 05 53 - Identification for Electrical Systems: Identification products and requirements.

I. Section 26 27 01 - Electrical Service Entrance: Additional requirements for electrical service conduits.

J. Section 27 10 05 - Structured Cabling for Voice and Data - Inside-Plant: Additional requirements for communications systems conduits.

1.03 REFERENCE STANDARDS

A. ANSI C80.1 - American National Standard for Electrical Rigid Steel Conduit (ERSC).

B. ANSI C80.3 - American National Standard for Steel Electrical Metallic Tubing (EMT).

C. ANSI C80.5 - American National Standard for Electrical Rigid Aluminum Conduit (ERAC).

D. NECA 1 - Standard for Good Workmanship in Electrical Construction; National Electrical Contractors Association.

E. NECA 101 - Standard for Installing Steel Conduits (Rigid, IMC, EMT); National Electrical Contractors Association.

F. NECA 111 - Standard for Installing Nonmetallic Raceways (RNC, ENT, LFNC); National Electrical Contractors Association.

G. NEMA FB 1 - Fittings, Cast Metal Boxes, and Conduit Bodies for Conduit, Electrical Metallic Tubing, and Cable; National Electrical Manufacturers Association (ANSI/NEMA FB 1).

H. UL 1 - Flexible Metal Conduit.

I. UL 6 - Electrical Rigid Metal Conduit-Steel.

J. UL 360 - Liquid-Tight Flexible Steel Conduit.

K. UL 514B - Conduit, Tubing, and Cable Fittings.

L. UL 651 - Schedule 40 and 80 Rigid PVC Conduit and Fittings.

M. UL 797 - Electrical Metallic Tubing-Steel.

1.04 ADMINISTRATIVE REQUIREMENTS

A. Coordination:
   1. Coordinate minimum sizes of conduits with the actual conductors to be installed, including adjustments for conductor sizes increased for voltage drop.
   2. Coordinate the arrangement of conduits with structural members, ductwork, piping, equipment and other potential conflicts installed under other sections or by others.
   3. Verify exact conduit termination locations required for boxes, enclosures, and equipment installed under other sections or by others.
   4. Coordinate the work with other trades to provide roof penetrations that preserve the integrity of the roofing system and do not void the roof warranty.
   5. Notify Architect of any conflicts with or deviations from the contract documents. Obtain direction before proceeding with work.

B. Sequencing:
   1. Do not begin installation of conductors and cables until installation of conduit is complete between outlet, junction and splicing points.

1.05 SUBMITTALS

A. See Section 01 30 00 - Administrative Requirements for submittals procedures.

B. Product Data: Provide manufacturer's standard catalog pages and data sheets for conduits and fittings.

C. Shop Drawings:
   1. Include proposed locations of roof penetrations and proposed methods for sealing.

D. Project Record Documents: Record actual routing for conduits installed underground, conduits embedded within concrete slabs, and conduits 2 inch (53 mm) trade size and larger.

E. Product Data: Provide for metallic conduit and flexible metal conduit.

F. Samples of Materials Actually Delivered to Site:
   1. Two pieces each of conduit, 2 feet long.

G. Project Record Documents: Accurately record actual routing of conduits larger than 2 inches.

1.06 QUALITY ASSURANCE

A. Conform to requirements of NFPA 70.

B. Maintain at the project site a copy of each referenced document that prescribes execution requirements.

C. Products: Listed and classified by Underwriters Laboratories Inc. as suitable for purpose specified and shown.

1.07 DELIVERY, STORAGE, AND HANDLING

A. Receive, inspect, handle, and store conduit and fittings in accordance with manufacturer's instructions.

B. Accept conduit on site. Inspect for damage.

C. Protect conduit from corrosion and entrance of debris by storing above grade. Provide appropriate covering.

D. Protect PVC conduit from sunlight.

PART 2 PRODUCTS

2.01 CONDUIT APPLICATIONS

A. Do not use conduit and associated fittings for applications other than as permitted by NFPA 70 and product listing.

B. Unless otherwise indicated and where not otherwise restricted, use the conduit types indicated for the specified applications. Where more than one listed application applies, comply with the most restrictive requirements. Where conduit type for a particular application is not specified, use galvanized steel rigid metal conduit.

C. Underground:
   1. Under Slab on Grade: Use rigid PVC conduit.
   2. Exterior, Direct-Buried: Use rigid PVC conduit.
   3. Exterior, Embedded Within Concrete: Use rigid PVC conduit.
   4. Where rigid polyvinyl (PVC) conduit is provided, transition to galvanized steel rigid metal conduit where emerging from underground.
   5. Where rigid polyvinyl (PVC) conduit larger than 2 inch (53 mm) trade size is provided, use galvanized steel rigid metal conduit elbows for bends.
   6. Where steel conduit is installed in direct contact with earth where soil has a resistivity of less than 2000 ohm-centimeters or is characterized as severely corrosive based on soils report or local experience, use corrosion protection tape to provide supplementary corrosion protection or use PVC-coated galvanized steel rigid metal conduit.

D. Concealed Within Masonry Walls: Use galvanized steel rigid metal conduit.

E. Concealed Within Hollow Stud Walls: Use electrical metallic tubing (EMT).

F. Concealed Above Accessible Ceilings: Use electrical metallic tubing (EMT).

G. Interior, Damp or Wet Locations: Use galvanized steel rigid metal conduit.

H. Interrior Mechanical room or boiler room: Use galvanised steel rigid metal conduit.

I. Exposed, Interior, Subject to Physical Damage: Use galvanized steel rigid metal conduit.
   1. Locations subject to physical damage include, but are not limited to:
      a. Where exposed below 10 feet, except within electrical and communication rooms or closets.
      b. Where exposed below 20 feet in warehouse areas.

J. Exposed, Exterior: Use galvanized steel rigid metal conduit.

K. Concealed, Exterior, Not Embedded in Concrete or in Contact With Earth: Use galvanized steel rigid metal conduit.

2.02 CONDUIT REQUIREMENTS

A. Existing Work: Where existing conduits are indicated to be reused, they may be reused only where they comply with specified requirements, are free from corrosion, and integrity is verified by pulling a mandrel through them.

B. Electrical Service Conduits: Also comply with Section 26 27 01.

C. Communications Systems Conduits: Also comply with Section 27 10 05.

D. Fittings for Grounding and Bonding: Also comply with Section 26 05 26.

E. Provide all conduit, fittings, supports, and accessories required for a complete raceway system.

F. Provide products listed, classified, and labeled by Underwriter's Laboratories Inc. (UL) or testing firm acceptable to authority having jurisdiction as suitable for the purpose indicated.

G. Minimum Conduit Size, Unless Otherwise Indicated:
   1. Branch Circuits: 3/4 inch (21 mm) trade size.
   2. Branch Circuit Homeruns: 3/4 inch (21 mm) trade size.
   3. Control Circuits: 1/2 inch (16 mm) trade size.

H. Where conduit size is not indicated, size to comply with NFPA 70 but not less than applicable minimum size requirements specified.

2.03 GALVANIZED STEEL RIGID METAL CONDUIT (RMC)

A. Manufacturers:
   1. Allied Tube & Conduit: www.alliedeg.com.
   2. Republic Conduit: www.republic-conduit.com.
   3. Wheatland Tube Company: www.wheatland.com.
   4. Substitutions: See Section 01 60 00 - Product Requirements.

B. Description: NFPA 70, Type RMC galvanized steel rigid metal conduit complying with ANSI C80.1 and listed and labeled as complying with UL 6.

C. Fittings:
   1. Manufacturers:
      a. Bridgeport Fittings Inc: www.bptfittings.com.
      b. O-Z/Gedney, a brand of Emerson Industrial Automation: www.emersonindustrial.com.
      c. Thomas & Betts Corporation: www.tnb.com.
      d. Substitutions: See Section 01 60 00 - Product Requirements.
   2. Non-Hazardous Locations: Use fittings complying with NEMA FB 1 and listed and labeled as complying with UL 514B.
   3. Material: Use steel or malleable iron.
   4. Connectors and Couplings: Use threaded type fittings only. Threadless set screw and compression (gland) type fittings are not permitted.

2.04 METAL CONDUIT

A. Manufacturers:
   1. Allied Tube & Conduit: www.alliedtube.com.

2. Beck Manufacturing, Inc: www.beckmfg.com.
3. Wheatland Tube Company: www.wheatland.com.
4. Substitutions: See Section 01 60 00 - Product Requirements.

B. Rigid Steel Conduit: ANSI C80.1.

C. Fittings and Conduit Bodies: NEMA FB 1; material to match conduit.

2.05 FLEXIBLE METAL CONDUIT (FMC)

A. Manufacturers:
1. AFC Cable Systems, Inc: www.afcweb.com.
2. Electri-Flex Company: www.electriflex.com.
3. International Metal Hose: www.metalhose.com.
4. Substitutions: See Section 01 60 00 - Product Requirements.

B. Description: NFPA 70, Type FMC standard wall steel flexible metal conduit listed and labeled as complying with UL 1, and listed for use in classified firestop systems to be used.

C. Fittings:
1. Manufacturers:
a. Bridgeport Fittings Inc: www.bptfittings.com.
b. Thomas & Betts Corporation: www.tnb.com.
c. Substitutions: See Section 01 60 00 - Product Requirements.
2. Description: Fittings complying with NEMA FB 1 and listed and labeled as complying with UL 514B.
3. Material: Use steel or malleable iron.

D. Description: Interlocked steel construction.

E. Fittings: NEMA FB 1.

2.06 LIQUIDTIGHT FLEXIBLE METAL CONDUIT (LFMC)

A. Manufacturers:
1. AFC Cable Systems, Inc; Model _____: www.afcweb.com.
2. Electri-Flex Company; Model _____: www.electriflex.com.
3. International Metal Hose; Model _____: www.metalhose.com.
4. Substitutions: See Section 01 60 00 - Product Requirements.

B. Description: NFPA 70, Type LFMC polyvinyl chloride (PVC) jacketed steel flexible metal conduit listed and labeled as complying with UL 360.

C. Fittings:
1. Manufacturers:
a. Bridgeport Fittings Inc: www.bptfittings.com.
b. O-Z/Gedney, a brand of Emerson Industrial Automation: www.emersonindustrial.com.
c. Thomas & Betts Corporation: www.tnb.com.
d. Substitutions: See Section 01 60 00 - Product Requirements.
2. Description: Fittings complying with NEMA FB 1 and listed and labeled as complying with UL 514B.
3. Material: Use steel or malleable iron.

2.07 ELECTRICAL METALLIC TUBING (EMT)

A. Manufacturers:
1. Allied Tube & Conduit: www.alliedeg.com.

2. Republic Conduit: www.republic-conduit.com.
3. Wheatland Tube Company: www.wheatland.com.
4. Substitutions: See Section 01 60 00 - Product Requirements.

B. Description: NFPA 70, Type EMT steel electrical metallic tubing complying with ANSI C80.3 and listed and labeled as complying with UL 797.

C. Fittings:
1. Manufacturers:
a. Bridgeport Fittings Inc: www.bptfittings.com.
b. O-Z/Gedney, a brand of Emerson Industrial Automation: www.emersonindustrial.com.
c. Thomas & Betts Corporation: www.tnb.com.
d. Substitutions: See Section 01 60 00 - Product Requirements.
2. Description: Fittings complying with NEMA FB 1 and listed and labeled as complying with UL 514B.
3. Material: Use steel or malleable iron.
4. Connectors and Couplings: Use compression (gland) or set-screw type.
a. Do not use indenter type connectors and couplings.

2.08 RIGID POLYVINYL CHLORIDE (PVC) CONDUIT

A. Manufacturers:
1. Cantex Inc: www.cantexinc.com.
2. Carlon, a brand of Thomas & Betts Corporation: www.carlon.com.
3. JM Eagle: www.jmeagle.com.
4. _____.
5. Substitutions: See Section 01 60 00 - Product Requirements.

B. Description: NFPA 70, Type PVC rigid polyvinyl chloride conduit complying with NEMA TC 2 and listed and labeled as complying with UL 651; Schedule 40 unless otherwise indicated, Schedule 80 where subject to physical damage; rated for use with conductors rated 90 degrees C.

C. Fittings:
1. Manufacturer: Same as manufacturer of conduit to be connected.
2. Description: Fittings complying with NEMA TC 3 and listed and labeled as complying with UL 651; material to match conduit.

2.09 ACCESSORIES

A. Corrosion Protection Tape: PVC-based, minimum thickness of 20 mil.

B. Conduit Joint Compound: Corrosion-resistant, electrically conductive; suitable for use with the conduit to be installed.

C. Solvent Cement for PVC Conduit and Fittings: As recommended by manufacturer of conduit and fittings to be installed.

PART 3 EXECUTION

3.01 EXAMINATION

A. Verify that field measurements are as shown on drawings.

B. Verify that mounting surfaces are ready to receive conduits.

C. Verify that conditions are satisfactory for installation prior to starting work.

D. Verify routing and termination locations of conduit prior to rough-in.

E. Conduit routing is shown on drawings in approximate locations unless dimensioned. Route as required to complete wiring system.

3.02 INSTALLATION

A. Install products in accordance with manufacturer's instructions.

B. Install conduit in a neat and workmanlike manner in accordance with NECA 1.

C. Install galvanized steel rigid metal conduit (RMC) in accordance with NECA 101.

D. Install rigid polyvinyl chloride (PVC) conduit in accordance with NECA 111.

E. Conduit Support:
   1. Secure and support conduits in accordance with NFPA 70 and Section 26 05 29 using suitable supports and methods approved by the authority having jurisdiction.
   2. Provide independent support from building structure. Do not provide support from piping, ductwork, or other systems.

F. Connections and Terminations:
   1. Use approved zinc-rich paint or conduit joint compound on field-cut threads of galvanized steel conduits prior to making connections.
   2. Where two threaded conduits must be joined and neither can be rotated, use three-piece couplings or split couplings. Do not use running threads.
   3. Use suitable adapters where required to transition from one type of conduit to another.
   4. Provide drip loops for liquidtight flexible conduit connections to prevent drainage of liquid into connectors.
   5. Terminate threaded conduits in boxes and enclosures using threaded hubs or double lock nuts for dry locations and raintight hubs for wet locations.
   6. Provide insulating bushings or insulated throats at all conduit terminations to protect conductors.
   7. Secure joints and connections to provide maximum mechanical strength and electrical continuity.

G. Penetrations:
   1. Do not penetrate or otherwise notch or cut structural members, including footings and grade beams, without approval of Structural Engineer.
   2. Make penetrations perpendicular to surfaces unless otherwise indicated.
   3. Provide sleeves for penetrations as indicated or as required to facilitate installation. Set sleeves flush with exposed surfaces unless otherwise indicated or required.
   4. Conceal bends for conduit risers emerging above ground.
   5. Seal interior of conduits entering the building from underground at first accessible point to prevent entry of moisture and gases.
   6. Where conduits penetrate waterproof membrane, seal as required to maintain integrity of membrane.
   7. Make penetrations for roof-mounted equipment within associated equipment openings and curbs where possible to minimize roofing system penetrations. Where penetrations are necessary, seal as indicated or as required to preserve integrity of roofing system and maintain roof warranty. Include proposed locations of penetrations and methods for sealing with submittals.
   8. Install firestopping to preserve fire resistance rating of partitions and other elements, using materials and methods specified in Section 07 84 00.

H. Conduit Movement Provisions: Where conduits are subject to movement, provide expansion and expansion/deflection fittings to prevent damage to enclosed conductors or connected equipment. This includes, but is not limited to:
   1. Where conduits cross structural joints intended for expansion, contraction, or deflection.
   2. Where conduits are subject to earth movement by settlement or frost.

I. Condensation Prevention: Where conduits cross barriers between areas of potential substantial temperature differential, provide sealing fitting or approved sealing compound at an accessible point near the penetration to prevent condensation. This includes, but is not limited to:
   1. Where conduits pass from outdoors into conditioned interior spaces.
   2. Where conduits pass from unconditioned interior spaces into conditioned interior spaces.

J. Provide grounding and bonding in accordance with Section 26 05 26.

3.03 INTERFACE WITH OTHER PRODUCTS

A. Install conduit to preserve fire resistance rating of partitions and other elements, using materials and methods specified in Section 07 84 00.

B. Route conduit through roof openings for piping and ductwork wherever possible. Where separate roofing penetration is required, coordinate location and installation method with roofing installation specified in Section roofing section.

END OF SECTION

SECTION 26 05 35

SURFACE RACEWAYS

PART 1 GENERAL

1.01 SECTION INCLUDES

A. Surface raceway systems.

B. Wireways.

1.02 RELATED REQUIREMENTS

A. Section 26 05 26 - Grounding and Bonding for Electrical Systems.

B. Section 26 05 29 - Hangers and Supports for Electrical Systems.
   1. Includes metal channel (strut) used as raceway.

C. Section 26 05 34 - Conduit.

D. Section 26 05 37 - Boxes.

E. Section 26 05 53 - Identification for Electrical Systems: Identification products and requirements.

F. Section 26 27 26 - Wiring Devices: Receptacles.

G. Section 27 10 05 - Structured Cabling for Voice and Data - Inside-Plant: Voice and data jacks.

1.03 REFERENCE STANDARDS

A. NECA 1 - Standard for Good Workmanship in Electrical Construction; National Electrical Contractors Association.

B. NFPA 70 - National Electrical Code; National Fire Protection Association.

C. UL 5 - Surface Metal Raceways and Fittings.

D. UL 111 - Outline of Investigation for Multioutlet Assemblies.

1.04 ADMINISTRATIVE REQUIREMENTS

A. Coordination:
   1. Coordinate the placement of raceways with millwork, furniture, equipment, etc. installed under other sections or by others.
   2. Coordinate rough-in locations of outlet boxes provided under Section 26 05 37 and conduit provided under Section 26 05 34 as required for installation of raceways provided under this section.
   3. Verify minimum sizes of raceways with the actual conductors and components to be installed.
   4. Notify Architect of any conflicts with or deviations from the contract documents. Obtain direction before proceeding with work.

B. Sequencing:
   1. Do not install raceways until final surface finishes and painting are complete.
   2. Do not begin installation of conductors and cables until installation of raceways is complete between outlet, junction and splicing points.

1.05 SUBMITTALS

A. See Section 01 30 00 - Administrative Requirements, for submittal procedures.

B. Product Data: Provide manufacturer's standard catalog pages and data sheets including dimensions, knockout sizes and locations, materials, fabrication details, finishes, service condition requirements, and accessories.
   1. Surface Raceway Systems: Include information on fill capacities for conductors and cables.

C. Manufacturer's Instructions: Indicate application conditions and limitations of use stipulated by product testing agency. Include instructions for storage, handling, protection, examination, preparation, and installation of product.

1.06 QUALITY ASSURANCE

A. Conform to requirements of NFPA 70.

B.

C. Maintain at the project site a copy of each referenced document that prescribes execution requirements.

D. Manufacturer Qualifications: Company specializing in manufacturing the products specified in this section with minimum three years documented experience.

1.07 DELIVERY, STORAGE, AND HANDLING

A. Receive, inspect, handle, and store products in accordance with manufacturer's instructions.

PART 2 PRODUCTS

2.01 RACEWAY REQUIREMENTS

A. Provide all components, fittings, supports, and accessories required for a complete raceway system.

B. Provide products listed, classified, and labeled by Underwriter's Laboratories Inc. (UL), Intertek (ETL), or testing firm acceptable to authority having jurisdiction as suitable for the purpose indicated.

C. Do not use raceways for applications other than as permitted by NFPA 70 and product listing.

2.02 SURFACE RACEWAY SYSTEMS

A. Manufacturers:
   1. Hubbell Incorporated: www.hubbell-wiring.com.
   2. Wiremold, a brand of Legrand North America, Inc: www.legrand.us.
   3. Substitutions: See Section 01 60 00 - Product Requirements.

B. Surface Metal Raceways: Listed and labeled as complying with UL 5.

C. Multioutlet Assemblies: Listed and labeled as complying with UL 111.

D. Metal Channel (Strut) Used as Raceway: Comply with Section 26 05 29.

E. Type DS-4000 - Surface Raceway System:
   1. Raceway Type: Two channel, painted steel.
   2. Size: 4 3/4"_ by 1 3/4 " inches.
   3. Length: As indicated on the drawings.
   4. Color: To be selected by Architect.

5. Accessory Device Boxes: Suitable for the devices to be installed; color to match raceway.
6. Integrated Device Provisions:
   a. Receptacles:
      1) Comply with Section 26 27 26, except for finishes.
      2) Configuration: As indicated on the drawings.
      3) Color: Match raceway.
      4) Spacing: As indicated on the drawings.
   b. Communications Outlets:
      1) Voice and Data Jacks: As specified in Section 27 10 05.
      2) Configuration: As indicated on the drawings.
      3) Spacing: As indicated on the drawings.
7. Products:
   a. _Pass & Seymour.
   b. Wiremold_.
   c. Substitutions: See Section 01 60 00 - Product Requirements.
8. Applications:
   a. Class rooms, Hallways and Labs.

2.03 SOURCE QUALITY CONTROL

A. See Section 01 40 00 - Quality Requirements, for additional requirements.

PART 3 EXECUTION

3.01 EXAMINATION

A. Verify that field measurements are as shown on the drawings.

B. Verify that outlet boxes and conduit terminations are installed in proper locations and are properly sized in accordance with NFPA 70 to accommodate raceways.

C. Verify that mounting surfaces are ready to receive raceways and that final surface finishes are complete, including painting.

D. Verify that conditions are satisfactory for installation prior to starting work.

3.02 INSTALLATION

A. Install products in accordance with manufacturer's instructions.

B. Install raceways in a neat and workmanlike manner in accordance with NECA 1.

C. Install raceways plumb and level.

D. Secure and support raceways in accordance with Section 26 05 29 at intervals complying with NFPA 70 and manufacturer's requirements.

E. Close unused raceway openings.

F. Provide grounding and bonding in accordance with Section 26 05 26.

G. Identify raceways in accordance with Section 26 05 53.

3.03 FIELD QUALITY CONTROL

A. See Section 01 40 00 - Quality Requirements, for additional requirements.

B. Inspect raceways for damage and defects.

C. Surface Raceway Systems with Integrated Devices: Test each wiring device to verify operation and proper polarity.

D. Correct wiring deficiencies and replace damaged or defective raceways.

3.04 CLEANING

A. Clean exposed surfaces to remove dirt, paint, or other foreign material and restore to match original factory finish.

3.05 PROTECTION

A. Protect installed raceways from subsequent construction operations.

END OF SECTION

SECTION 26 05 37

BOXES

PART 1 GENERAL

1.01 SECTION INCLUDES

A. Outlet and device boxes up to 100 cubic inches, including those used as junction and pull boxes.

B. Cabinets and enclosures, including junction and pull boxes larger than 100 cubic inches.

C. Wall and ceiling outlet boxes.

D. Floor boxes.

E. Pull and junction boxes.

1.02 RELATED REQUIREMENTS

A. Section 07 84 00 - Firestopping.

B. Section 26 05 26 - Grounding and Bonding for Electrical Systems.

C. Section 26 05 29 - Hangers and Supports for Electrical Systems.

D. Section 26 27 26 - Wiring Devices:
   1. Wall plates.

E. Section 26 27 16 - Electrical Cabinets and Enclosures.

F. Section 26 27 26 - Wiring Devices: Wall plates in finished areas, floor box service fittings, fire-rated poke-through fittings, and access floor boxes.

1.03 REFERENCE STANDARDS

A. NECA 1 - Standard for Good Workmanship in Electrical Construction; National Electrical Contractors Association.

B. NECA 130 - Standard for Installing and Maintaining Wiring Devices; National Electrical Contractors Association.

C. NEMA FB 1 - Fittings, Cast Metal Boxes, and Conduit Bodies for Conduit, Electrical Metallic Tubing, and Cable; National Electrical Manufacturers Association (ANSI/NEMA FB 1).

D. NEMA OS 1 - Sheet-Steel Outlet Boxes, Device Boxes, Covers, and Box Supports; National Electrical Manufacturers Association (ANSI/NEMA OS 1).

E. NEMA OS 2 - Nonmetallic Outlet Boxes, Device Boxes, Covers and Box Supports; National Electrical Manufacturers Association (ANSI/NEMA OS 2).

F. NEMA 250 - Enclosures for Electrical Equipment (1000 Volts Maximum); National Electrical Manufacturers Association.

G. NFPA 70 - National Electrical Code; National Fire Protection Association.

H. UL 50 - Enclosures for Electrical Equipment, Non-Environmental Considerations.

I. UL 50E - Enclosures for Electrical Equipment, Environmental Considerations.

J. UL 508A - Industrial Control Panels.

K. UL 514A - Metallic Outlet Boxes.

1.04 ADMINISTRATIVE REQUIREMENTS

A. Coordination:
   1. Coordinate the work with other trades to avoid placement of ductwork, piping, equipment, or other potential obstructions within the dedicated equipment spaces and working clearances for electrical equipment required by NFPA 70.
   2. Coordinate arrangement of electrical equipment with the dimensions and clearance requirements of the actual equipment to be installed.
   3. Coordinate minimum sizes of boxes with the actual installed arrangement of conductors, clamps, support fittings, and devices, calculated according to NFPA 70.
   4. Coordinate minimum sizes of pull boxes with the actual installed arrangement of connected conduits, calculated according to NFPA 70.
   5. Coordinate the placement of boxes with millwork, furniture, devices, equipment, etc. installed under other sections or by others.
   6. Coordinate the work with other trades to preserve insulation integrity.
   7. Coordinate the work with other trades to provide walls suitable for installation of flush-mounted boxes where indicated.
   8. Notify Architect of any conflicts with or deviations from the contract documents. Obtain direction before proceeding with work.

1.05 SUBMITTALS

A. See Section 01 30 00 - Administrative Requirements, for submittal procedures.

B. Project Record Documents: Record actual locations and mounting heights of outlet, pull, and junction boxes on project record documents.

1.06 QUALITY ASSURANCE

A. Conform to requirements of NFPA 70.

PART 2 PRODUCTS

2.01 BOXES

A. General Requirements:
   1. Do not use boxes and associated accessories for applications other than as permitted by NFPA 70 and product listing.
   2. Provide all boxes, fittings, supports, and accessories required for a complete raceway system and to accommodate devices and equipment to be installed.
   3. Provide products listed, classified, and labeled by Underwriter's Laboratories Inc. (UL) or testing firm acceptable to authority having jurisdiction as suitable for the purpose indicated.
   4. Where box size is not indicated, size to comply with NFPA 70 but not less than applicable minimum size requirements specified.
   5. Provide grounding terminals within boxes where equipment grounding conductors terminate.

B. Outlet and Device Boxes Up to 100 cubic inches, Including Those Used as Junction and Pull Boxes:
   1. Use sheet-steel boxes for dry locations unless otherwise indicated or required.
   2. Use cast iron boxes or cast aluminum boxes for damp or wet locations unless otherwise indicated or required; furnish with compatible weatherproof gasketed covers.
   3. Use suitable concrete type boxes where flush-mounted in concrete.
   4. Use suitable masonry type boxes where flush-mounted in masonry walls.

5. Use raised covers suitable for the type of wall construction and device configuration where required.
6. Use shallow boxes where required by the type of wall construction.
7. Do not use "through-wall" boxes designed for access from both sides of wall.
8. Sheet-Steel Boxes: Comply with NEMA OS 1, and list and label as complying with UL 514A.
9. Cast Metal Boxes: Comply with NEMA FB 1, and list and label as complying with UL 514A; furnish with threaded hubs.
10. Boxes for Supporting Luminaires and Ceiling Fans: Listed as suitable for the type and weight of load to be supported; furnished with fixture stud to accommodate mounting of luminaire where required.
11. Boxes for Ganged Devices: Use multigang boxes of single-piece construction. Do not use field-connected gangable boxes.
12. Wall Plates: Comply with Section 26 27 26.

C. Cabinets and Enclosures, Including Junction and Pull Boxes Larger Than 100 cubic inches:
1. Comply with NEMA 250, and list and label as complying with UL 50 and UL 50E, or UL 508A.
2. NEMA 250 Environment Type, Unless Otherwise Indicated:
3. Junction and Pull Boxes Larger Than 100 cubic inches:
a. Provide screw-cover or hinged-cover enclosures unless otherwise indicated.

2.02 MANUFACTURERS

A. Appleton Electric: www.appletonelec.com.

B. Steel City

C. Substitutions: Reco, Inc. See Section 01 60 00 - Product Requirements.

2.03 OUTLET BOXES

A. Sheet Metal Outlet Boxes: NEMA OS 1, galvanized steel.
1. Luminaire and Equipment Supporting Boxes: Rated for weight of equipment supported; include 1/2 inch male fixture studs where required.
2. Concrete Ceiling Boxes: Concrete type.

B. Nonmetallic Outlet Boxes: NEMA OS 2.

C. Cast Boxes: NEMA FB 1, Type FD, aluminum. Provide gasketed cover by box manufacturer. Provide threaded hubs.

D. Wall Plates for Finished Areas: As specified in Section 26 27 26.

2.04 FLOOR BOXES

A. Floor Boxes: NEMA OS 1, fully adjustable, _4 inches deep.

B. Material: Cast metal.

C. Shape: Rectangular.

D. Service Fittings: As specified in Section 26 27 26.

2.05 PULL AND JUNCTION BOXES

A. Sheet Metal Boxes: NEMA OS 1, galvanized steel.

B. Hinged Enclosures: As specified in Section 26 27 16.

C. Surface Mounted Cast Metal Box: NEMA 250, Type 4; flat-flanged, surface mounted junction box:
   1. Material: Galvanized cast iron; Cast Aluminum.
   2. Cover: Furnish with ground flange, neoprene gasket, and stainless steel cover screws.

D. In-Ground Cast Metal Box: NEMA 250, Type 6, outside flanged, recessed cover box for flush mounting:
   1. Material: Galvanized cast iron; Cast Aluminum.
   2. Cover: Nonskid cover with neoprene gasket and stainless steel cover screws.
   3. Cover Legend: "ELECTRIC".

PART 3 EXECUTION

3.01 EXAMINATION

3.02

A. Verify that field measurements are as shown on drawings.

B. Verify that mounting surfaces are ready to receive boxes.

C. Verify that conditions are satisfactory for installation prior to starting work.

D. Verify locations of floor boxes and outlets in offices and work areas prior to rough-in.

3.03 INSTALLATION

A. Install products in accordance with manufacturer's instructions.

B. Perform work in a neat and workmanlike manner in accordance with NECA 1 and, where applicable, NECA 130, including mounting heights specified in those standards where mounting heights are not indicated.

C. Arrange equipment to provide minimum clearances in accordance with manufacturer's instructions and NFPA 70.

D. Box Supports:
   1. Secure and support boxes in accordance with NFPA 70 and Section 26 05 29 using suitable supports and methods approved by the authority having jurisdiction.
   2. Provide independent support from building structure except for cast metal boxes (other than boxes used for fixture support) supported by threaded conduit connections in accordance with NFPA 70. Do not provide support from piping, ductwork, or other systems.

E. Install boxes plumb and level.

F. Flush-Mounted Boxes:
   1. Install boxes in noncombustible materials such as concrete, tile, gypsum, plaster, etc. so that front edge of box or associated raised cover is not set back from finished surface more than 1/4 inch or does not project beyond finished surface.
   2. Install boxes in combustible materials such as wood so that front edge of box or associated raised cover is flush with finished surface.
   3. Repair rough openings around boxes in noncombustible materials such as concrete, tile, gypsum, plaster, etc. so that there are no gaps or open spaces greater than 1/8 inch at the edge of the box.

G. Install boxes as required to preserve insulation integrity.

H. Install permanent barrier between ganged wiring devices when voltage between adjacent devices exceeds 300 V.

I. Install firestopping to preserve fire resistance rating of partitions and other elements, using materials and methods specified in Section 07 84 00.

J. Close unused box openings.

K. Install blank wall plates on junction boxes and on outlet boxes with no devices or equipment installed or designated for future use.

L. Provide grounding and bonding in accordance with Section 26 05 26.

M. Install boxes securely, in a neat and workmanlike manner, as specified in NECA 1.

N. Install in locations as shown on Drawings, and as required for splices, taps, wire pulling, equipment connections, and as required by NFPA 70.

O. Coordinate installation of outlet boxes for equipment connected under Section 26 27 17.

P. Set wall mounted boxes at elevations to accommodate mounting heights indicated.

Q. Electrical boxes are shown on Drawings in approximate locations unless dimensioned.
   1. Adjust box locations up to 10 feet if required to accommodate intended purpose.

R. Orient boxes to accommodate wiring devices oriented as specified in Section 26 27 26.

S. Maintain headroom and present neat mechanical appearance.

T. Install pull boxes and junction boxes above accessible ceilings and in unfinished areas only.

U. Inaccessible Ceiling Areas: Install outlet and junction boxes no more than 6 inches from ceiling access panel or from removable recessed luminaire.

V. Install boxes to preserve fire resistance rating of partitions and other elements, using materials and methods specified in Section 07 84 00.

W. Coordinate mounting heights and locations of outlets mounted above counters, benches, and backsplashes.

X. Locate outlet boxes to allow luminaires positioned as shown on reflected ceiling plan.

Y. Align adjacent wall mounted outlet boxes for switches, thermostats, and similar devices.

Z. Use flush mounting outlet box in finished areas.

AA. Locate flush mounting box in masonry wall to require cutting of masonry unit corner only. Coordinate masonry cutting to achieve neat opening.

AB. Do not install flush mounting box back-to-back in walls; provide minimum 6 inches separation. Provide minimum 24 inches separation in acoustic rated walls.

AC. Secure flush mounting box to interior wall and partition studs. Accurately position to allow for surface finish thickness.

AD. Use stamped steel bridges to fasten flush mounting outlet box between studs.

AE. Install flush mounting box without damaging wall insulation or reducing its effectiveness.

AF. Use adjustable steel channel fasteners for hung ceiling outlet box.

AG. Do not fasten boxes to ceiling support wires.

AH. Support boxes independently of conduit, except cast box that is connected to two rigid metal conduits both supported within 12 inches of box.

AI. Use gang box where more than one device is mounted together. Do not use sectional box.

AJ. Use gang box with plaster ring for single device outlets.

AK. Use cast outlet box in exterior locations exposed to the weather and wet locations.

AL. Use cast floor boxes for installations in slab on grade; formed steel boxes are acceptable for other installations.

AM. Set floor boxes level.

AN. Large Pull Boxes: Use hinged enclosure in interior dry locations, surface-mounted cast metal box in other locations.

3.04 ADJUSTING

A. Adjust floor boxes flush with finish flooring material.

B. Adjust flush-mounting outlets to make front flush with finished wall material.

C. Install knockout closures in unused box openings.

3.05 CLEANING

A. Clean interior of boxes to remove dirt, debris, plaster and other foreign material.

3.06 PROTECTION

A. Immediately after installation, protect boxes from entry of moisture and foreign material until ready for installation of conductors.

END OF SECTION

SECTION 26 05 53

IDENTIFICATION FOR ELECTRICAL SYSTEMS

PART 1 GENERAL

1.01 SECTION INCLUDES

A. Electrical identification requirements.

B. Identification nameplates and labels.

C. Wire and cable markers.

D. Voltage markers.

E. Warning signs and labels.

F. Field-painted identification of conduit.

1.02 RELATED REQUIREMENTS

A. Section 09 90 00 - Painting and Coating.

1.03 REFERENCE STANDARDS

A. ANSI Z535.2 - American National Standard for Environmental and Facility Safety Signs.

B. ANSI Z535.4 - American National Standard for Product Safety Signs and Labels.

C. NFPA 70 - National Electrical Code; National Fire Protection Association.

D. UL 969 - Marking and Labeling Systems.

1.04 SUBMITTALS

A. See Section 01 30 00 - Administrative Requirements for submittals procedures.

B. Product Data: Provide catalog data for nameplates, labels, and markers.

C. Manufacturer's Instructions: Indicate application conditions and limitations of use stipulated by product testing agency. Include instructions for storage, handling, protection, examination, preparation and installation of product.

1.05 QUALITY ASSURANCE

A. Conform to requirements of NFPA 70.

1.06 EXTRA MATERIALS

A. See Section 01 60 00 - Product Requirements for additional requirements.

PART 2 PRODUCTS

2.01 IDENTIFICATION REQUIREMENTS

A. Identification for Equipment:
   1. Use identification nameplate to identify each piece of electrical distribution and control equipment and associated sections, compartments, and components.

B. Identification for Conductors and Cables:
   1. Color Coding for Power Conductors 600 V and Less: Comply with Section 26 05 19.

2. Use identification nameplate or identification label to identify color code for ungrounded and grounded power conductors inside door or enclosure at each piece of feeder or branch-circuit distribution equipment when premises has feeders or branch circuits served by more than one nominal voltage system.

2.02 MANUFACTURERS

A. Brady Corporation: www.bradycorp.com.

B. Seton Identification Products: www.seton.com/aec.

C. HellermannTyton: www.hellermanntyton.com.

D. Substitutions: See Section 01 60 00 - Product Requirements.

2.03 IDENTIFICATION NAMEPLATES AND LABELS

A. Identification Nameplates:
1. Materials:
2. Mounting Holes for Mechanical Fasteners: Two, centered on sides for sizes up to 1 inch high; Four, located at corners for larger sizes.

B. Identification Labels:
1. Materials: Use self-adhesive laminated plastic labels; UV, chemical, water, heat, and abrasion resistant.
2. Text: Use factory pre-printed or machine-printed text. Do not use handwritten text unless otherwise indicated.

C. Nameplates: Engraved three-layer laminated plastic, black letters on white background.

D. Locations:
1. Each electrical distribution and control equipment enclosure.
2. Communication cabinets.
3. Disconnect switches, and starters.

E. Letter Size:
1. Use 1/8 inch letters for identifying individual equipment and loads.
2. Use 1/4 inch letters for identifying grouped equipment and loads.

2.04 WIRE AND CABLE MARKERS

A. Manufacturers:
1. Panduit Corp.
2. Substitutions: See Section 01 60 00 - Product Requirements.

B. Markers for Conductors and Cables: Use wrap-around self-adhesive vinyl cloth, wrap-around self-adhesive vinyl self-laminating, heat-shrink sleeve, plastic sleeve, plastic clip-on, or vinyl split sleeve type markers suitable for the conductor or cable to be identified.

C. Markers for Conductor and Cable Bundles: Use plastic marker tags secured by nylon cable ties.

D. Legend: Power source and circuit number or other designation indicated.

E. Text: Use factory pre-printed or machine-printed text, all capitalized unless otherwise indicated.

F. Minimum Text Height: 1/8 inch.

G. Color: Black text on white background unless otherwise indicated.

H. Description: split sleeve type wire markers.

I. Locations: Each conductor at panelboard gutters, pull boxes, outlet boxes, and junction boxes each load connection.

J. Legend:
   1. Power and Lighting Circuits: Branch circuit or feeder number indicated on drawings.
   2. Control Circuits: Control wire number indicated on shop drawings.

2.05 VOLTAGE MARKERS

A. Manufacturers: Panduit Corp
   1. Substitutions: See Section 01 60 00 - Product Requirements.

B. Minimum Size:
   1. Markers for Equipment: 1 1/8 by 4 1/2 inches.
   2. Markers for Conduits: As recommended by manufacturer for conduit size to be identified.
   3. Markers for Pull Boxes: 1 1/8 by 4 1/2 inches.
   4. Markers for Junction Boxes: 1/2 by 2 1/4 inches.

C. Legend:
   1. Markers for Voltage Identification: Highest voltage present.
   2. Markers for System Identification:
      a. Emergency Power System: Text "EMERGENCY".
      b. Other Systems: Type of service.

D. Color: Black text on orange background unless otherwise indicated.

E. Location: Furnish markers for each conduit longer than 6 feet.

F. Spacing: 20 feet on center.

G. Color:
   1. 480 Volt System: Brown.
   2. 208 Volt System: Yellow.
   3. Fire Alarm System: Red.

H. Legend:
   1. 480 Volt System: brown.
   2. 208 Volt System: yellow.
   3. Fire Alarm System: red.

2.06 WARNING SIGNS AND LABELS

A. Comply with ANSI Z535.2 or ANSI Z535.4 as applicable.

B. Warning Signs:
   1. Materials:
   2. Minimum Size: 7 by 10 inches unless otherwise indicated.

C. Warning Labels:
   1. Materials: Use factory pre-printed or machine-printed self-adhesive polyester, or self-adhesive vinyl labels; UV, chemical, water, heat, and abrasion resistant; produced using materials recognized to UL 969.
   2. Machine-Printed Labels: Use thermal transfer process printing machines and accessories recommended by label manufacturer.

3. Minimum Size: 2 by 4 inches unless otherwise indicated.

PART 3 EXECUTION

3.01 PREPARATION

A. Clean surfaces to receive adhesive products according to manufacturer's instructions.

B. Degrease and clean surfaces to receive nameplates and labels.

3.02 INSTALLATION

A. Install products in accordance with manufacturer's instructions.

B. Install identification products to be plainly visible for examination, adjustment, servicing, and maintenance. Unless otherwise indicated, locate products as follows:
   1. Surface-Mounted Equipment: Enclosure front.
   2. Flush-Mounted Equipment: Inside of equipment door.
   3. Free-Standing Equipment: Enclosure front; also enclosure rear for equipment with rear access.
   4. Elevated Equipment: Legible from the floor or working platform.
   5. Interior Components: Legible from the point of access.
   6. Conductors and Cables: Legible from the point of access.

C. Install identification products centered, level, and parallel with lines of item being identified.

D. Secure nameplates to exterior surfaces of enclosures using stainless steel screws and to interior surfaces using self-adhesive backing, or epoxy cement.

E. Install self-adhesive labels and markers to achieve maximum adhesion, with no bubbles or wrinkles and edges properly sealed.

END OF SECTION

SECTION 26 05 73

OVERCURRENT PROTECTIVE DEVICE COORDINATION STUDY

PART 1 GENERAL

1.01 SECTION INCLUDES

A. Performance requirements for overcurrent protective devices.

B. Short circuit study.

C. Coordination study and analysis.

1.02 RELATED REQUIREMENTS

A. Section 26 28 17 - Enclosed Circuit Breakers.

B. Section 26 24 13 - Switchboards: Overcurrent protective devices in switchboards.

C. Section 26 24 16 - Panelboards: Overcurrent protective devices in panelboards.

D. Section 26 28 13 - Fuses.

1.03 REFERENCE STANDARDS

A. IEEE 242 - IEEE Recommended Practice for Protection and Coordination of Industrial and Commercial Power Systems.

B. IEEE 399 - IEEE Recommended Practice for Industrial and Commercial Power Systems Analysis.

C. NFPA 70 - National Electrical Code.

1.04 SUBMITTALS

A. See Section 01 30 00 - Administrative Requirements, for submittal procedures.

B. Study Report: Submit protective device studies as specified, prior to submission of product data submittals or ordering or fabrication of protective devices.
   1. Include stamp or seal and signature of preparing engineer.

C. Field Engineer Qualifications.

D. Field Inspection Report: Show final adjusted settings of protective devices.

1.05 PROTECTIVE DEVICE STUDY

A. Analyze the specific electrical and utilization equipment (according to NEC definition), the actual protective devices to be used, and the actual feeder lengths to be installed.
   1. Study Methodology: Comply with requirements and recommendations of NFPA 70, IEEE 399, and IEEE 242.
   2. Report: State the methodology and rationale employed in making each type of calculation; identify computer software package(s) used.

B. One-Line Diagrams: Prepare schematic drawing of electrical distribution system, with all electrical equipment and wiring to be protected by the protective devices; identify nodes on the diagrams for reference on report that includes:
   1. Calculated fault impedance, X/R ratios, utility contribution, and short circuit values (asymmetric and symmetric) at the main switchboard bus and all downstream devices containing protective devices.

2. Breaker and fuse ratings.
3. Generator kW and voltage ratings, percent impedance, X/R ratios, and wiring connections.
4. Transformer kVA and voltage ratings, percent impedance, X/R ratios, and wiring connections.
5. Identification of each bus, with voltage.
6. Conduit materials, feeder sizes, actual lengths, and X/R ratios.

C. Short Circuit Study: Calculate the fault impedance to determine available 3-phase short circuit and ground fault currents at each bus and piece of equipment during normal conditions, alternate operations, emergency power conditions, and other operations that could result in maximum fault conditions.
1. Show fault currents available at key points in the system down to a fault current of 7,000 A at 480 V and 208 V.
2. Include motor contributions in determining the momentary and interrupting ratings of the protective devices.
3. Primary Fault Level Assumptions: Obtain data from utility company.
4. Report: Include all pertinent data used in calculations and for each device include:
   a. Device identification.
   b. Operating voltage.
   c. Protective device.
   d. Device rating.
   e. Calculated short circuit current, asymmetrical and symmetrical, and ground fault current.

D. Coordination Study: Perform an organized time-current analysis of each protective device in series from the individual device back to the primary source, under normal conditions, alternate operations, and emergency power conditions.
1. Graphically illustrate that adequate time separation exists between series devices, including upstream primary device.
2. Plot the specific time-current characteristics of each protective device on log-log paper.
3. Organize plots so that all upstream devices are clearly depicted on one sheet.
4. Also show the following on curve plot sheets:
   a. Device identification.
   b. Voltage and current transformer ratios for curves.
   c. 3-phase and 1-phase ANSI damage curves for each transformer.
   d. No-damage, melting, and clearing curves for fuses.
   e. Cable damage curves.
   f. Transformer inrush points.
   g. Maximum short circuit cutoff point.
   h. Simple one-line diagram for the portion of the system that each curve plot illustrates.
   i. Software report for each curve plot, labeled for identification.

E. Analysis: Determine ratings and settings of protective devices to minimize damage caused by a fault and so that the protective device closest to the fault will open first.
1. Required Ratings and Settings: Derive required ratings and settings of protective devices in consideration of upstream protective device settings and optimize system to ensure selective coordination.
2. Identify any equipment that is underrated as specified.
3. Identify specified protective devices that will not achieve required protection or coordination and cannot be field adjusted to do so, and for which adequate devices would involve a change to the contract sum.

4. In all cases where adequate protection or coordination cannot be achieved at no extra cost to Red Clay Consolidated School District, provide a discussion of alternatives and logical compromises for best achievable coordination.
5. Do not order, furnish, or install protective devices that do not meet performance requirements unless specifically approved by Architect.

F. Protective Device Rating and Setting Chart: Summarize in tabular format the required characteristics for each protective device based on the analysis; include:
1. Device identification.
2. Relay CT ratios, tap, time dial, and instantaneous pickup.
3. Circuit breaker sensor rating, long-time, short-time, and instantaneous settings, and time bands.
4. Fuse rating and type.
5. Ground fault pickup and time delay.
6. Input level and expected response time at two test points that are compatible with commonly available test equipment and the ratings of the protective device.
7. Highlight all devices that as furnished by Contractor will not achieve required protection.

1.06 QUALITY ASSURANCE

A. Computer Software for Study Preparation: Use the latest edition of commercially available software utilizing specified methodologies.
1. Acceptable Software Products:
a. Operation Technology, Inc; ETAP: www.etap.com.
b. SKM Systems Analysis, Inc; Power Tools for Windows: www.skm.com.

B. Contractor Responsibility: Provide all project-related data needed by study preparer, including equipment, wire sizes, insulation types, conduit types, and actual circuit lengths.

C. Red Clay Consolidated School District's Responsibility: Provide data on relevant Red Clay Consolidated School District power distribution equipment.

PART 2 PRODUCTS

2.01 PROTECTIVE DEVICES

A. Provide protective devices of ratings and settings as required so that the protective device closest to the fault will open first.

B. In addition to requirements specified elsewhere, provide overcurrent protective devices having ratings and settings in accordance with results of this analysis.

PART 3 EXECUTION

3.01 FIELD QUALITY CONTROL

A. Provide the services of a qualified field engineer and necessary tools and equipment to test, calibrate, and adjust the installed protective devices to conform to requirements determined by the coordination analysis.

B. Adjust installed protective devices having adjustable settings to conform to requirements determined by the coordination analysis.

C. Adjust solid-state protective modules for motors prior to applying load to motor.

D. Submit report showing final adjusted settings of all protective devices.

END OF SECTION

SECTION 26 09 19

ENCLOSED CONTACTORS

PART 1 GENERAL

1.01 SECTION INCLUDES

A. General purpose contactors.

B. Lighting contactors.

1.02 RELATED REQUIREMENTS

A. Section 26 05 29 - Hangers and Supports for Electrical Systems.

B. Section 26 05 53 - Identification for Electrical Systems: Identification products and requirements.

C. Section 26 28 13 - Fuses.

1.03 REFERENCE STANDARDS

A. NEMA ICS 2 - Industrial Control and Systems: Controllers, Contactors, and Overload Relays, Rated Not More Than 2000 Volts AC or 750 Volts DC; National Electrical Manufacturers Association.

B. NEMA ICS 5 - Industrial Control and Systems: Control Circuit and Pilot Devices; National Electrical Manufacturers Association.

C. NEMA ICS 6 - Industrial Control and Systems: Enclosures; National Electrical Manufacturers Association.

D. NEMA KS 1 - Enclosed and Miscellaneous Distribution Equipment Switches (600 Volts Maximum); National Electrical Manufacturers Association.

E. NETA STD ATS - Acceptance Testing Specifications for Electrical Power Distribution Equipment and Systems; International Electrical Testing Association.

F. NFPA 70 - National Electrical Code; National Fire Protection Association.

1.04 SUBMITTALS

A. See Section 01 30 00 - Administrative Requirements, for submittal procedures.

B. Product Data: Provide dimensions, size, voltage ratings and current ratings.

C. Manufacturer's Instructions: Indicate application conditions and limitations of use stipulated by product testing agency. Include instructions for storage, handling, protection, examination, preparation, and installation of product.

D. Maintenance Data: Include instructions for replacing and maintaining coil and contacts.

1.05 QUALITY ASSURANCE

A. Conform to requirements of NFPA 70.

B. Manufacturer Qualifications: Company specializing in manufacturing the products specified in this section with minimum three years documented experience and with service facilities within 100 miles of Project.

C. Products: Listed and classified by Underwriters Laboratories Inc. as suitable for the purpose specified and indicated.

PART 2 PRODUCTS

2.01 MANUFACTURERS

A. Allen-Bradley/Rockwell Automation: www.ab.com.

B. Eaton Corporation; Cutler-Hammer Products: www.eaton.com.

C. Schneider Electric; Square D Products: www.schneider-electric.us.

D. Substitutions: See Section 01 60 00 - Product Requirements.

2.02 GENERAL PURPOSE CONTACTORS

A. Description: NEMA ICS 2, AC general purpose magnetic contactor.

B. Coil operating voltage: 120 volts, 60 Hertz.

C. Poles: As required to match circuit configuration and control function.

D. Enclosure: NEMA ICS 6, Type 1.

E. Accessories:
   1. Selector Switch: ON/OFF/AUTOMATIC.
   2. Indicating Light: RED.
   3. Auxiliary Contacts: One, normally open.

2.03 LIGHTING CONTACTORS

A. Description: NEMA ICS 2, magnetic lighting contactor.

B. Configuration: Mechanically held, 3 wire control.

C. Coil operating voltage: 120 volts, 60 Hertz.

D. Poles: As required to match circuit configuration and control function.

E. Contact Rating: Match branch circuit overcurrent protection, considering derating for continuous loads.

F. Enclosure: NEMA ICS 6, Type 1.

G. Accessories:
   1. Selector Switch: ON/OFF/AUTOMATIC.
   2. Indicating Light: RED.
   3. Auxiliary Contacts: One, normally open.

2.04 ACCESSORIES

A. Auxiliary Contacts: NEMA ICS 2, 2 normally open contacts in addition to seal-in contact.

B. Cover Mounted Pilot Devices: NEMA ICS 5, oiltight type.

C. Pilot Device Contacts: NEMA ICS 5, Form Z, rated A150.

D. Pushbuttons: Lockable type.

E. Indicating Lights:, LED type.

F. Selector Switches: Rotary type.

G. Relays: NEMA ICS 2,.

H. Control Power Transformers: 120 volt secondary, 50 VA minimum, in each enclosed contactor. Provide fused primary and secondary, and bond unfused leg of secondary to enclosure.

2.05 DISCONNECTS

A. Combination Contactors: Combine contactor with disconnect in common enclosure.

B. Disconnects: Thermal magnetic circuit breaker with integral thermal and instantaneous magnetic trip in each pole; UL listed.

C. Disconnects: Fusible switch assembly; NEMA KS 1, enclosed knife switch with externally operable handle. Fuse clips: Designed to accommodate Class R fuses.

PART 3 EXECUTION

3.01 INSTALLATION

A. Install enclosed contactors where indicated, in accordance with manufacturer's instructions.

B. Install enclosed contactors plumb. Provide supports in accordance with Section 26 05 29.

C. Height: 5 ft to operating handle.

D. Provide fuses for fusible switches; refer to Section 26 28 13 for product requirements.

E. Provide engraved plastic nameplates; refer to Section 26 05 53 for product requirements and location.

3.02 FIELD QUALITY CONTROL

A. Perform field inspection and testing in accordance with Section 01 40 00.

B. Inspect and test in accordance with NETA STD ATS, except Section 4.

C. Perform applicable inspections and tests listed in NETA STD ATS, Section 7.16.1.

END OF SECTION

SECTION 26 22 00

LOW-VOLTAGE TRANSFORMERS

PART 1 GENERAL

1.01 SECTION INCLUDES

A. General purpose transformers.

B. K-factor transformers rated for nonlinear loads.

1.02 RELATED REQUIREMENTS

A. Section 03 30 00 - Cast-in-Place Concrete: Concrete equipment pads.

B. Section 26 05 26 - Grounding and Bonding for Electrical Systems.

C. Section 26 05 53 - Identification for Electrical Systems: Identification products and requirements.

D. Section 26 05 34 - Conduit: Flexible conduit connections.

E. Section 26 24 16 - Panelboards.

1.03 REFERENCE STANDARDS

A. IEEE C57.94 - Recommended Practice for Installation, Application, Operation, and Maintenance of Dry-Type General Purpose Distribution and Power Transformers.

B. IEEE C57.96 - Guide for Loading Dry-Type Distribution and Power Transformers.

C. NECA 1 - Standard for Good Workmanship in Electrical Construction.

D. NECA 409 - Standard for Installing and Maintaining Dry-Type Transformers.

E. NEMA ST 1 - Specialty Transformers (Except General Purpose Type); National Electrical Manufacturers Association.

F. NEMA ST 20 - Dry-Type Transformers for General Applications; National Electrical Manufacturers Association.

G. NEMA 250 - Enclosures for Electrical Equipment (1000 Volts Maximum)

H. NETA STD ATS - Acceptance Testing Specifications for Electrical Power Distribution Equipment and Systems; International Electrical Testing Association.

I. NFPA 70 - National Electrical Code; National Fire Protection Association.

J. UL 1561 - Standard for Dry-Type General Purpose and Power Transformers.

1.04 ADMINISTRATIVE REQUIREMENTS

A. Coordination: Coordinate the work with placement of support framing and anchors required for mounting of transformers.

B. NEMA TR-1/ANSI 57.12.51 and 57.12.50

C. Federal Register - US department of Energy, Office of Energy Efficiency and Renewable Energy, 10 CFR Part 30, July 29, 2004. Energy Conservation Program for Commercial and Industrial Equipment, Energy Conservaiton Standards for Distribution Transformers, Proposed Rule.

D. ANSI/ASHRAE/IESNA 90.1 - Energy Efficient Design on New Buildings Except Low- Rise Residential Buildings.
   1. Transformer selection based on optimizing the combination of no-load, part-load, and full-load losses without compromising operational and reliability requirements for the building.

E. ANSI/NEMA TP-1 - Guide for Determining Energy Efficiency for Distribution Transformers.
   1. For Reference only. US DOE deos not consider NEMA TP-1 efficiency levels to reflect low life cycle cost.

F. ANSI/NEMA TP-2 - Standard Test Method for Measuring Energy Consumption of Distribution Transformers.

G. IEEE C57.110-1998 - IEEE Recommended Practice for establishing transformer capability when feeding nonsinusoidal load currents.
   1. Transformers losses increase in proportion to the mix of electronic equipment in the overall load fed from transformer.

1.05 SUBMITTALS

A. See Section 01 30 00 - Administrative Requirements, for submittal procedures.

B. Product Data: Include voltage, kVA, impedance, tap configurations, insulation system class and rated temperature rise, efficiency, sound level, enclosure ratings, outline and support point dimensions, weight, required clearances, service condition requirements, and installed features.

C. Provide linear load efficiency data at 25 %, 35%, 50 %, 75 % , and 100 % full load.
   1. Vibration Isolators: Include attachment method and rated load and deflection.
   2. K-factor Rated Transformers: Include K-factor ratings.
   3. Shielded Transformers: Include shielding method and noise attenuation performance.

D. Shop Drawings: Provide dimensioned plan and elevation views of transformers and adjacent equipment with all required clearances indicated.

E. Source Quality Control Test Reports: Include reports for tests designated in NEMA ST 20 as design and routine tests.

F. Product Data: Provide outline and support point dimensions of enclosures and accessories, unit weight, voltage, kVA, and impedance ratings and characteristics, tap configurations, insulation system type, core and coil material and rated temperature rise.

G. Test Reports: Indicate loss data, efficiency at 0, 25, 50, 75 and 100 percent rated load, and sound level.

H. Manufacturer's Installation Instructions: Indicate application conditions and limitations of use stipulated by product testing agency. Include instructions for storage, handling, protection, examination, preparation, and installation of product.

I. Project Record Documents: Record actual locations of transformers.

1.06 QUALITY ASSURANCE

A. Conform to requirements of NFPA 70.

B. Maintain at the project site a copy of each referenced document that prescribes execution requirements.

C. Manufacturer Qualifications: Company specializing in manufacturing the products specified in this section with minimum three years documented experience.

D. Products: Listed and classified by Underwriters Laboratories Inc. as suitable for the purpose specified and indicated.

1.07 DELIVERY, STORAGE, AND HANDLING

A. Store in a clean, dry space. Maintain factory wrapping or provide an additional heavy canvas or heavy plastic cover to protect units from dirt, water, construction debris, and traffic.

B. Handle in accordance with manufacturer's written instructions. Lift only with lugs provided for the purpose. Handle carefully to avoid damage to transformer internal components, enclosure, and finish.

1.08 FIELD CONDITIONS

A. Ambient Temperature: Do not exceed 86 degrees F average or 104 degrees F maximum measured during any 24 hour period during and after installation of transformers.

1.09 WARRANTY

A. See Section 01 78 00 - Closeout Submittals, for additional warranty requirements.

PART 2 PRODUCTS

2.01 MANUFACTURERS

A. Schneider Electric; Square D Products; Premium 30 energy efficient: www.schneider-electric.us.

B. Eaton Electrical/Cutler-Hammer: www.eatonelectrical.com.

C. Powersmiths International Corp.

D. Substitutions: See Section 01 60 00 - Product Requirements.

2.02 ALL TRANSFORMERS

A. Description: High performance,energy efficient, copper wound transformer with 30 % less loses than NEMA TP_1 , K-13 rated. Factory-assembled, dry type transformers for 60 Hz operation designed and manufactured in accordance with NEMA ST 20 and listed and labeled by Underwriters Laboratories Inc. as suitable for the purpose specified and indicated.

B. Unless noted otherwise, transformer ratings indicated are for continuous loading according to IEEE C57.96 under the following service conditions:
   1. Altitude: Less than 3,300 feet.
   2. Ambient Temperature: Not exceeding 86 degrees F average or 104 degrees F maximum measured during any 24 hour period.

C. Core: High grade, non-aging silicon steel with high magnetic permeability and low hysteresis and eddy current losses. Keep magnetic flux densities substantially below saturation point, even at 10 percent primary overvoltage. Tightly clamp core laminations to prevent plate movement and maintain consistent pressure throughout core length.

D. Impregnate core and coil assembly with epoxy coploymer build 72 Mils@3.2 kv/mil(dielectric) to effectively seal out moisture and other contaminants.

E. Basic Impulse Level: 10 kV.

F. Ground core and coil assembly to enclosure by means of a visible flexible copper grounding strap.

G. Isolate core and coil from enclosure using vibration-absorbing mounts.

H. Nameplate: Include transformer connection data, ratings, wiring diagrams, and overload capacity based on rated winding temperature rise.

2.03 K-FACTOR TRANSFORMERS RATED FOR NONLINEAR LOADS

A. Description: Self-cooled, two winding transformers listed and labeled as complying with UL 1561, and designed to supply nonlinear loads to the degree designated by the UL defined K-factor; ratings as indicated on the drawings.

B. Primary Voltage: 480 volts delta, 3 phase.

C. Secondary Voltage: 208Y/120 volts, 3 phase.

D. Impedance: 5 % max

E. Minimum efficiency: 99.04 % at 35 % loading of nameplate with linear /resistive laod.

F. Temp Rise: 115 deg cent. (full linear load)

G. Impregnation:Epoxy copolymer build 72 mils@ 3.2kv/mil (dielectric)

H. K-factor Rating: K-13, or higher.

I. Insulation System and Allowable Average Winding Temperature Rise: Class 220 degrees C insulation system with 115 degrees C average winding temperature rise.

J. Coil Conductors: Continuous copper windings with terminations brazed internal connections. Individually insulate secondary conductors and arrange to minimize hysteresis and eddy current losses at harmonic frequencies. Size secondary neutral conductor at twice the secondary phase conductor ampacity.

K. Winding Taps: Two 2.5 percent full capacity primary taps above and four 2.5 percent full capacity primary taps below rated voltage.

L. Neutral Bus: Sized to accommodate twice the rated secondary current.

M. Energy Efficiency: Premium efficiency complying with CSL-3 efficiency requirements of DOE 10 CFR Part 431.

N. Sound Levels: Standard sound levels complying with NEMA ST 20.
   1. 151-300 kVA: 55 dB.

O. Mounting Provisions:
   1. Up to 75 kVA: Suitable for wall, floor, or trapeze mounting.
   2. Larger than 75 kVA: Suitable for floor mounting.

P. Electrostatic Shield: Provide grounded copper electrostatic shield between primary and secondary windings to attenuate electrical noise.

Q. Transformer Enclosure: Comply with NEMA ST 20.
   1. Environment Type per NEMA 250: Unless otherwise indicated, as specified for the following installation locations:
      a. Indoor clean, dry locations: Type 2.
   2. Construction: Heavy gage steel, ventilated.
   3. Finish: Manufacturer's standard grey, suitable for outdoor installations.

4. Provide lifting eyes or brackets.

R. Accessories:
1. Mounting Brackets: Provide manufacturer's standard brackets.
2. Lug Kits: Sized as required for termination of conductors as indicated on the drawings.

2.04 SOURCE QUALITY CONTROL

A. Factory test transformers according to NEMA ST 20.

B. Production test each unit according to NEMA ST 20.

PART 3 EXECUTION

3.01 EXAMINATION

A. Verify that field measurements are as shown on the drawings.

B. Verify that suitable support frames and anchors are installed where required and that mounting surfaces are ready to receive transformers.

C. Perform pre-installation tests and inspections on transformers per manufacturer's instructions and as specified in NECA 409. Correct deficiencies prior to installation.

D. Verify that conditions are satisfactory for installation prior to starting work.

3.02 INSTALLATION

A. Perform work in a neat and workmanlike manner in accordance with NECA 1.

B. Install transformers in accordance with manufacturer's instructions.

C. Install transformers in accordance with NECA 409 and IEEE C57.94.

D. Use flexible conduit, under the provisions of Section 26 05 34, 2 feet minimum length, for connections to transformer case. Make conduit connections to side panel of enclosure.

E. Arrange equipment to provide minimum clearances as specified on transformer nameplate and in accordance with manufacturer's instructions and NFPA 70.

F. Set transformers plumb and level.

G. Mount floor-mounted transformers on properly sized 4 inch high concrete pad constructed in accordance with Section 03 30 00.

H. Mount floor-mounted transformers using vibration isolators suitable for isolating the transformer noise from the building structure.

I. Mount floor-mounted transformers on vibration isolating pads suitable for isolating the transformer noise from the building structure.

J. Mount trapeze-mounted transformers as indicated.

K. Provide seismic restraints.

L. Provide grounding and bonding in accordance with Section 26 05 26.

M. Remove shipping braces and adjust bolts that attach the core and coil mounting bracket to the enclosure according to manufacturer's recommendations in order to reduce audible noise transmission.

N. Where not factory-installed, install lugs sized as required for termination of conductors as

shown on the drawings.

O. Identify transformers in accordance with Section 26 05 53.

P. Install transformer identification nameplate in accordance with Section 26 05 53.

3.03 FIELD QUALITY CONTROL

A. Perform field inspection, testing, and adjusting in accordance with Section 01 40 00.

B. Inspect and test in accordance with NETA STD ATS, except Section 4.

3.04 ADJUSTING

A. Measure primary and secondary voltages and make appropriate tap adjustments.

B. Adjust tightness of mechanical and electrical connections to manufacturer's recommended torque settings.

3.05 CLEANING

A. Clean dirt and debris from transformer components according to manufacturer's instructions.

B. Repair scratched or marred exterior surfaces to match original factory finish.

END OF SECTION

SECTION 26 24 13

SWITCHBOARDS

PART 1 GENERAL

1.01 SECTION INCLUDES

A. Switchboards.

B. Switchboard accessories.

1.02 RELATED REQUIREMENTS

A. Section 03 30 00 - Cast-in-Place Concrete: Concrete for supporting foundations and pads.

B. Section 26 05 26 - Grounding and Bonding for Electrical Systems.

C. Section 26 05 53 - Identification for Electrical Systems: Identification products and requirements.

D. Section 26 27 01 - Electrical Service Entrance.

E. Section 26 28 13 - Fuses.

F. Section 26 43 00 - Surge Protective Devices.

1.03 REFERENCE STANDARDS

A. ANSI C12.1 - American National Standard Code for Electricity Metering.

B. ANSI C39.1 - American National Standard Requirements for Electrical Analog Indicating Instruments.

C. IEC 60051-1 - Direct Acting Indicating Analogue Electrical Measuring Instruments and Their Accessories - Part 1: Definitions and General Requirements Common To All Parts;.

D. IEC 60051-2 - Direct Acting Indicating Analogue Electrical Measuring Instruments and Their Accessories - Part 2: Special Requirements for Ammeters and Voltmeters.

E. IEEE C12.1 - American National Standard Code for Electricity Metering; Institute of Electrical and Electronic Engineers.

F. IEEE C57.13 - IEEE Standard Requirements for Instrument Transformers; Institute of Electrical and Electronic Engineers.

G. NECA 400 - Standard for Installing and Maintaining Switchboards (ANSI); National Electrical Contractors Association.

H. NEMA KS 1 - Enclosed and Miscellaneous Distribution Equipment Switches (600 Volts Maximum); National Electrical Manufacturers Association.

I. NEMA PB 2 - Deadfront Distribution Switchboards; National Electrical Manufacturers Association.

J. NEMA PB 2.1 - General Instructions for Proper Handling, Installation, Operation, and Maintenance of Deadfront Distribution Switchboards Rated 600 Volts or Less; National Electrical Manufacturers Association.

K. NETA STD ATS - Acceptance Testing Specifications for Electrical Power Distribution Equipment and Systems; International Electrical Testing Association.

L. NFPA 70 - National Electrical Code; National Fire Protection Association.

1.04 SUBMITTALS

A. See Section 01 30 00 - Administrative Requirements, for submittal procedures.

B. Product Data: Provide electrical characteristics including voltage, frame size and trip ratings, fault current withstand ratings, and time-current curves of all equipment and components.

C. Shop Drawings: Indicate front and side views of enclosures with overall dimensions shown; conduit entrance locations and requirements; nameplate legends; size and number of bus bars per phase, neutral, and ground; and switchboard instrument details.

D. Test Reports: Indicate results of factory production tests.

E. Manufacturer's Instructions: Indicate application conditions and limitations of use stipulated by product testing agency. Include instructions for storage, handling, protection, examination, preparation, and installation of product.

F. Project Record Documents: Record actual locations of switchboards.

G. Maintenance Data: Include spare parts listing; source and current prices of replacement parts and supplies; and recommended maintenance procedures and intervals.

H. Maintenance Materials: Furnish the following for Red Clay Consolidated School District's use in maintenance of project.
   1. See Section 01 60 00 - Product Requirements, for additional provisions.
   2. Enclosure Keys: Two of each different key.

1.05 QUALITY ASSURANCE

A. Conform to requirements of NFPA 70.

B. Manufacturer Qualifications: Company specializing in manufacturing the products specified in this section with minimum three years documented experience.

C. Products: Listed and classified by Underwriters Laboratories Inc. as suitable for the purpose specified and indicated.

1.06 DELIVERY, STORAGE, AND HANDLING

A. Deliver in 48 inch maximum width shipping splits, individually wrapped for protection and mounted on shipping skids.

B. Store in a clean, dry space. Maintain factory wrapping or provide an additional heavy canvas or heavy plastic cover to protect units from dirt, water, construction debris, and traffic.

C. Handle in accordance with NEMA PB 2.1 and manufacturer's written instructions. Lift only with lugs provided for the purpose. Handle carefully to avoid damage to switchboard internal components, enclosure, and finish.

PART 2 PRODUCTS

2.01 MANUFACTURERS

A. Siemens Industry, Inc: www.sea.siemens.com.

B. Eaton Corporation; Cutler-Hammer Products: www.eaton.com.

C. Schneider Electric; Square D Products: www.schneider-electric.us.

D. Substitutions: See Section 01 60 00 - Product Requirements.

2.02 ↔SWITCHBOARDS

A. Description: NEMA PB 2 switchboard with electrical ratings and configurations as indicated and specified.

B. Ratings:
   1. Voltage: 120/208; 277/480 volts.
   2. Configuration: Three phase, four wire, grounded.
   3. Main Bus: 2000 amps.277/480 v, 2000 amps, 208/120v .
   4. Integrated Equipment Rating: 100000 rms amperes symmetrical.

C. Main Section Devices: Individually mounted and compartmented.

D. Distribution Section Devices: _Group mounted- double row sections.

E. Bus Material: Copper with tin plating, standard size.

F. Bus Connections: Bolted, accessible from front for maintenance.

G. Fully insulate load side bus bars

H. Ground Bus: Extend length of switchboard.

I. Insulated Ground Bus: Extend length of switchboard.

J. Molded Case Circuit Breakers: Integral thermal and instantaneous magnetic trip in each pole.
   1. Provide circuit breakers UL listed as Type HACR for air conditioning equipment branch circuits.
   2. Include shunt trip where indicated.

K. Solid-State Molded Case Circuit Breakers: With electronic sensing, timing and tripping circuits for adjustable current settings; UL listed.
   1. Ground fault trip, ground fault sensing integral with circuit breaker.
   2. Instantaneous trip.
   3. Adjustable short time/ long time trip.
   4. Stationary mounting.
   5. Include shunt trip where indicated.

L. Line and Load Terminations: Accessible from the front only of the switchboard, suitable for the conductor materials and sizes indicated.

M. Ground Fault Sensor: Zero sequence type.

N. Ground Fault Relay: Adjustable ground fault sensitivity from 200 to 1200 amperes, time delay seconds. Provide monitor panel with lamp to indicate relay operation, TEST and RESET control switches.

O. Future Provisions: Fully equip spaces for future devices with bussing and bus connections, suitably insulated and braced for short circuit currents. Provide continuous current rating as indicated.

P. Enclosure: Type _NEMA 1-Indoors.
   1. Align sections at front and rear.
   2. Switchboard Height: 91.5 inches, excluding floor sills, lifting members and pull boxes.
   3. Finish: Manufacturer's standard light gray enamel over external surfaces. Coat internal surfaces with minimum one coat corrosion-resisting paint, or plate with cadmium or zinc.
   4. Structure: Free standing, self supporting, totally front accessible.

2.03 SURGE PROTECTIVE DEVICES

A. See Section 26 43 00 for factory-installed, internally mounted surge protective devices. List and label switchboards containing surge protective devices as a complete assembly including surge protective device.

2.04 POWER METERS

A. Manufacturers:
   1. Square D - Powerlogic Series 800 power meters or equal.
   2. Substitutions: See Section 01 60 00 - Product Requirements.

B. Watt-Hour Meters and Wattmeters: ANSI C12.1, three phase induction type with two stators, each with current and potential coil, rated 5 amperes and 120 volts at 60 Hertz.
   1. Meter suitable for connection to 3- and 4-wire circuits.
   2. Potential indicating lamps.
   3. Adjustments for light and full load, phase balance, and power factor.
   4. Digital register.
   5. Integral demand indicator.
   6. Ratchets to prevent reverse rotation.
   7. Removable meter with draw-out test plug.
   8. Semi-flush mounted case with matching cover.

C. Provide meters with appropriate multiplier tags.

2.05 METERING TRANSFORMERS

A. Manufacturers:
   1. Square D or equal.
   2. Substitutions: See Section 01 60 00 - Product Requirements.

B. Current Transformers: IEEE C57.13, 5 ampere secondary, wound; bushing; bar or window type, with single secondary winding and secondary shorting device, primary/secondary ratio as required, burden and accuracy consistent with connected metering and relay devices, 60 Hertz.

C. Potential Transformers: IEEE C57.13, 120 volt single secondary, disconnecting type with integral fuse mountings, primary/secondary ratio as required, burden and accuracy consistent with connected metering and relay devices, 60 Hertz.

2.06 SOURCE QUALITY CONTROL

A. Shop inspect and test switchboard according to NEMA PB 2.

B. Make completed switchboard available for inspection at manufacturer's factory prior to packaging for shipment. Notify Red Clay Consolidated School District at least 7 days before inspection is allowed.

PART 3 EXECUTION

3.01 PREPARATION

A. Provide concrete housekeeping pad under the provisions of Section 03 30 00.

B. Verify that field measurements are as instructed by manufacturer.

3.02 INSTALLATION

A. Install switchboard in locations shown on drawings, according to NEMA PB 2.1.

B. Install in a neat and workmanlike manner, as specified in NECA 400.

C. Tighten accessible bus connections and mechanical fasteners after placing switchboard.

D. Identify switchboards in accordance with Section 26 05 53.

3.03 FIELD QUALITY CONTROL

A. Perform field inspection and testing in accordance with Section 01 40 00.

B. Inspect and test in accordance with NETA STD ATS, except Section 4.

C. Perform inspections and tests listed in NETA STD ATS, Section 7.1.

3.04 ADJUSTING

A. Adjust all operating mechanisms for free mechanical movement.

B. Tighten bolted bus connections in accordance with manufacturer's instructions.

C. Adjust circuit breaker trip and time delay settings to values indicated.

D. Adjust circuit breaker trip and time delay settings to values as instructed by Architect.

3.05 CLEANING

A. Touch up scratched or marred surfaces to match original finish.

END OF SECTION

SECTION 26 24 16

PANELBOARDS

PART 1 GENERAL

1.01 SECTION INCLUDES

A. Power distribution panelboards.

B. Lighting and appliance panelboards.

C. Overcurrent protective devices for panelboards.

1.02 RELATED REQUIREMENTS

A. Section 03 30 00 - Cast-in-Place Concrete: Concrete equipment pads.

B. Section 26 05 26 - Grounding and Bonding for Electrical Systems.

C. Section 26 05 29 - Hangers and Supports for Electrical Systems.

D. Section 26 05 53 - Identification for Electrical Systems: Identification products and requirements.

E. Section 26 28 13 - Fuses: Fuses for fusible switches and spare fuse cabinets.

1.03 REFERENCE STANDARDS

A. FS W-C-375 - Circuit Breakers, Molded Case; Branch Circuit and Service; Federal Specification.

B. NECA 1 - Standard for Good Workmanship in Electrical Construction; National Electrical Contractors Association.

C. NECA 407 - Standard for Installing and Maintaining Panelboards; National Electrical Contractors Association.

D. NEMA 250 - Enclosures for Electrical Equipment (1000 Volts Maximum).

E. NEMA ICS 2 - Industrial Control and Systems: Controllers, Contactors, and Overload Relays, Rated Not More Than 2000 Volts AC or 750 Volts DC; National Electrical Manufacturers Association.

F. NEMA KS 1 - Enclosed and Miscellaneous Distribution Equipment Switches (600 Volts Maximum); National Electrical Manufacturers Association.

G. NEMA PB 1 - Panelboards; National Electrical Manufacturers Association.

H. NEMA PB 1.1 - General Instructions for Proper Installation, Operation and Maintenance of Panelboards Rated 600 Volts or Less; National Electrical Manufacturers Association.

I. NETA STD ATS - Acceptance Testing Specifications for Electrical Power Distribution Equipment and Systems; International Electrical Testing Association.

J. NFPA 70 - National Electrical Code; National Fire Protection Association.

K. UL 50 - Enclosures for Electrical Equipment, Non-Environmental Considerations.

L. UL 50E - Enclosures for Electrical Equipment, Environmental Considerations.

M. UL 67 - Panelboards.

N. UL 489 - Molded-Case Circuit Breakers, Molded-Case Switches and Circuit Breaker Enclosures.

O. UL 869A - Reference Standard for Service Equipment.

P. UL 943 - Ground-Fault Circuit-Interrupters.

1.04 ADMINISTRATIVE REQUIREMENTS

A. Coordination:
   1. Coordinate the work with other trades to avoid placement of ductwork, piping, equipment, or other potential obstructions within the dedicated equipment spaces and working clearances for electrical equipment required by NFPA 70.
   2. Coordinate arrangement of electrical equipment with the dimensions and clearance requirements of the actual equipment to be installed.
   3. Coordinate the work with other trades to provide walls suitable for installation of flush-mounted panelboards where indicated.
   4. Verify with manufacturer that conductor terminations are suitable for use with the conductors to be installed.
   5. Notify Architect of any conflicts with or deviations from the contract documents. Obtain direction before proceeding with work.

1.05 SUBMITTALS

A. See Section 01 30 00 - Administrative Requirements, for submittal procedures.

B. Product Data: Provide manufacturer's standard catalog pages and data sheets for panelboards, enclosures, overcurrent protective devices, and other installed components and accessories.
   1. Include characteristic trip curves for each type and rating of overcurrent protective device upon request.

C. Shop Drawings: Indicate outline and support point dimensions, voltage, main bus ampacity, overcurrent protective device arrangement and sizes, short circuit current ratings, conduit entry locations, conductor terminal information, and installed features and accessories.
   1. Clearly indicate whether proposed short circuit current ratings are fully rated or, where acceptable, series rated systems.

D. Manufacturer's Installation Instructions: Indicate application conditions and limitations of use stipulated by product testing agency. Include instructions for storage, handling, protection, examination, preparation, and installation of product.

E. Project Record Documents: Record actual installed locations of panelboards and actual installed circuiting arrangements.

F. Maintenance Data: Include information on replacement parts and recommended maintenance procedures and intervals.

1.06 QUALITY ASSURANCE

A. Conform to requirements of NFPA 70.

B. Maintain at the project site a copy of each referenced document that prescribes execution requirements.

C. Manufacturer Qualifications: Company specializing in manufacturing the products specified in this section with minimum three years documented experience.

1.07 DELIVERY, STORAGE, AND HANDLING

A. Receive, inspect, handle, and store panelboards in accordance with manufacturer's instructions and NECA 407.

B. Store in a clean, dry space. Maintain factory wrapping or provide an additional heavy canvas or heavy plastic cover to protect units from dirt, water, construction debris, and traffic.

C. Handle carefully in accordance with manufacturer's written instructions to avoid damage to panelboard internal components, enclosure, and finish.

1.08 FIELD CONDITIONS

A. Maintain ambient temperature within the following limits during and after installation of panelboards:
   1. Panelboards Containing Circuit Breakers: Between 23 degrees F and 104 degrees F.

1.09 MAINTENANCE MATERIALS

A. See Section 01 60 00 - Product Requirements, for additional provisions.

B. Furnish two of each panelboard key.

PART 2 PRODUCTS

2.01 MANUFACTURERS

A. Eaton Corporation; Cutler-Hammer Products: www.eaton.com.

B. General Electric Company: www.geindustrial.com.

C. Schneider Electric; Square D Products: www.schneider-electric.us.

D. Substitutions: See Section 01 60 00 - Product Requirements.

2.02 ALL PANELBOARDS

A. Provide products listed and labeled by Underwriters Laboratories Inc. as suitable for the purpose indicated.

B. Unless otherwise indicated, provide products suitable for continuous operation under the following service conditions:
   1. Altitude: Less than 6,600 feet.
   2. Ambient Temperature:
      a. Panelboards Containing Circuit Breakers: Between 23 degrees F and 104 degrees F.

C. Short Circuit Current Rating:
   1. Provide panelboards with listed short circuit current rating not less than the available fault current at the installed location as indicated on the drawings.
   2. Listed series ratings are acceptable, except where not permitted by motor contribution according to NFPA 70.
   3. Label equipment utilizing series ratings as required by NFPA 70.

D. Panelboards Used for Service Entrance: Listed and labeled as suitable for use as service equipment according to UL 869A.

E. Mains: Configure for top or bottom incoming feed as indicated or as required for the installation.

F. Branch Overcurrent Protective Devices: Replaceable without disturbing adjacent devices.

G. Bussing: Sized in accordance with UL 67 temperature rise requirements.

1. Provide fully rated neutral bus unless otherwise indicated, with a suitable lug for each feeder or branch circuit requiring a neutral connection.
2. Provide solidly bonded equipment ground bus in each panelboard, with a suitable lug for each feeder and branch circuit equipment grounding conductor.
3. Provide separate isolated/insulated ground bus where indicated or where isolated grounding conductors are provided.

H. Conductor Terminations: Suitable for use with the conductors to be installed.

I. Enclosures: Comply with NEMA 250, and list and label as complying with UL 50 and UL 50E.
1. Environment Type per NEMA 250: Unless otherwise indicated, as specified for the following installation locations:
   a. Indoor Clean, Dry Locations: Type 1.
2. Boxes: Galvanized steel unless otherwise indicated.
   a. Provide wiring gutters sized to accommodate the conductors to be installed.
3. Fronts:
   a. Fronts for Surface-Mounted Enclosures: Same dimensions as boxes.
   b. Fronts for Flush-Mounted Enclosures: Overlap boxes on all sides to conceal rough opening.
   c. Finish for Painted Steel Fronts: Manufacturer's standard grey unless otherwise indicated.
4. Lockable Doors: All locks keyed alike unless otherwise indicated.
5. Metal frame for type written directory
6.

J. Future Provisions: Prepare all unused spaces for future installation of devices including bussing, connectors, mounting hardware and all other required provisions.

2.03 POWER DISTRIBUTION PANELBOARDS

A. Description: Panelboards complying with NEMA PB 1, power and feeder distribution type, circuit breaker type, and listed and labeled as complying with UL 67; ratings, configurations and features as indicated on the drawings.

B. Conductor Terminations:
1. Main and Neutral Lug Material: Copper, suitable for terminating copper conductors only.
2. Main and Neutral Lug Type: Mechanical.

C. Bussing:
1. Phase and Neutral Bus Material: Copper.
2. Ground Bus Material: Copper.

D. Circuit Breakers:
1. Provide bolt-on type or plug-in type secured with locking mechanical restraints.

E. Enclosures:
1. Provide surface-mounted enclosures unless otherwise indicated.
2. Fronts: Provide door-in-door trim with hinged cover for access to load terminals and wiring gutters, and separate lockable hinged door with concealed hinges for access to overcurrent protective device handles without exposing live parts.
3. Provide metal circuit directory holder mounted on inside of door.

F. Manufacturers:
1. SQ.D or Equal.
2. Substitutions: See Section 01 60 00 - Product Requirements.

G. Description: NEMA PB 1, circuit breaker type.

H. Service Conditions:
   1. Altitude: 1000 feet.
   2. Temperature: 55 degrees F.

I. Panelboard Bus: Copper, ratings as indicated. Provide copper ground bus in each panelboard.

J. Minimum integrated short circuit rating: As indicated.
   1. 240 Volt Panelboards: 14,000 amperes rms symmetrical.
   2. 480 Volt Panelboards: 21,000 amperes rms symmetrical.

K. Molded Case Circuit Breakers: With integral thermal and instantaneous magnetic trip in each pole; UL listed. For air conditioning equipment branch circuits provide circuit breakers UL listed as Type HACR.

L. Molded Case Circuit Breakers with Current Limiters: With replaceable current limiting elements, in addition to integral thermal and instantaneous magnetic trip in each pole; UL listed.

M. Circuit Breaker Accessories: Trip units and auxiliary switches as indicated.

N. Enclosure: NEMA PB 1, Type 1, 5 34" deep, 20" wide, cabinet box. With continued hinge and lock.

O. Cabinet Front: Surface type, fastened with, hinged door with flush lock, finished in manufacturer's standard gray enamel.

2.04 LIGHTING AND APPLIANCE PANELBOARDS

A. Description: Panelboards complying with NEMA PB 1, lighting and appliance branch circuit type, circuit breaker type, and listed and labeled as complying with UL 67; ratings, configurations and features as indicated on the drawings.

B. Products:
   1. SQD.
   2. Eaton Cutler Hammer.
   3. Substitutions: See Section 01 60 00 - Product Requirements.

C. Conductor Terminations:
   1. Main and Neutral Lug Material: Copper, suitable for terminating copper conductors only.
   2. Main and Neutral Lug Type: Mechanical.

D. Bussing:
   1. Phase Bus Connections: Arranged for sequential phasing of overcurrent protective devices.
   2. Phase and Neutral Bus Material: Copper.
   3. Ground Bus Material: Copper.

E. Circuit Breakers: Thermal magnetic bolt-on type unless otherwise indicated.

F. Enclosures:
   1. Provide surface-mounted or flush-mounted enclosures as indicated.
   2. Fronts: Provide door-in-door trim with hinged cover for access to load terminals and wiring gutters, and separate lockable hinged door with concealed hinges for access to overcurrent protective device handles without exposing live parts.
   3. Provide metal circuit directory holder mounted on inside of door.

G. Manufacturers:
   1. SQ.D or Equal.

2. Substitutions: See Section 01 60 00 - Product Requirements.

H. Description: NEMA PB1, circuit breaker type, lighting and appliance branch circuit panelboard.

I. Panelboard Bus: Copper, ratings as indicated. Provide copper ground bus in each panelboard; provide insulated ground bus where scheduled.

J. Minimum Integrated Short Circuit Rating: As indicated.
1. 240 Volt Panelboards: 14,000 amperes rms symmetrical.
2. 480 Volt Panelboards: 21,000 amperes rms symmetrical.

K. Molded Case Circuit Breakers: Thermal magnetic trip circuit breakers, bolt-on type, with common trip handle for all poles; UL listed.
1. Type SWD for lighting circuits.
2. Type HACR for air conditioning equipment circuits.
3. Class A ground fault interrupter circuit breakers where scheduled.
4. Do not use tandem circuit breakers, or miniature circuit breakers.

L. Enclosure: NEMA PB 1, Type 1.

M. Cabinet Box: 6 inches deep, 20 inches wide for 240 volt and less panelboards, 20 inches wide for 480 volt panelboards.

N. Cabinet Front: Flush or Surface cabinet front with concealed trim clamps, concealed hinge, metal directory frame, and flush lock all keyed alike. Finish in manufacturer's standard gray enamel.

2.05 OVERCURRENT PROTECTIVE DEVICES

A. Molded Case Circuit Breakers:
1. Description: Quick-make, quick-break, over center toggle, trip-free, trip-indicating circuit breakers listed and labeled as complying with UL 489, and complying with FS W-C-375 where applicable; ratings, configurations, and features as indicated on the drawings.
2. Interrupting Capacity:
   a. Provide circuit breakers with interrupting capacity as required to provide the short circuit current rating indicated, but not less than:
      1) 14000 rms symmetrical amperes at 240 VAC or 208 VAC.
      2) 21000 rms symmetrical amperes at 480 VAC.
   b. Fully Rated Systems: Provide circuit breakers with interrupting capacity not less than the short circuit current rating indicated.
   c. Series Rated Systems: Provide circuit breakers listed in combination with upstream devices to provide interrupting rating not less than the short circuit current rating indicated.
3. Conductor Terminations:
   a. Provide mechanical lugs unless otherwise indicated.
   b. Lug Material: Copper, suitable for terminating copper conductors only.
4. Thermal Magnetic Circuit Breakers: For each pole, furnish thermal inverse time tripping element for overload protection and magnetic instantaneous tripping element for short circuit protection.
   a. Provide interchangeable trip units where indicated.
5. Electronic Trip Circuit Breakers: Furnish solid state, microprocessor-based, true rms sensing trip units.
   a. Provide the following field-adjustable trip response settings:
      1) Long time pickup, adjustable by replacing interchangeable trip unit or by setting dial.

2) Long time delay.
3) Short time pickup and delay.
4) Instantaneous pickup.
5) Ground fault pickup and delay where ground fault protection is indicated.

6. Multi-Pole Circuit Breakers: Furnish with common trip for all poles.
7. Provide the following circuit breaker types where indicated:
   a. Ground Fault Circuit Interrupter (GFCI) Circuit Breakers: Listed as complying with UL 943, class A for protection of personnel.
8. Provide listed switching duty rated circuit breakers with SWD marking for all branch circuits serving fluorescent lighting.
9. Provide listed high intensity discharge lighting rated circuit breakers with HID marking for all branch circuits serving HID lighting.
10. Do not use tandem circuit breakers.
11. Do not use handle ties in lieu of multi-pole circuit breakers.

2.06 SOURCE QUALITY CONTROL

A. Factory test panelboards according to NEMA PB 1.

PART 3 EXECUTION

3.01 EXAMINATION

A. Verify that field measurements are as shown on the drawings.

B. Verify that the ratings and configurations of the panelboards and associated components are consistent with the indicated requirements.

C. Verify that mounting surfaces are ready to receive panelboards.

D. Verify that conditions are satisfactory for installation prior to starting work.

3.02 INSTALLATION

A. Install products in accordance with manufacturer's instructions.

B. Install panelboards securely, in a neat and workmanlike manner in accordance with NECA 1 (general workmanship), NECA 407 (panelboards), and NEMA PB 1.1.

C. Arrange equipment to provide minimum clearances in accordance with manufacturer's instructions and NFPA 70.

D. Provide required supports in accordance with Section 26 05 29.

E. Install panelboards plumb.

F. Install flush-mounted panelboards so that trims fit completely flush to wall with no gaps and rough opening completely covered.

G. Mount panelboards such that the highest position of any operating handle for circuit breakers or switches does not exceed 79 inches above the floor or working platform.

H. Mount floor-mounted power distribution panelboards on properly sized 3 inch high concrete pad constructed in accordance with Section 03 30 00.

I. Provide minimum of six spare 1 inch trade size conduits out of each flush-mounted panelboard stubbed into accessible space above ceiling and below floor.

J. Provide grounding and bonding in accordance with Section 26 05 26.

1. Terminate branch circuit equipment grounding conductors on solidly bonded equipment ground bus only. Do not terminate on isolated/insulated ground bus.
2. Terminate branch circuit isolated grounding conductors on isolated/insulated ground bus only. Do not terminate on solidly bonded equipment ground bus.

K. Install all field-installed branch devices, components, and accessories.

L. Install panelboards in accordance with NEMA PB 1.1 and NECA 1.

M. Install panelboards plumb. Install recessed panelboards flush with wall finishes, where installed surface mounted secure or anchor panelboard to brick or cinder block wall.

N. Height: 6 feet to top of panelboard; install panelboards taller than 6 feet with bottom no more than 4 inches above floor.

O. Provide filler plates to cover unused spaces in panelboards.

P. Provide circuit breaker lock-on devices to prevent unauthorized personnel from de-energizing essential loads where indicated. Also provide for the following:
1. Emergency and night lighting circuits.
2. Fire detection and alarm circuits.
3. Communications equipment circuits.
4. Intrusion detection and access control system circuits.
5. Video surveillance system circuits.

Q. Identify panelboards in accordance with Section 26 05 53.

R. Provide computer-generated circuit directory for each lighting and appliance panelboard, and each power distribution panelboard provided with a door, clearly and specifically indicating the loads served. Identify spares and spaces.

S. Provide typed or neatly handwritten circuit directory for each branch circuit panelboard. Revise directory to reflect circuiting changes required to balance phase loads.

T. Provide identification nameplate for each panelboard in accordance with Section 26 05 53.

U. Provide arc flash warning labels in accordance with NFPA 70.

V. Provide spare conduits out of each recessed panelboard to an accessible location above ceiling. Identify each as SPARE.
1. Minimum spare conduits: 5 empty 1 inch.

W. Ground and bond panelboard enclosure according to Section 26 05 26.

3.03 FIELD QUALITY CONTROL

A. Perform inspection, testing, and adjusting in accordance with Section 01 40 00.

B. Perform field inspection and testing in accordance with Section 01 40 00.

C. Inspect and test in accordance with NETA STD ATS, except Section 4.

D. Molded Case Circuit Breakers: Perform inspections and tests listed in NETA STD ATS, Section 7.6.1.1 for all main circuit breakers and circuit breakers larger than 400 amperes. Tests listed as optional are not required.

E. Test GFCI circuit breakers to verify proper operation.

F. Correct deficiencies and replace damaged or defective panelboards or associated components.

G. Perform inspections and tests listed in NETA STD ATS, Section 7.5 for switches, Section 7.6 for circuit breakers.

3.04 ADJUSTING

A. Adjust tightness of mechanical and electrical connections to manufacturer's recommended torque settings.

B. Adjust alignment of panelboard fronts.

C. Load Balancing: For each panelboard, rearrange circuits such that the difference between each measured steady state phase load does not exceed 20 percent and adjust circuit directories accordingly. Maintain proper phasing for multi-wire branch circuits.

3.05 CLEANING

A. Clean dirt and debris from panelboard enclosures and components according to manufacturer's instructions.

B. Repair scratched or marred exterior surfaces to match original factory finish.

END OF SECTION

SECTION 26 27 01

ELECTRICAL SERVICE ENTRANCE

PART 1 GENERAL

1.01 SECTION INCLUDES

A. Service racks.

B. Metering transformer cabinets.

C. Meter bases.

1.02 RELATED REQUIREMENTS

A. Section 26 24 13 - Switchboards: Metering transformer compartment.

1.03 REFERENCE STANDARDS

A. NECA 1 - Standard for Good Workmanship in Electrical Construction; National Electrical Contractors Association.

B. NFPA 70 - National Electrical Code; National Fire Protection Association.

1.04 SYSTEM DESCRIPTION

A. System Characteristics: 480Y/277 volts, three phase, four-wire, 60 Hertz.

1.05 ADMINISTRATIVE REQUIREMENTS

A. Preinstallation Meeting: Convene one week prior to commencing work of this section. Review service entrance requirements and details with Utility Company representative.

1.06 SUBMITTALS

A. See Section 01 30 00 - Administrative Requirements, for submittal procedures.

B. Product Data: Provide ratings and dimensions of transformer cabinets and meter bases.

C. Submit utility company-prepared drawings.

1.07 QUALITY ASSURANCE

A. Utility Company: City of Seaford dept of Electric

B. Perform work in accordance with utility company written requirements and NFPA 70.
   1. Maintain one copy of each document on site.

C. Products: Listed and classified by Underwriters Laboratories Inc. as suitable for the purpose specified and indicated.

1.08 PRE-INSTALLATION MEETING

A. Convene one week prior to commencing work of this section. Review service entrance requirements and details with Utility Company representative.

PART 2 PRODUCTS

2.01 MANUFACTURERS

A. GE Industrial: www.geindustrial.com.

B. Milbank Manufacturing: www.milbankmfg.com.

C. Square D: www.squared.com.

D. Substitutions: See Section 01 60 00 - Product Requirements.

2.02 COMPONENTS

A. Metering Transformer Cabinets: Sheet metal cabinet with hinged door, conforming to utility company requirements, with provisions for locking and sealing.
   1. Size: As required by utility.

B. Meter Base: Furnished by utility company.

C. Utility Transformer Pad: sized as indicated on drawings or size as required by Delmarva Power.

D. Other Components: As required by utility company.

PART 3 EXECUTION

3.01 PREPARATION

A. Arrange with utility company to obtain permanent electric service to the Project.

B. Verify that field measurements are as indicated on utility company drawings.

3.02 INSTALLATION

A. Install service rack, transformer pad, metering transformer cabinets, and meter base as required by utility company.

B. Install securely, in a neat and workmanlike manner, as specified in NECA 1.

END OF SECTION

SECTION 26 27 17

EQUIPMENT WIRING

PART 1 GENERAL

1.01 SECTION INCLUDES

A. Electrical connections to equipment.

1.02 RELATED REQUIREMENTS

A. Section 26 05 34 - Conduit.

B. Section 26 05 19 - Low-Voltage Electrical Power Conductors and Cables (600 V and Less).

C. Section 26 05 37 - Boxes.

D. Section 26 27 26 - Wiring Devices.

1.03 REFERENCE STANDARDS

A. NEMA WD 1 - General Color Requirements for Wiring Devices; National Electrical Manufacturers Association.

B. NEMA WD 6 - Wiring Devices - Dimensional Requirements; National Electrical Manufacturers Association.

C. NFPA 70 - National Electrical Code; National Fire Protection Association.

1.04 SUBMITTALS

A. See Section 01 30 00 - Administrative Requirements, for submittal procedures.

B. Product Data: Provide wiring device manufacturer’s catalog information showing dimensions, configurations, and construction.

C. Manufacturer's Instructions: Indicate application conditions and limitations of use stipulated by product testing agency. Include instructions for storage, handling, protection, examination, preparation, and installation of product.

1.05 QUALITY ASSURANCE

A. Conform to requirements of NFPA 70.

B. Products: Listed and classified by Underwriters Laboratories Inc. as suitable for the purpose specified and indicated.

1.06 COORDINATION

A. Obtain and review shop drawings, product data, manufacturer's wiring diagrams, and manufacturer's instructions for equipment furnished under other sections.

B. Determine connection locations and requirements.

C. Sequence rough-in of electrical connections to coordinate with installation of equipment.

D. Sequence electrical connections to coordinate with start-up of equipment.

PART 2 PRODUCTS

2.01 MATERIALS

A. Cords and Caps: NEMA WD 6; match receptacle configuration at outlet provided for equipment.
   1. Colors: Conform to NEMA WD 1.
   2. Cord Construction: NFPA 70, Type SO, multiconductor flexible cord with identified equipment grounding conductor, suitable for use in damp locations.
   3. Size: Suitable for connected load of equipment, length of cord, and rating of branch circuit overcurrent protection.
   4. Product:
   5. Substitutions: See Section 01 60 00 - Product Requirements.

B. Disconnect Switches: As specified in Section and in individual equipment sections.

C. Wiring Devices: As specified in Section 26 27 26.

D. Flexible Conduit: As specified in Section 26 05 34.

E. Wire and Cable: As specified in Section 26 05 19.

F. Boxes: As specified in Section 26 05 37.

2.02 EQUIPMENT CONNECTIONS

PART 3 EXECUTION

3.01 EXAMINATION

A. Verify that equipment is ready for electrical connection, wiring, and energization.

3.02 ELECTRICAL CONNECTIONS

A. Make electrical connections in accordance with equipment manufacturer's instructions.

B. Make conduit connections to equipment using flexible conduit. Use liquidtight flexible conduit with watertight connectors in damp or wet locations.

C. Connect heat producing equipment using wire and cable with insulation suitable for temperatures encountered.

D. Provide receptacle outlet to accommodate connection with attachment plug.

E. Provide cord and cap where field-supplied attachment plug is required.

F. Install suitable strain-relief clamps and fittings for cord connections at outlet boxes and equipment connection boxes.

G. Install disconnect switches, controllers, control stations, and control devices to complete equipment wiring requirements.

H. Install terminal block jumpers to complete equipment wiring requirements.

I. Install interconnecting conduit and wiring between devices and equipment to complete equipment wiring requirements.

J. Coolers and Freezers: Cut and seal conduit openings in freezer and cooler walls, floor, and ceilings.

END OF SECTION

SECTION 26 27 26

WIRING DEVICES

PART 1 GENERAL

1.01 SECTION INCLUDES

A. Wall switches.

B. Wall dimmers.

C. Receptacles.

D. Wall plates.

E. Floor box service fittings.

1.02 RELATED REQUIREMENTS

A. Section 26 05 26 - Grounding and Bonding for Electrical Systems.

B. Section 26 05 35 - Surface Raceways: Surface raceway systems, including multioutlet assemblies.

C. Section 26 05 37 - Boxes.

D. Section 26 05 53 - Identification for Electrical Systems: Identification products and requirements.

E. Section 26 09 23 - Lighting Control Devices: Devices for automatic control of lighting, including occupancy sensors, in-wall time switches, and in-wall interval timers.

F. Section 26 27 17 - Equipment Wiring: Cords and plugs for equipment.

1.03 REFERENCE STANDARDS

A. FS W-C-596 - Connector, Electrical, Power, General Specification for; Federal Specification.

B. FS W-S-896 - Switches, Toggle (Toggle and Lock), Flush-mounted (General Specification); Federal Specification.

C. NECA 1 - Standard for Good Workmanship in Electrical Construction; National Electrical Contractors Association.

D. NEMA WD 1 - General Color Requirements for Wiring Devices; National Electrical Manufacturers Association.

E. NEMA WD 6 - Wiring Device -- Dimensional Requirements; National Electrical Manufacturers Association.

F. NFPA 70 - National Electrical Code; National Fire Protection Association.

G. UL 20 - General-Use Snap Switches.

H. UL 498 - Attachment Plugs and Receptacles.

I. UL 514D - Cover Plates for Flush-Mounted Wiring Devices.

J. UL 943 - Ground-Fault Circuit-Interrupters.

K. UL 1472 - Solid-State Dimming Controls.

1.04 ADMINISTRATIVE REQUIREMENTS

A. Coordination:
   1. Coordinate the placement of outlet boxes with millwork, furniture, equipment, etc. installed under other sections or by others.
   2. Coordinate wiring device ratings and configurations with the electrical requirements of actual equipment to be installed.
   3. Coordinate the installation and preparation of uneven surfaces, such as split face block, to provide suitable surface for installation of wiring devices.
   4. Notify Architect of any conflicts or deviations from the contract documents to obtain direction prior to proceeding with work.

1.05 SUBMITTALS

A. See Section 01 30 00 - Administrative Requirements, for submittal procedures.

B. Product Data: Provide manufacturer's catalog information showing dimensions, colors, and configurations.

C. Manufacturer's Installation Instructions: Indicate application conditions and limitations of use stipulated by product testing agency. Include instructions for storage, handling, protection, examination, preparation, and installation of product.

1.06 QUALITY ASSURANCE

A. Conform to requirements of NFPA 70.

B. Maintain at the project site a copy of each referenced document that prescribes execution requirements.

C. Manufacturer Qualifications: Company specializing in manufacturing the products specified in this section with minimum three years documented experience.

1.07 DELIVERY, STORAGE, AND PROTECTION

A. Store in a clean, dry space in original manufacturer's packaging until ready for installation.

1.08 EXTRA MATERIALS

A. See Section 01 60 00 - Product Requirements, for additional provisions.

B. Furnish two of each style, size, and finish wall plate.

PART 2 PRODUCTS

2.01 MANUFACTURERS

A. Hubbell Incorporated; : www.hubbell-wiring.com.

B. Leviton Manufacturing Company, Inc; : www.leviton.com.

C. Lutron Electronics Company, Inc: www.lutron.com.

D. Pass & Seymour, a brand of Legrand North America, Inc; : www.legrand.us

E. Cooper Wiring Devices: www.cooperwiringdevices.com.

F. Leviton Manufacturing, Inc: www.leviton.com.

G. Substitutions: See Section 01 60 00 - Product Requirements.

H. Source Limitations: Where possible, for each type of wiring device furnish products produced by a single manufacturer and obtained from a single supplier.

2.02 APPLICATIONS

A. Provide wiring devices suitable for intended use and with ratings adequate for load served.

B. For single receptacles installed on an individual branch circuit, provide receptacle with ampere rating not less than that of the branch circuit.

C. Provide weather resistant GFI receptacles with specified weatherproof covers for all receptacles installed outdoors or in damp or wet locations.

D. Provide GFI protection for all receptacles installed within 6 feet of sinks.

E. Unless noted otherwise, do not use combination switch/receptacle devices.

F. For flush floor service fittings, use carpet flanges for installations in carpeted floors.

2.03 ALL WIRING DEVICES

A. Provide products listed and classified by Underwriters Laboratories Inc. as suitable for the purpose specified and indicated.

2.04 WALL SWITCHES

A. Manufacturers:
   1. Hubbell Incorporated; : www.hubbell-wiring.com.
   2. Leviton Manufacturing Company, Inc; : www.leviton.com.
   3. Pass & Seymour, a brand of Legrand North America, Inc; : www.legrand.us
   4. Substitutions: See Section 01 60 00 - Product Requirements.

B. All Wall Switches: AC only, quiet operating, general-use snap switches with silver alloy contacts, complying with NEMA WD 1 and NEMA WD 6, and listed as complying with UL 20 and where applicable, FS W-S-896; types as indicated on the drawings.
   1. Wiring Provisions: Terminal screws for side wiring and screw actuated binding clamp for back wiring with separate ground terminal screw.

C. Standard Wall Switches: Commercial specification grade, 20 A, 120/277 V with standard toggle type switch actuator and maintained contacts; single pole single throw, double pole single throw, three way, or four way as indicated on the drawings.

D. Wall Switches: Heavy Duty, AC only general-use snap switch, complying with NEMA WD 6 and WD 1.
   1. Body and Handle: White plastic with toggle handle.
   2. Ratings:
      a. Voltage: 120 - 277 volts, AC.
      b. Current: 20 amperes.
   3. Ratings: Match branch circuit and load characteristics.

E. Switch Types: Single pole, double pole, 3-way, and 4-way.

2.05 WALL DIMMERS

A. Manufacturers:
   1. Leviton Manufacturing Company, Inc; _____: www.leviton.com.
   2. Lutron Electronics Company, Inc; Maestro Series: www.lutron.com.
   3. Pass & Seymour, a brand of Legrand North America, Inc; _____: www.legrand.us
   4. Substitutions: See Section 01 60 00 - Product Requirements.

B. All Wall Dimmers: Solid-state with continuous full-range even control following square law dimming curve, integral radio frequency interference filtering, power failure preset memory, air gap switch accessible without removing wall plate, complying with NEMA WD 1 and NEMA WD 6, and listed as complying with UL 1472; types and ratings suitable for load controlled as indicated on the drawings.

C. Control: Slide control type with separate on/off switch.

2.06 RECEPTACLES

A. Manufacturers:
   1. Hubbell Incorporated; : www.hubbell-wiring.com.
   2. Leviton Manufacturing Company, Inc; : www.leviton.com.
   3. Pass & Seymour, a brand of Legrand North America, Inc; : www.legrand.us
   4. Substitutions: See Section 01 60 00 - Product Requirements.

B. All Receptacles: Self-grounding, complying with NEMA WD 1 and NEMA WD 6, and listed as complying with UL 498, and where applicable, FS W-C-596; types as indicated on the drawings.
   1. Wiring Provisions: Terminal screws for side wiring or screw actuated binding clamp for back wiring with separate ground terminal screw.
   2. NEMA configurations specified are according to NEMA WD 6.

C. GFI Receptacles:
   1. All GFI Receptacles: Provide with feed-through protection, light to indicate ground fault tripped condition and loss of protection, and list as complying with UL 943, class A.

D. Receptacles: Heavy duty, complying with NEMA WD 6 and WD 1.
   1. Device Body: Black plastic.
   2. Configuration: NEMA WD 6, type as specified and indicated.

E. Convenience Receptacles: Type 5 - 20.

F. Single Convenience Receptacles.

G. Duplex Convenience Receptacles.

H. GFCI Receptacles: Convenience receptacle with integral ground fault circuit interrupter to meet regulatory requirements.

2.07 TELEPHONE JACKS

A. Product: AMP manufacturing

B. Substitutions: See Section 01 60 00 - Product Requirements.

2.08 WALL PLATES

A. Manufacturers:
   1. Hubbell Incorporated; : www.hubbell-wiring.com.
   2. Leviton Manufacturing Company, Inc; : www.leviton.com.
   3. Pass & Seymour, a brand of Legrand North America, Inc; : www.legrand.us
   4. Substitutions: See Section 01 60 00 - Product Requirements.

B. All Wall Plates: Comply with UL 514D.
   1. Configuration: One piece cover as required for quantity and types of corresponding wiring devices.
   2. Size: Standard; .
   3. Screws: Metal with slotted heads finished to match wall plate finish.

C. Stainless Steel Wall Plates: Brushed satin finish, Type 302 stainless steel.

D. Decorative Cover Plates: stainless steel.

E. Jumbo Cover Plates: stainless steel.

F. Weatherproof Cover Plates: Gasketed cast metal with hinged cover.

2.09 FLOOR BOX SERVICE FITTINGS

A. Manufacturers:
   1. Hubbell Incorporated; : www.hubbell-wiring.com.
   2. Thomas & Betts Corporation; : www.tnb.com.
   3. Wiremold, a brand of Legrand North America, Inc; : www.legrand.us
   4. Substitutions: See Section 01 60 00 - Product Requirements.

B. Description: Service fittings compatible with floor boxes provided under Section 26 05 37 with all components, adapters, and trims required for complete installation.

C. Flush Floor Service Fittings:
   1. Dual Service Flush Combination Outlets:
      a. Cover: Rectangular.
      b. Configuration:
         1) Power: One standard convenience duplex receptacle(s) with duplex flap opening(s).
         2) Communications: _____.
   2. Accessories:
      a. Carpet Flanges: Finish to match covers; configuration as required to accommodate specified covers.

PART 3 EXECUTION

3.01 EXAMINATION

A. Verify that field measurements are as shown on the drawings.

B. Verify that outlet boxes are installed in proper locations and at proper mounting heights and are properly sized to accommodate devices and conductors in accordance with NFPA 70.

C. Verify that wall openings are neatly cut and will be completely covered by wall plates.

D. Verify that final surface finishes are complete, including painting.

E. Verify that floor boxes are adjusted properly.

F. Verify that branch circuit wiring installation is completed, tested, and ready for connection to wiring devices.

G. Verify that openings in access floor are in proper locations.

H. Verify that conditions are satisfactory for installation prior to starting work.

3.02 PREPARATION

A. Provide extension rings to bring outlet boxes flush with finished surface.

B. Clean dirt, debris, plaster, and other foreign materials from outlet boxes.

3.03 INSTALLATION

A. Perform work in a neat and workmanlike manner in accordance with NECA 1 and, where applicable, NECA 130, including mounting heights specified in those standards unless otherwise indicated.

B. Perform work in a neat and workmanlike manner in accordance with NECA 1, including mounting heights specified in that standard unless otherwise indicated.

C. Coordinate locations of outlet boxes provided under Section 26 05 37 as required for installation of wiring devices provided under this section.

D. Install wiring devices in accordance with manufacturer's instructions.

E. Install permanent barrier between ganged wiring devices when voltage between adjacent devices exceeds 300 V.

F. Where required, connect wiring devices using pigtails not less than 6 inches long. Do not connect more than one conductor to wiring device terminals.

G. Connect wiring devices by wrapping conductor clockwise 3/4 turn around screw terminal and tightening to proper torque specified by the manufacturer. Where present, do not use push-in pressure terminals that do not rely on screw-actuated binding.

H. Unless otherwise indicated, connect wiring device grounding terminal to branch circuit equipment grounding conductor and to outlet box with bonding jumper.

I. Install securely, in a neat and workmanlike manner, as specified in NECA 1.

J. Install wiring devices plumb and level with mounting yoke held rigidly in place.

K. Install wall switches with OFF position down.

L. Do not share neutral conductor on branch circuits utilizing wall dimmers.

M. Install vertically mounted receptacles with grounding pole on top and horizontally mounted receptacles with grounding pole on left.

N. Install wall plates to fit completely flush to wall with no gaps and rough opening completely covered without strain on wall plate. Repair or reinstall improperly installed outlet boxes or improperly sized rough openings. Do not use oversized wall plates in lieu of meeting this requirement.

O. Install blank wall plates on junction boxes and on outlet boxes with no wiring devices installed or designated for future use.

P. Install receptacles with grounding pole on top.

Q. Connect wiring device grounding terminal to outlet box with bonding jumper.

R. Install decorative plates on switch, receptacle, and blank outlets in finished areas.

S. Connect wiring devices by wrapping conductor around screw terminal.

T. Use jumbo size plates for outlets installed in masonry walls.

U. Install galvanized steel plates on outlet boxes and junction boxes in unfinished areas, above accessible ceilings, and on surface mounted outlets.

3.04 INTERFACE WITH OTHER PRODUCTS

A. Coordinate locations of outlet boxes provided under Section 26 05 37 to obtain mounting heights.

B. Install wall switch 48 inches above finished floor.

C. Install convenience receptacle 18 inches above finished floor.

D. Install convenience receptacle 6 inches above backsplash of counter.

E. Install telephone jack 18 inches above finished floor.

F. Install telephone jack for side-reach wall telephone to position top of telephone at 54 inches above finished floor.

G. Install telephone jack for forward-reach wall telephone to position top of telephone at 48 inches above finished floor.

H. Coordinate installation of access floor boxes with access floor system provided under Section 09 69 00.

I. Coordinate the installation of wiring devices with underfloor duct service fittings provided under Section 26 05 40.

3.05 FIELD QUALITY CONTROL

A. Perform field inspection, testing, adjusting, and balancing in accordance with Section 01 40 00.

B. Inspect each wiring device for damage and defects.

C. Operate each wall switch, wall dimmer, and fan speed controller with circuit energized to verify proper operation.

D. Operate each wall switch with circuit energized and verify proper operation.

E. Verify that each receptacle device is energized.

F. Test each receptacle to verify operation and proper polarity.

G. Test each GFCI receptacle for proper tripping operation according to manufacturer's instructions.

H. Correct wiring deficiencies and replace damaged or defective wiring devices.

I. Verify that each telephone jack is properly connected and circuit is operational.

3.06 ADJUSTING

A. Adjust devices and wall plates to be flush and level.

3.07 CLEANING

A. Clean exposed surfaces to remove dirt, paint, or other foreign material and restore to match original factory finish.

END OF SECTION

SECTION 26 28 13

FUSES

PART 1 GENERAL

1.01 SECTION INCLUDES

A. Fuses.

1.02 REFERENCE STANDARDS

A. NEMA FU 1 - Low Voltage Cartridge Fuses; National Electrical Manufacturers Association.

B. NFPA 70 - National Electrical Code; National Fire Protection Association.

C. UL 248-1 - Low-Voltage Fuses - Part 1: General Requirements.

1.03 SUBMITTALS

A. See Section 01 30 00 - Administrative Requirements, for submittal procedures.

B. Product Data: Provide manufacturer's standard data sheets including voltage and current ratings, interrupting ratings, time-current curves, and current limitation curves.

1.04 QUALITY ASSURANCE

A. Conform to requirements of NFPA 70.

B. Manufacturer Qualifications: Company specializing in manufacturing the products specified in this section with minimum three years documented experience and with service facilities within 100 miles of Project.

C. Products: Listed and classified by Underwriters Laboratories Inc. as suitable for the purpose specified and indicated.

1.05 MAINTENANCE MATERIALS

A. See Section 01 60 00 - Product Requirements, for additional provisions.

B. Furnish two fuse pullers.

C. Furnish three of each size and type fuse installed.

PART 2 PRODUCTS

2.01 MANUFACTURERS

A. Cooper Bussmann, a division of Cooper Industries: www.cooperindustries.com.

B. Mersen (formerly Ferraz Shawmut): ferrazshawmut.mersen.com.

C. Littelfuse, Inc: www.littelfuse.com.

D. Substitutions: See Section 01 60 00 - Product Requirements.

2.02 FUSES

A. Provide products listed and classified by Underwriters Laboratories Inc. as suitable for the purpose indicated.

B. Unless specifically indicated to be excluded, provide fuses for all fusible equipment as required for a complete operating system.

C. Provide fuses of the same type, rating, and manufacturer within the same switch.

D. Comply with UL 248-1.

E. Unless otherwise indicated, provide cartridge type fuses complying with NEMA FU 1, Class and ratings as indicated.

F. Voltage Rating: Suitable for circuit voltage.

G. Power Load Feeder Switches: Class RK1 (time delay).

H. Motor Load Feeder Switches: Class RK1 (time delay).

I. Other Feeder Switches: Class RK1 (time delay).

J. General Purpose Branch Circuits: Class RK1 (time delay).

K. Motor Branch Circuits: Class L time delay.

L. Lighting Branch Circuits: Class G.

2.03 CLASS RK1 (TIME DELAY) FUSES

A. Manufacturers:
   1. Bussman Corp.
   2. Substitutions: See Section 01 60 00 - Product Requirements.

B. Construction: Current limiting, dual-element fuse, 10 seconds minimum at 500% rated amps, with copper fuse element.

2.04 CLASS G FUSES

PART 3 EXECUTION

3.01 INSTALLATION

A. Do not install fuses until circuits are ready to be energized.

B. Install fuses with label oriented such that manufacturer, type, and size are easily read.

END OF SECTION

SECTION 26 28 17

ENCLOSED CIRCUIT BREAKERS

PART 1 GENERAL

1.01 SECTION INCLUDES

A. Enclosed circuit breakers.

1.02 RELATED REQUIREMENTS

A. Section 26 05 26 - Grounding and Bonding for Electrical Systems.

B. Section 26 05 29 - Hangers and Supports for Electrical Systems.

C. Section 26 05 53 - Identification for Electrical Systems: Identification products and requirements.

1.03 REFERENCE STANDARDS

A. FS W-C-375 - Circuit Breakers, Molded Case; Branch Circuit and Service; Federal Specification.

B. NECA 1 - Standard for Good Workmanship in Electrical Construction; National Electrical Contractors Association.

C. NEMA 250 - Enclosures for Electrical Equipment (1000 Volts Maximum).

D. NETA STD ATS - Acceptance Testing Specifications for Electrical Power Distribution Equipment and Systems; International Electrical Testing Association.

E. NFPA 70 - National Electrical Code; National Fire Protection Association.

F. UL 50 - Enclosures for Electrical Equipment, Non-Environmental Considerations.

G. UL 50E - Enclosures for Electrical Equipment, Environmental Considerations.

H. UL 489 - Molded-Case Circuit Breakers, Molded-Case Switches and Circuit Breaker Enclosures.

1.04 SUBMITTALS

A. See Section 01 30 00 - Administrative Requirements, for submittal procedures.

B. Product Data: Provide manufacturer's standard catalog pages and data sheets for circuit breakers, enclosures, and other installed components and accessories.

C. Manufacturer's Installation Instructions: Indicate application conditions and limitations of use stipulated by product testing agency. Include instructions for storage, handling, protection, examination, preparation, installation, and starting of product.

1.05 QUALITY ASSURANCE

A. Conform to requirements of NFPA 70.

B. Maintain one copy of each document on site.

C. Manufacturer Qualifications: Company specializing in manufacturing the products specified in this section with minimum three years documented experience.

1.06 EXTRA MATERIALS

A. See Section 01 60 00 - Product Requirements, for additional provisions.

PART 2 PRODUCTS

2.01 MANUFACTURERS

A. Eaton Corporation; Cutler-Hammer Products: www.eaton.com.

B. General Electric Company: www.geindustrial.com.

C. Schneider Electric; Square D Products: www.schneider-electric.us.

D. Substitutions: See Section 01 60 00 - Product Requirements.

2.02 ENCLOSED CIRCUIT BREAKERS

A. Description: Units consisting of molded case circuit breakers individually mounted in enclosures.

B. Provide products listed and labeled by Underwriters Laboratories Inc. as suitable for the purpose indicated.

C. Unless otherwise indicated, provide products suitable for continuous operation under the following service conditions:
   1. Altitude: Less than 6,600 feet.
   2. Ambient Temperature: Between 23 degrees F and 104 degrees F.

D. Short Circuit Current Rating:
   1. Provide enclosed circuit breakers with listed short circuit current rating not less than the available fault current at the installed location indicated on the drawings.
   2. Listed series ratings are acceptable, except where not permitted by motor contribution according to NFPA 70.
   3. Label equipment utilizing series ratings as required by NFPA 70.

E. Conductor Terminations: Suitable for use with the conductors to be installed.

F. Provide solidly bonded equipment ground bus in each enclosed circuit breaker, with a suitable lug for terminating each equipment grounding conductor.

G. Enclosures: Comply with NEMA 250, and list and label as complying with UL 50 and UL 50E.
   1. Environment Type per NEMA 250: Unless otherwise indicated, as specified for the following installation locations:

H. Provide externally operable handle with means for locking in the OFF position.

2.03 MOLDED CASE CIRCUIT BREAKERS

A. Description: Quick-make, quick-break, over center toggle, trip-free, trip-indicating circuit breakers listed and labeled as complying with UL 489, and complying with FS W-C-375 where applicable; ratings, configurations, and features as indicated on the drawings.

B. Interrupting Capacity:
   1. Provide circuit breakers with interrupting capacity as required to provide the short circuit current rating indicated, but not less than:
   2. Fully Rated Systems: Provide circuit breakers with interrupting capacity not less than the short circuit current rating indicated.
   3. Series Rated Systems: Provide circuit breakers listed in combination with upstream devices to provide interrupting rating not less than the short circuit current rating indicated.

C. Conductor Terminations:
   1. Lug Material: Aluminum, suitable for terminating aluminum or copper conductors.

D. Multi-Pole Circuit Breakers: Furnish with common trip for all poles.

E. Molded Case Circuit Breakers: UL listed for the following service conditions:
   1. Temperature: 95 degrees F.
   2. Altitude: 1000 feet.

2.04 TRIP UNITS

A. Field-Adjustable Trip Circuit Breakers: Provide circuit breakers with frame sizes 200 amperes and larger with mechanism for adjusting long time continuous current, short time pickup current setting for automatic operation. Range of Adjustment: amperes.

B. Field-Changeable Ampere Rating Circuit Breaker: Provide circuit breakers with frame sizes 200 amperes and larger with changeable trip units.

C. Current Limiting Circuit Breaker: Provide circuit breaker as indicated with automatically-resetting current limiting elements in each pole. Let-through Current and Energy: Less than permitted for same size Class RK-5 fuse.

D. Solid-State Circuit Breaker: Provide circuit breaker as scheduled with electronic sensing, timing and tripping circuits for adjustable current settings; ground fault trip with zero sequence type ground fault sensor; instantaneous trip.

2.05 CURRENT LIMITERS

A. Current Limiters: Designed for application with molded case circuit breaker.

B. Coordinate limiter size with trip rating of circuit breaker to prevent nuisance tripping and to achieve interrupting current rating specified for circuit breaker.

C. Provide interlocks to trip circuit breaker and to prevent closing circuit breaker when limiter compartment cover is removed or when one or more limiter is not in place or has operated.

2.06 ACCESSORIES

A. Enclosures:
   1. Fabricate enclosures from steel.
   2. Finish: Manufacturer's standard enamel finish, gray color.

B. Provide accessories as scheduled.

C. Handle Lock: Include provisions for padlocking.

D. Provide mechanical trip device.

E. Provide grounding lug in each enclosure.

F. Provide products suitable for use as service entrance equipment where so applied.

PART 3 EXECUTION

3.01 INSTALLATION

A. Install enclosed circuit breakers where indicated, in accordance with manufacturer's instructions.

B. Install enclosed circuit breakers securely, in a neat and workmanlike manner in accordance with NECA 1.

C. Arrange equipment to provide minimum clearances in accordance with manufacturer's instructions and NFPA 70.

D. Provide required supports in accordance with Section 26 05 29.

E. Install enclosed circuit breakers plumb.

F. Except where indicated to be mounted adjacent to the equipment they supply, mount enclosed circuit breakers such that the highest position of the operating handle does not exceed 79 inches above the floor or working platform.

G. Provide grounding and bonding in accordance with Section 26 05 26.

H. Height: 5 feet to operating handle.

I. Provide identification nameplates for each enclosed circuit breaker in accordance with Section 26 05 53.

J. Provide arc flash warning labels in accordance with NFPA 70.

3.02 FIELD QUALITY CONTROL

A. Perform inspection, testing, and adjusting in accordance with Section 01 40 00.

B. Inspect and test in accordance with manufacturer's instructions and NETA STD ATS, except Section 4.

C. Perform inspections and tests listed in NETA STD ATS, Section 7.6.1.1 for circuit breakers used for service entrance and for circuit breakers larger than 400 amperes. Tests listed as optional are not required.

D. Correct deficiencies and replace damaged or defective enclosed circuit breakers.

E. Perform field inspection and testing in accordance with Section 01 40 00.

F. Inspect and test each circuit breaker.

G. Inspect each circuit breaker visually.

H. Perform several mechanical ON-OFF operations on each circuit breaker.

I. Verify circuit continuity on each pole in closed position.

J. Determine that circuit breaker will trip on overcurrent condition, with tripping time to NEMA AB 1 requirements.

K. Include description of testing and results in test report.

3.03 ADJUSTING

A. Adjust tightness of mechanical and electrical connections to manufacturer's recommended torque settings.

END OF SECTION

SECTION 26 28 18

ENCLOSED SWITCHES

PART 1 GENERAL

1.01 SECTION INCLUDES

A. Fusible switches.

B. Nonfusible switches.

1.02 RELATED REQUIREMENTS

A. Section 26 05 26 - Grounding and Bonding for Electrical Systems.

B. Section 26 05 29 - Hangers and Supports for Electrical Systems.

C. Section 26 05 53 - Identification for Electrical Systems: Identification products and requirements.

D. Section 26 28 13 - Fuses.

1.03 REFERENCE STANDARDS

A. NECA 1 - Standard for Good Workmanship in Electrical Construction; National Electrical Contractors Association.

B. NEMA FU 1 - Low Voltage Cartridge Fuses; National Electrical Manufacturers Association.

C. NEMA KS 1 - Enclosed and Miscellaneous Distribution Equipment Switches (600 Volts Maximum); National Electrical Manufacturers Association.

D. NETA STD ATS - Acceptance Testing Specifications for Electrical Power Distribution Equipment and Systems; International Electrical Testing Association.

E. NFPA 70 - National Electrical Code; National Fire Protection Association.

1.04 SUBMITTALS

A. See Section 01 30 00 - Administrative Requirements, for submittal procedures.

B. Product Data: Provide manufacturer's standard catalog pages and data sheets for enclosed switches and other installed components and accessories.

C. Project Record Documents: Record actual locations of enclosed switches.

1.05 QUALITY ASSURANCE

A. Conform to requirements of NFPA 70.

PART 2 PRODUCTS

2.01 MANUFACTURERS

A. Eaton Corporation; Cutler-Hammer Products; Model : www.eaton.com.

B. General Electric Company; Model : www.geindustrial.com.

C. Schneider Electric; Square D Products; Model : www.schneider-electric.us.

D. Substitutions: See Section 01 60 00 - Product Requirements.

2.02 COMPONENTS

A. Fusible Switch Assemblies: NEMA KS 1, Type HD enclosed load interrupter knife switch.
   1. Externally operable handle interlocked to prevent opening front cover with switch in ON position.
   2. Handle lockable in OFF position.
   3. Fuse clips: Designed to accommodate NEMA FU1, Class R fuses.

B. Nonfusible Switch Assemblies: NEMA KS 1, Type HD enclosed load interrupter knife switch.
   1. Externally operable handle interlocked to prevent opening front cover with switch in ON position.
   2. Handle lockable in OFF position.

C. Enclosures: NEMA KS 1.
   1. Interior Dry Locations: Type 1.
   2. Exterior Locations: Type 3R.

PART 3 EXECUTION

3.01 INSTALLATION

A. Install enclosed switches in accordance with manufacturer's instructions.

B. Install enclosed switches securely, in a neat and workmanlike manner in accordance with NECA 1.

C. Arrange equipment to provide minimum clearances in accordance with manufacturer's instructions and NFPA 70.

D. Provide required supports in accordance with Section 26 05 29.

E. Install enclosed switches plumb.

F. Except where indicated to be mounted adjacent to the equipment they supply, mount enclosed switches such that the highest position of the operating handle does not exceed 79 inches above the floor or working platform.

G. Provide grounding and bonding in accordance with Section 26 05 26.

H. Provide identification nameplate for each enclosed switch in accordance with Section 26 05 53.

I. Provide arc flash warning labels in accordance with NFPA 70.

J. Install fuses in fusible disconnect switches.

K. Apply adhesive tag on inside door of each fused switch indicating NEMA fuse class and size installed.

3.02 FIELD QUALITY CONTROL

A. Perform field inspection, testing, and adjusting in accordance with Section 01 40 00.

B. Inspect and test in accordance with NETA STD ATS, except Section 4.

C. Perform inspections and tests listed in NETA STD ATS, Section 7.5.1.1.

D. Correct deficiencies and replace damaged or defective enclosed safety switches or associated components.

END OF SECTION

SECTION 26 29 23

VARIABLE-FREQUENCY MOTOR CONTROLLERS

PART 1 GENERAL

1.01 SECTION INCLUDES

A. Variable frequency controllers.

1.02 RELATED REQUIREMENTS

A. Section 26 05 53 - Identification for Electrical Systems: Identification products and requirements.

B. Section 26 28 13 - Fuses.

1.03 REFERENCE STANDARDS

A. NEMA ICS 7.1 - Safety Standards for Construction and Guide for Selection, Installation, and Operation of Adjustable Speed Drive Systems; National Electrical Manufacturers Association.

B. NEMA ICS 7 - Industrial Control and Systems: Adjustable-Speed Drives; National Electrical Manufacturers Association.

C. NEMA 250 - Enclosures for Electrical Equipment (1000 Volts Maximum); National Electrical Manufacturers Association.

D. NETA STD ATS - Acceptance Testing Specifications for Electrical Power Distribution Equipment and Systems; International Electrical Testing Association.

E. NFPA 70 - National Electrical Code; National Fire Protection Association.

1.04 SUBMITTALS

A. See Section 01 30 00 - Administrative Requirements, for submittal procedures.

B. Product Data: Provide catalog sheets showing voltage, controller size, ratings and size of switching and overcurrent protective devices, short circuit ratings, dimensions, and enclosure details.

C. Shop Drawings: Indicate front and side views of enclosures with overall dimensions and weights shown; conduit entrance locations and requirements; and nameplate legends.

D. Test Reports: Indicate field test and inspection procedures and test results.

E. Manufacturer's Instructions: Indicate application conditions and limitations of use stipulated by testing agency. Include instructions for storage, handling, protection, examination, preparation, and installation of product.

F. Manufacturer's Field Reports: Indicate start-up inspection findings.

G. Maintenance Data: NEMA ICS 7.1. Include routine preventive maintenance schedule.

1.05 QUALITY ASSURANCE

A. Conform to requirements of NFPA 70.

B. Manufacturer Qualifications: Company specializing in manufacturing the products specified in this section with minimum three years documented experience and with service facilities within 100 miles of Project.

C. Products: Listed and classified by Underwriters Laboratories Inc. as suitable for the purpose specified and indicated.

1.06 DELIVERY, STORAGE, AND HANDLING

A. Store in a clean, dry space. Maintain factory wrapping or provide an additional heavy canvas or heavy plastic cover to protect units from dirt, water, construction debris, and traffic.

B. Handle in accordance with manufacturer's written instructions. Lift only with lugs provided for the purpose. Handle carefully to avoid damage to components, enclosure, and finish.

PART 2 PRODUCTS

2.01 MANUFACTURERS

A. Reliance Electric/Rockwell Automation: www.reliance.com.

B. Schneider Electric; Square D Products: www.schneider-electric.us.

C. _Danfoss.

D. Substitutions: See Section 01 60 00 - Product Requirements.

2.02 DESCRIPTION

A. Variable Frequency Controllers: Enclosed controllers suitable for operating the indicated loads, in conformance with requirements of NEMA ICS 7. Select unspecified features and options in accordance with NEMA ICS 3.1.
   1. Employ pulse-width-modulated inverter system.
   2. Design for ability to operate controller with motor disconnected from output.
   3. Design to attempt five automatic restarts following fault condition before locking out and requiring manual restart.

B. Enclosures: NEMA 250, Type 1, suitable for equipment application in places regularly open to the public.

C. Finish: Manufacturer's standard enamel.

2.03 OPERATING REQUIREMENTS

A. Rated Input Voltage: 480 volts, three phase, 60 Hertz.

B. Motor Nameplate Voltage: 460 volts, three phase, 60 Hertz.

C. Displacement Power Factor: Between 1.0 and 0.95, lagging, over entire range of operating speed and load.

D. Operating Ambient: 0 degrees C to 40 degrees C.

E. Minimum Efficiency at Full Load: 85 percent.

F. Time to Stop: 5 seconds.

G. Volts Per Hertz Adjustment: Plus or minus 0 percent.

H. Current Limit Adjustment: 60 to 110 percent of rated.

I. Acceleration Rate Adjustment: 0.5 to 30 seconds.

J. Deceleration Rate Adjustment: 1 to 30 seconds.

K. Input Signal: 4 to 20 mA DC.

2.04 COMPONENTS

A. Display: Provide integral digital display to indicate output voltage, output frequency, and output current.

B. Status Indicators: Separate indicators for overcurrent, overvoltage, ground fault, overtemperature, and input power ON.

C. Furnish HAND-OFF-AUTOMATIC selector switch and manual speed control.

D. Include undervoltage release.

E. Control Power Source: Integral control transformer.

F. Door Interlocks: Furnish mechanical means to prevent opening of equipment with power connected, or to disconnect power if door is opened; include means for defeating interlock by qualified persons.

G. Safety Interlocks: Furnish terminals for remote contact to inhibit starting under both manual and automatic mode.

H. Control Interlocks: Furnish terminals for remote contact to allow starting in automatic mode.

I. Emergency Stop: Use dynamic brakes for emergency stop function.

J. Disconnecting Means: Include integral fused disconnect switch on the line side of each controller.

K. Wiring Terminations: Match conductor materials and sizes indicated.

L. Line Reactor: Furnish line reactor (s) for harmonics mitigation.

2.05 SOURCE QUALITY CONTROL

A. Shop inspect and perform standard productions tests for each controller.

B. Make completed controller available for inspection at manufacturer's factory prior to packaging for shipment. Notify Red Clay Consolidated School District at least 7 days before inspection is allowed.

PART 3 EXECUTION

3.01 EXAMINATION

A. Verify that surface is suitable for controller installation.

B. Do not install controller until building environment can be maintained within the service conditions required by the manufacturer.

C. Verify that field measurements are as indicated on shop drawings.

3.02 INSTALLATION

A. Install in accordance with NEMA ICS 7.1 and manufacturer's instructions.

B. Tighten accessible connections and mechanical fasteners after placing controller.

C. Provide fuses in fusible switches; refer to Section 26 28 13 for product requirements.

D. Select and install overload heater elements in motor controllers to match installed motor characteristics.

E. Identify variable frequency controllers in accordance with Section 26 05 53.

3.03 FIELD QUALITY CONTROL

A. Provide the service of the manufacturer's field representative to prepare and start controllers.

B. Perform field inspection and testing in accordance with Section 01 40 00.

C. Inspect and test in accordance with NETA STD ATS, except Section 4.

D. Perform inspections and tests listed in NETA STD ATS, Section 7.17.

3.04 ADJUSTING

A. Make final adjustments to installed controller to assure proper operation of load system. Obtain performance requirements from installer of driven loads.

3.05 CLOSEOUT ACTIVITIES

A. Demonstrate operation of controllers in automatic and manual modes.

3.06 MAINTENANCE

A. See Section 01 70 00 - Execution Requirements, for additional requirements relating to maintenance service.

B. Provide a separate maintenance contract for specified maintenance service.

C. Provide service and maintenance of controllers for one year from Date of Substantial Completion.

END OF SECTION

SECTION 26 32 13

ENGINE GENERATORS

PART 1 GENERAL

1.01 SECTION INCLUDES

A. Packaged engine generator system and associated components and accessories:
   1. Engine and engine accessory equipment.
   2. Alternator (generator).
   3. Generator set control system.
   4. Generator set enclosure.

B. Packaged engine generator set.

C. Heat exchanger.

D. Exhaust silencer, emissions controls, and fittings.

E. Remote control panel.

F. Battery and charger.

G. Sound enclosure.

1.02 RELATED REQUIREMENTS

A. Section 26 36 00 - Transfer Switches: Automatic transfer switch.

1.03 REFERENCE STANDARDS

A. NECA/EGSA 404 - Recommended Practice for Installing Generator Sets; National Electrical Contractors Association.

B. NEMA MG 1 - Motors and Generators; National Electrical Manufacturers Association.

C. NEMA 250 - Enclosures for Electrical Equipment (1000 Volts Maximum); National Electrical Manufacturers Association.

D. NFPA 30 - Flammable and Combustible Liquids Code; National Fire Protection Association.

E. NFPA 70 - National Electrical Code; National Fire Protection Association.

F. NFPA 99 - Standard for Health Care Facilities; National Fire Protection Association.

G. NFPA 110 - Standard for Emergency and Standby Power Systems; National Fire Protection Association.

1.04 ADMINISTRATIVE REQUIREMENTS

A. Coordination:
   1. Coordinate compatibility of generator sets to be installed with work provided under other sections or by others.
   2. Coordinate the work with other trades to avoid placement of ductwork, piping, equipment or other potential obstructions within the spaces dedicated for engine generator system.
   3. Coordinate arrangement of equipment with the dimensions and clearance requirements of the actual equipment to be installed.
   4. Coordinate the work to provide electrical circuits suitable for the power requirements of the actual auxiliary equipment and accessories to be installed.

5. Notify Architect of any conflicts with or deviations from the contract documents. Obtain direction before proceeding with work.

B. Preinstallation Meeting: Convene one week before starting work of this section.

1.05 SUBMITTALS

A. See Section 01 30 00 - Administrative Requirements, for submittal procedures.

B. Product Data: Provide manufacturer's standard catalog pages and data sheets for each product, including ratings, configurations, dimensions, finishes, weights, service condition requirements, and installed features. Include alternator starting capabilities, engine fuel consumption rates, and cooling, combustion air, and exhaust requirements.
   1. Include generator set sound level test data.
   2. Include characteristic trip curves for overcurrent protective devices upon request.
   3. Include alternator thermal damage curve upon request.

C. Shop Drawings: Include dimensioned plan views and sections indicating locations of system components, required clearances, and field connection locations. Include system interconnection schematic diagrams showing all factory and field connections.

D. Specimen Warranty: Submit sample of manufacturer's warranty.

E. Manufacturer's Installation Instructions: Indicate application conditions and limitations of use stipulated by product testing agency. Include instructions for storage, handling, protection, examination, preparation, installation, and operation of product.

F. Manufacturer's factory emissions certification.

G. Manufacturer's certification that products meet or exceed specified requirements.

H. Provide NFPA 110 required documentation from manufacturer where requested by authorities having jurisdiction, including but not limited to:
   1. Certified prototype tests.
   2. Torsional vibration compatibility certification.
   3. NFPA 110 compliance certification.
   4. Certified rated load test at rated power factor.

I. Manufacturer’s detailed field testing procedures.

J. Field quality control test reports.

K. Maintenance contracts.

L. Project Record Documents: Record actual locations of system components, installed circuiting arrangements and routing, and final equipment settings.

M. Maintenance Materials: Furnish the following for Red Clay Consolidated School District's use in maintenance of project.
   1. See Section 01 60 00 - Product Requirements, for additional provisions.
   2. Extra Fuses: One of each type and size.
   3. Extra Filter Elements: One of each type, including fuel, oil and air.

N. Shop Drawings: Indicate electrical characteristics and connection requirements. Show plan and elevation views with overall and interconnection point dimensions, fuel consumption rate curves at various loads, ventilation and combustion air requirements, electrical diagrams including schematic and interconnection diagrams.

O. Product Data: Provide data showing dimensions, weights, ratings, interconnection points, and internal wiring diagrams for engine, generator, control panel, battery, battery rack, battery charger, exhaust silencer, vibration isolators, day tank, and remote radiator.

P. Test Reports: Indicate results of performance testing.

Q. Manufacturer's Installation Instructions: Indicate application conditions and limitations of use stipulated by product testing agency. Include instructions for storage, handling, protection, examination, preparation, installation, and starting of product.

R. Manufacturer's Certificate: Certify that products meet or exceed specified requirements.

S. Manufacturer's Field Reports: Indicate procedures and findings.

T. Operation Data: Include instructions for normal operation.

U. Maintenance Data: Include instructions for routine maintenance requirements, service manuals for engine and day tank, oil sampling and analysis for engine wear, and emergency maintenance procedures.

V. Maintenance Materials and Tools: Furnish the following for Red Clay Consolidated School District's use in maintenance of project.
   1. Extra Filter Elements: One of each type, including fuel, oil and air.
   2. Tools: One set of tools required for preventative maintenance of the engine generator system. Package tools in adequately sized metal tool box.

1.06 QUALITY ASSURANCE

A. Comply with the following:
   1. NFPA 70 (National Electrical Code).

B. Maintain at the project site a copy of each referenced document that prescribes execution requirements.

C. Manufacturer Qualifications: Company specializing in manufacturing the products specified in this section with minimum three years documented experience.
   1. Authorized service facilities located within 200 miles of project site.

D. Installer Qualifications: Company specializing in performing the work of this section with minimum three years documented experience with engine generator systems of similar size, type, and complexity; manufacturer's authorized installer.

E. Maintenance Contractor Qualifications: Same entity as installer or different entity with specified qualifications.
   1. Contract maintenance office located within 200 miles of project site.

F. Products: Listed, classified, and labeled by Underwriter's Laboratories Inc. (UL) or testing firm acceptable to authorities having jurisdiction as suitable for the purpose indicated.

G. Conform to requirements of NFPA 70.
   1. Maintain one copy of each document on site.

H. Manufacturer Qualifications: Company specializing in manufacturing the products specified in this section with minimum three years documented experience with service facilities within 100 miles of Project.

I. Supplier Qualifications: Authorized distributor of specified manufacturer with minimum three years documented experience.

J. Products: Furnish products listed and classified by Underwriters Laboratories as suitable for purpose specified and indicated.

1.07 DELIVERY, STORAGE, AND HANDLING

A. Receive, inspect, handle, and store generator sets in accordance with manufacturer's instructions and NECA/EGSA 404.

B. Store in a clean, dry space. Maintain factory wrapping or provide an additional heavy canvas or heavy plastic cover to protect units from dirt, water, construction debris, and traffic.

C. Handle carefully in accordance with manufacturer's instructions to avoid damage to generator set components, enclosure, and finish.

1.08 FIELD CONDITIONS

A. Maintain field conditions within manufacturer's required service conditions during and after installation.

1.09 WARRANTY

A. See Section 01 78 00 - Closeout Submittals, for additional warranty requirements.

B. Provide minimum one year manufacturer warranty covering repair or replacement due to defective materials or workmanship.

C. Accept unit on site on skids. Inspect for damage.

D. Protect equipment from dirt and moisture by securely wrapping in heavy plastic.

PART 2 PRODUCTS

2.01 MANUFACTURERS

A. Packaged Engine Generator Set - Basis of Design: Kohler Power Systems

B. Packaged Engine Generator Set - Other Acceptable Manufacturers:
   1. Caterpillar Inc: www.cat.com/power-generation.
   2. Cummins Power Generation Inc: www.cumminspower.com.

C. Substitutions: See Section 01 60 00 - Product Requirements.

D. Products other than basis of design are subject to compliance with specified requirements and prior approval of Engineer. By using products other than basis of design, Contractor accepts responsibility for costs associated with any necessary modifications to related work, including any design fees.

E. Source Limitations: Furnish engine generator sets and associated components and accessories produced by a single manufacturer and obtained from a single supplier.

F. Caterpillar Inc: www.caterpillar.com.

G. Cummins Engine Company, I: www.cummins.com.

H. Kohler Power Systems: www.kohler.com.

I. Substitutions: See Section 01 60 00 - Product Requirements.

2.02 PACKAGED ENGINE GENERATOR SYSTEM

A. Provide new engine generator system consisting of all required equipment, sensors, conduit, boxes, wiring, piping, supports, accessories, system programming, etc. as necessary for a complete operating system that provides the functional intent indicated.

B. System Description:
   1. Application: _Stand by.
   2. Configuration: Single packaged engine generator set operated independently (not in parallel).

C. Description: NFPA 110, engine generator system to provide source of power for Level 1 applications conforming to NFPA 99.

D. System Capacity: 50 kW, 63 kVA at elevation of 100 feet above sea level, continuous rating using engine-mounted radiator.

2.03 ENGINE

A. Provide engine with adequate horsepower to achieve specified power output at rated speed, accounting for alternator efficiency and parasitic loads.

B. Engine Fuel System - Gaseous (Spark Ignition):
   1. Fuel Source: Natural gas.
   2. Engine Fuel Connections: Provide suitable, approved flexible fuel lines for coupling engine to fuel source.
   3. Provide components/features indicated and as necessary for operation and/or required by applicable codes, including but not limited to:
      a. Carburetor.
      b. Gas pressure regulators.
      c. Fuel shutoff control valves.
      d. Low gas pressure switches.

C. Engine Starting System:
   1. System Type: Electric, with DC solenoid-activated starting motor(s).
   2. Battery(s):
      a. Battery Type: Lead-acid.
      b. Battery Capacity: Size according to manufacturer's recommendations for achieving starting and load acceptance requirements under worst case ambient temperature; capable of providing cranking through two complete periods of cranking limiter time-outs without recharging.
      c. Provide battery rack, cables, and connectors suitable for the supplied battery(s); size battery cables according to manufacturer's recommendations for cable length to be installed.
   3. Battery-Charging Alternator: Engine-driven, with integral solid-state voltage regulation.
   4. Battery Charger:
      a. Provide dual rate battery charger with automatic float and equalize charging modes and minimum rating of 10 amps; suitable for maintaining the supplied battery(s) at full charge without manual intervention.
      b. Capable of returning supplied battery(s) from fully discharged to fully charged condition within 24 hours, as required by NFPA 110 for Level 1 applications while carrying normal loads.
      c. Recognized as complying with UL 1236.
      d. Furnished with integral overcurrent protection; current limited to protect charger during engine cranking; reverse polarity protection.

e. Provide integral DC output ammeter and voltmeter with five percent accuracy.
f. Provide alarm output contacts as necessary for alarm indications.

5. Battery Heater: Provide thermostatically controlled battery heater to improve starting under cold ambient conditions.

D. Engine Speed Control System (Governor):
1. Single Engine Generator Sets (Not Operated in Parallel): Provide electronic isochronous governor for controlling engine speed/alternator frequency.
2. Frequency Regulation, Electronic Isochronous Governors: No change in frequency from no load to full load; plus/minus 0.25 percent at steady state.

E. Engine Lubrication System:
1. System Type: Full pressure, with engine-driven, positive displacement lubrication oil pump, replaceable full-flow oil filter(s), and dip-stick for oil level indication. Provide oil cooler where recommended by manufacturer.
2. Oil Heater: Provide thermostatically controlled oil heater to improve starting under cold ambient conditions.

F. Engine Cooling System:
1. System Type: Closed-loop, liquid-cooled, with unit-mounted radiator/fan and engine-driven coolant pump; suitable for providing adequate cooling while operating at full load under worst case ambient temperature.
2. Fan Guard: Provide suitable guard to protect personnel from accidental contact with fan.

G. Engine Air Intake and Exhaust System:
1. Air Intake Filtration: Provide engine-mounted, replaceable, dry element filter.
2. Engine Exhaust Connection: Provide suitable, approved flexible connector for coupling engine to exhaust system.
3. Exhaust Silencer: Provide critical grade or better exhaust silencer with sound attenuation not less than basis of design; select according to manufacturer's recommendations to meet sound performance requirements, where specified.

H. Type: Water-cooled inline or V-type, four stroke cycle, electric ignition natural-gas internal combustion engine.

I. Rating: Sufficient to operate under 10 percent overload for one hour in an ambient of 90 degrees F at elevation of 1000 feet.

J. Fuel System: Natural gas. Include manufacturer's approved regulator for pressure reduction from supply pressure.

K. Engine speed: 1800 rpm.

L. Governor: Isochronous type to maintain engine speed within 0.5 percent, steady state, and 5 percent, no load to full load, with recovery to steady state within 2 seconds following sudden load changes. Equip governor with means for manual operation and adjustment.

M. Safety Devices: Engine shutdown on high water temperature, low oil pressure, overspeed, and engine overcrank. Limits as selected by manufacturer.

N. Engine Starting: DC starting system with positive engagement, number and voltage of starter motors in accordance with manufacturer's instructions. Include remote starting control circuit, with MANUAL-OFF-REMOTE selector switch on engine-generator control panel.

O. Engine Jacket Heater: Thermal circulation type water heater with integral thermostatic control, sized to maintain engine jacket water at 90 degrees F, and suitable for operation on 120 volts AC.

P. Radiator: Radiator using glycol coolant, with blower type fan, sized to maintain safe engine temperature in ambient temperature of 110 degrees F. Radiator air flow restriction 0.5 inches of water maximum.

Q. Engine Accessories: Fuel filter, lube oil filter, intake air filter, lube oil cooler, fuel transfer pump, fuel priming pump, gear-driven water pump. Include fuel pressure gage, water temperature gage, and lube oil pressure gage on engine/generator control panel.

R. Mounting: Provide unit with suitable spring-type vibration isolators and mount on structural steel base.

2.04 GENERATOR

A. Alternator: 4-pole, 1800 rpm (60 Hz output) revolving field, synchronous generator complying with NEMA MG 1; connected to engine with flexible coupling; voltage output configuration as indicated, with reconnectable leads for 3 phase alternators.

B. Exciter:
   1. Exciter Type: Brushless; provide permanent magnet generator (PMG) excitation system; self-excited (shunt) systems are not permitted.
   2. PMG Excitation Short-Circuit Current Support: Capable of sustaining 300 percent of rated output current for 10 seconds.
   3. Voltage Regulation (with PMG excitation): Plus/minus 0.5 percent for any constant load from no load to full load.

C. Temperature Rise: Comply with UL 2200.

D. Insulation System: NEMA MG 1, Class H; suitable for alternator temperature rise.

E. Enclosure: NEMA MG 1, drip-proof.

F. Total Harmonic Distortion: Not greater than five percent.

G. Alternator Heater: Provide strip heater to prevent moisture condensation on alternator windings.

2.05 GENERATOR SET CONTROL SYSTEM

A. Provide microprocessor-based control system for automatic control, monitoring, and protection of generator set. Include sensors, wiring, and connections necessary for functions/indications specified.

B. Control Panel:
   1. Control Panel Mounting: Unit-mounted unless otherwise indicated; vibration isolated.
   2. Generator Set Control Functions:
      a. Automatic Mode: Initiates generator set start/shutdown upon receiving corresponding signal from remote device (e.g. automatic transfer switch).
      b. Manual Mode: Initiates generator set start/shutdown upon direction from operator.
      c. Reset Mode: Clears all faults, allowing generator set restart after a shutdown.
      d. Emergency Stop: Immediately shuts down generator set (without time delay) and prevents automatic restarting until manually reset.
      e. Cycle Cranking: Programmable crank time, rest time, and number of cycles.
      f. Time Delay: Programmable for shutdown (engine cooldown) and start (engine warmup).
      g. Voltage Adjustment: Adjustable through range of plus/minus 5 percent.
   3. Generator Set Status Indications:
      a. Voltage (Volts AC): Line-to-line, line-to-neutral for each phase.

b. Current (Amps): For each phase.
c. Frequency (Hz).
d. Real power (W/kW).
e. Reactive power (VAR/kVAR).
f. Apparent power (VA/kVA).
g. Power factor.
h. Duty Level: Actual load as percentage of rated power.
i. Engine speed (RPM).
j. Battery voltage (Volts DC).
k. Engine oil pressure.
l. Engine coolant temperature.
m. Engine run time.
n. Generator powering load (position signal from transfer switch).

4. Generator Set Protection and Warning/Shutdown Indications:
   a. Comply with NFPA 110; configurable for NFPA 110 Level 1 or Level 2, or NFPA 99 systems including but not limited to the following protections/indications:
      1) Overcrank (shutdown).
      2) Low coolant temperature (warning).
      3) High coolant temperature (warning).
      4) High coolant temperature (shutdown).
      5) Low oil pressure (shutdown).
      6) Overspeed (shutdown).
      7) Low fuel level (warning).
      8) Low coolant level (warning/shutdown).
      9) Generator control not in automatic mode (warning).
      10) High battery voltage (warning).
      11) Low cranking voltage (warning).
      12) Low battery voltage (warning).
      13) Battery charger failure (warning).
   b. Provide contacts for local and remote common alarm.

C. Remote Annunciator:
1. Remote Annunciator Mounting: Wall-mounted; Provide flush-mounted annunciator for finished areas and surface-mounted annunciator for non-finished areas unless otherwise indicated.
2. Generator Set Status Indications:
   a. Generator powering load (via position signal from transfer switch).
3. Generator Set Warning/Shutdown Indications:
   a. Comply with NFPA 110 for Level 1 systems including but not limited to the following indications:
      1) Overcrank (shutdown).
      2) Low coolant temperature (warning).
      3) High coolant temperature (warning).
      4) High coolant temperature (shutdown).
      5) Low oil pressure (shutdown).
      6) Overspeed (shutdown).
      7) Low fuel level (warning).
      8) Low coolant level (warning/shutdown).
      9) Generator control not in automatic mode (warning).
      10) High battery voltage (warning).
      11) Low cranking voltage (warning).
      12) Low battery voltage (warning).
      13) Battery charger failure (warning).
   b. Provide audible alarm with silence function.

c. Provide lamp test function that illuminates all indicator lamps.

2.06 GENERATOR SET ENCLOSURE

A. Enclosure Type: Sound attenuating, weather protective.

B. Enclosure Material: Aluminum.

C. Hardware Material: Stainless steel.

D. Color: Manufacturer's standard.

E. Access Doors: Lockable, with all locks keyed alike.

F. Openings: Designed to prevent bird/rodent entry.

G. External Drains: Extend oil and coolant drain lines to exterior of enclosure for maintenance service.

H. Sound Attenuating Enclosures: Line enclosure with non-hydroscopic, self-extinguishing sound-attenuating material.

I. Exhaust Silencers: Where exhaust silencers are mounted within enclosure in main engine compartment, insulate silencer to minimize heat dissipation as necessary for operation at rated load under worst case ambient temperature.

J. Enclosure Space Heater: Provide thermostatically controlled enclosure space heater to prevent condensation and improve starting under cold ambient conditions; size according to manufacturer's recommendations for achieving starting and load acceptance requirements under worst case ambient temperature.

2.07 SOURCE QUALITY CONTROL

A. See Section 01 40 00 - Quality Requirements, for additional requirements.

B. Perform production tests on generator sets at factory to verify operation and performance characteristics prior to shipment. Include certified test report with submittals.

C. Generator Set production testing to include, at a minimum:
   1. Operation at rated load and rated power factor.
   2. Single step load pick-up.
   3. Transient and steady state voltage and frequency performance.
   4. Operation of safety shutdowns.

D. Generator: NEMA MG 1, single phase, four pole, reconnectable brushless synchronous generator with brushless exciter.

E. Rating: 50 kW, 63 kVA, at 0.8 power factor, 480Y-277 volts, 60 Hz at 1800 rpm.

F. Insulation Class: F.

G. Temperature Rise: 105 degrees C Continuous.

H. Enclosure: NEMA MG 1, open drip proof.

I. Voltage Regulation: Include generator-mounted volts per hertz exciter-regulator to match engine and generator characteristics, with voltage regulation plus or minus 1 percent from no load to full load. Include manual controls to adjust voltage droop, voltage level (plus or minus 5 percent) and voltage gain.

2.08 ACCESSORIES

A. Heat Exchanger: Engine or base-mounted heat exchanger and expansion tank of type and capacity recommended by engine manufacturer. Include solenoid shut-off valve for installation on the cooling water inlet, and connected to open when engine runs.

B. Exhaust Silencer: Residential type silencer, with muffler companion flanges and flexible stainless steel exhaust fitting, sized in accordance with engine manufacturer's instructions.

C. Batteries: Heavy duty, diesel starting type lead-acid storage batteries, 170 ampere-hours minimum capacity. Match battery voltage to starting system. Include necessary cables and clamps.

D. Battery Tray: Treated for electrolyte resistance, constructed to contain spillage.

E. Battery Charger: Current limiting type designed to float at 2.17 volts per cell and equalize at 2.33 volts per cell. Include overload protection, full wave rectifier, DC voltmeter and ammeter, and 120 volts AC fused input. Provide wall-mounted enclosure to meet NEMA 250, Type 1 requirements.

F. Line Circuit Breaker: Molded case circuit breaker on generator output with integral thermal and instantaneous magnetic trip in each pole, sized in accordance with NFPA 70; UL listed. Include battery-voltage operated shunt trip, connected to open circuit breaker on engine failure. Unit mount in enclosure to meet NEMA 250, Type 1 requirements.

G. Engine-Generator Control Panel: NEMA 250, Type 1 generator mounted control panel enclosure with engine and generator controls and indicators. Include provision for padlock and the following equipment and features:
   1. Frequency Meter: 45-65 Hz. range, 3.5 inch dial.
   2. AC Output Voltmeter: 3.5 inch dial, 2 percent accuracy, with phase selector switch.
   3. AC Output Ammeter: 3.5 inch dial, 2 percent accuracy, with phase selector switch.
   4. Output voltage adjustment.
   5. Push-to-test indicator lamps, one each for low oil pressure, high water temperature, overspeed, and overcrank.
   6. Engine start/stop selector switch.
   7. Engine running time meter.
   8. Oil pressure gage.
   9. Water temperature gage.
   10. Auxiliary Relay: 3PDT, operates when engine runs, with contact terminals prewired to terminal strip.
   11. Additional visual indicators and alarms as required by NFPA 110.
   12. Remote Alarm Contacts: Pre-wire SPDT contacts to terminal strip for remote alarm functions required by NFPA 110.

H. Remote Annunciator Panel: Surface mounted panel with brushed stainless steel. Provide audible and visible indicators and alarms required by NFPA 110.

I. Emissions controls: Catalyst based, meeting State of Delaware Department of Natural Resourcese and Environmental Controls standards for stand-by generators.

J. Sound Enclosure:Lift based steel construction with hinged doors,.Accoustic insulation meeting UL94HF1 flammibility classification and repels moisture absorbption. Maximium sound level shall be 69 dB at 23.1 ft.

PART 3 EXECUTION

3.01 EXAMINATION

A. Verify that field measurements are as shown on the drawings.

B. Verify that the ratings and configurations of generator sets and auxiliary equipment are consistent with the indicated requirements.

C. Verify that rough-ins for field connections are in the proper locations.

D. Verify that mounting surfaces are ready to receive equipment.

E. Verify that conditions are satisfactory for installation prior to starting work.

3.02 INSTALLATION

A. Perform work in a neat and workmanlike manner in accordance with NECA 1.

B. Install in accordance with manufacturer's instructions.

C. Install securely, in a neat and workmanlike manner, as specified in NECA/EGSA 404.

D. Arrange equipment to provide minimum clearances and required maintenance access.

E. Unless otherwise indicated, mount generator set on properly sized 6 inch high concrete pad constructed in accordance with Section 03 30 00. Provide suitable vibration isolators, where not factory installed.

F. Provide required support and attachment in accordance with Section 26 05 29.

G. Use manufacturer's recommended oil and coolant, suitable for the worst case ambient temperatures.

H. Provide gas piping in accordance with Section 22 10 05.

I. Provide grounding and bonding in accordance with Section 26 05 26.

J. Identify system wiring and components in accordance with Section 26 05 53.

3.03 FIELD QUALITY CONTROL

A. See Section 01 40 00 - Quality Requirements, for additional requirements.

B. Provide services of a manufacturer's authorized representative to prepare and start systems and perform inspection and testing. Include manufacturer's detailed testing procedures and field reports with submittals.

C. Notify Red Clay Consolidated School District and Architect at least two weeks prior to scheduled inspections and tests.

D. Notify authorities having jurisdiction and comply with their requirements for scheduling inspections and tests and for observation by their personnel.

E. Provide all equipment, tools, and supplies required to accomplish inspection and testing, including load bank and fuel.

F. Preliminary inspection and testing to include, at a minimum:
   1. Inspect each system component for damage and defects.
   2. Verify tightness of mechanical and electrical connections are according to manufacturer's recommended torque settings.
   3. Check for proper oil and coolant levels.

G. Prepare and start system in accordance with manufacturer's instructions.

H. Inspection and testing to include, at a minimum:
   1. Verify compliance with starting and load acceptance requirements.
   2. Verify voltage and frequency; make required adjustments as necessary.

3. Verify phase sequence.
4. Verify control system operation, including safety shutdowns.
5. Verify operation of auxiliary equipment and accessories (e.g. battery charger, heaters, etc.).

I. Provide field emissions testing where necessary for certification.

J. Correct defective work, adjust for proper operation, and retest until entire system complies with contract documents.

K. Submit detailed reports indicating inspection and testing results and corrective actions taken.

L. Provide the services of manufacturer's representative to prepare and start system.

M. Perform field inspection and testing in accordance with Section 01 40 00.

N. Provide full load test utilizing portable test bank, if required, for four hours minimum. Simulate power failure including operation of transfer switch, automatic starting cycle, and automatic shutdown and return to normal.

O. Record in 20 minute intervals during four hour test:
1. Kilowatts.
2. Amperes.
3. Voltage.
4. Coolant temperature.
5. Room temperature.
6. Frequency.
7. Oil pressure.

P. Test alarm and shutdown circuits by simulating conditions.

Q. Field-verify emissions levels to meet manufacturer's documented criteria per submittals.

3.04 ADJUSTING

A. Adjust generator output voltage and engine speed.

3.05 CLEANING

A. Clean engine and generator surfaces. Replace oil and fuel filters.

3.06 CLOSEOUT ACTIVITIES

A. See Section 01 78 00 - Closeout Submittals, for closeout submittals.

B. Demonstration: Demonstrate proper operation of system to Red Clay Consolidated School District, and correct deficiencies or make adjustments as directed.

C. Training: Train Red Clay Consolidated School District's personnel on operation, adjustment, and maintenance of system.
1. Use operation and maintenance manual as training reference, supplemented with additional training materials as required.
2. Provide minimum of four hours of training.
3. Instructor: Manufacturer's authorized representative.
4. Location: At project site.

3.07 PROTECTION

A. Protect installed engine generator system from subsequent construction operations.

B. Demonstrate operation to Red Clay Consolidated School District's operating personnel:
   1. Describe loads connected to emergency system and restrictions for future load additions.
   2. Simulate power outage by interrupting normal source, and demonstrate that system operates to provide emergency power.

3.08 MAINTENANCE

A. Provide to Red Clay Consolidated School District a proposal as an alternate to the base bid, a separate maintenance contract for the service and maintenance of engine generator system for two years from date of Substantial Completion; Include a complete description of preventive maintenance, systematic examination, adjustment, inspection, and testing, with a detailed schedule.

B. Provide trouble call-back service upon notification by Red Clay Consolidated School District:
   1. Provide on-site response within 4 hours of notification.
   2. Include allowance for call-back service during normal working hours at no extra cost to Red Clay Consolidated School District.
   3. Red Clay Consolidated School District will pay for call-back service outside of normal working hours on an hourly basis, based on actual time spent at site and not including travel time; include hourly rate and definition of normal working hours in maintenance contract.

C. Maintain an on-site log listing the date and time of each inspection and call-back visit, the condition of the system, nature of the trouble, correction performed, and parts replaced.

D. Provide a separate maintenance contract for specified maintenance service.

E. Provide service and maintenance of engine generator for one year from Date of Substantial Completion.

END OF SECTION

SECTION 26 36 00

TRANSFER SWITCHES

PART 1 GENERAL

1.01 SECTION INCLUDES

A. Automatic Transfer Switch.

1.02 RELATED REQUIREMENTS

A. Section 26 05 53 - Identification for Electrical Systems: Identification products and requirements.

B. Section 26 32 13 - Engine Generators: Testing requirements.

1.03 REFERENCE STANDARDS

A. NEMA ICS 10 - Industrial Control and Systems: AC Transfer Switch Equipment; National Electrical Manufacturers Association.

B. NETA STD ATS - Acceptance Testing Specifications for Electrical Power Distribution Equipment and Systems; International Electrical Testing Association.

C. NFPA 70 - National Electrical Code; National Fire Protection Association.

1.04 SUBMITTALS

A. See Section 01 30 00 - Administrative Requirements, for submittal procedures.

B. Product Data: Provide catalog sheets showing voltage, switch size, ratings and size of switching and overcurrent protective devices, operating logic, short circuit ratings, dimensions, and enclosure details.

C. Manufacturer's Instructions: Indicate application conditions and limitations of use stipulated by product testing agency. Include instructions for storage, handling, protection, examination, preparation, and installation of product.

D. Operation Data: Instructions for operating equipment under emergency conditions when engine generator is running.

E. Maintenance Data: Routine preventative maintenance and lubrication schedule. List special tools, maintenance materials, and replacement parts.

1.05 QUALITY ASSURANCE

A. Conform to requirements of NFPA 70.

B. Manufacturer Qualifications: Company specializing in manufacturing the products specified in this section with minimum three years documented experience and with service facilities within 100 miles of Project.

C. Supplier Qualifications: Authorized distributor of specified manufacturer with minimum three years documented experience.

D. Products: Listed and classified by Underwriters Laboratories Inc. as suitable for the purpose specified and indicated.

PART 2 PRODUCTS

2.01 MANUFACTURERS

A. ASCO Power Technologies, LP: www.asco.com.

B. Eaton Corporation; Cutler-Hammer Products: www.eaton.com.

C. Substitutions: See Section 01 60 00 - Product Requirements.

2.02 AUTOMATIC TRANSFER SWITCH

A. Description: NEMA ICS 10, automatic transfer switch.225amp,4 pole, in NEMA1 enclosure.

B. Configuration: Electrically operated, mechanically held transfer switch.

C. Interrupting Capacity:42000 amp minimum ,rms .

2.03 SERVICE CONDITIONS

A. Service Conditions: NEMA ICS 10.

B. Temperature: 105 deg F.

C. Altitude: 3,300 feet.

2.04 COMPONENTS

A. Indicating Lights: Mount in cover of enclosure to indicate NORMAL SOURCE AVAILABLE.

B. Test Switch: Mount in cover of enclosure to simulate failure of normal source.

C. Return to Normal Switch: Mount in cover of enclosure to initiate manual transfer from alternate source to normal source.

D. Transfer Switch Auxiliary Contacts: 1 normally open; 1 normally closed.

E. Normal Source Monitor: Monitor each line of normal source voltage and frequency; initiate transfer when voltage drops below 85 percent or frequency varies more than 3 percent from rated nominal value.

F. Alternate Source Monitor: Monitor alternate source voltage and frequency; inhibit transfer when voltage is below 85 percent or frequency varies more than 3 percent from rated nominal value.

G. In-Phase Monitor: Inhibit transfer until source and load are within zero electrical degrees.

H. Switched Neutral: Overlapping contacts.

I. Enclosure: ICS 10, Type 1, finished with manufacturer's standard gray enamel.

2.05 AUTOMATIC SEQUENCE OF OPERATION

A. Initiate Time Delay to Start Alternate Source Engine Generator: Upon initiation by normal source monitor.

B. Time Delay To Start Alternate Source Engine Generator: 0 to 6 seconds, adjustable.

C. Initiate Transfer Load to Alternate Source: Upon initiation by normal source monitor and permission by alternate source monitor.

D. Time Delay Before Transfer to Alternate Power Source: 0 to 60 seconds, adjustable.

E. Initiate Retransfer Load to Normal Source: Upon permission by normal source monitor.

F. Time Delay Before Transfer to Normal Power: 0 to 60 seconds, adjustable; bypass time delay in event of alternate source failure.

G. Time Delay Before Engine Shut Down: 0 to 1 minutes, adjustable, of unloaded operation.

H. Engine Exerciser: Start engine every 15days run for 30 minutes before shutting down. Bypass exerciser control if normal source fails during exercising period.

PART 3 EXECUTION

3.01 EXAMINATION

A. Verify that surface is suitable for transfer switch installation.

3.02 PREPARATION

A. Provide 6" housekeeping pads.

3.03 INSTALLATION

A. Install in accordance with manufacturer's instructions.

B. Identify transfer switches in accordance with Section 26 05 53.

C. Provide engraved plastic nameplates under the provisions of Section 26 05 53.

3.04 FIELD QUALITY CONTROL

A. Provide the services of the manufacturer's technical representative to check out transfer switch connections and operation and place in service.

B. Perform field inspection and testing in accordance with Section 01 40 00.

C. Inspect and test in accordance with NETA STD ATS, except Section 4.

D. Perform inspections and tests listed in NETA STD ATS, Section 7.22.3.

3.05 CLOSEOUT ACTIVITIES

A. Demonstrate operation of transfer switch in bypass, normal, and emergency modes.

3.06 MAINTENANCE

A. See Section 01 70 00 - Execution Requirements, for additional requirements relating to maintenance service.

B. Provide a separate maintenance contract for specified maintenance service.

C. Provide service and maintenance of transfer switches for one year from Date of Substantial Completion.

END OF SECTION

SECTION 26 51 00

INTERIOR LIGHTING

PART 1 GENERAL

1.01 SECTION INCLUDES

A. Interior luminaires.

B. Emergency lighting units.

C. Exit signs.

D. Ballasts.

E. Lamps.

F. Luminaire accessories.

1.02 RELATED REQUIREMENTS

A. Section 26 05 37 - Boxes.

B. Section 26 05 53 - Identification for Electrical Systems: Identification products and requirements.

C. Section 26 09 23 - Lighting Control Devices: Automatic controls for lighting including occupancy sensors, outdoor motion sensors, time switches, outdoor photo controls, and daylighting controls.

D. Section 26 27 26 - Wiring Devices: Manual wall switches and wall dimmers.

E. Section 26 56 00 - Exterior Lighting.

1.03 REFERENCE STANDARDS

A. ANSI C78.379 - American National Standard for Electric Lamps -- Reflector Lamps -- Classification of Beam Patterns.

B. ANSI C82.1 - American National Standard for Lamp Ballast - Line Frequency Fluorescent Lamp Ballast.

C. ANSI C82.4 - American National Standard for Ballasts for High-Intensity-Discharge and Low Pressure Sodium Lamps (Multiple-Supply Type).

D. ANSI C82.11 - American National Standard for Lamp Ballasts - High Frequency Fluorescent Lamp Ballasts - Supplements.

E. IEEE C62.41.2 - Recommended Practice on Characterization of Surges in Low-Voltage (1000 V and less) AC Power Circuits.

F. NECA 1 - Standard for Good Workmanship in Electrical Construction; National Electrical Contractors Association.

G. NECA/IESNA 500 - Standard for Installing Indoor Commercial Lighting Systems; National Electrical Contractors Association.

H. NECA/IESNA 502 - Standard for Installing Industrial Lighting Systems; National Electrical Contractors Association.

I. NEMA WD 6 - Wiring Devices - Dimensional Requirements; National Electrical Manufacturers Association.

J. NFPA 70 - National Electrical Code; National Fire Protection Association.

K. NFPA 101 - Code for Safety to Life from Fire in Buildings and Structures; National Fire Protection Association.

L. UL 924 - Emergency Lighting and Power Equipment.

M. UL 935 - Fluorescent-Lamp Ballasts.

N. UL 1598 - Luminaires.

O. UL 8750 - Light Emitting Diode (LED) Equipment for Use in Lighting Products.

1.04 ADMINISTRATIVE REQUIREMENTS

A. Coordination:
   1. Coordinate the installation of luminaires with mounting surfaces installed under other sections or by others. Coordinate the work with placement of supports, anchors, etc. required for mounting. Coordinate compatibility of luminaires and associated trims with mounting surfaces at installed locations.
   2. Coordinate the placement of luminaires with structural members, ductwork, piping, equipment, diffusers, fire suppression system components, and other potential conflicts installed under other sections or by others.
   3. Coordinate the placement of exit signs with furniture, equipment, signage or other potential obstructions to visibility installed under other sections or by others.
   4. Notify Architect of any conflicts or deviations from the contract documents to obtain direction prior to proceeding with work.

1.05 SUBMITTALS

A. See Section 01 30 00 - Administrative Requirements, for submittal procedures.

B. Shop Drawings:
   1. Indicate dimensions and components for each luminaire that is not a standard product of the manufacturer.
   2. Provide photometric calculations where luminaires are proposed for substitution

C. Shop Drawings: Indicate dimensions and components for each luminaire that is not a standard product of the manufacturer.

D. Product Data: Provide manufacturer's standard catalog pages and data sheets including detailed information on luminaire construction, dimensions, ratings, finishes, mounting requirements, listings, service conditions, photometric performance, installed accessories, and ceiling compatibility; include model number nomenclature clearly marked with all proposed features.

E. Field Quality Control Reports.

F. Manufacturer's Installation Instructions: Indicate application conditions and limitations of use stipulated by product testing agency. Include instructions for storage, handling, protection, examination, preparation, and installation of product.

G. Operation and Maintenance Data: Instructions for each product including information on replacement parts.

H. Maintenance Materials: Furnish the following for Red Clay Consolidated School District's use in maintenance of project.
   1. See Section 01 60 00 - Product Requirements, for additional provisions.
   2. Extra Lenses and Louvers: Two percent of total quantity installed for each type, but not less than one of each type.
   3. Extra Lamps: Ten percent of total quantity installed for each type, but not less than two of each type.
   4. Extra Ballasts: Two percent of total quantity installed for each type, but not less than one of each type.

I. Project Record Documents: Record actual connections and locations of luminaires and any associated remote components.

1.06 QUALITY ASSURANCE

A. Conform to requirements of NFPA 70.

B. Conform to requirements of NFPA 70 and NFPA 101.

C. Manufacturer Qualifications: Company specializing in manufacturing the products specified in this section with minimum three years documented experience.

1.07 DELIVERY, STORAGE, AND PROTECTION

A. Receive, handle, and store products according to NECA/IESNA 500 (commercial lighting), NECA/IESNA 502 (industrial lighting), and manufacturer's written instructions.

B. Keep products in original manufacturer's packaging and protect from damage until ready for installation.

1.08 FIELD CONDITIONS

A. Maintain field conditions within manufacturer's required service conditions during and after installation.

1.09 WARRANTY

A. See Section 01 78 00 - Closeout Submittals, for additional warranty requirements.

B. Provide two year manufacturer warranty for all linear fluorescent ballasts.

1.10 EXTRA MATERIALS

A. See Section 01 60 00 - Product Requirements, for additional provisions.

B. Furnish two of each plastic lens type.

C. Furnish one replacement lamps for each lamp type.

D. Furnish two of each ballast type.

PART 2 PRODUCTS

2.01 MANUFACTURERS

A. Acuity Brands, Inc; : www.acuitybrands.com.

B. Cooper Lighting, a division of Cooper Industries; _____: www.cooperindustries.com.

C. Hubbell Lighting, Inc; : www.hubbelllighting.com.

D. Philps Lighting: www.usa.philips.com

E. Lithonia Lighting: www.lithonia.com.

F. Columbia Lighting.

G. Substitutions: See Section 01 60 00 - Product Requirements.

2.02 LUMINAIRES

A. Manufacturers:
   1. Acuity Brands, Inc; : www.acuitybrands.com.
   2. Cooper Lighting, a division of Cooper Industries; : www.cooperindustries.com.
   3. Hubbell Lighting, Inc; : www.hubbelllighting.com.
   4. Substitutions: See Section 01 60 00 - Product Requirements.

B. Provide products that comply with requirements of NFPA 70.

C. Provide products that are listed and labeled as complying with UL 1598, where applicable.

D. Provide products listed and classified by Underwriters Laboratories Inc. as suitable for the purpose specified and indicated.

E. Unless otherwise indicated, provide complete luminaires including lamp(s) and all sockets, ballasts, reflectors, lenses, housings and other components required to position, energize and protect the lamp and distribute the light.

F. Unless specifically indicated to be excluded, provide all required conduit, boxes, wiring, connectors, hardware, supports, trims, accessories, etc. as necessary for a complete operating system.

G. Provide products suitable to withstand normal handling, installation, and service without any damage, distortion, corrosion, fading, discoloring, etc.

H. LED Luminaires: Listed and labeled as complying with UL 8750.

I. Track Lighting Systems: Provide track compatible with specified track heads, with all connectors, power feed fittings, dead ends, hangers and canopies as necessary to complete installation.

J. Luminaires Mounted in Continuous Rows: Provide quantity of units required for length indicated, with all accessories required for joining and aligning.

2.03 EMERGENCY LIGHTING UNITS

A. Manufacturers:
   1. Acuity Brands, Inc; : www.acuitybrands.com.
   2. Cooper Lighting, a division of Cooper Industries; : www.cooperindustries.com.
   3. Hubbell Lighting, Inc; : www.hubbelllighting.com.
   4. Substitutions: See Section 01 60 00 - Product Requirements.

B. Description: Emergency lighting units complying with NFPA 101 and all applicable state and local codes, and listed and labeled as complying with UL 924. Emergency and Exit light combination unit with (2) unit mounted lamps and LED exit light with battery backup. Thois cmobination unit shall have spare capacity to power remote emergency lamp heads.

C. Operation: Upon interruption of normal power source or brownout condition exceeding 20 percent voltage drop from nominal, solid-state control automatically switches connected lamps to integral battery power for minimum of 90 minutes of rated emergency illumination, and automatically recharges battery upon restoration of normal power source.

D. Battery:
   1. Sealed maintenance-free nickel cadmium unless otherwise indicated.
   2.
   3. Size battery to supply all connected lamps, including emergency remote heads where indicated.

E. Diagnostics: Provide power status indicator light and accessible integral test switch to manually activate emergency operation.

F. Provide low-voltage disconnect to prevent battery damage from deep discharge.

G. Self-Diagnostics: Provide units that self-monitor functionality and automatically perform testing required by NFPA 101 where indicated; provide indicator light(s) to report test and diagnostic status.

H. Accessories:
   1. Provide compatible accessory mounting brackets where indicated or required to complete installation.
   2. Provide compatible accessory high impact polycarbonate vandal shields where indicated.
   3. Provide compatible accessory wire guards where indicated.
   4. Where indicated, provide emergency remote heads that are compatible with the emergency lighting unit they are connected to and suitable for the installed location.

2.04 LUMINAIRES

A. Furnish products as indicated in Schedule attached to this section.

B. Substitutions: See Section 01 60 00 - Product Requirements.
   1. Input Voltage: 120 or 277 volts.

2.05 EXIT SIGNS

A. Manufacturers:
   1. Acuity Brands, Inc; : www.acuitybrands.com.
   2. Cooper Lighting, a division of Cooper Industries; : www.cooperindustries.com.
   3. Hubbell Lighting, Inc; : www.hubbelllighting.com.
   4. Substitutions: See Section 01 60 00 - Product Requirements.

B. All Exit Signs: Internally illuminated with LEDs unless otherwise indicated; complying with NFPA 101 and all applicable state and local codes, and listed and labeled as complying with UL 924.
   1. Number of Faces: Single or double as indicated or as required for the installed location.
   2. Directional Arrows: As indicated or as required for the installed location.

C. Self-Powered Exit Signs:
   1. Operation: Upon interruption of normal power source or brownout condition exceeding 20 percent voltage drop from nominal, solid-state control automatically switches connected lamps to integral battery power for minimum of 90 minutes of rated emergency illumination, and automatically recharges battery upon restoration of normal power source.
   2. Battery: Sealed maintenance-free nickel cadmium unless otherwise indicated.
   3. Diagnostics: Provide power status indicator light and accessible integral test switch to manually activate emergency operation.
   4. Provide low-voltage disconnect to prevent battery damage from deep discharge.
   5. Self-Diagnostics: Provide units that self-monitor functionality and automatically perform testing required by NFPA 101 where indicated; provide indicator light(s) to report test

and diagnostic status.

D. Accessories:
   1. Provide compatible accessory high impact polycarbonate vandal shields where indicated.
   2. Provide compatible accessory wire guards where indicated.

E. Manufacturers: As indicated on lighting fixture schedule.
   1. Substitutions: See Section 01 60 00 - Product Requirements.

F. Exit Signs: Exit sign fixture.
   1. Housing: Plastic.
   2. Face: Translucent glass face with red letters on white background.
   3. Face: Aluminum stencil face with red letters.
   4. Directional Arrows: Universal type for field adjustment.
   5. Mounting: Universal, for field selection.
   6. Battery: 12 volt, nickel-cadmium type, with 1.5 hour capacity.
   7. Battery Charger: Dual-rate type, with sufficient capacity to recharge discharged battery to full charge within twelve hours.
   8. Lamps: Manufacturer's standard.
   9. Input Voltage: 120/277 volts.

2.06 BALLASTS

A. Manufacturers:
   1. General Electric Company/GE Lighting; : www.gelighting.com.
   2. Osram Sylvania; : www.sylvania.com.
   3. Philips Lighting Electronics/Advance; : www.advance.philips.com.
   4. Substitutions: See Section 01 60 00 - Product Requirements.
   5. Manufacturer Limitations: Where possible, for each type of luminaire provide ballasts produced by a single manufacturer.

B. All Ballasts:
   1. Provide ballasts containing no polychlorinated biphenyls (PCBs).
   2. Minimum Efficiency/Efficacy: Provide ballasts complying with all current applicable federal and state ballast efficiency/efficacy standards.

C. Fluorescent Ballasts:
   1. All Fluorescent Ballasts: Unless otherwise indicated, provide high frequency electronic ballasts complying with ANSI C82.11 and listed and labeled as complying with UL 935.
      a. Input Voltage: Suitable for operation at voltage of connected source, with variation tolerance of plus or minus 10 percent.
      b. Total Harmonic Distortion: Not greater than 10 percent.
      c. Power Factor: Not less than 0.95.
      d. Thermal Protection: Listed and labeled as UL Class P, with automatic reset for integral thermal protectors.
      e. Sound Rating: Class A, suitable for average ambient noise level of 20 to 24 decibels.
      f. Lamp Compatibility: Specifically designed for use with the specified lamp, with no visible flicker.
      g. Lamp Operating Frequency: Greater than 20 kHz, except as specified below.
         1) Do not operate lamp(s) within the frequencies from 30 kHz through 40 kHz in order to avoid interference with infrared devices.
      h. Lamp Current Crest Factor: Not greater than 1.7.
      i. Provide automatic restart capability to restart replaced lamp(s) without requiring resetting of power.

j. Provide end of lamp life automatic shut down circuitry for T5 and smaller diameter lamp ballasts.
k. Surge Tolerance: Capable of withstanding characteristic surges according to IEEE C62.41.2, location category A.
l. Electromagnetic Interference/Radio Frequency Interference (EMI/RFI) Limits: Comply with FCC requirements of CFR, Title 47, Part 18, for Class A, non-consumer application.
m. Provide high efficiency T8 lamp ballasts certified as NEMA premium where indicated.
n. Ballast Marking: Include wiring diagrams with lamp connections.

2. Non-Dimming Fluorescent Ballasts:
   a. Lamp Starting Method:
      1) T8 Lamp Ballasts: Programmed start unless otherwise indicated.
      2) T5 Lamp Ballasts: Programmed start unless otherwise indicated.
      3) Compact Fluorescent Lamp Ballasts: Programmed start unless otherwise indicated.
   b. Lamp Starting Temperature: Capable of starting standard lamp(s) at a minimum of 0 degrees F, and energy saving lamp(s) at a minimum of 60 degrees F unless otherwise indicated.

2.07 LAMPS

A. Manufacturers:
   1. General Electric Company/GE Lighting; : www.gelighting.com.
   2. Osram Sylvania; : www.sylvania.com.
   3. Philips Lighting Company; : www.lighting.philips.com.
   4. Philips Lighting Co of NA: www.lighting.philips.com.
   5. Substitutions: See Section 01 60 00 - Product Requirements.

B. All Lamps:
   1. Unless explicitly excluded, provide new, compatible, operable lamps in each luminaire.
   2. Verify compatibility of specified lamps with luminaires to be installed. Where lamps are not specified, provide lamps per luminaire manufacturer's recommendations.
   3. Minimum Efficiency: Provide lamps complying with all current applicable federal and state lamp efficiency standards.
   4. Color Temperature Consistency: Unless otherwise indicated, for each type of lamp furnish products which are consistent in perceived color temperature. Replace lamps that are determined by the Architect to be inconsistent in perceived color temperature.

C. Compact Fluorescent Lamps: Wattage and bulb type as indicated, with base type as required for luminaire.
   1. Low Mercury Content: Provide lamps that pass the EPA Toxicity Characteristic Leaching Procedure (TCLP) test for characteristic hazardous waste.
   2. Correlated Color Temperature (CCT): 3,500 K unless otherwise indicated.
   3. Color Rendering Index (CRI): Not less than 80.
   4. Average Rated Life: Not less than 10,000 hours for an operating cycle of three hours per start.

D. Linear Fluorescent Lamps: Wattage and bulb type as indicated, with base type as required for luminaire.
   1. Low Mercury Content: Provide lamps that pass the EPA Toxicity Characteristic Leaching Procedure (TCLP) test for characteristic hazardous waste.
   2. T8 Linear Fluorescent Lamps:
      a. Correlated Color Temperature (CCT): 3,500 K unless otherwise indicated.

b. Color Rendering Index (CRI): Not less than 80.
c. Average Rated Life: Not less than 20,000 hours for an operating cycle of three hours per start.

3. T5 Linear Fluorescent Lamps:
a. Correlated Color Temperature (CCT): 3,500 K unless otherwise indicated.
b. Color Rendering Index (CRI): Not less than 80.
c. Average Rated Life: Not less than 20,000 hours for an operating cycle of three hours per start.

E. Lamp Types: As specified for each luminaire.

F. Fluorescent Lamps:
1. Product: Phillips Lighting - Type T5 or T8.
2. Substitutions: See Section 01 60 00 - Product Requirements.

G. High Intensity Discharge (HID) Lamps:
1. Product: Match Lighting Fixture Type
2. Substitutions: See Section 01 60 00 - Product Requirements.

2.08 ACCESSORIES

A. Stems for Suspended Luminaires: Steel tubing, minimum 1/2" size, factory finished to match luminaire or field-painted as directed.

B. Threaded Rods for Suspended Luminaires: Zinc-plated steel, minimum 1/4" size, field-painted as directed.

C. Provide accessory plaster frames for luminaires recessed in plaster ceilings.

D. Tube Guards for Linear Fluorescent Lamps: Provide clear virgin polycarbonate sleeves with endcaps where indicated.

E. Product: As indicated in lighting fixture schedule.
1. Substitutions: See Section 01 60 00 - Product Requirements.

PART 3 EXECUTION

3.01 EXAMINATION

A. Verify that field measurements are as shown on the drawings.

B. Verify that outlet boxes are installed in proper locations and at proper mounting heights and are properly sized to accommodate conductors in accordance with NFPA 70.

C. Verify that suitable support frames are installed where required.

D. Verify that branch circuit wiring installation is completed, tested, and ready for connection to luminaires.

E. Verify that conditions are satisfactory for installation prior to starting work.

3.02 PREPARATION

A. Provide extension rings to bring outlet boxes flush with finished surface.

B. Clean dirt, debris, plaster, and other foreign materials from outlet boxes.

3.03 INSTALLATION

A. Coordinate locations of outlet boxes provided under Section 26 05 37 as required for installation of luminaires provided under this section.

B. Install products according to manufacturer's instructions.

C. Install luminaires securely, in a neat and workmanlike manner, as specified in NECA 1 (general workmanship), NECA 500 (commercial lighting), and NECA 502 (industrial lighting).

D. Install luminaires plumb and square and aligned with building lines and with adjacent luminaires.

E. Suspended Ceiling Mounted Luminaires:
   1. Do not use ceiling tiles to bear weight of luminaires.
   2. Do not use ceiling support system to bear weight of luminaires unless ceiling support system is certified as suitable to do so.
   3. Secure pendant-mounted luminaires to building structure.
   4. Secure lay-in luminaires to ceiling support channels using listed safety clips at four corners.
   5. In addition to ceiling support wires, provide two galvanized steel safety wire(s), minimum 12 gage, connected from opposing corners of each recessed luminaire to building structure.
   6. See appropriate Division 9 section where suspended grid ceiling is specified for additional requirements.

F. Recessed Luminaires:
   1. Install trims tight to mounting surface with no visible light leakage.
   2. Non-IC Rated Luminaires: Maintain required separation from insulation and combustible materials according to listing.
   3. Luminaires Recessed in Fire-Rated Ceilings: Install using accessories and firestopping materials to meet regulatory requirements for fire rating.

G. Suspended Luminaires:
   1. Install using the suspension method indicated, with support lengths and accessories as required for specified mounting height.
   2. Install canopies tight to mounting surface.

H. Wall-Mounted Luminaires: Unless otherwise indicated, specified mounting heights are to center of luminaire.

I. Install fixtures securely, in a neat and workmanlike manner, as specified in NECA 500 (commercial lighting).

J. Install suspended luminaires and exit signs using pendants supported from swivel hangers. Provide pendant length required to suspend luminaire at indicated height.

K. Support luminaires independent of ceiling framing.

L. Locate recessed ceiling luminaires as indicated on reflected ceiling plan.

M. Install surface mounted luminaires and exit signs plumb and adjust to align with building lines and with each other. Secure to prevent movement.

N. Exposed Grid Ceilings: Support surface mounted luminaires in grid ceiling directly from building structure.

O. Exposed Grid Ceilings: Provide auxiliary members spanning ceiling grid members to support surface mounted luminaires.

P. Exposed Grid Ceilings: Fasten surface mounted luminaires to ceiling grid members using bolts, screws, rivets, or suitable clips.

Q. Install recessed luminaires to permit removal from below.

R. Install recessed luminaires using accessories and firestopping materials to meet regulatory requirements for fire rating.

S. Install clips to secure recessed grid-supported luminaires in place.

T. Install wall mounted luminaires, emergency lighting units, and exit signs at height as scheduled.

U. Install accessories furnished with each luminaire.

V. Make wiring connections to branch circuit using building wire with insulation suitable for temperature conditions within luminaire.

W. Bond products and metal accessories to branch circuit equipment grounding conductor.

X. Install specified lamps in each emergency lighting unit, exit sign, and luminaire.

Y. Air Handling Luminaires: Interface with air handling accessories furnished and installed under Section 23 36 00.

Z. Emergency Lighting Units:
   1. Unless otherwise indicated, connect unit to unswitched power from same circuit feeding normal lighting in same room or area. Bypass local switches, contactors, or other lighting controls.

AA. Exit Signs:
   1. Unless otherwise indicated, connect unit to unswitched power from same circuit feeding normal lighting in same room or area. Bypass local switches, contactors, or other lighting controls.

AB. Install lamps in each luminaire.

AC. Lamp Burn-In: Operate lamps at full output for prescribed period per manufacturer's recommendations prior to use with any dimming controls. Replace lamps that fail prematurely due to improper lamp burn-in.

3.04 FIELD QUALITY CONTROL

A. See Section 01 40 00 - Quality Requirements, for additional requirements.

B. Inspect each product for damage and defects.

C. Perform field inspection, testing, and adjusting in accordance with Section 01 40 00.

D. Operate each luminaire after installation and connection to verify proper operation.

E. Test self-powered exit signs, emergency lighting units, and fluorescent emergency power supply units to verify proper operation upon loss of normal power supply.

F. Correct wiring deficiencies and repair or replace damaged or defective products. Repair or replace excessively noisy ballasts as determined by Architect.

3.05 ADJUSTING

A. Aim and position adjustable luminaires to achieve desired illumination as indicated or as directed by Architect. Secure locking fittings in place.

B. Aim and position adjustable emergency lighting unit lamps to achieve optimum illumination of egress path as required or as directed by Architect or authority having jurisdiction.

C. Exit Signs with Field-Selectable Directional Arrows: Set as indicated or as required to properly designate egress path as directed by Architect or authority having jurisdiction.

D. Aim and adjust luminaires as indicated.

E. Position exit sign directional arrows as indicated.

3.06 CLEANING

A. Clean surfaces according to NECA 500 (commercial lighting), NECA 502 (industrial lighting), and manufacturer's instructions to remove dirt, fingerprints, paint, or other foreign material and restore finishes to match original factory finish.

B. Clean electrical parts to remove conductive and deleterious materials.

C. Remove dirt and debris from enclosures.

D. Clean photometric control surfaces as recommended by manufacturer.

E. Clean finishes and touch up damage.

3.07 CLOSEOUT ACTIVITIES

A. Just prior to Substantial Completion, replace all lamps that have failed.

3.08 PROTECTION

A. Protect installed luminaires from subsequent construction operations.

3.09 PROTECTION

A. Relamp luminaires that have failed lamps at Substantial Completion.

3.10 SCHEDULE - Attached

END OF SECTION

SECTION 26 56 00

EXTERIOR LIGHTING

PART 1 GENERAL

1.01 SECTION INCLUDES

A. Exterior luminaires.

B. Ballasts.

C. Lamps.

D. Poles and accessories.

E. Luminaire accessories.

1.02 RELATED REQUIREMENTS

A. Section 03 30 00 - Cast-in-Place Concrete: Materials and installation requirements for concrete bases for poles.

B. Section 26 05 26 - Grounding and Bonding for Electrical Systems.

C. Section 26 05 37 - Boxes.

1.03 REFERENCE STANDARDS

A. AASHTO LTS - Standard Specifications for Structural Supports for Highway Signs, Luminaires and Traffic Signals; American Association of State Highway and Transportation Officials.

B. ANSI O5.1 - American National Standard for Wood Poles -- Specifications and Dimensions.

C. IESNA LM-63 - ANSI Approved Standard File Format for Electronic Transfer of Photometric Data and Related Information.

D. IESNA LM-64 - Photometric Measurements of Parking Areas.

E. NECA 1 - Standard for Good Workmanship in Electrical Construction; National Electrical Contractors Association.

F. NECA/IESNA 501 - Recommended Practice for Installing Exterior Lighting Systems.

G. NFPA 70 - National Electrical Code; National Fire Protection Association.

H. UL 1598 - Luminaires.

I. UL 8750 - Light Emitting Diode (LED) Equipment for Use in Lighting Products.

1.04 ADMINISTRATIVE REQUIREMENTS

A. Coordination:
   1. Coordinate placement of poles and associated foundations with utilities, curbs, sidewalks, trees, walls, fences, striping, etc. installed under other sections or by others. Coordinate elevation to obtain specified foundation height.
   2. Notify Architect of any conflicts or deviations from the contract documents to obtain direction prior to proceeding with work.

1.05 SUBMITTALS

A. See Section 01 30 00 - Administrative Requirements, for submittal procedures.

B. Shop Drawings:
   1. Indicate dimensions and components for each luminaire that is not a standard product of the manufacturer.
   2. Provide photometric calculations where luminaires are proposed for substitution .

C. Product Data: Provide manufacturer's standard catalog pages and data sheets including detailed information on luminaire construction, dimensions, ratings, finishes, mounting requirements, listings, service conditions, photometric performance, weight, effective projected area (EPA), and installed accessories; include model number nomenclature clearly marked with all proposed features.
   1. Provide electronic files of photometric data certified by a National Voluntary Laboratory Accreditation Program (NVLAP) lab or independent testing agency in IESNA LM-63 standard format upon request.
   2. Lamps: Include rated life and initial and mean lumen output.
   3. Poles: Include information on maximum supported effective projected area (EPA) and weight for the design wind speed.

D. Certificates for Poles and Accessories: Manufacturer's documentation that products are suitable for the luminaires to be installed and comply with designated structural design criteria.

E. Manufacturer's Installation Instructions: Indicate application conditions and limitations of use stipulated by product testing agency. Include instructions for storage, handling, protection, examination, preparation, installation, and starting of product.

F. Operation and Maintenance Data: Instructions for each product including information on replacement parts.

G. Maintenance Materials: Furnish the following for Red Clay Consolidated School District's use in maintenance of project.
   1. See Section 01 60 00 - Product Requirements, for additional provisions.

H. Project Record Documents: Record actual connections and locations of pole foundations, luminaires, and any pull or junction boxes.

1.06 QUALITY ASSURANCE

A. Conform to requirements of NFPA 70.

B. Manufacturer Qualifications: Company specializing in manufacturing the products specified in this section with minimum three years documented experience.

1.07 DELIVERY, STORAGE, AND HANDLING

A. Receive, handle, and store products according to NECA/IESNA 501 and manufacturer's written instructions.

B. Keep products in original manufacturer's packaging and protect from damage until ready for installation.

C. Receive, handle, and store wood poles in accordance with ANSI O5.1.

PART 2 PRODUCTS

2.01 MANUFACTURERS

A. Acuity Brands, Inc; : www.acuitybrands.com.

B. Hubbell Lighting, Inc; : www.hubbelllighting.com.

C. Substitutions: See Section 01 60 00 - Product Requirements.

2.02 LUMINAIRE TYPES

A. Furnish products as indicated in luminaire schedule included on the Drawings.

B. Substitutions: See Section 01 60 00 - Product Requirements.

2.03 LUMINAIRES

A. Manufacturers:
   1. Acuity Brands, Inc; : www.acuitybrands.com.
   2. Hubbell Lighting, Inc; : www.hubbelllighting.com.
   3. Substitutions: See Section 01 60 00 - Product Requirements.

B. Provide products that comply with requirements of NFPA 70.

C. Provide products that are listed and labeled as complying with UL 1598, where applicable.

D. Provide products listed and classified by Underwriters Laboratories Inc. as suitable for the purpose specified and indicated.

E. Unless otherwise indicated, provide complete luminaires including lamp(s) and all sockets, ballasts, reflectors, lenses, housings and other components required to position, energize and protect the lamp and distribute the light.

F. Unless specifically indicated to be excluded, provide all required conduit, boxes, wiring, connectors, hardware, poles, foundations, supports, trims, accessories, etc. as necessary for a complete operating system.

G. Provide products suitable to withstand normal handling, installation, and service without any damage, distortion, corrosion, fading, discoloring, etc.

H. Provide luminaires listed and labeled as suitable for wet locations unless otherwise indicated.

I. LED Luminaires: Listed and labeled as complying with UL 8750.

J. Exposed Hardware: Stainless steel.

2.04 BALLASTS

A. Manufacturers:
   1. General Electric Company/GE Lighting; : www.gelighting.com.
   2. Osram Sylvania; : www.sylvania.com.
   3. Philips Lighting Electronics/Advance; : www.advance.philips.com.
   4. Substitutions: See Section 01 60 00 - Product Requirements.

B. All Ballasts:
   1. Provide ballasts containing no polychlorinated biphenyls (PCBs).
   2. Minimum Efficiency/Efficacy: Provide ballasts complying with all current applicable federal and state ballast efficiency/efficacy standards.

2.05 LAMPS

A. Manufacturers:
   1. General Electric Company/GE Lighting; : www.gelighting.com.
   2. Osram Sylvania; : www.sylvania.com.
   3. Philips Lighting Company; : www.lighting.philips.com.

4. Substitutions: See Section 01 60 00 - Product Requirements.

B. All Lamps:
1. Unless explicitly excluded, provide new, compatible, operable lamps in each luminaire.
2. Verify compatibility of specified lamps with luminaires to be installed. Where lamps are not specified, provide lamps per luminaire manufacturer's recommendations.
3. Minimum Efficiency: Provide lamps complying with all current applicable federal and state lamp efficiency standards.
4. Color Temperature Consistency: Unless otherwise indicated, for each type of lamp furnish products which are consistent in perceived color temperature. Replace lamps that are determined by the Architect to be inconsistent in perceived color temperature.

2.06 POLES

A. Manufacturers:
1. Acuity Brands, Inc; : www.acuitybrands.com.
2. Hubbell Lighting, Inc; : www.hubbelllighting.com.
3. Substitutions: See Section 01 60 00 - Product Requirements.

B. All Poles:
1. Provide poles and associated support components suitable for the luminaire(s) and associated supports and accessories to be installed.
2. Structural Design Criteria:
   a. Comply with AASHTO LTS.
   b. Wind Load: Include effective projected area (EPA) of luminaire(s) and associated supports and accessories to be installed.
      1) Design Wind Speed: 100 miles per hour, with gust factor of 1.3.
3. Material: Steel, unless otherwise indicated.
4. Shape: Square straight, unless otherwise indicated.
5. Finish: Match luminaire finish, unless otherwise indicated.
6. Unless otherwise indicated, provide with the following features/accessories:
   a. Top cap.
   b. Handhole.
   c. Anchor bolts with leveling nuts or leveling shims.
   d. Anchor base cover.
   e. Pole-top tenon, size as required for installed luminaire or bracket.

C. Metal Poles: Provide ground lug, accessible from handhole or transformer base.

2.07 ACCESSORIES

PART 3 EXECUTION

3.01 EXAMINATION

A. Verify that field measurements are as shown on the drawings.

B. Verify that outlet boxes are installed in proper locations and at proper mounting heights and are properly sized to accommodate conductors in accordance with NFPA 70.

C. Verify that suitable support frames are installed where required.

D. Verify that branch circuit wiring installation is completed, tested, and ready for connection to luminaires.

E. Verify that conditions are satisfactory for installation prior to starting work.

3.02 PREPARATION

A. Provide extension rings to bring outlet boxes flush with finished surface.

B. Clean dirt, debris, plaster, and other foreign materials from outlet boxes.

3.03 INSTALLATION

A. Coordinate locations of outlet boxes provided under Section 26 05 37 as required for installation of luminaires provided under this section.

B. Install products according to manufacturer's instructions.

C. Install luminaires securely, in a neat and workmanlike manner, as specified in NECA 1 (general workmanship) and NECA/IESNA 501 (exterior lighting).

D. Install luminaires plumb and square and aligned with building lines and with adjacent luminaires.

E. Install accessories furnished with each luminaire.

F. Bond products and metal accessories to branch circuit equipment grounding conductor.

G. Install lamps in each luminaire.

3.04 FIELD QUALITY CONTROL

A. See Section 01 40 00 - Quality Requirements, for additional requirements.

B. Inspect each product for damage and defects.

C. Operate each luminaire after installation and connection to verify proper operation.

D. Correct wiring deficiencies and repair or replace damaged or defective products. Repair or replace excessively noisy ballasts as determined by Architect.

3.05 ADJUSTING

A. Aim and position adjustable luminaires to achieve desired illumination as indicated or as directed by Architect. Secure locking fittings in place.

3.06 CLEANING

A. Clean surfaces according to NECA/IESNA 501 and manufacturer's instructions to remove dirt, fingerprints, paint, or other foreign material and restore finishes to match original factory finish.

3.07 CLOSEOUT ACTIVITIES

A. See Section 01 78 00 - Closeout Submittals, for closeout submittals.

B. See Section 01 79 00 - Demonstration and Training, for additional requirements.

3.08 PROTECTION

A. Protect installed luminaires from subsequent construction operations.

END OF SECTION

SECTION 27 10 00

STRUCTURED CABLING

Table of Contents

PART 1 Scope....2
PART 2 Process....2
PART 3 Executive Summary....2
PART 4 Objective....3
PART 5 Credits....3
PART 6 Introduction....3
PART 7 Procedures....6
PART 8 Horizontal Distribution System....6
PART 9 Communications/Data Rooms/Closets (General)....9
PART 10 MDF & IDF Product Specifications....17
PART 11 Information Outlets....24
PART 12 Cable Routing Systems....27
PART 13 Cabling-General....28
PART 14 Horizontal CABLING - Category 6 UTP Data....29
PART 15 Vertical Distribution Systems....31
PART 16 Campus Cabling....34
PART 17 Patch Cables....35
PART 18 Fire Stop - Penetration Sealant....37
PART 19 Testing....38
PART 20 Appendix A – Communications Planning Checklist....42
PART 21 Appendix B - Cable Installation Checklist....43
PART 22 Appendix C - Quality Assurance....44
PART 23 Appendix D - Codes, Regulations and Standards....44
PART 24 Appendix E - Warranty....44
PART 25 Appendix f - Bid/Quote Response Format....44
PART 26 Appendix g —Certified Contractor List....44

These standards are adopted by the Department of Technology and Information (DTI), through the Technology and Architecture Standards Committee (TASC), and are applicable to all Information Technology use throughout the State of Delaware. Any questions or comments should be directed to dti_tasc@state.de.us.

PART 1 SCOPE

A. Areas Covered: This specification covers the practices and installation requirements for Voice, Data, CATV cabling and support structures including conduits and raceways, Voice and Data rooms and closets. With respect to all of the above mentioned items covered in this document, this document shall be considered the specification that shall be followed. If it appears to contradict any other part(s) of the bidding/construction documents the most stringent requirements shall be adhered to unless otherwise authorized by the Architect/Engineer in writing.

B. Environments: This specification applies to all State owned and leased building and office spaces. It is concerned with all Data, Voice and CATV cabling projects, whether they are for new construction or revisions additions and upgrades to existing systems.

PART 2 PROCESS

A. Adoption: These specifications have been adopted by the Department of Technology and Information (DTI) through the Technology and Architecture Standards Committee (TASC) and are applicable to all Information Technology use throughout the State of Delaware.

B. Contractors: Contractors or other third parties are required to comply with these specifications when proposing technology solutions to DTI or other State entities. Failure to do so could result in rejection by the Delaware Technology Investment Council. For further guidance, or to seek review of a component that is not rated below, contact the TASC at dti_tasc@state.de.us.

C. Contact us: Any questions or comments should be directed to dti_tasc@state.de.us.

PART 3 EXECUTIVE SUMMARY

Because of ever-advancing industry standards and new alliances between cable and hardware manufactures and vendors this document is issued to enhance and clarify the State of Delaware's wiring and cabling standards and specifications for structured cabling systems. Approved contractors under State of Delaware Contract # 05-441-TL are required to adhere to these specifications and standards.

The structured cabling system will support voice, data, and imaging applications within State owned and leased public school facilities. This document describes the structured cabling system requirements to be met in the proposals for communications cabling by vendors and contractors. These requirements encompass all materials, design, engineering, installation, supervision, and training services for a structured cabling system.

The following are approved manufacturers of the structured cabling systems that can be bid for new construction and whole building renovations where all building structured cabling wiring is replaced.

- Hubbell Premise Wiring
- Ortronics
- Panduit
- Systimax

A. Terms and Conditions of Bids/quotes

1. An approved Contractors bid should be based on the materials, systems, equipment, Standards and Specifications described in this document and in the bid response format of the attached example. Refer to Appendix G. All bids must be submitted in accordance with the specifications and information contained herein, as well as with any addenda, if required.
2. The bid package shall be accompanied by a presale warranty commitment, binding the Installation Contractor and Manufacturer to the customer-selected extended warranty package as described in State Contract # 05-441-TL page 21 section 3) paragraph b).
3. At any point in time, should you require clarification or have any questions pertaining to the content of this document, please call The State of Delaware Department of Technology and Information (DTI). 302-739-9500

PART 4 OBJECTIVE

To maximize the usefulness of this document, access to the various TIA/EIA (Telecommunications Industry Association/Electronic Industries Alliance), IEEE (Institute of Electrical and Electronics Engineers), BISCI, (Building Industry Consulting Service International), NEC (National Electrical Code), NFPA (National Fire Protection Association) Communications Standards, and implementation and installation Manuals for further reference is required. This document assumes that users have communications knowledge and training in all aspects of design, implementation, installation, and testing of a Voice/Data communications system.

This document does not address safety issues associated with use. It is the individual contractors' responsibility to use established and appropriate safety and health practices and to determine the applicability of all regulations.

PART 5 CREDITS

Communications Cabling Construction
Developed by:
State of Delaware Department of Technology & Information
801 Silver Lake Blvd. Dover, DE
19904

The content of this document is drawn from experience, as well as other documents and manuals, including the following:

- NEC 2011 Code book
- NFPA-70 Publications
- TIA/EIA Communications Building Wiring Standards
- IEEE Publications & Standards
- BICSI Communications Distribution Design and Installation Publications
- MOTOROLA R56 Standards and Guideline for Communications
- Various Manufactures Publications and Requirements

PART 6 INTRODUCTION

The Structured Universal Cabling System installed for the Delaware Center for Educational Technology (DCET) of the State of Delaware is designed to meet known and anticipated technology needs within the school system. An advanced building cabling system provides for more than communication services; it provides an infrastructure for an institution's entire communications network. Instead of being a basic utility, it is as important as the high-tech systems that transmit signals over it and is an integral component of the State's overall information network.

These designs provide a universal and flexible cabling system for workstations, conference rooms, and

These standards are adopted by the Department of Technology and Information (DTI), through the Technology and Architecture Standards Committee (TASC), and are applicable to all Information Technology use throughout the State of Delaware. Any questions or comments should be directed to dti_tasc@state.de.us.

laboratories. Today's cabling system must be multi- functional and provide service for telephones, computers, fax machines, LANs, WANs, broad band fiber optic and coaxial systems (CATV, SATV, CCTV.), Data Centers, computer-aided design workstations, Audio Video systems (AV), and other technologies. For a cabling system to be capable of meeting today's technology and institutional demands, it must have high bandwidth capacity and transmission speed while being extremely flexible.

This wiring architecture incorporates the applicable ANSI/EIA/TIA standards, BICSI guidelines and the latest technologies. This cabling distribution plan can integrate all types of systems from a variety of vendors. The design uses a subsystem approach, which allows for changes in the system without affecting other parts of the system. The Main Distribution Frame (MDF) and Intermediate Distribution Frame (IDF) Room equipment racks are designed to allow for growth, and the cable routing is accomplished through the provision of cable trays, conduits, sleeves, raceways, and cable hangers where required. Ease of administration and recordkeeping for moves and changes is readily apparent, as is the flexibility that a structured cabling system provides.

The wiring medium for the Communications Cable Network consists of Category 6 24AWG Unshielded Twisted Pair (UTP) for station cabling and multi pair twisted copper for backbone cabling to support low-speed voice or Data, Category 6 for high speed LAN technologies, and 62.5/125 micron multi-mode fiber optic cable and 50/125 micron multi-mode for even higher bandwidth requirements. The unshielded twisted pair (UTP) Category 6 LAN cables can support Data transmission rates of 100, 250 and 500 Mb/Sec respectively according to EIA/TIA Standards and manufacturers' specifications. These leading edge components, combined with the open wiring architecture, provide the technology, flexibility, and modularity that allow the system to grow and change to meet changing needs.

The central distribution location of the system is the Fiber Optic, coaxial and Copper Main Distribution Frame (MDF) located within the centrally located MDF/IDF Room of each building. Various fiber optic, coaxial and copper riser cables terminate on the MDF and extend to the Communications Rooms/Closets (IDFs) located throughout the buildings. Each building typically has one MDF/IDF Room and a varying number of IDF rooms/closets dictated by the horizontal station cabling limitation of 100 meters for high performance cable. The distance from the information outlet to the termination within the IDF is limited to 90 meters (the permanent link). The IDF room/closet houses the Intermediate Distribution Frame (IDF), Copper and Fiber Optic IDF Patch Panels, Local Area Network (LAN) equipment, and other electronics. Both the riser cables and the horizontal station cables feeding the floor's workstations information outlets terminate in the IDF on Data patch panels, Voice 110 hardware, and Fiber Optic Patch Panels. These termination points act as the cross-connect point between the MDF and the floor that is being served. Large floors are divided into zones, via an imaginary line, with each zone being served by its respective IDF room/closet. (See figure 1)

Each work area and workstation is served by an information outlet, which provides the jacks for plugging in telephones, computers, broad band coaxial systems, fax machines, modems, and other devices at the desktop. The information outlets are served by varying sets of cables consisting of fiber optic and copper technologies, which originate in the IDF Room. IDF outlets are typically displayed as varying types of triangles (shaded, half-shaded, etc.) on project drawings. (See figure 2)

A subsystem architectural approach, using the latest technologies, provides a comfortable level of assurance that the system will support new applications and industry standards as they emerge.

FIGURE 1 – Example only

These standards are adopted by the Department of Technology and Information (DTI), through the Technology and Architecture Standards Committee (TASC), and are applicable to all Information Technology use throughout the State of Delaware. Any questions or comments should be directed to dti_tasc@state.de.us.

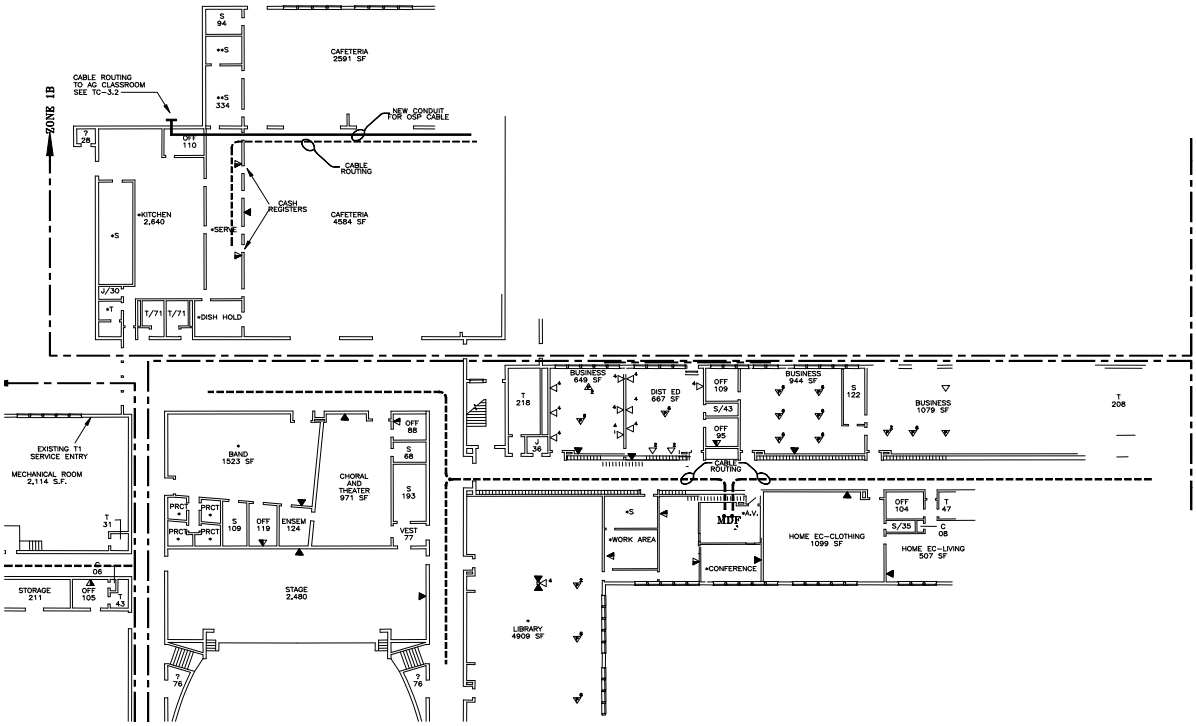

FIGURE 2 - Example Only

These standards are adopted by the Department of Technology and Information (DTI), through the Technology and Architecture Standards Committee (TASC), and are applicable to all Information Technology use throughout the State of Delaware. Any questions or comments should be directed to dti_tasc@state.de.us.

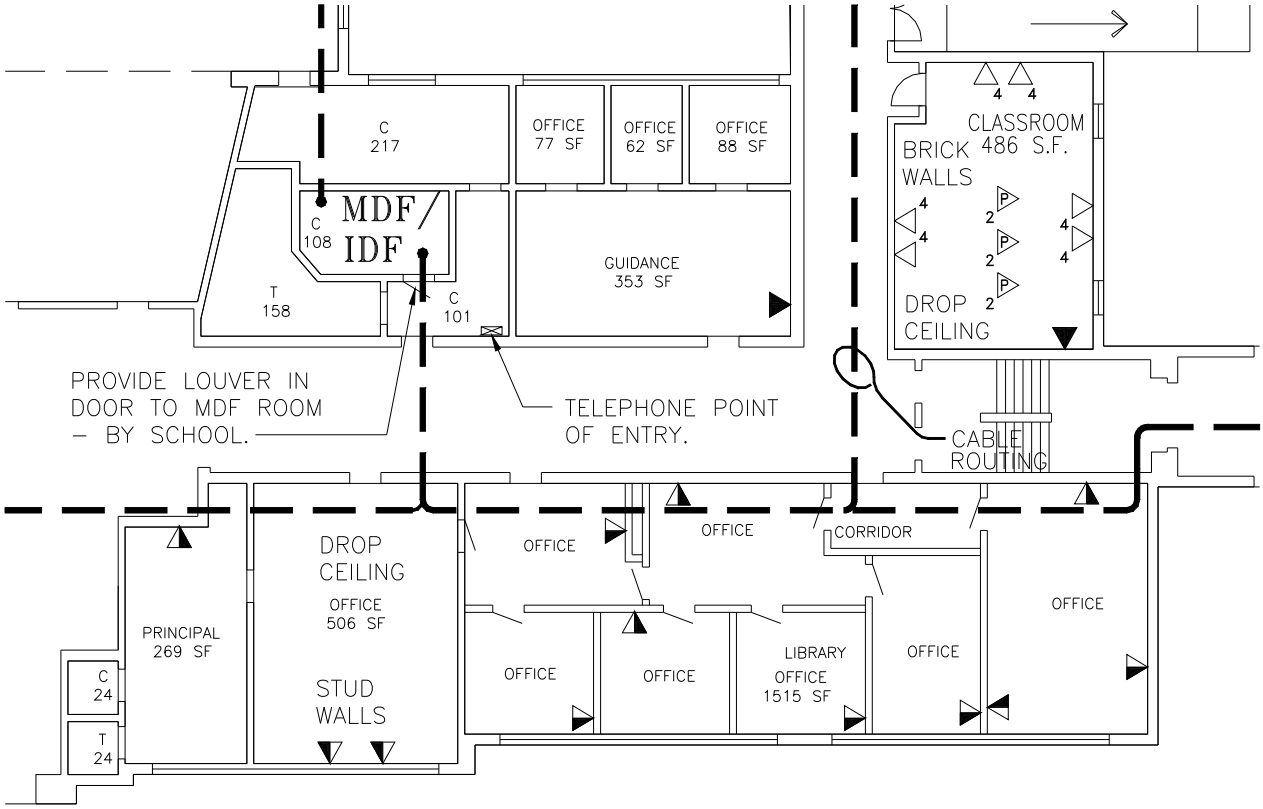

PART 7 PROCEDURES

Not used.

PART 8 HORIZONTAL DISTRIBUTION SYSTEM

The horizontal structured cable plant is the portion of the communications wiring system that extends from the information outlet to the Communications/Data room/closet.

A. Horizontal Distribution System General

1. The horizontal distribution system includes the:
   - Information outlet at the workstation
   - Cables connecting the workstation to the Communications/Data room/closet
   - Intermediate routing and distribution systems
2. The horizontal distribution system shall be configured in a star topology. All communications outlets within a work area shall be connected to a single Communications/Data room/closet, as defined by the zone concept.
3. This infrastructure must serve all of the Communications requirements of the Owner.
4. Communications applications served by the horizontal system shall include:

These standards are adopted by the Department of Technology and Information (DTI), through the Technology and Architecture Standards Committee (TASC), and are applicable to all Information Technology use throughout the State of Delaware. Any questions or comments should be directed to dti_tasc@state.de.us.

- Voice (e.g., telephones)
- Data (e.g., terminal connectivity, etc.)
- Local area networks (e.g. Ethernet)
- Audio & Video (e.g., CATV and video conferencing)
- Graphics & Imaging

5. All Horizontal Workstation Communications and broad band coaxial system cabling shall be "home-run" from the information outlet location to the termination point within the corresponding IDF or MDF/IDF room.

6. Horizontal cable paths will be in a "streets and avenues" manner, typically following main walkways.

7. Horizontal cables are to be fastened onto hangers five feet apart with all cables bundled with tie wraps, and are to have a small amount of slack visible.

8. Cables shall not rest on any structures or the hung ceiling. Cables shall not to be fastened to ducts, pipes, conduits, or any other structures. Cable bundles shall be secured to the slab overhead to avoid any conflict with or EMI from flexible electrical conduits, transformers, motors, etc.

9. Cabling shall be run to workstation and other outlets through cavities in the dry wall and openings in sheet metal or wooden studs within the dry wall construction. The sheet metal studs will not have gaskets for this purpose, so it is the Contractor's responsibility to exercise extreme care in snaking cable through these areas, so as to avoid damage to the cable jacketing.

10. The building's horizontal wiring plan is to be installed on all floors from the information outlet to the termination point within the associated IDF/MDF Room.

11. Horizontal cable will be installed onto “J” hooks or equivalent in the ceiling or tops of walls near ceiling. Cables are to be fastened to “J” hooks or equivalent every 5 feet. The cable contractor is to provide and furnish the “J” hooks.

12. All cabling provided for this project under this specification and associated drawings shall be plenum-rated.

13. Outside of the MDF/IDF and IDFs, all cabling is to be run within walls and above ceilings in a concealed fashion. In rare instances where cabling cannot be run in a concealed fashion, it shall be run in appropriately sized EMT conduit in as inconspicuous a manner as possible and or where directed on drawings. All outlets shall be provided with recessed, rigid metal boxes when installed within ceilings and walls. In cases where exposed EMT is used, the rigid metal boxes shall be surface mounted. In the case of cabling to be run in CMU walls, it shall be run in appropriately sized EMT within the CMU walls.

B. Horizontal Communications Cable Specification

1. For each type of information outlet indicated on the drawings attached to the work order, the contractor shall furnish, install, and test all of the following equipment.

2. All Category 6 cabling is to be handled and terminated in accordance with the Manufacturer’s Premises Communications Application Bulletin titled “High Performance UTP Installation Guide.”

3. All Fiber Optic Cabling is to be handled and terminated in accordance with the Manufacturer’s Application Bulletin titled “Premise Wiring Fiber Optic Cable Installation Guidelines.”

These standards are adopted by the Department of Technology and Information (DTI), through the Technology and Architecture Standards Committee (TASC), and are applicable to all Information Technology use throughout the State of Delaware. Any questions or comments should be directed to dti_tasc@state.de.us.

4. In addition to the above manufacturer's standards, all applicable EIA/TIA Category 6 and Fiber Optic Cable standards are to be strictly adhered to.

5. The fiber optic cable is to be connectorized on both ends with an SC type connector.

6. The contractor is to use Plenum cable for all station four-pair copper, coaxial, and two-strand fiber cabling. Plan routes to ensure that the proposed route on the plans falls within the EIA/TIA distance limitations (90 meters after termination) for horizontal cabling.

7. Contractor will provide all raceway fittings to allow for level and plumb routes from ceiling to information outlet. Proper fill ratios must be observed. Contractor may reference the manufacturer's catalogs or specifications for correct fittings and fill ratios. Contractor must use all accessory fittings required in order to build a neat and functional installation. This same method will apply to routing horizontal cables to classroom outlets where ceilings are not accessible.

C. Termination of Coaxial Cables

The RG-6U Plenum Cable and the RG11U Plenum Cable is to be terminated with F type connector or connectors.

D. Horizontal IDF Station Cable Terminations For Classrooms and Offices

1. The IDF Room side of the Category 6 four pair cables serving voice jacks will be punched down on the corresponding IDF Room wall-mounted frame on 110 Cat 6 field terminated 300-pair cross-connect terminal blocks.

2. The IDF Room side of the Category 6 four-pair cables serving data jacks will be punched down on individual 110 (Category 6) 24 and 48 Port RJ45 modular patch panels, 568B wired. The CAT 6 patch panels will be mounted in the relay racks within the IDF rooms.

3. In locations that have wall-mounted racks, the contractor is to use the Cat 6 "hinged down" patch panels with associated cable management. In cases where the "hinged down" series is required, the contractor is to take care to dress the cables neatly and allow for future access to the rear of the panel.

4. The drawings indicate which patch panel is to be used at each location.

5. The RG6U Coaxial Station cable serving coaxial jacks will be terminated onto a wall mounted "F" Connector Patch Panel located in the IDF/MDF Rooms.

6. The IDF Room side of the two-strand Fiber Optic cables serving fiber optic jacks shall be terminated on Fiber Optic Patch Panels as shown in the drawings.

7. The Contractor will provide Fiber patch panels and mount them in relay racks within the IDF rooms as indicated on the drawings.

8. The contractor is to provide wire management panels where and as shown on the drawings. The drawings indicate which patch panel is to be used at each location. Contractor is to label both the front and the rear of the patch panels. The terminations are to follow this sequence: Workstation Room#-Outlet#. Example (B101-01, B101-02, B101-03, B102-01, B102-02, etc.)

These standards are adopted by the Department of Technology and Information (DTI), through the Technology and Architecture Standards Committee (TASC), and are applicable to all Information Technology use throughout the State of Delaware. Any questions or comments should be directed to dti_tasc@state.de.us.

E. Zones

1. A zone is a contiguous area in which all horizontal wiring is homed to a single communications closet.
2. To maintain an orderly, understandable wiring system, it is imperative that the horizontal distribution system be structured in zones.
3. Within a zone, all communications wiring is run to a single communications closet.
4. Other zones use different Communications/Data rooms/closets. Cross-zone horizontal wiring is prohibited. Connections between zones are provided via the vertical distribution system.

PART 9 COMMUNICATIONS/DATA ROOMS/CLOSETS (GENERAL)

The Communications/Data room/closet is a concentration point for communications and LAN services. In this room, premise wiring and cabling are terminated and cross-connected. In addition, active networking devices such as LAN hubs or switches are placed here. Communications/Data rooms/closets provide a safe area for housing distribution cabling, premise equipment, and termination fields. These rooms/closets are a focal point for communications services.

In addition to supporting in-house connectivity, the MDF Communications/Data room/closet often provides a termination point for the local telephone company. The entrance facility, or demarcation point (de-mark), is the location where outside communications services, such as copper telephone lines, fiber optic Data circuits, and CATV, are delivered to the building. Typically, distribution of communications services within the building originates at this point.

The following section details the basic requirements for a Communications/Data rooms/closets.

A. Design Guidelines

Not Used

B. General Room Requirements

1. Grounding

- Most Communications and Data equipment requires bounding and grounding of equipment cabinets. Do not use plumbing or conduit (EMT) fixtures as a ground source. Grounding shall meet the NEC and EIA/TIA requirements and practices except where other authorities or codes impose more stringent requirements or practices. (Refer to NEC Chapter 2 article 250 and Chapter 8 Communications Systems, TIA/EIA Standard J-STD-607-A and Motorola R56 Standards and Guideline for Communication site).

- In addition to protecting personnel and equipment from hazardous voltages, the grounding system may reduce the effect of electromagnetic interference (EMI) throughout the structured cable plant. Improper grounding can result in induced currents that disrupt Communications circuits.

- Ensure that the installation conforms with applicable regulations and practices
- Ensure that each Communications/Data room/closet has an appropriate ground buss bar
- Ensure that grounding is available for cross-connect frames, patch panel racks, Telephone and Data equipment, as well as testing and maintenance equipment

2. Space

- A distance of three feet is the preferred clearance from the front, back, and side of a relay rack.
- If there are space constraints, it is acceptable to provide a minimum of two feet of clearance on one rack side for access and a minimum of two feet of front and back clearance for cross-connect fields, patch panels, etc. If possible, locate sleeves, cores, slots, and/or conduits together in one area to maximize usable wall space.

These standards are adopted by the Department of Technology and Information (DTI), through the Technology and Architecture Standards Committee (TASC), and are applicable to all Information Technology use throughout the State of Delaware. Any questions or comments should be directed to dti_tasc@state.de.us.

3. Rooms/Closets Sizing
- Not used

4. Structural Walls
- Extend from the floor to the deck above (fire wall)
- Be securely fastened to the floor and the deck above
- Conform to national and local construction guidelines

5. Wall Linings
- Each Communications/Data room/closet will contain a minimum of one furred-out or flush sheet of plywood (4' X 8') mounted on the wall. Refer to drawings for actual quantities.
- Securely fasten the plywood to wall framing members to ensure that it can support any attached equipment.
- The plywood is to be 3/4", A/C grade, and fire-retardant.
- All plywood backboards are to be mounted smooth side out and painted white at time of installation, prior to installation of equipment onto the plywood.

6. Floor Finish
- Keep dust to a minimum in Communications/Data rooms/closets.

C. MDF Requirements

An MDF Room is a specialized communications closet that may house major communications systems, such as a PBX (private branch exchange), communications processor, and routing equipment. The MDF Room is generally considered to be distinct from an IDF Room because of the complexity of the equipment it contains.

A typical Main Distribution Frame (MDF) Room is composed of a wall-mounted plywood backboard or backboards and relay racks designed for mounting termination equipment and electronics (see **Error! Reference source not found.**). Most MDFs within the building cabling system also serve as an IDF. This is accomplished by providing separate relay racks for each and delineating the wall-mounted frame's 110 blocks for Station cabling (see **Figure 3 and Figure 4**).

FIGURE 3 – Sample Layout

These standards are adopted by the Department of Technology and Information (DTI), through the Technology and Architecture Standards Committee (TASC), and are applicable to all Information Technology use throughout the State of Delaware. Any questions or comments should be directed to dti_tasc@state.de.us.

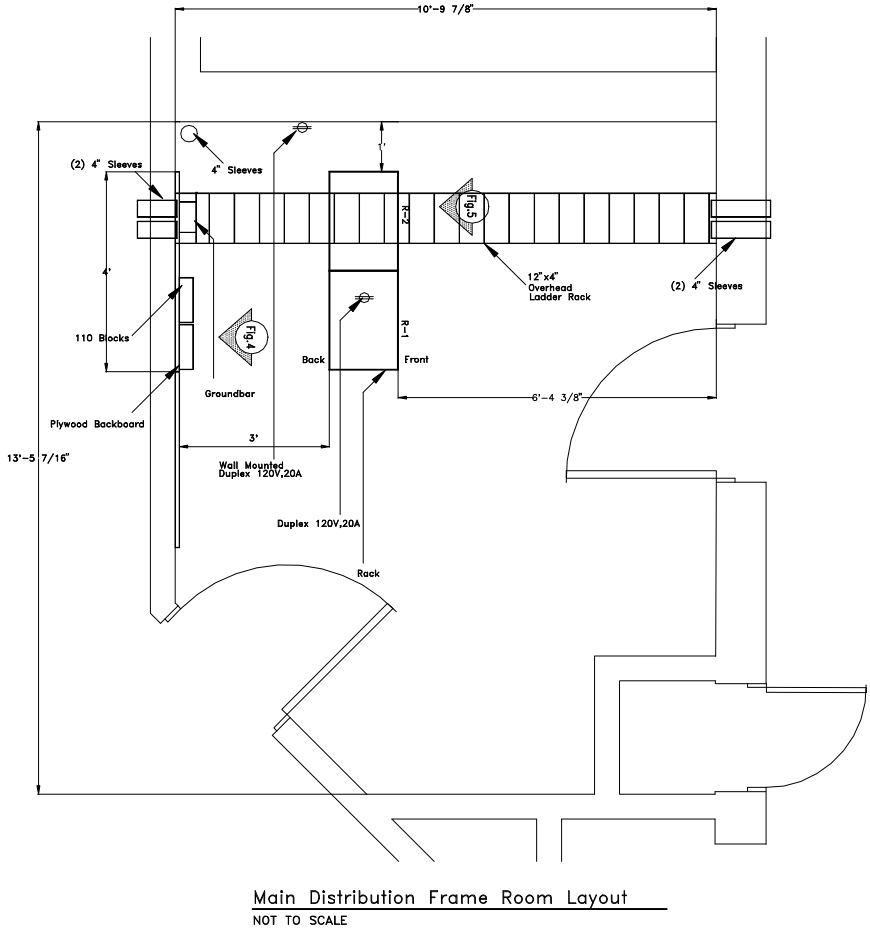

FIGURE 4 – Sample Elevation

These standards are adopted by the Department of Technology and Information (DTI), through the Technology and Architecture Standards Committee (TASC), and are applicable to all Information Technology use throughout the State of Delaware. Any questions or comments should be directed to dti_tasc@state.de.us.

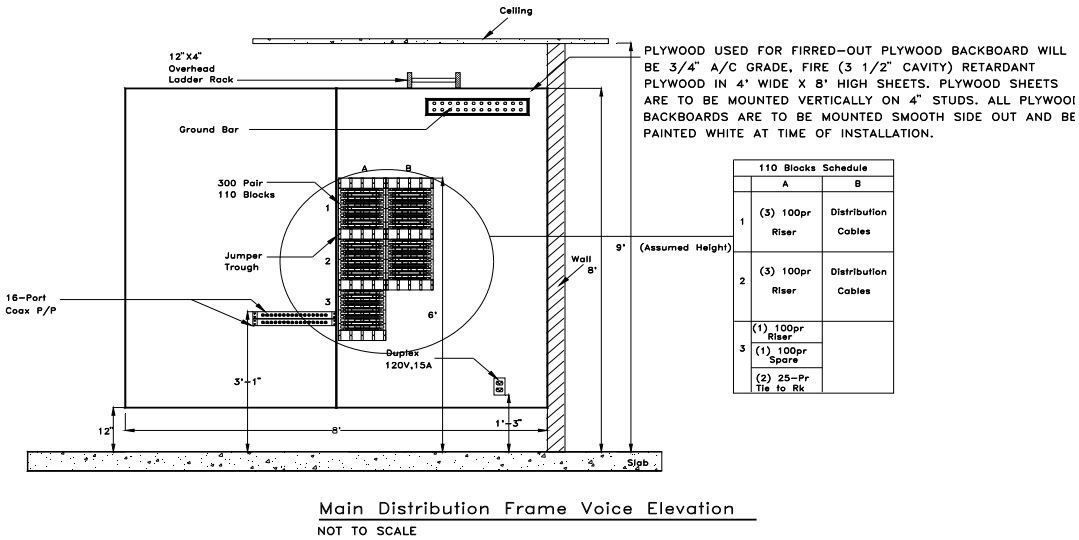

FIGURE 5 – Sample Elevation

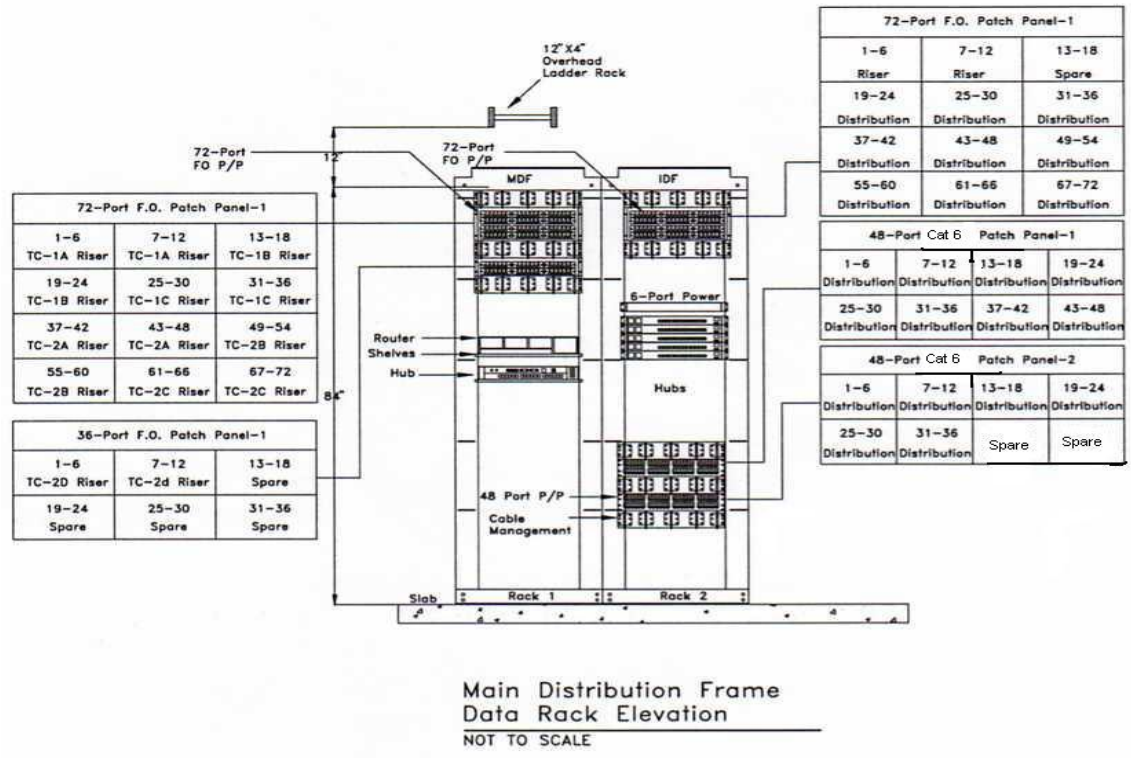

1. Local Exchange Carrier (LEC)

- Placement of Communications equipment may be influenced by vendors and service providers. For instance, the LEC (local phone company) may decide to terminate the Central Office (CO) service directly into the equipment space provided or request termination space other than that offered by the customer. If they request termination at a point other than that requested by the customer, the LEC should provide reasonable explanation.

These standards are adopted by the Department of Technology and Information (DTI), through the Technology and Architecture Standards Committee (TASC), and are applicable to all Information Technology use throughout the State of Delaware. Any questions or comments should be directed to dti_tasc@state.de.us.

- The LEC, CATV, and most service providers will require a conduit entrance in to the building to provide their service. The minimum requirements are two (2) four- inch conduits for the LEC and one (1) four-inch conduit for each other service provider, unless they specify otherwise in writing.
- It is critical that the high speed Data line (T1), TLS, and CSU/DSU be located in the MDF room. This will ensure security and simplify troubleshooting.
- The LEC may also need space for distribution systems terminations (either horizontal or vertical) and patch cable terminations.

2. Relay Racks

- The MDF will contain a minimum of one 19”W X 7’H Relay Rack onto which the fiber optic/copper patch panels and Data electronics are mounted.
- The relay racks shall have a minimum of 42 rack units of mounting space on standard 19” wide rails.
- All racks are to be grounded and bolted to each other as well as to the slab or wall.
- The rack shall have vertical and horizontal cable management to accommodate routing of patch cords as shown on the drawings.
- The rear of the rack is to face the plywood backboard and a distance of 48” is to be maintained from the foot of the relay rack.
- The side of the rack should have a minimum 6” clearance to an adjacent wall.
- The relay rack specifications and associated components shall meet the requirements of the equipment that will be installed in it.
- It shall be at a minimum 84” tall with 6” rails, with 19” equipment mounting space and vertical and horizontal wire management.

3. Data Equipment Cabinets

- Data equipment cabinets should conform to the State Data Center Standard as follows:

Cabinet size	24"Wx48"Dx72"H
Rack units	42 rack units for equipment mounting
Mounting rails	two pair 19" adjustable depth universal mounting
Mesh steel doors	single front and split rear with locking handles
Vertical cable management	trough, rings or Velcro tie downs or combination of, mountable left or right side
PDU mounting	space to mount two vertical PDU closest to equipment mountable left or right side
Side panels	removable, solid, both sides
Top	solid with cabling access opening capabilities
Bottom if required	solid with cabling access opening capabilities

- Cabinet shall have grounding, bounding and anti-tip capabilities that can be added when required.

- Approved cabinet Manufacturer: Cooper B-Line part #V422448ACXXSSSB or approved equal

4. Cable Trays

- Between the relay rack and the wall-mounted frame, a 12” cable tray (center-rail systems are not permitted), with a 4" load depth and 6" rung spacing is to be installed suspended from a ceiling support structure, mounted to the relay rack and the wall.
- Do not attach any cable tray to a suspended ceiling grid.
- An open wire basket cable tray system is acceptable for cable support.
- Approved manufacturer: Cooper B-Line part # FT4X12X10

D. IDF Room Requirements

Each IDF Rooms within a building supports all connections in single, contiguous area (zones). Cross-zone wiring is not to be installed from user workstations. Connections between zones are made through backbone wiring systems, which link the IDF Rooms to the MDF. A typical Intermediate

These standards are adopted by the Department of Technology and Information (DTI), through the Technology and Architecture Standards Committee (TASC), and are applicable to all Information Technology use throughout the State of Delaware. Any questions or comments should be directed to dti_tasc@state.de.us.

Distribution Frame (IDF) Room is composed of a wall-mounted plywood backboard and relay racks designed for mounting termination equipment and electronics.

FIGURE 6 – Sample Layout

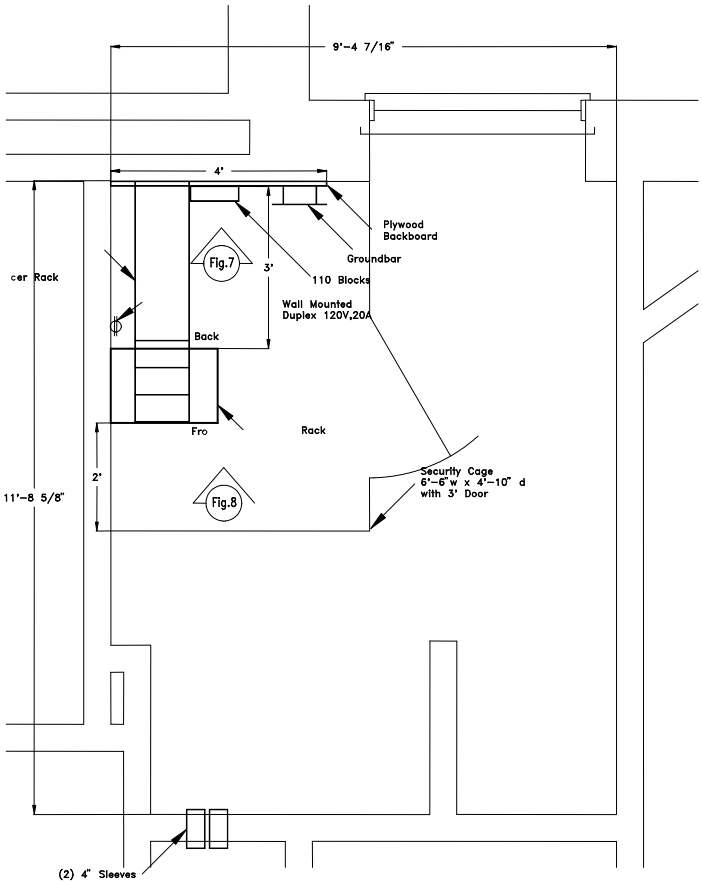

Sample IDF –TELECOMMUNICATIONS CLOSET LAYOUT
NOT TO SCALE

These standards are adopted by the Department of Technology and Information (DTI), through the Technology and Architecture Standards Committee (TASC), and are applicable to all Information Technology use throughout the State of Delaware. Any questions or comments should be directed to dti_tasc@state.de.us.

FIGURE 7 – Sample Elevation

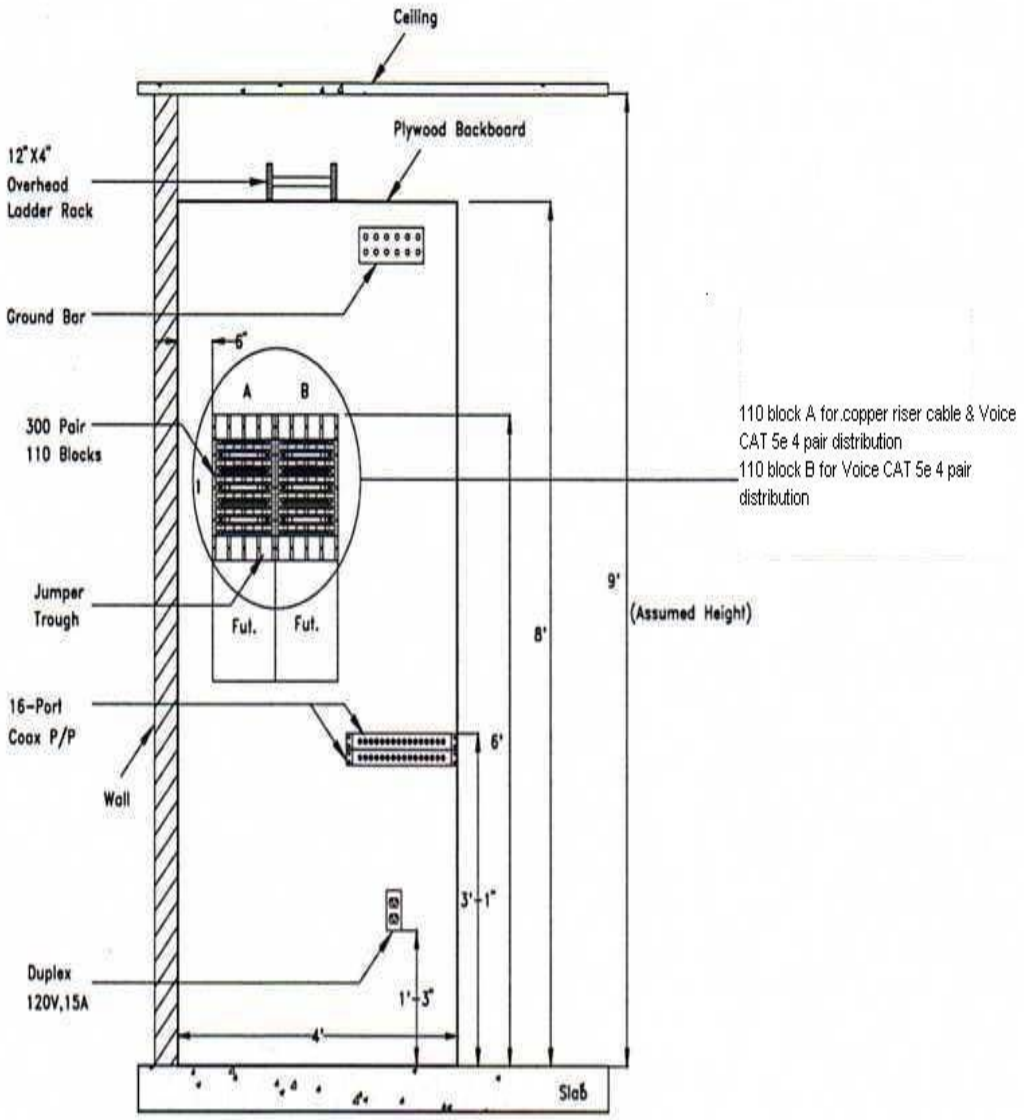

Sample IDF –Telecommunications Closet Elevation
NOT TO SCALE

These standards are adopted by the Department of Technology and Information (DTI), through the Technology and Architecture Standards Committee (TASC), and are applicable to all Information Technology use throughout the State of Delaware. Any questions or comments should be directed to dti_tasc@state.de.us.

FIGURE 8 – Sample Elevation

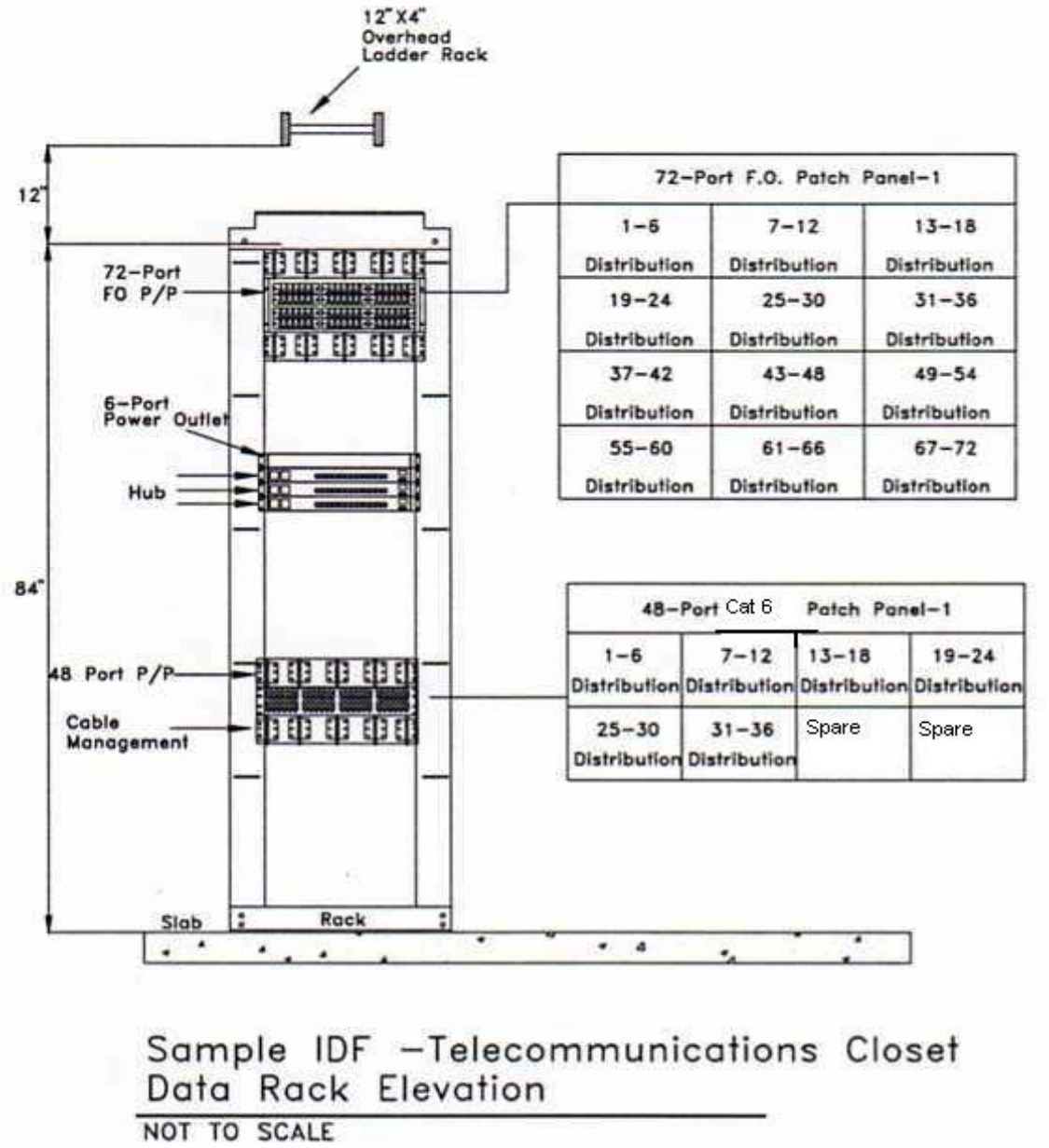

1. **Plywood Backboard**
   - Each IDF Room will contain a minimum of one 4' X 8' sheet of plywood flush- mounted on the wall.
   - Securely fasten the plywood to wall-framing members to ensure that it can support attached equipment.
   - The plywood is to be 3/4", A/C grade and fire retardant.
   - All plywood backboards are to be mounted smooth side out and painted with white fire retardant paint at time of installation and prior to installation of equipment onto the plywood.

These standards are adopted by the Department of Technology and Information (DTI), through the Technology and Architecture Standards Committee (TASC), and are applicable to all Information Technology use throughout the State of Delaware. Any questions or comments should be directed to dti_tasc@state.de.us.

2. Relay Racks

- Each MDF will contain a minimum of one 19"W X 7'H Relay Rack onto which the fiber optic/copper patch panels and Data electronics are mounted.
- The relay racks shall have a minimum of 42 rack units of mounting space on standard 19" wide rails.
- manufacturer's requirements, and space allocated.
- All racks are to be grounded and bolted to each other as well as to the slab or wall.
- The rack shall have vertical and horizontal cable management to accommodate routing of patch cords ash shown on the drawings
- The rear of the rack is to face the plywood backboard and a distance of 48" is to be maintained from the foot of the relay rack.
- The side of the rack should have a 6" clearance to an adjacent wall.
- The relay rack specifications and associated components shall meet the requirements of the equipment that will be installed in it.
- It shall be at a minimum 84" tall with 6" rails, with 19" equipment mounting space and vertical and horizontal wire management.

3. Cable Trays

- Between the relay rack and the wall-mounted frame, a 12" cable tray (no center rail systems), with a 4" load depth and 6" rung spacing is to be installed suspended from a ceiling support structure, mounted to the relay rack and the wall.
- Do not attach cable trays to the suspended ceiling grid.
- An open wire basket cable tray system is acceptable for cable support.

PART 10 MDF & IDF PRODUCT SPECIFICATIONS

- **Category 6 Patch Panels**

The default cabling infrastructure shall be Category 6 unless specified otherwise.

1. Category 6 Patch Panel Requirements

- Category 6 patch panels shall be standard 8-position, RJ-45 style, un-keyed, in 48-port configurations.
- Panel frames shall be 14-gage steel with rolled edges top and bottom for proper stiffness.
- Panel design shall incorporate plastic push-fasteners to permit hands-free positioning onto standard EIA-310-D 19" mounting rails.
- Panels shall accommodate a minimum of 24 ports for each rack mount unit (1 RMU = 1.75 in.).
- Panels shall be designed for 4-pair, 100 ohm balanced unshielded twisted pair (UTP) cable.
- Panels shall terminate 26-22 AWG solid conductors, with maximum insulation diameter of 0.050 in.
- Panels shall have attached wiring instruction labels to permit either T568A or T568B wiring configurations.
- Panels shall have individual port identification numbers on the front and rear of the panel.
- Panel adapter modules shall be 110-style termination with tin lead solder plated IDC contacts.
- Printed circuit boards shall be fully enclosed front and rear for physical protection.
- Panel contacts shall withstand a minimum of 2000 mating cycles with an FCC 8-position RJ-45 plug, without degradation of electrical or mechanical performance.
- Panel contacts shall be constructed of Beryllium copper for maximum spring force and durability.
- Contact plating shall be a minimum of 50 micro-inches of hard gold in the contact area over 50 micro-inch of nickel.
- Panel termination method shall follow the industry standard 110 IDC punch-down, using a standard 110 impact termination tool.
- Panels shall be compatible with a 4-pair multi-punch impact termination tool designed specifically for the purpose. Bending or other damage to the panel using a multi-pair punch tool shall not occur.
- IDC contact termination towers shall have tapered pair-splitting features to aid wire insertion and minimize pair un-twist.
- IDC contacts shall be Phosphor Bronze with 100 micro-inch tin lead 60/40 plating over nickel.
- Panels shall not require special cords, specialty tools or special installation requirements.
- Panel ports shall accept optional hinged dust covers and port identification icon buttons.

These standards are adopted by the Department of Technology and Information (DTI), through the Technology and Architecture Standards Committee (TASC), and are applicable to all Information Technology use throughout the State of Delaware. Any questions or comments should be directed to dti_tasc@state.de.us.

- Space above the adapter ports shall be available for additional labeling per ANSI/TIA/EIA-606-A.
- Panels shall accept a clip-on rear cable management support bar to provide cable strain relief.

2. Category 6 Patch Panel Performance Requirements

- All transmission performance parameters shall be independently verified by a UL or ETL third party testing organization.
- Category 6 panels shall meet or exceed Category 6 transmission requirements for connecting hardware, as specified in ANSI/TIA/EIA-568-B.2-1, Transmission Performance Specifications for 4-Pair 100 ohm Category 6 Cabling.
- The manufacturer shall provide Category 6 component compliance certificates from third party testing organizations upon request.
- Panels shall be UL LISTED 1863 and CSA certified.
- Panels shall exceed IEEE 802.3 DTE Power specification to 4 times the rated current limits with no degradation of performance or materials.
- Panel contacts shall withstand a minimum of 2000 mating cycles with an FCC 8-position RJ-45 plug, without degradation of electrical or mechanical performance.
- Panels shall be third party verified, error free Gigabit Ethernet performance to IEEE 802.3 standard.
- Category 6 panels shall meet the current draft 10 Gb/s performance requirements of IEEE 802.3an and TSB-155, for a maximum 55-meter channel length. Conditions of requirement No. 10 above apply.

3. Acceptable Manufacturers:

- Hubbell Premise Wiring.
  The Hubbell products listed in the table below comply with all requirements specified in this document

HUBBELL CATALOG NUMBER	Description
P6E48U	NEXTSPEED® Category 6 Patch Panel, 48-Ports
PCBLMGT	Rear Cable Management Bar

- Or approved equal of: Ortronics, Panduit, Systimax

4. Category 6 Patch Panel Installation Requirements

- Horizontal and backbone cabling of the proper category shall be fully deployed into the TR, TE, or ER according to applicable codes and standards.
- Cable slack, service loops, bend radii, and pathway fill ratio shall comply with applicable codes and standards.
- Racks, cabinets, enclosures, and metallic cable pathways shall be bonded to an approved ground according to ANSI-J-STD-607-A.
- Cable ends for termination shall be clean and free from crush marks, cuts, or kinks left from pulling operations.
- Properly mount patch panels into the designated rack, cabinet, or bracket locations with the #12-24 screws provided.
- Terminate cables into the patch panel according to manufacturer's instructions.
- To maximize transmission performance, maintain wiring pair twists as close as possible to the point of termination.
- The length of wiring pair un-twist in each termination shall be less than 0.5 inches (13 mm).
- Horizontal or backbone cables extending from the panel terminations shall maintain a minimum bend radius of at least 4 times the cable diameter.
- Cable terminations shall have no tensile or bending strain on panel IDC contacts in each installed location.
- Panels shall be properly labeled on front and back with the cable number and port connections for each port.

• Fiber Enclosures, Adapter Plates, Connectors

1. Fiber Adapter Enclosure Requirements

- Enclosure design shall be a modular, rack-mounted, powder coated formed cold rolled steel enclosure with a removable front cover, rear panel, top panel, and slide-out inner tray.

These standards are adopted by the Department of Technology and Information (DTI), through the Technology and Architecture Standards Committee (TASC), and are applicable to all Information Technology use throughout the State of Delaware. Any questions or comments should be directed to dti_tasc@state.de.us.

- Each basic unit delivered shall consist of: (1) enclosure assembly, (2) mounting brackets, (6) cable ties, (5) snap-in cable clips (4) #12-24 mounting screws, (1) adhesive grid label, (4) adhesive cable clips, (2) Velcro cable ties, (3) label holders, and (1) splice tray stud, wing nut, and spacer.
- Material shall be as follows:
  a. Enclosure, panels and tray: 16 gage cold rolled steel (CRS)
  b. Mounting brackets: 14 gage CRS
  c. Front cover: Acrylic (Plexiglas) with smoke tint
- Basic dimensions of the enclosures shall be approximately 17” wide by 12” deep.
- Enclosures shall be available in heights of 3.5” (2 RMU), 5.25” (3 RMU), and 7” (4 RMU) versions.
- Finish shall be black durable powder coat on all surfaces.
- Front door shall be smoke-tinted Lexan plastic, hinged at the bottom, with a cap-plugged hole to accept an optional lock. Front door shall also be removable in the fully open position by sliding left off the mounting pins.
- Front door shall be secured in the closed position with lever-action quick-release latches.
- Top cover shall be removable in the forward direction, without fasteners, to provide access to the connector field. Top panel shall also have knockouts for backbone cable entry.
- Rear panel shall be removable without fasteners.
- Enclosure shall be equipped with panel-mounting brackets assembled for 19” rack mounting, compliant to ANSI/EIA-310-D.
- Panel mounting brackets shall be configurable to either 19” or 23” racks.
- Enclosure chassis shall have two mounting bracket locations for either flush mount or center mount on the rack.
- Rear of enclosure shall have two knockouts, top and bottom, for backbone cable entry and internal routing.
- Front of enclosure chassis shall have side cutouts for patch cord entry into, and exit from the enclosure.
- Inner tray shall slide out in the forward direction by releasing the lever-action quick-release latches. Tabs in the chassis shall engage with slots in the inner tray in the outward position to prevent tray from falling out.
- Inner tray shall have rear-located knockouts to match rear chassis knockouts.
- Inner tray panel mounting posts shall accept modular adapter panels, in high- or low-density versions. Adapter panels shall be available in ST multimode OM4/singlemode.
- Splice tray mounting boss shall also accept a stud for mounting blown fiber adapter brackets.
- Inner tray shall have clips for cable ties, and holes to accept snap-in cable clips, front and rear, for complete cable management of patch cords and distribution cable strands.
- Inner tray shall have rear cable tie-down features to accept various diameter backbone cables entering the enclosure.

2. Fiber Adapter Panels Requirements

- Fiber adapter panels shall be a modular, quick-fastening steel plate, powder coated to match the enclosure finish.
- Fiber adapter panels shall have pre-installed LC fiber adapters, available in low- or high-density multi-mode or single-mode applications.
- Each individually bagged unit delivered shall consist of: (1) fully assembled adapter panel, with push-pull fasteners pre-installed.
- Adapter panels shall be constructed of 16 gage cold rolled steel.
- Finish shall be black durable powder coat on all surfaces.
- Basic dimensions of the FSP panels shall be 5.10” length by 1.10” wide.
- Panels shall have two pre-installed, push-pull type quick-release fasteners for quick snap-in installation. Push-pull fasteners shall have an industry standard center distance of 4.65”.
- Panels shall be suitable for mounting either vertically or horizontally.
- Panels shall be available in with LC adapters with precision ceramic alignment sleeves.
- All fiber adapters installed in FSP panels shall have dust caps installed.
- Panels shall be available in low-density and high-density adapter patterns.

3. Fiber Connector Requirements

- Connector basic design shall be a factory pre-polished LC optical fiber connector with a zirconium ceramic ferrule. Integral with the connector body is a wedge-activated fiber clamping mechanism to secure the inserted fiber into a mechanical splice with the factory installed cleaved fiber stub. Index-matching gel is

These standards are adopted by the Department of Technology and Information (DTI), through the Technology and Architecture Standards Committee (TASC), and are applicable to all Information Technology use throughout the State of Delaware. Any questions or comments should be directed to dti_tasc@state.de.us.

supplied factory-injected into the cleaved fiber stub splice to optimize transmission performance. Connector attachment is achieved without tools, by inserting a field-cleaved optical fiber and then extracting the disposable clamp wedges from the connector body.

- Each basic connector unit delivered shall consist of: (1) connector body with disposable clamp wedge, (1) strain relief boot, and (1) plastic dust cap.
- LC multimode factory pre-polished connectors shall be 50 micron laser optimized pre-installed fiber.
- Connector termination method shall utilize an industry standard multi-layer strip tool and bare fiber cleave tool as the only field tools required.
- LC connectors shall have features to enable field verification using a Visual Fault Locator (VFL) during termination.
- Connector materials shall be designed with thermal stability to comply with environmental requirements of ANSI/TIA/EIA-568-B.3 and Telcordia GR-1081-CORE.
- Multimode OM4 and singlemode pre-polished fiber connector materials shall be as follows:
  a. Ferrule: zirconium ceramic
  b. LC inner body: thermally stable injection molded thermoplastic
  c. Dust Cap: nylon or PVC
  d. Strain relief boot: UL94-V0 molded PVC
- Pre-polished LC connectors shall require no field polishing.
- Pre-polished MM LC connector body shall be industry standard aqua for 50 micron multimode OM4, laser optimized.
- colors for specific applications, as designated below:
- Pre-polished MM LC connectors shall require no adhesives for termination.
- LC connector internal fiber clamping mechanism shall firmly secure both the inserted glass fiber and the 900 micron buffer layer of the inserted fiber for maximum strain relief.
- All standard mating and interface dimensions for LC connectors shall comply with ANSI/TIA/EIA-604-10 (FOCIS 10).
- Ferrule outside diameter for LC multimode connectors shall be 1.2467mm to 1.2497mm.
- Ferrule outside diameter for LC singlemode connectors shall be 1.2483mm to 1.2497mm.
- LC ferrule tip shall have a PC spherical radius of approximately 7.0 mm radius for multimode and singlemode versions.
- Delivered connectors shall be individually bagged with the dust cap installed to protect from contamination.
- Delivered connectors shall have the disposable clamp activation wedge element pre-installed onto the connector body.
- Connector design and termination technique shall be independent of cable type or manufacturer, and shall be compatible for either 900 micron buffer or 250 micron buffer distribution cables.
- LC connector strain relief boot shall be a Telcordia style slotted design for maximum flexural strain relief.
- Strain relief boot shall be black for multimode, and yellow for singlemode.
- LC connectors shall be available individually bagged in packs of 12.
- Pre-polished LC fiber connectors, when properly installed onto qualified cable, shall meet the 10 Gb/s Ethernet performance requirements of IEEE802.3.
- Pre-polished LC fiber connectors, properly installed onto qualified cable, shall exceed the mechanical and environmental performance requirements of ANSI/TIA/EIA-568-C.3, Annex 'A'.
- Pre-polished LC fiber connectors, properly installed onto qualified cable, shall exceed the mechanical and environmental performance requirements of Telcordia GR-1081-CORE.
- Qualification test data shall be available from the manufacturer upon request.

4. Acceptable Manufacturers:

- Hubbell Premise Wiring.
  The Hubbell products listed in the table below comply with all requirements specified in this document

HUBBELL CATALOG NUMBER	Description
FCR350SP36R	Fiber Enclosure - 2U Rack Mount Fiber Enclosure, Accepts 6 Adapter Panels
FCR350SP54R	Fiber Enclosure - 2U Rack Mount Fiber Enclosure, Accepts 9 Adapter Panels
FCR525SPR	Fiber Enclosure - 3U Rack Mount Fiber Enclosure, Accepts 12 Adapter Panels
FCR700SP	Fiber Enclosure - 4U Rack Mount Fiber Enclosure, Accepts 15 Adapter Panels

These standards are adopted by the Department of Technology and Information (DTI), through the Technology and Architecture Standards Committee (TASC), and are applicable to all Information Technology use throughout the State of Delaware. Any questions or comments should be directed to dti_tasc@state.de.us.

FSPLCDM6AQ	Fiber Adapter Panel - 6 LC Duplex, Aqua for MM – Phosphor Bronze Sleeves
FSPLCQM6AQ	Fiber Adapter Panel - 6 LC Quad, Aqua for Multimode – Phosphor Bronze Sleeves
FSPLCDS6	Fiber Adapter Panel - 6 LC Duplex, Blue for SM – Zirconia Ceramic Sleeves
FSPLCQS3	Fiber Adapter Panel - 6 LC Quad Blue for SM – Zirconia Ceramic Sleeves
FCLC900K50GM12	Fiber Connector - LC, MM, 50/125um, OM3 – Aqua, Box of 12
FCLC900K50GM12	Fiber Connector - LC, SM, 9/125 UPC – Blue Box of 12

- Or approved equal of: Ortronics, Panduit, Systimax

5. Fiber Installation Requirements

- For FCR-series enclosures, remove top and rear covers, and front door.
- Punch out the desired knockouts for cable entry.
- Using proper method, pull cables into cabinet through the desired knockout entry location.
- Strip the outer sheath and sub sheaths of the fiber cable to provide at least (2) meters service loop of the individual buffered fiber strands.
- Anchor the outer cable sheath into the rear channel of the inner tray using the cable ties provided. Note: in FCR-series enclosures, leave enough slack in the main cable to allow free motion of the inner tray fully outward. Remove cable entry knockouts as required.
- Installed copper and fiber cabling shall be properly strain relieved. Cable service coil, bend radius, and pathway fill ratio shall comply with applicable codes and standards.
- Use the plastic adhesive-backed clips provided to form the fiber strands into a large service coil on the surface of the inner tray. For FCR-series enclosures, be sure the inner tray has full mobility in and out, with no cable kinks or snags.
- Close inner tray and front cover, and lock the quick-release fasteners.
- Install SC fiber adapter panels by firmly using push fasteners to lock in place.
- Leave dust caps installed in the fiber adapter plates until connector termination is performed.
- Follow manufacturer's termination instructions for pre-polished connectors as specified
- Uncoil the 900-micron buffered strands of cable from the service loop and set-up for termination.
- Un-package the connector, and leave dust cap installed. Firmly press downward on the connector wedge tab to fully seat clamp wedges.
- Slide the strain relief boot onto the fiber strand before stripping.
- Using a fiber strip tool, strip buffered fiber completely to approx. 1.0" of exposed glass fiber.
- Y CAUTION: Do not nick or scrape the glass fiber with the strip tool.
- Wipe the glass fiber firmly with an alcohol wipe. Always use 99.9% pure reagent grade alcohol for fiber cleaning.
- Mark the 900 micron buffer layer from the strip-off point per instructions.
- Insert the fiber into the cleave tool and cleave the fiber to the specified length from the end of the 900 micron buffer layer. Always keep the cleave tool clean.
- Y CAUTION: Always dispose of glass fiber waste in an approved container.
- Gently insert the cleaved fiber into the connector body. Rotate connector slightly during insertion to fully seat the fiber into the internal splice.
- Hold the seated fiber in place using slight force to form a bow in the fiber.
- Y CAUTION: Do not allow the installed fiber to slip backward.
- While holding the fiber seated, squeeze the wedge holder device to activate the clamp, and then slip the wedge holder off the connector body. Dispose the wedge holder.

- Remove the connector dust cap and inspect the ferrule tip. A 400X microscope is recommended. View of the polished fiber should be a smooth round circle with no scratches, pits, cracks or chips. Use a lint-free wipe to clean off any contamination.
- Y CAUTION: Do not view ends of live fibers, with or without a microscope.
- Plug the connector into the proper adapter panel and proceed with the next connector. Leave dust cap installed if the connector is not mated.

• Racks, Horizontal & Vertical Managers

1. Equipment Racks Requirements

These standards are adopted by the Department of Technology and Information (DTI), through the Technology and Architecture Standards Committee (TASC), and are applicable to all Information Technology use throughout the State of Delaware. Any questions or comments should be directed to dti_tasc@state.de.us.

- Racks shall be a structural aluminum construction, having two 6-inch deep rails.
- Racks shall feature universal side mounting hole pattern for vertical cable managers.
- Racks shall feature a weight load capacity of 1,000 lbs when properly secured to the floor.
- Each basic rack delivered shall consist of: (2) vertical rails, (2) base angles, (1) assembly hardware kit, (2) top angles, and (20) #12-24 dog point machine screws for panel mounting.
- Racks shall be available in either for 19-inch standard rack configurations.
- Tapped holes in the front and rear vertical rails for mounting of panels shall be #12-24 thread size. Powder coat shall not interfere with thread fit.
- Standard rack heights of 8 ft (96 in)
- Racks with heights of 8 ft shall have a capacity of 51 rack mount units
- Rack base angles shall be pre-drilled for floor mounting, and for assembly to vertical rails.

2. Horizontal Managers Requirements

- Horizontal Managers shall be 19”W, 3.5”H
- Horizontal managers shall be 16ga. Cold rolled steel construction with (6) pass thru holes, and (7) Front mounted 3.5” steel rod D-Rings.
- Horizontal managers shall have hinged Aluminum front cover to conceal patch cords.

3. Vertical Managers Requirements

- Vertical cable managers shall be 14”D, 10”W
- Vertical cable managers shall feature a steel rod construction for increased air flow.
- Vertical cable managers shall feature a solid aluminum door that is designed to open left or right and swing out of way for cable management.
- Vertical cable managers shall feature power strip mounting brackets on rear of manager.
- Vertical cable manager shall accept and include (16) 3" black cable management spools.

4. Acceptable Manufacturers:

- Hubbell Premise Wiring.
  The Hubbell products listed in the table below comply with all requirements specified in this document
- Cooper B-Line.
  The Cooper B-Line products listed in the table below comply with all requirements specified in this document

HUBBELL CATALOG NUMBER	Description
HPW84RR19D	84”H, 6”D Equipment Rack
HC219CE3N	2U Horizontal Manager w/ 3.5” Front rings and cover
XS1010	Vertical Cable Manager, 14”D, 10”W, with door & cable spools

B-Line CATALOG NUMBER	Description
SB55608419U6	84”H, 6”D Equipment Rack
SB87019S2FB	2U Horizontal Manager w/ 3.5” Front rings and cover
SB860810S084	Vertical Cable Manager, 14”D, 10”W, with door & cable spools

- Or approved equal of: Ortronics, Systimax, or Cooper B-Line as denoted on drawings

- **Category 5e-110 Termination Blocks**

1. 110 Termination Block Requirements

- Category 5e-110 wiring blocks shall be available in 50-pair, 100-pair and 300-pair capacities, with or without detachable standoff legs.
- Wiring blocks shall be available as kits that include wiring blocks, label strips, and the appropriate quantity of connecting blocks for termination to full capacity.

These standards are adopted by the Department of Technology and Information (DTI), through the Technology and Architecture Standards Committee (TASC), and are applicable to all Information Technology use throughout the State of Delaware. Any questions or comments should be directed to dti_tasc@state.de.us.

- Connecting blocks shall accommodate a 5-pair punch-down tool designed specifically for the purpose of Category 5e termination.
- Wiring blocks and connecting blocks shall be constructed of UL94-V0 rated high-impact flame-retardant polycarbonate blend thermoplastic.
- Wiring blocks shall accept 26-22 AWG solid or stranded conductors
- Wiring blocks shall accept conductor insulation diameters of .050 in to .070 in maximum.
- Wiring blocks and connecting blocks shall have a temperature rating of 14 °F to 140°F with up to 95% non-condensing humidity.
- Wiring blocks shall have through-openings to permit rear cable entry and direct routing to each point of termination.
- Connecting blocks shall connect to the wiring block with a locking force of 35 Lb minimum.
- Connecting blocks shall withstand a minimum of 200 re-terminations without degradation to electrical or mechanical performance.
- IDC contact termination towers on the connecting blocks shall have tapered pair-splitting features to aid wire insertion and minimize pair un-twist. IDC towers shall also have high-definition color-coding.

2. 110 Termination Block Performance Requirements

- A UL or ETL third party testing organization shall independently verify all Category 5e transmission performance parameters.
- Category 5e-110 termination blocks shall meet or exceed Category 5e transmission requirements for connecting hardware, as specified in ANSI/TIA/EIA-568-B.2.
- The manufacturer shall provide Category 5e component compliance certificates from third party testing organization upon request.
- 5e-110 termination blocks shall be UL LISTED 1863.
- 5e-110 termination blocks shall exceed IEEE 802.3 DTE Power specification to 4 times the rated current limits with no degradation of performance or materials.
- 5e-110 termination blocks shall be third party verified, error free Gigabit Ethernet performance to IEEE 802.3 standard.
- 5e-110 termination blocks shall meet or exceed the 4-connector channel performance requirements of Category 5e, per the ANSI/TIA/EIA-568-B.2.

3. Acceptable Manufacturers:

- Hubbell Premise Wiring.
  The Hubbell products listed in the table below comply with all requirements specified in this document

HUBBELL CATALOG NUMBER	Description
110BLK50FTK5	110 Field Termination Kit, 5e-110/50-pair with 5-Pair Conn. Blocks
110BLK100FTK5	110 Field Termination Kit, 5e-110/100-pair with 5-Pair Conn. Blocks
110BLK300FTK5	110 Field Termination Kit, 5e-110/300-pair with 5-Pair Conn. Blocks

- Or approved equal of: Ortronics, Panduit, Systimax

4. 110 Installation Requirements

- Follow manufacturer's instructions.
- Mount 5e-110 wiring blocks in the desired location.
- Route cables through the openings in the wiring block base.
- Terminate UTP cables to the 5e-110 block according to manufacturer's instructions, using the connecting blocks and proper termination tool.
- To maximize transmission performance, maintain wiring pair twists as close as possible to the point of termination.
- The length of wiring pair un-twist in each termination shall be less than 0.5 inches (13 mm).
- Cables extending from the block terminations shall maintain a minimum bend radius of at least 4 times the cable diameter.
- Cable terminations shall have no tensile or bending strain on IDC contacts after termination. Note: Use the appropriate cable management hardware to relieve cable strain and control bend radius.

These standards are adopted by the Department of Technology and Information (DTI), through the Technology and Architecture Standards Committee (TASC), and are applicable to all Information Technology use throughout the State of Delaware. Any questions or comments should be directed to dti_tasc@state.de.us.

PART 11 INFORMATION OUTLETS

Each school and District Office has a specific information outlets requirements, however, the standard specification is an information outlet providing (1) Data & (1) Voice Category 6 jack per location as a basic requirement wired to the 568B standard. See drawings for further specifications and configurations of the different types of information outlets.

A. Information Outlet Locations

1. The location of the information outlets is dependent on the environment in which the outlets will be installed. If the outlets are to be wall-mounted, the bottom of the outlet is to be located 15" above the finished floor unless otherwise shown or stated. If there is equipment or furniture that does not allow for this, such as a credenza or countertop, the outlet must be placed at a height appropriate to the situation.

   Note: The outlet box conduit stub up should be at least 1" OD minimum.

2. Locate the outlet where it is closest to the equipment and people it will serve. Keep in mind that the cord from the outlet to the device can be a trip hazard or may span across doors.

3. Wall-mounted outlets should not be located on heating units, equipment or ductwork. They are always to be located in either a gypsum, sheetrock, or masonry wall.

4.

B. Category 6 Jacks

The default cabling infrastructure shall be Category 6 for voice and data connectivity at the information outlet unless specified otherwise.

1. Category 6 Jack Requirements

- Jacks shall be standard 8-position, RJ-45 style, un-keyed, FCC compliant.
- Jacks shall be designed for 4-pair, 100 ohm balanced unshielded twisted pair (UTP) cable.
- Each jack shall be single unit construction, with snap – fit to industry standard keystone opening (.760" x .580").
- Jack housings shall fully encase and protect printed circuit boards and IDC fields.
- Modular jack contacts shall accept a minimum of 2000 mating cycles without degradation of electrical or mechanical performance.
- Jack contacts shall be constructed of Beryllium copper for maximum spring force and durability.
- Contact plating shall be a minimum of 50 micro-inches of hard gold in the contact area over 50 micro-inch of nickel.
- Jack termination method shall follow the industry standard 110 IDC punch-down
- Jacks shall be compatible with a 4-pair single punch impact tool designed specifically for the purpose.
- IDC contact termination towers shall have tapered pair-splitting features to aid wire insertion and minimize pair un-twist.
- Jacks shall terminate 26-22 AWG solid or stranded conductors.
- Jacks shall terminate insulated conductors with outside diameters up to .050".
- Jacks shall not require special cords, specialty tools or special installation requirements.
- Jacks shall include a translucent stuffer cap for wire retention and to permit visual inspection.
- Stuffer cap shall have retention snaps to assure conductor strain relief.
- Jacks shall accept FCC compliant 6 position plugs.
- Jacks shall accept optional hinged dust covers.
- Jacks shall be compatible with ANSI/TIA/EIA-606-A color code labeling.
- Jacks shall accept snap-on icons for specific identification.
- Jacks shall be available in various colors to meet specific customer applications.

These standards are adopted by the Department of Technology and Information (DTI), through the Technology and Architecture Standards Committee (TASC), and are applicable to all Information Technology use throughout the State of Delaware. Any questions or comments should be directed to dti_tasc@state.de.us.

- Jacks shall have attached wiring instruction labels to permit either T568A or T568B wiring configurations.

2. Category 6 Jack Performance Requirements

- All transmission performance parameters shall be independently verified by a UL or ETL third party testing organization.
- Category 6 jacks shall exceed Category 6 transmission requirements for connecting hardware, as specified in ANSI/TIA/EIA-568-B.2-1, Transmission Performance Specifications for 4-Pair 100 ohm Category 6 Cabling.
- Category 6 jacks shall exceed 10 Gb/s transmission requirements for connecting hardware, under the constraints of ANSI/TIA-TSB-155 (current draft).
- The manufacturer shall provide Category 6 component compliance certificates from third party testing organization upon request.
- Jacks shall be UL LISTED 1863 and CSA certified.
- Jacks shall exceed IEEE 802.3 DTE Power specification to 4 times the rated current limits with no degradation of performance or materials.
- Jacks shall be third party verified, error free Gigabit Ethernet performance to IEEE 802.3 standard.
- Jacks shall exceed 4 Gb/s data transmission capacity within the bandwidth of 1 – 250 MHz when configured in a 4-connector channel.
- Jacks shall exceed the 4-connector channel performance requirements of Category 6, per the ANSI/TIA/EIA-568-B.2-1 standard.
- Jacks shall exceed the 4-connector Category channel performance requirements for 10 Gb/s transmission over Category 6, according to TIA/TSB-155 (current draft).
- The 4-connector channel test configuration shall utilize Category 6 patch panels and Category 6 patch cords, from the same manufacturer, with qualified Category 6 cable.

3. Acceptable Manufacturers:

- Hubbell Premise Wiring.
  The Hubbell products listed in the table below comply with all requirements specified in this document

HUBBELL CATALOG NUMBER	Description
HXJ6xx	NEXTSPEED® Category 6 Jack

xx = Jack color. Replace xx with “W” for White, “BK” for Black, “B” for Blue, “GY” for Gray, “GN” for Green, “OW” for Office White, “OR” for Orange, “R” for Red, “Y” for Yellow. Refer to project drawing for color applications.

- Or approved equal of: Ortronics, Panduit, Systimax

4. Category 6 Jack Installation

- Horizontal cabling of the proper category shall be fully deployed from the TR or TE to each wall plate location according to applicable codes and standards.
- Cable slack, service coil, bend radii, and pathway fill ratio shall comply with applicable codes and standards.
- Metallic horizontal cable pathways shall be bonded to an approved ground according to ANSI-J-STD-607-A.
- Cable ends for termination shall be clean and free from crush marks, cuts, or kinks left from pulling operations.
- Terminate jacks according to manufacturer’s instructions.
- To maximize transmission performance, maintain wiring pair twists as close as possible to the point of termination.
- The length of wiring pair un-twist in each termination shall be less than 0.5 inches (13 mm).
- Jacks shall be properly mounted in plates, frames, or housings with stuffer cap fully installed

These standards are adopted by the Department of Technology and Information (DTI), through the Technology and Architecture Standards Committee (TASC), and are applicable to all Information Technology use throughout the State of Delaware. Any questions or comments should be directed to dti_tasc@state.de.us.

over IDC contacts.
- Horizontal cables extending from mounted jacks shall maintain a minimum bend radius of at least 4 times the cable diameter.
- Cable terminations shall have no tensile or bending strain on IDC contacts after assembly of faceplate or housing to the wall outlet.
- Jacks shall be tested as part of the installed horizontal cabling system, with faceplates assembled complete and properly mounted.
- Each link or channel in the horizontal cabling system shall be identified and tested individually, using an industry standard level III tester with correct settings.
- Each jack shall be tested as part of the horizontal channel or link for the parameters listed below.

C. Face Plates

The typical information outlet consists of a 1-Gang, 2-Port face plate for flush mounting (2) Category 6 Jacks - (1) data and (1) voice See drawings for additional information outlet configurations.

1. Face Plate Requirements

- Faceplates shall be constructed of high impact, UL94 V-0 rated thermoplastic unless otherwise shown or stated.
- Faceplates shall be 2.75" W x 4.5" H (69.8 mm x 114.3 mm) for single gang and 4.5” X 4.5” (114.3 X 114.3 mm) for double gang.
- Port size in each faceplate shall be industry standard vertical keystone opening size (.760” x .580”).
- Faceplates shall accept Hubbell XJ-series UTP jacks and Snap-Fit fiber optic, audio, and video modules for multimedia applications unless otherwise shown or stated.
- Faceplates shall provide for ANSI/TIA/EIA-606-A compliant workstation outlet labeling.
- Faceplates shall be provided with clear plastic and color-matched label field covers.
- Color-matched blank Snap-Fit modules shall be available separately to fill unused ports and openings as required.
- Two #6-32 pan head Phillips/slotted mounting screws shall be included with each single gang faceplate.
- Four #6-32 pan head Phillips/slotted mounting screws shall be included with each double gang faceplate.
- Jacks and Snap-Fit modules shall snap firmly into rear of faceplate and position flush to outer plate surface.
- Faceplates shall be compatible with standard NEMA openings and boxes.
- Faceplates shall be compatible with raceway fittings, surface mount boxes, service fittings, flush mount boxes and drywall rings.

2. Acceptable Manufacturers:

- Hubbell Premise Wiring.
  The Hubbell products listed in the table below comply with all requirements specified in this document

HUBBELL CATALOG NUMBER	Description
IFP11xx	1-Gang, 1-Port IFP Face Plate
IFP12xx	1-Gang, 2-Port IFP Face Plate
IFP13xx	1-Gang, 3-Port IFP Face Plate
IFP14xx	1-Gang, 4-Port IFP Face Plate
IFP16xx	1-Gang, 6-Port IFP Face Plate
IFP26xx	2-Gang, 6-Port IFP Face Plate
IFP29xx	2-Gang, 9-Port IFP Face Plate
IFP212xx	2-Gang, 12-Port IFP Face Plate

These standards are adopted by the Department of Technology and Information (DTI), through the Technology and Architecture Standards Committee (TASC), and are applicable to all Information Technology use throughout the State of Delaware. Any questions or comments should be directed to dti_tasc@state.de.us.

xx = Face Plate color. Replace xx with “W” for White, “BK” for Black, “GY” for Gray, “OW” for Office White, to project drawing for color applications.

- Or approved equal of: Ortronics, Panduit, Systimax

PART 12 CABLE ROUTING SYSTEMS

Each cable routing system has advantages and disadvantages. Particular systems are favored for a variety of reasons, including architectural considerations, appearances, cost, local ordinances, and material concerns.

Various means of distributing cable from Communications/Data rooms/closets to the user work areas are identified in the following:

A. Ceiling Distribution System

A distribution system within an accessible area above a false ceiling. This could either be a plenum area (where there is no enclosed system for cable routing) or an overhead conduit system (which has defined areas of access and routes).

B. “J” Hooks

Where not installed in conduits, cable trays, or other supporting devices, the horizontal wiring plan is to be installed onto “J” hooks or an acceptable equivalent from the information outlet to the termination point within the IDF or MDF/IDF room. The “J” hooks are to be installed a maximum of five feet apart and fastened to the ceiling or the top of the walls near the ceiling. The cables are to be tie-wrapped to the “J” hooks, without crimping the sheath. The cable contractor is to furnish and install the “J” hooks. Cooper B-Line BCM-21, 32, or 64 are acceptable.

C. Sleeves and Conduits

1. The use of conduits and sleeves within a building is common for the transport of communications cable. Conduits and sleeves are to be sized and routes are to be planned within and between buildings in order to route the cable plant from the MDF to IDF and IDF to Information Outlet, and to accommodate any additional cabling required. The sizing of the conduits and sleeves is to be based on the number of cables, the location and environment surrounding the sleeve or conduit, and acceptable conduit fill levels, which are typically 40%. All conduits are to be installed with the appropriate sweep to maintain the required bend radius for copper and fiber optic cable. All sleeves and conduits are to be installed with bushings and suspended according to building industry standards.

2. The following are guidelines to use in determining where sleeves and conduits are to be installed but does not limit nor identify all areas or situations where sleeves and conduits will be required.

   - All masonry walls that have cables passing through them are to have sleeves installed.
   - Gymnasiums and athletic areas are to have conduits installed to house cables passing through the and within the area.
   - Classrooms without suspended ceilings are to have conduits installed to house cables passing through and with the area.
   - Each MDF and IDF Room is to have sleeves installed to contain the large number of cables exiting the room. Conduits are to be installed in areas where cables extend from one building to another via covered or enclosed bridges and corridors.

3. Cable routing is to follow a “streets and avenues” path in corridors where possible. However, there are a number of reasons for exceptions. In some cases, the corridors do not allow cables to be run because of architectural constraints or inaccessible ceilings. Also, in order to maintain the 90-meter

These standards are adopted by the Department of Technology and Information (DTI), through the Technology and Architecture Standards Committee (TASC), and are applicable to all Information Technology use throughout the State of Delaware. Any questions or comments should be directed to dti_tasc@state.de.us.

standard for Category 6 cabling, some cables need to be run separately and diagonally to isolated information outlets. Throughout all runs, the contractor is to maintain EIA/TIA standards regarding the proximity of communications cabling to high voltage cabling, motors, transformers, fluorescent lighting, ballasts, etc.

PART 13 CABLING-GENERAL

A. All cable shall meet the requirements of the NEC, except where other authorities or codes impose a more stringent requirement or practice. Codes, such as the NEC, do not normally include transmission performance requirements. This section specifies the essential media transmission characteristics. It is advisable to consult standards associated with the planned service or equipment to determine any specific media limitations.

B. Contractor is to take all necessary precautions to assure that the maximum tensile load and minimum bend radius of all cables (fiber and copper) are not exceeded. When terminating Category 6 cable, care shall be taken to maintain pair twists up to the termination point and not more than 0.5" of the cable pairs shall be untwisted. It is preferred that the cable sheath is also not removed more than 0.5" from the termination point. Tie wraps are to be hand-tightened on cables and are not to crimp the sheath. Contractor is responsible for protecting all connectorized cables from damage by other contractors at the information outlet before and after installation of the outlet faceplates.

C. All riser and station cable installed is to be plenum-rated cable. The fluoropolymer resin that insulates Category 6 plenum cables is engineered as a fire safety innovation. The NEC requires that all cable installed in plenum spaces and not encased in conduit must have certain fire resistance and low smoke producing characteristics. Not only are such cables highly resistant to fire but they also produce very little smoke.

D. For all Voice cabling installed, "110" blocks shall be used for termination. The Copper Data cabling will be terminated onto Category 6 RJ45 Patch Panels. The fiber optic cabling will be terminated onto fiber distribution panels with SC connectors.

E. Cables shall be terminated on the appropriate unassigned (vacant) portions of the wall-mounted Main and Intermediate Distribution Frames or Patch Panels and run as uninterrupted conductor sections to the Information Outlets. All cable terminations shall be made uniformly in sequence, commencing with termination of the first cable pair on the first connection points in the upper left-hand corner of each block.

F. Minimum separation distances between pathways and power wiring of 480 V or less are shown in Table 1, below.

Table 1 Separation of Communications Pathways from <= 480V Power Lines

	Minimum Separation Distances		
Condition	< 2 kVA	2-5 kVA	> 5 kVA
Unshielded power lines or electrical equipment in proximity to open or nonmetal pathways.	127 mm (5 in)	305 mm (12 in)	610 mm (24 in)
Unshielded power lines or electrical equipment in proximity to a grounded metal conduit pathway	64 mm (2.5 in)	152 mm (6 in)	305 mm (12 in)
Power lines enclosed in a grounded metal conduit (or equivalent- shielding) in proximity to a grounded metal conduit pathway.	76 mm (3 in)	152 mm (6 in)	

All cabling shall be at least:

These standards are adopted by the Department of Technology and Information (DTI), through the Technology and Architecture Standards Committee (TASC), and are applicable to all Information Technology use throughout the State of Delaware. Any questions or comments should be directed to dti_tasc@state.de.us.

- 12” from high voltage lighting and fluorescent fixtures
- 72” from transformers and motors

PART 14 HORIZONTAL CABLING - CATEGORY 6 UTP DATA

All riser and station cable installed is to be plenum-rated cable.

A. Category 6 100 OHM balanced UTP Cable Requirements

The default cabling infrastructure shall be Category 6 unless specified otherwise.

1. Cable construction shall be four twisted pairs of 23 AWG insulated solid conductors, with a ripcord, surrounded by a tight outer jacket.
2. Conductor diameters shall be 0.0224” ± .0003” solid copper.
3. Conductor insulation diameter shall be 0.039” ± .0005” fluoro copolymer.
4. Outer jacket diameter shall be 0.235” ± .008” low smoke PVC, with a nominal wall thickness of 0.015”.
5. Ripcord shall be directly underneath the outer jacket.
6. Cable shall be marked every 2 ft including
   - Cable Manufacturer
   - Cable Description
   - Month and Year of manufacture.
   - Job number.
7. UL, ETL, or CSA agency certification or verification markings shall be marked on the cable jacket according to the certifying agency’s requirements.
8. Color coding of the pairs shall be as follows:
   - Pair 1: White/Blue; Blue
   - Pair 2: White/Orange; Orange
   - Pair 3: White/Green; Green
   - Pair 4: White/Brown; Brown
9. Cable shall be supplied in 1000 ft spools or 1000 ft Reelex boxes.

B. Category 6 100 OHM balanced UTP Cable Performance Requirements

1. All transmission performance parameters shall be independently verified by a UL or ETL third party testing organization.
2. Cable shall exceed Category 6 transmission requirements specified in ANSI/TIA/EIA-568-B.2-1, and shall be tested through 550 MHz.
3. Worst-case cable performance shall be +8.0 dB headroom over current TIA/EIA and ISO standards limits for NEXT and PSNEXT loss, and ELFEXT and PSELFEXT loss.
4. Insertion loss shall be 3.0% lower than standard Hubbell Category 6 plenum and riser cables described in Section 27 15 13.
5. Worst case electrical performance characteristics shall be as follows:
   - Characteristic Impedance: 100 + 15 (1.0-100 MHz) 100 + 20 (101-250 MHz)
   - Maximum Conductor Resistance: 9.38 /100 Meters @ 20°C
   - Maximum Resistance Unbalance: 3%
   - Maximum Mutual Capacitance: 5.6 nF/100 Meters @ 1 kHz
   - Maximum Capacitance Unbalance: 330 pF/100 Meters
   - Maximum Delay Skew: 25 ns/100 Meters
6. The manufacturer shall provide Category 6 component compliance certificates from third party testing organization upon request.
7. Cable shall be UL and C(UL) listed.
8. Cable shall exceed IEEE 802.3af DTE Power specification to 4 times the rated current limits with no

These standards are adopted by the Department of Technology and Information (DTI), through the Technology and Architecture Standards Committee (TASC), and are applicable to all Information Technology use throughout the State of Delaware. Any questions or comments should be directed to dti_tasc@state.de.us.

degradation of performance or materials.
9. Cable shall be third party verified, error free Gigabit Ethernet performance to IEEE 802.3ab.
10. Cable shall exceed the requirements of TIA/TSB-155: 10 Gb/s Ethernet Operation over 55 Meters Channel Length.
11. Cable shall meet or exceed the 4-connector channel performance requirements of Category 6, per the ANSI/TIA/EIA-568-B.2-1 standard.
12. The 4-connector channel test configuration shall utilize Category 6 jacks and patch panels, with Category 6 patch cords, from the same manufacturer, with qualified Category 6 cable.

C. Acceptable Manufacturers:

1. Hubbell Premise Wiring and Mohawk Cable.
   The Hubbell products listed in the table below comply with all requirements specified in this document

HUBBELL CATALOG NUMBER	Description
C6SPxx	NEXTSPEED Category 6 550 MHz – Plenum Spool
C6RPxx	NEXTSPEED Category 6 550 MHz – Plenum REELEX

xx = Cable color. Replace xx with "W" for White, "GY" for Gray, "B" for Blue, "Y" for Yellow. Refer to project drawing for color applications.

MOHAWK CATALOG NUMBER	Description
M58801	Category 6 – Plenum, Blue, Spool
M58804	Category 6 550 MHz – Riser, Blue, Spool

Refer to project drawing for color applications.

2. Or approved equal of: Belden, Berk-Tek, Systemax

D. Category 6 100 OHM balanced UTP Cable Installation Requirements

1. Pull cable into conduits, or place into raceway or cable tray as specified. Do not exceed 25 Lb pull force per cable. Use appropriate lubricants as required to reduce pulling friction.
2. All exposed wiring shall be installed in surface raceway.
3. All wiring above ceilings or below access floors shall be installed in cable tray or open-top cable hangers.
4. Cable slack and service loops shall be stored properly above the ceiling or under the access floor. A "figure-eight" service loop is recommended for Category 6 cabling to reduce EMI coupling.
5. Pathway fill ratio in conduit, tray, raceway, etc. shall not exceed 40% of pathway cross-sectional area.
6. Installed cable bend radius shall be greater than 4X cable diameter. Avoid kinking or twisting the cable during installation.
7. Do not over-tighten cable ties, and do not use staples or clamps to anchor cables. Velcro straps are recommended.
8. Recommended spacing of cable supports above the ceiling shall be 48".
9. Maintain the following clearances from EMI sources:
   - Power cable: 6 in.
   - Florescent lights: 12 in.
   - Transformers and electrical service enclosures: 36 in.
10. Communications cabling that must cross power cables or conduit shall cross at a 90-degree angle, and shall not make physical contact.
11. Length of each horizontal cable run from the TR to the wall outlet shall not exceed 90 meters.
12. Leave sufficient slack for 90 degree sweeps at all vertical drops.
13. Do not install cable in wet areas, or in proximity to hot water pipes or boilers.
14. Cable ends for termination shall be clean and free from crush marks, cuts, or kinks left from pulling operations.

These standards are adopted by the Department of Technology and Information (DTI), through the Technology and Architecture Standards Committee (TASC), and are applicable to all Information Technology use throughout the State of Delaware. Any questions or comments should be directed to dti_tasc@state.de.us.

15. Installed cable jackets shall have no abrasions with exposed conductor insulation or bare copper 'shiners". The installer is responsible to replace damaged cables.
16. Horizontal cables extending from mounted jacks or panels shall maintain a minimum bend radius of at least 4 times the cable diameter.
17. Firestop all cable penetrations through fire-rated barriers per local codes.

PART 15 VERTICAL DISTRIBUTION SYSTEMS

A. Riser Connectivity and Cable General

1. The cabling system shall use a fiber/copper riser cable system between the IDF rooms and the MDF within the building.

2. Copper Voice/Data Riser shall be 25-pair Category 3 plenum Copper Riser Cables Installed between each IDF and the MDF as indicated in the attached riser drawings. These cables are to be terminated onto the 110 termination blocks on the wall-mounted or rack-mounted frames in the IDF Rooms and MDF Room.

3. Fiber Riser shall be 12-strand multimode OM4 fiber optic cable is to be installed between each IDF and the MDF Room as indicated in the drawings. These cables are to be terminated onto fiber optic patch panels located in the relay racks in each of the IDF rooms and the MDF Room. The 12-strand multimode OM4 fiber cable is to be connectorized with SC connectors on both ends.

4. A plenum coaxial cable is to be installed from the MDF Head-End Room to the various IDF Rooms within the building. The cable is to be fastened to the wall- mounted plywood backboard in each floor's IDF and MDF Room with 15 feet of slack neatly coiled, tie wrapped, and left dead-ended.

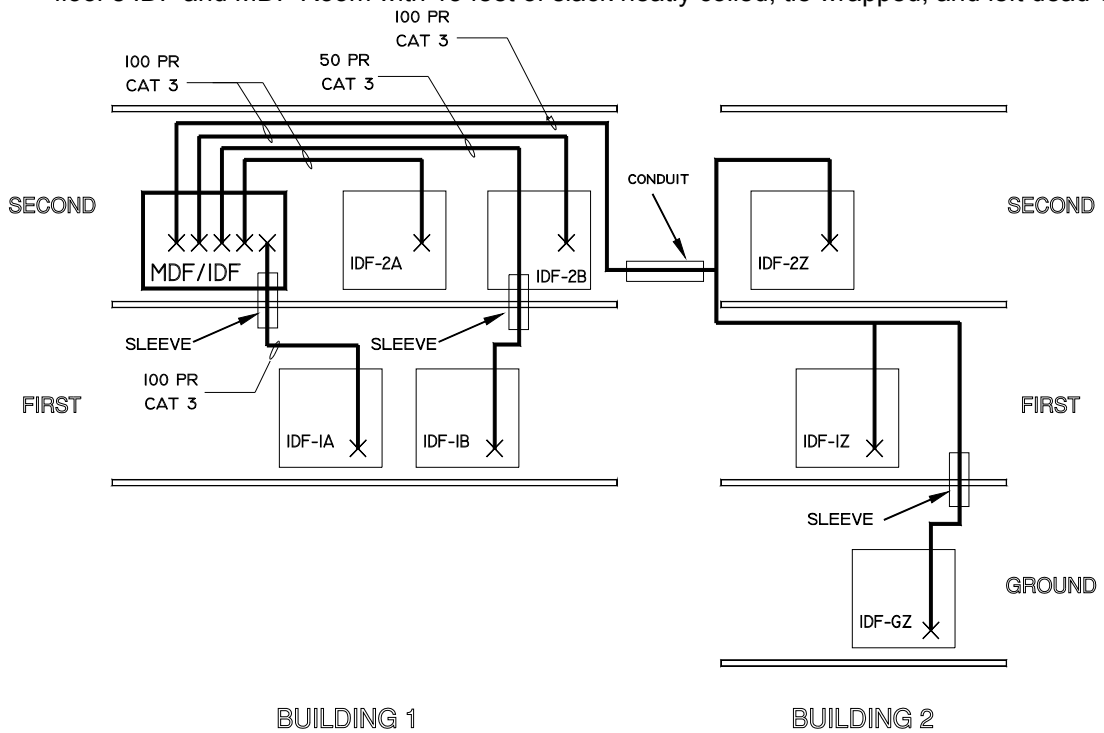

SAMPLE RISER-VOICE CABLING
SCALE: NONE

These standards are adopted by the Department of Technology and Information (DTI), through the Technology and Architecture Standards Committee (TASC), and are applicable to all Information Technology use throughout the State of Delaware. Any questions or comments should be directed to dti_tasc@state.de.us.

B. Fiber Backbone Distribution cable: indoor, non-armored

1. Fiber Backbone Distribution cable Requirements

- Optical Fiber Indoor Distribution Cable shall be constructed with 12 optical fibers, each coated with a 900 micron color-coded PVC tight buffer, surrounded by an aramid yarn strength member, and a single outer jacket with the appropriate flame rating.
- Fiber cables shall be a non-metallic construction, OFNP (Plenum FT-6) flame rating.
- Cable markings shall repeat every meter, and shall have at minimum the following information:
  a. Sequential length indicator marking (meters)
  b. Manufacturer's name and catalog number
  c. Lot number, traceable back to the fiber draw lot
  d. Date of Manufacture
  e. Fiber type: (OM4 or Singlemode)
  f. Cable rating (OFNR, OFNP, etc.)
  g. Applicable Telcordia, TIA, IEC, and ICEA standard references and appropriate UL/CSA agency listings
- Cable jacket color shall be Aqua for Laser optimized 50 micron OM4 multimode.
- Buffer position color codes shall conform to standard ICEA and TIA-598 conventions as follows:1-Blue, 2-Orange, 3-Green, 4-Brown, 5-Slate, 6-White, 7-Red, 9-Yellow, 10-Voilet, 12-Aqua.
- Optical fiber in any cable construction shall be enhanced performance, bend-insensitive type.
- Multimode OM4 cables shall perform at minimum to the attenuation, bandwidth, and distance application parameters in the table below.

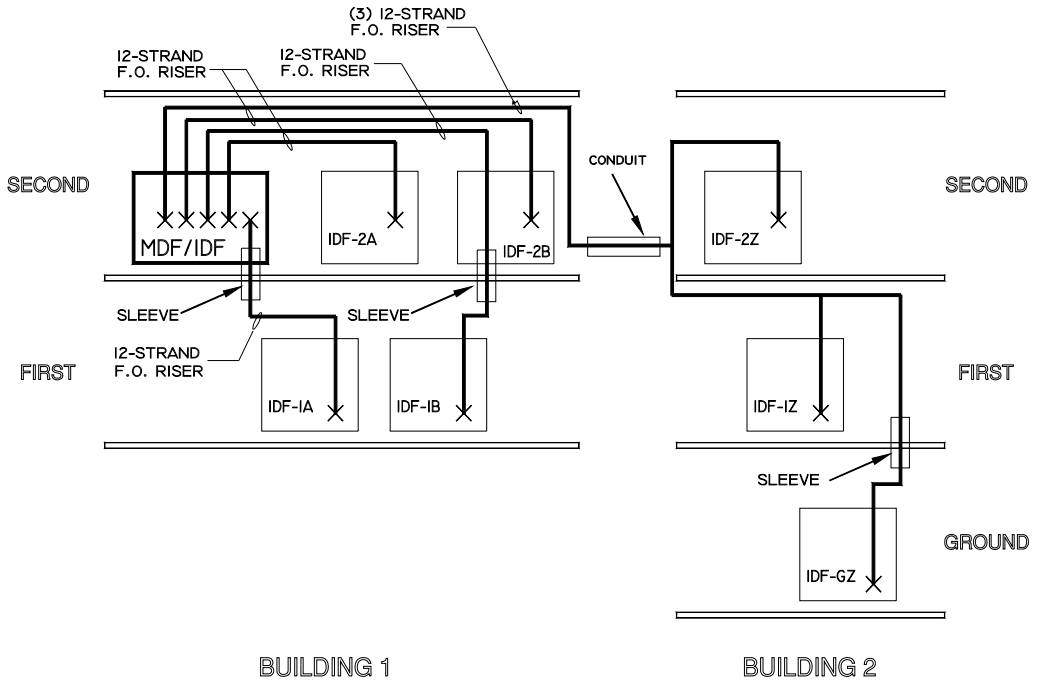

SAMPLE RISER-FIBER OPTIC CABLING
SCALE: NONE

These standards are adopted by the Department of Technology and Information (DTI), through the Technology and Architecture Standards Committee (TASC), and are applicable to all Information Technology use throughout the State of Delaware. Any questions or comments should be directed to dti_tasc@state.de.us.

Multimode OM4 Fiber Gigabit and 10 Gigabit Ethernet Application Chart					
Fiber Type	**Wavelength (nm)**	**Max Attenuation (dB/km)**	**Bandwidth (MHz•Km)**	**1 GbE Distance (m) @ 1300/850nm**	**10 GbE Distance (m) @ 1300/850nm**
MM 50 µm (OM3)	**850 / 1300**	**3.5 / 1.0**	**1500 / 500**	**1000* / 600**	**550 / 300**

** 2000m for engineered links*

- Optical fiber cables as supplied shall meet or exceed the applicable IEC 60793-1 qualification test requirements for optical, geometry, mechanical, and environmental parameters as specified, and tested in accordance with TIA/EIA-455.

2. PERFORMANCE REQUIREMENTS

- For installed fiber cables, all fiber strands shall pass insertion loss and return loss in accordance with test methods ANSI/TIA/EIA-526-14 for multimode OM4 cables.
- Installed fiber cables shall exceed all currently ratified bandwidth-distance- application performance parameters for IEEE 802.3ae (10 GbE) and for IEEE 802.3ba (40/100 GbE)
- Plenum cables shall be rated UL NFPA-262/UL910/CSA FT-6

3. Acceptable Manufacturers:

- Hubbell Premise Wiring.
  The Hubbell products listed in the table below comply with all requirements specified in this document

HUBBELL CATALOG NUMBER	Description
HFC1012P3	Fiber Optic Cable – 12-Strand MM 50 µm (OM3), Plenum, Aqua

MOHAWK CATALOG NUMBER	Description
M95048	Fiber Optic Cable – 12-Strand MM 50 µm (OM3), Plenum, Aqua

- Or approved equal of: Corning, Berk-Tek,

4. Fiber Backbone Distribution cable: indoor, non-armored Installation Requirements

- Prior to cable deployment, backbone pathways (conduit, tray, raceway, wire basket, etc.) for cable routing shall be permanently installed in compliance with contract documents, and applicable codes and standards.
- Racks, cabinets or enclosures into which cables are to be routed shall be permanently installed in compliance with contract documents, and applicable codes and standards.
- Optical fiber cables shall be deployed using the proper pulling grip or apparatus attached to the exposed cable strength member. Contact the cable manufacturer regarding permissible methods for cable pulling. Never pull directly on the fiber strands of an optical fiber cable.
- Cables shall not exceed minimum bend radius limits or maximum pulling loads during or after installation. Avoid crushing or abrasion of the cable jacket during installation.
- Installed cables shall be fully supported and strain relieved from pulling on terminated connections. Apply wire ties loosely and avoid crushing or clamping cables with excessive force.
- All non-armored fiber optic riser cables are to be installed in plenum inner-duct. Fibers in inner-duct or armored plenum riser fiber serving as riser cables are to be installed according to the attached riser drawing. Contractor to size the inner-duct for each cable run. Multiple fiber optic

These standards are adopted by the Department of Technology and Information (DTI), through the Technology and Architecture Standards Committee (TASC), and are applicable to all Information Technology use throughout the State of Delaware. Any questions or comments should be directed to dti_tasc@state.de.us.

cables can occupy an individual inner-duct when non-armored fiber is not used.

PART 16 CAMPUS CABLING

A. Outside Plant Cabling

1. The contractor is to follow the drawings regarding the installation of outside plant (OSP) cabling to buildings remote from the main building, such as portable rooms, trailers, other small buildings, etc. Many remote buildings can be served by conduits underneath or within ceilings of protected overhangs and bridges.
2. The contractor is to furnish and install outside plant cables and associated protector blocks, splice cases, and grounding where applicable in an approved manner.
3. The contractor will be responsible for obtaining all required right-of-way easements and permits before any excavation on the property begins.
4. Outside plant optical fiber cable shall be 50/125 multimode OM4 laser-optimized or Singlemode strands loose-buffer tube water- blocking for outside plant application.
5. Outside plant copper cable will be solid insulated conductors 24 AWG with gel-filled core in 25-, 50-, or 100-pair increments.
6. RG-11 coaxial cable rated for OSP use will be used between buildings. Outside plant cables are to be routed aerially, underground, or buried by designed. Contractor may provide recommendations as to cable routing for approval.
7. Where noted, the contractor is to use aerial plant cabling between buildings. In cases where cables are attached to poles or buildings, aerial spans are not to exceed 100 ft from the last pole to the building, using slack span construction (no guying at either end). EIA/TIA guidelines and NEC code are to be strictly adhered to for separation and clearances from power lines and traffic.
8. Underground Cable is to be enclosed in conduit buried at least 24 inches below ground surface. In situations where fiber optic cables will be used, inner-ducts will be placed inside conduits to ensure physical protection for the cable. Proper fill ratios must be observed as well as proper bend radius. Metal sleeves through the foundation will be used to prevent conduit shearing. Sleeves must extend from inside the foundation wall to a minimum of 12”. The end of the conduit within the building must be securely fastened to withstand the placing of cable. Sleeves are to be sealed with plugs or sealant. Conduit must be bounded and grounded in compliance with EIA/TIA and NEC requirements.
9. Minimum depth of trench should allow for 24 inches of cover from top of cable to final grade. Upon refilling the trench, the soil must be tamped to prevent sunken trench appearance. Conduit sleeves will be used for penetrations through foundation walls, using the same guidelines as for underground cable. OSHA regulations concerning shoring requirements must be followed during all phases of buried cable installation. Contractor must install buried cable so as to meet minimum separation distances from adjacent structures (power, gas, water, etc.) To minimize the chance of accidental dig-up, contractor will install detectable warning tape a minimum 18 inches above cable.
10. Multi-pair protector blocks shall be installed to provide protection from voltage surges and sneak current. The protector panel shall be equipped with 110 wiring block and solid state protector units type 4C, and others depending on the situation. Project Manager will coordinate with contractor.

These standards are adopted by the Department of Technology and Information (DTI), through the Technology and Architecture Standards Committee (TASC), and are applicable to all Information Technology use throughout the State of Delaware. Any questions or comments should be directed to dti_tasc@state.de.us.

Protector panels shall be installed within 50 feet of each outside plant cable building entry point. Protector panels must be grounded and bounded to the building grounding system.

11. Splice cases shall be provided and installed at both ends of outside plant cables. Splice cases shall be used for cable transition from to inside plant cables.
    - Fiber optic splice cases shall be designed to seal, bind, anchor, and protect cable splices and transition points from outside plant to inside plant cables. The case shall be fully equipped with a suitable splice kit for the fiber quantities specified.
    - Copper splice case shall be designed for use with non-pressurized cable. The case shall be of a durable fire-retardant material, single piece with a hinged cover. The case shall be equipped with a cable entrance end plates assembly of adequate size to accommodate entering and exiting cables, ground straps, and all necessary termination, mounting hardware.

12. Pedestal/Cabinet shall have a heavy gauge galvanized steel housing or equivalent and be weather-resistant for the termination of copper and fiber optic cables. It shall be equipped with ground bar, protector blocks, and adequate space for splice cases to accommodate transition of cables into or out of the cabinet. Pedestal/Cabinet size dependent upon each situation.

13. All OSP cables will be grounded according to EIA/TIA and NEC standards and codes.

14. Contractor is to install a RG-11U Plenum Coaxial cable between the CATV Head-End Location and the MDF Room. These cables are not to be terminated, but must be neatly coiled and tie-wrapped with 40 feet of slack cable remaining at each end.

PART 17 PATCH CABLES

A. Patch cables should meet the minimum performance requirements specified for each system. This requirement specifically prohibits the use of flat, non-twisted (also known as "silver satin") cords for Data or local area network applications. However, "silver satin" patch cables are acceptable for use in telephone systems.

B. Fiber Patch Cords (Fiber patch cords shall be Owner provided. This section is for reference only.)

1. Fiber Patch Cord Requirements

- Provide factory-made, dual SC fiber cables in 1-Meter lengths for every fiber cable installed.
- SC Optical fiber patch cords shall be constructed with aramid-reinforced PVC loose-jacket duplex cable, with optical fibers having a 900-micron PVC buffer coating diameter. Optical fiber used in 10 GbE patch cords shall be laser optimized 50 micron multimode OM4, per ANSI/TIA/EIA-492AAAC, with no substitutes.
- Multimode OM4 50 micron core optical fiber within the patch cord cable shall be graded index type in accordance with ANSI/TIA/EIA-492AAAC, with the following specifications:
    a. Core diameter: 50 +/-3.0 microns
    b. Cladding diameter: 125 +/- 2.0 microns
    c. Core/cladding concentricity: less than 3.0 microns
    d. Core non-circularity: 6% maximum
    e. Proof test: 100 kpsi
    f. Effective modal bandwidth: 2000 MHz•km
    g. Coating diameter: 245 +/-15 microns
    h. Buffer diameter: 900 microns nominal
    i.
- Connector terminations on each end of the fiber patch cord shall be heat-cured epoxy type with a machine polish, inspected 100% for polish quality and mated-pair insertion loss.
- Epoxy volume within each connector shall be sufficient to properly surround and strain relieve the fiber

These standards are adopted by the Department of Technology and Information (DTI), through the Technology and Architecture Standards Committee (TASC), and are applicable to all Information Technology use throughout the State of Delaware. Any questions or comments should be directed to dti_tasc@state.de.us.

and buffer layer at the buffer/fiber transition inside the connector body.

- Optical fiber patch cords shall be supplied in a sealed plastic bag with dust caps installed on each end, with insertion loss test results included.
- Optical fiber patch cords shall be available in standard lengths of 1, 2, 3, and 5 meters.
- Optical fiber patch cords shall be manufactured with industry standard SC connector terminations on each end.
- Factory mounted connectors on each end of the patch cords shall comply with the applicable ANSI/TIA/EIA-604 Intermateability standard.
- Buffered fiber strands within the cable jacket shall be surrounded by aramid (Kevlar) material serving as a strength member.
- The aramid (Kevlar) strength member shall be mechanically secured at each connector to provide tensile strain relief of the optical fiber.
- Additional strain relief of the buffered fiber shall result from crimping the rear of the connector during termination.
- Duplex fiber patch cords shall be a zip-cord cable construction with jacket cross-section dimensions of 3.0 mm X 6.0 mm for SC style. \
- Duplex fiber patch cords shall have reverse-pair polarity according to ANSI/TIA/EIA-568-B.3 and TIA/EIA-TSB-125.
- Cable jacket shall be marked with the cable manufacturer, UL Optical Fiber Non-Metallic Riser rating (Type OFNR) designation, lot number, and fiber core/cladding diameter designation.
- Fiber A-B polarity shall be clearly marked on each end of duplex patch cords.
- Optical fiber patch cord jacket color shall be aqua blue, specifically for 50 micron laser optimized multimode OM4 fiber cables.
- Fiber patch cord connector materials shall be as follows:
  a. SC Ferrules: zirconium ceramic
  b. SC housings: injection molded thermoplastic
  c. Dust Cap: nylon or PVC
  d. Strain relief boot: UL94-V0 molded PVC
  e. Strain relief boot on all connectors shall be beige.
  f. SC connector outer housing shall be beige.

2. Fiber Patch Cord Performance Requirements

- Multimode OM4 50 micron laser optimized patch cords shall have a maximum mated-pair insertion loss of 0.60 dB per end, with a minimum return loss of –20 dB.
- Fiber patch cords shall exceed 10 Gigabit Ethernet performance requirements of IEEE 802.3 standard.
- Fiber patch cords shall exceed the mechanical reliability requirements for tensile, flex, twist and impact as specified in ANSI/TIA/EIA-568-B.3, Annex ‘A’.
- Fiber patch cords shall exceed the environmental reliability requirements for high/low temperature and humidity as specified in ANSI/TIA/EIA-568-B.3, Annex ‘A’.

3. Acceptable Manufacturers:

- Hubbell Premise Wiring.
  The Hubbell products listed in the table below comply with all requirements specified in this document

HUBBELL CATALOG NUMBER	Description
DFPCSCSCExMM	SC-SC Optical Fiber Patch cords, 50/125 MM, Aqua

x = Length. Replace x with standard lengths of 1, 2, 3, 5 meters

- Or approved equal of: Ortronics, Panduit, Systimax

C. Category 6 Patch Cords

The default cabling infrastructure shall be Category 6 unless specified otherwise.

1. Category 6 Patch Cord Requirements

- The contractor shall provide Category 6 Patch Cords only where called for on the drawings.

These standards are adopted by the Department of Technology and Information (DTI), through the Technology and Architecture Standards Committee (TASC), and are applicable to all Information Technology use throughout the State of Delaware. Any questions or comments should be directed to dti_tasc@state.de.us.

- Category 6 patch cords shall be constructed with a clear polycarbonate plug and boot having vertically staggered, trifurcated contacts, each having 50 micro-inches of gold plating.
- Plug dimensions and function shall comply with FCC 47, Part 68.5.
- Patch cords shall have a snag-less feature, integral to the strain relief boot on each end.
- Patch cords shall be constructed with category 6 patch cable, with 24 AWG 7/32 tinned copper stranded conductors, each insulated with polyethylene, and overall jacket with UL flame-retardant PVC.
- Patch cords shall be manufactured using a T568B wiring format, and shall function suitably for either T568A or T568B wiring schemes.
- Patch cords shall be available in the following colors: black, blue, gray, yellow, orange, red, green, white, and purple. Custom lengths and colors shall be available with a delivery lead-time quotation.
- Standard patch cord lengths shall range from 3 ft. to 20 ft.

2. Category 6 Patch Cords

- All transmission performance parameters shall be independently verified by a UL or ETL third party testing organization.
- Category 6 patch cords shall be channel performance balanced with Hubbell category 6 jacks, patch panels, and punch-down blocks.
- Category 6 patch cords shall meet or exceed Category 6 component transmission requirements for connecting hardware, as specified in ANSI/TIA/EIA-568-B.2-1 standard.
- The manufacturer shall provide Category 6 component compliance certificates from third party testing organization upon request.
- Patch cords shall be cUL and UL LISTED 1863.
- Patch cords shall exceed IEEE 802.3 DTE Power specification to 4 times the rated current limits with no degradation of performance or materials.
- Patch cords shall be third party verified, error-free Gigabit Ethernet performance to IEEE 802.3 standard.
- Jacks shall exceed 4 Gb/s data transmission capacity within the bandwidth of 1 – 250 MHz when configured in a 4-connector channel.
- Category 6 patch cords shall meet or exceed the 4-connector channel transmission performance requirements of Category 6, per ANSI/TIA/EIA-568-B.2-1 standard.
- The 4-connector channel test configuration shall utilize Category 6 patch panels, blocks, and jacks,

3. Acceptable Manufacturers:

- Hubbell Premise Wiring.
  The Hubbell products listed in the table below comply with all requirements specified in this document

HUBBELL CATALOG NUMBER	Description
HC6xx03	Category 6 Patch Cord, 3FT
HC6xx05	Category 6 Patch Cord, 5FT
HC6xx07	Category 6 Patch Cord, 7FT
HC6xx010	Category 6 Patch Cord, 10FT
HC6xx15	Category 6 Patch Cord, 15FT
HC6xx20	Category 6 Patch Cord, 20FT
HC6xx25	Category 6 Patch Cord, 25FT

xx = Cable Color. Replace xx with “W” for White, “BK” for Black, “B” for Blue, “GY” for Gray, “GN” for Green, “P” for Purple, “OR” for Orange, “R” for Red, “Y” for Yellow. Refer to project drawing for color applications.

- Or approved equal of: Ortronics, Panduit, Systimax

PART 18 FIRE STOP - PENETRATION SEALANT

A. Provide fire-resistant silicone foam fill to restore fire ratings to all wall, floor, or ceiling penetrations. Foam must be UL classified and meet NEC and local code.

B. All penetrations through fire-rated floors and walls shall be sealed to prevent the passage of smoke, fire, toxic gas, or water. The fire rating of the penetration seal shall be at least that of the floor or wall

These standards are adopted by the Department of Technology and Information (DTI), through the Technology and Architecture Standards Committee (TASC), and are applicable to all Information Technology use throughout the State of Delaware. Any questions or comments should be directed to dti_tasc@state.de.us.

into which it is installed, so that the original fire rating of the floor or wall is maintained as required by Article 300-21 of the National Electric Code.

C. No flammable material may be used to line the chase of the hole in which the fire stop material is to be installed.

D. When damming materials are to be left in place after the seal is complete, then all such materials shall be non-flammable.

E. The sealant shall be poured into the hole after each cable has been spread to allow a minimum of ½" of foam to flow between them. No cables may be touching each other, because contact between cables could allow voids to form in the fire stop.

F. If plastic cartridges are used for smaller installations, the chemical components of the foam shall be pre-measured within the cartridges to ensure the proper ratios.

G. The sealant shall remain resilient and pliable to allow for the removal and/or addition of cable without the necessity of drilling holes. It shall adhere to itself perfectly to allow any and all repairs to be made with the same material. It shall allow for vibration, expansion, and/or contraction of anything passing through the penetration without affecting the seal, or cracking, crumbling, and spalling.

H. When sealant is injected into a penetration, the foam shall expand to surround all the items within the penetration at that time and be fire resistant, maintaining the pass-minute rating.. No heat shall be required to further expand the foam to block the passage of fire and smoke or water.

I. The foam sealant material shall have been subjected to fire exposure testing in accordance with standard time-temperature curve in the Standard, UL, ASTM E

J. 119, and NJPA 251. The foam fire-stop material shall also have been subjected to the hose stream test in accordance with UL 10B.

PART 19 TESTING

A. General Test Procedures

1. Before an application for final acceptance of the work will be considered, all tests stated within this section shall be satisfactorily completed. The communications work shall include miscellaneous tasks, (e.g., removal of panel trims, junction, and pull box covers) deemed necessary to demonstrate compliance with the requirements of the Communications specifications, as well as cable and equipment manufacturers' recommended installation procedures.

2. Upon completion of testing and problem resolution, all connections must be 100% error free: "Error free" is defined to mean the item meets all the manufacturers' specifications and recommendations as published in their latest manufacturing manuals for proper installation and testing. In addition, each item must conform with all other related industrial practices and standards, Building Trades, and Electrical and Communications Industry Standards and Practices.

3. Upon successful completion of each item of testing, the Contractor shall issue in writing a certificate of compliance, along with the test results, to the Project Manager. All failed CAT-6 cables and/or Fiber strands shall be clearly labeled and identified as defective, with the type of defect (i.e. open ring side, grounded tip, short, excessive loss, etc.) identified.

4. The Contractor shall remedy any defective copper cable pair or Fiber cable strand. The Fiber trouble location and identification must be completed with an OTDR.

B. Copper Cable Test Procedures

1. Contractor must complete cable system performance verifications on all copper and fiber cable as specified below and provide the test results to the owner or project manager. Category 6 cable must meet or exceed all manufacturer's and EIA/TIA standards for performance and installation. Fiber cable must also meet or exceed all manufacturer's and EIA/TIA standards for performance

These standards are adopted by the Department of Technology and Information (DTI), through the Technology and Architecture Standards Committee (TASC), and are applicable to all Information Technology use throughout the State of Delaware. Any questions or comments should be directed to dti_tasc@state.de.us.

and installation.

2. All copper and fiber optic testing documentation is to be submitted on a CD, as well as 8.5” x 11” hard copies.

3. At a minimum, in addition to any other required testing, the Contractor shall conduct and report on the following tests of copper cabling after the installation is complete:

   - MDF-to-IDF tests of all riser pairs installed under this contract, to determine continuity, shorts, crossed pairs, correct pinning, and grounds.
   - IDF (110 frame or patch panels)–to-information outlet tests of all cable pairs installed under this contract, to determine continuity, shorts, crossed pairs, correct pinning, and grounds.
   - The coaxial cable is to be tested from the MDF Room to the IDF Room and from the IDF Room to the coax outlet. Contractor is to test for continuity, shorts, and grounds.
   - The horizontal Category 6 cabling, installed from the IDF Room to the Information Outlet at the workstation, is to be manufacturer certified and warranted for Category 6 compliance. All manufacturers’ performance certificates and extended warranties are to be provided to the owner or project manager upon completion of the testing and manufacturer certification. Contractor is to present copies of certificates identifying the contractor as a current certified VAR for the selected cabling system and therefore, qualified to install a certified cable plant.
   - All category 6 cabling is to be tested end–to-end and documented for Category 6 compliance at all frequencies up to and including 500MHz for Category 6. Such testing is to comply with the procedures and standards outlined by the cable manufacturer and EIA/TIA TSB - 67 concerning testing of Category 6 cable plant.
   - A certified Cat 6 testing system is to be used for such testing to insure that cable pairs are defect free. "Defect free" for the copper cable is defined as a copper pair not having any pair reversals, split pairs, shorts or opens. Test results shall be provided to the Owner or Project Manager within 2 days after testing or 5 days prior to the Owner connecting electronic equipment onto the cable network, whichever is sooner. The contractor must also provide testing summary reports of all category 6 cables including run numbers, and pass/fail results with respect to length, impedance, DC resistance, mutual capacitance, attenuation, NEXT loss, and active ACR. The contractor must also provide spreadsheet analysis of the linearly dependent parameters of length, DC resistance, mutual capacitance, and attenuation; the field measured values shall be compared to the specifications values on one spreadsheet.
   - In the event that a CAT-6 cable fails to perform to the manufacturer's specifications, the Contractor will, at the owner’s request, remove the cable and replace it with a new cable, replacing the defective cable at no additional expense to the owner.
   - End-to-end testing is required for every RJ-45 connection. An owner's representative may accompany the Contractor’s staff to witness the end-to-end testing. End-to-end testing is defined herein as testing all cabling links to the very last termination point. The Contractor is required to supply sufficient quantities of two-way radios and test equipment to ensure that the tests are completed accurately and expeditiously.
   - The Owner, DTI, or Project manager may conduct performance tests of transport electronics connected to the cabling system. Successful equipment performance tests do not relieve the Contractor from the specified testing, repair, and documentation requirements.
   - The Contractor shall provide to the Owner or Project Manager with copies of all copper-cable test results.

C. Fiber Optic Cable Test Procedures

1. All fiber optic cable and associated equipment lateral, and vertical riser cabling must be thoroughly tested. The fiber cable will be accepted only after each strand is tested in accordance with the specifications defined herein. All strands are to be tested and found to be 100% acceptable.

2. The Contractor shall test all cables, connectors, associated equipment, and hardware furnished by the Contractor upon receipt of same as defined herein.

3. As a minimum, the Contractor shall test, as described below, all optical fiber cable strands installed within the scope of this proposal:

These standards are adopted by the Department of Technology and Information (DTI), through the Technology and Architecture Standards Committee (TASC), and are applicable to all Information Technology use throughout the State of Delaware. Any questions or comments should be directed to dti_tasc@state.de.us.

- Fully test complete links only. Piecemeal testing is not acceptable.
- Perform end-to-end, bi-directional attenuation (loss) test for each fiber strand at 850nm and 1300nm wavelengths. Conduct tests in accordance with EIA/TIA-526-14, Method B and with test instrument manufacturer's published instructions.
  a. Demonstrate that measured link loss does not exceed the expected value based on the number of mated connector pairs, the connector's published loss per mated pair, and the cable's published loss based on distance.
  b. Strands whose measured attenuation falls outside the acceptable range shall be subject to further inspection and testing to determine the nature of the fault. At a minimum, an OTDR shall be used to: determine the true loss for each connector pair and the exact length of the fiber, and to identify the presence of any core damage.
  c. Riser end-to-end testing of individual optical fibers is considered to be from the MDF Room to the IDF Rooms distribution panels on each floor.
  d. Horizontal end-to-end testing of individual optical fibers is considered to be from each floor’s IDF Room’s Fiber Distribution Panels to the Information Outlet.
- Faults related to connectors shall be corrected and the fiber re-tested as stated above until acceptable attenuation measurements are received.
- Where defects are found to be inherent in the fiber itself, notify the Project Manager in writing. Upon obtaining approval by the Project Manager, replace any cable having fewer than the manufacturer's guaranteed number of serviceable fibers.
- Remove all newly installed defective cables from pathways. Do not abandon cables in place.
- All test results and corrective procedures are to be documented and submitted as a spreadsheet to State/DTI within five (5) working days of test completion.
- Considering that the fiber cable plant is to be certified, each test report form shall provide at least the following information:
  a. Project name
  b. Contractor's name
  c. Date(s) of preparation and of testing
  d. Fiber type, strand count, connectors and patches
  e. Designated cable number (regardless of whether only one cable of each type is present) and individual fiber numbers
  f. Make, model, serial number, and date of last calibration of test equipment used
  g. Name of test crew foreman
  h. Test results: Calculated maximum link loss, length of run, OTDR, and also
  i. Power Meter-measured link loss for each fiber, pass/fail result, and comments.
- In addition to the tests specified above, the Contractor shall be present while the Owner or Project Manager conducts performance tests of the transport electronics connected to the cabling system; the contractor shall conduct on- the-spot cable tests and effect cable plant repairs as necessary. Successful equipment performance tests do not relieve the Contractor from the specified testing, repair, and documentation requirements.

- Recommended test equipment:
  a. Optical fiber power meter and Light Source: Siecor CPM-850/1300 meter and OS-100D Light Source, or equivalent.
  b. TDR: Tektronix TFP2 FiberMaster, Laser Precision TD-2000 or equivalent with 850nm and 1300nm emitter modules and hard copy printout, or equivalent.
  c. Optical fiber inspection scope: Cambridge Instruments 10x fiber scope, or equivalent.

- The Contractor shall provide copies of all fiber and copper cable test results to the Owner or Project Manager.

- All fiber optic cabling (workstation and riser) is to be installed in a manner that complies with and allows Owner to receive the manufacturer’s extended warranty. The contractor is to be certified and authorized to provide the extended warranty. A manufacturer's extended warranty is to be provided, through the

These standards are adopted by the Department of Technology and Information (DTI), through the Technology and Architecture Standards Committee (TASC), and are applicable to all Information Technology use throughout the State of Delaware. Any questions or comments should be directed to dti_tasc@state.de.us.

contractor, upon completion of the testing and manufacturer's certification. Contractor is to present copies of certificates identifying the contractor as a current certified VAR and therefore, qualified to certify and install the cable plant.

- The Owner and Project Manager reserves the right to observe any or all portions of the testing. Notification of testing is at least three days prior to start of testing.

D. Replacement

Any fiber strand, connector, block, or module installed by the Contractor that fails to meet the loss budget, or that tests below the manufacturer's standards, shall be replaced at no additional cost to the owners or State/DTI. The replacement cable, connector, or part shall be tested after repairs have been made to verify compliance. Only equipment that meets the installation requirements stated herein shall meet the system's acceptance requirements.

E. Source Manufacturing/Quality Control

Cables that are supplied by the Contractor, and test outside of the factory test data by a margin of 10 percent on loss, may be deemed non-usable and returned to the manufacturer for replacement.

F. Physical Inspection

Prior to conducting any transmission testing, the following visual inspections will be performed:

1. Verify that all cable has been installed in full compliance with the proposal specifications.
2. Check for physical damage to the Fiber Distribution Panels and termination hardware.
3. Check that all cabling is properly jacketed, installation properly labeled at both ends of the cable, inner-duct and termination hardware is completed in all IDFs and the MDF Room.
4. Verify that all cable bends are within the manufacturer's specified bend radius.
5. Verify that all cabinets and racks (which require grounding) are properly grounded and comply with the National and Local Electrical Codes and State Standards for grounding.
6. Verify that the cables are properly approved and structurally supported for termination.
7. Verify that all Delaware Fire Code requirements have been met and satisfied.

G. DOCUMENTATION

Proper labeling and documentation will allow a technician to quickly trace a particular cable link and will significantly reduce the time and costs of moves, additions, changes, and troubleshooting. Both labeling and documentation depend on the use of a system-wide coding scheme that will identify and locate each component of the wiring system and allow all components to be linked in a logical fashion.

1. There are three components of wiring system documentation:
   - Labeling Communications/Data room/closet termination areas aids in identifying the source and function of a circuit.
   - A labeling scheme simplifies the documentation process.
   - "As built" documents provide a permanent record of the communications infrastructure. These documents are a critical management resource. As a result, it is imperative that "as built" documentation be prepared as part of the communications infrastructure project. In addition, these documents must be kept current

These standards are adopted by the Department of Technology and Information (DTI), through the Technology and Architecture Standards Committee (TASC), and are applicable to all Information Technology use throughout the State of Delaware. Any questions or comments should be directed to dti_tasc@state.de.us.

throughout the system's life cycle.

2. Termination Blocks

Labels on the connecting hardware should be coded based on the function of the terminated wiring. Colored designation strips are typically provided with a termination block.

3. Cable and Information Outlet Identification

The Contractor shall furnish and install cable tags labeled with identifying cable numbers mutually agreed upon with contractor and the Owner or Project Manager.

- The Contractor shall clearly and consistently mark the appropriate designation strip labels on all termination hardware mutually agreed upon with the Owner or Project Manager. Contractor will submit a sample of all designation labels for approval before installation.
- The Contractor shall affix outlet identification labels, machine printed or typed, with identifying cable numbers as shown on the attached drawings.
- Subsequent to pulling and terminating cables, the Contractor shall place the appropriate cable tags within six (6) inches of each end of each copper cable and eighteen (18) inches of each optical fiber cable end.
- If the cable tape becomes illegible or is removed at any time during the job, the
- Contractor shall immediately replace it with a duplicate preprinted cable tag.
- The Contractor shall provide the Owner or Project Manager with a listing of all cable identification numbers, keyed to cable types.
- Contractor will label each information outlet with the following labeling scheme: If the 1st floor IDF closet “A” is the origination point of the cable feeding workstation “007” the following is the configuration of the label to be installed:
- Floor- IDF Closet - Information Outlet Number
- Example: 1A-B101-01, 1A-B101-02, etc.
- Contractor will submit for approval a sample of all information outlet designation labels.

H. “As-Built” Documentation

Maintaining records and documents is the most important portion of the administration of a communications infrastructure. Maintenance and moves, additions, and changes can become very difficult if a current set of records and documents is not maintained. In fact, isolation and resolution of problems are often delayed because configuration information is either unavailable or outdated.

Subsequent to the installation and prior to acceptance, the Contractor shall prepare and issue As-Built drawings, in an AutoCAD format, that shall reflect the lengths of cables installed and the actual manner and conditions of installation, including all deletions from, additions to, or departures from the contract documents. These documents are to include the information outlet station numbers and cable routing where they vary from the original plan. A copy of these documents will be stored in the MDF, with a master copy located at the Owner or Project Manager.

I. Cable Management System

Wiring and equipment relationships must be maintained in a database or spreadsheet (depending on their complexity). The best approach is to use a third- party vendor's application for tracking cable management. These records contain comprehensive information about the users' communications configuration. The information will be very valuable in the support of long-term user-community communications requirements.

PART 20 APPENDIX A – COMMUNICATIONS PLANNING CHECKLIST

A. Not Used

PART 21 APPENDIX B - CABLE INSTALLATION CHECKLIST

A. Check Local Building Codes

The requirements stipulated by Section 800 of the National Electrical Code for Communications cable installations produce an orderly installation. However, it is important to consult your building inspector to determine whether there are special local requirements. Strapping requirements depend upon the building's design, State and Local Standards, and codes. Terminations can be made in standard junction boxes.

B. Coordinate with Other Contractors

Plan to install the cabling system in new buildings after the power wiring, air- handling ducts, and ceiling supports have been installed, but before the ceiling tiles are in place. This will prevent damage to the cable system during construction.

C. Plan the Job

On a blueprint, mark all terminations and desired routings, if known, to accommodate future building modifications.

D. Label the Cables

Label each cable reel and its free end according to the termination locations marked on your blueprint.

E. Pull Cable into Place

Deliver the cable from the bottom of each reel, making sure not to kink, crush, or pinch the cable. Pull groups of cables to a logical point and then fan out to the individual termination points. Arrange the cables neatly so they are easily identifiable for relocation. Separate the Communications cables from other cables by at least six inches and avoid sharp edges, tight bends, and locations that would subject the cable to abrasion, corrosion, or moisture. According to the National Electrical Code, low-voltage cables cannot share a tray with power cables. Running signal cables close to power cables may also cause hum pickup. If in doubt about cable locations, consult the standards or the Owner.

F. Remove Slack

Remove slack in lines by pulling the cables back to the wiring room and by adjusting their ceiling location as needed.

G. Label and Cut

Label each cable and then cut it off, making sure to leave enough cable to reach the termination panel.

H. Tie Cables Together

Use cable ties to bundle and secure parallel runs together. Place the ties at intervals sufficient to prevent sagging and to maintain neatness. Distances between ties may vary from six inches to four feet, depending on the size of the cables.

I. Strap the Cable

Use straps to fasten the tied cable bundles to hangers at 4-foot or other appropriate intervals. The distance between hangers will vary from 3 to 20 feet, depending upon the strapping surface, the type and number of cables in each bundle, State and Local Standards, and codes. Make sure to support the cables with hangers rather than pipes, conduit, or other structures in the building plenum. Do not use

These standards are adopted by the Department of Technology and Information (DTI), through the Technology and Architecture Standards Committee (TASC), and are applicable to all Information Technology use throughout the State of Delaware. Any questions or comments should be directed to dti_tasc@state.de.us.

straps that are too small for the cable diameter because they can cut or pinch the cable insulation.

J. Inspect the Job

Be sure that the cables are not resting on false ceilings or near electrical fixtures or sagging more than three inches from the point of the tie wrap.

PART 22 APPENDIX C - QUALITY ASSURANCE

A. All materials used shall bear the Underwriters' Laboratory, Inc. label, provided a standard has been established for the material in question.

B. All products and materials shall be new and unused, clean, and free of defects, damage, and corrosion.

PART 23 APPENDIX D - CODES, REGULATIONS AND STANDARDS

A. All installations and equipment shall be in compliance with, equal to or exceed the minimum requirements of OSHA, NEC, NEMA, IEEE, SAME, ANSI, UL, EIA, TIA recommendations and the rules, regulations and requirements of the Federal Communications Commission.

B. The installation shall comply fully with all applicable Local, County and State of Delaware laws and ordinances, regulations, and codes.

C. Local electrical and building codes in Delaware may be more restrictive than national codes, recommendations or practice. Follow the most restrictive code or recommendations.

D. Should any change in plans or Specifications be required to comply with governmental regulations, the Contractor shall notify the Owner or Architect/Engineer at the time of submitting the construction schedule.

PART 24 APPENDIX E - WARRANTY

Besides the manufacturer's extended warranty the Contractor shall submit a single Guarantee stating that all portions of the work are in accordance with Contract requirements and guaranteeing all work against faulty and improper material and workmanship, including work and materials of all subcontractors, manufacturers, suppliers, and sub trade specialists, for a period of one (1) year from date of final acceptance by the project manager, State/DTI, and Owner. Where guarantees or warranties for longer terms are provided, such longer terms shall apply. Within 24 hours after notification, the Contractor shall correct any deficiencies that occur during the guarantee period at no additional cost to Owner, all to the satisfaction of the Project Manager and or Owner.

When installed by a Certified Installer and used in a Structured Cable System, the manufacturer's extended warranty shall cover the installation for a period of 5 years against defects in material and workmanship. It shall also guarantee that it will support any current and future applications designed for Data transmission over the 100/500MHz link/channel, as defined in TIA/EIA 568A Communications Standard.

All move, add and change (MAC) activity shall be covered by the warranty provided it is performed by a Certified Installer.

PART 25 APPENDIX F - BID/QUOTE RESPONSE FORMAT

A. Not Used

PART 26 APPENDIX G —CERTIFIED CONTRACTOR LIST

http://contracts.delaware.gov/contracts_detail.asp?i=79

These standards are adopted by the Department of Technology and Information (DTI), through the Technology and Architecture Standards Committee (TASC), and are applicable to all Information Technology use throughout the State of Delaware. Any questions or comments should be directed to dti_tasc@state.de.us.

SECTION 27 41 16
INTEGRATED AUDIO-VIDEO SYSTEMS AND EQUIPMENT FOR CLASSROOMS

PART 1 - GENERAL

1.1 SUMMARY

A. Section Includes:

1. Stand-alone, networkable, scalable, one-room AV control and presentation system with user control panel. Available models support up to four audio inputs and four video inputs, and include user control panel, choice of amplifier/controller, ceiling or wall mounts, ceiling- or wall-mounted speakers, optional microphones for voice reinforcement, and AV interface cables required to integrate with a compatible video projector with screen. Local classroom software control from the teachers desktop, campus-wide scheduling, browser based remote room view/control interface, and management software are available.

B. Related Information:

1. Division 27 Section "Communications Horizontal Cabling" for communications cabling requirements for modular control system.

1.2 REFERENCES

A. National Fire Protection Association (NFPA):

1. NFPA 70 - National Electrical Code.
2. ANSI/TIA/EIA-588-C.0 – General Cabling Standards
3. ANSI/TIA/EIA-568-C.1 -- Commercial Building Cabling Standard
4. ANSI/TIA/EIA-568-C.2 -- Balanced Twisted Pair Cabling Standard
5. ANSI/BICSI 001-2009, Information Transport Systems Design Standard for K-12 Educational Institutions
6. ANSI S12.60:2002 Acoustic Performance Criteria, Design Requirements, Guidelines for Schools
7. ANSI/NECA/BICSI 568-2006, Standard for Installing Commercial Building Telecommunications Cabling
8. ANSI/TIA/EIA-569-B -- Commercial Building Standard for Telecommunications Pathways and Spaces
9. ISO/IEC 18010:2002 (2002) – Pathways and Spaces for Customer Premises Cabling
10. ANSI/TIA/EIA-606(A) -- The Administration Standard for the Telecommunications Infrastructure of Commercial Buildings
11. ISO/IEC 14763-1:1999 (1999) – Implementation and Operation of Customer Premises Cabling, Part 1 – Administration
12. J-STD-607-A -- Commercial Building Grounding and Bonding Requirements for Telecommunications
13. IEEE 1100 – IEEE Emerald Book

14. NFPA 780 Standard for the Installation of Lightning Protection
15. Cal/OSHA-Pocket Guide for the Construction Industry (recent edition)
16. BICSI -- Telecommunications Distribution Methods Manual (TDMM)
17. BICSI -- Information Transport Systems Installation Methods Manual
18. BICSI - AV Design Reference Manual
19. BICSI – Network Design Reference Manual
20. Federal Communications Commission
21. Federal, state, and local codes, rules, regulations, and ordinances governing the work

1.3 REFERENCES

A. ABBREVIATIONS

1. AV: Audio Visual.

1.4 SYSTEM DESCRIPTION

A. For each classroom, the Contractor shall furnish and install a complete, networkable, scalable AV control and presentation System. Each System shall include but not be limited to:

1. One control panel that meets or exceeds the specifications under section 2.B
2. One amplifer/controller core that meets or exceeds the specifications under section 2.C
3. Loudspeakers that meet or exceed the specifications under section 2.D
4. AV connection wall plates that meet or exceed the specifications under section 2.E and 2.F
5. One wireless receiver that meets or exceed the specifications under section 2.G, 2.K, and 2.L
6. One neck-worn teacher transmitter/microphone, including charger cradle, that meets or exceeds the specifications under sections 2.H and 2.J
7. One handheld student transmitter/microphone, including hands-free option and charger cradle, that meets or exceeds the specifications under sections 2.I and 2.J

B. The System is to include all equipment, materials, labor, and training as required to install and test a complete and operating System as described herein.

C. Contractor shall follow installation instructions provided by the manufacturer. Installation drawings shall show the location and general arrangement of equipment, electrical systems and related items. They shall be followed as closely as elements of the construction will permit.

D. Contractor shall examine the installation drawings and verify the conditions governing the work on the job site. Contractor shall arrange accordingly, providing such fittings, horizontal cable raceways, conduits, junction boxes and accessories as may be required to meet such conditions.

E. Deviations from the installation drawings, with the exception of minor changes in routing and other such incidental changes that do not affect the functioning or serviceability of the Systems, shall not be made without the written approval of the Engineer.

1.5 ACTION SUBMITTALS

A. Product Data: For each type of product required, demonstrating compliance with requirements.

B. Shop Drawings: Indicate the following:

1. Schematic diagram of controlled circuits and motorized equipment actuators.

C. Circuits and emergency circuits with capacity and phase, control zones, load type and voltage per circuit.

1.6 INFORMATIONAL SUBMITTALS

A. Sample of manufacturer's warranty.

1.7 CLOSEOUT SUBMITTALS

A. Operating and maintenance instructions.

1.8 QUALITY ASSURANCE

A. Manufacturer Qualification: Manufacturer of controller with minimum five years record of satisfactory manufacturing and support of components comparable to basis of design system.

B. Source Requirements: Provide control panel, amplifier/switch, loudspeaker, receiver, and microphone hardware and software through a single source from a single manufacturer.

C. All miscellaneous equipment required for a complete, professional installation shall be included in the base bid. No allowances for any additional equipment, hardware, cabling, or miscellaneous will be considered unless specifically excluded from the base bid.

D. All work materials shall be removed at the end of the work day and the work area left in the same condition as found.

E. The work herein specified shall be performed by fully competent workmen, in a thorough manner. All materials furnished by the Contractor shall be new, and all work shall be completed to the satisfaction of the Architect/Engineer.

F. All equipment shall be held firmly in place. This shall include speakers, receiver/amplifiers, cables, etc. Fastenings and supports shall be adequate to support their loads with a safety factor of at least three. All switches, connectors, outlets, etc., shall be clearly, logically, and permanently marked during installation.

G. The Contractor must take such precautions as are necessary to guard against electromagnetic and electrostatic hum and ground loops, to supply adequate ventilation, and to install the equipment so as to provide maximum safety to the person who operates it.

H. Care shall be exercised in wiring so as to avoid damage to the cables (e.g., stapling, pinching, excessive bending) and to the equipment. All joints and connections shall be made with lead-free rosin-core solder or with mechanical connectors approved by the Engineer. All wiring shall be executed in strict adherence to standard broadcast practices.

I. The Contractor shall be an established communications and electronics Contractor that has had and currently maintains a locally run and operated business for at least five years. The Contractor shall utilize a duly authorized reseller of the equipment supplied for this project location with full Manufacturer's warranty privileges.

J. The Contractor shall test the installed System according to the Manufacturer’s instructions and verify that the equipment has been installed properly and is functioning as designed.

K. Manufacturer Qualifications: Approved manufacturer of controller listed in this Section with minimum five years record of satisfactory manufacturing and support of components comparable to basis of design system.

1. Refer to Section 01 16 00 for Substitution Requirements – Any substitution request shall be submitted at least 10 days prior to scheduled bid opening. Any substitution requests submitted after that shall be denied.

2. Approval of Comparable Products: Submit the following in accordance with project substitution requirements, within time allowed for substitution review:

a. Product data indicating compliance with requirements of this Section.

b. Samples of each component.

c. Sample submittals from similar project.

d. Project references: Minimum of 5 completed installations, with Owner and Architect contact information.

e. Sample warranty.

3. Substitutions following award of contract are not allowed except as stipulated in Division 01 General Requirements.

4. Approved manufacturers must comply with separate requirements of Submittals Article.

L. Regulatory Requirements: Provide components and systems that comply with requirements of the following:

1. Refer to Section 1.2 A.

1.9 WARRANTY

A. Special Warranty: Manufacturer's standard form in which manufacturer agrees to repair or replace components of controls system that fail in materials or workmanship within the specified warranty period following substantial completion.

1. Warranty Period: Wireless transmitters, wireless receivers, infrared sensors, loudspeakers speakers, and charging stands: 5 years.

2. Warranty Period: Rechargeable batteries, power cords, power supplies: 1 year.

3. Warranty Period: Other components: 3 years.

B. Manufacturer's Extended Support Service: Extended telephone support: Unlimited period.

C. All warranties shall cover parts and labor.

PART 2 - PRODUCTS

2.1 MANUFACTURERS

A. Basis-of-Design Manufacturer: Subject to compliance with requirements, provide products of FrontRow Calypso LLC, Petaluma, CA 94954, Phone +1 707 227 0735, www.gofrontrow.com.

2.2 ROOM AV SYSTEM AND CONTROLLER

A. The System shall include:

1. One control panel that meets or exceeds the specifications under section 2.B
2. One amplifier/controller core that meets or exceeds the specifications under section 2.C
3. Loudspeakers that meet or exceed the specifications under section 2.D
4. AV connection wall plates that meet or exceed the specifications under section 2.E and 2.F
5. One wireless receiver that meets or exceed the specifications under section 2.G, 2.K, and 2.L
6. One neck-worn teacher transmitter/microphone, including charger cradle, that meets or exceeds the specifications under sections 2.H and 2.J
7. One handheld student transmitter/microphone, including hands-free option and charger cradle, that meets or exceeds the specifications under sections 2.I and 2.J

B. Control panel:

1. Basis specification: FrontRow CB-2000
2. Mounting: Single-gang, Leviton Decora® compatible
3. Buttons: 8 back-lit
4. Simultaneous control capacity: Unlimited network (IP addressable) devices, 2 bi-directional serial devices, plus 1 IR device or 1 GPI/relay
5. On-board scheduler: Yes
6. Security pass-code: Yes
7. Battery back-up: Yes
8. File-based cloning: Yes
9. Configuration: Via web-browser
10. I/O:
    i. 1x RJ-45 for IR and serial control, power
    ii. 1x RJ-45 for 10/100Mb network, power
11. Weight: 102g/3.6 oz
12. Power: 9V, 125 mA (via Cat 5)
13. Size: 5 x 4.4 x 12.7 cm/2 x 1.75 x 5 in

Or:

1. Basis specification: FrontRow CB-2050
2. Mounting: Dual-gang, Leviton Decora® compatible
3. Buttons: 8 back-lit
4. Volume: Digital rotary
5. Simultaneous control capacity: Unlimited network (IP addressable) devices, 2 bi-directional serial devices, plus 1 IR device or 1 GPI/relay

6. On-board scheduler: Yes
7. Security pass-code: Yes
8. Battery back-up: Yes
9. File-based cloning: Yes
10. Configuration: Via web-browser
11. I/O:
    i. 1x RJ-45 for IR and serial control, power
    ii. 1x RJ-45 for 10/100Mb network
12. Weight: 102g/3.6 oz
13. Power: 12VDC, 125mA (via Cat 5)
14. Size: 5 x 4.4 x 12.7 cm/2 x 1.75 x 5 in

C. Amplifier/Controller Core:

1. Basis specification: FrontRow Conductor™-ready Plenum Core, Conductor™-ready Wall Core, with FrontRow CM3000 amplifier/switch
2. Audio inputs:
    i. 1x streaming audio (3.5mm TRS) or RJ45 network connection
    ii. 4x analog stereo (3.5mm TRS, 1 RJ45)
    iii. Intercom (RJ45)
3. Audio outputs:
    i. 2x audio line out (3.5mm TS)
    ii. 1x streaming audio out (3.5mm TRS)
    iii. Intercom (RJ45)
4. Network support: 4 port 10/100Mb
    i. 2x +12VDC powered ports for network plus power
5. Digital Page-override: Yes (via Conductor)
6. Analog Page-override: Yes (via TB13)
7. Audio over IP: Yes
8. Speaker Load Impedance: 4 ohms min - 16 ohm max
9. Additional inputs: IR, GPI
10. Additional outputs: IR, COM (RS232 serial)
11. Amplifier Type: 92% efficient class D
12. Continuous Power @ 1% THD:
    i. 16 watts (rms) per channel @ 4 ohms

ii. 8 watts (rms) per channel @ 8 ohms

13. Power input requirements: 12VDC, 3.5A
14. Mounting: Plenum-rated enclosure

D. Loudspeakers (Wall Mounted):

1. Basis specification: FrontRow 202-05-000-00 IR Speaker Kit
2. Form: A single speaker enclosure containing two offset woofers and a centrally mounted tweeter, plus a centrally mounted, integrated IR receiving module
3. Mounting type: wall mount
4. Speaker power rating: 20 Watts RMS/30 Watts Max.
5. Speaker impedance: 4 Ohms nominal
6. Speaker frequency response: 150Hz -20kHz
7. Inputs:
   i. 2 quick connect/disconnect speaker cable terminals
   ii. 1 RCA sensor cable connector
8. Indicator: LED power
9. Mounting brackets: two 16 gauge steel mounting brackets with set screws
10. Sensor module receiving frequencies: 2.3MHz & 2.8Mhz
11. Sensor power: powered by receiver
12. Maximum sensor operating range: 18.5m/60 ft.line-of-sight
13. Maximum sensor reception area: 232m2/2500 ft2
14. Cable form: Single cable combining sensor and speaker cables
15. Maximum cable length: 15.25m/50ft
16. Cable type:
   i. Main jacket: UL listed, Plenum rated jacket
   ii. Sensor cable: RG58/u coaxial cable CL3P shielded, UL listed, Plenum rated jacket
   iii. Speaker cable: 18 AWG 2 conductor UL listed CL2P Plenum-rated
17. RoHS compliance: Combination sensor-speaker assembly, including cable, shall be manufactured using a lead-free process and be free of known hazardous metals and materials

E. Loudspeakers (Ceiling Mounted):

1. Basis specification: FrontRow 470-2856-125 Ceiling Speaker Kit and FrontRow 300-2176-120 Speaker Cable Kit
2. Mounting type: Ceiling mount
3. Speaker power rating: 30 Watts RMS/45 Watts Max.

4. Speaker impedance: 8 Ohms
5. Speaker frequency response: 60Hz-20kHz
6. Inputs: Quick connect/disconnect speaker terminals
7. Mounting mechanism: UL Listed Plenum Rated tile bridges and UL Listed Plenum Rated speaker enclosures
8. Cable type: 18 AWG 2 conductor UL listed CL2P or better plenum-rated
9. RoHS compliance: UL Listed Plenum Rated tile bridges and UL Listed Plenum Rated speaker enclosures shall be manufactured using a lead-free process and be free of known hazardous metals and materials

F. Analog Wall Plates:

1. Basis specification: FrontRow WP-PCAV
    a. Inputs: DB15 VGA, 3.5mm mini-TRS audio, RCA composite video, stereo RCA audio
    b. Profile: single-gang Decora® style wall plate with attached flying lead with locking 13-pin DIN connector
    c. Video resolution: UXGA (1600x1200)
    d. Cabling: Plenum-rated 50’ AV cable
        i. RoHS compliance: UL listed - shall be manufactured using a lead-free process and be free of known hazardous metals and materials
        ii. Input: 13-pin DIN locking connector
        iii. Output: DB15 VGA, 3.5mm mini-TRS audio, RCA composite video, stereo RCA audio
        iv. Width: Fits through ¾” conduit

G. Digital Wall Plates – HDMI:

1. HDMI extender
    a. Profile: single-gang Decora™ style wall plate transmitter with HDMI type A female input connector, LED power indicator
    b. I/O:
        i. 2x RJ45 connectors on transmitter
        ii. 2x RJ45 connectors on receiver
    c. Input HDMI cable distance: ≤10FT
    d. Output HDMI cable distance: ≤10FT
    e. Total HDMI signal length 75’ (HDMI cables + CAT5/6)
    f. Power: +5VDC 300mA available line power (powered at receiver end)
    g. PC resolution: up to UXGA (1600 x 1200)
    h. Digital video resolution: 480i, 480p, 576i, 576p, 720p, 1080i, 1080p

i. Compliance: HDMI 1.3b, HDCP

2. HDMI audio de-embedder
   a. Formats: Digital 2.0CH/5.1CH LPCM, Dolby Digital, or DTS audio
   b. Input: HDMI type A female
   c. Output: Stereo 3.5mm analog, HDMI type A female
   d. Power: +5VDC, 200mA
   e. Regulatory: FCC, CE, UL
   f. Power consumption (max): 1W
3. Cable type: 2x 50’ plenum-rated Cat5e/6 UTP
   a. RoHS: UL listed - shall be manufactured using a lead-free process and be free of known hazardous metals and materials

H. Wireless Receiver:
   1. Basis specification: FrontRow 5201R Symbio
   2. Receiver frequency: 2.3MHz & 2.8MHz (2 simultaneous channels)
   3. Operating range: 18.5m/60ft line-of-sight (typical)
   4. Frequency Response: 50Hz to 10kHz
   5. THD: < 1% @ 1kHz
   6. Signal to Noise: > 65dB (system)
   7. Power Supply: +12VDC, 300mA
   8. Mic level out: 0V to 100mVrms at maximum volume & maximum deviation, typical
   9. Line level out: 0V to 1Vrms at maximum volume & maximum deviation, typical
   10. Size (wxhxd): 14 x 3.8 x 18 cm/5.5 x 1.5 x 7 in
   11. Weight: 766g/1.7lbs.
   12. Controls:
      i. Power
      ii. Two microphone volume controls (channel A and channel B)
   13. Signal-to-noise from microphone to speaker output (including audio circuitry): >65dB
   14. Reception area: 163m²/1225ft²
   15. Reception angle: 130° x 60°
   16. External sensor ports: 3, RCA
   17. The Wireless Microphone System shall be manufactured using a lead-free process and be free of hazardous metals and materials (RoHS compliant)
   18. The Wireless Microphone System receiver shall be UL listed

I. Teacher Transmitter/Microphone:

1. Basis specification: FrontRow 940TM Pendant Microphone
2. Transmission type: infrared
3. Number of switchable channels: 2
4. Transmitting frequencies: 2.3MHz & 2.8MHz
5. Number of built-in microphones: 2
6. Microphone type: uni-directional cardioid
7. Number of batteries required for operation: 1
8. Minimum battery life: 8 hours
9. Battery type: AA 2300mAh rechargeable NiMH or alkaline (1.5V)
10. Minimum operating range: 18.5m/60ft line of sight
11. Wearing style: Around the neck (pendant)
12. Maximum dimensions: 11 x 6 x 2.5 cm/4.5 x 2.5 x 0.9 in
13. Maximum weight: 85g/3oz (with battery)
14. Charge protection (prevents damage from accidentally recharging alkaline batteries): Yes
15. Drop-in charger available: Yes
16. User controls:
    i. Mute switch: Large, positioned on front
    ii. On/off
    iii. Channel selector
17. Inputs/outputs:
    i. 2.5mm optional external mic input
    ii. 3.5mm stereo summing auxiliary input
    iii. 1.3mm DC charge jack
18. Indicator: LED for power on, low battery, charge, and mute
19. RoHS compliance: The transmitter shall be manufactured using a lead-free process and be free of hazardous metals and materials
20. UL listing: The transmitter/microphone shall be UL listed

J. Student Transmitter/Microphone:

1. Basis specification: FrontRow 950H Pass-Around Microphone
2. Transmission type: infrared
3. Number of swtichable channels: 2

4. Transmitting frequencies: 2.3MHz & 2.8MHz
5. Number of batteries required for operation: 1
6. Minimum battery life: 5 hours
7. Battery type: AA 2300mAh rechargeable NiMH or alkaline (1.5V)
8. Minimum operating range: 12.2m/40ft line of sight
9. Wearing style: Handheld or around the neck (must include hands-free option)
10. Maximum weight: 73.7g/2.6oz (with battery)
11. Maximum dimensions: 14.6 x 2.8 x 3.5 cm/5.7 x 1.1 x 1.4 in
12. Charge protection (prevents damage from accidentally recharging alkaline batteries): Yes
13. Drop-in charger included: Yes
14. User controls:
    i. On/off
    ii. Channel selector (inside battery compartment)
    iii. 3-position mic gain (inside battery compartment)
15. Inputs/outputs
    i. 3.5mm stereo summing auxiliary input
    ii. 1.3mm DC charge jack
16. Indicator: LED for power on, low battery, charge
17. RoHS compliance: The transmitter shall be manufactured using a lead-free process and be free of hazardous metals and materials
18. UL listing: The transmitter/microphone shall be UL listed

K. Charging Cradle

1. Basis specification: FrontRow 950C Charger
2. Number of charging pockets: 2 (one for teacher transmitter/microphone and one for student transmitter/microphone)
3. Energy Star qualified: The charging cradle shall be Energy Star qualified and meet ENERGY STAR® Eligibility Criteria for Products with Battery Charging Systems (BCSs)
4. Indicators: One LED for each pocket indicating charging, battery fault, and charge complete
5. RoHS compliance: The charging cradle shall be manufactured using a lead-free process and be free of hazardous metals and materials
6. UL listing: The charging cradle shall be UL listed

L. External Ceiling Sensor

1. Basis specification: FrontRow 204-01-006-00 Ceiling Sensor Kit

2. Indicator: LED power
3. Mounting type: Drop ceiling acoustic tile or sheetrock ceiling
4. Sensor module receiving frequencies: 2.3MHz & 2.8Mhz
5. Sensor power: powered by receiver
6. Minimum sensor operating range: 18.5m/60 ft.line-of-sight
7. Minimum sensor reception area: 232m2/2500 ft2
8. Minimum cable length: 15.25m/50ft
9. Cable type: RG58/u coaxial cable CL3P shielded, UL listed, Plenum rated jacket
10. RoHS compliance: Must be manufactured using a lead-free process and be free of known hazardous metals and materials
11. UL listing: The ceiling sensor shall be UL listed

PART 3 - EXECUTION

3.1 EXAMINATION

A. Prior to installation, examine work area to verify measurements, and that commencing installation complies with manufacturer's requirements.

3.2 INSTALLATION

A. Comply with requirements of Division 27 Sections "Common Work Results for Communications."

B. Do not install AV or control devices until space is enclosed, HVAC systems are running, and overhead and wet work in work space are complete.

C. Install control devices in accordance with manufacturer's instructions.

D. Install speakers in accordance with manufacturer's instructions.

E. Install projector and mount in accordance with manufacturer's instructions.

F. Grounding: Provide electrical grounding in accordance with NFPA 70.

G. Perform setup for each audio-visual equipment component.

3.3 SYSTEM STARTUP

A. Provide system startup and adjustment to occupied conditions in accordance with manufacturer's recommendations.

B. Perform operational testing to verify compliance with Specifications. Adjust as required.

3.4 CLOSEOUT ACTIVITIES

A. Demonstration: The Contractor shall demonstrate the System to operate in accordance with the requirements of these specifications as well as the Manufacturer’s performance specifications. The test shall be performed in the presence of an authorized representative of the Owner.

B. Should such a demonstration of performance show that the Contractor has not properly installed the System, the Contractor shall make all commercially reasonable changes or adjustments at no additional cost to the Owner.

C. Training: Train Owner's personnel to operate, maintain, and program AV controls. Contractor shall provide manufacturer’s representative and contractor representative for training. Contractor and Manufacture representatives shall provide training for a minimum of one day to Owner selected personnel.

END OF SECTION

Section 27 51 17
Public Address System

PART 1 - GENERAL

1.0 DESCRIPTION

A. The Contractor shall furnish and install all equipment including, but not limited to, outlet boxes, wiring, speakers, and all other necessary equipment to provide a complete operating system as indicated with the contract documents. Provide all necessary wall plates, specialty boxes, etc., not provided by others.

B. Valcom Class Connection™ Talback Intercom System M/N VE72TR-5, shall be considered as the base bid. The specifying authority must approve alternate systems. Alternate bidders supplying another system shall make aware their intentions and provide all information, including catalog cuts, shop and working drawings, data sheets and a demonstration of the proposed system features. This information must be presented to the relative parties as to allow sufficient time to review all material. This should be accomplished at least 10 (ten) days prior to the bid date.

C. The intent of this specification is to maximize communications between the classroom and administrative areas while enhancing school safety and reducing maintenance and operational cost.

D. Under this specification, the system shall provide a complete Communication System for the Administrative, Classroom, Cafeteria, Library, and Recreational areas.

E. The Communication System shall provide distribution of intercom, overhead paging, emergency paging, class change time tones, and emergency tones and program material and on board emergency messaging.

F. The Communication System shall feature the capability to operate a system of cameras such that visual and audible communication may be synchronized.

1.1. RESPONSIBILITIES

A. Contract documents are detailed only to the extent required to show design intent. It shall be understood and agreed upon by the Contractor that all work described herein shall be complete in every detail.

B. Furnish additional items not mentioned herein to meet requirements as specified without claim for additional payments. Items, may include hardware, rack panels, 66Blocks etc., and other devices that are required for installation.

C. Labor furnished shall be trained and experienced in telecommunication systems.

D. All equipment unless otherwise specified, shall be new, free from defects, and the best craftsmanship in its class.

E. All manufactured equipment shall be installed as recommended by the manufacturers, or as indicated in their published installation manual.

F. Furnish and install necessary equipment, backboxes, supports and enclosures.

G. Furnish and install all necessary wire.

H. Furnish shop drawings.

I. Perform initial programming of system and audio level adjustments.

J. Perform final programming of system and audio level adjustments.

K. Provide system documentation including equipment manuals and drawings.

L. Guarantee all equipment and components for their specified period from date of acceptance.

M. Provide information on system requirements to any Contractor responsible for supplying related materials for this system.

N. System must be U.L. 813 and FCC Part 15 listed for safety reasons. Systems not listed as above shall not be acceptable.

1.2. SUBMITTALS

A. See Section 01 13 00 – Administrative Requirements, for submittal procedures.

B. Submit layout drawings of the communication system and all components.

C. Submit drawings of control equipment showing all major components and positions in the rack.

D. Provide block diagrams showing components and relative connections.

E. Test Reports: Indicate satisfactory completion of each test recommended by the manufacturer.

F. Manufacturer's Installation Instructions: Indicate application conditions and limitations of use stipulated by product testing agency. Include instructions for storage, handling, protection, examination, preparation, installation, and starting of product.

G. Manufacturer's Certificate: Certify that products meet or exceed specified requirements.

H. Submit a certificate showing a completion of installation, programming, and service training from the system manufacturer.

I. Operation Data: Include instructions for adjusting, operating, and extending the system.

J. Maintenance Data: Include repair procedures and spare parts documentation.

K. Submit data sheets on equipment provided.

1.3. QUALIFICATIONS

A. The Contractor shall be an established and local company providing solutions to the school market for a minimum of 3 (three) years with Telecom/Data/Sound Experience. The Contractor shall have service facilities within 30 miles of Project.

B. The Contractor shall maintain an adequate parts inventory to perform necessary service and upgrades.

C. Products: Furnish products listed and classified by Underwriters Laboratories, Inc. as suitable for purpose specified and stated.

1.4. WARRANTY

A. The Contractor shall provide a 12 (twelve)-month warranty. The warranty shall cover parts and labor. Warrantee period shall begin on the date of acceptance by the Owner or Architect/engineer.

1.5. PLEDGE OF QUALITY

A. The Contractor shall be an authorized dealer of the supplied equipment with full warranty privileges.

B. The Contractor must have attended the Manufacturers' Training Program and be an authorized Class Connection Distributor.

C. The Contractor shall inventory the necessary parts in order to maintain and service the equipment being supplied. This equipment inventory level shall be in direct proportion to total systems installed as recommended by the manufacture.

D. The Contractor shall provide complete drawings detailing all interconnections, panel wiring diagrams, and specification sheets.

1.6. IN-SERVICE TRAINING

A. The Contractor shall furnish in-service training with the system. The sessions shall facilitate the training of personnel in operating classroom equipment, administrative equipment, program distribution, and user programming functions. System specific customized user manuals shall be provided at the time of training. Provide a minimum of one day of training.

1.7. WIRING

A. Wiring shall be in accordance with the Manufacturer's specifications. Wiring shall meet all local and state codes. All wiring shall be ground and short tested.

1.8. COMMUNICATION SYSTEM

The Communication System shall provide at least the following functions and features:

A. Direct dialed, hands-free, two-way communication from all administrative telephones to any location equipped with a talkback speaker.

B. Automatic gain control on intercom speech to assure constant talkback speech level.

C. Microprocessor based system capable of handling up to 720 points (seven hundred twenty). A point is defined as a call-in switch or a speaker output.

D. System shall be modular in design and capable of expanding in increments of 48 points allowing for budget flexibility and expandability.

E. System shall interface with any telephone system, thus allowing the school(s) to upgrade or replace their telephone system without suffering a requirement to replace, or lose any feature of, their internal communications (intercom) system. Any system that limits system features based upon any selected telephone system, and/or is proprietary to one or only a few telephone systems shall not be acceptable.

F. Automatically sound a tone or play a pre-page WAV file over any loudspeaker connected for two-way communication to alert the classroom teacher that this two-way call has been established. This is intended to prevent unauthorized monitoring. The privacy tone must repeat every 15 (fifteen) seconds.

G. Distribution of emergency announcement(s) from any authorized telephone to all areas furnished with a loudspeaker. Emergency announcements shall have the highest system priority.

H. Distribution of general announcements from any administrative telephone, staff telephone, or classroom telephone. The system shall be capable of providing all-call, group calls, multiple group call, or dial-on-the-fly page groups.

I. Classroom speakers shall be software assignable to any or all of 72 (seventy-two) audio paging/distribution groups.

J. Provide the ability to define and archive unlimited time tone schedules with up to 255 events per schedule. Each scheduled event shall be capable of controlling any one of 6 (six) internal tones; user selected custom audio/voice phrases, audio from any of 3 auxiliary sources or up to 40 relays for building control. Each scheduled audio event shall be distributable to up to 72 audio groups. The system shall feature the ability to automatically initiate up to 8 schedules per day, based upon the day of the week or calendar dates up to one year in advance. Up to 8 daily schedules shall operate simultaneously. Music distribution, control relay activation, paging & class change grouping and time schedule administration, modification and creation functions must be available through administration PC software. Systems that do not allow the school to manage their own audio groups and schedules with PC software

or do not offer calendar based scheduling up to one year in advance or require separate page and time groups shall not be acceptable.

K. Provide 1, 2, 3 or 4 digits numbering plan, thus allowing the classroom speaker and the classroom telephone to be the same architectural number.

L. Provide facilities for up to 7 (seven) call-in priority levels. Each classroom call button shall be assignable to any one or two of these priority levels. The call button priority levels shall have the capacity to change state on a time of day basis. The priority levels shall be as follows:

1) Normal
2) Security
3) Normal/Emergency
4) Urgent/Emergency
5) Overhead Ring
6) Emergency Only
7) Ignore

M. Call button priority levels shall determine call queue placement. Emergency calls will be answered first; urgent calls second and normal calls last.

N. System shall be capable of placing intercoms call on hold in order to perform other administrative functions.

O. Any classroom/area loudspeaker must have the flexibility to be programmed as a testing room. A testing room shall be excluded from receiving general announcements, class change tones, group announcements and program material. The testing room must receive emergency tones and announcements. A dial code must be provided that will access these testing rooms at the same time, allowing for an announcement to the testing rooms for applications such as standardized testing. The testing rooms may be reactivated to normal operation at any time by the administration staff as needed. Testing rooms shall automatically be reset to normal operation before start of class the next day.

P. Programmable features shall be stored in non-volatile memory and shall not be lost due to power failures.

Q. Classroom initiated intercom calls must be able to be assigned to ring at specific administrative ports. These administrative ports shall have the flexibility to be forwarded to other administrative ports should a call go unanswered or should the assigned administrative port be busy.

R. Facilities to annunciate incoming intercom calls at multiple administrative phones simultaneously. Calls may be answered from any of the administrative telephones by simply lifting handset, dialing the room number or pressing a button on the telephone. Once answered, the call will automatically be cancelled for other administrative phones.

S. System functionality must include the capability to manually distribute up to 5 (five) alert emergency tones via pushbuttons, contact closure, or dial up tones from any

administrative telephone. These tones shall be customizable with respect to cadence, type and duration. Dial up tones must only be accessible by authorized users.

T. The system must provide a minimum of 4 (four) ports to be connected to the telephone system from the intercom system. These 4 (four) intercom lines shall provide built-in Enhanced Caller Line Identification which will visually announce the name of the teacher or location, the architectural classroom number, and the status of the call-in level; thus allowing interfacing to any telephone system. Systems that require integration to a specific telephone system or systems in order to offer any system feature shall not be acceptable.

U. The system shall have the ability to control all system relays. Relays shall be controlled through the administrative software, DTMF controlled, automatically cycle at a programmed time of day, follow time schedule events, follow audio group events, follow security calls, and follow emergency and ADA calls. All relays must be software programmable with the flexibility to change as required. A minimum of eight (8) relays shall be provided.

V. The system shall provide at least three simultaneously operating, non-restrictive program distribution channels. The audio program material shall be controlled and distributed with administration PC software allowing simple and easy changes. Systems that require manual operated switch-banks or cumbersome DTMF telephone codes for distribution shall not be acceptable.

W. The Communication System shall feature voice call progress. When 2 or more system users attempt to announce into the same area, the unsuccessful user shall be notified via a voice message. When a user's announcement attempt is overridden by a higher priority announcement, the overridden user shall be notified via a voice message.

X. The system shall have the ability to store up to 60 minutes of WAV files directly onto the CPU and shall not be lost due to power outage.

1)The WAV files shall be activated via the Administration Software, Telephone and/or Telephone system, and/or pushbuttons.

2)The WAV files shall be programmable as to what level of priority they can be broadcast. They shall be programmable as to override any class change tones, normal all call, music, and intercom in the event of an emergency.

3)The WAV files shall also have the ability to be broadcast into any one or all of the 72 audio groups as well to any zone within the system.

4)The WAV files shall be have the ability to be broadcast via a schedule for any day of the week or time of the day. They shall also have the ability to be broadcast for any duration of time and repeat number of plays with the ability to select how long the duration is between each repeated broadcast.

5)The WAV files shall be able to be broadcast via a pushbutton. When this pushbutton is activated it shall be programmable to select which WAV file is

broadcast, the priority level, where it is broadcast, and how many times it shall play.

6)The WAV files shall also have the ability to be a part of the class change tones within the system. These files shall be able to replace any tone within the class change schedules as to offer the flexibility of customizable tones and or phrases in this class change mode.

7)The WAV files shall be programmable as to replace the hands-free alert tone, repeated alert tone, or the all call alert tones.

.

PART 2 - PRODUCTS

2.0 INTERCOM CONTROL UNIT

A. Shall be capable of expanding to 720 (seven hundred twenty) points. A point is defined as a call-in switch or speaker output.

B. Provide pre-alert tone to classroom for intercom calls and general announcements.

C. Ability to program and control the built-in master clock with unlimited events and unlimited time schedules with multiple audio groups.

D. Ability to control wireless or wired clocks (various correction methods).

E. Ability to produce user defined tone signals for time tones or emergency tones.

F. Ability to select the tone on an all-call basis from any, or selected, administrative telephones.

G. Provide an RS-232 and Ethernet port, which will give ability to monitor operations and functions of the systems.

H. Provide off-site programming and diagnostics of the system. It shall also be capable of determining basic circuit faults.

I. The system shall be capable of simultaneous conversations between administrative ports.

J. The system shall have a Windows® based PC administration programming tool which allows the administrative personnel to easily manage Audio Sources, Class Change schedules, paging groups, time updates, holiday schedules and day/night mode operation from their desktop PC across a standard Ethernet LAN. It shall also have the ability to activate on board WAV files on a schedule and/or immediately in the event of an emergency at the highest priority override level. Systems that require propriety consoles, special LCD displays or solely utilize DTMF for changes to perform these functions shall not be acceptable.

K. System shall provide calendar based scheduling up to one year in advance.

L. The system shall be programmable via Ethernet or direct COM port cable connection.

M. System shall be capable of utilizing 45 (forty-five) ohm or 25-volt speakers for classroom type speakers. Systems that require re-tapping existing classroom 25-volt speakers shall not be acceptable.

N. System speakers shall be capable of utilizing standard CAT 3 (three), CAT 5 (five), or 6 (six) telephone/data wiring for installation. The speakers and call buttons shall be capable of utilizing spare pairs in the telephone wire connected to the classroom, allowing for lower installation cost. Systems that waste infrastructure by requiring separate heavy gauge infrastructure wire shall not be acceptable.

O. Provide 8 (eight) unrestricted simultaneous audio paths for communication between administrative phones, program material, time tone distribution, and paging. Systems that do not allow simultaneous pages to different paging groups will not be accepted.

P. Provide 6 (six) software programmable pushbutton inputs that can be used to activate tones, emergency tones, time tones, schedules, set system time, force a holiday schedule, door entry, etc.

Q. Provide 8 (eight) software programmable output contact closures which can be activated manually to turn on cameras, unlock doors, emergency lockdown, etc., or automatically via Master Time Control Center.

R. Provide voice-synthesized call-in, which allows the administrative telephones to hear the incoming intercom call's room number over the handset.

S. Provide call confirmation tone at speaker when an intercom call is placed. This verifies that the call has been placed in queue. If the call is upgraded to an emergency, a second confirmation tone shall be activated.

T. Automatically announce the architectural room number over any one, group, or all speakers if an emergency call-in from a classroom goes unanswered for a programmable period of time. Systems that do not announce emergency call-ins shall not be acceptable.

U. Provide Emergency Override On Board Voice Messaging via the following methods:
   Any authorized PC on the schools LAN/WAN
   Any authorized telephone
   Any pushbutton

2.1. SPEAKERS/CALL SWITCHES

2x2 Talkback Lay in Speaker – Valcom M/N VECTLA-2 or approved equal
   Cone Diameter: 8"
   Voice coil impedance: 45 Ohms
   Power Handling: 12 Watts
   Frequency response: 80Hz to 15Khz

Steel Housing with a white baked on acrylic enamel finish

Wall Talkback Speaker – Valcom V-WTGY or approved equal
Cone Diameter: 8”
Voice coil impedance: 45 Ohms
Power Handling: 12 Watts
Frequency response: 80Hz to 15Khz
Gray Metal enamel finish with Black cloth grill

2x2 Paging Speaker – Valcom – VE9022A-2 or approved equal
Cone Diameter: 8”
Input Impedance: 600 ohms
Power Requirements: 50mA @ 24 VDC
Frequency response: 80Hz to 15Khz
Steel Housing with a white baked on acrylic enamel finish

Wall Paging Speaker – Valcom – V-1052C or approved equal
Cone Diameter: 8”
Input Impedance: 600 ohms
Power Requirements: 50mA @ 24 VDC
Frequency response: 80Hz to 15Khz
Gray Metal enamel finish with Black cloth grill

Paging Loudspeaker (Weather Resistant) – Valcom V-1036CGY or approved equal
Cone Diameter: 8”
Input Impedance: 600 ohms
Power Requirements: 300mA @ 24 VDC
Frequency response: 275Hz to 15Khz
High impact grey ABS Plastic

2.2. WIRING

A. All wiring shall be listed for the intended purpose. The intercom shall use CAT 3 (three) UTP U.L. listed cable. All two way speakers shall be homerun.

B. All interior wiring shall be in accordance with new construction guidelines suggested by the Manufacturer; including the speaker.

2.3. INSTALLATION

A. Complete system shall be installed in accordance with Manufacturer’s recommendations.

B. All wiring shall be installed in raceways or plenum rated cable where routed in plenum ceiling areas.

2.4. PROTECTION

A. The contractor shall provide all necessary protection on the AC power feed and on all station lines leaving/entering the building.

B. The contractor shall note in his system drawings, the type of protection devices and all relative information.

3.0 INSTALLATION

A. Install in accordance with manufacturer's instructions

B. Leave 18 inches excess cable at each termination at speaker and other system outlets

C. Leave 3 feet excess cable at each termination at system cabinet

D. Support cables above accessible ceilings to keep them from resting on ceiling tiles. Use J hooks to support cables from structure for ceiling suspension system.

E. Ground and bond equipment and circuits in accordance with manufacturer's recommendations and instructions.

End of Section

INTERACTIVE LED TOUCH SCREEN W/WIRELESS CONNECTION COMBO AND HEIGHT ADJUSTABLE MOUNT
SPECIFICATION ADDED IN FIELD BULLETIN #6

Interactive LED Touch Screen "ILTS" Quomo Journey QIT1065 or approved equal

Interactive Touch Screen must meet the following specifications:

Interactive panel LED backlit 65" display
Resolution no less than 1920 x 1080p
Contrast ratio no less than 4000:1
Response time = to or < than 5.5ms
Display ratio of 16:9
Two 10W speakers
Minimum of 4 points of interactive touch
Cursor speed no less than 120 points/second
Touch should be both stylus or finger capable
Connect wirelessly with TWP1000

USB Media Play Port support:	JPEG, BMP, PNG, MPEG1, MPEG2, MPEG4, H264, RM, RMVB, MOV, MJPEG, VCI, Divx, FLV, WMA, MP3, M4A, (AAC)
Inputs	Frame USB port x3 HDMI x2 S-Video x1 Audio x2 VGA x1 PC audio x1 AV x1 RS232 x1
Outputs	AV x1 SPDIF x1 VGA x1

Quomo TWP1000 QConnect or approved equal (To be provided with each ILTS)

Wireless presentation must meet the following specifications:

Customize wifi name
Connect multiple QConnects or approved equal at once
View up to 4 screens at once
Connect up to 30 devices
Wireless annotation
Control computer screen from mobile device

STANDARDS	IEEE 802.11b/g/n 2.4GHz IEEE 802.3(10BASE-T) / IEEE 802.3u(100BASE-TX)
WIRELESS CHANNEL	11(US, Canada); 3(Europe); 14(Japan)
DATA RATE	Wireless: Up to 300Mbps; LAN: 10/100Mbps
PROTOCOL	TCP/IP
IP CONFIG	Automatic: DHCP; Manual: Static IP address
MANAGEMENT	Web-based configuration, SNMP
SECTURITY	IEEE Standard 64/128 bit WEP / WPA / WPA2-PSK
ANTENNA	Dipole 2dBi x 2
RECEIVER SENSITIVITY	11b: <-80dBm @ 11Mbps 11g: <-70dBm @ 54Mbps 11n: <-64dBm @ 802.11n (HT20)
WIRELESS LINK COVERAGE	Up to 300 feet/100 meters, depends on environment
SUPPORTED OUTPUT RESOLUTION	VGA: SVGA (800x600) / XGA (1024x768) / WXGA (1280x768) / WXGA (1280x800) / WXGA (1360x768) / WXGA+ (1440x900) / UXGA (1600x1200) HDMI: 720 (1280x720) / 1080 (1920x1080)
SUPPORTED ACCOUNT RIGHTS	Administrators, Limited User, Guest
SUPPORTED OPERATION SYSTEM	Windows XP / Vista / 7, Mac OS X 10.5 and above WiFi-Doc & SidePad: Android 2.2 & above, iPad / iPhone OS 3.2 & above
POWER	External Power Adaptor 5V DC input 2.6A
INTERFACE	15Pin VGA HDMI RJ-45 USB 2.0 (x3) Power Button Reset Button Stereo Phone Jack
LED	Power Dimension (LxWxH): 154 x 50.7 x 24mm Weight: 238g

<u>Height Adjustable Wall Mount Mooreco iTeach M/N 27678 or approved equal (To be provided with each ILTS)</u>

Adjustable mount must meet the following specifications:

Construction	UL listed and approved 18" of height adjustment TAA compliant Capacity up to 170lbs
Mounting options	Adjustable mounting tabs
Finish	Powder coated

Warranties:

Note: All warranties shall start on date of substantial completion.
Provide a 3 year warranty on panel. Warranty shall include coverage for parts and labor.
Provide a 1 year warranty on QConnect. Warranty shall include coverage for parts and labor.
Provide a 1 year warranty on the adjustable wall mount. Warranty shall include parts and labor.

Training:

Contractor shall provide 3 days of onsite training for classroom teachers and district staff, inclusive

Additional Requirements:

Must be Bid by a Qomo or approved equal authorized education dealer
Installation of all products shall be by an experienced Qomo or approved equal panel installer

SECTION 28 31 00

FIRE DETECTION AND ALARM

PART 1 GENERAL

1.01 SECTION INCLUDES

A. Fire alarm system design and installation, including all components, wiring, and conduit.

B. Transmitters for communication with supervising station.

C. Circuits from protected premises to supervising station, including conduit.

D. Replacement and removal of existing fire alarm system components, wiring, and conduit indicated.

E. Maintenance of fire alarm system under contract for specified warranty period.

1.02 RELATED REQUIREMENTS

A. Section 07 84 00 - Firestopping: Materials and methods for work to be performed by this installer.

B. Section 08 71 00 - Door Hardware: Electrically operated locks and door holder devices to be monitored and released by fire alarm system.

C. Section 21 30 00 - Fire Pumps: Supervisory devices.

D. Section 21 13 00 - Fire-Suppression Sprinkler Systems: Supervisory, alarm, and actuating devices installed in sprinkler system.

E. Section 14 20 10 - Passenger Elevators: Elevator systems monitored and controlled by fire alarm system.

F. Section 23 33 00 - Air Duct Accessories: Smoke dampers monitored and controlled by fire alarm system.

1.03 REFERENCE STANDARDS

A. 36 CFR 1191 - Americans with Disabilities Act Accessibility Guidelines for Buildings and Facilities; Final Rule; (ADA Standards for Accessible Design).

B. IEEE C62.41.2 - Recommended Practice on Characterization of Surges in Low-Voltage (1000 V and Less) AC Power Circuits.

C. NFPA 70 - National Electrical Code.

D. NFPA 72 - National Fire Alarm Code and Signaling Code.

1.04 SUBMITTALS

A. See Section 01 30 00 - Administrative Requirements, for submittal procedures.

B. Drawings must be prepared using AutoCAD Release 11_.
   1. Red Clay Consolidated School District will provide floor plan drawings for Contractor's use; verify all dimensions on Red Clay Consolidated School District-provided drawings.

C. Evidence of designer qualifications.

D. Design Documents: Submit all information required for plan review and permitting by authorities having jurisdiction, including but not limited to floor plans, riser diagrams, and description of operation:
   1. Copy (if any) of list of data required by authority having jurisdiction.
   2. NFPA 72 "Record of Completion", filled out to the extent known at the time.
   3. Clear and concise description of operation, with input/output matrix similar to that shown in NFPA 72 Appendix A-7-5-2.2(9), and complete listing of software required.
   4. System zone boundaries and interfaces to fire safety systems.
   5. Location of all components, circuits, and raceways; mark components with identifiers used in control unit programming.
   6. Circuit layouts; number, size, and type of raceways and conductors; conduit fill calculations; spare capacity calculations; notification appliance circuit voltage drop calculations.
   7. List of all devices on each signaling line circuit, with spare capacity indicated.
   8. Manufacturer's detailed data sheet for each component, including wiring diagrams, installation instructions, and circuit length limitations.
   9. Description of power supplies; if secondary power is by battery include calculations demonstrating adequate battery power.
   10. Certification by either the manufacturer of the control unit or by the manufacturer of each other component that the components are compatible with the control unit.
   11. Certification by the manufacturer of the control unit that the system design complies with the contract documents.
   12. Certification by Contractor that the system design complies with the contract documents.
   13. Do not show existing components to be removed.

E. Evidence of installer qualifications.

F. Evidence of instructor qualifications; training lesson plan outline.

G. Evidence of maintenance contractor qualifications, if different from installer.

H. Inspection and Test Reports:
   1. Submit inspection and test plan prior to closeout demonstration.
   2. Submit documentation of satisfactory inspections and tests.
   3. Submit NFPA 72 "Inspection and Test Form," filled out.

I. Operating and Maintenance Data: See Section 01 78 00 for additional requirements; revise and resubmit until acceptable; have one set available during closeout demonstration:
   1. Complete set of specified design documents, as approved by authority having jurisdiction.
   2. Additional printed set of project record documents and closeout documents, bound or filed in same manuals.
   3. Contact information for firm that will be providing contract maintenance and trouble call-back service.
   4. List of recommended spare parts, tools, and instruments for testing.
   5. Replacement parts list with current prices, and source of supply.
   6. Detailed troubleshooting guide and large scale input/output matrix.
   7. Preventive maintenance, inspection, and testing schedule complying with NFPA 72; provide printed copy and computer format acceptable to Red Clay Consolidated School District.
   8. Detailed but easy to read explanation of procedures to be taken by non-technical administrative personnel in the event of system trouble, when routine testing is being conducted, for fire drills, and when entering into contracts for remodeling.

J. Project Record Documents: See Section 01 78 00 for additional requirements; have one set available during closeout demonstration:
   1. Complete set of floor plans showing actual installed locations of components, conduit, and zones.
   2. "As installed" wiring and schematic diagrams, with final terminal identifications.
   3. "As programmed" operating sequences, including control events by device, updated input/output chart, and voice messages by event.

K. Closeout Documents:
   1. Certification by manufacturer that the system has been installed in compliance with his installation requirements, is complete, and is in satisfactory operating condition.
   2. NFPA 72 "Record of Completion", filled out completely and signed by installer and authorized representative of authority having jurisdiction.
   3. Certificate of Occupancy.
   4. Maintenance contract.

L. Maintenance Materials, Tools, and Software: Furnish the following for Red Clay Consolidated School District's use in maintenance of project.
   1. Furnish spare parts of same manufacturer and model as those installed; deliver in original packaging, labeled in same manner as in operating and maintenance data and place in spare parts cabinet.
   2. In addition to the items in quantities indicated in PART 2, furnish the following:
      a. All tools, software, and documentation necessary to modify the fire alarm system using Red Clay Consolidated School District's personnel; minimum modification capability to include addition and deletion of devices, circuits, and zones, and changes to system description, operation, and evacuation and instructional messages.
      b. One copy, on CD-ROM, of all software not resident in read-only-memory.

1.05 QUALITY ASSURANCE

A. Designer Qualifications: NICET Level III or IV (3 or 4) certified fire alarm technician or registered fire protection engineer, employed by fire alarm control panel manufacturer, Contractor, or installer, with experience designing fire alarm systems in the jurisdictional area of the authorities having jurisdiction.

B. Installer Qualifications: Firm with minimum 3 years documented experience installing fire alarm systems of the specified type and providing contract maintenance service as a regular part of their business.
   1. Authorized representative of control unit manufacturer; submit manufacturer's certification that installer is authorized; include name and title of manufacturer's representative making certification.
   2. Installer Personnel: At least 2 years of experience installing fire alarm systems.
   3. Supervisor: NICET level III or IV (3 or 4) certified fire alarm technician; furnish name and address.

C. Maintenance Contractor Qualifications: Same entity as installer or different entity with specified qualifications.

D. Instructor Qualifications: Experienced in technical instruction, understanding fire alarm theory, and able to provide the required training; trained by fire alarm control unit manufacturer.

1.06 WARRANTY

A. See Section 01 78 00 - Closeout Submittals, for additional warranty requirements.

B. Provide control panel manufacturer's warranty that system components other than wire and conduit are free from defects and will remain so for 1 year after date of Substantial Completion.

C. Provide installer's warranty that the installation is free from defects and will remain so for 1 year after date of Substantial Completion.

PART 2 PRODUCTS

2.01 MANUFACTURERS

A. Fire Alarm Control Units - Basis of Design: _GE EST 3 fire alarm systems - Tie into existing system.

B. Fire Alarm Control Units - Other Acceptable Manufacturers: Provided their products meet or exceed the performance of the basis of design product, products of the following are acceptable:
   1. Provide all control units made by the same manufacturer.

C. Initiating Devices, and Notification Appliances:
   1. Same manufacturer as control units.
   2. Provide all initiating devices and notification appliances made by the same manufacturer.

D. Substitutions: See Section 01 60 00 - Product Requirements.
   1. For other acceptable manufacturers of control units specified, submit product data showing equivalent features and compliance with contract documents.
   2. For substitution of products by manufacturers not listed, submit product data showing features and certification by Contractor that the design will comply with contract documents.

2.02 FIRE ALARM SYSTEM

A. Fire Alarm System: Provide modifications and extensions to the existing GE EST- 3 automatic fire detection and alarm system:
   1. Provide all components necessary, regardless of whether shown in the contract documents or not.
   2. Protected Premises: Entire building shown on drawings.
   3. Comply with the following; where requirements conflict, order of precedence of requirements is as listed:
      a. ADA Standards for Accessible Design.
      b. The requirements of the State Fire Marshal.
      c. The requirements of the local authority having jurisdiction, which is Delaware state Fire Marshall's office..
      d. Applicable local codes.
      e. The contract documents (drawings and specifications).
      f. NFPA 72; where the word "should" is used consider that provision mandatory; where conflicts between requirements require deviation from NFPA 72, identify deviations clearly on design documents.
   4. Evacuation Alarm: Multiple smoke zones; allow for evacuation notification of any individual zone or combination of zones, in addition to general evacuation of entire premises.
   5. Voice Notification: Provide emergency voice/alarm communications with multichannel capability; digital.

6. General Evacuation Zones: Each smoke zone is considered a general evacuation zone unless otherwise indicated, with alarm notification in all zones on the same floor, on the floor above, and the floor below.
7. Program notification zones and voice messages as directed by Red Clay Consolidated School District.
8. Hearing Impaired Occupants: Provide visible notification devices in all public areas and in dwelling units.
9. Fire Command Center: Location indicated on drawings.
10. Master Control Unit (Panel): New, located at fire command center.

B. Supervising Stations and Fire Department Connections:
1. Public Fire Department Notification: By on-premises supervising station.
2. On-Premises Supervising Station: Existing proprietary station operated by Red Clay Consolidated School District, located at _____.
3. Means of Transmission to On-Premises Supervising Station: Directly connected noncoded system.

C. Circuits:
1. Initiating Device Circuits (IDC): Class A, Style D.
2. Signaling Line Circuits (SLC) Within Single Building: Class A, Style 7.
3. Notification Appliance Circuits (NAC): Class A, Style Z.

D. Spare Capacity:
1. Initiating Device Circuits: Minimum 25 percent spare capacity.
2. Notification Appliance Circuits: Minimum 25 percent spare capacity.
3. Speaker Amplifiers: Minimum 25 percent spare capacity.
4. Master Control Unit: Capable of handling all circuits utilized to capacity without requiring additional components other than plug-in control modules.

E. Power Sources:
1. Primary: Dedicated branch circuits of the facility power distribution system.
2. Secondary: Storage batteries.
3. Capacity: Sufficient to operate entire system for period specified by NFPA 72.
4. Each Computer System: Provide uninterruptible power supply (UPS).

2.03 EXISTING COMPONENTS

A. On-Premises Supervising Station: Include as part of this work all modifications necessary to existing supervising station to accommodate new fire alarm work.

B. Clearly label components that are "Not In Service."

C. Remove unused existing components and materials from site and dispose of properly.

2.04 FIRE SAFETY SYSTEMS INTERFACES

A. Supervision: Provide supervisory signals in accordance with NFPA 72 for the following:
1. Sprinkler water control valves.
2. Dry-pipe sprinkler system pressure.
3. Dry-pipe sprinkler valve room low temperature.
4. Fire pump(s).
5. Elevator shut-down control circuits.

B. Alarm: Provide alarm initiation in accordance with NFPA 72 for the following:
1. Sprinkler water flow.
2. Kitchen hood suppression activation; also disconnect fuel source from cooking

equipment.
3. Elevator lobby, elevator hoistway, and elevator machine room smoke detectors.
4. Duct smoke detectors.

C. Elevators:
1. Elevator lobby, hoistway, and machine room smoke detectors: Elevator recall for fire fighters' service.
2. Elevator Machine Room Heat Detector: Shut down elevator power prior to hoistway sprinkler activation.
3. Sprinkler pressure or waterflow: Shut down elevator power prior to hoistway sprinkler activation.

D. HVAC:
1. Duct Smoke Detectors: Close dampers indicated; shut down air handlers indicated.

2.05 COMPONENTS

A. General:
1. Provide flush mounted units where installed in finish areas; in unfinished areas, surface mounted unit are acceptable.
2. Provide legible, permanent labels for each control device, using identification used in operation and maintenance data.

B. Fire Alarm Control Units, Initiating Devices, and Notification Appliances: Analog, addressable type; listed by Underwriters Laboratories as suitable for the purpose intended.

C. Master Control Unit: As specified for Basis of Design above, or equivalent.

D. Remote Annunciators: _____.

E. Initiating Devices:
1. Manual Pull Stations: _____.
2. Key Operated Pull Stations: _____.
3. Smoke Detectors: _____.
4. Duct Smoke Detectors: _____.
5. Heat Detectors: _____.
6. Addressable Interface Devices: _____.

F. Notification Appliances:
1. Bells: _____.
2. Speakers: _____.
3. Strobes: _____.

G. Circuit Conductors: Copper or optical fiber; provide 200 feet extra; color code and label.

H. Surge Protection: In accordance with IEEE C62.41.2 category B combination waveform and NFPA 70; except for optical fiber conductors.

I. Locks and Keys: Deliver keys to Red Clay Consolidated School District.

J. Instruction Charts: Printed instruction chart for operators, showing steps to be taken when a signal is received (normal, alarm, supervisory, and trouble); easily readable from normal operator's station.
1. Frame: Stainless steel or aluminum with polycarbonate or glass cover.
2. Provide one for each control unit where operations are to be performed.
3. Obtain approval of Red Clay Consolidated School District prior to mounting; mount in location acceptable to Red Clay Consolidated School District.
4. Provide extra copy with operation and maintenance data submittal.

PART 3 EXECUTION

3.01 INSTALLATION

A. Install in accordance with applicable codes, NFPA 72, NFPA 70, and the contract documents.

B. Conceal all wiring, conduit, boxes, and supports where installed in finished areas.

C. Obtain Red Clay Consolidated School District's approval of locations of devices, before installation.

D. Install instruction cards and labels.

3.02 INSPECTION AND TESTING FOR COMPLETION

A. Notify Red Clay Consolidated School District 7 days prior to beginning completion inspections and tests.

B. Notify authorities having jurisdiction and comply with their requirements for scheduling inspections and tests and for observation by their personnel.

C. Provide the services of the installer's supervisor or person with equivalent qualifications to supervise inspection and testing, correction, and adjustments.

D. Prepare for testing by ensuring that all work is complete and correct; perform preliminary tests as required.

E. Provide all tools, software, and supplies required to accomplish inspection and testing.

F. Perform inspection and testing in accordance with NFPA 72 and requirements of local authorities; document each inspection and test.

G. Correct defective work, adjust for proper operation, and retest until entire system complies with contract documents.

3.03 Red Clay Consolidated School District PERSONNEL INSTRUCTION

A. Provide the following instruction to designated Red Clay Consolidated School District personnel:
   1. Hands-On Instruction: On-site, using operational system.
   2. Classroom Instruction: Red Clay Consolidated School District furnished classroom, on-site or at other local facility.

B. Administrative: One-hour session(s) covering issues necessary for non-technical administrative staff; classroom:
   1. Initial Training: 1 session pre-closeout.

C. Basic Operation: One-hour sessions for attendant personnel, security officers, and engineering staff; combination of classroom and hands-on:
   1. Initial Training: 1 session pre-closeout.

D. Furnish the services of instructors and teaching aids; have copies of operation and maintenance data available during instruction.

3.04 CLOSEOUT

A. Closeout Demonstration: Demonstrate proper operation of all functions to Red Clay Consolidated School District.
   1. Be prepared to conduct any of the required tests.

2. Have at least one copy of operation and maintenance data, preliminary copy of project record drawings, input/output matrix, and operator instruction chart(s) available during demonstration.
3. Have authorized technical representative of control unit manufacturer present during demonstration.
4. Demonstration may be combined with inspection and testing required by authority having jurisdiction; notify authority having jurisdiction in time to schedule demonstration.
5. Repeat demonstration until successful.

B. Occupancy of the project will not occur prior to Substantial Completion.

C. Substantial Completion of the project cannot be achieved until inspection and testing is successful and:
1. Approved operating and maintenance data has been delivered.
2. Spare parts, extra materials, and tools have been delivered.
3. All aspects of operation have been demonstrated to Red Clay Consolidated School District.
4. Final acceptance of the fire alarm system has been given by authorities having jurisdiction.
5. Occupancy permit has been granted.
6. Specified pre-closeout instruction is complete.

3.05 MAINTENANCE

A. See Section 01 70 00 - Execution Requirements, for additional requirements relating to maintenance service.

B. Provide to Red Clay Consolidated School District, at no extra cost, a written maintenance contract for entire manufacturer's warranty period, to include the work described below.

C. Perform routine inspection, testing, and preventive maintenance required by NFPA 72, including:
1. Maintenance of fire safety interface and supervisory devices connected to fire alarm system.
2. Repairs required, unless due to improper use, accidents, or negligence beyond the control of the maintenance contractor.
3. Record keeping required by NFPA 72 and authorities having jurisdiction.

D. Provide trouble call-back service upon notification by Red Clay Consolidated School District:
1. Provide on-site response within 2 hours of notification.
2. Include allowance for call-back service during normal working hours at no extra cost to Red Clay Consolidated School District.
3. Red Clay Consolidated School District will pay for call-back service outside of normal working hours on an hourly basis, based on actual time spent at site and not including travel time; include hourly rate and definition of normal working hours in maintenance contract.

E. Provide a complete description of preventive maintenance, systematic examination, adjustment, cleaning, inspection, and testing, with a detailed schedule.

F. Maintain a log at each fire alarm control unit, listing the date and time of each inspection and call-back visit, the condition of the system, nature of the trouble, correction performed, and parts replaced. Submit duplicate of each log entry to Red Clay Consolidated School District's representative upon completion of site visit.

G. Comply with Red Clay Consolidated School District's requirements for access to facility and

security.

END OF SECTION

SECTION 311000 - SITE CLEARING

PART 1 - GENERAL

1.1 RELATED DOCUMENTS

A. Drawings and general provisions of the Contract, including General and Supplementary Conditions and Division 01 Specification Sections, apply to this Section.

1.2 SUMMARY

A. This Section includes the following:

1. Protecting existing trees, shrubs, plants and grass to remain.
2. Removing existing trees and other vegetation.
3. Clearing and grubbing.
4. Stripping and stockpiling topsoil.
5. Removing above- and below-grade site improvements.
6. Disconnecting, capping or sealing, and abandoning site utilities in place and removing site utilities.
7. Temporary erosion and sedimentation control measures.

B. Related Sections include the following:

1. Division 01 Section "Temporary Construction Utilities, Facilities & Controls" for temporary utilities, temporary construction and support facilities, temporary security and protection facilities.
2. Division 31 Section "Earth Moving" for soil materials, excavating, backfilling, and site grading.
3. Division 32 Section "Turf and Grasses" for finish grading including preparing and placing planting soil mixes and testing of topsoil material.

1.3 DEFINITIONS

A. Topsoil: Natural or cultivated surface-soil layer containing organic matter and sand, silt, and clay particles; friable, pervious, and black or a darker shade of brown, gray, or red than underlying subsoil; reasonably free of subsoil, clay lumps, gravel, and other objects more than 2 inches in diameter; and free of subsoil and weeds, roots, toxic materials, or other nonsoil materials.

B. Tree Protection Zone: Area surrounding individual trees or groups of trees to be protected during construction, and defined by the drip line of individual trees or the perimeter drip line of groups of trees, unless otherwise indicated.

1.4 MATERIAL OWNERSHIP

A. Except for stripped topsoil or other materials indicated to remain Owner's property, cleared materials shall become Contractor's property and shall be removed from Project site.

1.5 SUBMITTALS

A. Photographs or videotape, sufficiently detailed, of existing conditions of trees and plantings, adjoining construction, and site improvements that might be misconstrued as damage caused by site clearing.

1.6 QUALITY ASSURANCE

A. Preinstallation Conference: Conduct conference at Project site to comply with requirements in Division 01 Section "Project Management and Coordination."

1.7 PROJECT CONDITIONS

A. Traffic: Minimize interference with adjoining roads, streets, walks, and other adjacent occupied or used facilities during site-clearing operations.

1. Do not close or obstruct streets, walks, or other adjacent occupied or used facilities without permission from Owner and authorities having jurisdiction.
2. Provide alternate routes around closed or obstructed traffic ways if required by authorities having jurisdiction.

B. Utility Locator Service: Notify utility locator service for area where Project is located before site clearing. The contractor is responsible for all costs associated with a utility locator service.

C. Do not commence site clearing operations until temporary erosion and sedimentation control measures are in place.

PART 2 - PRODUCTS

2.1 SOIL MATERIALS

A. Satisfactory Soil Materials: Requirements for satisfactory soil materials are specified in Division 31 Section "Earth Moving."

1. Obtain approved borrow soil materials off-site when satisfactory soil materials are not available on-site.

PART 3 - EXECUTION

3.1 PREPARATION

A. Protect and maintain benchmarks and survey control points from disturbance during construction.

B. Locate and clearly flag trees and vegetation to remain or to be relocated.

C. Protect existing site improvements to remain from damage during construction.

1. Restore damaged improvements to their original condition, as acceptable to Owner.

D. Contact DNREC, Division of Sediment and Stormwater to arrange a preconstruction meeting prior to any site clearing or site disturbance activities.

3.2 TEMPORARY EROSION AND SEDIMENTATION CONTROL

A. Provide temporary erosion and sedimentation control measures to prevent soil erosion and discharge of soil-bearing water runoff or airborne dust to adjacent properties and walkways, according to approved Sediment and Erosion Control Drawings.

B. Inspect, repair, and maintain erosion and sedimentation control measures during construction until permanent vegetation has been established.

C. Remove erosion and sedimentation controls and restore and stabilize areas disturbed during removal.

3.3 TREE PROTECTION

A. Erect and maintain temporary fencing around tree protection zones before starting site clearing. Remove fence when construction is complete.

1. Do not store construction materials, debris, or excavated material within fenced area.
2. Do not permit vehicles, equipment, or foot traffic within fenced area.
3. Maintain fenced area free of weeds and trash.

B. Do not excavate within tree protection zones, unless otherwise indicated.

C. Repair or replace trees and vegetation indicated to remain that are damaged by construction operations, in a manner approved by Architect.

1. Employ an arborist, licensed in jurisdiction where Project is located, to submit details of proposed repairs and to repair damage to trees and shrubs.
2. Replace trees that cannot be repaired and restored to full-growth status, as determined by Architect.

3.4 UTILITIES

A. Locate, identify, disconnect, and seal or cap off utilities indicated to be removed.

1. Construction Manager will arrange to shut off indicated on-site utilities when requested by Contractor.

B. Existing Utilities: Do not interrupt utilities serving facilities occupied by Owner or others unless permitted under the following conditions and then only after arranging to provide temporary utility services according to requirements indicated:

1. Notify Construction Manger and Owner not less than five days in advance of proposed utility interruptions.
2. Do not proceed with utility interruptions without Construction Manager’s written permission.

C. Excavate for and remove underground utilities indicated to be removed. Refer to sections covering site utilities.

3.5 CLEARING AND GRUBBING

A. Remove obstructions, trees, shrubs, grass, and other vegetation to permit installation of new construction.

1. Do not remove trees, shrubs, and other vegetation indicated to remain or to be relocated.
2. Cut minor roots and branches of trees indicated to remain in a clean and careful manner where such roots and branches obstruct installation of new construction.
3. Grind stumps and remove roots, obstructions, and debris extending to a depth of 18 inches below exposed subgrade.
4. Use only hand methods for grubbing within tree protection zone.
5. Chip removed tree branches and dispose of off-site.

B. Fill depressions caused by clearing and grubbing operations with satisfactory soil material unless further excavation or earthwork is indicated.

1. Place fill material in horizontal layers not exceeding a loose depth of 8 inches, and compact each layer to a density equal to adjacent original ground.

3.6 TOPSOIL STRIPPING

A. Remove sod and grass before stripping topsoil.

B. Strip topsoil to whatever depths are encountered in a manner to prevent intermingling with underlying subsoil or other waste materials.

1. Remove subsoil and nonsoil materials from topsoil, including trash, debris, weeds, roots, and other waste materials.

C. Stockpile topsoil materials away from edge of excavations without intermixing with subsoil. Grade and shape stockpiles to drain surface water. Cover to prevent windblown dust.

1. Do not stockpile topsoil within tree protection zones.
2. Stockpile surplus topsoil to allow for respreading deeper topsoil.

3.7 SITE IMPROVEMENTS

A. Remove existing above- and below-grade improvements as indicated and as necessary to facilitate new construction.

B. Remove slabs, paving, curbs, gutters, and aggregate base as indicated.

1. Unless existing full-depth joints coincide with line of demolition, neatly saw-cut length of existing pavement to remain before removing existing pavement. Saw-cut faces vertically.
2. Paint cut ends of steel reinforcement in concrete to remain to prevent corrosion.

3.8 DISPOSAL

A. Disposal: Remove surplus soil material, unsuitable topsoil, obstructions, demolished materials, and waste materials including trash and debris, and legally dispose of them off Owner's property.

END OF SECTION 311000

SECTION 312000 – EARTH MOVING

PART 1 - GENERAL

1.1 RELATED DOCUMENTS

A. The General Conditions, any Supplementary General Conditions and Division 1, General Requirements, are hereby made a part of this Section as fully as if repeated herein.

1.2 SECTION INCLUDES

A. Earthwork includes areas below building foundations, below concrete slabs on grade, below paved areas and grading of all unpaved areas on the site.

1. Layout and staking for earthwork.
2. Excavation and rough grading.
3. Erosion and sediment control.
4. Foundation excavation for footings.
5. Establishing subgrades, leveling and proof rolling.
6. Filling, backfilling and compaction.
7. Keeping streets clean of materials tracked off site.
8. Includes trenching, excavation and backfill for utilities.
9. Maintenance and/or repair of damage to the rough grading.
10. Removal and disposal of stones, rock, debris, excess and unsuitable materials.
11. Soil treatment for termite control.
12. Field quality control, testing, and inspection.

1.3 DEFINITIONS

A. Rock Excavation: Natural geological formations or other material which cannot be removed by adequate equipment (in good condition) as defined below, shall be considered a change in the scope of work and paid for by the Owner if encountered.

1. Open Excavation and Grading: Rock in excess of the capabilities of a Caterpillar D-8 tractor (or equivalent) with 2 cu. yd. bucket and hydraulically operated single tooth power ripper.
2. Trenches, Pits and Footings: Rock in excess of the capabilities of a Caterpillar 235 Hydraulic Backhoe (or equivalent) using a 2 ft. Bucket width (3/4 cu. yd.)
3. Minimum Effort: If rock is not removed during the process of normal digging and ripping, then extend the excavation to expose the rock surface within the limit of original excavation. Contact the A/E and he may direct the sides of rock to be exposed to a depth of 3 feet. This will be to determine the extent of additional work.

B. Earth Excavation: Anything not classified as rock including as example: soils, gravels, stones, boulders, vegetation, debris, and unsuitable materials.

C. Unsuitable Materials: All excavated materials; debris, man made or fabricated materials, concrete spoil, organic, soft, expansive, or unstable matter; all shall be disposed of as herein specified. Excessive moisture content shall not classify a material as unsuitable.

D. Removal and disposal of unsuitable material above the subgrade elevation and placement of approved specific fill material (from on or off the site) above the subgrade elevation as directed by the Soils Engineer shall be considered a part of the work.

E. Removal and disposal of unsuitable material approved below the subgrade elevation and placement of approved specific fill material (from on or off the site) below the subgrade elevation as directed by the Soils Engineer shall be considered a change in the scope of work.

F. Soils Engineer or Inspection Agency: An Agency and its designated representatives who monitor and approve all earthwork operations described herein.

G. Subgrade: The finished elevation of the earth immediately below all slabs, granular and porous fill, paving, footings, walls, etc., except the subgrade elevation shall not be higher than 12" below the existing earth elevation at the start of the project.

H. Subgrade for utility construction: Underside of barrel of pipe, or underside of any cradle or bedding if noted on drawings, or referenced in applicable local government specifications. For pipe drains and miscellaneous structures encased in concrete or on concrete, stone and/or gravel cradle, subgrade is lowest outside surface of encasement or cradle.

I. Structures: Buildings, footings, foundations, retaining walls, slabs, tanks, curbs, mechanical and electrical appurtenances, or other man-made stationary features constructed above or below the ground surface.

J. Bedding Course: Course placed over the excavated subgrade in a trench before laying pipe.

K. Drainage Course: Course supporting the slab on grade that also minimizes upward capillary flow of pore water.

L. Subbase Course: Course placed between the subgrade and base course for hot-mix asphalt pavement, or course placed between the subgrade and a cement concrete pavement or a cement concrete or hot-mix asphalt walk.

M. Utilities: On site underground pipes, conduits, ducts, and cables, as well as underground services within buildings.

N. Filter Material: Course placed around drainage pipes.

1.4 QUALITY ASSURANCE

A. Reference Standards:

1. American Association of State Highway and Transportation Officials (AASHTO).
2. American Society for Testing and Materials (ASTM).
3. Delaware Department of Transportation, State Highway Administration “Standard Specifications for Materials and Construction”, as amended to date (DelDOT as hereinafter referred). Delete references to Measurement and Payment.

B. Geotechnical Testing Agency Qualifications: An independent testing agency (with a Geotechnical engineer licensed in the state where the project is being constructed on staff) qualified according to ASTM E 329 to conduct soil materials and rock-definition testing, as documented according to ASTM D 3740 and ASTM E 548.

C. Tolerances: As indicated herein.

D. Testing: Requirements as specified herein.

1.5 SUBMITTALS

A. Notification:

1. Notify and provide data to regulatory authorities and A/E prior to commencement of work.
2. Provide notice of: encounter with unknown utilities; subgrades before filling; areas requiring
3. testing or inspection.

B. Product Data: For the following:

1. Geotextile.
2. Detection Warning Tape.

C. Material Test Reports: From a qualified testing agency indicating and interpreting test results for compliance of the following with requirements indicated:

1. Classification according to ASTM D2487 of each on site and borrow soil material proposed for fill and backfill.
2. Laboratory compaction curve according to ASTM D1557 for each on site and borrow soil material proposed for fill and backfill.
3. Field reports; in-place soil density tests.
4. One optimum moisture – maximum density curve for each type of soil encountered.
5. Report of actual unconfined compressive strength and/or results of bearing tests of each strata tested.
6. Test reports must be submitted daily to the Architect and Owner.

1.6 PROJECT CONDITIONS

A. Subsurface Conditions: Subsurface soils investigations have been made at the site. The report and logs of the test borings and test pits are included in the Appendix of these specifications. Such investigations have been made for the purposes of design only and neither the Engineers, the Owner, nor the Geotechnical Engineer guarantee adequacy or accuracy of the data, or that data are representative of all conditions to be encountered. Such information is made available for general information only and shall not relieve the Contractor of the responsibility for making his own investigations, tests, and analyses. Any additional test borings and other exploratory operations may be made by Contractor shall be at no cost to Owner.

1. See Geotechnical Engineering Report prepared by Hillis Carnes Engineering Associates, Inc., in Division 1 for test boring data and other requirements.

B. Erosion and sediment control, in addition to erosion control specified in Section 31100 and Division 1:

1. Standards: Comply with the requirements of the "Standards and Specifications for Soil Erosion and Sediment Control in Developing Areas" by the U.S.D.A. Soil Conservation Service.
2. General Erosion: Prevent erosion of earthwork; repair and correct any ditches, gullies or erosion immediately and upon occurrence.
3. Excavations: Prevent water from flowing into open excavations and toward building walls.
4. Slopes: Cover (with continuous plastic membrane) and stake all slopes steeper than 1.5 horizontal to 1 vertical.

C. Environmental Conditions:

1. Do not apply soil treatment when temperature is at or below freezing or when ground is frozen or frost is expected.
2. Do not apply soil treatment when surface water is present.

D. Existing Conditions: Accept the site in the condition which it exists at the time of the award of the contract and perform all work to the grades indicated.

1. Protect plant material, lawns and other features not designated for removal.
2. Protect bench marks, existing structures, fences, sidewalks, paving and curbs from excavating equipment and vehicular traffic.

E. Existing Utilities: Locate existing underground utilities in areas of work. If utilities are to remain in place, provide adequate means of protection during earthwork operations.

1. Should uncharted, or incorrectly charted, piping or other utilities be encountered during excavation, consult utility Owner immediately for directions. Cooperate with Owner and utility companies in keeping respective services and facilities in operation. Repair damaged utilities to satisfaction of utility Owner.
2. Do not interrupt existing utilities serving facilities occupied and used by others, except when permitted in writing by A/E and then only after acceptable temporary utility services have been provided. Provide a minimum of 48 hour notices to utility Owners and receive written notice to proceed before interrupting any utility.

F. Rock Excavation: Rock excavation may be performed with hoe rams, jack hammers, or any method the Contractor wishes to employ except for explosives.

1.7 PROTECTION

A. Safety: Provide protective measures necessary for the safety of workmen, to the public and adjacent property. Prevent cave-ins, collapse of walls, structures and slopes, both on and adjacent to the site.

B. Standards: Comply with regulations of local authorities having jurisdiction, including all applicable O.S.H.A. requirements.

C. Repair: Includes the removal and replacement with new materials all materials so affected by settlement.

PART 2 - PRODUCTS

2.1 FILL AND BACKFILL

A. Satisfactory Soils:

1. Compacted granular fill and backfill (less than 35% passing the #200 sieve) shall be free of deleterious matter such as frozen materials, organics, wood, debris, or rock larger than 4 inches in diameter and be classified SP, SW, SP-SM, or SC, per ASTM D-2487. All material shall have a liquid limit and plasticity index not exceeding 40 and 20 respectively when tested in accordance with ASTM D-4318.
2. The minimum dry unit weight shall not be less than 105 PCF maximum dry density as determined by ASTM D-698, standard proctor.
3. All fill and backfill materials shall be obtained from on site or from off site sources and shall be approved by the Geotechnical Engineer prior to placement.
4. Provide borrow soil materials when sufficient satisfactory soil materials are not available from excavations.

B. Engineered Fill: Naturally or artificially graded mixture of natural or crushed gravel, crushed stone, and natural or crushed sand; ASTM D 2940; with a least 90 percent passing a 1 ½ inch sieve and not more than 12 percent passing a No. 200 sieve.

1. Locations: All on site fill areas

C. Structural Fill: On-site soils free of organic material, topsoil, miscellaneous fill, debris and rock fragments in excess of 3 inches in their largest dimension may be suitable as structural fill.The granular on-site soils may be suitable for re-use as structural fill. Some of these soils have an in-situ moisture content that exceeds the typical range that would allow the recommended compaction to be achieved. Therefore, moisture conditioning of these soils may be required to achieve the recommended

compaction. All on-site soils to be used as structural fill must be approved by the Geo-Technical Engineer.

If sufficient quantities of suitable on-site soils are not available for structural fill, imported borrow consisting of predominately granular soils conforming to the requirements of the Delaware Department of Transportation Standard Specifications Select Borrow, Type G should be utilized or AASHTO SP-57 stone. All off-site borrow materials must be approved by the Geo-Technical Engineer.

D. Drainage fill:

1. Washed, narrowly graded mixture of crushed stone, or crushed or uncrushed gravel, (ASTM D 448 Coarse - aggregate grading size 57), with 100% passing of 1-1/2" sieve and not more than 5% passing a No. 8 sieve. Aggregate shall meet DELDOT specification for No. 106A aggregate. Provide by Contractor from off site source.

   a. Locations: All concrete slab on grade areas

2. For foundation drainage, use aggregate meeting DELDOT specification for No. 113 aggregate.

   a. Locations: Drainage fill behind basement walls and retaining walls.

E. Stone Base Course: Naturally or artificially graded mixture of natural or crushed gravel, crushed stone, reclaimed concrete, and natural or crushed sand (ASTM D2490) with at least 95% passing a 1 ½" sieve and not more than 8% passing a No. 200 sieve. Provide by contractor from off site sources.

F. Subbase Material: Designation CR-6 in accordance with DELDOT Specifications.

1. Locations: All vehicular traffic areas

G. Bedding Course: Naturally or artificially graded mixture of natural or crushed gravel, crushed stone, and natural or crushed sand; ASTM D2940; except with 100 percent passing a 1 inch (25-mm) sieve and not more than 8 percent passing a No. 200 (0.075-mm) sieve. For utility installations, bedding shall conform to AASHTO #57 stone.

H. Filter Material: Narrowly graded mixture of natural or crushed gravel, or crushed stone and natural sand; AASHTO M-43, size No. 17.

I. Sand: ASTM C 33; fine aggregate, natural, or manufactured sand.

J. Processed Rubble Fill: Existing brick and concrete rubble, free of wood and steel may be processed by use of tracked equipment such that no particle size greater than 6 inches in the longest dimension remains.

K. Impervious Fill: Clayey gravel and sand mixture capable of compacting to a dense state.

2.2 FILL AND BACKFILL FOR UTILITIES

A. Backfill: Earth removed from the trench provided that in the opinion of Soils Engineer such excavated material is satisfactory for backfilling.

B. Should the excavated material be considered unsatisfactory for backfilling, the Contractor shall remove and dispose of such unsatisfactory material and substitute, in lieu thereof, suitable material obtained from elsewhere on or off the site.

C. Materials shall meet the requirements specified in paragraph 2.1.A above.

2.3 TOPSOIL

A. Refer to Section 329200 Turf and Grasses.

2.4 SOIL TREATMENT - TERMITE CONTROL

A. Emulsion soil chemicals of only water-based type. Do not use any fuel oil as a dilutent.

B. Solutions and chemicals listed and approved by EPA, USDA, and Delaware State Department of Agriculture.

C. Chemicals used in retreatment shall also be certified and state type of chemical and rate of concentration.

2.5 ACCESSORIES

A. Detectable Warning Tape: Acid and alkali-resistant polyethylene film warning tape manufactured for marking and identifying underground utilities, a minimum of 6 inches (150 mm) wide and 4 mils (0.1 mm) thick, continuously inscribed with a description of the utility, with metallic core encased in a protective jacket for corrosion protection, detectable by metal detector when tape is buried up to 30 inches (750 mm) deep; colored as follows:

1. Red: Electric
2. Yellow: Gas, oil, steam, and dangerous materials.
3. Orange: Telephone and other communications.
4. Blue: Water systems
5. Green: Sewer systems.

2.6 GEOTEXTILES

A. Subsurface Drainage Geotextile: Nonwoven needle-punched geotextile, manufactured for subsurface drainage applications, made from polyolefins or polyesters; with elongation greater than 50 percent; complying with AASHTO M 288 and the following, measured per test methods referenced:

1. Survivability: Class 2; AASHTO M 288.
2. Grab Tensile Strength: 157 lbf; ASTM D 4632.
3. Sewn Seam Strength: 142 lbf; ASTM D 4632.
4. Tear Strength: 56 lbf; ASTM D 4533.
5. Puncture Strength: 56 lbf; ASTM D 4833.
6. Apparent Opening Size: No. 70 sieve, maximum; ASTM D 4751.
7. Permittivity: 0.5 per second, minimum; ASTM D 4491.
8. UV Stability: 50 percent after 500 hours' exposure; ASTM D 4355.

B. Separation Geotextile: Woven geotextile fabric, manufactured for separation applications, made from polyolefins or polyesters; with elongation less than 50 percent; complying with AASHTO M 288 and the following, measured per test methods referenced:

1. Survivability: Class 2; AASHTO M 288.
2. Grab Tensile Strength: 247 lbf; ASTM D 4632.
3. Sewn Seam Strength: 222 lbf; ASTM D 4632.
4. Tear Strength: 90 lbf; ASTM D 4533.
5. Puncture Strength: 90 lbf; ASTM D 4833.
6. Apparent Opening Size: No. 40 sieve, maximum; ASTM D 4751.

7. Permittivity: 0.02 per second, minimum; ASTM D 4491.
8. UV Stability: 50 percent after 500 hours' exposure; ASTM D 4355.

2.7 FLOWABLE FILL

A. Stabilized flowable fly ash mixture with a maximum slump of 8" and a minimum unconfined compressive strength of 100 psi used to fill construction excavations.

B. Manufacturer: American Stone Mix or approved equal.

PART 3 - EXECUTION

3.1 PREPARATION

A. Verify existing ground surfaces have been stripped of topsoil, root mat and existing pavement, unsatisfactory soils, concrete spoil, obstructions and deleterious material.

B. Following rough grading and prior to foundation excavation, placement of fill, or construction of the floor slabs, the exposed subgrade shall be proofrolled. The proofroll should be performed using a minimum 20-ton, fully loaded dump truck (or equal) in the presence of the qualified soils technician working under the supervision of a geotechnical engineer. Yielding or otherwise unsuitable subgrade conditions encountered within the proposed building areas should be undercut to firm subgrade conditions and backfilled with compacted structural fill.

C. Locate underground utilities in areas of work. If utilities are to remain in place, provide adequate means of protection during earthwork operations. Contact "Miss Utility".

D. Use of explosives will not be permitted, unless approved by Owner in writing and Regulatory Agencies having jurisdiction.

E. Demolish and completely remove from site existing underground utilities indicated to be removed. Coordinate with utility companies to shut off services if lines are active.

F. Protect structures, utilities, sidewalks, pavements, and other facilities from damage caused by settlement, lateral movement, undermining, washout, and other hazards created by earthwork operations.

G. Protect subgrades and foundation soils against freezing temperatures or frost. Provide protective insulating materials as necessary.

H. Provide erosion-control measures to prevent erosion or displacement of soils and discharge of soil-bearing water runoff or airborne dust to adjacent properties and walkways.

3.2 EXCAVATION

A. Excavation consists of removal and disposal of material encountered when establishing required finish grade elevations.

B. Unauthorized Excavations:

1. Unauthorized excavation consists of removal of materials beyond indicated subgrade elevations or dimensions without specific direction of A/E. Unauthorized excavation, as well as remedial work directed by A/E, shall be at Contractor's expense.
2. Under footings, foundations, or retaining walls, fill unauthorized excavation by extending indicated bottom elevation of footing to excavation bottom, without altering required top

elevation. Lean concrete, flo-ash fill, or compacted structural fill may be used to bring elevations to proper position, when acceptable by A/E.

C. Additional Excavation: When excavation has reached required subgrade elevations, notify Soils Engineer who will make an inspection of conditions.

1. If unsuitable bearing materials are encountered at required subgrade elevations, carry excavations deeper and replace excavated materials as directed by A/E
2. Removal of unsuitable material below the subgrade elevation and its replacement as directed will be paid by the Owner on basis of contract conditions relative to change in work.

D. Stability of Excavations: Slope sides of excavations to comply with local codes and ordinances having jurisdiction. Shore and brace where sloping is not possible because of space restrictions or stability of materials excavated.

1. Maintain sides and slopes of excavations in safe conditions until completion of backfilling.

E. Shoring and Bracing: Provide materials for shoring and bracing, such as sheet piling, uprights, stringers, and cross braces, in good serviceable condition.

1. Establish requirements for trench shoring and bracing to comply with local, State & Federal codes and authorities having jurisdiction.
2. Maintain shoring and bracing in excavations regardless of time period excavations will be open. Carry down shoring and bracing as excavation progresses.

F. Dewatering: Prevent surface water and subsurface or ground water from flowing into excavations and from flooding project site and surrounding area.

1. Do not allow water to accumulate in excavations. Remove water to prevent softening of foundation bottoms, undercutting footings, and soil changes detrimental to stability of subgrades and foundations. Excavations shall be kept free of water for a minimum of two (2) inches below subgrade of excavation. Provide and maintain pumps, well points, sumps, suction and discharge lines, and other dewatering system components necessary to convey water away from excavations.
2. Convey water removed from excavations and rain water into approved sediment control devices. Establish and maintain temporary drainage ditches and other diversions outside excavation limits for each structure. Do not use trench excavations as temporary drainage ditches.
3. Excessive groundwater conditions: Refer to Article 4.3.6 of the General Conditions.

G. Material Storage: Stockpile satisfactory excavated materials where directed, until required for backfill or fill. Place, grade and shape stockpiles for proper drainage.

1. Prevent saturation of soil above the optimum moisture content.
2. Locate and retain soil materials away from edge of excavations.
3. Dispose of excess soil material and waste materials as herein specified.

H. Excavation for Structures: Conform to elevations and dimensions shown within a tolerance of plus or minus 0.10', and extending sufficient distance from footings and foundations to permit placing and removal of concrete formwork, installation of services, other construction, and for inspection.

1. In excavating for footings and foundations, take care not to disturb bottom of excavation. Excavate by hand to final grade just before concrete reinforcement is placed. Trim bottoms to required lines and grades to leave solid base to receive other work.
2. If in excavating for building foundations the soil directly below the building foundations is disturbed, the disturbed soil shall be removed and shall be re-compacted to 95% of the standard proctor maximum dry density or replaced with concrete backfill.

I. Excavation for Stone and Concrete Pavements: Cut surface under pavements to comply with cross sections, elevations and grades as shown:

1. Where rock or concrete spoil is encountered, carry excavation 18" below subgrade and backfill with suitable material approved by the A/E.

J. Excavation for Trenches: Dig trenches to the uniform width required for particular item to be installed with ample working room.

1. Excavate trenches to depth, lines, gradients, and elevations indicated or required. Carry depth of trenches for piping to establish indicated flow lines and invert elevations. Beyond building perimeter, keep bottoms of trenches sufficiently below finish grade to avoid freeze ups.
2. Where rock is encountered, carry excavation 6" below required elevation and backfill with a 6" layer of crushed stone or gravel prior to installation of pipe.
3. Grade bottoms of trenches as indicated, notching under pipe bells to provide solid bearing for entire body of pipe.

   a. For pipes and conduit less than 6 inches in nominal diameter and flat-bottomed, multiple-duct conduit units, hand-excavate trench bottoms and support pipe and conduit on an undisturbed subgrade.
   b. For pipes and conduit 6 inches or larger in nominal diameter, shape bottom of trench to support bottom 90 degrees of pipe circumference. Fill depressions with tamped sand backfill.

4. Backfill trenches with concrete where trench excavations pass within 18" of column or wall footings and which are carried below bottom of such footings, or which pass under wall footings. Place concrete to level of bottom of adjacent footing. Concrete is specified in Division 3.
5. Do not backfill trenches until tests and inspections have been made and backfilling authorized by A/E. Use care in backfilling to avoid damage or displacement of pipe systems.

K. Cold Weather Protection: Protect excavation bottoms against freezing when atmospheric temperature is less than 35 degrees F. (1 degree C.).

L. Ground Surface Preparation (Structural and Pavement areas):

1. The existing ground surface in the structural and pavement areas shall be stripped of topsoil, root mat, existing pavements, unsatisfactory soils, concrete spoil, obstructions and deleterious material. Base course material from the existing pavements may remain if approved by the A/E. The entire area shall be proof rolled, a minimum of four (4) passes, with a loaded dump truck with a minimum axle load of 20 tons in the presence of the soils engineer. Soft spots identified by the Soils Engineer during proof rolling will be undercut and backfilled in accordance with Section 3.4. Proof rolling and compaction equipment shall meet the requirements of Section 3.3.D.
2. In cut areas, prior to the construction of paving or concrete slab on grade, the entire subgrade shall be proof rolled in the presence of the Soils Engineer. Soft areas encountered during proof rolling shall be undercut and backfilled in accordance with section 3.4. Proof rolling and compaction equipment shall be in compliance with Section 3.3 D.

M. Earthwork Quantities:

1. Contractor shall be responsible for determining earthwork quantities for the completion of the work.

3.3 COMPACTION

A. General: Control soil compaction during construction providing percentage of dry density specified for each area classification.

B. Percentage of Maximum Density Requirements: Compact soil to not less than the following percentages of the maximum dry density which is determined in accordance with ASTM D-698, standard proctor.

1. Structural, pavement and walkway areas, steps and utility trenches - 95% of the maximum dry density.
2. Lawn areas outside the designated structural fill limits – minimum compaction 90% of the maximum dry density.

C. Moisture Control: Obtaining a uniformly high degree of compaction requires control over the moisture content of the material being placed in the fills and backfill. The soils used in fill and backfill shall be brought to within 2% of optimum moisture at no additional cost to the Owner.

1. Where the soil layer is too dry, the Contractor shall apply water uniformly using approved equipment to increase the moisture content to within 2% of the optimum, taking precautions to prevent free water from appearing on the surface during or subsequent to compaction operations.
2. Where the soil layer is too wet, the Contractor shall dry the soils by plowing or discing to aerate the soil and reduce the moisture content to within 2% of the optimum.

D. Compaction equipment shall be as required to complete the scope of work outlined in the geotechnical report, contract documents and specifications for this project.

3.4 BACKFILL AND FILL

A. General: Place acceptable soil material in layers not more than eight (8) inches in thickness to required subgrade elevations, for each area classification listed below. Each layer shall be compacted to the requirements of Section 3.3B.

1. Fill and backfill within building and pavement limits and in utility trenches shall be structural fill soils meeting the requirements of Section 2.1.A.
2. Under lawn areas outside the designated structural fill limits, backfill and fill soils shall be soils meeting the requirements of Section 2.1.A, or other on site materials approved by the Geotechnical Engineer.
3. Fill and backfill located below walkways and steps shall be constructed of structural fill soils meeting the requirements of Section 2.1.A.
4. Drainage fill material shall be proof rolled to a uniform stable condition prior to placement of vapor retarder.
5. Stone base course shall be compacted to 95% maximum dry density per ASTM D-1557.

B. Backfill excavations as promptly as work permits, but not until completion of the following:

1. Acceptance of construction below finish grade including, where applicable, subdrainage damp proofing, waterproofing, and perimeter insulation.
2. Concrete and masonry have cured 28 days and is adequately braced.
3. Inspection, testing, approval, and recording locations of underground utilities.
4. Removal of concrete formwork.
5. Removal of trash and debris.
6. Removing temporary shoring and bracing, and sheeting.
7. Installing permanent or temporary horizontal bracing on horizontally supported walls.

C. Ground surface preparation: Shall be in accordance with Section 3.2K.

1. When existing ground surface has density less than that specified under Section 3.3B for particular area classification, follow the recommendations of the on-site Geo-Technical Engineer. In general

break up ground surface, pulverize, moisture condition to optimum moisture content, and compact to required depth and percentage of maximum dry density.

D. Placement and Compaction: Place backfill and fill materials in layers not more than 8" in loose depth, for material compacted by heavy compaction equipment and not more than 4" in loose depth for material compacted by hand operated tampers.

1. Before compaction, moisten or aerate each layer as may be necessary to provide optimum moisture content. Compact each layer to required percentage of maximum dry density for each classification. Do not place backfill or fill material on surfaces that are muddy, frozen, or contain frost or ice.
2. Place backfill and fill materials evenly adjacent to structures, to required elevations. Take care to prevent wedging action of backfill against structures by carrying material uniformly around structure to approximately same elevation in each lift.
3. Structural fill shall extend a minimum of five (5) feet beyond building and road pavement limits and shall include the support slopes to their full width.
4. Backfilling against pipe structures, whose joints involve the use of cement mortar or other concrete, or where buttresses are constructed, shall not be done until mortar has set at least 12 hours.
5. Compaction over one foot above the pipe shall be done with approved mechanical tampers. Compaction density shall be as specified in Section 3.3.

E. Utility trench backfill

1. Place and compact initial backfill of subbase material, free of particles larger than 1 inch, to a height of 12 inches over the utility pipe or conduit. Carefully compact material under pipe haunches and bring backfill evenly up on both sides and along the full length of utility piping or conduit to avoid damage or displacement of utility system.
2. Coordinate backfilling with utilities testing.
3. Provide 4-inch thick, concrete-base slab support for piping or conduit less than 30 inches below surface of roadways. After installing and testing, completely encase piping or conduit in a minimum of 4 inches of concrete before backfilling or placing roadway subbase.
4. Fill voids with approved backfill materials while shoring, bracing, and sheeting is removed.
5. Place and compact final backfill of satisfactory soil material to final subgrade.
6. Install warning tape directly above utilities, 12 inches below finished grade, except 6 inches below subgrade under pavements and slabs.

3.5 ROUGH GRADING

A. General: Uniformly grade areas within limits of grading under this section, including adjacent transition areas. Smooth finished surfaces with specified tolerances, compact with uniform levels or slopes between points where elevations are shown, or between such points and existing grades. In fill areas, sloped surfaces steeper than 5 horizontal to 1 vertical shall be benched so that fill materials will be placed on a level surface. All fill subgrades shall be observed by the Geotechnical Engineer.

B. Grading Outside Building Lines: Grade areas adjacent to building lines to drain away from structures and to prevent ponding. Finish surfaces free from irregular surface changes, and as follows:

1. Lawn or Unpaved Areas: Finish areas to receive topsoil to within not more than 2”' above or below required subgrade elevations.
2. Walks: Shape surface or areas under walks to line, grade and cross section, with finish surface not more than .04' above or below required subgrade elevation.
3. Pavements: Shape surface areas under pavement to line, grade and cross section, with finish surface not more than .04' for bituminous surfaces and 08' for stone surfaces, above or below required subgrade elevation.

C. Grading Surface or Fill Under Building Slabs: Grade smooth and even, free of voids, compacted as specified, and to required elevation. Provide final grades within a tolerance of .02' when tested with a 10' straightedge.

3.6 BUILDING SLAB BASE COURSE

A. General: Slab base course consists of placement of drainage fill or stone base course material, in layers of indicated thickness, over subgrade surface to support concrete building slabs.

B. Placing: Place slab base course on prepared subgrade in layers of uniform thickness, conforming to indicate cross section and thickness. Maintain optimum moisture content for compacting material during placement operations.

1. When a compacted drainage course is shown to be 6" thick or less, place material in a single layer. Where shown to be more than 6" thick, place material in equal layers, except no single layers more than 6" or less than 3" in thickness when compacted.

C. Any ruts or soft yielding spots which may occur or any areas having inadequate compaction or deviations from the requirements set forth herein shall be corrected by removing and adding uniformly graded crushed stone or by loosening crushed gravel, reshaping and recompacting. The subgrade shall have a uniform density throughout its entire depth and width and shall be approved by the A/E prior to pouring any concrete.

D. Following this preparation, the subgrade shall be protected from damage as described below:

1. The subgrade shall be protected from damage by heavy loads or equipment moving on tracks or cleats.
2. The contractor shall at all times keep the subgrade drained.
3. No concrete shall be deposited upon a frozen subgrade nor, until the subgrade has been approved by the Geo-Technical Engineer and the A/E.
4. Immediately in advance of placing concrete, the subgrade shall be sprinklered with as much water as it can readily absorb.

3.7 FINISH GRADING & PLACING TOPSOIL

A. Refer to Specification Section 329200 – “Turf and Grasses”

3.8 MAINTENANCE

A. Protection of graded areas: Protect newly graded areas from traffic and erosion. Keep free of trash and debris. Repair and re establish grades in settled, eroded and rutted areas to specified tolerances.

B. Reconditioning compacted areas: Where completed compacted areas are disturbed by subsequent construction operations or adverse weather, scarify surface, reshape, and compact to required density prior to further construction.

C. Restore areas previously occupied by stockpiled materials to match finished condition of the remainder of the work.

3.9 APPLICATION OF SOIL TREATMENT

A. Refer to Section 313116 Termite control

3.10 DISPOSAL OF EXCESS AND WASTE MATERIALS

A. Removal from Owner's Property: Remove waste materials including trash, debris, and unsuitable and excess excavated material, and dispose of off Owner's property.

3.11 FIELD QUALITY CONTROL – SOILS

A. Quality Control Testing During Construction: Allow testing service to inspect and approve subgrades and fill layers before further construction work is performed.

1. Perform field density tests in accordance with ASTM D 1556 (sand cone method) or ASTM D 2922 and D-3017(shallow depth nuclear method), as applicable.
2. Paved Areas and Building Slab Subgrade: Make at least one field density test of subgrade for every 2,000 sq. ft. of paved area or building slab area, but in no case less than 3 tests. In each compacted fill layer, make one field density test for every 2,000 sq. ft. of overlaying building slab or paved area, but in no case less than 2 tests. Field density tests shall be made at all walkway entrances and ramps into the proposed building.
3. Foundation Wall Backfill: Take enough field density tests to ensure backfill is being properly compacted.
4. Utility Trench Backfill: Perform field density tests on a spot-check basis to assist the Contractor in determining if compaction is in accordance with the specifications.
5. If in opinion of A/E, based on testing service reports and inspection, subgrade or fills which have been placed are below specified density, provide additional compaction and testing at no additional expense.
6. Footing Subgrade: For each strata of soil on which footings will be placed, conduct at least one test to verify required design bearing capacities. Subsequent evaluation and approval of each footing subgrade should be performed by Geotechnical Testing Agency.
7. Costs of testing and inspection shall be borne by the Owner.

3.12 FIELD QUALITY CONTROL - SOIL TREATMENTS

A. Pay costs for required testing of termite control materials. Samples shall be taken and analyzed by an independent testing laboratory.

B. Sampling: Test one sample of working solution for each 10,000 square feet of area applied. Take samples from discharge end of spraying equipment for each batch mixed and applied if less than 10,000 square feet.

C. Retreating: Retreat all areas if the test results average less than 90 percent of listed minimum concentration.

3.13 TESTING AND INSPECTION

A. INSPECTION AGENCY: Owner shall engage a qualified Independent Testing agency for purposes of inspecting and testing construction of embankments, fills, backfills, trenches, and subgrades and report to the A/E conformance in all particulars to specification requirements.

B. Scheduling:

1. Assign qualified personnel to be on site at all times when operations are scheduled.
2. The Contractor should note that no earthwork operation shall be permitted in their absence.

C. Responsibilities:

1. Evaluation of subgrade preparation and suitability.
2. Moisture content and field density tests on all layers of fill and backfill material placed.
3. Evaluation of degree of compaction attained for all fill and backfill material placed.
4. Testing and evaluation of borrow material.
5. Sources of borrow and of select fill.
6. Footing subgrade suitability.
7. Inspection of installation of Subdrainage system.

D. Results of Tests:

1. Make results available to the Soils Engineer and A/E immediately upon completion of areas of layers.

E. Final Report: The Inspection Agency shall prepare a written report that summarizes the work inspected during the course of the project. A discussion of all deviations from the contract documents and specifications, with their related impact on the final construction, shall be described in detail. The engineer of record shall review this final report, and recommend corrective measures (as deemed necessary) that must be made prior to final acceptance of the work. Prior to final payment, a written report certifying that the work meets the requirements of the contract documents, specifications, and all governing agencies shall be prepared, submitted, and approved by the A/E.

END OF SECTION 312000

SECTION 312319 - DEWATERING

PART 1 - GENERAL

1.1 RELATED DOCUMENTS

A. Drawings and general provisions of the Contract, including General and Supplementary Conditions and Division 01 Specification Sections, apply to this Section.

1.2 SUMMARY

A. This Section includes construction dewatering.

B. Related Sections include the following:

1. Division 01 Section "Temporary Construction Utilities, Facilities and Controls" for temporary utilities and support facilities.
2. Division 31 Section "Earth Moving" for excavating, backfilling, site grading and for site utilities.
3. Division 31 Section "Excavation Support and Protection."

1.3 PERFORMANCE REQUIREMENTS

A. Dewatering Performance: furnish, install, test, operate, monitor, and maintain dewatering system of sufficient scope, size, and capacity to control ground-water flow into excavations and permit construction to proceed on dry, stable subgrades.

1. Maintain dewatering operations to ensure erosion control, stability of excavations and constructed slopes, that excavation does not flood, and that damage to subgrades and permanent structures is prevented.
2. Prevent surface water from entering excavations by grading, dikes, well pointing or other means.
3. Accomplish dewatering without damaging existing buildings adjacent to excavation.
4. Remove dewatering system if no longer needed.

1.4 QUALITY ASSURANCE

A. Regulatory Requirements: Comply with water disposal requirements of authorities having jurisdiction.

B. Preinstallation Conference: Conduct conference at Project site to comply with requirements in Division 01 Section "Project Management and Coordination."

1.5 PROJECT CONDITIONS

A. Existing Utilities: Do not interrupt utilities serving facilities occupied by Owner or others unless permitted in writing by Construction Manager and then only after arranging to provide temporary utility services according to requirements indicated.

B. Project-Site Information: A geotechnical report has been prepared for this Project and is available for information only. The opinions expressed in this report are those of geotechnical engineer and represent interpretations of subsoil conditions, tests, and results of analyses conducted by geotechnical engineer. Owner will not be responsible for interpretations or conclusions drawn from this data.

1. Make additional test borings and conduct other exploratory operations necessary for dewatering.
2. The geotechnical report is included elsewhere in the Project Manual.

C. Survey adjacent structures and improvements, employing a qualified professional engineer or land surveyor, establishing exact elevations at fixed points to act as benchmarks. Clearly identify benchmarks and record existing elevations.

1. During dewatering, regularly resurvey benchmarks , maintaining an accurate log of surveyed elevations for comparison with original elevations. Promptly notify Architect if changes in elevations occur or if cracks, sags, or other damage is evident in adjacent construction.

PART 2 - PRODUCTS (Not Used)

PART 3 - EXECUTION

3.1 PREPARATION

A. Obtain property permits from DNREC prior to dewatering activity.

B. Protect structures, utilities, sidewalks, pavements, and other facilities from damage caused by settlement, lateral movement, undermining, washout, and other hazards created by dewatering operations.

1. Prevent surface water and subsurface or ground water from entering excavations, from ponding on prepared subgrades, and from flooding site and surrounding area.
2. Protect subgrades and foundation soils from softening and damage by rain or water accumulation.

C. Install dewatering system to ensure minimum interference with roads, streets, walks, and other adjacent occupied and used facilities.

1. Do not close or obstruct streets, walks, or other adjacent occupied or used facilities without permission from Owner and authorities having jurisdiction. Provide alternate routes around closed or obstructed traffic ways if required by authorities having jurisdiction.

3.2 INSTALLATION

A. Install dewatering system utilizing wells, well points, or similar methods complete with pump equipment, standby power and pumps, filter material gradation, valves, appurtenances, water disposal, and surface-water controls.

B. Before excavating below ground-water level, place system into operation to lower water to specified levels. Operate system continuously until drains, sewers, and structures have been constructed and fill materials have been placed, or until dewatering is no longer required.

C. Provide an adequate system to lower and control ground water to permit excavation, construction of structures, and placement of fill materials on dry subgrades. Install sufficient dewatering equipment to drain water-bearing strata above and below bottom of foundations, drains, sewers, and other excavations.

1. Do not permit open-sump pumping that leads to loss of fines, soil piping, subgrade softening, and slope instability.

D. Reduce hydrostatic head in water-bearing strata below subgrade elevations of foundations, drains, sewers, and other excavations.

1. Maintain piezometric water level below surface of excavation.

E. Dispose of water removed by dewatering in a manner that avoids endangering public health, property, and portions of work under construction or completed. Dispose of water in a manner that avoids inconvenience to others. Provide sumps, sedimentation tanks, and other flow-control devices as required by authorities having jurisdiction.

F. Provide standby equipment on-site, installed and available for immediate operation, to maintain dewatering on continuous basis if any part of system becomes inadequate or fails. If dewatering requirements are not satisfied due to inadequacy or failure of dewatering system, restore damaged structures and foundation soils at no additional expense to Owner.

1. Remove dewatering system from Project site on completion of dewatering.

G. Damages: Promptly repair damages to adjacent facilities caused by dewatering operations.

3.3 OBSERVATION WELLS

A. Provide, take measurements, and maintain at least the minimum number of observation wells or piezometers indicated and additional observation wells as may be required by authorities having jurisdiction.

B. Observe and record daily elevation of ground water and piezometric water levels in observation wells.

C. Repair or replace, within 24 hours, observation wells that become inactive, damaged, or destroyed. Suspend construction activities in areas where observation wells are not functioning properly until reliable observations can be made. Add or remove water from observation-well risers to demonstrate that observation wells are functioning properly.

1. Fill observation wells, remove piezometers, and fill holes when dewatering is completed.

END OF SECTION 312319

SECTION 315000 - EXCAVATION SUPPORT AND PROTECTION

PART 1 - GENERAL

1.1 RELATED DOCUMENTS

A. Drawings and general provisions of the Contract, including General and Supplementary Conditions and Division 01 Specification Sections, apply to this Section.

1.2 SUMMARY

A. This Section includes temporary excavation support and protection systems.

B. Related Sections include the following:

1. Division 01 Section "Temporary Construction Utilities, Facilities and Controls" for temporary utilities and support facilities.
2. Division 31 Section "Earth Moving" for excavating and backfilling and for existing utilities.
3. Division 31 Section "Dewatering" for dewatering excavations.

1.3 PERFORMANCE REQUIREMENTS

A. Design, furnish, install, monitor, and maintain excavation support and protection system capable of supporting excavation sidewalls and of resisting soil and hydrostatic pressure and superimposed and construction loads.

1. Contractor is solely responsible for maintenance of excavations and worker safety. Architect, Owner and Construction Manager bear no liability for excavation support and protection systems.
2. Provide professional engineering services needed to assume engineering responsibility where required, including preparation of Shop Drawings and a comprehensive engineering analysis by a qualified professional engineer.
3. Prevent surface water from entering excavations by grading, dikes, or other means.
4. Install excavation support and protection systems without damaging existing buildings, pavements, and other improvements adjacent to excavation.

1.4 SUBMITTALS

A. Shop Drawings for Information: Prepared by or under the supervision of a qualified professional engineer for excavation support and protection systems.

1. Include Shop Drawings signed and sealed by the qualified professional engineer responsible for their preparation.

B. Qualification Data: For Installer and professional engineer.

C. Photographs or videotape, sufficiently detailed, of existing conditions of adjoining construction and site improvements that might be misconstrued as damage caused by the absence of, the installation of, or the performance of excavation support and protection systems.

1.5 PROJECT CONDITIONS

A. Existing Utilities: Do not interrupt utilities serving facilities occupied by Owner or others unless permitted in writing by Architect and then only after arranging to provide temporary utility services according to requirements indicated.

B. Project-Site Information: A geotechnical report has been prepared for this Project and is available for information only. The opinions expressed in this report are those of geotechnical engineer and represent

interpretations of subsoil conditions, tests, and results of analyses conducted by geotechnical engineer. Owner will not be responsible for interpretations or conclusions drawn from this data.

1. Make additional test borings and conduct other exploratory operations necessary for excavation support and protection.
2. The geotechnical report is included elsewhere in the Project Manual.

C. Survey adjacent structures and improvements, employing a qualified professional engineer or land surveyor; establish exact elevations at fixed points to act as benchmarks. Clearly identify benchmarks and record existing elevations.

1. During installation of excavation support and protection systems, regularly resurvey benchmarks, maintaining an accurate log of surveyed elevations and positions for comparison with original elevations and positions. Promptly notify Architect if changes in elevations or positions occur or if cracks, sags, or other damage is evident in adjacent construction.

PART 2 - PRODUCTS (Not Used)

PART 3 - EXECUTION

3.1 PREPARATION

A. Protect structures, utilities, sidewalks, pavements, and other facilities from damage caused by settlement, lateral movement, undermining, washout, and other hazards that could develop during excavation support and protection system operations.

1. Shore, support, and protect utilities encountered.

B. Install excavation support and protection systems to ensure minimum interference with roads, streets, walks, and other adjacent occupied and used facilities.

1. Do not close or obstruct streets, walks, or other adjacent occupied or used facilities without permission from Owner and authorities having jurisdiction. Provide alternate routes around closed or obstructed traffic ways if required by authorities having jurisdiction.

C. Locate excavation support and protection systems clear of permanent construction so that forming and finishing of concrete surfaces is not impeded.

D. Monitor excavation support and protection systems daily during excavation progress and for as long as excavation remains open. Promptly correct bulges, breakage, or other evidence of movement to ensure that excavation support and protection systems remain stable.

E. Promptly repair damages to adjacent facilities caused by installing excavation support and protection systems.

3.2 REMOVAL AND REPAIRS

A. Remove excavation support and protection systems when construction has progressed sufficiently to support excavation and bear soil and hydrostatic pressures. Remove in stages to avoid disturbing underlying soils or damaging structures, pavements, facilities, and utilities.

1. Repair or replace, as approved by Architect, adjacent work damaged or displaced by removing excavation support and protection systems.

END OF SECTION 315000

SECTION 321216 - ASPHALT PAVING

PART 1 - GENERAL

1.1 RELATED DOCUMENTS

A. Drawings and general provisions of the Contract, including General and Supplementary Conditions and Division 01 Specification Sections, apply to this Section.

1.2 SUMMARY

A. This Section includes the following:

1. Hot-mix asphalt paving.
2. Hot-mix asphalt patching.
3. Hot-mix asphalt paving overlay.
4. Asphalt surface treatments.
5. Pavement-marking paint.
6. Cold milling of existing hot-mix asphalt pavement.

B. Related Sections include the following:

1. Division 31 Section "Earth Moving" for aggregate subbase and base courses and for aggregate pavement shoulders.

1.3 DEFINITIONS

A. Hot-Mix Asphalt Paving Terminology: Refer to ASTM D 8 for definitions of terms.

B. DOT: Delaware Department of Transportation.

1.4 SYSTEM DESCRIPTION

A. Provide hot-mix asphalt paving according to materials, workmanship, and other applicable requirements of Specifications for Road and Bridge Construction of the Delaware Department of Transportation.

1. Standard Specification: Division 400
2. Measurement and payment provisions and safety program submittals included in standard specifications do not apply to this Section.

1.5 SUBMITTALS

A. Product Data: For each type of product indicated. Include technical data and tested physical and performance properties.

B. Job-Mix Designs: Certification, by authorities having jurisdiction, of approval of each job mix proposed for the Work.

C. Job-Mix Designs: For each job mix proposed for the Work.

D. Qualification Data: For manufacturer.

E. Material Test Reports: For each paving material.

F. Material Certificates: For each paving material, signed by manufacturers.

1.6 QUALITY ASSURANCE

A. Manufacturer Qualifications: A qualified manufacturer.

1. Manufacturer shall be a paving-mix manufacturer registered with and approved by authorities having jurisdiction or the DOT of the state in which Project is located.

B. Testing Agency Qualifications: Qualified according to ASTM D 3666 for testing indicated, as documented according to ASTM E 548.

C. Regulatory Requirements: Comply with Delaware Department of Transportation Specifications for Road and Bridge Construction for asphalt paving work. All work within DelDOT Right of Way shall conform to the Delaware Department of Transportation Specifications for Road and Bridge Construction.

D. Asphalt-Paving Publication: Comply with AI MS-22, "Construction of Hot Mix Asphalt Pavements," unless more stringent requirements are indicated.

E. Preinstallation Conference: Conduct conference at Project site to comply with requirements in Division 01 Section "Project Management and Coordination."

F. Preinstallation Conference: Conduct conference at Project site to comply with requirements in Division 01 Section "Project Management and Coordination." Review methods and procedures related to hot-mix asphalt paving including, but not limited to, the following:

1. Review proposed sources of paving materials, including capabilities and location of plant that will manufacture hot-mix asphalt.
2. Review condition of subgrade and preparatory work.
3. Review requirements for protecting paving work, including restriction of traffic during installation period and for remainder of construction period.
4. Review and finalize construction schedule and verify availability of materials, Installer's personnel, equipment, and facilities needed to make progress and avoid delays.

1.7 DELIVERY, STORAGE, AND HANDLING

A. Deliver pavement-marking materials to Project site in original packages with seals unbroken and bearing manufacturer's labels containing brand name and type of material, date of manufacture, and directions for storage.

B. Store pavement-marking materials in a clean, dry, protected location within temperature range required by manufacturer. Protect stored materials from direct sunlight.

1.8 PROJECT CONDITIONS

A. Environmental Limitations: Do not apply asphalt materials if subgrade is wet or excessively damp. Adhere to all specifications in Delaware Department of Transportation Specifications for Road and Bridge Construction.

B. Pavement-Marking Paint: Proceed with pavement marking only on clean, dry surfaces and at minimum ambient or surface temperatures specified in the Delaware Department of Transportation Specifications for Road and Bridge Construction.

PART 2 - PRODUCTS

2.1 MATERIALS

A. Materials: All materials used under this section shall conform to the requirements of Delaware Department of Transportation Specifications for Road and Bridge Construction, including, but not limited to: graded aggregate, asphalt cement, and tack coat.

B. Herbicide Treatment: Commercial chemical for weed control, registered by Environmental Protection Agency. Provide granular, liquid or wettable powder form. Obtain written approval from the Delaware Department of Natural Resources and Environmental Control prior to application of the herbicide.

1. Manufacturers: Subject to compliance with requirements, provide products of one of the following:

a. Ciba-Geigy Corp.
b. Dow Chemical, USA
c. E.I. Du Pont de Nemours & Co., Inc.
d. FMC Corp
e. Thompson-Hayward Chemical Co.
f. U.S. Borax and Chemical Corp.
g. Allied Chemical Corp.
h. Ag-Chem Products, Inc.

C. Lane Marking Paint: Paint shall comply with Division 700 of the Delaware Department of Transportation Specifications for Road and Bridge Construction.

1. Color: White
2. Color: Yellow
3. Color: Blue

D. Joint Sealants: Joint Sealants shall comply with Delaware Department of Transportation Specifications for Road and Bridge Construction, Divisions 700 & 800.

2.2 MIXES

A. Hot-Mix Asphalt: Provide Plant Mixed, hot-laid, asphalt-aggregate mixture complying with Delaware Department of Transportation Specifications for Road and Bridge Construction, Division 400 and referred Divisions.

PART 3 - EXECUTION

3.1 SURFACE PREPARATION

A. Verify that subgrade is dry and in suitable condition to support paving and imposed loads. Sweep loose granular particles from surface of unbound-aggregate base course. Do not dislodge or disturb aggregate embedded in compacted surface of base course.

B. Proof-roll subbase using heavy, pneumatic-tired rollers to locate areas that are unstable or that require further compaction.

C. Herbicide Treatment: Apply herbicide according to manufacturer's recommended rates and written application instructions. Apply to dry, prepared subgrade or surface of compacted-aggregate base before applying paving materials.

1. Mix herbicide with if formulated by manufacturer for that purpose.
2. Remove spillages and clean affected surfaces.

D. Proceed with paving only after unsatisfactory conditions have been corrected.

E. Tack Coat: Apply to contact surfaces of previously constructed asphalt or Portland cement concrete and surfaces abutting or projecting into hot-mixed asphalt pavement. Distribute at a rate of 0.05 to 0.15 gal. Per sq. yd. of surface in accordance Section 401 of the Delaware Department of Transportation Specifications for Road and Bridge Construction.

F. Allow to dry until at proper condition to receive paving.

G. Exercise care in applying bituminous materials to avoid smearing of adjoining concrete surfaces. Remove and clean damaged surfaces.

3.2 COLD MILLING

A. Clean existing pavement surface of loose and deleterious material immediately before cold milling. Remove existing asphalt pavement by cold milling to grades and cross sections indicated.

1. Mill to a depth of as specified on plans.
2. Mill to a uniform finished surface free of gouges, grooves, and ridges.
3. Control rate of milling to prevent tearing of existing asphalt course.
4. Repair or replace curbs, manholes, and other construction damaged during cold milling.
5. Excavate and trim unbound-aggregate base course, if encountered, and keep material separate from milled hot-mix asphalt.
6. Transport milled hot-mix asphalt to asphalt recycling facility.
7. Keep milled pavement surface free of loose material and dust.

3.3 PATCHING

A. Hot-Mix Asphalt Pavement: Saw cut perimeter of patch and excavate existing pavement section to sound base. Excavate rectangular or trapezoidal patches, extending 12 inches into adjacent sound pavement, unless otherwise indicated. Cut excavation faces vertically. Remove excavated material. Recompact existing unbound-aggregate base course to form new subgrade.

B. Portland Cement Concrete Pavement: Break cracked slabs and roll as required to reseat concrete pieces firmly.

1. Pump hot undersealing asphalt under rocking slabs until slab is stabilized or, if necessary, crack slab into pieces and roll to reseat pieces firmly.
2. Remove disintegrated or badly cracked pavement. Excavate rectangular or trapezoidal patches, extending into adjacent sound pavement, unless otherwise indicated. Cut excavation faces vertically. Recompact existing unbound-aggregate base course to form new subgrade.

C. Tack Coat: Apply uniformly to vertical surfaces abutting or projecting into new, hot-mix asphalt paving at a rate of 0.05 to 0.15 gal./sq. yd..

1. Allow tack coat to cure undisturbed before applying hot-mix asphalt paving.
2. Avoid smearing or staining adjoining surfaces, appurtenances, and surroundings. Remove spillages and clean affected surfaces.

D. Patching: Fill excavated pavements with hot-mix asphalt base mix and, while still hot, compact flush with adjacent surface.

E. Patching: Partially fill excavated pavements with hot-mix asphalt base mix and, while still hot, compact. Cover asphalt base course with compacted, hot-mix surface layer finished flush with adjacent surfaces.

3.4 REPAIRS

A. Leveling Course: Install and compact leveling course consisting of hot-mix asphalt surface course to level sags and fill depressions deeper than 1 inch in existing pavements.

1. Install leveling wedges in compacted lifts not exceeding 3 inches thick.

B. Crack and Joint Filling: Remove existing joint filler material from cracks or joints to a depth of 1/4 inch.

1. Clean cracks and joints in existing hot-mix asphalt pavement.
2. All cracks greater than 1/8th inch but less than 1/2 inch shall be cleaned to a depth of 1 inch and sealed with hot bitumastic sealer.
3. All cracks greater than 1/2 inch shall be sealed using a slurry seal containing fine sand aggregate. Fill flush with surface of existing pavement and remove excess.
4. Longitudinal cracks shall be sealed using a pavement repair membrane such as paveprep or equal as noted on the construction plans.

3.5 HOT-MIX ASPHALT PLACING

A. Machine place hot-mix asphalt on prepared surface, spread uniformly, and strike off. Place asphalt mix by hand to areas inaccessible to equipment in a manner that prevents segregation of mix. Place each course to required grade, cross section, and thickness when compacted.

1. Place hot-mix asphalt base course in number of lifts and thicknesses indicated.
2. Place hot-mix asphalt surface course in single lift.
3. Spread mix at minimum temperature of 225 deg F.
4. Begin applying mix along centerline of crown for crowned sections and on high side of one-way slopes, unless otherwise indicated.
5. Regulate paver machine speed to obtain smooth, continuous surface free of pulls and tears in asphalt-paving mat.

B. Place paving in consecutive strips not less than 10 feet wide unless infill edge strips of a lesser width are required.

1. After first strip has been placed and rolled, place succeeding strips and extend rolling to overlap previous strips. Complete a section of asphalt base course before placing asphalt surface course.

C. Immediately correct surface irregularities in paving course behind paver. Use suitable hand tools to remove excess material forming high spots. Fill depressions with hot-mix asphalt to prevent segregation of mix; use suitable hand tools to smooth surface.

3.6 JOINTS

A. Construct joints to ensure a continuous bond between adjoining paving sections. Construct joints free of depressions with same texture and smoothness as other sections of hot-mix asphalt course. Joints shall comply with Delaware Department of Transportation Specifications for Road and Bridge Construction, Section 401.12.

1. Clean contact surfaces and apply tack coat to joints.
2. Offset longitudinal joints, in successive courses, a minimum of 6 inches.
3. Offset transverse joints, in successive courses, a minimum of 24 inches.

4. Construct transverse joints as described in AI MS-22, "Construction of Hot Mix Asphalt Pavements."
5. Compact joints as soon as hot-mix asphalt will bear roller weight without excessive displacement.
6. Compact asphalt at joints to a density within 2 percent of specified course density.

3.7 COMPACTION

A. General: Begin compaction as soon as placed hot-mix paving will bear roller weight without excessive displacement. Compact hot-mix paving with hot, hand tampers or vibratory-plate compactors in areas inaccessible to rollers.

1. Complete compaction before mix temperature cools to 185 deg F.

B. Breakdown Rolling: Complete breakdown or initial rolling immediately after rolling joints and outside edge. Examine surface immediately after breakdown rolling for indicated crown, grade, and smoothness. Correct laydown and rolling operations to comply with requirements.

C. Intermediate Rolling: Begin intermediate rolling immediately after breakdown rolling while hot-mix asphalt is still hot enough to achieve specified density. Continue rolling until hot-mix asphalt course has been uniformly compacted to the following density:

1. Average Density: 98 percent of reference laboratory density according to AASHTO T 209, but not less than 96 percent nor greater than 100 percent.
2. Average Density: 92 percent of reference maximum theoretical density according to ASTM D 2041, but not less than 90 percent nor greater than 96 percent.

D. Finish Rolling: Finish roll paved surfaces to remove roller marks while hot-mix asphalt is still warm.

E. Edge Shaping: While surface is being compacted and finished, trim edges of pavement to proper alignment. Bevel edges while asphalt is still hot; compact thoroughly.

F. Repairs: Remove paved areas that are defective or contaminated with foreign materials and replace with fresh, hot-mix asphalt. Compact by rolling to specified density and surface smoothness.

G. Protection: After final rolling, do not permit vehicular traffic on pavement until it has cooled and hardened.

H. Erect barricades to protect paving from traffic until mixture has cooled enough not to become marked.

3.8 INSTALLATION TOLERANCES

A. Thickness: Compact each course to produce the thickness indicated within the following tolerances:

1. Base Course: Plus or minus 1/2 inch.
2. Surface Course: Plus 1/4 inch, no minus.

B. Surface Smoothness: Compact each course to produce a surface smoothness within the following tolerances as determined by using a 10-foot straightedge applied transversely or longitudinally to paved areas:

1. Base Course: 1/4 inch.
2. Surface Course: 1/8 inch.
3. Crowned Surfaces: Test with crowned template centered and at right angle to crown. Maximum allowable variance from template is 1/4 inch.

3.9 PAVEMENT MARKING

A. Do not apply pavement-marking paint until layout, colors, and placement have been verified with Architect.

B. Contractor shall provide striping on parking and roadway surfaces as indicated on the plans. The following is a list of all required striping:

1. Parking stalls.
2. Cross-hatch/gore areas.
3. Handicap Parking symbols.
4. Stop bars.
5. Directional arrows.
6. Lane lines.
7. Words/numbers.

C. Allow paving to age for 30 days before starting pavement marking.

D. Sweep and clean surface to eliminate loose material and dust.

E. Apply paint with mechanical equipment to produce pavement markings, of dimensions indicated, with uniform, straight edges. Apply at manufacturer's recommended rates to provide a minimum wet film thickness of 15 mils.

1. Broadcast glass spheres uniformly into wet pavement markings at a rate of 6 lb/gal. for all markings with the exception of parking stall lines.

3.10 WHEEL STOPS

A. Securely attach wheel stops into pavement with not less than two galvanized steel dowels embedded at one-quarter to one-third points. Securely install dowels into pavement and bond to wheel stop. Recess head of dowel beneath top of wheel stop.

3.11 FIELD QUALITY CONTROL

A. Testing Agency: Owner will engage a qualified independent testing and inspecting agency to perform field tests and inspections and to prepare test reports.

1. Testing agency will conduct and interpret tests and state in each report whether tested Work complies with or deviates from specified requirements.

B. Additional testing and inspecting, at Contractor's expense, will be performed to determine compliance of replaced or additional work with specified requirements.

C. Thickness: In-place compacted thickness of hot-mix asphalt courses will be determined according to ASTM D 3549.

D. Surface Smoothness: Finished surface of each hot-mix asphalt course will be tested for compliance with smoothness tolerances.

E. In-Place Density: Testing agency will take samples of uncompacted paving mixtures and compacted pavement according to ASTM D 979 or AASHTO T 168.

1. Reference maximum theoretical density will be determined by averaging results from four samples of hot-mix asphalt-paving mixture delivered daily to site, prepared according to ASTM D 2041, and compacted according to job-mix specifications.

2. In-place density of compacted pavement will be determined by testing core samples according to ASTM D 1188 or ASTM D 2726.

   a. One core sample will be taken for every 1000 sq. yd. or less of installed pavement, with no fewer than 3 cores taken.
   b. Field density of in-place compacted pavement may also be determined by nuclear method according to ASTM D 2950 and correlated with ASTM D 1188 or ASTM D 2726.

F. Remove and replace or install additional hot-mix asphalt where test results or measurements indicate that it does not comply with specified requirements.

3.12 DISPOSAL

A. Except for material indicated to be recycled, remove excavated materials from Project site and legally dispose of them in an EPA-approved landfill.

1. Do not allow excavated materials to accumulate on-site.

END OF SECTION 321216

SECTION 321313 - CONCRETE PAVING

PART 1 - GENERAL

1.1 RELATED DOCUMENTS

A. Drawings and general provisions of the Contract, including General and Supplementary Conditions and Division 01 Specification Sections, apply to this Section.

1.2 SUMMARY

A. This Section includes exterior cement concrete pavement for the following:

1. Driveways and roadways.
2. Parking lots.
3. Curbs and gutters.
4. Walkways.

B. Related Sections include the following:

1. Division 03 Section "Cast-in-Place Concrete" for general building applications of concrete.
2. Division 31 Section "Earth Moving" for subgrade preparation, grading, and subbase course.
3. Division 32 Section "Concrete Paving Joint Sealants" for joint sealants of joints in concrete pavement and at isolation joints of concrete pavement with adjacent construction.

1.3 DEFINITIONS

A. Cementitious Materials: Portland cement alone or in combination with one or more of blended hydraulic cement, fly ash and other pozzolans, and ground granulated blast-furnace slag.

1.4 SUBMITTALS

A. Product Data: For each type of manufactured material and product indicated.

B. Design Mixtures: For each concrete pavement mixture. Include alternate mixture designs when characteristics of materials, Project conditions, weather, test results, or other circumstances warrant adjustments.

C. Samples: 10-lbsample of exposed aggregate.

D. Qualification Data: For manufacturer. Manufacturer of ready-mixed concrete products complying with ASTM C 94 requirements for production facilities and equipment.

E. Material Test Reports: Construction Manager will engage a qualified testing agency for indicating and interpreting test results for compliance of the following with requirements indicated, based on comprehensive testing of current materials:

1. Aggregates. Include service record data indicating absence of deleterious expansion of concrete due to alkali-aggregate reactivity.

F. Material Certificates: Signed by manufacturers certifying that each of the following materials complies with requirements:

1. Cementitious materials.
2. Steel reinforcement and reinforcement accessories.

3. Fiber reinforcement.
4. Admixtures.
5. Curing compounds.
6. Applied finish materials.
7. Bonding agent or epoxy adhesive.
8. Joint fillers.

G. Field quality-control test reports.

H. For plazas and wide walkways, submit control joint spacing plan for review.

I. Minutes of preinstallation conference.

1.5 QUALITY ASSURANCE

A. Manufacturer Qualifications: Manufacturer of ready-mixed concrete products who complies with ASTM C 94/C 94M requirements for production facilities and equipment.

1. Manufacturer certified according to NRMCA's "Certification of Ready Mixed Concrete Production Facilities."

B. Testing Agency Qualifications: An independent agency qualified according to ASTM C 1077 and ASTM E 329 for testing indicated, as documented according to ASTM E 548.

1. Personnel conducting field tests shall be qualified as ACI Concrete Field Testing Technician, Grade 1, according to ACI CP-01 or an equivalent certification program.

C. ACI Publications: Comply with ACI 301, "Specification for Structural Concrete," unless modified by requirements in the Contract Documents.

D. Concrete Testing Service: Engage a qualified independent testing agency to perform material evaluation tests and to design concrete mixtures.

E. Mockups: Build mockups to verify selections made under sample submittals and to demonstrate aesthetic effects and set quality standards for materials and execution.

1. Build mockups of full-thickness sections of concrete paving to demonstrate typical joints; surface finish, texture, and color; curing; and standard of workmanship.
2. Build mockups of concrete paving in the location and of the size indicated or, if not indicated, build mockups where directed by Architect and not less than 96 inches by 96 inches
3. Approval of mockups does not constitute approval of deviations from the Contract Documents contained in mockups unless Architect specifically approves such deviations in writing.
4. Approved mockups may become part of the completed Work if undisturbed at time of Substantial Completion.

F. Preinstallation Conference: Conduct conference at Project site to comply with requirements in Division 01 Section "Project Management and Coordination."

1. Before submitting design mixtures, review concrete pavement mixture design and examine procedures for ensuring quality of concrete materials and concrete pavement construction practices. Require representatives, including the following, of each entity directly concerned with concrete pavement, to attend conference:

a. Contractor's superintendent.
b. Independent testing agency responsible for concrete design mixtures.
c. Ready-mix concrete producer.

d. Concrete pavement subcontractor.

1.6 PROJECT CONDITIONS

A. Traffic Control: Maintain access for vehicular and pedestrian traffic as required for other construction activities.

PART 2 - PRODUCTS

2.1 MANUFACTURERS

A. In other Part 2 articles where titles below introduce lists, the following requirements apply to product selection:

1. Available Products: Subject to compliance with requirements, products that may be incorporated into the Work include, but are not limited to, products specified.
2. Products: Subject to compliance with requirements, provide one of the products specified.
3. Available Manufacturers: Subject to compliance with requirements, manufacturers offering products that may be incorporated into the Work include, but are not limited to, manufacturers specified.
4. Manufacturers: Subject to compliance with requirements, provide products by one of the manufacturers specified.

2.2 FORMS

A. Form Materials: Plywood, metal, metal-framed plywood, or other approved panel-type materials to provide full-depth, continuous, straight, smooth exposed surfaces.

1. Use flexible or curved forms for curves with a radius 100 feet or less.

B. Form-Release Agent: Commercially formulated form-release agent that will not bond with, stain, or adversely affect concrete surfaces and will not impair subsequent treatments of concrete surfaces.

2.3 STEEL REINFORCEMENT

A. Plain-Steel Welded Wire Reinforcement: ASTM A 185, fabricated from as-drawn steel wire into flat sheets.

B. Deformed-Steel Welded Wire Reinforcement: ASTM A 497, flat sheet.

C. Epoxy-Coated Welded Wire Fabric: ASTM A 884/A 884M, Class A, plain steel.

D. Reinforcing Bars: ASTM A 615/A 615M, Grade 60; deformed.

E. Galvanized Reinforcing Bars: ASTM A 767/A 767M, Class II zinc coated, hot-dip galvanized after fabrication and bending; with ASTM A 615/A 615M, Grade 60 deformed bars.

F. Epoxy-Coated Reinforcing Bars: ASTM A 775/A 775M or ASTM A 934/A 934M; with ASTM A 615/A 615M, Grade 60 deformed bars.

G. Steel Bar Mats: ASTM A 184/A 184M; with ASTM A 615/A 615M, Grade 60, deformed bars; assembled with clips.

H. Plain Steel Wire: ASTM A 82, as drawn.

I. Deformed-Steel Wire: ASTM A 496.

J. Epoxy-Coated-Steel Wire: ASTM A 884/A 884M, Class A coated, plain.

K. Joint Dowel Bars: Plain steel bars, ASTM A 615/A 615M, Grade 60. Cut bars true to length with ends square and free of burrs.

L. Epoxy-Coated Joint Dowel Bars: ASTM A 775/A 775M; with ASTM A 615/A 615M, Grade 60, plain steel bars.

M. Tie Bars: ASTM A 615/A 615M, Grade 60, deformed.

N. Bar Supports: Bolsters, chairs, spacers, and other devices for spacing, supporting, and fastening reinforcing bars, welded wire reinforcement, and dowels in place. Manufacture bar supports according to CRSI's "Manual of Standard Practice" from steel wire, plastic, or precast concrete of greater compressive strength than concrete, and as follows:

1. Equip wire bar supports with sand plates or horizontal runners where base material will not support chair legs.
2. For epoxy-coated reinforcement, use epoxy-coated or other dielectric-polymer-coated wire bar supports.

O. Epoxy Repair Coating: Liquid two-part epoxy repair coating, compatible with epoxy coating on reinforcement.

P. Zinc Repair Material: ASTM A 780.

2.4 CONCRETE MATERIALS

A. Materials: All materials including but not limited to reinforcing materials, concrete materials, concrete mix, admixtures, curing materials, traffic paint and other related materials used under this section shall conform to the requirements of the Delaware Department of Transportation Specifications for Road and Bridge Construction. References to a required class of concrete shall correspond to the classes as shown in the State of Delaware Department of Transportation Specifications for Road and Bridge Construction Division 500 and Division 800.

B. Fly ash shall meet the approval of the ASTM C-618 pozzolan Class F and may be used as a partial substitute for cement when approved by the Architect.

C. The concrete mix used in performing this work shall be DelDOT Class “A” or DelDOT Class “B” depending on the compressive strength shown on the details and shall meet the approval of the Architect.

D. The concrete temperature shall not exceed 90°F when delivered to the job-site or at any time prior to placement in the forms.

E. Type I - Portland Cement: Shall be used from October 1 through May 1 and when the air temperature in the shade and away from artificial heat is above 70°F or less, or as directed by the Architect.

A. Type II - Portland Cement: Shall be used from May 1 through October 1 and when the air temperature in the shade and away from artificial heat is above 70°F, or as directed by the Architect.

F. When approved by the Architect, Hi-Early strength concrete may be used. Approval will be on a case by case basis.

G. Exposed Aggregate: Selected, hard, and durable; washed; free of materials with deleterious reactivity to cement or that cause staining; from a single source, with gap-graded coarse aggregate as follows:

1. Aggregate Sizes: 1/2 to 3/4 inch nominal.
2. Aggregate Source, Shape, and Color: Submit color samples for review by Architect and owner

H. Water: ASTM C 94/C 94M.

I. Air-Entraining Admixture: ASTM C 260.

J. Chemical Admixtures: Admixtures may only be use with prior approval by the Architect. Provide admixtures certified by manufacturer to be compatible with other admixtures and to contain not more than 0.1 percent water-soluble chloride ions by mass of cementitious material.

1. Water-Reducing Admixture: ASTM C 494/C 494M, Type A.
2. Retarding Admixture: ASTM C 494/C 494M, Type B.
3. Water-Reducing and Retarding Admixture: ASTM C 494/C 494M, Type D.
4. High-Range, Water-Reducing Admixture: ASTM C 494/C 494M, Type F.
5. High-Range, Water-Reducing and Retarding Admixture: ASTM C 494/C 494M, Type G.
6. Plasticizing and Retarding Admixture: ASTM C 1017/C 1017M, Type II.

2.5 FIBER REINFORCEMENT

A. Synthetic Fiber: fibrillated polypropylene fibers engineered and designed for use in concrete pavement, complying with ASTM C 1116, Type III, 1/2 to 1-1/2 inches long.

1. Available Products:

a. Fibrillated Fibers:

1) Axim Concrete Technologies; Fibrasol F.
2) FORTA Corporation; Forta.
3) Euclid Chemical Company (The); Fiberstrand F.
4) Grace, W. R. & Co.--Conn.; Grace Fibers.
5) SI Concrete Systems; Fibermesh.

2.6 CURING MATERIALS

A. Absorptive Cover: AASHTO M 182, Class 2, burlap cloth made from jute or kenaf, weighing approximately 9 oz./sq. yd. dry.

B. Moisture-Retaining Cover: ASTM C 171, polyethylene film or white burlap-polyethylene sheet.

C. Water: Potable.

D. Evaporation Retarder: Waterborne, monomolecular film forming; manufactured for application to fresh concrete.

1. Available Products:

a. Axim Concrete Technologies; Cimfilm.
b. Burke by Edeco; BurkeFilm.
c. ChemMasters; Spray-Film.
d. Conspec Marketing & Manufacturing Co., Inc.; Aquafilm.
e. Dayton Superior Corporation; Sure Film.
f. Euclid Chemical Company (The); Eucobar.
g. Kaufman Products, Inc.; Vapor Aid.
h. Lambert Corporation; Lambco Skin.
i. L&M Construction Chemicals, Inc.; E-Con.

j. MBT Protection and Repair, ChemRex Inc.; Confilm.
k. Meadows, W. R., Inc.; Sealtight Evapre.
l. Metalcrete Industries; Waterhold.
m. Nox-Crete Products Group, Kinsman Corporation; Monofilm.
n. Sika Corporation, Inc.; SikaFilm.
o. Symons Corporation; Finishing Aid.
p. Vexcon Chemicals, Inc.; Certi-Vex EnvioAssist.

E. White Waterborne Membrane-Forming Curing Compound: ASTM C 309, Type 2, Class B.

1. Available Products:

a. Anti-Hydro International, Inc.; AH Curing Compound #2 WP WB.
b. Burke by Edoco; Resin Emulsion White.
c. ChemMasters; Safe-Cure 2000.
d. Conspec Marketing & Manufacturing Co., Inc.; W.B. Resin Cure.
e. Dayton Superior Corporation; Day-Chem White Pigmented Cure (J-10-W).
f. Euclid Chemical Company (The); Kurez VOX White Pigmented.
g. Kaufman Products, Inc.; Thinfilm 450.
h. Lambert Corporation; Aqua Kure-White.
i. L&M Construction Chemicals, Inc.; L&M Cure R-2.
j. Meadows, W. R., Inc.; 1200-White.
k. Symons Corporation; Resi-Chem White.
l. Tamms Industries, Inc.; Horncure 200-W.
m. Unitex; Hydro White.
n. Vexcon Chemicals, Inc.; Certi-Vex Enviocure White 100.

2.7 RELATED MATERIALS

A. Expansion- and Isolation-Joint-Filler Strips: ASTM D 1751, asphalt-saturated cellulosic fiber or ASTM D 1752, cork or self-expanding cork.

B. Bonding Agent: ASTM C 1059, Type II, non-redispersible, acrylic emulsion or styrene butadiene.

C. Epoxy Bonding Adhesive: ASTM C 881, two-component epoxy resin, capable of humid curing and bonding to damp surfaces, of class suitable for application temperature and of grade to requirements, and as follows:

1. Types IV and V, load bearing, for bonding hardened or freshly mixed concrete to hardened concrete.

D. Chemical Surface Retarder: (For exposed aggregate concrete) Water-soluble, liquid-set retarder with color dye, for horizontal concrete surface application, capable of temporarily delaying final hardening of concrete to a depth of 1/8 to 1/4 inch.

1. Products:

a. Burke by Edeco; True Etch Surface Retarder.
b. ChemMasters; Exposee.
c. Conspec Marketing & Manufacturing Co., Inc.; Delay S.
d. Euclid Chemical Company (The); Surface Retarder S.
e. Kaufman Products, Inc.; Expose.
f. Metalcrete Industries; Surftard.
g. Nox-Crete Products Group, Kinsman Corporation; Crete-Nox TA.
h. Scofield, L. M. Company; Lithotex.
i. Sika Corporation, Inc.; Rugasol-S.

j. Vexcon Chemicals, Inc.; Certi-Vex Envioset.

2.8 WHEEL STOPS

A. Wheel Stops: Solid, 3000 PSI concrete, precast.

1. Dowels: Galvanized steel, 3/4-inch diameter, 10-inch minimum length.

2.9 ADA TRUNCATED DOMES

A. General: In-line replacable designed to be installed in a “wet set” condition. Units must include anchors which allow replacement by removing colored covers and bolts while leaving anchors in place.

B. Materials: Homogenous glass and carbon reinforced composite

1. UV stable and colorfast.
2. Resistant to slat and chemical staining per ASTM B 117 & 1308.
3. Minimum Compressive and Tensile Strength of 28,900 psi and 11,600 psi respectively.
4. Must be able to handle load bearing capacity of 16,000 lbs per AASHO –H20 with no visible damage.
5. Color must be uniform throughout with no paint or coating to provide color.
6. Dome geometry must comply with ADA regulations for detectable warnings at curb ramps in diameter, height and spacing.

C. Where installation on radius is shown, provide precut and scored units for installation without gaps and piecemeal infills. Field cut rectangular units will not be acceptable.

D. Units shall be by ADA Solutions, Inc. or approved equal.

2.10 CONCRETE MIXTURES

A. The concrete mix used in performing this work shall be DelDOT Class “A” or DelDOT Class “B” depending on the compressive strength shown on the details and shall meet the approval of the Architect.

B. Prepare design mixtures, proportioned according to ACI 301, for each type and strength of normal-weight concrete determined by either laboratory trial mixes or field experience.

1. Use a qualified independent testing agency for preparing and reporting proposed concrete mixture designs for the trial batch method.

C. Proportion mixtures to provide normal-weight concrete with the following properties:

1. Compressive Strength (28 Days): 4000 psi or 3000 psi. depending on location
2. Maximum Water-Cementitious Materials Ratio at Point of Placement: 0.50.
3. Slump Limit: 2-5, plus or minus 1 inch.

D. Add air-entraining admixture at manufacturer's prescribed rate to result in normal-weight concrete at point of placement having an air content as follows:

1. Air Content: 6 percent plus or minus 1.5 percent for 1-inch nominal maximum aggregate size.

E. Limit water-soluble, chloride-ion content in hardened concrete to 0.15 percent by weight of cement.

F. Chemical Admixtures: Use admixtures according to manufacturer's written instructions.

1. Use water-reducing admixture, plasticizing and retarding admixture in concrete, as required, for placement and workability.
2. Use water-reducing and retarding admixture when required by high temperatures, low humidity, or other adverse placement conditions.

G. Cementitious Materials: Limit percentage, by weight, of cementitious materials other than portland cement according to ACI 301 requirements for concrete exposed to deicing chemicals. Limits shall be as follows per DelDOT requirements:

1. Fly Ash or Pozzolan: 25 percent.
2. Ground Granulated Blast-Furnace Slag: 50 percent.
3. Combined Fly Ash or Pozzolan, and Ground Granulated Blast-Furnace Slag: 50 percent, with fly ash or pozzolan not exceeding 25 percent.

H. Synthetic Fiber: Uniformly disperse in concrete mix at manufacturer's recommended rate, but not less than 1.0 lb/cu. yd..

2.11 CONCRETE MIXING

A. Ready-Mixed Concrete: Measure, batch, and mix concrete materials and concrete according to ASTM C 94/C 94M and ASTM C 1116 where synthetic fibers are noted on the plans. Furnish batch certificates for each batch discharged and used in the Work.

1. When air temperature is between 85 deg F and 90 deg F, reduce mixing and delivery time from 1-1/2 hours to 75 minutes; when air temperature is above 90 deg F, reduce mixing and delivery time to 60 minutes.

PART 3 - EXECUTION

3.1 EXAMINATION

A. Examine exposed subgrades and subbase surfaces for compliance with requirements for dimensional, grading, and elevation tolerances.

B. Proof-roll prepared subbase surface below concrete pavements with heavy pneumatic-tired equipment to identify soft pockets and areas of excess yielding.

1. Completely proof-roll subbase in one direction and repeat in perpendicular direction. Limit vehicle speed to 3 mph.
2. Proof-roll with a loaded 10-wheel tandem-axle dump truck weighing not less than 15 tons.
3. Subbase with soft spots and areas of pumping or rutting exceeding depth of 1/2 inch require correction according to requirements in Division 31 Section "Earth Moving."

C. Proceed with concrete pavement operations only after nonconforming conditions have been corrected and subgrade is ready to receive pavement.

3.2 PREPARATION

A. Remove loose material from compacted subbase surface immediately before placing concrete.

3.3 EDGE FORMS AND SCREED CONSTRUCTION

A. Set, brace, and secure edge forms, bulkheads, and intermediate screed guides for pavement to required lines, grades, and elevations. Install forms to allow continuous progress of work and so forms can remain in place at least 24 hours after concrete placement.

B. Clean forms after each use and coat with form-release agent to ensure separation from concrete without damage.

3.4 STEEL REINFORCEMENT

A. General: Comply with CRSI's "Manual of Standard Practice" for fabricating, placing, and supporting reinforcement.

B. Clean reinforcement of loose rust and mill scale, earth, ice, or other bond-reducing materials.

C. Arrange, space, and securely tie bars and bar supports to hold reinforcement in position during concrete placement. Maintain minimum cover to reinforcement.

D. Install welded wire reinforcement in lengths as long as practicable. Lap adjoining pieces at least one full mesh, and lace splices with wire. Offset laps of adjoining widths to prevent continuous laps in either direction.

E. Install fabricated bar mats in lengths as long as practicable. Handle units to keep them flat and free of distortions. Straighten bends, kinks, and other irregularities, or replace units as required before placement. Set mats for a minimum 2-inch overlap of adjacent mats.

3.5 JOINTS

A. General: Form construction, isolation, and contraction joints and tool edgings true to line with faces perpendicular to surface plane of concrete. Construct transverse joints at right angles to centerline, unless otherwise indicated.

1. When joining existing pavement, place transverse joints to align with previously placed joints, unless otherwise indicated.

B. Construction Joints: Set construction joints at side and end terminations of pavement and at locations where pavement operations are stopped for more than one-half hour unless pavement terminates at isolation joints.

1. Continue steel reinforcement across construction joints, unless otherwise indicated. Do not continue reinforcement through sides of pavement strips, unless otherwise indicated.
2. Provide tie bars at sides of pavement strips where indicated.
3. Butt Joints: Use bonding agent at joint locations where fresh concrete is placed against hardened or partially hardened concrete surfaces.
4. Doweled Joints: Install dowel bars and support assemblies at joints where indicated. Lubricate or asphalt-coat one-half of dowel length to prevent concrete bonding to one side of joint.

C. Isolation Joints: Form isolation joints of preformed joint-filler strips abutting concrete curbs, catch basins, manholes, inlets, structures, walks, other fixed objects, and where indicated.

1. Locate expansion joints at intervals of 20 feet, unless otherwise indicated.
2. Extend joint fillers full width and depth of joint.
3. All Isolation Joints shall be treated with joint filler.
4. Terminate joint filler not less than 1/2 inch or more than 1 inch below finished surface.
5. Furnish joint fillers in one-piece lengths. Where more than one length is required, lace or clip joint-filler sections together.
6. Protect top edge of joint filler during concrete placement with metal, plastic, or other temporary preformed cap. Remove protective cap after concrete has been placed on both sides of joint.

D. Contraction Joints: Form weakened-plane contraction joints, sectioning concrete into areas as indicated. For larger walkways, width greater than 12' and plazas, submit shop drawing of joint pattern. Construct contraction joints for a depth equal to at least one-fourth of the concrete thickness, as follows:

1. Grooved Joints: Form contraction joints after initial floating by grooving and finishing each edge of joint with grooving tool to a 3/8-inch radius. Repeat grooving of contraction joints after applying surface finishes. Eliminate groover marks on concrete surfaces.
2. Doweled Contraction Joints: Install dowel bars and support assemblies at joints where indicated. Lubricate or asphalt coat one-half of dowel length to prevent concrete bonding to one side of joint.

E. Edging: Tool edges of pavement, gutters, curbs, and joints in concrete after initial floating with an edging tool to a 3/8-inch radius. Repeat tooling of edges after applying surface finishes. Eliminate tool marks on concrete surfaces.

3.6 CONCRETE PLACEMENT

A. Inspection: Before placing concrete, inspect and complete formwork installation, steel reinforcement, and items to be embedded or cast in. Notify other trades to permit installation of their work.

B. Remove snow, ice, or frost from subbase surface and reinforcement before placing concrete. Do not place concrete on frozen surfaces.

C. Moisten subbase to provide a uniform dampened condition at time concrete is placed. Do not place concrete around manholes or other structures until they are at required finish elevation and alignment.

D. Comply with ACI 301 requirements for measuring, mixing, transporting, and placing concrete.

E. Do not add water to fresh concrete after testing.

F. Deposit and spread concrete in a continuous operation between transverse joints. Do not push or drag concrete into place or use vibrators to move concrete into place.

G. Consolidate concrete according to ACI 301 by mechanical vibrating equipment supplemented by hand spading, rodding, or tamping.

1. Consolidate concrete along face of forms and adjacent to transverse joints with an internal vibrator. Keep vibrator away from joint assemblies, reinforcement, or side forms. Use only square-faced shovels for hand spreading and consolidation. Consolidate with care to prevent dislocating reinforcement, dowels, and joint devices.

H. Screed pavement surfaces with a straightedge and strike off.

I. Commence initial floating using bull floats or darbies to impart an open textured and uniform surface plane before excess moisture or bleed water appears on the surface. Do not further disturb concrete surfaces before beginning finishing operations or spreading surface treatments.

J. Curbs and Gutters: When automatic machine placement is used for curb and gutter placement, submit revised mix design and laboratory test results that meet or exceed requirements. Produce curbs and gutters to required cross section, lines, grades, finish, and jointing as specified for formed concrete. If results are not approved, remove and replace with formed concrete.

K. Slip-Form Pavers: When automatic machine placement is used for pavement, submit revised mix design and laboratory test results that meet or exceed requirements. Produce pavement to required thickness, lines, grades, finish, and jointing as required for formed pavement.

1. Compact subbase and prepare subgrade of sufficient width to prevent displacement of paver machine during operations.

L. When adjoining pavement lanes are placed in separate pours, do not operate equipment on concrete until pavement has attained 85 percent of its 28-day compressive strength.

M. Cold-Weather Placement: Comply with ACI 306.1 and as follows. Protect concrete work from physical damage or reduced strength that could be caused by frost, freezing actions, or low temperatures.

1. When air temperature has fallen to or is expected to fall below 40 deg F, uniformly heat water and aggregates before mixing to obtain a concrete mixture temperature of not less than 50 deg F and not more than 80 deg F at point of placement.
2. Do not use frozen materials or materials containing ice or snow.
3. Do not use calcium chloride, salt, or other materials containing antifreeze agents or chemical accelerators unless otherwise specified and approved in mix designs.

N. Hot-Weather Placement: Comply with ACI 301 and as follows when hot-weather conditions exist:

1. Cool ingredients before mixing to maintain concrete temperature below 90 deg F at time of placement. Chilled mixing water or chopped ice may be used to control temperature, provided water equivalent of ice is calculated to total amount of mixing water. Using liquid nitrogen to cool concrete is Contractor's option.
2. Cover steel reinforcement with water-soaked burlap so steel temperature will not exceed ambient air temperature immediately before embedding in concrete.
3. Fog-spray forms, steel reinforcement, and subgrade just before placing concrete. Keep subgrade moisture uniform without standing water, soft spots, or dry areas.

3.7 FLOAT FINISHING

A. Float Finish: Begin the second floating operation when bleed-water sheen has disappeared and concrete surface has stiffened sufficiently to permit operations. Float surface with power-driven floats, or by hand floating if area is small or inaccessible to power units. Finish surfaces to true planes. Cut down high spots and fill low spots. Refloat surface immediately to uniform granular texture.

1. Construct test sections of each type of concrete paving, including at least one expansion joint and control joints, for review by CM, Owner and Architect for agreement of finish prior to starting concrete installation. Review will include texture of broom finish, joint striking, picture framing and geometric conformity.

2. Medium-to-Fine-Textured Broom Finish: Draw a soft bristle broom across float-finished concrete surface perpendicular to line of traffic to provide a uniform, fine-line texture.

3. Incorporate “picture framing” of concrete in finish within lump sum prices bid.

3.8 CONCRETE PROTECTION AND CURING

A. General: Protect freshly placed concrete from premature drying and excessive cold or hot temperatures.

B. Comply with ACI 306.1 for cold-weather protection.

C. Evaporation Retarder: Apply evaporation retarder to concrete surfaces if hot, dry, or windy conditions cause moisture loss approaching 0.2 lb/sq. ft. x h before and during finishing operations. Apply according to manufacturer's written instructions after placing, screeding, and bull floating or darbying concrete, but before float finishing.

D. Begin curing after finishing concrete but not before free water has disappeared from concrete surface.

E. Curing Methods: Cure concrete by moisture curing, moisture-retaining-cover curing, curing compound, or a combination of these as follows:

1. Moisture-Retaining-Cover Curing: Cover concrete surfaces with moisture-retaining cover for curing concrete, placed in widest practicable width, with sides and ends lapped at least 12 inches, and sealed by waterproof tape or adhesive. Immediately repair any holes or tears during curing period using cover material and waterproof tape.
2. Curing Compound: Apply uniformly in continuous operation by power spray or roller according to manufacturer's written instructions. Recoat areas subjected to heavy rainfall within three hours after initial application. Maintain continuity of coating and repair damage during curing period.

3.9 PAVEMENT TOLERANCES

A. Comply with tolerances of ACI 117 and as follows:

1. Elevation: 1/4 inch.
2. Thickness: Plus 3/8 inch, minus 1/4 inch.
3. Surface: Gap below 10-foot- long, unleveled straightedge not to exceed 1/4 inch.
4. Lateral Alignment and Spacing of Tie Bars and Dowels: 1 inch.
5. Vertical Alignment of Tie Bars and Dowels: 1/4 inch.
6. Alignment of Tie-Bar End Relative to Line Perpendicular to Pavement Edge: 1/2 inch.
7. Alignment of Dowel-Bar End Relative to Line Perpendicular to Pavement Edge: Length of dowel 1/4 inch per 12 inches.
8. Joint Spacing: 3 inches.
9. Contraction Joint Depth: Plus 1/4 inch, no minus.
10. Joint Width: Plus 1/8 inch, no minus.

3.10 WHEEL STOPS

A. Securely attach wheel stops into pavement with not less than two galvanized steel dowels embedded in holes drilled or cast into wheel stops at one-quarter to one-third points. Firmly bond each dowel to wheel stop and to pavement. Securely install dowels into pavement and bond to wheel stop. Recess head of dowel beneath top of wheel stop.

3.11 FIELD QUALITY CONTROL

A. Testing Agency: Owner shall engage a qualified independent testing and inspecting agency to perform field tests and inspections and prepare test reports.

B. Testing Services: Testing of composite samples of fresh concrete obtained according to ASTM C 172 shall be performed according to the following requirements:

1. Testing Frequency: Obtain at least 1 composite sample for each 100 cu. yd. or fraction thereof of each concrete mix placed each day.

   a. When frequency of testing will provide fewer than five compressive-strength tests for each concrete mixture, testing shall be conducted from at least five randomly selected batches or from each batch if fewer than five are used.

2. Slump: ASTM C 143/C 143M; one test at point of placement for each composite sample, but not less than one test for each day's pour of each concrete mix. Perform additional tests when concrete consistency appears to change.
3. Air Content: ASTM C 231, pressure method; one test for each composite sample, but not less than one test for each day's pour of each concrete mix.

4. Concrete Temperature: ASTM C 1064; one test hourly when air temperature is 40 deg F and below and when 80 deg F and above, and one test for each composite sample.
5. Compression Test Specimens: ASTM C 31/C 31M; cast and laboratory cure one set of three standard cylinder specimens for each composite sample.
6. Compressive-Strength Tests: ASTM C 39/C 39M; test 1 specimen at 7 days and 2 specimens at 28 days.

    a. A compressive-strength test shall be the average compressive strength from 2 specimens obtained from same composite sample and tested at 28 days.

C. Strength of each concrete mix will be satisfactory if average of any 3 consecutive compressive-strength tests equals or exceeds specified compressive strength and no compressive-strength test value falls below specified compressive strength by more than 500 psi.

D. Test results shall be reported in writing to Architect, concrete manufacturer, and Contractor within 48 hours of testing. Reports of compressive-strength tests shall contain Project identification name and number, date of concrete placement, name of concrete testing and inspecting agency, location of concrete batch in Work, design compressive strength at 28 days, concrete mixture proportions and materials, compressive breaking strength, and type of break for both 7- and 28-day tests.

E. Nondestructive Testing: Impact hammer, sonoscope, or other nondestructive device may be permitted by Architect but will not be used as sole basis for approval or rejection of concrete.

F. Additional Tests: Testing and inspecting agency shall make additional tests of concrete when test results indicate that slump, air entrainment, compressive strengths, or other requirements have not been met, as directed by Architect.

G. Remove and replace concrete pavement where test results indicate that it does not comply with specified requirements.

H. Additional testing and inspecting, at Contractor's expense, will be performed to determine compliance of replaced or additional work with specified requirements.

3.12 REPAIRS AND PROTECTION

A. Remove and replace concrete pavement that is broken, damaged, or defective or that does not comply with requirements in this Section.

B. Drill test cores, where directed by Architect, when necessary to determine magnitude of cracks or defective areas. Fill drilled core holes in satisfactory pavement areas with portland cement concrete bonded to pavement with epoxy adhesive.

C. Protect concrete from damage. Exclude traffic from pavement for at least 14 days after placement. When construction traffic is permitted, maintain pavement as clean as possible by removing surface stains and spillage of materials as they occur.

D. Maintain concrete pavement free of stains, discoloration, dirt, and other foreign material. Sweep concrete pavement not more than two days before date scheduled for Substantial Completion inspections.

END OF SECTION 321313

SECTION 323116 - WELDED WIRE FENCES AND GATES

PART 1 - GENERAL

1.1 RELATED DOCUMENTS

A. Drawings and general provisions of the Contract, including General and Supplementary Conditions and Division 01 Specification Sections, apply to this Section.

1.2 SUMMARY

A. Section Includes:

1. Steel welded-wire fences.
2. Steel welded wire gate.

B. Related Requirements:

1. Section 033000 "Cast-in-Place Concrete for base material.
2. Section 281300 "Access Control" for access control devices installed at gates and provided as part of a security system.
3. Section 312000 "Earth Moving" for site excavation, fill, and backfill where welded-wire fences and gates are located.

1.3 PREINSTALLATION MEETINGS

A. Preinstallation Conference: Conduct conference at Project Site.

1.4 ACTION SUBMITTALS

A. Product Data: Manufacturer’s descriptive data for each type of product.

B. Shop Drawings: For fence and gates. Include plans, elevations, sections, details, and attachments to other work.

1. Include diagrams for power, signal, and control wiring.

C. Samples: For each fence material and for each color specified.
1. Provide Samples 12 inches (300 mm) square for wire mesh.

1.5 CLOSEOUT SUBMITTALS

A. Maintenance Data: For gate operators to include in maintenance manuals.

1.6 QUALITY ASSURANCE

A. Installer Qualifications: Minimum 2 years documented experience in work of tis section.

B. Mockups: Build mockups to verify selections made under Sample submittals, to demonstrate aesthetic effects, and to set quality standards for fabrication and installation.

1. Include 10-foot (3-m) length of fence complying with requirements.
2. Subject to compliance with requirements, approved mockups may become part of the completed Work if undisturbed at time of Substantial Completion.

1.7 WARRANTIES

A. Furnish manufacturer's 10 year warranty providing coverage against corrosion of galvanized steel coatings and blistering or loosening of powder coatings.

PART 2 - PRODUCTS

2.1 PERFORMANCE REQUIREMENTS

A. Lightning-Protection System: Maximum grounding-resistance value of 25 ohms under normal dry conditions.

2.2 METALLIC-COATED-STEEL, WELDED-WIRE FENCES

A. Metallic-Coated-Steel, Welded-Wire Fences:
1. Basis-of-Design Product: Subject to compliance with requirements, provide Designmaster fence panels as manufactured by Deacero or comparable product by one of the following only:
   a. Ametco Manufacturing Corporation.
   b. BarnettBates Corporation.
   c. BetaFence USA LLC.
   d. Deacero S.A. DE C.V.
   e. Hill & Smith Inc.
   f. Jerith Manufacturing Company, Inc.
   g. Master Halco.
   h. Metalco Fence & Railing Systems; Atlantis Products, Inc.
   i. Omega II Fence Systems; a division of Metaltech - Omega Inc.

B. Fence Fabric: Metallic-coated-steel wire.

1. Spacing of Vertical Wires: 2 inches (51 mm).
2. Spacing of Horizontal Wires: 6 inches (153 mm).
3. Horizontal & Vertical Wire Size: 6 Gauge [0.2031 inch (5.16 mm)].
4. Resistance welded steel wire mesh, ASTM A185/A815M, 6 Gauge, Class 1 galvanized steel wire per ASTM A641/A641M.

C. Posts:

1. Posts: Square tubes 2 by 2 inches (50 by 50 mm) nominal-thickness steel sheet and hot-dip galvanized after fabrication.
2. Length: To suit panel height and post mounting.
3. Bases: Steel plate welded to bottom of posts, with four plated steel anchor bolts per base.

D. Post Caps: UV-resistant plastic sized to post dimensions, friction fit.

E. Fasteners: Manufacturer's standard tamperproof, corrosion-resistant, color-coated fasteners matching fence components with resilient polymer washers or clips.

F. Finish: Polyester powder coated to approximately 4 mils thickness.
1. Color: Black
2. Salt Spray Resistance: no rusting or blistering tested to ASTM B117 for 1000 hours.
3. Adhesion: tested to ASTM D3359, Method B

2.3 SWING GATES

A. Gate Configuration: As indicated on drawings.

B. Gate Frame Height: As indicated on drawings.

C. Gate Opening Width: As indicated on drawings

D. Galvanized-Steel Frames and Bracing: Fabricate members from square tubes 2 by 2 inches (50 by 50 mm) formed from 0.108-inch (2.74-mm) nominal-thickness, metallic-coated steel sheet or formed from 0.105-inch (2.66-mm) nominal-thickness steel sheet and hot-dip galvanized after fabrication.

E. Frame Corner Construction: Welded.

F. Additional Rails: Provide as indicated, complying with requirements for fence rails.

G. Infill: Welded-wire fence fabric matching adjacent fence.

H. Hinges: BHMA A156.1, Grade 1, suitable for exterior use.

1. Function: 39 - Full surface, triple weight, antifriction bearing.
2. Material: Wrought steel, forged steel, cast steel, or malleable iron; galvanized.

I. Exit Hardware: BHMA A156.3, Grade 1, Type 1 (rim exit device), with push pad actuating bar, suitable for exterior use.

1. Function: 08 - Entrance by lever. Key locks or unlocks lever.
2. Mounting Channel: Bent-plate channel formed from 1/8-inch- (3.2-mm-) thick, steel plate; hot-dip galvanized after fabrication. Channel spans gate frame. Exit device is mounted on channel web, recessed between flanges, with flanges extending 1/8 inch (3.2 mm) beyond push pad surface.

J. Cane Bolts: Provide for inactive leaf of pairs of gates. Fabricated from 3/4-inch- (19-mm-) diameter, round steel bars, hot-dip galvanized after fabrication. Finish to match gates. Provide galvanized-steel pipe strikes to receive cane bolts in closed position.

K. Metallic-Coated-Steel Finish: High-performance coating.

2.4 FENCE AND GATE MATERIALS

A. Metallic-Coated-Steel Wire: Welded-wire fence fabric, hot-dip galvanized after fabrication. Weight of zinc coating shall be not less than 1.0 oz./sq. ft. (305 g/sq. m).

B. Plates, Shapes, and Bars: ASTM A 36/A 36M.

C. Tubing: ASTM A 500/A 500M, cold-formed steel tubing.

D. Uncoated Steel Sheet: Hot-rolled steel sheet, ASTM A 1011/A 1011M, Structural Steel, Grade 45 (Grade 310) or cold-rolled steel sheet, ASTM A 1008/A 1008M, Structural Steel, Grade 50 (Grade 340).

1. Interior surface of tubes formed from uncoated steel sheet shall be hot-dip zinc coated same as exterior.

E. Metallic-Coated Steel Sheet: Galvanized-steel sheet or aluminum-zinc, alloy-coated steel sheet.

F. Galvanized-Steel Sheet: ASTM A 653/A 653M, structural quality, Grade 50 (Grade 340), with **G90 (Z275)** coating.

G. Galvanizing: For components indicated to be galvanized and for which galvanized coating is unspecified, hot-dip galvanize to comply with ASTM A 123/A 123M. For hardware items, hot-dip galvanize to comply with ASTM A 153/A 153M.

2.5 MISCELLANEOUS MATERIALS

A. Concrete: Normal-weight, air-entrained, ready-mix concrete complying with requirements in Section 033000 "Cast-in-Place Concrete" with a minimum 28-day compressive strength of 3000 psi (20 MPa), 3-inch (75-mm) slump, and 1-inch (25-mm) maximum aggregate size.

B. Nonshrink Grout: Factory-packaged, nonstaining, noncorrosive, nongaseous grout complying with ASTM C 1107/C 1107M and specifically recommended by manufacturer for exterior applications.

2.6 GROUNDING MATERIALS

A. Grounding Conductors: Bare, solid wire for No. 6 AWG and smaller; stranded wire for No. 4 AWG and larger.

1. Material above Finished Grade: Copper.
2. Material on or below Finished Grade: Copper.
3. Bonding Jumpers: Braided copper tape, 1 inch (25 mm) wide, woven of No. 30 AWG bare copper wire, terminated with copper ferrules.

B. Grounding Connectors and Grounding Rods: Comply with UL 467.

1. Connectors for Below-Grade Use: Exothermic-welded type.
2. Grounding Rods: Copper-clad steel.

a. Size: 5/8 by 96 inches (16 by 2440 mm).

2.7 METALLIC-COATED-STEEL FINISHES

A. Galvanized Finish: Clean welds, mechanical connections, and abraded areas, and repair galvanizing to comply with ASTM A 780/A 780M.

B. Surface Preparation: Clean surfaces with nonpetroleum solvent so surfaces are free of oil and other contaminants. After cleaning, apply a zinc-phosphate conversion coating suited to the organic coating to be applied over it. Clean welds, mechanical connections, and abraded areas, and repair galvanizing to comply with ASTM A 780/A 780M.

C. High-Performance Coating: Apply epoxy primer, polyurethane intermediate coat, and polyurethane topcoat to prepared surfaces. Comply with coating manufacturer's written instructions and with requirements in SSPC-PA 1, "Paint Application Specification No. 1: Shop, Field, and Maintenance Painting of Steel," for shop painting. Apply at spreading rates recommended by coating manufacturer.

1. Match approved Samples for color, texture, and coverage. Remove and refinish, or recoat work that does not comply with specified requirements.

PART 3 - EXECUTION

3.1 EXAMINATION

A. Examine areas and conditions, with Installer present, for compliance with requirements for site clearing, earthwork, pavement work, construction layout, and other conditions affecting performance of the Work.

B. Do not begin installation before final grading is completed unless otherwise permitted by Architect.

C. Proceed with installation only after unsatisfactory conditions have been corrected.

3.2 PREPARATION

A. Stake locations of fence lines, gates, and terminal posts. Do not exceed intervals of 500 feet (152.5 m) or line of sight between stakes. Indicate locations of utilities, lawn sprinkler system, underground structures, benchmarks, and property monuments.

1. Construction layout and field engineering are specified in Section 017300 "Execution."

3.3 FENCE INSTALLATION

A. Install fences according to manufacturer's written instructions.

B. Install fences by setting posts as indicated and fastening rails and infill panels to posts.

C. Post Excavation: Drill or hand-excavate holes for posts in firm, undisturbed soil. Excavate holes to a diameter of not less than 4 times post size and a depth of not less than 24 inches (600 mm) plus 3 inches (75 mm) for each foot (300 mm) or fraction of a foot (300 mm) that fence height exceeds 4 feet (1.2 m).

D. Post Setting: Set posts in concrete at indicated spacing into firm, undisturbed soil.

1. Verify that posts are set plumb, aligned, and at correct height and spacing, and hold in position during setting with concrete or mechanical devices.
2. Concrete Fill: Place concrete around posts and vibrate or tamp for consolidation. Protect aboveground portion of posts from concrete splatter.

   a. Concealed Concrete: Top 2 inches (50 mm) below gradeto allow covering with surface material. Slope top surface of concrete to drain water away from post.

3. Posts Set in Concrete: Extend post to within 6 inches (150 mm) of specified excavation depth, but not closer than 3 inches (75 mm) to bottom of concrete.
4. Space posts uniformly at 8 feet (2.44 m) o.c.

3.4 GATE INSTALLATION

A. Install gates according to manufacturer's written instructions, level, plumb, and secure for full opening without interference. Attach hardware using tamper-resistant or concealed means. Install ground-set items in concrete for anchorage. Adjust hardware for smooth operation and lubricate where necessary.

3.5 GROUNDING AND BONDING

A. Fence Grounding: Install at maximum intervals of 1500 feet (450 m) except as follows:

1. Fences within 100 Feet (30 m) of Buildings, Structures, Walkways, and Roadways: Ground at maximum intervals of 750 feet (225 m).

a. Gates and Other Fence Openings: Ground fence on each side of opening.

1) Bond metal gates to gate posts.

B. Grounding Method: At each grounding location, drive a grounding rod vertically until the top is 6 inches (150 mm) below finished grade. Connect rod to fence with No. 6 AWG conductor. Connect conductor to each fence component at grounding location.

C. Bonding Method for Gates: Connect bonding jumper between gate post and gate frame.

D. Connections: Make connections so possibility of galvanic action or electrolysis is minimized. Select connectors, connection hardware, conductors, and connection methods so metals in direct contact are galvanically compatible.

1. Use electroplated or hot-tin-coated materials to ensure high conductivity and to make contact points closer in order of galvanic series.
2. Make connections with clean, bare metal at points of contact.
3. Make aluminum-to-steel connections with stainless-steel separators and mechanical clamps.
4. Make aluminum-to-galvanized-steel connections with tin-plated copper jumpers and mechanical clamps.
5. Coat and seal connections having dissimilar metals with inert material to prevent future penetration of moisture to contact surfaces.

E. Bonding to Lightning-Protection System: If fence terminates at lightning-protected building or structure, ground the fence and bond the fence grounding conductor to lightning-protection down conductor or lightning-protection grounding conductor, complying with NFPA 780.

F. Gates: Adjust gates to operate smoothly, easily, and quietly, free of binding, warp, excessive deflection, distortion, nonalignment, misplacement, disruption, or malfunction, throughout entire operational range. Confirm that latches and locks engage accurately and securely without forcing or binding.

G. Lubricate hardware and other moving parts.

END OF SECTION 323116

SECTION 329200 - TURF AND GRASSES

PART 1 - GENERAL

1.1 RELATED DOCUMENTS

A. Drawings and general provisions of the Contract, including General and Supplementary Conditions and Division 01 Specification Sections, apply to this Section. Execute the work of this Specification in accordance with applicable portions of;
   1. Division 1 – General Requirements

1.2 SUMMARY

A. Section Includes:

   1. Seeding.
   2. Hydroseeding.
   3. Sodding.
   4. Plugging.
   5. Sprigging.
   6. Meadow grasses and wildflowers.
   7. Turf renovation.
   8. Erosion-control material(s).
   9. Grass paving.

B. Related Sections:

   1. Division 31 Section "Site Clearing" for topsoil stripping and stockpiling.
   2. Division 31 Section "Earth Moving" for excavation, filling and backfilling, and rough grading.
   3. Division 32 Section "Planting Irrigation " for turf irrigation.
   4. Division 32 Section "Plants" for border edgings.
   5. Division 33 Section "Subdrainage" for subsurface drainage.

1.3 DEFINITIONS

A. Duff Layer: The surface layer of native topsoil that is composed of mostly decayed leaves, twigs, and detritus.

B. Finish Grade: Elevation of finished surface of planting soil.

C. Manufactured Topsoil: Soil produced off-site by homogeneously blending mineral soils or sand with stabilized organic soil amendments to produce topsoil or planting soil.

D. Pesticide: A substance or mixture intended for preventing, destroying, repelling, or mitigating a pest. This includes insecticides, miticides, herbicides, fungicides, rodenticides, and molluscicides. It also includes substances or mixtures intended for use as a plant regulator, defoliant, or desiccant.

E. Pests: Living organisms that occur where they are not desired or that cause damage to plants, animals, or people. These include insects, mites, grubs, mollusks (snails and slugs), rodents (gophers, moles, and mice), unwanted plants (weeds), fungi, bacteria, and viruses.

F. Planting Soil: Standardized topsoil; existing, native surface topsoil; existing, in-place surface soil; imported topsoil; or manufactured topsoil that is modified with soil amendments and perhaps fertilizers to produce a soil mixture best for plant growth.

G. Subgrade: Surface or elevation of subsoil remaining after excavation is complete, or top surface of a fill or backfill before planting soil is placed.

H. Subsoil: All soil beneath the topsoil layer of the soil profile, and typified by the lack of organic matter and soil organisms.

I. Surface Soil: Soil that is present at the top layer of the existing soil profile at the Project site. In undisturbed areas, the surface soil is typically topsoil, but in disturbed areas such as urban environments, the surface soil can be subsoil.

1.4 ACTION SUBMITTALS

A. Product Data: For each type of product indicated.

1. Pesticides and Herbicides: Include product label and manufacturer's application instructions specific to this Project.

1.5 INFORMATIONAL SUBMITTALS

A. Certification of Grass Seed: From seed vendor for each grass-seed monostand or mixture stating the botanical and common name, percentage by weight of each species and variety, and percentage of purity, germination, and weed seed. Include the year of production and date of packaging.

1. Certification of each seed mixture for turfgrass. Include identification of source and name and telephone number of supplier.

B. Qualification Data: For qualified landscape Installer.

C. Product Certificates: For soil amendments and fertilizers, from manufacturer.

D. Material Test Reports: For existing in-place surface soil and imported topsoil.

E. Maintenance Instructions: Recommended procedures to be established by Owner for maintenance of turf during a calendar year. Submit before expiration of required initial maintenance periods.

1.6 QUALITY ASSURANCE

A. Installer Qualifications: A qualified landscape Installer whose work has resulted in successful turf establishment.

1. Professional Membership: Installer shall be a member in good standing of either the Professional Landcare Network or the American Nursery and Landscape Association.
2. Experience: Three years' experience in turf installation in addition to requirements in Division 01 Section "Quality Requirements."
3. Installer's Field Supervision: Require Installer to maintain an experienced full-time supervisor on Project site when work is in progress.
4. Personnel Certifications: Installer's field supervisor shall have certification in one of the following categories from the Professional Landcare Network:

a. Certified Landscape Technician - Exterior, with specialty area(s), designated CLT-Exterior.
b. Certified Turfgrass Professional, designated CTP.
c. Certified Turfgrass Professional of Cool Season Lawns, designated CTP-CSL.

5. Maintenance Proximity: Not more than two hours' normal travel time from Installer's place of business to Project site.
6. Pesticide Applicator: State licensed, commercial.

B. Soil-Testing Laboratory Qualifications: An independent laboratory or university laboratory, recognized by the State Department of Agriculture, with the experience and capability to conduct the testing indicated and that specializes in types of tests to be performed.

C. Soil Analysis: For each unamended soil type, furnish soil analysis and a written report by a qualified soil-testing laboratory stating percentages of organic matter; gradation of sand, silt, and clay content; cation exchange capacity; deleterious material; pH; and mineral and plant-nutrient content of the soil.

1. Testing methods and written recommendations shall comply with USDA's Handbook No. 60.
2. The soil-testing laboratory shall oversee soil sampling, with depth, location, and number of samples to be taken per instructions from Architect. A minimum of three representative samples shall be taken from varied locations for each soil to be used or amended for planting purposes.
3. Report suitability of tested soil for turf growth.

a. Based on the test results, state recommendations for soil treatments and soil amendments to be incorporated. State recommendations in weight per 1000 sq. ft. or volume per cu. yd. for nitrogen, phosphorus, and potash nutrients and soil amendments to be added to produce satisfactory planting soil suitable for healthy, viable plants.
b. Report presence of problem salts, minerals, or heavy metals, including aluminum, arsenic, barium, cadmium, chromium, cobalt, lead, lithium, and vanadium. If such problem materials are present, provide additional recommendations for corrective action.

D. Pre-installation Conference: To Be Announced

1.7 DELIVERY, STORAGE, AND HANDLING

A. Seed and Other Packaged Materials: Deliver packaged materials in original, unopened containers showing weight, certified analysis, name and address of manufacturer, and indication of conformance with state and federal laws, as applicable.

B. Sod: (NOT USED).

C. Bulk Materials:

1. Do not dump or store bulk materials near structures, utilities, walkways and pavements, or on existing turf areas or plants.
2. Provide erosion-control measures to prevent erosion or displacement of bulk materials, discharge of soil-bearing water runoff, and airborne dust reaching adjacent properties, water conveyance systems, or walkways.
3. Accompany each delivery of bulk fertilizers and soil amendments with appropriate certificates.

1.8 PROJECT CONDITIONS

A. Planting Restrictions: Plant during one of the following periods. Coordinate planting periods with initial maintenance periods to provide required maintenance.

1. Spring Planting: March 15 – June 15
2. Fall Planting: September 15 – November 15

B. Weather Limitations: Proceed with planting only when existing and forecasted weather conditions permit planting to be performed when beneficial and optimum results may be obtained. Apply products during favorable weather conditions according to manufacturer's written instructions.

1.9 MAINTENANCE SERVICE

A. Initial Turf Maintenance Service: Provide full maintenance by skilled employees of landscape Installer. Maintain as required in Part 3. Begin maintenance immediately after each area is planted and continue until acceptable turf is established but for not less than the following periods:

1. Seeded Turf: 90 days from date of installation.

a. When initial maintenance period has not elapsed before end of planting season, or if turf is not fully established, continue maintenance during next planting season.

2. Sodded Turf: (NOT USED)
3. Plugged Turf: (NOT USED).
4. Sprigged Turf: (NOT USED)

B. Initial Meadow Maintenance Service: Provide full maintenance by skilled employees of landscape Installer. Maintain as required in Part 3. Begin maintenance immediately after each area is planted and continue until acceptable meadow is established, but for not less than 90 days from date of installation.

C. Continuing Maintenance Proposal: From Installer to Owner, in the form of a standard yearly (or other period) maintenance agreement, starting on date initial maintenance service is concluded. State services, obligations, conditions, and terms for agreement period and for future renewal options.

PART 2 - PRODUCTS

2.1 SEED

A. Grass Seed: Fresh, clean, dry, new-crop seed complying with AOSA's "Journal of Seed Technology; Rules for Testing Seeds" for purity and germination tolerances.

B. Seed Species: State-certified seed of grass species as follows: (As noted on Plans L-103 for Parking Area Bio-retention and L-104 for Wetland Construction)

C. Seed Species: (For Fine Lawn Areas) Seed of grass species as follows, with not less than 95 percent germination, not less than 85 percent pure seed, and not more than 0.5 percent weed seed:

1. Full Sun: Bermudagrass (Cynodon dactylon).
2. Full Sun: Kentucky bluegrass (Poa pratensis), a minimum of three cultivars.
3. Sun and Partial Shade: Proportioned by weight as follows:

a. 50 percent Kentucky bluegrass (Poa pratensis).
b. 30 percent chewings red fescue (Festuca rubra variety).
c. 10 percent perennial ryegrass (Lolium perenne).
d. 10 percent redtop (Agrostis alba).

4. Shade: Proportioned by weight as follows:

   a. 50 percent chewings red fescue (Festuca rubra variety).
   b. 35 percent rough bluegrass (Poa trivialis).
   c. 15 percent redtop (Agrostis alba).

D. Grass Seed Mix: Proprietary seed mix as follows:

1. Products: Subject to compliance with requirements, As Specified by Ernst Conservation Seeds.

2.2 TURFGRASS SOD

A. Turfgrass Sod: (NOT USED)

B. Turfgrass Species: (NOT USED).

C. Turfgrass Species: (NOT USED)

2.3 PLUGS (NOT USED)

2.4 SPRIGS (NOT USED)

2.5 MEADOW GRASSES AND WILDFLOWERS (NOT USED)

2.6 INORGANIC SOIL AMENDMENTS

A. Lime: ASTM C 602, agricultural liming material containing a minimum of 85 percent calcium carbonate , ground so that not less 90% passes a 10 mesh sieve and not less than 30% passes a 100 mesh sieve. Apply at the rate adequate to bring pH range up to 6.0 to 6.5.

B. Sulfur: Granular, biodegradable, containing a minimum of 90 percent sulfur, and with a minimum of 99 percent passing through No. 6 sieve and a maximum of 10 percent passing through No. 40 sieve.

C. Iron Sulfate: Granulated ferrous sulfate containing a minimum of 20 percent iron and 10 percent sulfur.

D. Aluminum Sulfate: Commercial grade, unadulterated.

E. Perlite: Horticultural perlite, soil amendment grade.

F. Agricultural Gypsum: Minimum 90 percent calcium sulfate, finely ground with 90 percent passing through No. 50 sieve.

G. Sand: Clean, washed, natural or manufactured, and free of toxic materials.

H. Diatomaceous Earth: Calcined, 90 percent silica, with approximately 140 percent water absorption capacity by weight.

I. Zeolites: Mineral clinoptilolite with at least 60 percent water absorption by weight.

2.7 ORGANIC SOIL AMENDMENTS

A. Compost: Well-composted, stable, and weed-free organic matter, pH range of 5.5 to 8; moisture content 35 to 55 percent by weight; 100 percent passing through ½ inch sieve; soluble salt content of 4 to 8 decisiemens/m; not exceeding 0.5 percent inert contaminants and free of substances toxic to plantings; and as follows:

1. Organic Matter Content: 50 to 60 percent of dry weight.
2. Feedstock: (NOT USED).

B. Sphagnum Peat: Partially decomposed sphagnum peat moss, finely divided or of granular texture, with a pH range of 3.4 to 4.8.

C. Muck Peat: Partially decomposed moss peat, native peat, or reed-sedge peat, finely divided or of granular texture, with a pH range of 6 to 7.5, and having a water-absorbing capacity of 1100 to 2000 percent.

D. Wood Derivatives: (Not Used).

E. Manure: (Not Used).

2.8 FERTILIZERS

A. Bonemeal: Commercial, raw or steamed, finely ground; a minimum of 4 percent nitrogen and 20 percent phosphoric acid.

B. Superphosphate: Commercial, phosphate mixture, soluble; a minimum of 20 percent available phosphoric acid.

C. Commercial Fertilizer: Commercial-grade complete fertilizer of neutral character, consisting of fast- and slow-release nitrogen, 50 percent derived from natural organic sources of urea formaldehyde, phosphorous, and potassium.

D. Slow-Release Fertilizer: Granular or pelleted fertilizer consisting of 50 percent water-insoluble nitrogen, phosphorus, and potassium in the following composition:

1. Composition: 20 percent nitrogen, 10 percent phosphorous, and 10 percent potassium, by weight.
2. Composition: Nitrogen, phosphorous, and potassium in amounts recommended in soil reports from a qualified soil-testing laboratory.
3. For lawns, provide fertilizer with not less than 4% phosphoric acid and not less than 2% potassium and the percentage of nitrogen required to provide not less than 1 lb. of actual nitrogen per 1000 sq. ft. of lawn area. Provide nitrogen in a form that will be available to the lawn during the initial period of growth.

2.9 PLANTING SOILS

A. TOPSOIL

Topsoil shall be from off-site sources. It shall be without admixture of subsoil or slag and shall be free of stones, lumps, plants or their roots, sticks and extraneous matter, and shall not be moved, placed or used while in a frozen or muddy condition.

Topsoil from off-site sources shall have an acidity range of pH 5.0 to 7.0 and shall contain not less than 5% organic matter as determined by the "Walkley-Black Method" (Colorimetric version). Sufficient limestone shall be added to topsoil used to bring it to a range of pH 6.0 to pH 6.5.

Soil sample tests will be ordered by the Landscape Architect and shall be made by a state or commercial laboratory using methods approved by the Associates of Official Agricultural chemists or the State Agricultural Experiment Station.

Such analysis will be paid for by the Contractor. Moving and placing of topsoil may be made after approval of the analysis by the Landscape Architect.

If approved, natural topsoil not having the hydrogen-ion value specified above may be amended by the contractor, at his own expense, to bring it within the specified limits. Topsoil shall meet the following mechanical analysis:

	Passing %	Retained %
1" Screen	100%	0%
1/2" Screen	97-100%	0-3%
No. 100 Mesh Sieve	60-40%	40-60%

There shall be a minimum of 4" of topsoil (after settlement) in all plant beds, pit plantings, ground cover areas, and lawns or as called for on the drawings whichever is greater.

B. LIGHT WEIGHT ON-STRUCTURE PLANTING SOIL (NOT USED)

2.10 MULCHES

A. Straw Mulch: Provide air-dry, clean, mildew- and seed-free, salt hay or threshed straw of wheat, rye, oats, or barley.

B. Sphagnum Peat Mulch: Partially decomposed sphagnum peat moss, finely divided or of granular texture, and with a pH range of 3.4 to 4.8.

C. Muck Peat Mulch: Partially decomposed moss peat, native peat, or reed-sedge peat, finely divided or of granular texture, with a pH range of 6 to 7.5, and having a water-absorbing capacity of 1100 to 2000 percent.

D. Compost Mulch: Well-composted, stable, and weed-free organic matter, pH range of 5.5 to 8; moisture content 35 to 55 percent by weight; 100 percent passing through 1-inch sieve; soluble salt content 2-5 decisiemens/m; not exceeding 0.5 percent inert contaminants and free of substances toxic to plantings; and as follows:

1. Organic Matter Content 50-60 percent of dry weight.
2. Feedstock: (NOT USED).

E. Fiber Mulch: Biodegradable, dyed-wood, cellulose-fiber mulch; nontoxic and free of plant-growth or germination inhibitors; with a maximum moisture content of 15 percent and a pH range of 4.5 to 6.5.

F. Nonasphaltic Tackifier: Colloidal tackifier recommended by fiber-mulch manufacturer for slurry application; nontoxic and free of plant-growth or germination inhibitors.

G. Asphalt Emulsion: ASTM D 977, Grade SS-1; nontoxic and free of plant-growth or germination inhibitors.

2.11 PESTICIDES

A. General: Pesticide, registered and approved by EPA, acceptable to authorities having jurisdiction, and of type recommended by manufacturer for each specific problem and as required for Project conditions and application. Do not use restricted pesticides unless authorized in writing by authorities having jurisdiction.

B. Pre-Emergent Herbicide (Selective and Non-Selective): Effective for controlling the germination or growth of weeds within planted areas at the soil level directly below the mulch layer.

C. Post-Emergent Herbicide (Selective and Non-Selective): Effective for controlling weed growth that has already germinated.

2.12 EROSION-CONTROL MATERIALS

A. Erosion-Control Blankets: Biodegradable wood excelsior, straw, or coconut-fiber mat enclosed in a photodegradable plastic mesh. Include manufacturer's recommended steel wire staples.

B. Erosion-Control Fiber Mesh: Biodegradable burlap or spun-coir mesh, a minimum of 0.92 lb/sq. yd. with 50 to 65 percent open area. Include manufacturer's recommended steel wire staples,

C. Erosion-Control Mats: Cellular, non-biodegradable slope-stabilization mats designed to isolate and contain small areas of soil over steeply sloped surface,. Include manufacturer's recommended anchorage system for slope conditions.

2.13 GRASS-PAVING MATERIALS (NOT USED)

PART 3 - EXECUTION

3.1 EXAMINATION

A. Examine areas to be planted for compliance with requirements and other conditions affecting performance.

1. Verify that no foreign or deleterious material or liquid such as paint, paint washout, concrete slurry, concrete layers or chunks, cement, plaster, oils, gasoline, diesel fuel, paint thinner, turpentine, tar, roofing compound, or acid has been deposited in soil within a planting area.
2. Do not mix or place soils and soil amendments in frozen, wet, or muddy conditions.
3. Suspend soil spreading, grading, and tilling operations during periods of excessive soil moisture until the moisture content reaches acceptable levels to attain the required results.
4. Uniformly moisten excessively dry soil that is not workable and which is too dusty.

B. Proceed with installation only after unsatisfactory conditions have been corrected.

C. If contamination by foreign or deleterious material or liquid is present in soil within a planting area, remove the soil and contamination as directed by Architect and replace with new planting soil.

3.2 PREPARATION

A. Protect structures, utilities, sidewalks, pavements, and other facilities, trees, shrubs, and plantings from damage caused by planting operations.

1. Protect adjacent and adjoining areas from hydroseeding and hydromulching overspray.
2. Protect grade stakes set by others until directed to remove them.

B. Install erosion-control measures to prevent erosion or displacement of soils and discharge of soil-bearing water runoff or airborne dust to adjacent properties and walkways.

3.3 TURF AREA PREPARATION

A. Limit turf subgrade preparation to areas to be planted.

B. Newly Graded Subgrades: Loosen subgrade to a minimum depth of 6 inches. Remove stones larger than 1 inch in any dimension and sticks, roots, rubbish, and other extraneous matter and legally dispose of them off Owner's property.

1. Thoroughly blend planting soil off-site before spreading.

   a. Delay mixing fertilizer with planting soil if planting will not proceed within a few days.
   b. Mix lime with dry soil before mixing fertilizer.

2. Spread planting soil to a depth of 6 inches but not less than required to meet finish grades after light rolling and natural settlement. Do not spread if planting soil or subgrade is frozen, muddy, or excessively wet.

   a. Spread approximately 1/2 the thickness of planting soil over loosened subgrade. Mix thoroughly into top 4 inches of subgrade. Spread remainder of planting soil.
   b. Reduce elevation of planting soil to allow for soil thickness of sod.

C. Unchanged Subgrades: If turf is to be planted in areas unaltered or undisturbed by excavating, grading, or surface-soil stripping operations, prepare surface soil as follows:

1. Remove existing grass, vegetation, and turf. Do not mix into surface soil.
2. Loosen surface soil to a depth of at least 6 inches. Apply soil amendments and fertilizers according to planting soil mix proportions and mix thoroughly into top 4 inches of soil. Till soil to a homogeneous mixture of fine texture.

3. Remove stones larger than 1 inch in any dimension and sticks, roots, trash, and other extraneous matter.
4. Legally dispose of waste material, including grass, vegetation, and turf, off Owner's property.

D. Finish Grading: Grade planting areas to a smooth, uniform surface plane with loose, uniformly fine texture. Grade to within plus or minus 1/2 inch of finish elevation. Roll and rake, remove ridges, and fill depressions to meet finish grades. Limit finish grading to areas that can be planted in the immediate future.

E. Moisten prepared area before planting if soil is dry. Water thoroughly and allow surface to dry before planting. Do not create muddy soil.

F. Before planting, obtain Architect's acceptance of finish grading; restore planting areas if eroded or otherwise disturbed after finish grading.

3.4 PREPARATION FOR EROSION-CONTROL MATERIALS

A. Prepare area as specified in "Turf Area Preparation" Article.

B. For erosion-control mats, install planting soil in two lifts, with second lift equal to thickness of erosion-control mats. Install erosion-control mat and fasten as recommended by material manufacturer.

C. Fill cells of erosion-control mat with planting soil and compact before planting.

D. For erosion-control blanket or mesh, install from top of slope, working downward, and as recommended by material manufacturer for site conditions. Fasten as recommended by material manufacturer.

E. Moisten prepared area before planting if surface is dry. Water thoroughly and allow surface to dry before planting. Do not create muddy soil.

3.5 PREPARATION FOR GRASS-PAVING MATERIALS (NOT USED)

3.6 SEEDING

A. Sow seed with spreader or seeding machine. Do not broadcast or drop seed when wind velocity exceeds 5 mph. Evenly distribute seed by sowing equal quantities in two directions at right angles to each other.

1. Do not use wet seed or seed that is moldy or otherwise damaged.
2. Do not seed against existing trees. Limit extent of seed to outside edge of planting saucer.

B. Sow seed at a total rate of as noted on plans.

C. Rake seed lightly into top 1/8 inch of soil, roll lightly, and water with fine spray.

D. Protect seeded areas with slopes exceeding 1:4 with erosion-control blankets and 1:6 with erosion-control fiber mesh installed and stapled according to manufacturer's written instructions.

E. Protect seeded areas with erosion-control mats where shown on Drawings; install and anchor according to manufacturer's written instructions.

F. Protect seeded areas with slopes not exceeding 1:6 by spreading straw mulch. Spread uniformly at a minimum rate of 2 tons/acre to form a continuous blanket 1-1/2 inches in loose thickness over seeded areas. Spread by hand, blower, or other suitable equipment.

1. Anchor straw mulch by crimping into soil with suitable mechanical equipment.
2. Bond straw mulch by spraying with asphalt emulsion at a rate of 10 to 13 gal./1000 sq. ft. Take precautions to prevent damage or staining of structures or other plantings adjacent to mulched areas. Immediately clean damaged or stained areas.

G. Protect seeded areas from hot, dry weather or drying winds by applying peat mulch within 24 hours after completing seeding operations. Soak areas, scatter mulch uniformly to a thickness of 3/16 inch, and roll surface smooth.

3.7 HYDROSEEDING

A. Hydroseeding: Mix specified seed, fertilizer, and fiber mulch in water, using equipment specifically designed for hydroseed application. Continue mixing until uniformly blended into homogeneous slurry suitable for hydraulic application.

1. Mix slurry with [fiber-mulch manufacturer's recommended tackifier.
2. Apply slurry uniformly to all areas to be seeded in a one-step process. Apply slurry at a rate so that mulch component is deposited at not less than [1500-lb/acre dry weight, and seed component is deposited at not less than the specified seed-sowing rate.
3. Apply slurry uniformly to all areas to be seeded in a two-step process. Apply first slurry coat at a rate so that mulch component is deposited at not less than 500-lb/acre dry weight, and seed component is deposited at not less than the specified seed-sowing rate. Apply slurry cover coat of fiber mulch (hydromulching) at a rate of 1000 lb/acre.

3.8 SODDING (Not Used)

3.9 PLUGGING (Not Used)

3.10 SPRIGGING (Not Used)

3.11 TURF RENOVATION

A. Renovate existing turf.

B. Renovate existing turf damaged by Contractor's operations, such as storage of materials or equipment and movement of vehicles.

1. Reestablish turf where settlement or washouts occur or where minor regrading is required.
2. Install new planting soil as required.

C. Remove sod and vegetation from diseased or unsatisfactory turf areas; do not bury in soil.

D. Remove topsoil containing foreign materials such as oil drippings, fuel spills, stones, gravel, and other construction materials resulting from Contractor's operations, and replace with new planting soil.

E. Mow, dethatch, core aerate, and rake existing turf.

F. Remove weeds before seeding. Where weeds are extensive, apply selective herbicides as required. Do not use pre-emergence herbicides.

G. Remove waste and foreign materials, including weeds, soil cores, grass, vegetation, and turf, and legally dispose of them off Owner's property.

H. Till stripped, bare, and compacted areas thoroughly to a soil depth of 6 inches

I. Apply soil amendments and initial fertilizers required for establishing new turf and mix thoroughly into top 4 inches of existing soil. Install new planting soil to fill low spots and meet finish grades.

J. Apply seed and protect with straw mulch as required for new turf.

K. Water newly planted areas and keep moist until new turf is established.

3.12 TURF MAINTENANCE

A. Maintain and establish turf by watering, fertilizing, weeding, mowing, trimming, replanting, and performing other operations as required to establish healthy, viable turf. Roll, regrade, and replant bare or eroded areas and remulch to produce a uniformly smooth turf. Provide materials and installation the same as those used in the original installation.

1. Fill in as necessary soil subsidence that may occur because of settling or other processes. Replace materials and turf damaged or lost in areas of subsidence.
2. In areas where mulch has been disturbed by wind or maintenance operations, add new mulch and anchor as required to prevent displacement.
3. Apply treatments as required to keep turf and soil free of pests and pathogens or disease. Use integrated pest management practices whenever possible to minimize the use of pesticides and reduce hazards.

B. Watering: Install and maintain temporary piping, hoses, and turf-watering equipment to convey water from sources and to keep turf uniformly moist to a depth of 4 inches.

1. Schedule watering to prevent wilting, puddling, erosion, and displacement of seed or mulch. Lay out temporary watering system to avoid walking over muddy or newly planted areas.
2. Water turf with fine spray at a minimum rate of 1 inch per week unless rainfall precipitation is adequate.

C. Mow turf as soon as top growth is tall enough to cut. All mowing shall be the contractor's responsibility until final acceptance. Heavy mowing, resulting in grass piles, shall be "double-mowed" or the contractor shall remove the piles. Repeat mowing to maintain 2-1/2 to 3" height without cutting more than 1/3 of grass height. Remove no more than 1/3 of grass-leaf growth in initial or subsequent mowings. Do not delay mowing until grass blades bend over and become matted. Do not mow when grass is wet.

D. Turf Post fertilization: Apply fertilizer after initial mowing and when grass is dry.

1. Use fertilizer that will provide actual nitrogen of at least 1 lb/1000 sq. ft. to turf area.

3.13 SATISFACTORY TURF

A. Turf installations shall meet the following criteria as determined by Architect:

1. Satisfactory Seeded Turf: At end of maintenance period, a healthy, uniform, close stand of grass has been established, free of weeds and surface irregularities, with coverage exceeding 90 percent over and bare spots not exceeding 5 by 5 inches .
2. Satisfactory Sodded Turf: (NOT USED).
3. Satisfactory Plugged Turf: (NOT USED).
4. Satisfactory Sprigged Turf: (NOT USED).

B. Use specified materials to reestablish turf that does not comply with requirements and continue maintenance until turf is satisfactory.

3.14 PESTICIDE APPLICATION

A. Apply pesticides and other chemical products and biological control agents in accordance with requirements of authorities having jurisdiction and manufacturer's written recommendations. Coordinate applications with Owner's operations and others in proximity to the Work. Notify Owner before each application is performed.

B. Post-Emergent Herbicides (Selective and Non-Selective): Apply only as necessary to treat already-germinated weeds and in accordance with manufacturer's written recommendations.

3.15 CLEANUP AND PROTECTION

A. Promptly remove soil and debris created by turf work from paved areas. Clean wheels of vehicles before leaving site to avoid tracking soil onto roads, walks, or other paved areas.

B. Erect temporary fencing or barricades and warning signs as required to protect newly planted areas from traffic. Maintain fencing and barricades throughout initial maintenance period and remove after plantings are established.

C. Remove nondegradable erosion-control measures after grass establishment period.

END OF SECTION 329200

SECTION 330500 - COMMON WORK RESULTS FOR UTILITIES

PART 1 - GENERAL

1.1 RELATED DOCUMENTS

A. Drawings and general provisions of the Contract, including General and Supplementary Conditions and Division 01 Specification Sections, apply to this Section.

1.2 SUMMARY

A. This Section includes the following:

1. Grout.
2. Flowable fill.
3. Piped utility demolition.

1.3 DEFINITIONS

A. Exposed Installations: Exposed to view outdoors or subject to outdoor ambient temperatures and weather conditions.

B. Concealed Installations: Concealed from view and protected from weather conditions and physical contact by building occupants but subject to outdoor ambient temperatures. Examples include installations within unheated shelters.

1.4 DELIVERY, STORAGE, AND HANDLING

A. Deliver pipes and tubes with factory-applied end caps. Maintain end caps through shipping, storage, and handling to prevent pipe end damage and to prevent entrance of dirt, debris, and moisture.

B. Store plastic pipes protected from direct sunlight. Support to prevent sagging and bending.

PART 2 - PRODUCTS

2.1 GROUT

A. Description: ASTM C 1107, Grade B, nonshrink and nonmetallic, dry hydraulic-cement grout.

1. Characteristics: Post hardening, volume adjusting, nonstaining, noncorrosive, nongaseous, and recommended for interior and exterior applications.
2. Design Mix: 5000-psi , 28-day compressive strength.
3. Packaging: Premixed and factory packaged.

2.2 FLOWABLE FILL

A. Description: Low-strength-concrete, flowable-slurry mix.

1. Cement: ASTM C 150, Type I, portland.
2. Density: 115- to 145-lb/cu. ft..
3. Aggregates: ASTM C 33, natural sand, fine and crushed gravel or stone, coarse.
4. Water: Comply with ASTM C 94/C 94M.
5. Strength: 100 to 200 psig at 28 days.

PART 3 - EXECUTION

3.1 PIPED UTILITY DEMOLITION

A. Refer to Division 01 Section "Cutting and Patching" and Division 02 Section "Selective Structure Demolition" for general demolition requirements and procedures.

B. Disconnect, demolish, and remove piped utility systems, equipment, and components indicated to be removed.

1. Piping to Be Removed: Remove portion of piping indicated to be removed and cap or plug remaining piping with same or compatible piping material.
2. Piping to Be Abandoned in Place: Drain piping. Fill abandoned piping with flowable fill, and cap or plug piping with same or compatible piping material.

C. If pipe, insulation, or equipment to remain is damaged in appearance or is unserviceable, remove damaged or unserviceable portions and replace with new products of equal capacity and quality.

3.2 GROUTING

A. Mix and install grout for equipment base bearing surfaces, pump and other equipment base plates, and anchors.

B. Clean surfaces that will come into contact with grout.

C. Provide forms as required for placement of grout.

D. Avoid air entrapment during placement of grout.

E. Place grout, completely filling equipment bases.

F. Place grout on concrete bases and provide smooth bearing surface for equipment.

G. Place grout around anchors.

H. Cure placed grout.

END OF SECTION 330500

SECTION 334100 - STORM UTILITY DRAINAGE PIPING

PART 1 - GENERAL

1.1 RELATED DOCUMENTS

A. Drawings and general provisions of the Contract, including General and Supplementary Conditions and Division 01 Specification Sections, apply to this Section.

1.2 SUMMARY

A. This Section includes gravity-flow, nonpressure storm drainage outside the building, with the following components:

1. Precast concrete manholes.
2. Catch Basins
3. Storm drain pipe and appurtenances

1.3 PERFORMANCE REQUIREMENTS

A. Gravity-Flow, Nonpressure, Drainage-Piping Pressure Rating: 10-foot head of water. Pipe joints shall be at least watertight, unless otherwise indicated.

1.4 SUBMITTALS

A. Product Data: For the following:

1. Storm drain pipe.

B. Shop Drawings: For the following:

1. Manholes: Include plans, elevations, sections, details, and frames and covers.
2. Catch Basins and Stormwater Inlets. Include plans, elevations, sections, details, and frames, covers, and grates.
3. Stormwater Detention Structures: Include plans, elevations, sections, details, frames and covers, design calculations, and concrete design-mix report.

C. Field quality-control test reports.

1.5 DELIVERY, STORAGE, AND HANDLING

A. Protect pipe, pipe fittings, and seals from dirt and damage.

B. Handle manholes according to manufacturer's written rigging instructions.

C. Handle catch basins and stormwater inlets according to manufacturer's written rigging instructions.

D. Handle downspout boots according to manufacturer’s written instructions.

1.6 PROJECT CONDITIONS

A. Interruption of Existing Storm Drainage Service: Do not interrupt service to facilities occupied by Owner or others unless permitted under the following conditions and then only after arranging to provide temporary service according to requirements indicated:

1. Notify Construction Manager Owner no fewer than five days in advance of proposed interruption of service.
2. Do not proceed with interruption of service without Construction Manager's written permission.

B. Site Information: Perform site survey, research public utility records, and verify existing utility locations. Verify that Storm Drainage System piping may be installed in compliance with original design and referenced standards.

1. Locate existing Storm Drainage System piping and structures that are to be abandoned, closed or removed.

PART 2 - PRODUCTS

2.1 MANUFACTURERS

A. In other Part 2 articles where titles below introduce lists, the following requirements apply to product selection:

1. Available Manufacturers: Subject to compliance with requirements, manufacturers offering products that may be incorporated into the Work include, but are not limited to, manufacturers specified.

2.2 PIPING MATERIALS

A. Refer to Part 3 "Piping Applications" Article for applications of pipe, fitting, and joining materials.

2.3 PE PIPE AND FITTINGS

A. Corrugated PE Drainage Pipe and Fittings NPS 48 and Smaller: AASHTO M 252M, Type S, with smooth waterway for coupling joints.

1. Watertight Couplings: PE sleeve with ASTM D 1056, Type 2, Class A, Grade 2 gasket material that mates with tube and fittings.
2. Corrugated PE Pipe and Fittings NPS 12 to NPS 48: AASHTO M 294M, Type S, with smooth waterway for coupling joints.
3. Watertight Couplings: PE sleeve with ASTM D 1056, Type 2, Class A, Grade 2 gasket material that mates with pipe and fittings.

B. Corrugated PE Pipe and Fittings NPS 56 and NPS 60: AASHTO MP7, Type S, with smooth waterway for coupling joints.

1. Watertight Couplings: PE sleeve with ASTM D 1056, Type 2, Class A, Grade 2 gasket material that mates with pipe and fittings.

2.4 REINFORCED CONCRETE PIPE:

1. Materials shall be in accordance with ASSHTO M-170.
2. Pipe class shall be Class III unless otherwise indicated on the drawings.
3. Joints to be tongue and groove.
4. Joining material may be either:

a. Portland cement mortar consisting of 1 part Portland cement, 2 parts sand and enough water to provide a workable mix, or
b. Bitumastic joint filler equal to Ram-Neck.

5. Joints shall be watertight under full flow conditions.

2.5 NONPRESSURE-TYPE PIPE COUPLINGS

A. Comply with ASTM C 1173, elastomeric, sleeve-type, reducing or transition coupling, for joining underground nonpressure piping. Include ends of same sizes as piping to be joined, and corrosion-resistant-metal tension band and tightening mechanism on each end.

B. Sleeve Materials:

1. For Concrete Pipes: ASTM C 443, rubber.
2. For Dissimilar Pipes: ASTM D 5926, PVC or other material compatible with pipe materials being joined.

2.6 MANHOLES

A. Precast Concrete Manholes: ASTM C 478, precast reinforced concrete, of depth indicated with provision for rubber gasket joints.

1. Base Section: 8-inch minimum thickness for floor slab and 5-inch minimum thickness for walls and base riser section, and having a separate base slab or base section with integral floor.
2. Riser Sections: 5-inch minimum thickness; 48-inch diameter, and lengths to provide depth indicated.
3. Top Section: Eccentric cone type, unless concentric cone or flat-slab-top type is indicated. Top of cone to match grade rings.
4. Grade Rings: Provide 2 or 3 reinforced concrete rings, with 12 maximum inches total thickness and match 24-inch diameter frame and cover.
5. Gaskets: ASTM C 443, rubber.
6. Steps: Cast into base, riser, and top sections sidewall at 12-to 16-inch intervals.
7. Pipe Connectors: ASTM C 923, resilient, of size required, for each pipe connecting to base section.
8. Channel and Bench: Concrete or Brick.
9. Coat Exterior Surface with two (2) coats of coal-tar epoxy, 15 mil. Minimum thickness.

B. Manhole Steps: Wide enough for a man to place both feet on one step and designed to prevent lateral slippage off the step.

1. Material: Steel-reinforced plastic.
2. Manhole Frames and Covers: ASTM A 536, Grade 60-40-18, heavy-duty, ductile iron, 24-inch inside diameter by 7- to 9-inch riser with 4-inch minimum width flange, and 26-inch-diameter cover, indented top design, with lettering "STORMDRAIN" cast into cover.

2.7 CATCH BASINS & INLETS

A. Standard Precast Concrete Catch Basins & inlets: ASTM C 478, precast, reinforced concrete, of depth indicated, with provision for sealant joints.

1. Catch basins & inlets shall be according to the local utility standard as noted on the structure schedule.
1. All materials for catch basins, steps, frames and grates, curb inlets and other appurtences and incidentals shall conform to Section 708 of DelDOT Specifications and Standard Details for structures noted as DelDOT structures on the plans.

B. Standard PVC Surface Drainage Inlets and In-Line Drains as indicated on the drawings.

1. Ductile Iron Grates shall be considered an integral part of the surface drainage structure and shall be furnished by the same manufacturer.
2. Structures shall be as manufactured by Nyloplast a division of Advanced Drainage Systems, Inc. or approved equal.

2.8 STORMWATER DETENTION STRUCTURES

A. Cast-in-Place or Pre-Cast Concrete, Stormwater Detention Structures: Construct of reinforced-concrete bottom, walls, and top; designed according to ASTM C 890 for A-16 (ASSHTO HS20-44), heavy-traffic, structural loading; of depth, shape, dimensions, and appurtenances indicated.

1. Ballast: Increase thickness of concrete, as required to prevent flotation.
2. Steps: Individual FRP steps, FRP ladder, or ASTM A 615/A 615M, deformed, 1/2-inch steel reinforcing rods encased in ASTM D 4101, PP, wide enough to allow worker to place both feet on 1 step and designed to prevent lateral slippage off of step. Cast or anchor steps into sidewalls at 12- to 16-inch intervals. Omit steps if total depth from floor of structure to finished grade is less than 36 inches.
3. Trash Rack: Include installation of peaked roof trash rack as shown on the Precast Outlet Structure detail.

B. Manhole Frames and Covers: ASTM A 536, Grade 60-40-18, ductile-iron castings designed for heavy-duty service Include indented top design with lettering "STORM SEWER" cast into cover.

2.9 CONCRETE

A. General: Cast-in-place concrete according to ACI 318, and the following:

1. Cement: ASTM C 150, Type II.
2. Fine Aggregate: ASTM C 33, sand.
3. Coarse Aggregate: ASTM C 33, crushed gravel.
4. Water: Potable.

B. Portland Cement Design Mix: 4000 psi minimum, with 0.45 maximum water/cementitious materials ratio.

1. Reinforcing Fabric: ASTM A 185/A 185M, steel, welded wire fabric, plain.
2. Reinforcing Bars: ASTM A 615/A 615M, Grade 60 (420 MPa) deformed steel.

C. Manhole Channels and Benches: Factory or field formed from concrete. Portland cement design mix, 4000 psi minimum, with 0.45 maximum water/cementitious materials ratio. Include channels and benches in manholes.

1. Channels: Concrete invert, formed to same width as connected piping, with height of vertical sides to three-fourths of pipe diameter. Form curved channels with smooth, uniform radius and slope.

   a. Invert Slope: 1 percent through manhole.

2. Benches: Concrete, sloped to drain into channel.

   a. Slope: 4 percent.

D. Ballast and Pipe Supports: Portland cement design mix, 3000 psi minimum, with 0.58 maximum water/cementitious materials ratio.

1. Reinforcing Fabric: ASTM A 185/A 185M, steel, welded wire fabric, plain.
2. Reinforcing Bars: ASTM A 615/A 615M, Grade 60 (420 MPa) deformed steel.

2.10 CLEANOUTS

A. Cast-Iron Cleanouts:

1. Manufacturers: Subject to compliance with requirements, available manufacturers offering products that may be incorporated into the Work include, but are not limited to, the following:

   a. Josam Company.
   b. MIFAB, Inc.
   c. Smith, Jay R. Mfg. Co.
   d. Tyler Pipe.
   e. Watts Water Technologies, Inc.
   f. Zurn Specification Drainage Operation; Zurn Plumbing Products Group.

2. Description: ASME A112.36.2M, round, gray-iron housing with clamping device and round, secured, scoriated, gray-iron cover. Include gray-iron ferrule with inside calk or spigot connection and countersunk, tapered-thread, brass closure plug.
3. Top-Loading Classification(s): Heavy Duty.
4. Sewer Pipe Fitting and Riser to Cleanout: ASTM A 74, Service class, cast-iron soil pipe and fittings.

B. Plastic Cleanouts:

1. Manufacturers: Subject to compliance with requirements, available manufacturers offering products that may be incorporated into the Work include, but are not limited to, the following:

   a. Canplas LLC.
   b. IPS Corporation.
   c. NDS Inc.
   d. Plastic Oddities; a division of Diverse Corporate Technologies, Inc.
   e. Sioux Chief Manufacturing Company, Inc.
   f. Zurn Light Commercial Products Operation; Zurn Plumbing Products Group.

2. Description: PVC body with PVC threaded plug. Include PVC sewer pipe fitting and riser to cleanout of same material as sewer piping.

PART 3 - EXECUTION

3.1 EARTHWORK

A. Excavation, trenching, and backfilling are specified in Division 31 Section "Earth Moving."

3.2 PIPING APPLICATIONS

A. Pipe couplings and special pipe fittings with pressure ratings at least equal to piping rating may be used in applications below, unless otherwise indicated.

1. Use nonpressure-type flexible couplings where required to join gravity-flow, nonpressure sewer piping, unless otherwise indicated.

    a. Flexible or rigid couplings for same or minor difference OD pipes.

    b. Join reinforced-concrete sewer piping according to ACPA's "Concrete Pipe Installation Manual" for rubber-gasket joints.

    c. Join dissimilar pipe materials with nonpressure-type flexible or rigid couplings.

B. Gravity-Flow, Nonpressure Sewer Piping: Use the following pipe materials for each size range and material as indicated on drawings:

1. NPS 4 and NPS 36 Corrugated PE drainage pipe and fittings, watertight couplings, and coupled joints.

2. Reinforced-Concrete Sewer Pipe and Fittings: ASTM C 76, with groove and tongue ends.

3.3 PIPING INSTALLATION

A. General Locations and Arrangements: Drawing plans and details indicate general location and arrangement of underground storm drainage piping. Location and arrangement of piping layout take design considerations into account. Install piping as indicated, to extent practical. Where specific installation is not indicated, follow piping manufacturer's written instructions.

B. Install piping beginning at low point, true to grades and alignment indicated with unbroken continuity of invert. Place bell ends of piping facing upstream. Install gaskets, seals, sleeves, and couplings according to manufacturer's written instructions for use of lubricants, cements, and other installation requirements.

C. Install manholes for changes in direction unless fittings are indicated. Use fittings for branch connections unless direct tap into existing stormdrain system is indicated.

D. Install proper size increasers, reducers, and couplings where different sizes or materials of pipes and fittings are connected. Reducing size of piping in direction of flow is prohibited.

E. Tunneling: Install pipe under streets or other obstructions that cannot be disturbed by tunneling, jacking, or a combination of both.

F. Install gravity-flow, nonpressure drainage piping according to the following:

1. Install piping pitched down in direction of flow, at minimum slope of 1 percent, unless otherwise indicated.
2. Install piping below frost line.
3. Install corrugated steel piping according to ASTM A 798/A 798M.
4. Install nonreinforced-concrete sewer piping according to ASTM C 1479 and ACPA's "Concrete Pipe Installation Manual."
5. Install reinforced-concrete sewer piping according to ASTM C 1479 and ACPA's "Concrete Pipe Installation Manual."
6. Install PE corrugated sewer piping according to CPPA's "Recommended Installation Practices for Corrugated Polyethylene Pipe and Fittings."

3.4 PIPE JOINT CONSTRUCTION

A. Basic pipe joint construction is specified in Division 33 Section "Common Work Results for Utilities." Where specific joint construction is not indicated, follow piping manufacturer's written instructions.

B. Join gravity-flow, nonpressure drainage piping according to the following:

1. Join nonreinforced-concrete sewer piping according to ASTM C 14 and ACPA's "Concrete Pipe Installation Manual" for rubber-gasket joints.
2. Join reinforced-concrete sewer piping according to ACPA's "Concrete Pipe Installation Manual" for rubber-gasket joints.
3. Join dissimilar pipe materials with nonpressure-type flexible or rigid couplings.
4. Join corrugated PE piping according to CPPA 100 and the following:

a. Use watertight couplings for Type 1, watertight joints.

3.5 MANHOLE INSTALLATION

A. General: Install manholes, complete with appurtenances and accessories indicated.

B. Install precast concrete manhole sections according to ASTM C 891.

3.6 CATCH BASIN INSTALLATION

A. Construct catch basins to sizes and shapes indicated.

B. Set frames and grates to elevations indicated.

3.7 STORMWATER INLET AND OUTLET INSTALLATION

A. Construct inlet head walls, aprons, and sides of reinforced concrete, as indicated.

B. Install outlets that spill onto grade, anchored with concrete, where indicated.

C. Install outlets that spill onto grade, with flared end sections that match pipe, where indicated.

D. Construct energy dissipaters at outlets, as indicated.

3.8 CONCRETE PLACEMENT

A. Place cast-in-place concrete according to ACI 318/318R.

3.9 CONNECTIONS

A. Connect nonpressure, gravity-flow drainage piping in building's storm building drains specified in Division 22.

3.10 CLOSING ABANDONED STORM DRAINAGE SYSTEMS

A. Abandoned Piping: Close open ends of abandoned underground piping indicated to remain in place. Include closures strong enough to withstand hydrostatic and earth pressures that may result after ends of abandoned piping have been closed. Use either procedure below:

1. Close open ends of piping with at least 8-inch- thick, brick masonry bulkheads.
2. Close open ends of piping with threaded metal caps, plastic plugs, or other acceptable methods suitable for size and type of material being closed. Do not use wood plugs.

B. Abandoned Manholes and Structures: Excavate around manholes and structures as required and use one procedure below:

1. Remove manhole or structure and close open ends of remaining piping.
2. Remove top of manhole or structure down to at least 36 inches below final grade. Fill to within 12 inches of top with stone, rubble, gravel, or compacted dirt. Fill to top with concrete.

C. Backfill to grade according to Division 31 Section "Earth Moving."

3.11 IDENTIFICATION

A. Materials and their installation are specified in Division 31 Section "Earth Moving." Arrange for installation of green warning tape directly over piping and at outside edge of underground structures.

1. Use detectable warning tape over nonferrous piping and over edges of underground structures.

3.12 FIELD QUALITY CONTROL

A. Inspect interior of piping to determine whether line displacement or other damage has occurred. Inspect after approximately 24 inches of backfill is in place, and again at completion of Project.

1. Submit separate reports for each system inspection.
2. Defects requiring correction include the following:

a. Alignment: Less than full diameter of inside of pipe is visible between structures.
b. Deflection: Flexible piping with deflection that prevents passage of ball or cylinder of size not less than 92.5 percent of piping diameter.
c. Crushed, broken, cracked, or otherwise damaged piping.
d. Infiltration: Water leakage into piping.
e. Exfiltration: Water leakage from or around piping.

3. Replace defective piping using new materials, and repeat inspections until defects are within allowances specified.
4. Reinspect and repeat procedure until results are satisfactory.

B. Test new piping systems, and parts of existing systems that have been altered, extended, or repaired, for leaks and defects.

1. Do not enclose, cover, or put into service before inspection and approval.
2. Test completed piping systems according to authorities having jurisdiction.
3. Schedule tests and inspections by authorities having jurisdiction with at least 24 hours' advance notice.
4. Submit separate report for each test.

3.13 CLEANING

A. Clean interior of piping of dirt and superfluous materials. Flush with potable water.

END OF SECTION 334100