Project Manual

William F. Cooke, Jr. Elementary School

Hockessin, Delaware

Volume II

BECKER MORGAN GROUP, INC.

BECKER MORGAN GROUP

ARCHITECTURE ENGINEERING

Red Clay Consolidated School District

2012080.00
July 1, 2013

TABLE OF CONTENTS

VOLUME I

CD	TITLE PAGE/ CONSULTANT DIRECTORY
000110	TABLE OF CONTENTS
000115	LIST OF DRAWINGS

DIVISION 00 – CONTRACT REQUIREMENTS

001100	ADVERTISEMENT FOR BIDS
001110	INVITATION TO BID
002113	INSTRUCTIONS TO BIDDERS
003132	GEOTECHNICAL REPORTS
	GEOTECHNICAL REPORT BY HILLIS-CARNES ENGINEERING (March 12, 2013)
	ADDITIONAL HAND AUGER BORING REPORT BY HILLIS-CARNES ENGINEERING (Date…….)
	PAVEMENT CORING REPORT BY HILLIS-CARNES ENGINEERING (Date…….)
004000	BID FORM
004300	BID BOND
004320	SUBCONTRACTOR APPROVAL
004350	LISTING OF SUBCONTRACTORS
005200	AGREEMENT BETWEEN OWNER AND CONSTRUCTION MANAGER (AIA A132-2009 Edition)
005413	SUPPLEMENT TO AGREEMENT BETWEEN OWNER AND CONTRACTOR
006113	PERFORMANCE BOND
006100	PAYMENT BOND
006200	APPLICATION AND CERTIFICATE FOR PAYMENT (AIA G732-2009 Edition)
006250	CONTINUATION SHEET (AIA G703-1992 Edition)
007000	GENERAL CONDITIONS TO THE CONTRACT FOR CONSTRUCTION (AIA Document A232-2009 Edition)
007300	SUPPLEMENTARY GENERAL CONDITIONS TO THE CONTRACT
007350	GENERAL REQUIREMENTS
007400	DELAWARE PREVAILING WAGE RATES
	DELAWARE PREVAILING WAGE RATES REPORTING FORM
	DELAWARE PREVAILING WAGE RATES-CERTIFIED BUILDING RATES 2013

DIVISION 01 - GENERAL REQUIREMENTS

011000	SUMMARY
011200	SUMMARY OF CONTRACTS / SCOPES OF WORK
012300	ALTERNATES
012500	CONTRACT MODIFICATION PROCEDURES
012550	SUBSTITUTION PROCEDURES
012650	CHANGE ORDER REQUEST SUBMISSION FORMAT
012900	PAYMENT PROCEDURES
013100	PROJECT MANAGEMENT AND COORDINATION
013110	PROJECT COORDINATION
013200	CONSTRUCTION PROGRESS DOCUMENTATION
013210	CONSTRUCTION SCHEDULE
013500	SPECIAL PROJECT PROCEDURES
013520	SAFETY REQUIREMENTS AND LOSS CONTROL
013300	SUBMITTAL PROCEDURES
014000	QUALITY REQUIREMENTS
014200	REFERENCES
015000	TEMPORARY FACILITIES AND CONTROLS

016000 PRODUCT REQUIREMENTS
017300 EXECUTION
017700 CLOSEOUT PROCEDURES
017750 CLOSEOUT REQUIREMENTS
CONTRACTOR'S AFFIDAVIT OF PAYMENT OF DEBTS AND CLAIMS (AIA Document G706-1994 Edition)
CONTRACTOR'S AFFIDAVIT OF RELEASE OF LIENS (AIA Document G706A-1994 Edition)
CONSENT OF SURETY TO FINAL PAYMENT (AIA Document G707-1994 Edition)
017823 OPERATION AND MAINTENANCE DATA
017839 PROJECT RECORD DOCUMENTS
017900 DEMONSTRATION & TRAINING
018000 RELEASE OF ELECTRONIC MEDIA

VOLUME II

DIVISION 02 - EXISTING CONDITIONS

NA

DIVISION 03 - CONCRETE

033000 CAST-IN-PLACE CONCRETE

DIVISION 04 - MASONRY

042000 UNIT MASONRY
047000 ARCHITECTURAL STONE VENEER
047200 CAST STONE MASONRY
047300 CAST STONE CONCRETE MASONRY VENEER

DIVISION 05 - METALS

051200 STRUCTURAL STEEL FRAMING
051213 ARCHITECTURALLY EXPOSED STRUCTURAL STEEL FRAMING
052100 STEEL JOIST FRAMING
053100 STEEL DECKING
054000 COLD-FORMED METAL FRAMING
055000 METAL FABRICATIONS
055113 METAL STAIRS
055213 PIPE AND TUBE RAILINGS

DIVISION 06 - WOOD, PLASTICS AND COMPOSITES

061000 ROUGH CARPENTRY
061600 SHEATHING
064023 INTERIOR ARCHITECTURAL WOODWORK

DIVISION 07 - THERMAL AND MOISTURE PROTECTION

071113 BITUMINOUS DAMPPROOFING
071326 SELF-ADHERING SHEET WATERPROOFING
072100 THERMAL INSULATION
072110 INSULATING AIR BARRIER SYSTEM
074113 STANDING SEAM ROOF PANELS
074213 METAL WALL PANELS
075323 ETHYLENE-PROPYLENE-DIENE-MONOMER (EPDM) ROOFING
076200 FLASHING AND SHEET METAL
077200 ROOF ACCESSORIES

078413 PENETRATION FIRESTOPPING
079200 JOINT SEALANTS
079500 EXPANSION CONTROL

DIVISION 08 - OPENINGS

081113 HOLLOW METAL DOORS AND FRAMES
081416 FLUSH WOOD DOORS
083113 ACCESS DOORS AND FRAMES
083323 OVERHEAD COILING DOORS
083326 OVERHEAD COILING GRILLES
084113 ALUMINUM FRAMED ENTRANCES AND STOREFRONTS
084413 GLAZED ALUMINUM CURTAIN WALLS
084510 TRANSLUCENT WALL ASSEMBLIES
087100 DOOR HARDWARE
088000 GLAZING
088113 DECORATIVE GLASS GLAZING
089119 LOUVERS

DIVISION 09 – FINISHES

092216 NON-STRUCTURAL METAL FRAMING
092900 GYPSUM BOARD
093000 TILING
095113 ACOUSTICAL PANEL CEILINGS
096513 RESILIENT BASE AND ACCESSORIES
096516 RESILIENT SHEET FLOORING
096519 RESILIENT TILE FLOORING
096566 RESILIENT ATHLETIC FLOORING
096623 RESINOUS MATRIX TERRAZZO FLOORING
096723 RESINOUS FLOORING
096815 CARPET
098413 FABRIC-WRAPPED ACOUSTICAL PANELS
098430 WOOD VENEER WALL PANELS
099113 EXTERIOR PAINTING
099123 INTERIOR PAINTING
099600 HIGH PERFORMANCE COATINGS

DIVISION 10 - SPECIALTIES

101100 VISUAL DISPLAY UNITS
101200 DISPLAY CASES
101400 SIGNAGE
102113 TOILET COMPARTMENTS
102123 CUBICLE CURTAINS AND TRACK
102239 FOLDING PANEL PARTITIONS
102800 TOILET, BATH AND LAUNDRY ACCESSORIES
104161 SITE LED SIGNS
104200 PLAQUES
104413 FIRE EXTINGUISHER AND DEFIBRILLATOR CABINETS
104416 FIRE EXTINGUISHERS
105113 METAL LOCKERS
105613 METAL STORAGE SHELVING
107316 PRE-FABRICATED CANOPY SYSTEMS
107500 FLAGPOLES

DIVISION 11 - EQUIPMENT

113100 RESIDENTIAL APPLIANCES

114000 FOOD SERVICE EQUIPMENT
116143 STAGE CURTAINS
116623 GYMNASIUM EQUIPMENT

DIVISION 12 - FURNISHINGS

122413 ROLLER WINDOW SHADES
123200 MANUFACTURED WOOD CASEWORK
123280 MEDIA SHELVING AND CASEWORK
129300 SITE FURNISHINGS

DIVISION 13 - SPECIAL CONSTRUCTION

N/A

DIVISION 14 – CONVEYING EQUIPMENT

142400 HYDRAULIC ELEVATORS

VOLUME III

DIVISION 21 - FIRE PROTECTION

210500 COMMON WORK RESULTS FOR FIRE SUPPRESSION
210513 MOTOR REQUIREMENTS FOR FIRE SUPPRESSION EQUIPMENT
210548 VIBRATION AND SEISMIC CONTROLS FOR EQUIPMENT
210553 IDENTIFICATION FOR FIRE SUPPRESSION PIPING AND EQUIPMENT
211200 FIRE SUPPRESSION STANDPIPES
211300 FIRE SUPPRESSTION SPRINKLER SYSTEMS

DIVISION 22 - PLUMBING

220516 EXPANSION FITTINGS AND LOOPS FOR PLUMBING PIPING
220519 METERS AND GAGES FOR PLUMBING PIPING
220553 IDENTIFICATIION FOR PLUMBING PIPING AND EQUIPMENT
220716 PLUMBING EQUIPMENT INSULATION
220719 PLUMBING PIPING INSULATION
221005 PLUMBING PIPING
221006 PLUMBING PIPING SPECIALTIES
221113 FACILITY WATER DISTRIBUTION PIPING
221313 FACILITY SANITARY SEWERS
223000 PLUMBING EQUIPMENT
224000 PLUMBING FIXTURES

DIVISION 23 - HVAC

230513 MOTOR REQUIREMENTS FOR HVAC AND PLUMBING EQUIPMENT
230516 EXPANSION FITTINGS AND LOOPS FOR HVAC PIPING
230519 METERS AND GAGES FOR HVAC PIPING
230548 VIBRATION AND SEISMIC EQUIPMENT
230553 IDENTIFICATION FOR HVAC PIPING AND EQUIPMENT
230593 TESTING, ADJUSTING, AND BALANCING FOR HVAC
230713 DUCT INSULATION
230716 HVAC EQUIPMENT INSULATION
230719 HVAC PIPING INSULATION
230800 COMMISSIONING OF HVAC
230913 INSTRUMENTATION AND CONTROL DEVICES FOR HVAC
230923 DIRECT DIGITAL CONTROL SYSTEM FOR HVAC

230993	SEQUENCE OF OPERATIONS FOR HVAC CONTROLS
232300	REFRIGERANT PIPING
233100	HVAC DUCTS AND CASINGS
233300	AIR DUCT ACCESSORIES
233423	HVAC POWER VENTILATORS
233700	AIR OUTLETS AND INLETS
237223	PACKAGED AIR-TO-AIR ENERGY RECOVERY UNITS
237413	PACKAGED OUTDOOR CENTRAL STATION AIR HANDLING UNITS
238127	SMALL SPLIT SYSTEM HEATING AND COOLING
238129	VARIABLE REFRIGERANT VOLUME (VRV) HVAC SYSTEM

DIVISION 26 - ELECTRICAL

260519	LOW VOLTAGE ELECTRICAL POWER CONDUCTORS AND CABLES (600V AND LESS)
260526	GROUNDING AND BONDING FOR ELECTRICAL SYSTEMS
260529	HANGERS AND SUPPORTS FOR ELECTRICAL SYSTEMS
260534	CONDUIT
260535	SURFACE RACEWAYS
260537	BOXES
260553	IDENTIFICATION FOR ELECTRICAL SYSTEMS
260573	OVERCURRENT PROTECTIVE DEVICE COORDINATION STUDY
260919	ENCLOSED CONTACTORS
262200	LOW VOLTAGE TRANSFORMERS
262413	SWITCHBOARDS
262416	PANELBOARDS
262701	ELECTRICAL SERVICE ENTRANCE
262717	EQUIPMENT WIRING
262726	WIRING DEVICES
262813	FUSES
262817	ENCLOSED CIRCUIT BREAKERS
262818	ENCLOSED SWITCHES
263213	ENGINE GENERATORS
263600	TRANSFER SWITCHES
265100	INTERIOR LIGHTING
265600	EXTERIOR LIGHTING

DIVISION 27 - COMMUNICATION

271000	STRUCTURED CABLING
274116	INTEGRATED AUDIO-VIDEO SYSTEMS AND EQUIPMENT FOR CLASSROOMS
275117	PUBLIC ADDRESS SYSTEM

DIVISION 28 - ELECTRONIC SAFETY AND SECURITY

283100	FIRE DETECTION AND ALARM

DIVISION 31 - EARTHWORK

311000	SITE CLEARING
312000	EARTH MOVING
312319	DEWATERING
315000	EXCAVATION SUPPORT AND PROTECTION

DIVISION 32 - EXTERIOR IMPROVEMENTS

321216	ASPHALT PAVING
321313	CONCRETE PAVING
323116	WELDED WIRE FENCES AND GATES
329100	TURF AND GRASSES

DIVISION 33 - UTILITIES

330500 COMMON WORK RESULTS FOR UTILITIES
334100 STORM UTILITY DRAINAGE PIPING

END OF TABLE OF CONTENTS

SECTION 033000 - CAST-IN-PLACE CONCRETE

PART 1 - GENERAL

1.1 RELATED DOCUMENTS

A. Drawings and general provisions of the Contract, including General and Supplementary Conditions and Division 01 Specification Sections, apply to this Section.

1.2 SUMMARY

A. Section includes cast-in-place concrete, including formwork, reinforcement, concrete materials, mixture design, placement procedures, and finishes, for the following:

1. Footings.
2. Foundation walls.
3. Slabs-on-grade.
4. Suspended slabs.
5. Concrete toppings.

B. Related Sections:

1. Section 312000 "Earth Moving" for drainage fill under slabs-on-grade.
2. Section 321313 "Concrete Paving" for concrete pavement and walks.
3. Section 321316 "Decorative Concrete Paving" for decorative concrete pavement and walks.

1.3 DEFINITIONS

A. Cementitious Materials: Portland cement alone or in combination with one or more of the following: blended hydraulic cement, fly ash and other pozzolans, ground granulated blast-furnace slag, and silica fume; subject to compliance with requirements.

1.4 ACTION SUBMITTALS

A. Product Data: For each type of product indicated.

B. Design Mixtures: For each concrete mixture. Submit alternate design mixtures when characteristics of materials, Project conditions, weather, test results, or other circumstances warrant adjustments.

1. Indicate amounts of mixing water to be withheld for later addition at Project site.

C. Steel Reinforcement Shop Drawings: Placing drawings that detail fabrication, bending, and placement. Include bar sizes, lengths, material, grade, bar schedules, stirrup spacing, bent bar diagrams, bar arrangement, splices and laps, mechanical connections, tie spacing, hoop spacing, and supports for concrete reinforcement.

1.5 INFORMATIONAL SUBMITTALS

A. Welding certificates.

B. Material Certificates: For each of the following, signed by manufacturers:

1. Cementitious materials.
2. Admixtures.
3. Form materials and form-release agents.
4. Steel reinforcement and accessories.
5. Fiber reinforcement.
6. Waterstops.
7. Curing compounds.
8. Floor and slab treatments.
9. Bonding agents.
10. Adhesives.
11. Vapor retarders.
12. Semirigid joint filler.
13. Joint-filler strips.
14. Repair materials.

C. Material Test Reports: For the following, from a qualified testing agency, indicating compliance with requirements:

1. Aggregates. Include service record data indicating absence of deleterious expansion of concrete due to alkali aggregate reactivity.

D. Floor surface flatness and levelness measurements indicating compliance with specified tolerances.

E. Field quality-control reports.

F. Minutes of preinstallation conference.

1.6 QUALITY ASSURANCE

A. Installer Qualifications: A qualified installer who employs on Project personnel qualified as ACI-certified Flatwork Technician and Finisher and a supervisor who is an ACI-certified Concrete Flatwork Technician.

B. Manufacturer Qualifications: A firm experienced in manufacturing ready-mixed concrete products and that complies with ASTM C 94/C 94M requirements for production facilities and equipment.

1. Manufacturer certified according to NRMCA's "Certification of Ready Mixed Concrete Production Facilities."

C. Testing Agency Qualifications: An independent agency, acceptable to authorities having jurisdiction, qualified according to ASTM C 1077 and ASTM E 329 for testing indicated.

1. Personnel conducting field tests shall be qualified as ACI Concrete Field Testing Technician, Grade 1, according to ACI CP-1 or an equivalent certification program.
2. Personnel performing laboratory tests shall be ACI-certified Concrete Strength Testing Technician and Concrete Laboratory Testing Technician - Grade I. Testing Agency laboratory supervisor shall be an ACI-certified Concrete Laboratory Testing Technician - Grade II.

D. Source Limitations: Obtain each type or class of cementitious material of the same brand from the same manufacturer's plant, obtain aggregate from single source, and obtain admixtures from single source from single manufacturer.

E. ACI Publications: Comply with the following unless modified by requirements in the Contract Documents:

1. ACI 301, "Specifications for Structural Concrete."
2. ACI 117, "Specifications for Tolerances for Concrete Construction and Materials."

F. Concrete Testing Service: Engage a qualified independent testing agency to perform material evaluation tests and to design concrete mixtures.

G. Preinstallation Conference: Conduct conference at Project site.

1. Before submitting design mixtures, review concrete design mixture and examine procedures for ensuring quality of concrete materials. Require representatives of each entity directly concerned with cast-in-place concrete to attend, including the following:

a. Contractor's superintendent.
b. Independent testing agency responsible for concrete design mixtures.
c. Ready-mix concrete manufacturer.
d. Concrete subcontractor.
e. Special concrete finish subcontractor.

2. Review special inspection and testing and inspecting agency procedures for field quality control, concrete finishes and finishing, cold- and hot-weather concreting procedures, curing procedures, construction contraction and isolation joints, and joint-filler strips, semirigid joint fillers, forms and form removal limitations, vapor-retarder installation, anchor rod and anchorage device installation tolerances, steel reinforcement installation, floor and slab flatness and levelness measurement, concrete repair procedures, and concrete protection.

1.7 DELIVERY, STORAGE, AND HANDLING

A. Steel Reinforcement: Deliver, store, and handle steel reinforcement to prevent bending and damage. Avoid damaging coatings on steel reinforcement.

B. Waterstops: Store waterstops under cover to protect from moisture, sunlight, dirt, oil, and other contaminants.

PART 2 - PRODUCTS

2.1 FORM-FACING MATERIALS

A. Smooth-Formed Finished Concrete: Form-facing panels that will provide continuous, true, and smooth concrete surfaces. Furnish in largest practicable sizes to minimize number of joints.

1. Plywood, metal, or other approved panel materials.
2. Exterior-grade plywood panels, suitable for concrete forms, complying with DOC PS 1, and as follows:

a. High-density overlay, Class 1 or better.

b. Medium-density overlay, Class 1 or better; mill-release agent treated and edge sealed.
c. Structural 1, B-B or better; mill oiled and edge sealed.
d. B-B (Concrete Form), Class 1 or better; mill oiled and edge sealed.

B. Rough-Formed Finished Concrete: Plywood, lumber, metal, or another approved material. Provide lumber dressed on at least two edges and one side for tight fit.

C. Forms for Cylindrical Columns, Pedestals, and Supports: Metal, glass-fiber-reinforced plastic, paper, or fiber tubes that will produce surfaces with gradual or abrupt irregularities not exceeding specified formwork surface class. Provide units with sufficient wall thickness to resist plastic concrete loads without detrimental deformation.

D. Pan-Type Forms: Glass-fiber-reinforced plastic or formed steel, stiffened to resist plastic concrete loads without detrimental deformation.

E. Void Forms: Biodegradable paper surface, treated for moisture resistance, structurally sufficient to support weight of plastic concrete and other superimposed loads.

F. Chamfer Strips: Wood, metal, PVC, or rubber strips, 3/4 by 3/4 inch (19 by 19 mm), minimum.

G. Rustication Strips: Wood, metal, PVC, or rubber strips, kerfed for ease of form removal.

H. Form-Release Agent: Commercially formulated form-release agent that will not bond with, stain, or adversely affect concrete surfaces and will not impair subsequent treatments of concrete surfaces.

1. Formulate form-release agent with rust inhibitor for steel form-facing materials.

I. Form Ties: Factory-fabricated, removable or snap-off metal or glass-fiber-reinforced plastic form ties designed to resist lateral pressure of fresh concrete on forms and to prevent spalling of concrete on removal.

1. Furnish units that will leave no corrodible metal closer than 1 inch (25 mm) to the plane of exposed concrete surface.
2. Furnish ties that, when removed, will leave holes no larger than 1 inch (25 mm) in diameter in concrete surface.
3. Furnish ties with integral water-barrier plates to walls indicated to receive dampproofing or waterproofing.

2.2 STEEL REINFORCEMENT

A. Recycled Content of Steel Products: Postconsumer recycled content plus one-half of preconsumer recycled content not less than 25 percent.

B. Reinforcing Bars: ASTM A 615/A 615M, Grade 60 (Grade 420), deformed.

C. Steel Bar Mats: ASTM A 184/A 184M, fabricated from ASTM A 615/A 615M, Grade 60 (Grade 420) deformed bars, assembled with clips.

D. Plain-Steel Wire: ASTM A 82/A 82M, as drawn or galvanized.

E. Deformed-Steel Wire: ASTM A 496/A 496M.

F. Plain-Steel Welded Wire Reinforcement: ASTM A 185/A 185M, plain, fabricated from as-drawn steel wire into flat sheets.

G. Deformed-Steel Welded Wire Reinforcement: ASTM A 497/A 497M, flat sheet.

2.3 REINFORCEMENT ACCESSORIES

A. Bar Supports: Bolsters, chairs, spacers, and other devices for spacing, supporting, and fastening reinforcing bars and welded wire reinforcement in place. Manufacture bar supports from steel wire, plastic, or precast concrete according to CRSI's "Manual of Standard Practice," of greater compressive strength than concrete and as follows:

1. For concrete surfaces exposed to view where legs of wire bar supports contact forms, use CRSI Class 1 plastic-protected steel wire or CRSI Class 2 stainless-steel bar supports.
2. For epoxy-coated reinforcement, use epoxy-coated or other dielectric-polymer-coated wire bar supports.
3. For zinc-coated reinforcement, use galvanized wire or dielectric-polymer-coated wire bar supports.

2.4 CONCRETE MATERIALS

A. Cementitious Material: Use the following cementitious materials, of the same type, brand, and source, throughout Project:

1. Portland Cement: ASTM C 150, Type I/II gray. Supplement with the following:

a. Fly Ash: ASTM C 618, Class F or C.
b. Ground Granulated Blast-Furnace Slag: ASTM C 989, Grade 100 or 120.

B. Normal-Weight Aggregates: ASTM C 33, Class 3M coarse aggregate or better, graded. Provide aggregates from a single source with documented service record data of at least 10 years' satisfactory service in similar applications and service conditions using similar aggregates and cementitious materials.

1. Maximum Coarse-Aggregate Size: 1 inch (25 mm) nominal.
2. Fine Aggregate: Free of materials with deleterious reactivity to alkali in cement.

C. Water: ASTM C 94/C 94M and potable.

2.5 ADMIXTURES

A. Air-Entraining Admixture: ASTM C 260.

B. Chemical Admixtures: Provide admixtures certified by manufacturer to be compatible with other admixtures and that will not contribute water-soluble chloride ions exceeding those permitted in hardened concrete. Do not use calcium chloride or admixtures containing calcium chloride.

1. Water-Reducing Admixture: ASTM C 494/C 494M, Type A.
2. Retarding Admixture: ASTM C 494/C 494M, Type B.
3. Water-Reducing and Retarding Admixture: ASTM C 494/C 494M, Type D.
4. High-Range, Water-Reducing Admixture: ASTM C 494/C 494M, Type F.
5. High-Range, Water-Reducing and Retarding Admixture: ASTM C 494/C 494M, Type G.
6. Plasticizing and Retarding Admixture: ASTM C 1017/C 1017M, Type II.

2.6 VAPOR RETARDERS

A. Sheet Vapor Retarder: ASTM E 1745, Class A. Include manufacturer's recommended adhesive or pressure-sensitive tape.

1. Products: Subject to compliance with requirements, available products that may be incorporated into the Work include, but are not limited to, the following:

a. Carlisle Coatings & Waterproofing, Inc.; Blackline 400.
b. Fortifiber Building Systems Group; Moistop Ultra.
c. Grace Construction Products, W. R. Grace & Co.; Florprufe 120.
d. Insulation Solutions, Inc.; Viper VaporCheck.
e. Meadows, W. R., Inc.; Perminator.
f. Raven Industries Inc.; Vapor Block.
g. Reef Industries, Inc.; Griffolyn.
h. Stego Industries, LLC; Stego Wrap.

2.7 CURING MATERIALS

A. Evaporation Retarder: Waterborne, monomolecular film forming, manufactured for application to fresh concrete.

1. Products: Subject to compliance with requirements, available products that may be incorporated into the Work include, but are not limited to, the following:

a. Axim Italcementi Group, Inc.; CATEXOL CimFilm.
b. BASF Construction Chemicals - Building Systems; Confilm.
c. ChemMasters; SprayFilm.
d. Conspec by Dayton Superior; Aquafilm.
e. Dayton Superior Corporation; Sure Film (J-74).
f. Edoco by Dayton Superior; BurkeFilm.
g. Euclid Chemical Company (The), an RPM company; Eucobar.
h. Kaufman Products, Inc.; Vapor-Aid.
i. Lambert Corporation; LAMBCO Skin.
j. L&M Construction Chemicals, Inc.; E-CON.
k. Meadows, W. R., Inc.; EVAPRE.
l. Metalcrete Industries; Waterhold.
m. Nox-Crete Products Group; MONOFILM.
n. Sika Corporation; SikaFilm.
o. SpecChem, LLC; Spec Film.
p. Symons by Dayton Superior; Finishing Aid.
q. TK Products, Division of Sierra Corporation; TK-2120 TRI-FILM.
r. Unitex; PRO-FILM.
s. Vexcon Chemicals, Inc.; Certi-Vex Envio Set.

B. Absorptive Cover: AASHTO M 182, Class 2, burlap cloth made from jute or kenaf, weighing approximately 9 oz./sq. yd. (305 g/sq. m) when dry.

C. Moisture-Retaining Cover: ASTM C 171, polyethylene film or white burlap-polyethylene sheet.

D. Water: Potable.

E. Clear, Waterborne, Membrane-Forming Curing Compound: ASTM C 309, Type 1, Class B, dissipating.

1. Products: Subject to compliance with requirements, available products that may be incorporated into the Work include, but are not limited to, the following:

   a. Anti-Hydro International, Inc.; AH Curing Compound #2 DR WB.
   b. BASF Construction Chemicals - Building Systems; Kure 200.
   c. ChemMasters; Safe-Cure Clear.
   d. Conspec by Dayton Superior; W.B. Resin Cure.
   e. Dayton Superior Corporation; Day-Chem Rez Cure (J-11-W).
   f. Edoco by Dayton Superior; Res X Cure WB.
   g. Euclid Chemical Company (The), an RPM company; Kurez W VOX; TAMMSCURE WB 30C.
   h. Kaufman Products, Inc.; Thinfilm 420.
   i. Lambert Corporation; AQUA KURE - CLEAR.
   j. L&M Construction Chemicals, Inc.; L&M Cure R.
   k. Meadows, W. R., Inc.; 1100-CLEAR.
   l. Nox-Crete Products Group; Resin Cure E.
   m. Right Pointe; Clear Water Resin.
   n. SpecChem, LLC; Spec Rez Clear.
   o. Symons by Dayton Superior; Resi-Chem Clear.
   p. TK Products, Division of Sierra Corporation; TK-2519 DC WB.
   q. Vexcon Chemicals, Inc.; Certi-Vex Enviocure 100.

F. Clear, Waterborne, Membrane-Forming Curing Compound: ASTM C 309, Type 1, Class B, nondissipating, certified by curing compound manufacturer to not interfere with bonding of floor covering.

1. Products: Subject to compliance with requirements, available products that may be incorporated into the Work include, but are not limited to, the following:

   a. Anti-Hydro International, Inc.; AH Clear Cure WB.
   b. BASF Construction Chemicals - Building Systems; Kure-N-Seal WB.
   c. ChemMasters; Safe-Cure & Seal 20.
   d. Conspec by Dayton Superior; Cure and Seal WB.
   e. Cresset Chemical Company; Crete-Trete 309-VOC Cure & Seal.
   f. Dayton Superior Corporation; Safe Cure and Seal (J-18).
   g. Edoco by Dayton Superior; Spartan Cote WB II.
   h. Euclid Chemical Company (The), an RPM company; Aqua Cure VOX; Clearseal WB 150.
   i. Kaufman Products, Inc.; Cure & Seal 309 Emulsion.
   j. Lambert Corporation; Glazecote Sealer-20.
   k. L&M Construction Chemicals, Inc.; Dress & Seal WB.
   l. Meadows, W. R., Inc.; Vocomp-20.
   m. Metalcrete Industries; Metcure.
   n. Nox-Crete Products Group; Cure & Seal 150E.
   o. Symons by Dayton Superior; Cure & Seal 18 Percent E.
   p. TK Products, Division of Sierra Corporation; TK-2519 WB.
   q. Vexcon Chemicals, Inc.; Starseal 309.

G. Clear, Waterborne, Membrane-Forming Curing Compound: ASTM C 309, Type 1, Class B, 18 to 25 percent solids, nondissipating, certified by curing compound manufacturer to not interfere with bonding of floor covering.

1. Products: Subject to compliance with requirements, available products that may be incorporated into the Work include, but are not limited to, the following:

   a. BASF Construction Chemicals - Building Systems; Kure-N-Seal W.
   b. ChemMasters; Safe-Cure Clear.

c. Conspec by Dayton Superior; High Seal.
d. Dayton Superior Corporation; Safe Cure and Seal (J-19).
e. Edoco by Dayton Superior; Spartan Cote WB II 20 Percent.
f. Euclid Chemical Company (The), an RPM company; Diamond Clear VOX; Clearseal WB STD.
g. Kaufman Products, Inc.; SureCure Emulsion.
h. Lambert Corporation; Glazecote Sealer-20.
i. L&M Construction Chemicals, Inc.; Dress & Seal WB.
j. Meadows, W. R., Inc.; Vocomp-20.
k. Metalcrete Industries; Metcure 0800.
l. Nox-Crete Products Group; Cure & Seal 200E.
m. Symons by Dayton Superior; Cure & Seal 18 Percent E.
n. Vexcon Chemicals, Inc.; Starseal 0800.

H. Clear, Solvent-Borne, Membrane-Forming Curing and Sealing Compound: ASTM C 1315, Type 1, Class A.

1. Products: Subject to compliance with requirements, available products that may be incorporated into the Work include, but are not limited to, the following:

a. BASF Construction Chemicals - Building Systems; Kure-N-Seal 25 LV.
b. ChemMasters; Spray-Cure & Seal Plus.
c. Conspec by Dayton Superior; Sealcure 1315.
d. Dayton Superior Corporation; Day-Chem Cure and Seal (J-22UV).
e. Edoco by Dayton Superior; Cureseal 1315.
f. Euclid Chemical Company (The), an RPM company; Super Diamond Clear; LusterSeal 300.
g. Kaufman Products, Inc.; Sure Cure 25.
h. Lambert Corporation; UV Super Seal.
i. L&M Construction Chemicals, Inc.; Lumiseal Plus.
j. Meadows, W. R., Inc.; CS-309/30.
k. Metalcrete Industries; Seal N Kure 30.
l. Right Pointe; Right Sheen 30.
m. Vexcon Chemicals, Inc.; Certi-Vex AC 1315.

2. VOC Content: Curing and sealing compounds shall have a VOC content of 200 g/L or less when calculated according to 40 CFR 59, Subpart D (EPA Method 24).

I. Clear, Waterborne, Membrane-Forming Curing and Sealing Compound: ASTM C 1315, Type 1, Class A.

1. Products: Subject to compliance with requirements, available products that may be incorporated into the Work include, but are not limited to, the following:

a. BASF Construction Chemicals - Building Systems; Kure 1315.
b. ChemMasters; Polyseal WB.
c. Conspec by Dayton Superior; Sealcure 1315 WB.
d. Edoco by Dayton Superior; Cureseal 1315 WB.
e. Euclid Chemical Company (The), an RPM company; Super Diamond Clear VOX; LusterSeal WB 300.
f. Kaufman Products, Inc.; Sure Cure 25 Emulsion.
g. Lambert Corporation; UV Safe Seal.
h. L&M Construction Chemicals, Inc.; Lumiseal WB Plus.
i. Meadows, W. R., Inc.; Vocomp-30.
j. Metalcrete Industries; Metcure 30.
k. Right Pointe; Right Sheen WB30.

l. Symons by Dayton Superior; Cure & Seal 31 Percent E.
m. Vexcon Chemicals, Inc.; Vexcon Starseal 1315.

2. VOC Content: Curing and sealing compounds shall have a VOC content of 200 g/L or less when calculated according to 40 CFR 59, Subpart D (EPA Method 24).

2.8 RELATED MATERIALS

A. Expansion- and Isolation-Joint-Filler Strips: ASTM D 1751, asphalt-saturated cellulosic fiber or ASTM D 1752, cork or self-expanding cork.

B. Semirigid Joint Filler: Two-component, semirigid, 100 percent solids, epoxy resin with a Type A shore durometer hardness of 80 or aromatic polyurea with a Type A shore durometer hardness range of 90 to 95 per ASTM D 2240.

C. Bonding Agent: ASTM C 1059/C 1059M, Type II, non-redispersible, acrylic emulsion or styrene butadiene.

D. Epoxy Bonding Adhesive: ASTM C 881, two-component epoxy resin, capable of humid curing and bonding to damp surfaces, of class suitable for application temperature and of grade to suit requirements, and as follows:

1. Types IV and V, load bearing, for bonding hardened or freshly mixed concrete to hardened concrete.

E. Reglets: Fabricate reglets of not less than 0.022-inch- (0.55-mm-) thick, galvanized-steel sheet. Temporarily fill or cover face opening of reglet to prevent intrusion of concrete or debris.

F. Dovetail Anchor Slots: Hot-dip galvanized-steel sheet, not less than 0.034 inch (0.85 mm) thick, with bent tab anchors. Temporarily fill or cover face opening of slots to prevent intrusion of concrete or debris.

2.9 REPAIR MATERIALS

A. Repair Underlayment: Cement-based, polymer-modified, self-leveling product that can be applied in thicknesses from 1/8 inch (3.2 mm) and that can be feathered at edges to match adjacent floor elevations.

1. Cement Binder: ASTM C 150, portland cement or hydraulic or blended hydraulic cement as defined in ASTM C 219.
2. Primer: Product of underlayment manufacturer recommended for substrate, conditions, and application.
3. Aggregate: Well-graded, washed gravel, 1/8 to 1/4 inch (3.2 to 6 mm) or coarse sand as recommended by underlayment manufacturer.
4. Compressive Strength: Not less than 4100 psi (29 MPa) at 28 days when tested according to ASTM C 109/C 109M.

B. Repair Overlayment: Cement-based, polymer-modified, self-leveling product that can be applied in thicknesses from 1/4 inch (6.4 mm) and that can be filled in over a scarified surface to match adjacent floor elevations.

1. Cement Binder: ASTM C 150, portland cement or hydraulic or blended hydraulic cement as defined in ASTM C 219.
2. Primer: Product of topping manufacturer recommended for substrate, conditions, and application.

3. Aggregate: Well-graded, washed gravel, 1/8 to 1/4 inch (3.2 to 6 mm) or coarse sand as recommended by topping manufacturer.
4. Compressive Strength: Not less than 5000 psi (34.5 MPa) at 28 days when tested according to ASTM C 109/C 109M.

2.10 CONCRETE MIXTURES, GENERAL

A. Prepare design mixtures for each type and strength of concrete, proportioned on the basis of laboratory trial mixture or field test data, or both, according to ACI 301.

1. Use a qualified independent testing agency for preparing and reporting proposed mixture designs based on laboratory trial mixtures.

B. Limit water-soluble, chloride-ion content in hardened concrete to 0.30 percent by weight of cement.

C. Admixtures: Use admixtures according to manufacturer's written instructions.

1. Use water-reducing, high-range water-reducing or plasticizing admixture in concrete, as required, for placement and workability.
2. Use water-reducing and retarding admixture when required by high temperatures, low humidity, or other adverse placement conditions.
3. Use water-reducing admixture in pumped concrete, concrete for heavy-use industrial slabs and parking structure slabs, concrete required to be watertight, and concrete with a water-cementitious materials ratio below 0.50.

D. Color Pigment: Add color pigment to concrete mixture according to manufacturer's written instructions and to result in hardened concrete color consistent with approved mockup.

2.11 CONCRETE MIXTURES FOR BUILDING ELEMENTS

A. Footings: Proportion normal-weight concrete mixture as follows:

1. Minimum Compressive Strength: 3000 psi (20.7 MPa) at 28 days.
2. Maximum Water-Cementitious Materials Ratio: 0.50.
3. Slump Limit: 4 inches (100 mm) for concrete with verified slump of 2 to 4 inches (50 to 100 mm) before adding high-range water-reducing admixture or plasticizing admixture, plus or minus 1 inch (25 mm).
4. Air Content: 5.5 percent, plus or minus 1.5 percent at point of delivery for 1-1/2-inch (38-mm) nominal maximum aggregate size.

B. Foundation Walls and Piers: Proportion normal-weight concrete mixture as follows:

1. Minimum Compressive Strength: 4000 psi (27.6 MPa) at 28 days.
2. Maximum Water-Cementitious Materials Ratio: 0.45.
3. Slump Limit: 4 inches (100 mm) for concrete with verified slump of 2 to 4 inches (50 to 100 mm) before adding high-range water-reducing admixture or plasticizing admixture, plus or minus 1 inch (25 mm).
4. Air Content: 5.5 percent, plus or minus 1.5 percent at point of delivery for 1-1/2-inch (38-mm) nominal maximum aggregate size.

C. Slabs-on-Grade: Proportion normal-weight concrete mixture as follows:

1. Minimum Compressive Strength: 5000 psi exterior and 4000 psi (27.6 MPa) interior at 28 days.

2. Maximum Water-Cementitious Materials Ratio: 0.45.
3. Slump Limit: 4 inches (100 mm),plus or minus 1 inch (25 mm).
4. Air Content: 5.5 percent, plus or minus 1.5 percent at point of delivery for 1-1/2-inch (38-mm) nominal maximum aggregate size.
5. Air Content: Do not allow air content of trowel-finished floors to exceed 3 percent.

D. Suspended Slabs: Proportion normal-weight concrete mixture as follows:

1. Minimum Compressive Strength: 4000 psi (27.6 MPa) at 28 days.
2. Minimum Cementitious Materials Content: 520 lb/cu. yd. (309 kg/cu. m).
3. Slump Limit: 4 inches (100 mm), plus or minus 1 inch (25 mm).
4. Air Content: 5.5 percent, plus or minus 1.5 percent at point of delivery for 1-1/2-inch (38-mm) nominal maximum aggregate size.
5. Air Content: Do not allow air content of trowel-finished floors to exceed 3 percent.

2.12 FABRICATING REINFORCEMENT

A. Fabricate steel reinforcement according to CRSI's "Manual of Standard Practice."

2.13 CONCRETE MIXING

A. Ready-Mixed Concrete: Measure, batch, mix, and deliver concrete according to ASTM C 94/C 94M and ASTM C 1116/C 1116M, and furnish batch ticket information.

1. When air temperature is between 85 and 90 deg F (30 and 32 deg C), reduce mixing and delivery time from 1-1/2 hours to 75 minutes; when air temperature is above 90 deg F (32 deg C), reduce mixing and delivery time to 60 minutes.

B. Project-Site Mixing: Measure, batch, and mix concrete materials and concrete according to ASTM C 94/C 94M. Mix concrete materials in appropriate drum-type batch machine mixer.

1. For mixer capacity of 1 cu. yd. (0.76 cu. m) or smaller, continue mixing at least 1-1/2 minutes, but not more than 5 minutes after ingredients are in mixer, before any part of batch is released.
2. For mixer capacity larger than 1 cu. yd. (0.76 cu. m), increase mixing time by 15 seconds for each additional 1 cu. yd. (0.76 cu. m).
3. Provide batch ticket for each batch discharged and used in the Work, indicating Project identification name and number, date, mixture type, mixture time, quantity, and amount of water added. Record approximate location of final deposit in structure.

PART 3 - EXECUTION

3.1 FORMWORK

A. Design, erect, shore, brace, and maintain formwork, according to ACI 301, to support vertical, lateral, static, and dynamic loads, and construction loads that might be applied, until structure can support such loads.

B. Construct formwork so concrete members and structures are of size, shape, alignment, elevation, and position indicated, within tolerance limits of ACI 117.

C. Limit concrete surface irregularities, designated by ACI 347 as abrupt or gradual, as follows:

1. Class A, 1/8 inch (3.2 mm) for smooth-formed finished surfaces.
2. Class B, 1/4 inch (6 mm) for rough-formed finished surfaces.

D. Construct forms tight enough to prevent loss of concrete mortar.

E. Fabricate forms for easy removal without hammering or prying against concrete surfaces. Provide crush or wrecking plates where stripping may damage cast concrete surfaces. Provide top forms for inclined surfaces steeper than 1.5 horizontal to 1 vertical.

1. Install keyways, reglets, recesses, and the like, for easy removal.
2. Do not use rust-stained steel form-facing material.

F. Set edge forms, bulkheads, and intermediate screed strips for slabs to achieve required elevations and slopes in finished concrete surfaces. Provide and secure units to support screed strips; use strike-off templates or compacting-type screeds.

G. Provide temporary openings for cleanouts and inspection ports where interior area of formwork is inaccessible. Close openings with panels tightly fitted to forms and securely braced to prevent loss of concrete mortar. Locate temporary openings in forms at inconspicuous locations.

H. Chamfer exterior corners and edges of permanently exposed concrete.

I. Form openings, chases, offsets, sinkages, keyways, reglets, blocking, screeds, and bulkheads required in the Work. Determine sizes and locations from trades providing such items.

J. Clean forms and adjacent surfaces to receive concrete. Remove chips, wood, sawdust, dirt, and other debris just before placing concrete.

K. Retighten forms and bracing before placing concrete, as required, to prevent mortar leaks and maintain proper alignment.

L. Coat contact surfaces of forms with form-release agent, according to manufacturer's written instructions, before placing reinforcement.

3.2 EMBEDDED ITEMS

A. Place and secure anchorage devices and other embedded items required for adjoining work that is attached to or supported by cast-in-place concrete. Use setting drawings, templates, diagrams, instructions, and directions furnished with items to be embedded.

1. Install anchor rods, accurately located, to elevations required and complying with tolerances in Section 7.5 of AISC's "Code of Standard Practice for Steel Buildings and Bridges."
2. Install reglets to receive waterproofing and to receive through-wall flashings in outer face of concrete frame at exterior walls, where flashing is shown at lintels, shelf angles, and other conditions.
3. Install dovetail anchor slots in concrete structures as indicated.

3.3 REMOVING AND REUSING FORMS

A. General: Formwork for sides of beams, walls, columns, and similar parts of the Work that does not support weight of concrete may be removed after cumulatively curing at not less than 50 deg F (10 deg C) for 24 hours after placing concrete. Concrete has to be hard enough to not be damaged by form-removal operations and curing and protection operations need to be maintained.

1. Leave formwork for beam soffits, joists, slabs, and other structural elements that supports weight of concrete in place until concrete has achieved at least 70 percent of its 28-day design compressive strength.
2. Remove forms only if shores have been arranged to permit removal of forms without loosening or disturbing shores.

B. Clean and repair surfaces of forms to be reused in the Work. Split, frayed, delaminated, or otherwise damaged form-facing material will not be acceptable for exposed surfaces. Apply new form-release agent.

C. When forms are reused, clean surfaces, remove fins and laitance, and tighten to close joints. Align and secure joints to avoid offsets. Do not use patched forms for exposed concrete surfaces unless approved by Architect.

3.4 SHORES AND RESHORES

A. Comply with ACI 318 (ACI 318M) and ACI 301 for design, installation, and removal of shoring and reshoring.

1. Do not remove shoring or reshoring until measurement of slab tolerances is complete.

B. In multistory construction, extend shoring or reshoring over a sufficient number of stories to distribute loads in such a manner that no floor or member will be excessively loaded or will induce tensile stress in concrete members without sufficient steel reinforcement.

C. Plan sequence of removal of shores and reshore to avoid damage to concrete. Locate and provide adequate reshoring to support construction without excessive stress or deflection.

3.5 VAPOR RETARDERS

A. Sheet Vapor Retarders: Place, protect, and repair sheet vapor retarder according to ASTM E 1643 and manufacturer's written instructions.

1. Lap joints 6 inches (150 mm) and seal with manufacturer's recommended tape.

B. Bituminous Vapor Retarders: Place, protect, and repair bituminous vapor retarder according to manufacturer's written instructions.

3.6 STEEL REINFORCEMENT

A. General: Comply with CRSI's "Manual of Standard Practice" for placing reinforcement.

1. Do not cut or puncture vapor retarder. Repair damage and reseal vapor retarder before placing concrete.

B. Clean reinforcement of loose rust and mill scale, earth, ice, and other foreign materials that would reduce bond to concrete.

C. Accurately position, support, and secure reinforcement against displacement. Locate and support reinforcement with bar supports to maintain minimum concrete cover. Do not tack weld crossing reinforcing bars.

1. Weld reinforcing bars according to AWS D1.4/D 1.4M, where indicated.

D. Set wire ties with ends directed into concrete, not toward exposed concrete surfaces.

E. Install welded wire reinforcement in longest practicable lengths on bar supports spaced to minimize sagging. Lap edges and ends of adjoining sheets at least one mesh spacing. Offset laps of adjoining sheet widths to prevent continuous laps in either direction. Lace overlaps with wire.

F. Epoxy-Coated Reinforcement: Repair cut and damaged epoxy coatings with epoxy repair coating according to ASTM D 3963/D 3963M. Use epoxy-coated steel wire ties to fasten epoxy-coated steel reinforcement.

G. Zinc-Coated Reinforcement: Repair cut and damaged zinc coatings with zinc repair material according to ASTM A 780. Use galvanized steel wire ties to fasten zinc-coated steel reinforcement.

3.7 JOINTS

A. General: Construct joints true to line with faces perpendicular to surface plane of concrete.

B. Construction Joints: Install so strength and appearance of concrete are not impaired, at locations indicated or as approved by Architect.

1. Place joints perpendicular to main reinforcement. Continue reinforcement across construction joints unless otherwise indicated. Do not continue reinforcement through sides of strip placements of floors and slabs.
2. Form keyed joints as indicated. Embed keys at least 1-1/2 inches (38 mm) into concrete.
3. Locate joints for beams, slabs, joists, and girders in the middle third of spans. Offset joints in girders a minimum distance of twice the beam width from a beam-girder intersection.
4. Locate horizontal joints in walls and columns at underside of floors, slabs, beams, and girders and at the top of footings or floor slabs.
5. Space vertical joints in walls as indicated. Locate joints beside piers integral with walls, near corners, and in concealed locations where possible.
6. Use a bonding agent at locations where fresh concrete is placed against hardened or partially hardened concrete surfaces.
7. Use epoxy-bonding adhesive at locations where fresh concrete is placed against hardened or partially hardened concrete surfaces.

C. Contraction Joints in Slabs-on-Grade: Form weakened-plane contraction joints, sectioning concrete into areas as indicated. Construct contraction joints for a depth equal to at least one-fourth of concrete thickness as follows:

1. Grooved Joints: Form contraction joints after initial floating by grooving and finishing each edge of joint to a radius of 1/8 inch (3.2 mm). Repeat grooving of contraction joints after applying surface finishes. Eliminate groover tool marks on concrete surfaces.
2. Sawed Joints: Form contraction joints with power saws equipped with shatterproof abrasive or diamond-rimmed blades. Cut 1/8-inch- (3.2-mm-) wide joints into concrete when cutting action will not tear, abrade, or otherwise damage surface and before concrete develops random contraction cracks.

D. Isolation Joints in Slabs-on-Grade: After removing formwork, install joint-filler strips at slab junctions with vertical surfaces, such as column pedestals, foundation walls, grade beams, and other locations, as indicated.

1. Extend joint-filler strips full width and depth of joint, terminating flush with finished concrete surface unless otherwise indicated.
2. Terminate full-width joint-filler strips not less than 1/2 inch (13 mm) or more than 1 inch (25 mm) below finished concrete surface where joint sealants, specified in Section 079200 "Joint Sealants," are indicated.
3. Install joint-filler strips in lengths as long as practicable. Where more than one length is required, lace or clip sections together.

E. Doweled Joints: Install dowel bars and support assemblies at joints where indicated. Lubricate or asphalt coat one-half of dowel length to prevent concrete bonding to one side of joint.

3.8 CONCRETE PLACEMENT

A. Before placing concrete, verify that installation of formwork, reinforcement, and embedded items is complete and that required inspections have been performed.

B. Do not add water to concrete during delivery, at Project site, or during placement unless approved by Architect.

C. Before test sampling and placing concrete, water may be added at Project site, subject to limitations of ACI 301.

1. Do not add water to concrete after adding high-range water-reducing admixtures to mixture.

D. Deposit concrete continuously in one layer or in horizontal layers of such thickness that no new concrete will be placed on concrete that has hardened enough to cause seams or planes of weakness. If a section cannot be placed continuously, provide construction joints as indicated. Deposit concrete to avoid segregation.

1. Deposit concrete in horizontal layers of depth to not exceed formwork design pressures and in a manner to avoid inclined construction joints.
2. Consolidate placed concrete with mechanical vibrating equipment according to ACI 301.
3. Do not use vibrators to transport concrete inside forms. Insert and withdraw vibrators vertically at uniformly spaced locations to rapidly penetrate placed layer and at least 6 inches (150 mm) into preceding layer. Do not insert vibrators into lower layers of concrete that have begun to lose plasticity. At each insertion, limit duration of vibration to time necessary to consolidate concrete and complete embedment of reinforcement and other embedded items without causing mixture constituents to segregate.

E. Deposit and consolidate concrete for floors and slabs in a continuous operation, within limits of construction joints, until placement of a panel or section is complete.

1. Consolidate concrete during placement operations so concrete is thoroughly worked around reinforcement and other embedded items and into corners.
2. Maintain reinforcement in position on chairs during concrete placement.
3. Screed slab surfaces with a straightedge and strike off to correct elevations.
4. Slope surfaces uniformly to drains where required.
5. Begin initial floating using bull floats or darbies to form a uniform and open-textured surface plane, before excess bleedwater appears on the surface. Do not further disturb slab surfaces before starting finishing operations.

F. Cold-Weather Placement: Comply with ACI 306.1 and as follows. Protect concrete work from physical damage or reduced strength that could be caused by frost, freezing actions, or low temperatures.

1. When average high and low temperature is expected to fall below 40 deg F (4.4 deg C) for three successive days, maintain delivered concrete mixture temperature within the temperature range required by ACI 301.
2. Do not use frozen materials or materials containing ice or snow. Do not place concrete on frozen subgrade or on subgrade containing frozen materials.
3. Do not use calcium chloride, salt, or other materials containing antifreeze agents or chemical accelerators unless otherwise specified and approved in mixture designs.

G. Hot-Weather Placement: Comply with ACI 301 and as follows:

1. Maintain concrete temperature below 90 deg F (32 deg C) at time of placement. Chilled mixing water or chopped ice may be used to control temperature, provided water equivalent of ice is calculated to total amount of mixing water. Using liquid nitrogen to cool concrete is Contractor's option.
2. Fog-spray forms, steel reinforcement, and subgrade just before placing concrete. Keep subgrade uniformly moist without standing water, soft spots, or dry areas.

3.9 FINISHING FORMED SURFACES

A. Rough-Formed Finish: As-cast concrete texture imparted by form-facing material with tie holes and defects repaired and patched. Remove fins and other projections that exceed specified limits on formed-surface irregularities.

1. Apply to concrete surfaces not exposed to public view.

B. Smooth-Formed Finish: As-cast concrete texture imparted by form-facing material, arranged in an orderly and symmetrical manner with a minimum of seams. Repair and patch tie holes and defects. Remove fins and other projections that exceed specified limits on formed-surface irregularities.

1. Apply to concrete surfaces exposed to public view, to receive a rubbed finish, to be covered with a coating or covering material applied directly to concrete.

C. Rubbed Finish: Apply the following to smooth-formed finished as-cast concrete where indicated:

1. Smooth-Rubbed Finish: Not later than one day after form removal, moisten concrete surfaces and rub with carborundum brick or another abrasive until producing a uniform color and texture. Do not apply cement grout other than that created by the rubbing process.
2. Grout-Cleaned Finish: Wet concrete surfaces and apply grout of a consistency of thick paint to coat surfaces and fill small holes. Mix one part portland cement to one and one-half parts fine sand with a 1:1 mixture of bonding admixture and water. Add white portland cement in amounts determined by trial patches so color of dry grout will match adjacent surfaces. Scrub grout into voids and remove excess grout. When grout whitens, rub surface with clean burlap and keep surface damp by fog spray for at least 36 hours.
3. Cork-Floated Finish: Wet concrete surfaces and apply a stiff grout. Mix one part portland cement and one part fine sand with a 1:1 mixture of bonding agent and water. Add white portland cement in amounts determined by trial patches so color of dry grout will match adjacent surfaces. Compress grout into voids by grinding surface. In a swirling motion, finish surface with a cork float.

D. Related Unformed Surfaces: At tops of walls, horizontal offsets, and similar unformed surfaces adjacent to formed surfaces, strike off smooth and finish with a texture matching adjacent formed surfaces. Continue final surface treatment of formed surfaces uniformly across adjacent unformed surfaces unless otherwise indicated.

3.10 FINISHING FLOORS AND SLABS

A. General: Comply with ACI 302.1R recommendations for screeding, restraightening, and finishing operations for concrete surfaces. Do not wet concrete surfaces.

B. Scratch Finish: While still plastic, texture concrete surface that has been screeded and bull-floated or darbied. Use stiff brushes, brooms, or rakes to produce a profile amplitude of 1/4 inch (6 mm) in one direction.

1. Apply scratch finish to surfaces indicated and to receive concrete floor toppings and to receive mortar setting beds for bonded cementitious floor finishes.

C. Float Finish: Consolidate surface with power-driven floats or by hand floating if area is small or inaccessible to power driven floats. Restraighten, cut down high spots, and fill low spots. Repeat float passes and restraightening until surface is left with a uniform, smooth, granular texture.

1. Apply float finish to surfaces indicated to receive trowel finish and to be covered with fluid-applied or sheet waterproofing, built-up or membrane roofing, or sand-bed terrazzo.

D. Trowel Finish: After applying float finish, apply first troweling and consolidate concrete by hand or power-driven trowel. Continue troweling passes and restraighten until surface is free of trowel marks and uniform in texture and appearance. Grind smooth any surface defects that would telegraph through applied coatings or floor coverings.

1. Apply a trowel finish to surfaces indicated and exposed to view or to be covered with resilient flooring, carpet, ceramic or quarry tile set over a cleavage membrane, paint, or another thin-film-finish coating system.
2. Finish surfaces to the following tolerances, according to ASTM E 1155 (ASTM E 1155M), for a randomly trafficked floor surface:

   a. Specified overall values of flatness, F(F) 35; and of levelness, F(L) 25; with minimum local values of flatness, F(F) 24; and of levelness, F(L) 17; for slabs-on-grade.
   b. Specified overall values of flatness, F(F) 30; and of levelness, F(L) 20; with minimum local values of flatness, F(F) 24; and of levelness, F(L) 15; for suspended slabs.

E. Trowel and Fine-Broom Finish: Apply a first trowel finish to surfaces indicated and to where ceramic or quarry tile is to be installed by either thickset or thin-set method. While concrete is still plastic, slightly scarify surface with a fine broom.

1. Comply with flatness and levelness tolerances for trowel-finished floor surfaces.

F. Broom Finish: Apply a broom finish to exterior concrete platforms, steps, ramps, and elsewhere as indicated.

1. Immediately after float finishing, slightly roughen trafficked surface by brooming with fiber-bristle broom perpendicular to main traffic route. Coordinate required final finish with Architect before application.

3.11 MISCELLANEOUS CONCRETE ITEMS

A. Filling In: Fill in holes and openings left in concrete structures after work of other trades is in place unless otherwise indicated. Mix, place, and cure concrete, as specified, to blend with in-place construction. Provide other miscellaneous concrete filling indicated or required to complete the Work.

B. Curbs: Provide monolithic finish to interior curbs by stripping forms while concrete is still green and by steel-troweling surfaces to a hard, dense finish with corners, intersections, and terminations slightly rounded.

C. Equipment Bases and Foundations:

1. Coordinate sizes and locations of concrete bases with actual equipment provided.
2. Construct concrete bases 6 inches ((150 mm) high unless otherwise indicated; and extend base not less than 6 inches (150 mm) in each direction beyond the maximum dimensions of supported equipment unless otherwise indicated or unless required for seismic anchor support.
3. Minimum Compressive Strength: 4500 psi (31 MPa) at 28 days.
4. Install dowel rods to connect concrete base to concrete floor. Unless otherwise indicated, install dowel rods on 18-inch (450-mm) centers around the full perimeter of concrete base.
5. For supported equipment, install epoxy-coated anchor bolts that extend through concrete base, and anchor into structural concrete substrate.
6. Prior to pouring concrete, place and secure anchorage devices. Use setting drawings, templates, diagrams, instructions, and directions furnished with items to be embedded.
7. Cast anchor-bolt insert into bases. Install anchor bolts to elevations required for proper attachment to supported equipment.

D. Steel Pan Stairs: Provide concrete fill for steel pan stair treads, landings, and associated items. Cast-in inserts and accessories as shown on Drawings. Screed, tamp, and trowel finish concrete surfaces.

3.12 CONCRETE PROTECTING AND CURING

A. General: Protect freshly placed concrete from premature drying and excessive cold or hot temperatures. Comply with ACI 306.1 for cold-weather protection and ACI 301 for hot-weather protection during curing.

B. Evaporation Retarder: Apply evaporation retarder to unformed concrete surfaces if hot, dry, or windy conditions cause moisture loss approaching 0.2 lb/sq. ft. x h (1 kg/sq. m x h) before and during finishing operations. Apply according to manufacturer's written instructions after placing, screeding, and bull floating or darbying concrete, but before float finishing.

C. Formed Surfaces: Cure formed concrete surfaces, including underside of beams, supported slabs, and other similar surfaces. If forms remain during curing period, moist cure after loosening forms. If removing forms before end of curing period, continue curing for the remainder of the curing period.

D. Unformed Surfaces: Begin curing immediately after finishing concrete. Cure unformed surfaces, including floors and slabs, concrete floor toppings, and other surfaces.

E. Cure concrete according to ACI 308.1, by one or a combination of the following methods:

1. Moisture Curing: Keep surfaces continuously moist for not less than seven days with the following materials:

   a. Water.
   b. Continuous water-fog spray.
   c. Absorptive cover, water saturated, and kept continuously wet. Cover concrete surfaces and edges with 12-inch (300-mm) lap over adjacent absorptive covers.

2. Moisture-Retaining-Cover Curing: Cover concrete surfaces with moisture-retaining cover for curing concrete, placed in widest practicable width, with sides and ends lapped at least 12 inches (300 mm), and sealed by waterproof tape or adhesive. Cure for not less than seven days.

Immediately repair any holes or tears during curing period using cover material and waterproof tape.

a. Moisture cure or use moisture-retaining covers to cure concrete surfaces to receive floor coverings.
b. Moisture cure or use moisture-retaining covers to cure concrete surfaces to receive penetrating liquid floor treatments.
c. Cure concrete surfaces to receive floor coverings with either a moisture-retaining cover or a curing compound that the manufacturer certifies will not interfere with bonding of floor covering used on Project.

3. Curing Compound: Apply uniformly in continuous operation by power spray or roller according to manufacturer's written instructions. Recoat areas subjected to heavy rainfall within three hours after initial application. Maintain continuity of coating and repair damage during curing period.

a. Removal: After curing period has elapsed, remove curing compound without damaging concrete surfaces by method recommended by curing compound manufacturer unless manufacturer certifies curing compound will not interfere with bonding of floor covering used on Project.

4. Curing and Sealing Compound: Apply uniformly to floors and slabs indicated in a continuous operation by power spray or roller according to manufacturer's written instructions. Recoat areas subjected to heavy rainfall within three hours after initial application. Repeat process 24 hours later and apply a second coat. Maintain continuity of coating and repair damage during curing period.

3.13 JOINT FILLING

A. Prepare, clean, and install joint filler according to manufacturer's written instructions.

1. Defer joint filling until concrete has aged at least six month(s). Do not fill joints until construction traffic has permanently ceased.

B. Remove dirt, debris, saw cuttings, curing compounds, and sealers from joints; leave contact faces of joint clean and dry.

C. Install semirigid joint filler full depth in saw-cut joints and at least 2 inches (50 mm) deep in formed joints. Overfill joint and trim joint filler flush with top of joint after hardening.

3.14 CONCRETE SURFACE REPAIRS

A. Defective Concrete: Repair and patch defective areas when approved by Architect. Remove and replace concrete that cannot be repaired and patched to Architect's approval.

B. Patching Mortar: Mix dry-pack patching mortar, consisting of one part portland cement to two and one-half parts fine aggregate passing a No. 16 (1.18-mm) sieve, using only enough water for handling and placing.

C. Repairing Formed Surfaces: Surface defects include color and texture irregularities, cracks, spalls, air bubbles, honeycombs, rock pockets, fins and other projections on the surface, and stains and other discolorations that cannot be removed by cleaning.

1. Immediately after form removal, cut out honeycombs, rock pockets, and voids more than 1/2 inch (13 mm) in any dimension to solid concrete. Limit cut depth to 3/4 inch (19 mm). Make edges of cuts perpendicular to concrete surface. Clean, dampen with water, and brush-coat holes and voids with bonding agent. Fill and compact with patching mortar before bonding agent has dried. Fill form-tie voids with patching mortar or cone plugs secured in place with bonding agent.
2. Repair defects on surfaces exposed to view by blending white portland cement and standard portland cement so that, when dry, patching mortar will match surrounding color. Patch a test area at inconspicuous locations to verify mixture and color match before proceeding with patching. Compact mortar in place and strike off slightly higher than surrounding surface.
3. Repair defects on concealed formed surfaces that affect concrete's durability and structural performance as determined by Architect.

D. Repairing Unformed Surfaces: Test unformed surfaces, such as floors and slabs, for finish and verify surface tolerances specified for each surface. Correct low and high areas. Test surfaces sloped to drain for trueness of slope and smoothness; use a sloped template.

1. Repair finished surfaces containing defects. Surface defects include spalls, popouts, honeycombs, rock pockets, crazing and cracks in excess of 0.01 inch (0.25 mm) wide or that penetrate to reinforcement or completely through unreinforced sections regardless of width, and other objectionable conditions.
2. After concrete has cured at least 14 days, correct high areas by grinding.
3. Correct localized low areas during or immediately after completing surface finishing operations by cutting out low areas and replacing with patching mortar. Finish repaired areas to blend into adjacent concrete.
4. Correct other low areas scheduled to receive floor coverings with a repair underlayment. Prepare, mix, and apply repair underlayment and primer according to manufacturer's written instructions to produce a smooth, uniform, plane, and level surface. Feather edges to match adjacent floor elevations.
5. Correct other low areas scheduled to remain exposed with a repair topping. Cut out low areas to ensure a minimum repair topping depth of 1/4 inch (6 mm) to match adjacent floor elevations. Prepare, mix, and apply repair topping and primer according to manufacturer's written instructions to produce a smooth, uniform, plane, and level surface.
6. Repair defective areas, except random cracks and single holes 1 inch (25 mm) or less in diameter, by cutting out and replacing with fresh concrete. Remove defective areas with clean, square cuts and expose steel reinforcement with at least a 3/4-inch (19-mm) clearance all around. Dampen concrete surfaces in contact with patching concrete and apply bonding agent. Mix patching concrete of same materials and mixture as original concrete except without coarse aggregate. Place, compact, and finish to blend with adjacent finished concrete. Cure in same manner as adjacent concrete.
7. Repair random cracks and single holes 1 inch (25 mm) or less in diameter with patching mortar. Groove top of cracks and cut out holes to sound concrete and clean off dust, dirt, and loose particles. Dampen cleaned concrete surfaces and apply bonding agent. Place patching mortar before bonding agent has dried. Compact patching mortar and finish to match adjacent concrete. Keep patched area continuously moist for at least 72 hours.

E. Perform structural repairs of concrete, subject to Architect's approval, using epoxy adhesive and patching mortar.

F. Repair materials and installation not specified above may be used, subject to Architect's approval.

3.15 FIELD QUALITY CONTROL

A. Testing and Inspecting: Owner will engage a special inspector and qualified testing and inspecting agency to perform field tests and inspections and prepare test reports.

B. Testing and Inspecting: Engage a qualified testing and inspecting agency to perform tests and inspections and to submit reports.

C. Inspections:

1. Steel reinforcement placement.
2. Steel reinforcement welding.
3. Headed bolts and studs.
4. Verification of use of required design mixture.
5. Concrete placement, including conveying and depositing.
6. Curing procedures and maintenance of curing temperature.
7. Verification of concrete strength before removal of shores and forms from beams and slabs.

D. Concrete Tests: Testing of composite samples of fresh concrete obtained according to ASTM C 172 shall be performed according to the following requirements:

1. Testing Frequency: Obtain one composite sample for each day's pour of each concrete mixture exceeding 5 cu. yd. (4 cu. m), but less than 25 cu. yd. (19 cu. m), plus one set for each additional 50 cu. yd. (38 cu. m) or fraction thereof.
2. Testing Frequency: Obtain at least one composite sample for each 100 cu. yd. (76 cu. m) or fraction thereof of each concrete mixture placed each day.

    a. When frequency of testing will provide fewer than five compressive-strength tests for each concrete mixture, testing shall be conducted from at least five randomly selected batches or from each batch if fewer than five are used.

3. Slump: ASTM C 143/C 143M; one test at point of placement for each composite sample, but not less than one test for each day's pour of each concrete mixture. Perform additional tests when concrete consistency appears to change.
4. Air Content: ASTM C 231, pressure method, for normal-weight concrete; ASTM C 173/C 173M, volumetric method, for structural lightweight concrete; one test for each composite sample, but not less than one test for each day's pour of each concrete mixture.
5. Concrete Temperature: ASTM C 1064/C 1064M; one test hourly when air temperature is 40 deg F (4.4 deg C) and below and when 80 deg F (27 deg C) and above, and one test for each composite sample.
6. Unit Weight: ASTM C 567, fresh unit weight of structural lightweight concrete; one test for each composite sample, but not less than one test for each day's pour of each concrete mixture.
7. Compression Test Specimens: ASTM C 31/C 31M.

    a. Cast and laboratory cure two sets of two standard cylinder specimens for each composite sample.
    b. Cast and field cure two sets of two standard cylinder specimens for each composite sample.

8. Compressive-Strength Tests: ASTM C 39/C 39M; test one set of two laboratory-cured specimens at 7 days and one set of two specimens at 28 days.

    a. Test one set of two field-cured specimens at 7 days and one set of two specimens at 28 days.
    b. A compressive-strength test shall be the average compressive strength from a set of two specimens obtained from same composite sample and tested at age indicated.

9. When strength of field-cured cylinders is less than 85 percent of companion laboratory-cured cylinders, Contractor shall evaluate operations and provide corrective procedures for protecting and curing in-place concrete.

10. Strength of each concrete mixture will be satisfactory if every average of any three consecutive compressive-strength tests equals or exceeds specified compressive strength and no compressive-strength test value falls below specified compressive strength by more than 500 psi (3.4 MPa).
11. Test results shall be reported in writing to Architect, concrete manufacturer, and Contractor within 48 hours of testing. Reports of compressive-strength tests shall contain Project identification name and number, date of concrete placement, name of concrete testing and inspecting agency, location of concrete batch in Work, design compressive strength at 28 days, concrete mixture proportions and materials, compressive breaking strength, and type of break for both 7- and 28-day tests.
12. Nondestructive Testing: Impact hammer, sonoscope, or other nondestructive device may be permitted by Architect but will not be used as sole basis for approval or rejection of concrete.
13. Additional Tests: Testing and inspecting agency shall make additional tests of concrete when test results indicate that slump, air entrainment, compressive strengths, or other requirements have not been met, as directed by Architect. Testing and inspecting agency may conduct tests to determine adequacy of concrete by cored cylinders complying with ASTM C 42/C 42M or by other methods as directed by Architect.
14. Additional testing and inspecting, at Contractor's expense, will be performed to determine compliance of replaced or additional work with specified requirements.
15. Correct deficiencies in the Work that test reports and inspections indicate do not comply with the Contract Documents.

E. Measure floor and slab flatness and levelness according to ASTM E 1155 (ASTM E 1155M) within 24 hours of finishing.

3.16 PROTECTION OF LIQUID FLOOR TREATMENTS

A. Protect liquid floor treatment from damage and wear during the remainder of construction period. Use protective methods and materials, including temporary covering, recommended in writing by liquid floor treatments installer.

END OF SECTION 033000

SECTION 042000 - UNIT MASONRY

PART 1 - GENERAL

1.1 RELATED DOCUMENTS

A. Drawings and general provisions of the Contract, including General and Supplementary Conditions and Division 01 Specification Sections, apply to this Section.

1.2 SUMMARY

A. Section Includes:

1. Concrete masonry units.
2. Structural Clay Facing Tile
3. Face brick.
4. Mortar and grout.
5. Masonry joint reinforcement.
6. Ties and anchors.
7. Steel reinforcing bars.
8. Embedded flashing.
9. Miscellaneous masonry accessories.
10. Masonry cell insulation.
11. Miscellaneous cavity-wall insulation.

B. Related Sections:

1. Section 047200 "Cast Stone Masonry" for furnishing cast stone trim.
2. Section 051200 "Structural Steel Framing" for installing anchor sections of adjustable masonry anchors for connecting to structural steel frame.
3. Section 055000 "Metal Fabrications" for furnishing steel lintels and shelf angles for unit masonry.
4. Section 071113 “Bituminous Dampproofing” for dampproofing applied to masonry below grade.
5. Section 072100 “Thermal Insulation” for cavity wall insulation
6. Section 076200 "Sheet Metal Flashing and Trim" for exposed sheet metal flashing and for furnishing manufactured reglets installed in masonry joints.
7. Section 078413 “Penetration Fire Stopping” for fire stopping at opening in masonry walls.
8. Section 078446 “Fire Resistive Joint Systems” for joints in fire rated masonry walls.
9. Section 079200 “Joint Sealants” for joints in masonry walls.
10. Section 079500 “Expansion Control” for expansion joints in masonry walls.

1.3 DEFINITIONS

A. CMU(s): Concrete masonry unit(s).

B. Reinforced Masonry: Masonry containing reinforcing steel in grouted cells.

1.4 PERFORMANCE REQUIREMENTS

A. Provide structural unit masonry that develops indicated net-area compressive strengths at 28 days.

1. Determine net-area compressive strength of masonry from average net-area compressive strengths of masonry units and mortar types (unit-strength method) according to Tables 1 and 2 in ACI 530.1/ASCE 6/TMS 602.

1.5 SUBMITTALS

A. Product Data: For each type of product indicated.

B. Shop Drawings: For the following:

1. Masonry Units: Show sizes, profiles, coursing, and locations of special shapes.
2. Reinforcing Steel: Detail bending and placement of unit masonry reinforcing bars. Comply with ACI 315, "Details and Detailing of Concrete Reinforcement."
3. Fabricated Flashing: Detail corner units, end-dam units, and other special applications.

C. Samples for Initial Selection:

1. Colored mortar.

D. Samples for Verification: For each type and color of the following:

1. Structural Clay Facing Tile
2. Face brick, in the form of straps of five or more bricks.
3. Special brick shapes.
4. Accessories embedded in masonry.

E. Qualification Data: For testing agency.

F. Material Certificates: For each type and size of the following:

1. Masonry units.

    a. Include material test reports substantiating compliance with requirements.
    b. For brick, include size-variation data verifying that actual range of sizes falls within specified tolerances.
    c. For exposed brick, include test report for efflorescence according to ASTM C 67.
    d. For masonry units, include data and calculations establishing average net-area compressive strength of units.

2. Cementitious materials. Include brand, type, and name of manufacturer.
3. Preblended, dry mortar mixes. Include description of type and proportions of ingredients.
4. Grout mixes. Include description of type and proportions of ingredients.
5. Reinforcing bars.
6. Joint reinforcement.
7. Anchors, ties, and metal accessories.

G. Mix Designs: For each type of mortar and grout. Include description of type and proportions of ingredients.

1. Include test reports for mortar mixes required to comply with property specification. Test according to ASTM C 109/C 109M for compressive strength, ASTM C 1506 for water retention, and ASTM C 91 for air content.
2. Include test reports, according to ASTM C 1019, for grout mixes required to comply with compressive strength requirement.

H. Statement of Compressive Strength of Masonry: For each combination of masonry unit type and mortar type, provide statement of average net-area compressive strength of masonry units, mortar type, and resulting net-area compressive strength of masonry determined according to Tables 1 and 2 in ACI 530.1/ASCE 6/TMS 602.

I. Cold-Weather and Hot-Weather Procedures: Detailed description of methods, materials, and equipment to be used to comply with requirements.

1.6 QUALITY ASSURANCE

A. Testing Agency Qualifications: Qualified according to ASTM C 1093 for testing indicated.

B. Source Limitations for Masonry Units: Obtain exposed masonry units of a uniform texture and color, or a uniform blend within the ranges accepted for these characteristics, from single source from single manufacturer for each product required.

C. Source Limitations for Mortar Materials: Obtain mortar ingredients of a uniform quality, including color for exposed masonry, from single manufacturer for each cementitious component and from single source or producer for each aggregate.

D. Masonry Standard: Comply with ACI 530.1/ASCE 6/TMS 602 unless modified by requirements in the Contract Documents.

E. Sample Panels: Build sample panels of each supplier's product to demonstrate aesthetic effects. Comply with requirements in Division 01 Section "Quality Requirements" for mockups.

1. Build sample panels for each type of exposed unit masonry construction in sizes approximately 48 inches (1200 mm) long by 48 inches (1200 mm) high.

    a. For exterior face brick, build the following sample panels of each supplier's brick, including those listed as alternates.

        1) One panel made of Type BK-1 and BK-2 per brick patterning details on drawings.

2. Clean one-half of exposed faces of panels with masonry cleaner indicated.
3. Protect approved sample panels from the elements with weather-resistant membrane.
4. Erection of sample panels is for final product selection based on color, texture, and blending of masonry units; relationship of mortar to masonry unit colors and other material and construction qualities specifically approved by Architect in writing.

    a. Approval of sample panels does not constitute approval of deviations from the Contract Documents contained in sample panels unless such deviations are specifically approved by Architect in writing.

F. Mockup: Prior to installing unit masonry, construct mockup wall panels to verify selections made under sample submittals and to demonstrate aesthetic effects of materials and execution. Build mockups to comply with the following requirements, using materials indicated for final unit of Work.

1. Locate mockups on site in the locations indicated or, if not indicated, as directed by Architect.
2. Build mockup of wall areas as shown on Drawings.

    a. Include sealant-filled joint complying with requirements of Division 7 Section "Joint Sealants."

3. Build mockups for each of the following types of masonry in height and width shown on drawings by full thickness, including face and back-up wythes as well as accessories. Coordinate panel make-up with Architect.

    a. Exterior masonry wall as designated on exterior elevations.

4. Clean exposed faces of mockups with masonry cleaner indicated.

5. Notify Architect one week in advance of the dates and times when mockups will be constructed.

6. Protect accepted mockups from the elements with weather-resistant membrane.

7. Retain and maintain mockups during construction in an undisturbed condition as a standard for judging the completed Work.

    a. Acceptance of mockups is for color, texture, and blending of masonry units; relationship of mortar and sealant colors to masonry unit colors; tooling of joints; aesthetic qualities of workmanship; and other material and construction qualities specifically approved by Architect in writing.

        1) Acceptance of mockups does not constitute approval of deviations from the Contract Documents contained in mockups, unless such deviations are specifically approved by Architect in writing.

1.7 DELIVERY, STORAGE, AND HANDLING

A. Store masonry units on elevated platforms in a dry location. If units are not stored in an enclosed location, cover tops and sides of stacks with waterproof sheeting, securely tied. If units become wet, do not install until they are dry.

B. Store cementitious materials on elevated platforms, under cover, and in a dry location. Do not use cementitious materials that have become damp.

C. Store aggregates where grading and other required characteristics can be maintained and contamination avoided.

D. Deliver preblended, dry mortar mix in moisture-resistant containers designed for use with dispensing silos. Store preblended, dry mortar mix in delivery containers on elevated platforms, under cover, and in a dry location or in covered weatherproof dispensing silos.

E. Store masonry accessories, including metal items, to prevent corrosion and accumulation of dirt and oil.

1.8 PROJECT CONDITIONS

A. Protection of Masonry: During construction, cover tops of walls, projections, and sills with waterproof sheeting at end of each day's work. Cover partially completed masonry when construction is not in progress.

1. Extend cover a minimum of 24 inches (600 mm) down both sides of walls and hold cover securely in place.
2. Where one wythe of multi-wythe masonry walls is completed in advance of other wythes, secure cover a minimum of 24 inches (600 mm) down face next to unconstructed wythe and hold cover in place.

B. Do not apply uniform floor or roof loads for at least 12 hours and concentrated loads for at least three days after building masonry walls or columns.

C. Stain Prevention: Prevent grout, mortar, and soil from staining the face of masonry to be left exposed or painted. Immediately remove grout, mortar, and soil that come in contact with such masonry.

1. Protect base of walls from rain-splashed mud and from mortar splatter by spreading coverings on ground and over wall surface.
2. Protect sills, ledges, and projections from mortar droppings.
3. Protect surfaces of window and door frames, as well as similar products with painted and integral finishes, from mortar droppings.
4. Turn scaffold boards near the wall on edge at the end of each day to prevent rain from splashing mortar and dirt onto completed masonry.

D. Cold-Weather Requirements: Do not use frozen materials or materials mixed or coated with ice or frost. Do not build on frozen substrates. Remove and replace unit masonry damaged by frost or by freezing conditions. Comply with cold-weather construction requirements contained in ACI 530.1/ASCE 6/TMS 602.

1. Cold-Weather Cleaning: Use liquid cleaning methods only when air temperature is 40 deg F (4 deg C) and higher and will remain so until masonry has dried, but not less than seven days after completing cleaning.

E. Hot-Weather Requirements: Comply with hot-weather construction requirements contained in ACI 530.1/ASCE 6/TMS 602.

PART 2 - PRODUCTS

2.1 MASONRY UNITS, GENERAL

A. Defective Units: Referenced masonry unit standards may allow a certain percentage of units to contain chips, cracks, or other defects exceeding limits stated in the standard. Do not use units where such defects will be exposed in the completed Work.

B. Fire-Resistance Ratings: Where indicated, provide units that comply with requirements for fire-resistance ratings indicated as determined by testing according to ASTM E 119, by equivalent masonry thickness, or by other means, as acceptable to authorities having jurisdiction.

2.2 CONCRETE MASONRY UNITS

A. Shapes: Provide shapes indicated and as follows, with exposed surfaces matching exposed faces of adjacent units unless otherwise indicated.

1. Provide special shapes for lintels, corners, jambs, sashes, movement joints, headers, bonding, and other special conditions.
2. Provide bullnose units for outside corners unless otherwise indicated.

B. CMUs: ASTM C 90.
1. Density Classification: Normal weight unless otherwise indicated.
2. Size (Width): Manufactured to the following dimensions:

a. 4” nominal; 3 5/8” actual.

b. 6” nominal; 5 5/8”actual.
c. 8” nominal; 7 5/8” actual.
d. 12” nominal; 11 5/8” actual.

3. Exposed Faces: Provide color and texture matching the range represented by Architect's sample.

2.3 BRICK

A. General: Provide shapes indicated and as follows, with exposed surfaces matching finish and color of exposed faces of adjacent units:

1. For ends of sills and caps and for similar applications that would otherwise expose unfinished brick surfaces, provide units without cores or frogs and with exposed surfaces finished.
2. Provide special shapes for applications where stretcher units cannot accommodate special conditions, including those at corners, movement joints, bond beams, sashes, and lintels.
3. Provide special shapes for applications requiring brick of size, form, color, and texture on exposed surfaces that cannot be produced by sawing.
4. Provide special shapes for applications where shapes produced by sawing would result in sawed surfaces being exposed to view.

B. Face Brick: Facing brick complying with ASTM C 216

1. Products: Subject to compliance with requirements, provide one of the following:

a. Face Brick Type **(BK-1)** Size (w x h x l): Ambassador (3-5/8” x 2-1/4” x 15-5/8”) with Norman (3-5/8” x 2-1/4” x 11-5/8”) and Modular (3-5/8” x 2 ¼” x 7-5/8”) as detailed. See drawings for special shape bricks (SSB-1)

1) Include one of the following selections:

a) Belden: Mayo Clear Range A

b) Glen-Gery: Smokey Quartz

b. Face Brick Type **(BK-2)** Size (w x h x l): Ambassador (3-5/8” x 2-1/4” x 15-5/8”) with Norman (3-5/8” x 2-1/4” x 11-5/8”) and Modular (3-5/8” x 2 ¼” x 7-5/8”) as detailed. See drawings for special shape bricks (SSB-1)

1) Include one of the following selections:

a) Belden: Graystone Velour A

b) Glen-Gery: W72 Smoky Quartz

2.4 STRUCTURAL-CLAY FACING TILE

A. General:

1. Provide solid, multicored, or hollow units, with shape and direction of cores optional unless otherwise indicated.
2. Where reinforced masonry is indicated, provide multicored units designed for use in reinforced, grouted masonry; either with vertical cores and with webs notched to receive horizontal reinforcement, or with horizontal cores and with holes in bed shells for placement of grout and to receive vertical reinforcement.
3. Provide special shapes where required for corners, jambs, coved bases, sills, and other special conditions indicated, including applications that cannot be produced by sawing standard units.

    a. Provide bullnose units for outside corners unless otherwise indicated.

4. Where direct application of plaster is indicated, or where bonded to backup masonry, provide units with rough, combed, or scored faces.

B. Glazed Structural-Clay Facing Tile: ASTM C 126, Grade S (select).

1. Products: Subject to compliance with requirements.
    a. Substitutions: Requests for substitutions shall be made in writing <u>at least ten days prior</u> to the date of the Bid Opening and must meet the requirements set forth in Instructions to Bidders.
    b. Basis of Design Product: Elgin Butler

        1) Sizes: 8W Series with actual face dimensions of 7-3/4 inches (196.9 mm) high by 15-3/4 inches (400.1 mm) long by widths indicated.
2. Width: Manufactured to dimensions 1/4 inch (6.4 mm) less than nominal dimensions.
3. Provide Type I (single-faced units).
4. Provide special units glazed on ends and tops, as well as faces for corners, jambs, sills, pilasters, columns, and other applications indicated, where glazed units are exposed on other surfaces and faces.
5. Colors and Patterns: As selected by Architect from manufacturer's full range.

2.5 MORTAR AND GROUT MATERIALS

A. Portland Cement: ASTM C 150, Type I or II, except Type III may be used for cold-weather construction. Provide natural color or white cement as required to produce mortar color indicated.

B. Hydrated Lime: ASTM C 207, Type S.

C. Portland Cement-Lime Mix: Packaged blend of portland cement and hydrated lime containing no other ingredients.

D. Colored Cement Product: Packaged blend made from portland cement and hydrated lime and mortar pigments, all complying with specified requirements, and containing no other ingredients.

1. Colored Portland Cement-Lime Mix:

    a. <u>Products</u>: Subject to compliance with requirements, provide one of the following

1) Capital Materials Corporation; Riverton Portland Cement Lime Custom Color.
2) Holcim (US) Inc.; Rainbow Mortamix Custom Color Cement/Lime.
3) Lafarge North America Inc.; Eaglebond Portland & Lime.
4) Lehigh Cement Company; Lehigh Custom Color Portland/Lime Cement.

2. Formulate blend as required to produce color indicated or, if not indicated, as selected from manufacturer's standard colors.
3. Pigments shall not exceed 10 percent of portland cement by weight.

E. Aggregate for Mortar: ASTM C 144.

1. For mortar that is exposed to view, use washed aggregate consisting of natural sand or crushed stone.
2. For joints less than 1/4 inch (6 mm) thick, use aggregate graded with 100 percent passing the No. 16 (1.18-mm) sieve.
3. White-Mortar Aggregates: Natural white sand or crushed white stone.
4. Colored-Mortar Aggregates: Natural sand or crushed stone of color necessary to produce required mortar color.

F. Aggregate for Grout: ASTM C 404.

G. Cold-Weather Admixture: Nonchloride, noncorrosive, accelerating admixture complying with ASTM C 494/C 494M, Type C, and recommended by manufacturer for use in masonry mortar of composition indicated.

1. Products: Subject to compliance with requirements, provide one of the following

a. Euclid Chemical Company (The); Accelguard 80.
b. Grace Construction Products, W. R. Grace & Co. - Conn.; Morset.
c. Sonneborn Products, BASF Aktiengesellschaft; Trimix-NCA.

2.6 REINFORCEMENT

A. Uncoated Steel Reinforcing Bars: ASTM A 615/A 615M or ASTM A 996/A 996M, Grade 60 (Grade 420).

B. Masonry Joint Reinforcement, General: ASTM A 951/A 951M.

1. Interior Walls: Hot-dip galvanized, carbon steel.
2. Exterior Walls: Hot-dip galvanized**,** carbon steel.
3. Wire Size for Side Rods: 0.148-inch (3.77-mm) diameter.
4. Wire Size for Cross Rods: 0.148-inch (3.77-mm) diameter.
5. Wire Size for Veneer Ties: 0.148-inch (3.77-mm) diameter.
6. Spacing of Cross Rods, Tabs, and Cross Ties: Not more than 16 inches (407 mm) o.c.
7. Provide in lengths of not less than 10 feet (3 m), with prefabricated corner and tee units.

C. Masonry Joint Reinforcement for Single-Wythe Masonry: Either ladder or truss type with single pair of side rods.

D. Masonry Joint Reinforcement for Multiwythe Masonry:

1. Ladder type with 1 side rod at each face shell of hollow masonry units more than 4 inches (100 mm) wide, plus 1 side rod at each wythe of masonry 4 inches (100 mm) wide or less.
2. Adjustable (two-piece) type, either ladder or truss design, with one side rod at each face shell of backing wythe and with separate adjustable ties with pintle-and-eye connections having a maximum

adjustment of 1-1/4 inches (32 mm). Size ties to extend at least halfway through facing wythe but with at least 5/8-inch (16-mm) cover on outside face.

2.7 TIES AND ANCHORS

A. Materials: Provide ties and anchors specified in this article that are made from materials that comply with the following unless otherwise indicated.
   1. Hot-Dip Galvanized, Carbon-Steel Wire: ASTM A 82/A 82M; with ASTM A 153/A 153M, Class B-2 coating.
   2. Galvanized Steel Sheet: ASTM A 653/A 653M, Commercial Steel, G60 (Z180) zinc coating.
   3. Steel Sheet, Galvanized after Fabrication: ASTM A 1008/A 1008M, Commercial Steel, with ASTM A 153/A 153M, Class B coating.

B. Wire Ties, General: Unless otherwise indicated, size wire ties to extend at least halfway through veneer but with at least 5/8-inch (16-mm) cover on outside face. Outer ends of wires are bent 90 degrees and extend 2 inches (50 mm) parallel to face of veneer.

C. Adjustable Anchors for Connecting to Structural Steel Framing: Provide anchors that allow vertical or horizontal adjustment but resist tension and compression forces perpendicular to plane of wall.

   1. Anchor Section for Welding to Steel Frame: Crimped 1/4-inch- (6.35-mm-) diameter, hot-dip galvanized steel wire.
   2. Tie Section: Triangular-shaped wire tie, sized to extend within 1 inch (25 mm) of masonry face, made from 0.187-inch- (4.76-mm-) diameter, hot-dip galvanized steel wire.

D. Adjustable Masonry-Veneer Anchors:

   1. General: Provide anchors that allow vertical adjustment but resist tension and compression forces perpendicular to plane of wall, for attachment over sheathing to wood or metal studs, and as follows:

      a. Structural Performance Characteristics: Capable of withstanding a 100-lbf (445-N) load in both tension and compression without deforming or developing play in excess of 0.05 inch (1.3 mm).

   2. Wire Ties: Triangular-, rectangular-, or T-shaped wire ties fabricated from 0.187-inch-(4.76-mm-) diameter, hot-dip galvanized-steel wire unless otherwise indicated.

   3. Screw-Attached, Masonry-Veneer Anchors: Units consisting of a wire tie and a metal anchor section.

      a. Products: Subject to compliance with requirements, provide one of the following:

         1) Heckmann Building Products Inc.; Pos-i-tie
         2) Hohmann & Barnard, Inc.; X-SEAL Anchor.

2.8 MISCELLANEOUS ANCHORS

A. Anchor Bolts: Headed or L-shaped steel bolts complying with ASTM A 307, Grade A (ASTM F 568M, Property Class 4.6); with ASTM A 563 (ASTM A 563M) hex nuts and, where indicated, flat washers; hot-dip galvanized to comply with ASTM A 153/A 153M, Class C; of dimensions indicated.

2.9 EMBEDDED FLASHING MATERIALS

A. Metal Flashing: Provide metal flashing complying with SMACNA's "Architectural Sheet Metal Manual", Section 076200 "Sheet Metal Flashing and Trim", and as follows:

1. Stainless Steel: ASTM A 240/A 240M, Type 304, 0.016 inch (0.40 mm) thick.
2. Fabricate continuous flashings in sections 96 inches (2400 mm) long minimum, but not exceeding 12 feet (3.7 m). Provide splice plates at joints of formed, smooth metal flashing.
3. Fabricate through-wall metal flashing embedded in masonry from stainless steel, with ribs at 3-inch (76-mm) intervals along length of flashing to provide an integral mortar bond.

    a. Products: Subject to compliance with requirements, provide one of the following:

        1) Cheney Flashing Company; Cheney 3-Way Flashing (Sawtooth).
        2) Keystone Flashing Company, Inc.; Keystone 3-Way Interlocking Thruwall Flashing.
        3) Sandell Manufacturing Co., Inc.; Mechanically Keyed Flashing.

4. Fabricate through-wall flashing with snaplock receiver on exterior face where indicated to receive counterflashing.
5. Fabricate metal drip edges for ribbed metal flashing from plain metal flashing of same metal as ribbed flashing and extending at least 3 inches (76 mm) into wall with hemmed inner edge to receive ribbed flashing and form a hooked seam. Form hem on upper surface of metal so that completed seam will shed water.
6. Metal Drip Edge: Fabricate from stainless steel. Extend at least 3 inches (76 mm) into wall and 1/2 inch (13 mm) out from wall, with outer edge bent down 30 degrees and hemmed.
7. Metal Expansion-Joint Strips: Fabricate from stainless steel to shapes indicated.

B. Flexible Flashing: Use the following unless otherwise indicated:

1. Asphalt-Coated Copper Flashing: 7-oz. /sq. ft. (2-kg/sq. m) copper sheet coated with flexible asphalt. Use only where flashing is fully concealed in masonry.

    a. Products: Subject to compliance with requirements, provide one of the following:

        1) Advanced Building Products Inc.; Cop-R-Cote.
        2) Dayton Superior Corporation, Dur-O-Wal Division; Copper Coated Thru-Wall Flashing.
        3) Hohmann & Barnard, Inc.; H & B C-Coat Flashing.
        4) Phoenix Building Products; Type ACC-Asphalt Bituminous Coated.
        5) Sandell Manufacturing Co., Inc.; Coated Copper Flashing.

C. Solder and Sealants for Sheet Metal Flashings: As specified in Section 076200 "Sheet Metal Flashing and Trim."

D. Adhesives, Primers, and Seam Tapes for Flashings: Flashing manufacturer's standard products or products recommended by flashing manufacturer for bonding flashing sheets to each other and to substrates.

2.10 MISCELLANEOUS MASONRY ACCESSORIES

A. Weep/Vent Products: Use the following unless otherwise indicated:

1. Wicking Material: Absorbent rope, made from cotton or UV-resistant synthetic fiber, 1/4 to 3/8 inch (6 to 10 mm) in diameter, in length required to produce 2-inch (50-mm) exposure on exterior and 18 inches (450 mm) in cavity. Use only for weeps.
2. Round Plastic Weep/Vent Tubing: Medium-density polyethylene, 3/8-inch (9-mm) OD by 4 inches (100 mm) long.

B. Cavity Drainage Material: Free-draining mesh, made from polymer strands that will not degrade within the wall cavity.

1. Products: Subject to compliance with requirements, provide one of the following:

a. Advanced Building Products Inc.; Mortar Maze
b. Archovations, Inc.; CavClear Masonry Mat.

2. Provide the following configurations:
a. Sheets or strips full depth of cavity and installed to full height of cavity.

C. Reinforcing Bar Positioners: Wire units designed to fit into mortar bed joints spanning masonry unit cells and hold reinforcing bars in center of cells. Units are formed from 0.148-inch (3.77-mm) steel wire, hot-dip galvanized after fabrication. Provide units designed for number of bars indicated.

1. Products: Subject to compliance with requirements, available products that may be incorporated into the Work include, but are not limited to, the following:

a. Dayton Superior Corporation, Dur-O-Wal Division; D/A 810, D/A 812 or D/A 817.
b. Heckmann Building Products Inc.; No. 376 Rebar Positioner.
c. Hohmann & Barnard, Inc.; #RB or #RB-Twin Rebar Positioner.
d. Wire-Bond; O-Ring or Double O-Ring Rebar Positioner.

2.11 MASONRY-CELL INSULATION

A. Loose-Granular Fill Insulation: Perlite complying with ASTM C 549, Type II (surface treated for water repellency and limited moisture absorption) or Type IV (surface treated for water repellency and to limit dust generation).

2.12 MISCELLENIOUS CAVITY-WALL INSULATION

A. Extruded-Polystyrene Board Insulation with Increased R-Value: ASTM C 578, Type IV, but with an aged thermal resistance (R-value) for 1-inch (25-mm) thickness of 5.6 deg F x h x sq. ft. /Btu at 75 deg F (1.0 K x sq. m/W at 24 deg C) at 5 years; closed-cell product with a carbon-black filler and extruded with an integral skin.

B. Adhesive: Type recommended by insulation board manufacturer for application indicated.

2.13 MASONRY CLEANERS

A. Proprietary Acidic Cleaner: Manufacturer's standard-strength cleaner designed for removing mortar/grout stains, efflorescence, and other new construction stains from new masonry without discoloring or damaging masonry surfaces. Use product expressly approved for intended use by cleaner manufacturer and manufacturer of masonry units being cleaned.

1. Manufacturers: Subject to compliance with requirements, provide products by one of the following:

a. Diedrich Technologies, Inc.
b. EaCo Chem, Inc.
c. ProSoCo, Inc.

2.14 MORTAR AND GROUT MIXES

A. General: Do not use admixtures, including pigments, air-entraining agents, accelerators, retarders, water-repellent agents, antifreeze compounds, or other admixtures, unless otherwise indicated.

1. Do not use calcium chloride in mortar or grout.
2. Use portland cement-lime mortar.
3. Add cold-weather admixture (if used) at same rate for all mortar that will be exposed to view, regardless of weather conditions, to ensure that mortar color is consistent.

B. Preblended, Dry Mortar Mix: Furnish dry mortar ingredients in form of a preblended mix. Measure quantities by weight to ensure accurate proportions, and thoroughly blend ingredients before delivering to Project site.

C. Mortar for Unit Masonry: Comply with ASTM C 270, Property Specification. Provide the following types of mortar for applications stated unless another type is indicated.

1. For masonry below grade or in contact with earth, use Type S.
2. For reinforced masonry, use Type N.
3. For mortar parge coats, use Type S.
4. For exterior, above-grade, load-bearing and non-load-bearing walls and parapet walls; for interior load-bearing walls; for interior non-load-bearing partitions; and for other applications where another type is not indicated, use Type N.
5. For interior non-load-bearing partitions, Type O may be used instead of Type N.

D. Grout for Unit Masonry: Comply with ASTM C 476.

1. Use grout of type indicated or, if not otherwise indicated, of type (fine or coarse) that will comply with Table 1.15.1 in ACI 530.1/ASCE 6/TMS 602 for dimensions of grout spaces and pour height.
2. Proportion grout in accordance with ASTM C 476, Table 1.
3. Provide grout with a slump of 8 to 11 inches (203 to 279 mm) as measured according to ASTM C 143/C 143M.

PART 3 - EXECUTION

3.1 EXAMINATION

A. Examine conditions, with Installer present, for compliance with requirements for installation tolerances and other conditions affecting performance of the Work.

1. For the record, prepare written report, endorsed by Installer, listing conditions detrimental to performance of work.
2. Verify that foundations are within tolerances specified.
3. Verify that reinforcing dowels are properly placed.

B. Before installation, examine rough-in and built-in construction for piping systems to verify actual locations of piping connections.

C. Proceed with installation only after unsatisfactory conditions have been corrected.

3.2 INSTALLATION, GENERAL

A. Thickness: Build cavity and composite walls and other masonry construction to full thickness shown. Build single-wythe walls to actual widths of masonry units, using units of widths indicated.

B. Build chases and recesses to accommodate items specified in this and other Sections.

C. Leave openings for equipment to be installed before completing masonry. After installing equipment, complete masonry to match the construction immediately adjacent to opening.

D. Use full-size units without cutting if possible. If cutting is required to provide a continuous pattern or to fit adjoining construction, cut units with motor-driven saws; provide clean, sharp, unchipped edges. Allow units to dry before laying unless wetting of units is specified. Install cut units with cut surfaces and, where possible, cut edges concealed.

E. Select and arrange units for exposed unit masonry to produce a uniform blend of colors and textures.

1. Mix units from several pallets or cubes as they are placed.

F. Wetting of Brick: Wet brick before laying if initial rate of absorption exceeds 30 g/30 sq. in. (30 g/194 sq. cm) per minute when tested per ASTM C 67. Allow units to absorb water so they are damp but not wet at time of laying.

G. Comply with construction tolerances in ACI 530.1/ASCE 6/TMS 602 and with the following:

1. For conspicuous vertical lines, such as external corners, door jambs, reveals, and expansion and control joints, do not vary from plumb by more than 1/8 inch in 10 feet (3 mm in 3 m).
2. For vertical alignment of exposed head joints, do not vary from plumb by more than 1/4 inch in 10 feet (6 mm in 3 m) maximum.
3. For conspicuous horizontal lines, such as lintels, sills, parapets, and reveals, do not vary from level by more than 1/8 inch in 10 feet (3 mm in 3 m) maximum.
4. For exposed bed joints, do not vary from thickness indicated by more than plus or minus 1/8 inch (3 mm), with a maximum thickness limited to 1/2 inch (12 mm). Do not vary from bed-joint thickness of adjacent courses by more than 1/8 inch (3 mm).
5. For exposed head joints, do not vary from thickness indicated by more than plus or minus 1/8 inch (3 mm). Do not vary from adjacent bed-joint and head-joint thicknesses by more than 1/8 inch (3 mm).
6. For faces of adjacent exposed masonry units, do not vary from flush alignment by more than 1/16 inch (1.5 mm) except due to warpage of masonry units within tolerances specified for warpage of units.
7. For exposed bed joints and head joints of stacked bond, do not vary from a straight line by more than 1/16 inch (1.5 mm) from one masonry unit to the next.

3.3 LAYING MASONRY WALLS

A. Lay out walls in advance for accurate spacing of surface bond patterns with uniform joint thicknesses and for accurate location of openings, movement-type joints, returns, and offsets. Avoid using less-than-half-size units, particularly at corners, jambs, and, where possible, at other locations.

B. Bond Pattern for Exposed Masonry: Unless otherwise indicated, lay exposed masonry in running bond; do not use units with less than nominal 4-inch (100-mm) horizontal face dimensions at corners or jambs.

C. Lay concealed masonry with all units in a wythe in running bond or bonded by lapping not less than 2 inches (50 mm). Bond and interlock each course of each wythe at corners. Do not use units with less than nominal 4-inch (100-mm) horizontal face dimensions at corners or jambs.

D. Stopping and Resuming Work: Stop work by racking back units in each course from those in course below; do not tooth. When resuming work, clean masonry surfaces that are to receive mortar, remove loose masonry units and mortar, and wet brick if required before laying fresh masonry.

E. Built-in Work: As construction progresses, build in items specified in this and other Sections. Fill in solidly with masonry around built-in items.

F. Fill space between steel frames and masonry solidly with mortar unless otherwise indicated.

G. Where built-in items are to be embedded in cores of hollow masonry units, place a layer of metal lath, wire mesh, or plastic mesh in the joint below and rod mortar or grout into core.

H. Fill cores in hollow CMUs with grout 24 inches (600 mm) under bearing plates, beams, lintels, posts, and similar items unless otherwise indicated.

I. Build non-load-bearing interior partitions full height of story to underside of solid floor or roof structure above unless otherwise indicated.

1. Fasten partition top anchors to structure above and build into top of partition. Grout cells of CMUs solidly around plastic tubes of anchors and push tubes down into grout to provide 1/2-inch (13-mm) clearance between end of anchor rod and end of tube. Space anchors 48 inches o.c. unless otherwise indicated.

2. Wedge non-load-bearing partitions against structure above with small pieces of tile, slate, or metal. Fill joint with mortar after dead-load deflection of structure above approaches final position.

3. At fire-rated partitions, treat joint between top of partition and underside of structure above to comply with Section 078446 "Fire-Resistive Joint Systems."

3.4 MORTAR BEDDING AND JOINTING

A. Lay hollow CMUs as follows:

1. With face shells fully bedded in mortar and with head joints of depth equal to bed joints.
2. With webs fully bedded in mortar in all courses of piers, columns, and pilasters.
3. With webs fully bedded in mortar in grouted masonry, including starting course on footings.
4. With entire units, including areas under cells, fully bedded in mortar at starting course on footings where cells are not grouted.

B. Lay solid masonry units with completely filled bed and head joints; butter ends with sufficient mortar to fill head joints and shove into place. Do not deeply furrow bed joints or slush head joints.

C. Set cast-stone trim units in full bed of mortar with full vertical joints. Fill dowel, anchor, and similar holes.

1. Clean soiled surfaces with fiber brush and soap powder and rinse thoroughly with clear water.
2. Allow cleaned surfaces to dry before setting.
3. Wet joint surfaces thoroughly before applying mortar.

D. Tool exposed joints slightly concave when thumbprint hard, using a jointer larger than joint thickness unless otherwise indicated.

1. For glazed masonry units, use a nonmetallic jointer 3/4 inch (19 mm) or more in width.

E. Cut joints flush for masonry walls to receive plaster or other direct-applied finishes (other than paint) unless otherwise indicated.

3.5 CAVITY WALLS

A. Bond wythes of cavity walls together using one of the following methods:

1. Individual Metal Ties: Provide ties as shown installed in horizontal joints, but not less than one metal tie for 1.77 sq. ft. (0.16 sq. m) of wall area spaced not to exceed 16 inches (406 mm) o.c. horizontally and 16 inches (406 mm) o.c. vertically. Stagger ties in alternate courses. Provide additional ties within 12 inches (305 mm) of openings and space not more than 36 inches (915 mm) apart around perimeter of openings. At intersecting and abutting walls, provide ties at no more than 24 inches (610 mm) o.c. vertically.

2. Masonry Joint Reinforcement: Installed in horizontal mortar joints.
   a. Where one wythe is of clay masonry and the other of concrete masonry, use adjustable (two-piece) type reinforcement to allow for differential movement regardless of whether bed joints align.

3. Masonry Veneer Anchors: Comply with requirements for anchoring masonry veneers.

B. Bond wythes of cavity walls together using bonding system indicated on Drawings.

C. Keep cavities clean of mortar droppings and other materials during construction. Bevel beds away from cavity, to minimize mortar protrusions into cavity. Do not attempt to trowel or remove mortar fins protruding into cavity.

D. Parge cavity face of backup wythe in a single coat approximately 3/8 inch (10 mm) thick. Trowel face of parge coat smooth.

E. Coat below grade masonry to comply with Section 071113 "Bituminous Dampproofing."

F. Apply Insulating Air Barrier to face of backup wythe to comply with Section 072100 "Insulating Air Barriers."

G. Installing Miscellaneous Cavity-Wall Insulation: Place small dabs of adhesive, spaced approximately 12 inches (300 mm) o.c. both ways, on inside face of insulation boards, or attach with plastic fasteners designed for this purpose. Fit courses of insulation between wall ties and other confining obstructions in cavity, with edges butted tightly both ways. Press units firmly against inside wythe of masonry or other construction as shown.

1. Fill cracks and open gaps in insulation with crack sealer compatible with insulation and masonry.

3.6 MASONRY-CELL INSULATION

A. Pour granular insulation into cavities to fill void spaces. Maintain inspection ports to show presence of insulation at extremities of each pour area. Close the ports after filling has been confirmed. Limit the fall of insulation to 1 story high, but not more than 20 feet (6 m).

3.7 MASONRY JOINT REINFORCEMENT

A. General: Install entire length of longitudinal side rods in mortar with a minimum cover of 5/8 inch (16 mm) on exterior side of walls, 1/2 inch (13 mm) elsewhere. Lap reinforcement a minimum of 6 inches (150 mm).

1. Space reinforcement not more than 16 inches (406 mm) o.c.
2. Space reinforcement not more than 8 inches (203 mm) o.c. in foundation walls and parapet walls.
3. Provide reinforcement not more than 8 inches (203 mm) above and below wall openings and extending 12 inches (305 mm) beyond openings.

B. Interrupt joint reinforcement at control and expansion joints unless otherwise indicated.

C. Provide continuity at wall intersections by using prefabricated T-shaped units.

D. Provide continuity at corners by using prefabricated L-shaped units.

E. Cut and bend reinforcing units as directed by manufacturer for continuity at returns, offsets, column fireproofing, pipe enclosures, and other special conditions.

3.8 ANCHORING MASONRY TO STRUCTURAL STEEL

A. Anchor masonry to structural steel where masonry abuts or faces structural steel to comply with the following:

1. Provide an open space not less than 1/2 inch wide between masonry and structural steel or concrete unless otherwise indicated. Keep open space free of mortar and other rigid materials.
2. Anchor masonry with anchors embedded in masonry joints and attached to structure.
3. Space anchors as indicated, but not more than 24 inches (610 mm) o.c. vertically and 36 inches (915 mm) o.c. horizontally.

3.9 ANCHORING MASONRY VENEERS

A. Anchor masonry veneers to wall framing with masonry-veneer anchors to comply with the following requirements:

1. Fasten screw-attached anchors through sheathing to wall framing metal fasteners of type indicated. Use two fasteners unless anchor design only uses one fastener.
2. Embed tie sections in masonry joints. Provide not less than 2 inches (50 mm) of air space between back of masonry veneer and face of sheathing.
3. Locate anchor sections to allow maximum vertical differential movement of ties up and down.
4. Space anchors as indicated, but not more than 16 inches o.c. vertically and 16 inches o.c. horizontally with not less than 1 anchor for each 2.67 sq. ft. (0.25 sq. m) of wall area. Install additional anchors within 12 inches (305 mm) of openings and at intervals, not exceeding 36 inches (914 mm), around perimeter.

3.10 CONTROL AND EXPANSION JOINTS

A. General: Install control and expansion joint materials in unit masonry as masonry progresses. Do not allow materials to span control and expansion joints without provision to allow for in-plane wall or partition movement.

B. Form control joints in concrete masonry as follows:

1. Install temporary foam-plastic filler in head joints and remove filler when unit masonry is complete for application of sealant.

C. Form expansion joints in brick as follows:

1. Build flanges of metal expansion strips into masonry. Lap each joint 4 inches (100 mm) in direction of water flow. Seal joints below grade and at junctures with horizontal expansion joints if any.
2. Build flanges of factory-fabricated, expansion-joint units into masonry.
3. Form open joint full depth of brick wythe and of width indicated, but not less than 3/8 inch (10 mm) for installation of sealant and backer rod specified in Section 079200 "Joint Sealants."

3.11 LINTELS

A. Install steel lintels where indicated.

B. Provide minimum bearing of 8 inches (200 mm) at each jamb unless otherwise indicated.

3.12 FLASHING, WEEP HOLES, CAVITY DRAINAGE, AND VENTS

A. General: Install embedded flashing and weep holes in masonry at shelf angles, lintels, ledges, other obstructions to downward flow of water in wall, and where indicated. Install vents at shelf angles, ledges, and other obstructions to upward flow of air in cavities, and where indicated.

B. Install flashing as follows unless otherwise indicated:

1. Prepare masonry surfaces so they are smooth and free from projections that could puncture flashing. Where flashing is within mortar joint, place through-wall flashing on sloping bed of mortar and cover with mortar. Before covering with mortar, seal penetrations in flashing with adhesive, sealant, or tape as recommended by flashing manufacturer.
2. At multiwythe masonry walls, including cavity walls, extend flashing through outer wythe, turned up a minimum of 8 inches, and through inner wythe to within 1/2 inch (13 mm) of the interior face of wall in exposed masonry. Where interior face of wall is to receive furring or framing, carry flashing completely through inner wythe and turn flashing up approximately 2 inches (50 mm) on interior face.
3. At masonry-veneer walls, extend flashing through veneer, across air space behind veneer, and up face of sheathing at least 8 inches (200 mm); with upper edge tucked under building paper or building wrap, lapping at least 4 inches (100 mm).
4. At lintels and shelf angles, extend flashing a minimum of 6 inches (150 mm) into masonry at each end. At heads and sills, extend flashing 6 inches (150 mm) at ends and turn up not less than 2 inches (50 mm) to form end dams.
5. Interlock end joints of ribbed sheet metal flashing by overlapping ribs not less than 1-1/2 inches (38 mm) or as recommended by flashing manufacturer, and seal lap with elastomeric sealant complying with requirements in Section 079200 "Joint Sealants" for application indicated.
6. Install metal drip edges with ribbed sheet metal flashing by interlocking hemmed edges to form hooked seam.
7. Install metal drip edges beneath flexible flashing at exterior face of wall. Stop flexible flashing 1/2 inch (13 mm) back from outside face of wall and adhere flexible flashing to top of metal drip edge.
8. Cut flexible flashing off flush with face of wall after masonry wall construction is completed.

C. Install reglets and nailers for flashing and other related construction where they are shown to be built into masonry.

D. Install weep holes in head joints in exterior wythes of first course of masonry immediately above embedded flashing and as follows:

1. Use specified weep/vent products to form weep holes.
2. Use wicking material to form weep holes above flashing under brick sills. Turn wicking down at lip of sill to be as inconspicuous as possible.
3. Space weep holes formed from wicking material 16 inches o.c.
4. Trim wicking material flush with outside face of wall after mortar has set.

E. Place pea gravel in cavities as soon as practical to a height equal to height of first course above top of flashing, but not less than 2 inches (50 mm), to maintain drainage.

F. Place cavity drainage material in cavities to comply with configuration requirements for cavity drainage material in "Miscellaneous Masonry Accessories" Article.

G. Install vents in head joints in exterior wythes at spacing indicated. Use specified weep/vent products to form vents.

1. Close cavities off vertically and horizontally with blocking in manner indicated. Install through-wall flashing and weep holes above horizontal blocking.

3.13 REINFORCED UNIT MASONRY INSTALLATION

A. Temporary Formwork and Shores: Construct formwork and shores as needed to support reinforced masonry elements during construction.

1. Construct formwork to provide shape, line, and dimensions of completed masonry as indicated. Make forms sufficiently tight to prevent leakage of mortar and grout. Brace, tie, and support forms to maintain position and shape during construction and curing of reinforced masonry.
2. Do not remove forms and shores until reinforced masonry members have hardened sufficiently to carry their own weight and other loads that may be placed on them during construction.

B. Placing Reinforcement: Comply with requirements in ACI 530.1/ASCE 6/TMS 602.

C. Grouting: Do not place grout until entire height of masonry to be grouted has attained enough strength to resist grout pressure.

1. Comply with requirements in ACI 530.1/ASCE 6/TMS 602 for cleanouts and for grout placement, including minimum grout space and maximum pour height.
2. Limit height of vertical grout pours to not more than 60 inches.

3.14 FIELD QUALITY CONTROL

A. Testing and Inspecting: Owner will engage special inspectors to perform tests and inspections and prepare reports. Allow inspectors access to scaffolding and work areas, as needed to perform tests and inspections. Retesting of materials that fail to comply with specified requirements shall be done at Contractor's expense.

3.15 PARGING

A. Parge exterior faces of below-grade masonry walls, where indicated, in 2 uniform coats to a total thickness of 3/4 inch (19 mm). Dampen wall before applying first coat and scarify first coat to ensure full bond to subsequent coat.

B. Use a steel-trowel finish to produce a smooth, flat, dense surface with a maximum surface variation of 1/8 inch per foot (3 mm per 300 mm). Form a wash at top of parging and a cove at bottom.

C. Damp-cure parging for at least 24 hours and protect parging until cured.

3.16 REPAIRING, POINTING, AND CLEANING

A. Remove and replace masonry units that are loose, chipped, broken, stained, or otherwise damaged or that do not match adjoining units. Install new units to match adjoining units; install in fresh mortar, pointed to eliminate evidence of replacement.

B. Pointing: During the tooling of joints, enlarge voids and holes, except weep holes, and completely fill with mortar. Point up joints, including corners, openings, and adjacent construction, to provide a neat, uniform appearance. Prepare joints for sealant application, where indicated.

C. In-Progress Cleaning: Clean unit masonry as work progresses by dry brushing to remove mortar fins and smears before tooling joints.

D. Final Cleaning: After mortar is thoroughly set and cured, clean exposed masonry as follows:

1. Remove large mortar particles by hand with wooden paddles and nonmetallic scrape hoes or chisels.
2. Test cleaning methods on sample wall panel; leave one-half of panel uncleaned for comparison purposes. Obtain Architect's approval of sample cleaning before proceeding with cleaning of masonry.
3. Protect adjacent stone and nonmasonry surfaces from contact with cleaner by covering them with liquid strippable masking agent or polyethylene film and waterproof masking tape.
4. Wet wall surfaces with water before applying cleaners; remove cleaners promptly by rinsing surfaces thoroughly with clear water.
5. Clean brick by bucket-and-brush hand-cleaning method described in BIA Technical Notes 20.
6. Clean masonry with a proprietary acidic cleaner applied according to manufacturer's written instructions.
7. Clean concrete masonry by cleaning method indicated in NCMA TEK 8-2A applicable to type of stain on exposed surfaces.

3.17 MASONRY WASTE DISPOSAL

A. Salvageable Materials: Unless otherwise indicated, excess masonry materials are Contractor's property. At completion of unit masonry work, remove from Project site.

B. Waste Disposal as Fill Material: Dispose of clean masonry waste, including excess or soil-contaminated sand, waste mortar, and broken masonry units, by crushing and mixing with fill material as fill is placed.

1. Crush masonry waste to less than 4 inches (100 mm) in each dimension.
2. Mix masonry waste with at least two parts of specified fill material for each part of masonry waste. Fill material is specified in Section 312000 "Earth Moving."
3. Do not dispose of masonry waste as fill within 18 inches (450 mm) of finished grade.

C. Excess Masonry Waste: Remove excess clean masonry waste that cannot be used as fill, as described above, and other masonry waste, and legally dispose of off Owner's property.

END OF SECTION 042000

SECTION 047000

ARCHITECTURAL STONE VENEER

PART 1 GENERAL

1.1 SECTION INCLUDES

A. Architectural simulated stone veneer and trim.

1.2 RELATED SECTIONS

A. Section 05400 - Cold Formed Metal Framing.

B. Section 06160 - Sheathing.

C. Section 07600 - Flashing and Sheet Metal.

D. Section 07920 - Joint Sealants.

1.3 REFERENCES

A. American National Standards Institute (ANSI): ANSI A118.4 Specifications for Latex-Portland Cement Mortar.

B. American Society for Testing and Materials (ASTM):
1. ASTM C 39 - Standard Test Method for Compressive Strength of Cylindrical Concrete Specimens.
2. ASTM C 67 - Standard Test Methods for Sampling and Testing Brick and Structural Clay Tile.
3. ASTM C 144 - Standard Specification for Aggregate for Masonry Mortar.
4. ASTM C 177 - Standard Test Method for Steady-State Head Flux Measurements and Thermal Transmission Properties by Means of the Guarded-Hot-Plate Apparatus.
5. ASTM C 207 - Standard Specification for Hydrated Lime for Masonry Purposes.
6. ASTM C 270 - Standard Specification for Mortar for Unit Masonry.
7. ASTM C 482 - Standard Test Method for Bond Strength of Ceramic Tile to Portland Cement.
8. ASTM C 567 - Standard Test Method for Determining Density of Structural Lightweight Concrete.
9. ASTM C 847 - Standard Specification for Metal Lath.
10. ASTM C 932 - Standard Specification for Surface-Applied Bonding Compounds for Exterior Plastering.
11. ASTM C 979 - Standard Specification for Pigments for Integrally Colored Concrete.
12. ASTM C 1032 - Standard Specification for Woven Wire Plaster Base.
13. ASTM C 1059 - Standard Specification for Latex Agents for Bonding Fresh To Hardened Concrete.
14. ASTM D 226 - Standard Specification for Asphalt-Saturated Organic Felt Used in Roofing and Waterproofing.

C. International Code Council (ICC):
1. ICC Evaluation Service - Evaluation Report AC51- Acceptance Criteria for Precast Stone Veneers.

D. Underwriter's Laboratory (UL): Building Materials Directory.

1.4 SUBMITTALS

A. Submit under provisions of Section 01300.

B. Product Data: Masonry Veneer Manufacturers Association (MVMA) see masonryveneer.org:
   1. Preparation instructions.
   2. Storage and handling requirements.
   3. Installation methods.

C. Selection Samples: Standard sample board consisting of small-scale pieces of veneer units showing full range of textures and colors.

D. Verification Samples: Following initial sample selection submit "laid-up" sample board using the selected stone and mortar materials and showing the full range of colors expected in the finished Work; minimum sample size: 3 feet by 3 feet (1 m by 1 m).

E. Quality Assurance/Control Submittals:
   1. Qualifications:
      a. Proof of manufacturer qualifications.
      b. Proof of installer qualifications.
   2. Regulatory Requirements: Evaluation reports.
   3. Installation instructions for related materials.

F. Closeout Submittals: Reference Section 01780 - Closeout Submittals; submit following items:
   1. Maintenance Instructions.
   2. Special Warranties.

1.5 QUALITY ASSURANCE

A. Installer Qualifications: Experienced mason familiar with installation procedures for manufactured veneer.

B. Product Certifications:
   1. ICC Evaluation Service - Evaluation Report ESR-1215.
   2. UL - Classification listing in Building Materials Directory: UL 546T (F8002).

C. Mock-Up: Provide a mock-up for evaluation of final appearance.
   1. Prepare 4 foot by 4 foot (1220 mm by 1220 mm) sample at a location on the structure as selected by the Architect. Use approved selection sample materials and colors.
   2. Obtain Architect's approval.
   3. Protect and retain sample as a basis for approval of completed manufactured stone work. Approved sample may be incorporated into completed work.
   4. Do not proceed with remaining work until workmanship, color, and sheen are approved by Architect.
   5. Refinish mock-up area as required to produce acceptable work.

1.6 DELIVERY, STORAGE, AND HANDLING

A. Store products in manufacturer's unopened packaging until ready for installation.

B. Store and dispose of solvent-based materials, and materials used with solvent-based materials, in accordance with requirements of local authorities having jurisdiction..

1.7 PROJECT CONDITIONS

A. Maintain environmental conditions (temperature, humidity, and ventilation) within limits recommended by manufacturer for optimum results. Do not install products under environmental conditions outside manufacturer's absolute limits.

1.8 WARRANTY

A. Manufacturer warranty: Period of fifty years against manufacturing defects when used on structures conforming to local building codes and when installed in accordance with manufacturer's written instructions.
   1. Warranty coverage specifically excludes damage resulting from wall movement, settlement of the building, contact with chemicals or paint, discoloration due to contaminates, staining or oxidation.
   2. Warranty coverage is limited to replacement or repair of defective materials only and does not cover labor to remove or replace materials. Warranty coverage is limited to the original purchaser.

PART 2 PRODUCTS

2.1 MANUFACTURERS

a. Substitutions: Requests for substitutions shall be made in writing <u>at least ten days prior</u> to the date of the Bid Opening and must meet the requirements set forth in Instructions to Bidders.

b. Basis of Design Manufacturers:

1. El Dorado Stone – Mountain Ledge
   a. Series Accent Color: As selected from Manufacturer's full range
   b. Include matching corner pieces

2. Mountain Stone – Ledgestone
   a. Series Accent Color: As selected from Manufacturer's full range
   b. Include matching corner pieces

2.2 STONE VENEER:

A. Veneer Unit Properties: Precast stone veneer units and accent pieces consisting of Portland cement, lightweight aggregates, and mineral oxide pigments.
   1. Compressive Strength: ASTM C 192 and ASTM C 39¸ 5 sample average: greater than 1¸800 psi (12.4MPa).
   2. Shear Bond: ÅSTM C 482: 50 psi (345kPa).
   3. Water Absorption: ICC Evaluation Service AC 51 (Section 4.6 and Table 2): Less than 22 percent when density is less than 85 PCF; less than 18 percent when density is less than 105 PCF.
   4. Freeze-Thaw Test: ÅSTM C 67: Less than 3 percent weight loss and no disintegration.
   5. Thermal Resistance: ÅSTM C 177: 0.473 at 1.387 inches (35 mm) thick.

2.3 RELATED MATERIALS

A. Weather Resistive Barrier: ASTM D 226, Type 1, No. 15, non-perforated asphalt-saturated felt paper.

B. Reinforcing: Complying with code agency requirements for the type of substrate over which stone veneer is installed.
   1. ÅSTM C 847, 2.5lb/yd2 (1.4kg/m2) galvanized expanded metal lath.
   2. ASTM C 847¸ 3.4lb (1.8 kg/m2) galvanized 3/8 inch (9.5 mm) rib lath.
   3. ÅSTM C 1032, 18 gauge (1.3 mm) woven wire mesh.

C. Mortar:
   1. Cement: Cement complying with ASTM C 270.
   2. Lime: ASTM C 207.

3. Sand: ÅSTM C 144¸ natural or manufactured sand.
4. Color Pigment: ASTM C 979¸ mineral oxide pigments.
5. Water: Potable.
6. Pre-Packaged Latex-Portland Cement Mortar: ANSI A118.4.

D. Bonding Agent:
1. Exterior integral bonding agent meeting ASTM C 932.

E. Sealer:
1. Water based silane or siloxane masonry sealer¸ clear.

2.4 MORTAR

A. Standard Installation (Grouted Joints):
1. Mix mortar in accordance with ÅSTM C 270¸ Type N or S.
a. Add color pigment in grout joint mortar in accordance with pigment manufacturer's instructions.

PART 3 EXECUTION

3.1 EXAMINATION

A. Do not begin installation until substrates have been properly prepared.

B. Examine substrates upon which work will be installed.

C. Commencement of work by installer is acceptance of substrate.

D. If substrate preparation is the responsibility of another installer, notify Architect of unsatisfactory preparation before proceeding.

3.2 PREPARATION

A. Protection: Protect adjacent work from contact with mortar.

B. Clean surfaces thoroughly prior to installation.

C. Prepare surfaces using the methods recommended by the manufacturer for achieving the best result for the substrate under the project conditions.

3.3 INSTALLATION

A. Install in accordance with manufacturer's instructions.

B. Install and clean stone in accordance with Standard Installation Grouted Joint.

C. Apply sealer in accordance with sealer manufacturer's installation instructions.

3.4 PROTECTION

A. Protect installed products until completion of project.

B. Touch-up, repair or replace damaged products before Substantial Completion.

3.5 FIELD QUALITY CONTROL

A. Manufacturer's Field Services: Manufacturer's Field Service Representative shall make periodic site visits for installation consultation and inspection as requested by Owner.

3.6 CLEANING

A. Remove protective coverings from adjacent work.

B. Cleaning Veneer Units:
   1. Wash with soft bristle brush and water/granulated detergent solution.
   2. Rinse immediately with clean water.

C. Removing Efflorescence:
   1. Allow veneer to dry thoroughly.
   2. Scrub with soft bristle brush and clean water.
   3. Rinse immediately with clean water; allow to dry.
   4. If efflorescence is still visible, repeat above procedure using a solution of 1 part household vinegar and 5 parts water.
   5. Rinse immediately with clean water.

END OF SECTION

SECTION 047200 - CAST STONE MASONRY

PART 1 - GENERAL

1.1 RELATED DOCUMENTS

A. Drawings and general provisions of the Contract, including General and Supplementary Conditions and Division 01 Specification Sections, apply to this Section.

1.2 SUMMARY

A. Section Includes:

1. Cast stone trim including but not limited to the following:

a. Window sills.
b. Lintels.
c. Wall caps.
d. Date stone (with incised date)

B. Related Sections:

1. Section 042000 "Unit Masonry" for installing cast stone units in unit masonry.

1.3 ACTION SUBMITTALS

A. Product Data: For each type of product indicated.

1. For cast stone units, include construction details, material descriptions, dimensions of individual components and profiles, and finishes.

B. Shop Drawings: Show fabrication and installation details for cast stone units. Include dimensions, details of reinforcement and anchorages if any, and indication of finished faces.

1. Include building elevations showing layout of units and locations of joints and anchors.
2. Submit calculations sealed by a Delaware Professional Engineer for all cast stone units and anchorages.

C. Samples for Initial Selection: For colored mortar.

D. Samples for Verification:

1. For each color and texture of cast stone required, 10 inches (250 mm) square in size.
2. For colored mortar. Make Samples using same sand and mortar ingredients to be used on Project. Label Samples to indicated types and amounts of pigments used.

1.4 INFORMATIONAL SUBMITTALS

A. Material Test Reports: For each mix required to produce cast stone, based on testing according to ASTM C 1364, including test for resistance to freezing and thawing.

1.5 QUALITY ASSURANCE

A. Manufacturer Qualifications: A qualified manufacturer of cast stone units similar to those indicated for this project that has sufficient production capacity to manufacture required units, and is a plant certified by the Cast Stone Institute.

B. Testing Agency Qualifications: Qualified according to ASTM E 329 for testing indicated.

C. Source Limitations for Cast Stone: Obtain cast stone units through single source from single manufacturer.

D. Source Limitations for Mortar Materials: Obtain mortar ingredients of a uniform quality, including color, from one manufacturer for each cementitious component and from one source or producer for each aggregate.

E. Mockups: Furnish cast stone for installation in mockups specified in Section 042000 "Unit Masonry."

1.6 DELIVERY, STORAGE, AND HANDLING

A. Coordinate delivery of cast stone with unit masonry work to avoid delaying the Work and to minimize the need for on-site storage.

B. Pack, handle, and ship cast stone units in suitable packs or pallets.

1. Lift with wide-belt slings; do not use wire rope or ropes that might cause staining. Move cast stone units, if required, using dollies with wood supports.
2. Store cast stone units on wood skids or pallets with nonstaining, waterproof covers, securely tied. Arrange to distribute weight evenly and to prevent damage to units. Ventilate under covers to prevent condensation.

C. Store cementitious materials on elevated platforms, under cover, and in a dry location. Do not use cementitious materials that have become damp.

D. Store mortar aggregates where grading and other required characteristics can be maintained and contamination can be avoided.

1.7 PROJECT CONDITIONS

A. Cold-Weather Requirements: Do not use frozen materials or materials mixed or coated with ice or frost. Do not build on frozen substrates. Comply with cold-weather construction requirements in ACI 530.1/ASCE 6/TMS 602.

1. Cold-Weather Cleaning: Use liquid cleaning methods only when air temperature is 40 deg F (4 deg C) and above and will remain so until cast stone has dried, but no fewer than seven days after completing cleaning.

B. Hot-Weather Requirements: Comply with hot-weather construction requirements in ACI 530.1/ASCE 6/TMS 602.

PART 2 - PRODUCTS

2.1 MANUFACTURER'S

A. Available Manufacturers: Subject to compliance with requirements, manufacturers offering products that may be incorporated into the Work include:

1. Advanced Cast Stone, Inc.
2. Cast Stone Systems, Inc.
3. Reading Rock, Inc.

B. Substitutions: Requests for substitutions shall be made in writing at least ten days prior to the date of the Bid Opening and must meet the requirements set forth in Instructions to Bidders.

2.2 CAST STONE MATERIALS

A. General: Comply with ASTM C 1364 and the following:

B. Portland Cement: ASTM C 150, Type I or Type III, containing not more than 0.60 percent total alkali when tested according to ASTM C 114. Provide natural color or white cement as required to produce cast stone color indicated.

C. Coarse Aggregates: Granite, quartz, or limestone complying with ASTM C 33; gradation and colors as needed to produce required cast stone textures and colors.

D. Fine Aggregates: Natural sand or crushed stone complying with ASTM C 33, gradation and colors as needed to produce required cast stone textures and colors.

E. Admixtures: Use only admixtures specified or approved in writing by Architect.

1. Do not use admixtures that contain more than 0.1 percent water-soluble chloride ions by mass of cementitious materials. Do not use admixtures containing calcium chloride.
2. Use only admixtures that are certified by manufacturer to be compatible with cement and other admixtures used.
3. Air-Entraining Admixture: ASTM C 260. Add to mixes for units exposed to the exterior at manufacturer's prescribed rate to result in an air content of 4 to 6 percent, except do not add to zero-slump concrete mixes.

F. Reinforcement: Deformed steel bars complying with ASTM A 615/A 615M, Grade 60 (Grade 420). Use galvanized or epoxy-coated reinforcement when covered with less than 1-1/2 inches (38 mm) of cast stone material.

1. Epoxy Coating: ASTM A 775/A 775M.
2. Galvanized Coating: ASTM A 767/A 767M.

G. Embedded Anchors and Other Inserts: Fabricated from stainless steel complying with ASTM A 240/A 240M, ASTM A 276, or ASTM A 666, Type 304.

2.3 CAST STONE UNITS

A. Provide cast stone units complying with ASTM C 1364 using either the vibrant dry tamp or wet-cast method.

1. Provide units that are resistant to freezing and thawing as determined by laboratory testing according to ASTM C 666/C 666M, Procedure A, as modified by ASTM C 1364.

B. Fabricate units with sharp arris and accurately reproduced details, with indicated texture on all exposed surfaces unless otherwise indicated.

1. Slope exposed horizontal surfaces 1:12 to drain unless otherwise indicated.
2. Provide raised fillets at backs of sills and at ends indicated to be built into jambs.
3. Provide drips on projecting elements unless otherwise indicated.

C. Fabrication Tolerances:

1. Variation in Cross Section: Do not vary from indicated dimensions by more than 1/8 inch (3 mm).
2. Variation in Length: Do not vary from indicated dimensions by more than 1/360 of the length of unit or 1/8 inch (3 mm), whichever is greater, but in no case by more than 1/4 inch (6 mm).
3. Warp, Bow, and Twist: Not to exceed 1/360 of the length of unit or 1/8 inch (3 mm), whichever is greater.
4. Location of Grooves, False Joints, Holes, Anchorages, and Similar Features: Do not vary from indicated position by more than 1/8 inch (3 mm) on formed surfaces of units and 3/8 inch (10 mm) on unformed surfaces.

D. Cure units as follows:

1. Cure units in enclosed moist curing room at 95 to 100 percent relative humidity and temperature of 100 deg F (38 deg C) for 12 hours or 70 deg F (21 deg C) for 16 hours.
2. Keep units damp and continue curing to comply with one of the following:

   a. No fewer than five days at mean daily temperature of 70 deg F (21 deg C) or above.
   b. No fewer than six days at mean daily temperature of 60 deg F (16 deg C) or above.
   c. No fewer than seven days at mean daily temperature of 50 deg F (10 deg C) or above.
   d. No fewer than eight days at mean daily temperature of 45 deg F (7 deg C) or above.

E. Acid etch units after curing to remove cement film from surfaces to be exposed to view.

F. Colors and Textures: As selected by Architect from manufacturer's full range.

2.4 MORTAR MATERIALS

A. Provide mortar materials that comply with Section 042000 "Unit Masonry."

B. Water: Potable.

2.5 ACCESSORIES

A. Anchors: Type and size indicated, fabricated from Type 304 stainless steel complying with ASTM A 240/A 240M, ASTM A 276, or ASTM A 666.

B. Dowels: 1/2-inch- (12-mm-) diameter, round bars, fabricated from Type 304 stainless steel complying with ASTM A 240/A 240M, ASTM A 276, or ASTM A 666.

C. Proprietary Acidic Cleaner: Manufacturer's standard-strength cleaner designed for removing mortar/grout stains, efflorescence, and other new construction stains from new masonry without discoloring or damaging masonry surfaces. Use product expressly approved for intended use by cast stone manufacturer and expressly approved by cleaner manufacturer for use on cast stone and adjacent masonry materials.

1. Manufacturers: Subject to compliance with requirements, provide products by one of the following:

a. Diedrich Technologies, Inc.
b. EaCo Chem, Inc.
c. ProSoCo, Inc.

2.6 MORTAR MIXES

A. Comply with requirements in Section 042000 "Unit Masonry" for mortar mixes.

2.7 SOURCE QUALITY CONTROL

A. Engage a qualified independent testing agency to sample and test cast stone units according to ASTM C 1364.

1. Include one test for resistance to freezing and thawing.

PART 3 - EXECUTION

3.1 EXAMINATION

A. Examine substrates and conditions, with Installer present, for compliance with requirements for installation tolerances and other conditions affecting performance of work.

B. Proceed with installation only after unsatisfactory conditions have been corrected.

3.2 SETTING CAST STONE IN MORTAR

A. Install cast stone units to comply with requirements in Section 042000 "Unit Masonry."

B. Set cast stone as indicated on Drawings. Set units accurately in locations indicated with edges and faces aligned according to established relationships and indicated tolerances.

1. Install anchors, supports, fasteners, and other attachments indicated or necessary to secure units in place.
2. Coordinate installation of cast stone with installation of flashing specified in other Sections.

C. Wet joint surfaces thoroughly before applying mortar or setting in mortar.

D. Set units in full bed of mortar with full head joints unless otherwise indicated.

1. Set units with joints 3/8” wide unless otherwise indicated.
2. Build anchors and ties into mortar joints as units are set.
3. Fill dowel holes and anchor slots with mortar.
4. Fill collar joints solid as units are set.
5. Build concealed flashing into mortar joints as units are set.
6. Keep head joints in coping and other units with exposed horizontal surfaces open to receive sealant.
7. Keep joints at shelf angles open to receive sealant.

E. Rake out joints for pointing with mortar to depths of not less than 3/4 inch (19 mm). Rake joints to uniform depths with square bottoms and clean sides. Scrub faces of units to remove excess mortar as joints are raked.

F. Point mortar joints by placing and compacting mortar in layers not greater than 3/8 inch (10 mm). Compact each layer thoroughly and allow it to become thumbprint hard before applying next layer.

G. Tool exposed joints slightly concave when thumbprint hard, using a jointer larger than joint thickness unless otherwise indicated.

H. Provide sealant joints at copings and other horizontal surfaces, at expansion, control, and pressure-relieving joints, and at locations indicated.

1. Keep joints free of mortar and other rigid materials.
2. Build in compressible foam-plastic joint fillers where indicated.
3. Form joint of width indicated, but not less than 3/8 inch (10 mm).
4. Prime cast stone surfaces to receive sealant and install compressible backer rod in joints before applying sealant unless otherwise indicated.
5. Prepare and apply sealant of type and at locations indicated to comply with applicable requirements in Section 079200 "Joint Sealants."

3.3 SETTING ANCHORED CAST STONE WITH SEALANT-FILLED JOINTS

A. Set cast stone as indicated on Drawings. Set units accurately in locations indicated with edges and faces aligned according to established relationships and indicated tolerances.

1. Install anchors, supports, fasteners, and other attachments indicated or necessary to secure units in place.
2. Shim and adjust anchors, supports, and accessories to set cast stone in locations indicated with uniform joints.

B. Keep cavities open where unfilled space is indicated between back of cast stone units and backup wall; do not fill cavities with mortar or grout.

C. Fill anchor holes with sealant.

1. Where dowel holes occur at pressure-relieving joints, provide compressible material at ends of dowels.

D. Set cast stone supported on clip or continuous angles on resilient setting shims. Use material of thickness required to maintain uniform joint widths. Hold shims back from face of cast stone a distance at least equal to width of joint.

E. Keep joints free of mortar and other rigid materials. Remove temporary shims and spacers from joints after anchors and supports are secured in place and cast stone units are anchored. Do not begin sealant installation until temporary shims and spacers are removed.

1. Form open joint of width indicated, but not less than 3/8 inch (10 mm).

F. Prime cast stone surfaces to receive sealant and install compressible backer rod in joints before applying sealant unless otherwise indicated.

G. Prepare and apply sealant of type and at locations indicated to comply with applicable requirements in Section 079200 "Joint Sealants."

3.4 INSTALLATION TOLERANCES

A. Variation from Plumb: Do not exceed 1/8 inch in 10 feet (3 mm in 3 m), 1/4 inch in 20 feet (6 mm in 6 m), or 1/2 inch (12 mm) maximum.

B. Variation from Level: Do not exceed 1/8 inch in 10 feet (3 mm in 3 m), 1/4 inch in 20 feet (6 mm in 6 m), or 1/2 inch (12 mm) maximum.

C. Variation in Joint Width: Do not vary joint thickness more than 1/8 inch in 36 inches (3 mm in 900 mm) or one-fourth of nominal joint width, whichever is less.

D. Variation in Plane between Adjacent Surfaces (Lipping): Do not vary from flush alignment with adjacent units or adjacent surfaces indicated to be flush with units by more than 1/16 inch (1.5 mm), except where variation is due to warpage of units within tolerances specified.

3.5 ADJUSTING AND CLEANING

A. Remove and replace stained and otherwise damaged units and units not matching approved Samples. Cast stone may be repaired if methods and results are approved by Architect.

B. Replace units in a manner that results in cast stone matching approved Samples, complying with other requirements, and showing no evidence of replacement.

C. In-Progress Cleaning: Clean cast stone as work progresses.

1. Remove mortar fins and smears before tooling joints.
2. Remove excess sealant immediately, including spills, smears, and spatter.

D. Final Cleaning: After mortar is thoroughly set and cured, clean exposed cast stone as follows:

1. Remove large mortar particles by hand with wooden paddles and nonmetallic scrape hoes or chisels.
2. Test cleaning methods on sample; leave one sample uncleaned for comparison purposes. Obtain Architect's approval of sample cleaning before proceeding with cleaning of cast stone.
3. Protect adjacent surfaces from contact with cleaner by covering them with liquid strippable masking agent or polyethylene film and waterproof masking tape.
4. Wet surfaces with water before applying cleaners; remove cleaners promptly by rinsing thoroughly with clear water.
5. Clean cast stone by bucket-and-brush hand-cleaning method described in BIA Technical Notes 20.
6. Clean cast stone with proprietary acidic cleaner applied according to manufacturer's written instructions.

END OF SECTION 047200

SECTION 047300 - CAST STONE CONCRETE MASONRY VENEER

PART 1 - GENERAL

1.1 RELATED DOCUMENTS

A. Drawings and general provisions of the Contract, including General and Supplementary Conditions and Division 1 Specification Sections, apply to this Section.

1.2 SUMMARY

A. This Section includes the following:

1. Cast stone concrete masonry veneer (Architectural Masonry Veneer).

B. Related Sections include the following:

1. Division 4 Section "Unit Masonry" for mortar and grout.
2. Division 7 Section “Joint Sealants.”
3. Division 4 Section "Cast Stone"

1.3 DEFINITIONS

A. Cast Stone Concrete Masonry Veneer: An architectural stone unit manufactured to copy fine grain texture and color of natural cut stone. Meets ASTM C 90 requirements.

B. Dry Cast Concrete Products: Manufactured from zero-slump concrete.

C. Machine Casting Method: Vibratory compaction by machine of earth-moist, zero-slump concrete against rigid mold until it is densely compacted.

1.4 SUBMITTALS

A. Product Data: Include construction details, material descriptions, dimensions of individual components and profiles, and finishes for cast stone units.

B. Shop Drawings: Show fabrication and installation details for cast stone units. Include dimensions; details for reinforcement and anchorages, if any; and indication of finished faces.

1. Include building elevations showing layout of units and locations of joints and anchors.

C. Samples for Verification:

1. For each color and texture of cast stone required, 12 inches (305 mm) square in size.

2. For each mortar color required, showing the full range expected in the finished construction. Make samples using the same sand and mortar ingredients to be used on Project. Label samples to indicate type and amount of colorant used. Provide sample for masonry mock-up panel.

D. Qualification Data: For firms and persons specified in "Quality Assurance" Article to demonstrate their capabilities and experience. Include lists of completed projects with project names and addresses, names and addresses of architects and owners, and other information specified.

E. Material Test Reports: From a qualified testing agency indicating and interpreting test results for compliance of cast stone with requirements indicated.

1.5 QUALITY ASSURANCE

A. Manufacturer Qualifications:

1. Sufficient plant facilities to provide quality, shapes, quantities, and sizes of architectural stone units required without delaying progress of the Work.
2. Minimum of 10 years experience in producing masonry units.
3. Custom Cast Stone Series and Architectural Masonry Veneer Series are to be manufactured from a similar mix design to match color and texture.
4. Manufacturer shall have an internal Quality Assurance Testing Program with certified laboratory technician(s).

B. Mockup: Prior to installing cast stone concrete masonry, construct mockup wall panels to verify selections made under sample submittals and from sample panels to demonstrate aesthetic effects of materials and execution. Build mockups to comply with the following requirements, using materials indicated for final unit of Work.

1. Locate mockups on site in the locations indicated or, if not indicated, as directed by Architect.
2. Build mockup of typical wall area as shown on drawings.

   a. Include sealant-filled joint complying with requirements of Division 7 Section "Joint Sealants."

1.6 DELIVERY, STORAGE, AND HANDLING

A. Delivery:

1. Deliver architectural stone units secured to shipping pallets and protected from damage and discoloration.
2. Provide itemized shipping list.
3. Number each piece individually, as required, to match shop drawings and schedules.

B. Storage:

1. Store architectural stone units and installation materials in accordance with manufacturer's instructions.
2. Store architectural stone units on pallets with nonstaining, waterproof covers.
3. Do not double stack pallets.
4. Ventilate units under covers to prevent condensation.

5. Prevent contact with dirt and splashing.

C. Handling:

1. Protect architectural stone units, including corners and edges, during storage, handling, and installation to prevent chipping, cracking, staining, or other damage.
2. Handle long units at center and both ends simultaneously to prevent cracking.
3. Do not use pry bars or other equipment in a manner that could damage units.

1.7 COORDINATION

A. Coordinate production and delivery of cast stone with unit masonry work to minimize the need for on-site storage and to avoid delaying the Work.

PART 2 - PRODUCTS

2.1 MANUFACTURERS

A. Available Manufacturers: Subject to compliance with requirements, manufacturers offering products that may be incorporated into the Work include, but are not limited to, the following:

1. Reading Rock, Inc. (Basis of Design)

2. Advanced Cast Stone, Inc.

B. Substitutions: Requests for substitutions shall be made in writing at least ten days prior to the date of the Bid Opening and must meet the requirements set forth in Instructions to Bidders.

2.2 CAST STONE CONCRETE MASONRY VENEER (Architectural Masonry Veneer)

A. Compliance: ASTM C 90.

B. Casting Method: Machine.

C. Finish:

1. Type **(AMV-1)**: Size: 3-5/8 x 15-5/8 x 23-5/8 (WxHxL)

a. Include one of the following selections:

1) Reading Rock's Rockcast Architectural Masonry Veneer, Canyon Gray Smooth
2) Advanced Cast Stone equivalent product.
3)

2. Type **(AMV-2)**: Size: 3-5/8 x 7-5/8 x 23-5/8 (WxHxL)

a. Include one of the following selections:

1) Reading Rock's Rockcast Architectural Masonry Veneer, Canyon Gray Smooth
2) Advanced Cast Stone equivalent product
3)

3. Type **(AMV-3)**: Size: 3-5/8 x 3/8 x 23-5/8 (WxHxL)

a. Include one of the following selections:

1) Reading Rock's Rockcast Architectural Masonry Veneer, Canyon Gray Smooth
Advanced Cast Stone equivalent product.

D. Test Results:

1. Compressive Strength, ASTM C 140: 4,000 - 6,000 psi at 28 days.
2. Absorption, ASTM C 140: Less than 6 percent at 28 days.
3. Linear Shrinkage, ASTM C 426: Maximum .065 percent.
4. Density, ASTM C 140: Greater than 120 pounds per cubic foot.
5. Freeze-Thaw, ASTM C 666: Less than 5 percent cumulative mass loss after 300 cycles.

E. Curing: Cure in enclosed chamber at 95 percent relative humidity and 95 to 120 degrees F for 12 to 18 hours and yard cure for 350 degree-days.

2.3 ARCHITECTURAL MASONRY VENEER MATERIALS

A. Portland Cement: ASTM C 150, Type I or III. White and/or gray as required to match specified color.

B. Coarse Aggregates: ASTM C 33, except for gradation. Granite, quartz, or limestone.

C. Fine Aggregates: ASTM C 33, except for gradation. Manufactured or natural sands.

D. Pigments: ASTM C 979, except do not use carbon black pigments. Inorganic iron oxide pigments.

E. Water Reducing, Retarding, and Accelerating Admixtures: ASTM C 494.

F. Other admixtures: integral water repellents and other chemicals, for which no ASTM Standard exists, shall be previously established as suitable for use in concrete by proven field performance or through laboratory testing.

G. Water: Potable.

2.4 TEXTURE AND COLOR

A. General: Match texture and color of full-size sample on file with Architect.

B. Texture of Surfaces Exposed to View:

1. Fine-grained texture similar to natural stone and architectural stone units.
2. Approximately equal to approved sample when viewed in direct daylight at 10 feet.

C. Surface Air Voids:

1. Size: Maximum 1/32 inch.
2. Density: Less than 3 occurrences per any 1 square inch.
3. Viewing Conditions: Not obvious under direct daylight at 10 feet.

D. Finish:

2. Minor chips shall not be obvious under direct daylight at 20 feet, as determined by Architect.
3. The occurrence of crazing or efflorescence shall not constitute a cause for rejection.

E. Color Variation:

1. Viewing Conditions: Compare in direct daylight at 10 feet, between units of similar age, subjected to similar weathering conditions.

2.5 MORTAR

A. Mortar: As specified in Section 042000.

B. Mortar Materials: As specified in Section 042000.

2.6 ACCESSORIES

A. Anchors: Non-corrosive type, sized for conditions. Type 304 stainless steel.

B. Sealant: As specified in Section 079200.

C. Cleaner: Prosoco Sure Klean Custom Masonry Cleaner, Prosoco Sure Klean 600 Detergent, or Prosoco Sure Klean Vana Trol.

2.7 FABRICATION

A. Shapes: As indicated on drawings.

2.8 TOLERANCES

A. General: Manufacture architectural stone units within tolerances in accordance with ASTM C 90, unless otherwise specified.

B. Length, height, width: Do not deviate by more than plus or minus 1/8 inch from approved dimensions. These requirements do not apply to split faced units.

2.9 PRODUCTION QUALITY CONTROL

A. Mix Designs: Test new and existing mix designs for applicable compressive strength and absorption compliance before manufacturing architectural stone units.

B. Plant Production Testing: Tests to be conducted by certified laboratory testing technicians. Test from specimens selected at random from plant production in accordance with ASTM C 140.

PART 3 EXECUTION

3.1 EXAMINATION

A. Examine construction to receive architectural stone units. Notify Architect if construction is not acceptable. Do not begin installation until unacceptable conditions have been corrected.

B. Examine architectural stone units before installation. Do not install unacceptable units.

3.2 INSTALLATION

A. Install units in conjunction with masonry, as specified in Section 042000.

B. Pull units from multiple cubes during installation to minimize variation in color and help with natural blending.

C. Cut units using motor-driven masonry saws. Finished ends should be turned to the visible side and the saw cut turned to the inside of the mortar joint to hide exposed aggregates and saw marks.

D. Do not use pry bars or other equipment in a manner that could damage units.

E. Fill dowel holes and anchor slots completely with mortar or non-shrink grout.

F. Use Type N mortar (ASTM C 270), unless specified otherwise.

G. Per ACI 530.1, it is not necessary, nor recommended, to wet the units prior to installation.

H. Set units in full bed of mortar, unless otherwise indicated on the drawings.

I. Fill vertical joints with mortar.

J. Make joints 3/8 inch, unless otherwise indicated on the drawings.

K. Tuck point mortar joints to slight concave profile (unless specified otherwise).

L. Remove excess mortar immediately.

M. Remove mortar fins and smears before tooling joints.

N. Cover wainscot for protection and bond separation with plastic, felt paper or other approved products.

O. Cover freshly installed masonry products as required to assist with the curing process.

P. Sealant Joints:

1. As specified in Section 079200.
2. Prime ends of units, insert properly sized backing rod, and install sealant.
3. Provide sealant joints at following locations:
   a. Joints at relieving angles.
   b. Control and expansion joints.
   c. As indicated on the drawings.

3.3 TOLERANCES

A. Installation Tolerances:

1. Variation from Plumb: Do not exceed 1/8 inch in 5 feet or 1/4 inch in 20 feet or more.
2. Variation from Level: Do not exceed 1/8 inch in 5 feet, 1/4 inch in 20 feet, or 3/8 inch maximum.
3. Variation in Joint Width: Do not vary joint thickness more than 1/8 inch or 1/4 of nominal joint width, whichever is greater.
4. Variation in Plane Between Adjacent Surfaces: Do not exceed 1/8-inch difference between planes of adjacent units or adjacent surfaces indicated to be flush with units.

3.4 CLEANING

A. Clean exposed units after mortar is thoroughly set and cured.

B. Perform test of cleaner on small area of 4’ x 4’ on each type and color and receive approval by Architect before full cleaning. Let test area dry 4 to 5 days before inspection. Keep test area for future comparison.

C. Clean units by wetting down the surface first, before using the specified cleaner (as specified in Section 2.7.C). Brush on cleaner, let dwell for 2 to 3 minutes. Reapply cleaner, scrub surface with masonry brush and rinse off thoroughly. Areas with heavy soiling use a wood block or non-metallic scraper.

D. Apply cleaner to units in accordance with cleaner manufacturer's instructions.

E. Do not use the following to clean units:

1. Muriatic acid.
2. Power washing.
3. Sandblasting.
4. Harsh cleaning materials or methods that would damage or discolor surfaces.

3.5 REPAIR

A. Repair chips and other surface damage noticeable when viewed in direct daylight at 20 feet.

B. Repair with touchup materials provided by manufacturer in accordance with manufacturer's instructions.

C. Repair methods and results to be approved by Architect.

3.6 INSPECTION AND ACCEPTANCE

A. Inspect completed installation in accordance with ACI 530 requirements.

3.7 PROTECTION

A. Protect installed units from splashing, stains, mortar, and other damage.

END OF SECTION 047300

SECTION 051200 - STRUCTURAL STEEL FRAMING

PART 1 - GENERAL

1.1 RELATED DOCUMENTS

A. Drawings and general provisions of the Contract, including General and Supplementary Conditions and Division 01 Specification Sections, apply to this Section.

1.2 SUMMARY

A. Section Includes:

1. Structural steel.
2. Field-installed shear connectors.
3. Grout.

B. Related Requirements:

1. Section 051213 "Architecturally Exposed Structural Steel Framing" for additional requirements for architecturally exposed structural steel.
2. Section 053100 "Steel Decking" for field installation of shear connectors through deck.
3. Section 055000 "Metal Fabrications" for miscellaneous steel fabrications and other steel items not defined as structural steel.
4. Section 099113 "Exterior Painting" and Section 099123 "Interior Painting" for surface-preparation and priming requirements.

1.3 DEFINITIONS

A. Structural Steel: Elements of the structural frame indicated on Drawings and as described in AISC 303, "Code of Standard Practice for Steel Buildings and Bridges."

B. Seismic-Load-Resisting System: Elements of structural-steel frame designated as "SLRS" or along grid lines designated as "SLRS" on Drawings, including columns, beams, and braces and their connections.

C. Heavy Sections: Rolled and built-up sections as follows:

1. Shapes included in ASTM A 6/A 6M with flanges thicker than 1-1/2 inches (38 mm).
2. Welded built-up members with plates thicker than 2 inches (50 mm).
3. Column base plates thicker than 2 inches (50 mm).

D. Protected Zone: Structural members or portions of structural members indicated as "Protected Zone" on Drawings. Connections of structural and nonstructural elements to protected zones are limited.

E. Demand Critical Welds: Those welds, the failure of which would result in significant degradation of the strength and stiffness of the Seismic-Load-Resisting System and which are indicated as "Demand Critical" or "Seismic Critical" on Drawings.

1.4 COORDINATION

A. Coordinate selection of shop primers with topcoats to be applied over them. Comply with paint and coating manufacturers' written recommendations to ensure that shop primers and topcoats are compatible with one another.

B. Coordinate installation of anchorage items to be embedded in or attached to other construction without delaying the Work. Provide setting diagrams, sheet metal templates, instructions, and directions for installation.

1.5 PREINSTALLATION MEETINGS

A. Preinstallation Conference: Conduct conference at Project site.

1.6 ACTION SUBMITTALS

A. Product Data: For each type of product.

B. Shop Drawings: Show fabrication of structural-steel components.

1. Include details of cuts, connections, splices, camber, holes, and other pertinent data.
2. Include embedment Drawings.
3. Indicate welds by standard AWS symbols, distinguishing between shop and field welds, and show size, length, and type of each weld. Show backing bars that are to be removed and supplemental fillet welds where backing bars are to remain.
4. Indicate type, size, and length of bolts, distinguishing between shop and field bolts. Identify pretensioned and slip-critical, high-strength bolted connections.
5. Identify members and connections of the Seismic-Load-Resisting System.
6. Indicate locations and dimensions of protected zones.
7. Identify demand critical welds.

C. Welding Procedure Specifications (WPSs) and Procedure Qualification Records (PQRs): Provide according to AWS D1.1/D1.1M, "Structural Welding Code - Steel," for each welded joint whether prequalified or qualified by testing, including the following:

1. Power source (constant current or constant voltage).
2. Electrode manufacturer and trade name, for demand critical welds.

D. Delegated-Design Submittal: For structural-steel connections indicated to comply with design loads, include analysis data signed and sealed by the qualified professional engineer responsible for their preparation.

1.7 INFORMATIONAL SUBMITTALS

A. Welding certificates.

B. Paint Compatibility Certificates: From manufacturers of topcoats applied over shop primers, certifying that shop primers are compatible with topcoats.

C. Mill test reports for structural steel, including chemical and physical properties.

D. Product Test Reports: For the following:

1. Bolts, nuts, and washers including mechanical properties and chemical analysis.
2. Direct-tension indicators.
3. Tension-control, high-strength, bolt-nut-washer assemblies.
4. Shear stud connectors.
5. Shop primers.
6. Nonshrink grout.

E. Survey of existing conditions.

F. Source quality-control reports.

G. Field quality-control and special inspection reports.

1.8 QUALITY ASSURANCE

A. Welding Qualifications: Qualify procedures and personnel according to AWS D1.1/D1.1M, "Structural Welding Code - Steel."

1. Welders and welding operators performing work on bottom-flange, demand-critical welds shall pass the supplemental welder qualification testing, as required by AWS D1.8/D1.8M. FCAW-S and FCAW-G shall be considered separate processes for welding personnel qualification.

B. Comply with applicable provisions of the following specifications and documents:

1. AISC 303.
2. AISC 341 and AISC 341s1.
3. AISC 360.
4. RCSC's "Specification for Structural Joints Using ASTM A 325 or A 490 Bolts."

1.9 DELIVERY, STORAGE, AND HANDLING

A. Store materials to permit easy access for inspection and identification. Keep steel members off ground and spaced by using pallets, dunnage, or other supports and spacers. Protect steel members and packaged materials from corrosion and deterioration.

1. Do not store materials on structure in a manner that might cause distortion, damage, or overload to members or supporting structures. Repair or replace damaged materials or structures as directed.

B. Store fasteners in a protected place in sealed containers with manufacturer's labels intact.

1. Fasteners may be repackaged provided Owner's testing and inspecting agency observes repackaging and seals containers.
2. Clean and relubricate bolts and nuts that become dry or rusty before use.
3. Comply with manufacturers' written recommendations for cleaning and lubricating ASTM F 1852 fasteners and for retesting fasteners after lubrication.

PART 2 - PRODUCTS

2.1 PERFORMANCE REQUIREMENTS

A. Connections: Provide details of simple shear connections required by the Contract Documents to be selected or completed by structural-steel fabricator, to withstand loads indicated and comply with other information and restrictions indicated.

1. Select and complete connections using schematic details indicated and AISC 360.
2. Use Allowable Stress Design; data are given at service-load level.

B. Moment Connections: Type PR, partially restrained.

C. Construction: Combined system of moment frame and shear walls.

2.2 STRUCTURAL-STEEL MATERIALS

A. Recycled Content of Steel Products: Postconsumer recycled content plus one-half of preconsumer recycled content not less than 25 percent.

B. W-Shapes: ASTM A 992/A 992M, Grade 50 (345).

C. Channels, Angles: ASTM A 36/A 36M.

D. Plate and Bar: ASTM A 36/A 36M.

E. Corrosion-Resisting Structural-Steel Shapes, Plates, and Bars: ASTM A 588/A 588M, Grade 50 (345).

F. Cold-Formed Hollow Structural Sections: ASTM A 500/A 500M, Grade B, structural tubing.

G. Corrosion-Resisting, Cold-Formed Hollow Structural Sections: ASTM A 847/A 847M, structural tubing.

H. Steel Pipe: ASTM A 53/A 53M, Type E or Type S, Grade B.

1. Weight Class: See drawings.
2. Finish: See drawings.

I. Welding Electrodes: Comply with AWS requirements.

2.3 BOLTS, CONNECTORS, AND ANCHORS

A. High-Strength Bolts, Nuts, and Washers: ASTM A 325 (ASTM A 325M), Type 1, heavy-hex steel structural bolts; ASTM A 563, Grade C, (ASTM A 563M, Class 8S) heavy-hex carbon-steel nuts; and ASTM F 436 (ASTM F 436M), Type 1, hardened carbon-steel washers; all with plain finish.

1. Direct-Tension Indicators: ASTM F 959, Type 325 (ASTM F 959M, Type 8.8), compressible-washer type with plain finish.

B. High-Strength Bolts, Nuts, and Washers: ASTM A 490 (ASTM A 490M), Type 1, heavy-hex steel structural bolts or tension-control, bolt-nut-washer assemblies with splined ends; ASTM A 563, Grade DH, (ASTM A 563M, Class 10S) heavy-hex carbon-steel nuts; and ASTM F 436 (ASTM F 436M), Type 1, hardened carbon-steel washers with plain finish.

1. Direct-Tension Indicators: ASTM F 959, Type 490 (ASTM F 959M, Type 10.9), compressible-washer type with plain finish.

C. Zinc-Coated High-Strength Bolts, Nuts, and Washers: ASTM A 325 (ASTM A 325M), Type 1, heavy-hex steel structural bolts; ASTM A 563, Grade DH (ASTM A 563M, Class 10S) heavy-hex carbon-steel nuts; and ASTM F 436 (ASTM F 436M), Type 1, hardened carbon-steel washers.

1. Finish: Hot-dip zinc coating.

D. Tension-Control, High-Strength Bolt-Nut-Washer Assemblies: ASTM F 1852, Type 1, heavy-hex head assemblies consisting of steel structural bolts with splined ends, heavy-hex carbon-steel nuts, and hardened carbon-steel washers.

1. Finish: Plain.

E. Shear Connectors: ASTM A 108, Grades 1015 through 1020, headed-stud type, cold-finished carbon steel; AWS D1.1/D1.1M, Type B.

F. Unheaded Anchor Rods: ASTM F 1554, Grade 36.

1. Configuration: Hooked.
2. Nuts: ASTM A 563 (ASTM A 563M) heavy-hex carbon steel.
3. Plate Washers: ASTM A 36/A 36M carbon steel.
4. Washers: ASTM F 436 (ASTM F 436M), Type 1, hardened carbon steel.
5. Finish: Plain.

G. Headed Anchor Rods: ASTM F 1554, Grade 36 straight.

1. Nuts: ASTM A 563 (ASTM A 563M) heavy-hex carbon steel.
2. Plate Washers: ASTM A 36/A 36M carbon steel.
3. Washers: ASTM F 436 (ASTM F 436M), Type 1, hardened carbon steel.
4. Finish: Plain or Hot-dip zinc coating, ASTM A 153/A 153M, Class C.

H. Threaded Rods: ASTM A 36/A 36M.

1. Nuts: ASTM A 563 (ASTM A 563M) heavy-hex carbon steel.
2. Washers: ASTM F 436 (ASTM F 436M), Type 1, hardened.
3. Finish: Plain or Hot-dip zinc coating, ASTM A 153/A 153M, Class C.

I. Clevises and Turnbuckles: Made from cold-finished carbon steel bars, ASTM A 108, Grade 1035.

J. Eye Bolts and Nuts: Made from cold-finished carbon steel bars, ASTM A 108, Grade 1030.

K. Sleeve Nuts: Made from cold-finished carbon steel bars, ASTM A 108, Grade 1018.

2.4 PRIMER

A. Low-Emitting Materials: Paints and coatings shall comply with the testing and product requirements of the California Department of Public Health's (formerly, the California Department of Health Services') "Standard Method for the Testing and Evaluation of Volatile Organic Chemical Emissions from Indoor Sources Using Environmental Chambers."

B. Primer: Comply with Section 099113 "Exterior Painting" and Section 099123 "Interior Painting."

C. Primer: Fabricator's standard lead- and chromate-free, nonasphaltic, rust-inhibiting primer complying with MPI#79 unless indicated to be finish painted.

D. Galvanizing Repair Paint: MPI#18, MPI#19, or SSPC-Paint 20.

2.5 GROUT

A. Metallic, Shrinkage-Resistant Grout: ASTM C 1107/C 1107M, factory-packaged, metallic aggregate grout, mixed with water to consistency suitable for application and a 30-minute working time.

B. Nonmetallic, Shrinkage-Resistant Grout: ASTM C 1107/C 1107M, factory-packaged, nonmetallic aggregate grout, noncorrosive and nonstaining, mixed with water to consistency suitable for application and a 30-minute working time.

2.6 FABRICATION

A. Structural Steel: Fabricate and assemble in shop to greatest extent possible. Fabricate according to AISC 303, "Code of Standard Practice for Steel Buildings and Bridges," and to AISC 360.

1. Camber structural-steel members where indicated.
2. Fabricate beams with rolling camber up.
3. Identify high-strength structural steel according to ASTM A 6/A 6M and maintain markings until structural steel has been erected.
4. Mark and match-mark materials for field assembly.
5. Complete structural-steel assemblies, including welding of units, before starting shop-priming operations.

B. Thermal Cutting: Perform thermal cutting by machine to greatest extent possible.

1. Plane thermally cut edges to be welded to comply with requirements in AWS D1.1/D1.1M.

C. Bolt Holes: Cut, drill, or punch standard bolt holes perpendicular to metal surfaces.

D. Finishing: Accurately finish ends of columns and other members transmitting bearing loads.

E. Cleaning: Clean and prepare steel surfaces that are to remain unpainted according to SSPC-SP 1, "Solvent Cleaning.", SSPC-SP 2, "Hand Tool Cleaning." Or SSPC-SP 3, "Power Tool Cleaning."

F. Shear Connectors: Prepare steel surfaces as recommended by manufacturer of shear connectors. Use automatic end welding of headed-stud shear connectors according to AWS D1.1/D1.1M and manufacturer's written instructions.

G. Steel Wall-Opening Framing: Select true and straight members for fabricating steel wall-opening framing to be attached to structural-steel frame. Straighten as required to provide uniform, square, and true members in completed wall framing. Build up welded framing, weld exposed joints continuously, and grind smooth.

H. Welded Door Frames: Build up welded door frames attached to structural-steel frame. Weld exposed joints continuously and grind smooth. Plug-weld fixed steel bar stops to frames. Secure removable stops to frames with countersunk machine screws, uniformly spaced not more than 10 inches (250 mm) o.c. unless otherwise indicated.

I. Holes: Provide holes required for securing other work to structural steel and for other work to pass through steel members.

1. Cut, drill, or punch holes perpendicular to steel surfaces. Do not thermally cut bolt holes or enlarge holes by burning.
2. Baseplate Holes: Cut, drill, mechanically thermal cut, or punch holes perpendicular to steel surfaces.
3. Weld threaded nuts to framing and other specialty items indicated to receive other work.

2.7 SHOP CONNECTIONS

A. High-Strength Bolts: Shop install high-strength bolts according to RCSC's "Specification for Structural Joints Using ASTM A 325 or A 490 Bolts" for type of bolt and type of joint specified.

1. Joint Type: Snug tightened unless noted otherwise on drawing.

B. Weld Connections: Comply with AWS D1.1/D1.1M and AWS D1.8/D1.8M for tolerances, appearances, welding procedure specifications, weld quality, and methods used in correcting welding work.

1. Assemble and weld built-up sections by methods that maintain true alignment of axes without exceeding tolerances in AISC 303 for mill material.

2.8 SHOP PRIMING

A. Shop prime steel surfaces except the following:

1. Surfaces embedded in concrete or mortar. Extend priming of partially embedded members to a depth of 2 inches (50 mm).
2. Surfaces to be field welded.
3. Surfaces of high-strength bolted, slip-critical connections.
4. Surfaces to receive sprayed fire-resistive materials (applied fireproofing).
5. Galvanized surfaces.

B. Surface Preparation: Clean surfaces to be painted. Remove loose rust and mill scale and spatter, slag, or flux deposits. Prepare surfaces according to the following specifications and standards:

1. SSPC-SP 2, "Hand Tool Cleaning."
2. SSPC-SP 3, "Power Tool Cleaning."
3. SSPC-SP 7/NACE No. 4, "Brush-off Blast Cleaning."
4. SSPC-SP 11, "Power Tool Cleaning to Bare Metal."
5. SSPC-SP 14/NACE No. 8, "Industrial Blast Cleaning."
6. SSPC-SP 6/NACE No. 3, "Commercial Blast Cleaning."
7. SSPC-SP 10/NACE No. 2, "Near-White Blast Cleaning."
8. SSPC-SP 5/NACE No. 1, "White Metal Blast Cleaning."
9. SSPC-SP 8, "Pickling."

C. Priming: Immediately after surface preparation, apply primer according to manufacturer's written instructions and at rate recommended by SSPC to provide a minimum dry film thickness of 1.5 mils (0.038 mm). Use priming methods that result in full coverage of joints, corners, edges, and exposed surfaces.

1. Stripe paint corners, crevices, bolts, welds, and sharp edges.

2. Apply two coats of shop paint to surfaces that are inaccessible after assembly or erection. Change color of second coat to distinguish it from first.

D. Painting: Prepare steel and apply a one-coat, nonasphaltic primer complying with SSPC-PS Guide 7.00, "Painting System Guide 7.00: Guide for Selecting One-Coat Shop Painting Systems," to provide a dry film thickness of not less than 1.5 mils (0.038 mm).

2.9 GALVANIZING

A. Hot-Dip Galvanized Finish: Apply zinc coating by the hot-dip process to structural steel according to ASTM A 123/A 123M.

1. Fill vent and drain holes that are exposed in the finished Work unless they function as weep holes, by plugging with zinc solder and filing off smooth.
2. Galvanize lintels, shelf angles and welded door frames attached to structural-steel frame and located in exterior walls.

2.10 SOURCE QUALITY CONTROL

A. Testing Agency: Owner will engage a qualified testing agency to perform shop tests and inspections.

1. Provide testing agency with access to places where structural-steel work is being fabricated or produced to perform tests and inspections.

B. Bolted Connections: Inspect and test shop-bolted connections according to RCSC's "Specification for Structural Joints Using ASTM A 325 or A 490 Bolts."

C. Welded Connections: Visually inspect shop-welded connections according to AWS D1.1/D1.1M and the following inspection procedures, at testing agency's option:

1. Liquid Penetrant Inspection: ASTM E 165.
2. Magnetic Particle Inspection: ASTM E 709; performed on root pass and on finished weld. Cracks or zones of incomplete fusion or penetration are not accepted.
3. Ultrasonic Inspection: ASTM E 164.
4. Radiographic Inspection: ASTM E 94.

D. In addition to visual inspection, test and inspect shop-welded shear connectors according to requirements in AWS D1.1/D1.1M for stud welding and as follows:

1. Perform bend tests if visual inspections reveal either a less-than-continuous 360-degree flash or welding repairs to any shear connector.
2. Conduct tests according to requirements in AWS D1.1/D1.1M on additional shear connectors if weld fracture occurs on shear connectors already tested.

E. Prepare test and inspection reports.

PART 3 - EXECUTION

3.1 EXAMINATION

A. Verify, with certified steel erector present, elevations of concrete- and masonry-bearing surfaces and locations of anchor rods, bearing plates, and other embedments for compliance with requirements.

1. Prepare a certified survey of existing conditions. Include bearing surfaces, anchor rods, bearing plates, and other embedments showing dimensions, locations, angles, and elevations.

B. Proceed with installation only after unsatisfactory conditions have been corrected.

3.2 PREPARATION

A. Provide temporary shores, guys, braces, and other supports during erection to keep structural steel secure, plumb, and in alignment against temporary construction loads and loads equal in intensity to design loads. Remove temporary supports when permanent structural steel, connections, and bracing are in place unless otherwise indicated.

1. Do not remove temporary shoring supporting composite deck construction until cast-in-place concrete has attained its design compressive strength.

3.3 ERECTION

A. Set structural steel accurately in locations and to elevations indicated and according to AISC 303 and AISC 360.

B. Baseplates Bearing Plates and Leveling Plates: Clean concrete- and masonry-bearing surfaces of bond-reducing materials, and roughen surfaces prior to setting plates. Clean bottom surface of plates.

1. Set plates for structural members on wedges, shims, or setting nuts as required.
2. Weld plate washers to top of baseplate.
3. Snug-tighten anchor rods after supported members have been positioned and plumbed. Do not remove wedges or shims but, if protruding, cut off flush with edge of plate before packing with grout.
4. Promptly pack grout solidly between bearing surfaces and plates so no voids remain. Neatly finish exposed surfaces; protect grout and allow to cure. Comply with manufacturer's written installation instructions for shrinkage-resistant grouts.

C. Maintain erection tolerances of structural steel within AISC 303, "Code of Standard Practice for Steel Buildings and Bridges."

D. Align and adjust various members that form part of complete frame or structure before permanently fastening. Before assembly, clean bearing surfaces and other surfaces that are in permanent contact with members. Perform necessary adjustments to compensate for discrepancies in elevations and alignment.

1. Level and plumb individual members of structure.
2. Make allowances for difference between temperature at time of erection and mean temperature when structure is completed and in service.

E. Splice members only where indicated.

F. Do not use thermal cutting during erection unless approved by Architect. Finish thermally cut sections within smoothness limits in AWS D1.1/D1.1M.

G. Do not enlarge unfair holes in members by burning or using drift pins. Ream holes that must be enlarged to admit bolts.

H. Shear Connectors: Prepare steel surfaces as recommended by manufacturer of shear connectors. Use automatic end welding of headed-stud shear connectors according to AWS D1.1/D1.1M and manufacturer's written instructions.

3.4 FIELD CONNECTIONS

A. High-Strength Bolts: Install high-strength bolts according to RCSC's "Specification for Structural Joints Using ASTM A 325 or A 490 Bolts" for type of bolt and type of joint specified.

1. Joint Type: Snug tightened unless otherwise noted on drawing.

B. Weld Connections: Comply with AWS D1.1/D1.1M and AWS D1.8/D1.8M for tolerances, appearances, welding procedure specifications, weld quality, and methods used in correcting welding work.

1. Comply with AISC 303 and AISC 360 for bearing, alignment, adequacy of temporary connections, and removal of paint on surfaces adjacent to field welds.
2. Remove backing bars or runoff tabs where indicated, back gouge, and grind steel smooth.
3. Assemble and weld built-up sections by methods that maintain true alignment of axes without exceeding tolerances in AISC 303, "Code of Standard Practice for Steel Buildings and Bridges," for mill material.

3.5 FIELD QUALITY CONTROL

A. Special Inspections: Owner will engage a qualified special inspector to perform the following special inspections:

1. Verify structural-steel materials and inspect steel frame joint details.
2. Verify weld materials and inspect welds.
3. Verify connection materials and inspect high-strength bolted connections.

B. Testing Agency: Owner will engage a qualified testing agency to perform tests and inspections.

C. Bolted Connections: Inspect[and test] bolted connections according to RCSC's "Specification for Structural Joints Using ASTM A 325 or A 490 Bolts."

D. Welded Connections: Visually inspect field welds according to AWS D1.1/D1.1M.

1. In addition to visual inspection, test and inspect field welds according to AWS D1.1/D1.1M and the following inspection procedures, at testing agency's option:

a. Liquid Penetrant Inspection: ASTM E 165.
b. Magnetic Particle Inspection: ASTM E 709; performed on root pass and on finished weld. Cracks or zones of incomplete fusion or penetration are not accepted.
c. Ultrasonic Inspection: ASTM E 164.
d. Radiographic Inspection: ASTM E 94.

E. In addition to visual inspection, test and inspect field-welded shear connectors according to requirements in AWS D1.1/D1.1M for stud welding and as follows:

1. Perform bend tests if visual inspections reveal either a less-than-continuous 360-degree flash or welding repairs to any shear connector.
2. Conduct tests according to requirements in AWS D1.1/D1.1M on additional shear connectors if weld fracture occurs on shear connectors already tested.

3.6 REPAIRS AND PROTECTION

A. Galvanized Surfaces: Clean areas where galvanizing is damaged or missing and repair galvanizing to comply with ASTM A 780/A 780M.

B. Touchup Painting: Immediately after erection, clean exposed areas where primer is damaged or missing and paint with the same material as used for shop painting to comply with SSPC-PA 1 for touching up shop-painted surfaces.

1. Clean and prepare surfaces by SSPC-SP 2 hand-tool cleaning or SSPC-SP 3 power-tool cleaning.

C. Touchup Painting: Cleaning and touchup painting are specified in Section 099113 "Exterior Painting" and Section 099123 "Interior Painting."

D. Touchup Priming: Cleaning and touchup priming are specified in Section 099600 "High-Performance Coatings."

END OF SECTION 051200

SECTION 051213 - ARCHITECTURALLY EXPOSED STRUCTURAL STEEL FRAMING

PART 1 - GENERAL

1.1 RELATED DOCUMENTS

A. Drawings and general provisions of the Contract, including General and Supplementary Conditions and Division 01 Specification Sections, apply to this Section.

1.2 SUMMARY

A. Section includes architecturally exposed structural-steel (AESS).

1. Requirements in Section 051200 "Structural Steel Framing" also apply to AESS.

B. Related Requirements:

1. Section 051200 "Structural Steel Framing" for additional requirements applicable to AESS.
2. Section 055000 "Metal Fabrications" for miscellaneous steel fabrications and other metal items not defined as structural steel.
3. Section 099123 "Interior Painting" for surface preparation and priming requirements.

1.3 DEFINITIONS

A. AESS: Structural steel designated as "architecturally exposed structural steel" or "AESS" in the Contract Documents.

1.4 COORDINATION

A. Coordinate selection of shop primers with topcoats to be applied over them. Comply with paint and coating manufacturers' written recommendations to ensure that shop primers and topcoats are compatible with one another.

1.5 ACTION SUBMITTALS

A. Shop Drawings: Show fabrication of AESS components. Shop Drawings for structural steel may be used for AESS provided items of AESS are specifically identified and requirements below are met for AESS.

1. Include details of cuts, connections, splices, camber, holes, and other pertinent data.
2. Include embedment Drawings.
3. Indicate welds by standard AWS symbols, distinguishing between shop and field welds, and show size, length, and type of each weld. Show backing bars that are to be removed

and supplemental fillet welds where backing bars are to remain. Indicate grinding, finish, and profile of welds.

4. Indicate type, size, and length of bolts, distinguishing between shop and field bolts. Identify pretensioned and slip-critical, high-strength bolted connections.
5. Indicate exposed surfaces and edges and surface preparation being used.
6. Indicate special tolerances and erection requirements.

B. Samples: Submit Samples of AESS to set quality standards for exposed welds.

1.6 INFORMATIONAL SUBMITTALS

A. Paint Compatibility Certificates: From manufacturers of topcoats applied over shop primers, certifying that shop primers are compatible with topcoats.

1.7 QUALITY ASSURANCE

A. Mockups: Build mockups of AESS to set quality standards for fabrication and installation.

1. Build mockup of typical portion of AESS as shown on Drawings.
2. Coordinate painting requirements with Section 099123 "Interior Painting."
3. Approved mockups may become part of the completed Work if undisturbed at time of Substantial Completion.

1.8 DELIVERY, STORAGE, AND HANDLING

A. Use special care in handling to prevent twisting, warping, nicking, and other damage. Store materials to permit easy access for inspection and identification. Keep steel members off ground and spaced by using pallets, dunnage, or other supports and spacers. Protect steel members and packaged materials from corrosion and deterioration.

1. Do not store materials on structure in a manner that might cause distortion, damage, or overload to members or supporting structures. Repair or replace damaged materials or structures as directed.

1.9 FIELD CONDITIONS

A. Field Measurements: Where AESS is indicated to fit against other construction, verify actual dimensions by field measurements before fabrication.

PART 2 - PRODUCTS

2.1 FILLER

A. Filler: Polyester filler intended for use in repairing dents in automobile bodies.

2.2 FABRICATION

A. Shop fabricate and assemble AESS to the maximum extent possible. Locate field joints at concealed locations if possible. Detail assemblies to minimize handling and to expedite erection.

B. In addition to special care used to handle and fabricate AESS, comply with the following:

1. Fabricate with exposed surfaces smooth, square, and free of surface blemishes including pitting, rust, scale, and roughness.
2. Grind sheared, punched, and flame-cut edges of AESS to remove burrs and provide smooth surfaces and edges.
3. Fabricate AESS with exposed surfaces free of mill marks, including rolled trade names and stamped or raised identification.
4. Fabricate AESS with exposed surfaces free of seams to maximum extent possible.
5. Remove blemishes by filling or grinding or by welding and grinding, before cleaning, treating, and shop priming.
6. Fabricate with piece marks fully hidden in the completed structure or made with media that permits full removal after erection.
7. Fabricate AESS to the tolerances specified in AISC 303 for steel that is designated AESS.
8. Fabricate AESS to the tolerances specified in AISC 303 for steel that is not designated AESS.
9. Seal-weld open ends of hollow structural sections with 3/8-inch (9.5-mm) closure plates for AESS.

C. Curved Members: Fabricate indicated members to curved shape by rolling to final shape in fabrication shop.

1. Distortion of webs, stems, outstanding flanges, and legs of angles shall not be visible from a distance of 20 feet (6 m) under any lighting conditions.
2. Tolerances for walls of hollow steel sections after rolling shall be approximately 1/2 inch (13 mm).

D. Coping, Blocking, and Joint Gaps: Maintain uniform gaps of 1/8 inch (3.2 mm) with a tolerance of 1/32 inch (0.8 mm) for AESS.

E. Bolt Holes: Cut, drill, or punch standard bolt holes perpendicular to metal surfaces.

F. Holes: Provide holes required for securing other work to structural steel and for other work to pass through steel members.

1. Cut, drill, or punch holes perpendicular to steel surfaces. Do not thermally cut bolt holes or enlarge holes by burning.
2. Baseplate Holes: Cut, drill, mechanically thermal cut, or punch holes perpendicular to steel surfaces.
3. Weld threaded nuts to framing and other specialty items indicated to receive other work.

2.3 SHOP CONNECTIONS

A. High-Strength Bolts: Shop install high-strength bolts according to RCSC's "Specification for Structural Joints Using ASTM A 325 or A 490 Bolts" for type of bolt and type of joint specified.

B. Weld Connections: Comply with AWS D1.1/D1.1M and AWS D1.8/D1.8M for tolerances, appearances, welding procedure specifications, weld quality, and methods used in correcting welding work, and comply with the following:

1. Assemble and weld built-up sections by methods that will maintain true alignment of axes without exceeding specified tolerances.
2. Use weld sizes, fabrication sequence, and equipment for AESS that limit distortions to allowable tolerances.
3. Provide continuous, sealed welds at angle to gusset-plate connections and similar locations where AESS is exposed to weather.
4. Provide continuous welds of uniform size and profile where AESS is welded.
5. Grind butt and groove welds flush to adjacent surfaces within tolerance of plus 1/16 inch, minus zero inch (plus 1.5 mm, minus zero mm) for AESS.
6. Remove backing bars or runoff tabs; back-gouge and grind steel smooth for AESS.
7. At locations where welding on the far side of an exposed connection of AESS occurs, grind distortions and marking of the steel to a smooth profile aligned with adjacent material.
8. Make fillet welds for AESS oversize and grind to uniform profile with smooth face and transition.

PART 3 - EXECUTION

3.1 EXAMINATION

A. Verify, with steel erector present, elevations of concrete- and masonry-bearing surfaces and locations of anchor rods, bearing plates, and other embedments for compliance with requirements.

1. Prepare a certified survey of bearing surfaces, anchor rods, bearing plates, and other embedments showing dimensions, locations, angles, and elevations.

B. Examine AESS for twists, kinks, warping, gouges, and other imperfections before erecting.

C. Proceed with installation only after unsatisfactory conditions have been corrected.

3.2 PREPARATION

A. Provide temporary shores, guys, braces, and other supports during erection to keep AESS secure, plumb, and in alignment against temporary construction loads and loads equal in intensity to design loads. Remove temporary supports when permanent structural steel, connections, and bracing are in place unless otherwise indicated.

1. If possible, locate welded tabs for attaching temporary bracing and safety cabling where they will be concealed from view in the completed Work.

3.3 ERECTION

A. Set AESS accurately in locations and to elevations indicated and according to AISC 303 and AISC 360.

1. Erect to the tolerances specified in AISC 303 for steel that is designated AESS.
2. Erect AESS to the tolerances specified in AISC 303 for steel that is not designated AESS.

B. Do not use thermal cutting during erection.

3.4 FIELD CONNECTIONS

A. High-Strength Bolts: Install high-strength bolts according to RCSC's "Specification for Structural Joints Using ASTM A 325 or A 490 Bolts" for type of bolt and type of joint specified.

B. Weld Connections: Comply with requirements in "Weld Connections" Paragraph in "Shop Connections" Article.

1. Remove backing bars or runoff tabs; back-gouge and grind steel smooth for AESS.
2. Remove erection bolts in AESS, fill holes, and grind smooth.
3. Fill weld access holes in AESS and grind smooth.

3.5 FIELD QUALITY CONTROL

A. Testing Agency: Owner will engage a qualified independent testing and inspecting agency to inspect AESS as specified in Section 051200 "Structural Steel Framing." The testing agency is not responsible for enforcing requirements relating to aesthetic effect.

B. Architect will observe AESS in place to determine acceptability relating to aesthetic effect.

3.6 REPAIRS AND PROTECTION

A. Remove welded tabs that were used for attaching temporary bracing and safety cabling and that are exposed to view in the completed Work. Grind steel smooth.

B. Touchup Painting: Cleaning and touchup painting are specified in Section 099123 "Interior Painting."

END OF SECTION 051213

SECTION 052100 - STEEL JOIST FRAMING

1.1 RELATED DOCUMENTS

A. Drawings and general provisions of the Contract, including General and Supplementary Conditions and Division 01 Specification Sections, apply to this Section.

1.2 SUMMARY

A. Section Includes:

1. K-series steel joists.
2. KCS-type K-series steel joists.
3. K-series steel joist substitutes.
4. LH- and DLH-series long-span steel joists.
5. Joist accessories.

B. Related Requirements:

1. Section 033000 "Cast-in-Place Concrete" for installing bearing plates in concrete.
2. Section 042000 "Unit Masonry" for installing bearing plates in unit masonry.
3. Section 051200 "Structural Steel Framing" for field-welded shear connectors.

1.3 DEFINITIONS

A. SJI's "Specifications": Steel Joist Institute's "Standard Specifications, Load Tables and Weight Tables for Steel Joists and Joist Girders."

B. Special Joists: Steel joists or joist girders requiring modification by manufacturer to support nonuniform, unequal, or special loading conditions that invalidate load tables in SJI's "Specifications."

1.4 ACTION SUBMITTALS

A. Product Data: For each type of joist, accessory, and product.

B. Shop Drawings:

1. Include layout, designation, number, type, location, and spacing of joists.
2. Include joining and anchorage details, bracing, bridging, and joist accessories; splice and connection locations and details; and attachments to other construction.
3. Indicate locations and details of bearing plates to be embedded in other construction.

1.5 QUALITY ASSURANCE

A. Manufacturer Qualifications: A manufacturer certified by SJI to manufacture joists complying with applicable standard specifications and load tables in SJI's "Specifications."

1. Manufacturer's responsibilities include providing professional engineering services for designing special joists to comply with performance requirements.

B. Welding Qualifications: Qualify field-welding procedures and personnel according to AWS D1.1/D1.1M, "Structural Welding Code - Steel."

1.6 DELIVERY, STORAGE, AND HANDLING

A. Deliver, store, and handle joists as recommended in SJI's "Specifications."

B. Protect joists from corrosion, deformation, and other damage during delivery, storage, and handling.

1.7 SEQUENCING

A. Deliver steel bearing plates to be built into cast-in-place concrete and masonry construction.

PART 2 - PRODUCTS

2.1 PERFORMANCE REQUIREMENTS

A. Structural Performance: Provide special joists and connections capable of withstanding design loads indicated.

1. Use ASD; data are given at service-load level.
2. Design special joists to withstand design loads with live-load deflections no greater than the following:

a. Roof Joists: Vertical deflection of 1/360 of the span.

B. Recycled Content of Steel Products: Postconsumer recycled content plus one-half of preconsumer recycled content not less than 25 percent.

2.2 K-SERIES STEEL JOISTS

A. Manufacture steel joists of type indicated according to "Standard Specifications for Open Web Steel Joists, K-Series" in SJI's "Specifications," with steel-angle top- and bottom-chord members, underslung ends, and parallel top chord.

1. Joist Type: K-series steel joists and KCS-type K-series steel joists.

B. Steel Joist Substitutes: Manufacture according to "Standard Specifications for Open Web Steel Joists, K-Series" in SJI's "Specifications," with steel-angle or -channel members.

C. Provide holes in chord members for connecting and securing other construction to joists.

D. Top-Chord Extensions: Extend top chords of joists with SJI's Type S top-chord extensions where indicated, complying with SJI's "Specifications."

E. Extended Ends: Extend bearing ends of joists with SJI's Type R extended ends where indicated, complying with SJI's "Specifications."

F. Camber joists according to SJI's "Specifications.".

G. Equip bearing ends of joists with manufacturer's standard beveled ends or sloped shoes if joist slope exceeds 1/4 inch per 12 inches (1:48).

2.3 LONG-SPAN STEEL JOISTS

A. Manufacture steel joists according to "Standard Specifications for Longspan Steel Joists, LH-Series and Deep Longspan Steel Joists, DLH-Series" in SJI's "Specifications," with steel-angle top- and bottom-chord members; of joist type and end and top-chord arrangements as follows and as indicated on drawings:

1. Joist Type: LH-series steel joists.
2. End Arrangement: Underslung.
3. Top-Chord Arrangement: See drawings.

B. Provide holes in chord members for connecting and securing other construction to joists.

C. Camber long-span steel joists according to SJI's "Specifications" unless noted on drawings.

D. Equip bearing ends of joists with manufacturer's standard beveled ends or sloped shoes if joist slope exceeds 1/4 inch per 12 inches (1:48).

2.4 PRIMERS

A. Low-Emitting Materials: Paints and coatings shall comply with the testing and product requirements of the California Department of Health Services' "Standard Practice for the Testing of Volatile Organic Emissions from Various Sources Using Small-Scale Environmental Chambers."

B. Primer: SSPC-Paint 15, or manufacturer's standard shop primer complying with performance requirements in SSPC-Paint 15 unless indicated to be finish painted.

C. Primer: Provide shop primer that complies with Section 099113 "Exterior Painting", and Section 099123 "Interior Painting."

2.5 JOIST ACCESSORIES

A. Bridging: Provide bridging anchors and number of rows of horizontal or diagonal bridging of material, size, and type required by SJI's "Specifications" for type of joist, chord size, spacing, and span. Furnish additional erection bridging if required for stability.

B. Bridging: Schematically indicated. Detail and fabricate according to SJI's "Specifications." Furnish additional erection bridging if required for stability.

C. Bridging: Fabricate as indicated and according to SJI's "Specifications." Furnish additional erection bridging if required for stability.

D. Fabricate steel bearing plates from ASTM A 36/A 36M steel with integral anchorages of sizes and thicknesses indicated.

E. Steel bearing plates with integral anchorages are specified in Section 055000 "Metal Fabrications."

F. Furnish ceiling extensions, either extended bottom-chord elements or a separate extension unit of enough strength to support ceiling construction. Extend ends to within 1/2 inch (13 mm) of finished wall surface unless otherwise indicated.

G. Carbon-Steel Bolts and Threaded Fasteners: ASTM A 307, Grade A (ASTM F 568M, Property Class 4.6), carbon-steel, hex-head bolts and threaded fasteners; carbon-steel nuts; and flat, unhardened steel washers.

1. Finish: Plain, uncoated or Hot-dip zinc coating, ASTM A 153/A 153M, Class C.

H. High-Strength Bolts, Nuts, and Washers: ASTM A 325 (ASTM A 325M), Type 1, heavy hex steel structural bolts; ASTM A 563 (ASTM A 563M) heavy hex carbon-steel nuts; and ASTM F 436 (ASTM F 436M) hardened carbon-steel washers.

1. Finish: Plain.

I. Welding Electrodes: Comply with AWS standards.

J. Galvanizing Repair Paint: MPI#18, MPI#19, or SSPC-Paint 20 ASTM A 780.

K. Furnish miscellaneous accessories including splice plates and bolts required by joist manufacturer to complete joist assembly.

2.6 CLEANING AND SHOP PAINTING

A. Clean and remove loose scale, heavy rust, and other foreign materials from fabricated joists and accessories by hand-tool cleaning, SSPC-SP 2 or power-tool cleaning, SSPC-SP 3.

B. Do not prime paint joists and accessories to receive sprayed fire-resistive materials.

C. Apply one coat of shop primer to joists and joist accessories to be primed to provide a continuous, dry paint film not less than 1 mil (0.025 mm) thickness indicated to be finish painted.

D. Shop priming of joists and joist accessories is specified in Section 099113 "Exterior Painting", and Section 099123 "Interior Painting."

PART 3 - EXECUTION

3.1 EXAMINATION

A. Examine supporting substrates, embedded bearing plates, and abutting structural framing for compliance with requirements for installation tolerances and other conditions affecting performance.

B. Proceed with installation only after unsatisfactory conditions have been corrected.

3.2 INSTALLATION

A. Do not install joists until supporting construction is in place and secured.

B. Install joists and accessories plumb, square, and true to line; securely fasten to supporting construction according to SJI's "Specifications," joist manufacturer's written recommendations, and requirements in this Section.

1. Before installation, splice joists delivered to Project site in more than one piece.
2. Space, adjust, and align joists accurately in location before permanently fastening.
3. Install temporary bracing and erection bridging, connections, and anchors to ensure that joists are stabilized during construction.
4. Delay rigidly connecting bottom-chord extensions to columns or supports until dead loads are applied.

C. Field weld joists to supporting steel bearing plates and framework. Coordinate welding sequence and procedure with placement of joists. Comply with AWS requirements and procedures for welding, appearance and quality of welds, and methods used in correcting welding work.

D. Bolt joists to supporting steel framework using carbon-steel bolts (as indicted or required).

E. Bolt joists to supporting steel framework using high-strength structural bolts. Comply with Research Council on Structural Connection's "Specification for Structural Joints Using ASTM A 325 or ASTM A 490 Bolts" for high-strength structural bolt installation and tightening requirements (as indicated or required).

F. Install and connect bridging concurrently with joist erection, before construction loads are applied. Anchor ends of bridging lines at top and bottom chords if terminating at walls or beams.

3.3 FIELD QUALITY CONTROL

A. Testing Agency: Owner will engage a qualified independent testing and inspecting agency to inspect field welds and bolted connections and to perform field tests and inspections and prepare test and inspection reports.

B. Visually inspect field welds according to AWS D1.1/D1.1M.

1. In addition to visual inspection, test field welds according to AWS D1.1/D1.1M and the following procedures, as applicable:

a. Liquid Penetrant Inspection: ASTM E 165.
b. Magnetic Particle Inspection: ASTM E 709.
c. Ultrasonic Testing: ASTM E 164.
d. Radiographic Testing: ASTM E 94.

C. Visually inspect bolted connections.

D. Correct deficiencies in Work that test and inspection reports have indicated are not in compliance with specified requirements.

E. Perform additional testing to determine compliance of corrected Work with specified requirements.

3.4 PROTECTION

A. Repair damaged galvanized coatings on galvanized items with galvanized repair paint according to ASTM A 780 and manufacturer's written instructions.

B. Touchup Painting: After installation, promptly clean, prepare, and prime or reprime field connections, rust spots, and abraded surfaces of prime-painted joists, bearing plates, abutting structural steel, and accessories.

1. Clean and prepare surfaces by hand-tool cleaning according to SSPC-SP 2, or power-tool cleaning according to SSPC-SP 3.
2. Apply a compatible primer of same type as primer used on adjacent surfaces.

C. Touchup Painting: Cleaning and touchup painting are specified in Section 099113 "Exterior Painting", and Section 099123 "Interior Painting."

D. Provide final protection and maintain conditions, in a manner acceptable to manufacturer and Installer, that ensure that joists and accessories are without damage or deterioration at time of Substantial Completion.

END OF SECTION 052100

SECTION 053100 - STEEL DECKING

PART 1 - GENERAL

1.1 RELATED DOCUMENTS

A. Drawings and general provisions of the Contract, including General and Supplementary Conditions and Division 01 Specification Sections, apply to this Section.

1.2 SUMMARY

A. Section Includes:

1. Roof deck.
2. Acoustical cellular roof deck.
3. Composite floor deck.

B. Related Requirements:

1. Section 033000 "Cast-in-Place Concrete" for normal-weight and lightweight structural concrete fill over steel deck.
2. Section 035216 "Lightweight Insulating Concrete" for lightweight insulating concrete fill over steel deck.
3. Section 051200 "Structural Steel Framing" for shop- and field-welded shear connectors.
4. Section 055000 "Metal Fabrications" for framing deck openings with miscellaneous steel shapes.
5. Section 099113 "Exterior Painting" for repair painting of primed deck and finish painting of deck.
6. Section 099123 "Interior Painting" for repair painting of primed deck and finish painting of deck.

1.3 ACTION SUBMITTALS

A. Product Data: For each type of deck, accessory, and product indicated.

B. Shop Drawings:

1. Include layout and types of deck panels, anchorage details, reinforcing channels, pans, cut deck openings, special jointing, accessories, and attachments to other construction.

1.4 INFORMATIONAL SUBMITTALS

A. Product Certificates: For each type of steel deck.

B. Product Test Reports: Based on evaluation of comprehensive tests performed by a qualified testing agency, indicating that each of the following complies with requirements:

1. Power-actuated mechanical fasteners.
2. Acoustical roof deck.

C. Field quality-control reports.

1.5 QUALITY ASSURANCE

A. Testing Agency Qualifications: Qualified according to ASTM E 329 for testing indicated.

B. Welding Qualifications: Qualify procedures and personnel according to AWS D1.3, "Structural Welding Code - Sheet Steel."

C. FM Global Listing: Provide steel roof deck evaluated by FM Global and listed in its "Approval Guide, Building Materials" for Class 1 fire rating and Class 1-90 windstorm ratings.

1.6 DELIVERY, STORAGE, AND HANDLING

A. Protect steel deck from corrosion, deformation, and other damage during delivery, storage, and handling.

B. Stack steel deck on platforms or pallets and slope to provide drainage. Protect with a waterproof covering and ventilate to avoid condensation.

1. Protect and ventilate acoustical cellular roof deck with factory-installed insulation to maintain insulation free of moisture.

PART 2 - PRODUCTS

2.1 PERFORMANCE REQUIREMENTS

A. AISI Specifications: Comply with calculated structural characteristics of steel deck according to AISI's "North American Specification for the Design of Cold-Formed Steel Structural Members."

B. Fire-Resistance Ratings: Comply with ASTM E 119; testing by a qualified testing agency. Identify products with appropriate markings of applicable testing agency.

1. Indicate design designations from UL's "Fire Resistance Directory" or from the listings of another qualified testing agency.

C. Recycled Content of Steel Products: Postconsumer recycled content plus one-half of preconsumer recycled content not less than 25 percent.

D. Low-Emitting Materials: Paints and coatings shall comply with the testing and product requirements of the California Department of Health Services' "Standard Practice for the Testing of Volatile Organic Emissions from Various Sources Using Small-Scale Environmental Chambers."

2.2 ROOF DECK

A. Manufacturers: Subject to compliance with requirements, available manufacturers offering products that may be incorporated into the Work include, but are not limited to, the following:

1. ASC Profiles, Inc.; a Blue Scope Steel company.
2. Canam United States; Canam Group Inc.
3. CMC Joist & Deck.
4. Consolidated Systems, Inc.; Metal Dek Group.
5. Cordeck.
6. DACS, Inc.

7. Epic Metals Corporation.
8. Marlyn Steel Decks, Inc.
9. New Millennium Building Systems, LLC.
10. Nucor Corp.; Vulcraft Group.
11. Roof Deck, Inc.
12. Valley Joist; Subsidiary of EBSCO Industries, Inc.
13. Verco Manufacturing Co.
14. Wheeling Corrugating Company; Div. of Wheeling-Pittsburgh Steel Corporation.

B. Roof Deck: Fabricate panels, without top-flange stiffening grooves, to comply with "SDI Specifications and Commentary for Steel Roof Deck," in SDI Publication No. 31, and with the following:

1. Galvanized-Steel Sheet: ASTM A 653/A 653M, Structural Steel (SS), Grade 40 (275), G60 (Z180) zinc coating.
2. Deck Profile: As indicated.
3. Profile Depth: As indicated.
4. Design Uncoated-Steel Thickness: As indicated.
5. Span Condition: Triple span or more.
6. Side Laps: Overlapped or interlocking seam at Contractor's option.

2.3 ACOUSTICAL ROOF DECK

A. Manufacturers: Subject to compliance with requirements, available manufacturers offering products that may be incorporated into the Work include, but are not limited to, the following:

B. Basis-of-Design Product: Subject to compliance with requirements, provide product indicated on Drawings or comparable product by one of the following:

1. ASC Profiles, Inc.; a Blue Scope Steel company.
2. Canam United States; Canam Group Inc.
3. CMC Joist & Deck.
4. Consolidated Systems, Inc.; Metal Dek Group.
5. Cordeck.
6. DACS, Inc.
7. Epic Metals Corporation.
8. Marlyn Steel Decks, Inc.
9. New Millennium Building Systems, LLC.
10. Nucor Corp.; Vulcraft Group.
11. Roof Deck, Inc.
12. Wheeling Corrugating Company; Div. of Wheeling-Pittsburgh Steel Corporation.

C. Acoustical Roof Deck: Fabricate panels, without top-flange stiffening grooves, to comply with "SDI Specifications and Commentary for Steel Roof Deck," in SDI Publication No. 31, and with the following:

1. Galvanized-Steel Sheet: ASTM A 653/A 653M, Structural Steel (SS), Grade 40 (275), G60 (Z180) zinc coating.
2. Galvanized and Shop-Primed Steel Sheet: ASTM A 653/A 653M, Structural Steel (SS), Grade 40 (275) G60 (Z180) zinc coating; cleaned, pretreated, and primed with manufacturer's standard baked-on, rust-inhibitive primer.

   a. Color: Per Architect.
3. Deck Profile: As indicated.
4. Cellular Deck Profile: As indicated.
5. Profile Depth: As indicated.

6. Design Uncoated-Steel Thickness: As indicated.
7. Design Uncoated-Steel Thicknesses; Deck Unit/Bottom Plate: As indicated.
8. Span Condition: Triple span or more.
9. Side Laps: Overlapped or interlocking seam at Contractor's option.
10. Acoustical Perforations: Cellular deck units with manufacturer's standard perforated flat-bottom plate welded to ribbed deck.
11. Sound-Absorbing Insulation: Manufacturer's standard premolded roll or strip of glass or mineral fiber.

    a. Factory install sound-absorbing insulation into cells of cellular deck.

12. Acoustical Performance: NRC as indicated, tested according to ASTM C 423.

2.4 COMPOSITE FLOOR DECK

A. Manufacturers: Subject to compliance with requirements, available manufacturers offering products that may be incorporated into the Work include, but are not limited to, the following:

1. ASC Profiles, Inc.; a Blue Scope Steel company.
2. Canam United States; Canam Group Inc.
3. CMC Joist & Deck.
4. Consolidated Systems, Inc.; Metal Dek Group.
5. Cordeck.
6. DACS, Inc.
7. Epic Metals Corporation.
8. Marlyn Steel Decks, Inc.
9. New Millennium Building Systems, LLC.
10. Nucor Corp.; Vulcraft Group.
11. Roof Deck, Inc.
12. Verco Manufacturing Co.
13. Wheeling Corrugating Company; Div. of Wheeling-Pittsburgh Steel Corporation.

B. Composite Floor Deck: Fabricate panels, with integrally embossed or raised pattern ribs and interlocking side laps, to comply with "SDI Specifications and Commentary for Composite Steel Floor Deck," in SDI Publication No. 31, with the minimum section properties indicated, and with the following:

1. Galvanized-Steel Sheet: ASTM A 653/A 653M, Structural Steel (SS), Grade 40 (275), G60 (Z180) zinc coating.
2. Profile Depth: As indicated.
3. Design Uncoated-Steel Thickness: As indicated on drawings.
4. Span Condition: Triple span or more unless noted otherwise.

2.5 ACCESSORIES

A. General: Provide manufacturer's standard accessory materials for deck that comply with requirements indicated.

B. Mechanical Fasteners: Corrosion-resistant, low-velocity, power-actuated or pneumatically driven carbon-steel fasteners; or self-drilling, self-threading screws.

C. Side-Lap Fasteners: Corrosion-resistant, hexagonal washer head; self-drilling, carbon-steel screws, No. 10 (4.8-mm) minimum diameter.

D. Flexible Closure Strips: Vulcanized, closed-cell, synthetic rubber.

E. Miscellaneous Sheet Metal Deck Accessories: Steel sheet, minimum yield strength of 33,000 psi (230 MPa), not less than 0.0359-inch (0.91-mm) design uncoated thickness, of same material and finish as deck; of profile indicated or required for application.

F. Pour Stops and Girder Fillers: Steel sheet, minimum yield strength of 33,000 psi (230 MPa), of same material and finish as deck, and of thickness and profile indicated and if not indicated recommended by SDI Publication No. 31 for overhang and slab depth.

G. Column Closures, End Closures, Z-Closures, and Cover Plates: Steel sheet, of same material, finish, and thickness as deck unless otherwise indicated.

H. Piercing Hanger Tabs: Piercing steel sheet hanger attachment devices for use with floor deck.

I. Weld Washers: Uncoated steel sheet, shaped to fit deck rib, 0.0747 inch (1.90 mm) thick, with factory-punched hole of 3/8-inch (9.5-mm) minimum diameter.

J. Flat Sump Plates: Single-piece steel sheet, 0.0747 inch (1.90 mm) thick, of same material and finish as deck. For drains, cut holes in the field.

K. Recessed Sump Pans: Single-piece steel sheet, 0.0747 inch (1.90 mm) thick, of same material and finish as deck, with 3-inch- (76-mm-) wide flanges and sloped recessed pans of 1-1/2-inch (38-mm) minimum depth. For drains, cut holes in the field.

L. Galvanizing Repair Paint: ASTM A 780, SSPC-Paint 20 or MIL-P-21035B, with dry film containing a minimum of 94 percent zinc dust by weight.

PART 3 - EXECUTION

3.1 EXAMINATION

A. Examine supporting frame and field conditions for compliance with requirements for installation tolerances and other conditions affecting performance.

B. Proceed with installation only after unsatisfactory conditions have been corrected.

3.2 INSTALLATION, GENERAL

A. Install deck panels and accessories according to applicable specifications and commentary in SDI Publication No. 31, manufacturer's written instructions, and requirements in this Section.

B. Install temporary shoring before placing deck panels if required to meet deflection limitations.

C. Locate deck bundles to prevent overloading of supporting members.

D. Place deck panels on supporting frame and adjust to final position with ends accurately aligned and bearing on supporting frame before being permanently fastened. Do not stretch or contract side-lap interlocks.

1. Align cellular deck panels over full length of cell runs and align cells at ends of abutting panels.

E. Place deck panels flat and square and fasten to supporting frame without warp or deflection.

F. Cut and neatly fit deck panels and accessories around openings and other work projecting through or adjacent to deck.

G. Provide additional reinforcement and closure pieces at openings as required for strength, continuity of deck, and support of other work.

H. Comply with AWS requirements and procedures for manual shielded metal arc welding, appearance and quality of welds, and methods used for correcting welding work.

I. Mechanical fasteners may be used in lieu of welding to fasten deck. Locate mechanical fasteners and install according to deck manufacturer's written instructions.

3.3 ROOF-DECK INSTALLATION

A. Fasten roof-deck panels to steel supporting members by arc spot (puddle) welds of the surface diameter indicated or arc seam welds with an equal perimeter that is not less than 1-1/2 inches (38 mm) long, and as follows:

1. Weld Diameter: 5/8 inch (16 mm) nominal.
2. Weld Spacing: Weld edge and interior ribs of deck units with a minimum of two welds per deck unit at each support. Space welds 12 inches (305 mm) apart in the field of roof and 6 inches (150 mm) apart in roof corners and perimeter, based on roof-area definitions in FMG Loss Prevention Data Sheet 1-28.
3. Weld Washers: Install weld washers at each weld location as required.

B. Side-Lap and Perimeter Edge Fastening: Fasten side laps and perimeter edges of panels between supports, at intervals not exceeding the lesser of 1/2 of the span or 18 inches (457 mm) and as follows:

1. Mechanically fasten with self-drilling, No. 10 (4.8-mm-) diameter or larger, carbon-steel screws.
2. Mechanically clinch or button punch.
3. Fasten with a minimum of 1-1/2-inch- (38-mm-) long welds.

C. End Bearing: Install deck ends over supporting frame with a minimum end bearing of 1-1/2 inches (38 mm), with end joints as follows:

1. End Joint: Lapped 2 inches (51 mm) minimum or butted at Contractor's option.

D. Roof Sump Pans and Sump Plates: Install over openings provided in roof deck and mechanically fasten flanges to top of deck. Space mechanical fasteners not more than 12 inches (305 mm) apart with at least one fastener at each corner.

1. Install reinforcing channels or zees in ribs to span between supports and mechanically fasten.

E. Miscellaneous Roof-Deck Accessories: Install ridge and valley plates, finish strips, end closures, and reinforcing channels according to deck manufacturer's written instructions. Weld or mechanically fasten to substrate to provide a complete deck installation.

1. Weld cover plates at changes in direction of roof-deck panels unless otherwise indicated.

F. Flexible Closure Strips: Install flexible closure strips over partitions, walls, and where indicated. Install with adhesive according to manufacturer's written instructions to ensure complete closure.

3.4 FLOOR-DECK INSTALLATION

A. Fasten floor-deck panels to steel supporting members by arc spot (puddle) welds of the surface diameter indicated and as follows:

1. Weld Diameter: 5/8 inch (16 mm)nominal.
2. Weld Spacing: Weld edge ribs of panels at each support. Space additional welds an average of 12 inches (305 mm) apart, but not more than 18 inches (457 mm) apart.
3. Weld Spacing: Space and locate welds as indicated.
4. Weld Washers: Install weld washers at each weld location.

B. Side-Lap and Perimeter Edge Fastening: Fasten side laps and perimeter edges of panels between supports, at intervals not exceeding the lesser of half of the span or 36 inches (914 mm), and as follows:

1. Mechanically fasten with self-drilling, No. 10 (4.8-mm-) diameter or larger, carbon-steel screws.
2. Mechanically clinch or button punch.
3. Fasten with a minimum of 1-1/2-inch- (38-mm-) long welds.

C. End Bearing: Install deck ends over supporting frame with a minimum end bearing of 1-1/2 inches (38 mm), with end joints as follows:

1. End Joints: Lapped or butted at Contractor's option.

D. Pour Stops and Girder Fillers: Weld steel sheet pour stops and girder fillers to supporting structure according to SDI recommendations unless otherwise indicated.

E. Floor-Deck Closures: Weld steel sheet column closures, cell closures, and Z-closures to deck, according to SDI recommendations, to provide tight-fitting closures at open ends of ribs and sides of deck.

F. Install piercing hanger tabs at 14 inches (355 mm) apart in both directions, within 9 inches (228 mm) of walls at ends, and not more than 12 inches (305 mm) from walls at sides unless otherwise indicated.

3.5 FIELD QUALITY CONTROL

A. Testing Agency: Owner will engage a qualified testing agency to perform tests and inspections.

B. Field welds will be subject to inspection.

C. Testing agency will report inspection results promptly and in writing to Contractor and Architect.

D. Remove and replace work that does not comply with specified requirements.

E. Additional inspecting, at Contractor's expense, will be performed to determine compliance of corrected work with specified requirements.

3.6 PROTECTION

A. Galvanizing Repairs: Prepare and repair damaged galvanized coatings on both surfaces of deck with galvanized repair paint according to ASTM A 780 and manufacturer's written instructions.

B. Repair Painting: Wire brush and clean rust spots, welds, and abraded areas on both surfaces of prime-painted deck immediately after installation, and apply repair paint.

1. Apply repair paint, of same color as adjacent shop-primed deck, to bottom surfaces of deck exposed to view.
2. Wire brushing, cleaning, and repair painting of bottom deck surfaces are included in Section 099113 "Exterior Painting" and Section 099123 "Interior Painting."

C. Repair Painting: Wire brushing, cleaning, and repair painting of rust spots, welds, and abraded areas of both deck surfaces are included in Section 099113 "Exterior Painting" and Section 099123 "Interior Painting."

D. Provide final protection and maintain conditions to ensure that steel deck is without damage or deterioration at time of Substantial Completion.

END OF SECTION 053100

SECTION 054000 - COLD-FORMED METAL FRAMING

PART 1 - GENERAL

1.1 RELATED DOCUMENTS

A. Drawings and general provisions of the Contract, including General and Supplementary Conditions and Division 01 Specification Sections, apply to this Section.

1.2 SUMMARY

A. Section Includes:

1. Exterior non-load-bearing wall framing.
2. Ceiling joist framing.
3. Soffit framing.
4. All members indicated on drawings as "Cold-Formed" and/or 20 gauge or heavier.

B. Related Requirements:

1. Section 055000 "Metal Fabrications" for masonry shelf angles and connections.
2. Section 092116.23 "Gypsum Board Shaft Wall Assemblies" for interior non-load-bearing, metal-stud-framed, shaft-wall assemblies.
3. Section 092216 "Non-Structural Metal Framing" for interior non-load-bearing, metal-stud framing and ceiling-suspension assemblies.

1.3 PREINSTALLATION MEETINGS

A. Preinstallation Conference: Conduct conference at Project site.

1.4 ACTION SUBMITTALS

A. Product Data: For each type of cold-formed steel framing product and accessory.

B. Shop Drawings:

1. Include layout, spacings, sizes, thicknesses, and types of cold-formed steel framing; fabrication; and fastening and anchorage details, including mechanical fasteners.
2. Indicate reinforcing channels, opening framing, supplemental framing, strapping, bracing, bridging, splices, accessories, connection details, and attachment to adjoining work.

C. Delegated-Design Submittal: For cold-formed steel framing.

1.5 INFORMATIONAL SUBMITTALS

A. Product Test Reports: For each listed product, for tests performed by manufacturer and witnessed by a qualified testing agency or a qualified testing agency.

1. Expansion anchors.
2. Power-actuated anchors.
3. Mechanical fasteners.

1.6 QUALITY ASSURANCE

A. Testing Agency Qualifications: Qualified according to ASTM E 329 for testing indicated.

B. Product Tests: Mill certificates or data from a qualified independent testing agency, or in-house testing with calibrated test equipment indicating steel sheet complies with requirements, including base-metal thickness, yield strength, tensile strength, total elongation, chemical requirements, and metallic-coating thickness.

C. Welding Qualifications: Qualify procedures and personnel according to the following:

1. AWS D1.1/D1.1M, "Structural Welding Code - Steel."
2. AWS D1.3/D1.3M, "Structural Welding Code - Sheet Steel."

1.7 DELIVERY, STORAGE, AND HANDLING

A. Protect cold-formed steel framing from corrosion, moisture staining, deformation, and other damage during delivery, storage, and handling.

PART 2 - PRODUCTS

2.1 MANUFACTURERS

A. Manufacturers: Subject to compliance with requirements, available manufacturers offering products that may be incorporated into the Work include, but are not limited to, the following:

1. AllSteel & Gypsum Products, Inc.
2. California Expanded Metal Products Company.
3. ClarkWestern Building Systems, Inc.
4. Consolidated Fabricators Corp.; Building Products Division.
5. Craco Mfg., Inc.
6. Custom Stud Inc.
7. Design Shapes in Steel.
8. Dietrich Metal Framing; a Worthington Industries Company.
9. Formetal Co. Inc. (The).
10. MarinoWARE.
11. Nuconsteel; a Nucor Company.
12. Olmar Supply, Inc.
13. Quail Run Building Materials, Inc.
14. SCAFCO Corporation.
15. Southeastern Stud & Components, Inc.
16. State Building Products, Inc.
17. Steel Construction Systems.
18. Steel Network, Inc. (The).
19. Steel Structural Systems.
20. Steeler, Inc.
21. Super Stud Building Products, Inc.

22. Telling Industries, LLC.
23. United Metal Products, Inc.
24. United Steel Manufacturing.

2.2 PERFORMANCE REQUIREMENTS

A. Delegated Design: Engage a qualified professional engineer, as defined in Section 014000 "Quality Requirements," to design cold-formed steel framing.

B. Structural Performance: Provide cold-formed steel framing capable of withstanding design loads within limits and under conditions indicated.

1. Design Loads: As indicated.
2. Deflection Limits: Design framing systems to withstand design loads without deflections greater than the following:

   a. Exterior Non-Load-Bearing Framing: Horizontal deflection of 1/600 of the wall height.
   b. Ceiling Joist Framing: Vertical deflection of 1/360 of the span for live loads and 1/240 for total loads of the span.

3. Design framing systems to provide for movement of framing members located outside the insulated building envelope without damage or overstressing, sheathing failure, connection failure, undue strain on fasteners and anchors, or other detrimental effects when subject to a maximum ambient temperature change of 120 deg F (67 deg C).
4. Design framing system to maintain clearances at openings, to allow for construction tolerances, and to accommodate live load deflection of primary building structure as follows:

   a. Upward and downward movement of 1 inch (25 mm).

5. Design exterior non-load-bearing wall framing to accommodate horizontal deflection without regard for contribution of sheathing materials.

C. Cold-Formed Steel Framing Design Standards:

1. Wall Studs: AISI S211.
2. Headers: AISI S212.

D. AISI Specifications and Standards: Unless more stringent requirements are indicated, comply with AISI S100 and AISI S200.

E. Fire-Resistance Ratings: Comply with ASTM E 119; testing by a qualified testing agency. Identify products with appropriate markings of applicable testing agency.

1. Indicate design designations from UL's "Fire Resistance Directory" or from the listings of another qualified testing agency.

2.3 COLD-FORMED STEEL FRAMING, GENERAL

A. Recycled Content of Steel Products: Postconsumer recycled content plus one-half of preconsumer recycled content not less than 25 percent.

B. Steel Sheet: ASTM A 1003/A 1003M, Structural Grade, Type H, metallic coated, of grade and coating weight as follows:

1. Grade: As required by structural performance.
2. Coating: G60 (Z180).

C. Steel Sheet for Vertical Deflection and Drift Clips: ASTM A 653/A 653M, structural steel, zinc coated, of grade and coating as follows:

1. Grade: 33 (230) or 50 (340), Class 1.
2. Coating: G60 (Z180).

2.4 EXTERIOR NON-LOAD-BEARING WALL FRAMING

A. Steel Studs: Manufacturer's standard C-shaped steel studs, of web depths indicated, punched, with stiffened flanges, and as follows:

1. Minimum Base-Metal Thickness: See drawings.
2. Minimum Flange Width: See drawings.
3. Minimum Section Properties: See drawings.

B. Steel Track: Manufacturer's standard U-shaped steel track, of web depths indicated, unpunched, with unstiffened flanges, and as follows:

1. Minimum Base-Metal Thickness: Matching steel studs.
2. Flange Width: 1-1/4 inches (32 mm).

C. Vertical Deflection Clips: Manufacturer's standard bypass or head clips, capable of accommodating upward and downward vertical displacement of primary structure through positive mechanical attachment to stud web.

1. Manufacturers: Subject to compliance with requirements, available manufacturers offering products that may be incorporated into the Work include, but are not limited to, the following:

a. AllSteel & Gypsum Products, Inc.
b. ClarkWestern Building Systems, Inc.
c. Dietrich Metal Framing; a Worthington Industries company.
d. MarinoWARE.
e. SCAFCO Corporation.
f. Steel Network, Inc. (The).
g. Steeler, Inc.

D. Single Deflection Track: Manufacturer's single, deep-leg, U-shaped steel track; unpunched, with unstiffened flanges, of web depth to contain studs while allowing free vertical movement, with flanges designed to support horizontal loads and transfer them to the primary structure, and as follows:

1. Minimum Base-Metal Thickness: As required by design (18 gauge minimum), or as indicated.
2. Flange Width: 1 inch (25 mm) plus the design gap for one-story structures and 1 inch (25 mm) plus twice the design gap for other applications.

E. Double Deflection Tracks: Manufacturer's double, deep-leg, U-shaped steel tracks, consisting of nested inner and outer tracks; unpunched, with unstiffened flanges.

1. Outer Track: Of web depth to allow free vertical movement of inner track, with flanges designed to support horizontal loads and transfer them to the primary structure, and as follows:

    a. Minimum Base-Metal Thickness: As required by design (18 gauge minimum).
    b. Flange Width: 1 inch (25 mm) plus the design gap for one-story structures and 1 inch (25 mm) plus twice the design gap for other applications.

2. Inner Track: Of web depth indicated, and as follows:

    a. Minimum Base-Metal Thickness: As required by design (18 gauge minimum).
    b. Flange Width: 1 inch (25 mm) plus the design gap for one-story structures and 1 inch (25 mm) plus twice the design gap for other applications.

F. Drift Clips: Manufacturer's standard bypass or head clips, capable of isolating wall stud from upward and downward vertical displacement and lateral drift of primary structure through positive mechanical attachment to stud web and structure.

2.5 CEILING JOIST FRAMING

A. Steel Ceiling Joists: Manufacturer's standard C-shaped steel sections, of web depths indicated, with stiffened flanges, and as follows:

1. Minimum Base-Metal Thickness: As required or indicated.
2. Flange Width: 1-5/8 inches (41 mm) minimum.

2.6 SOFFIT FRAMING

A. Exterior Soffit Frame: Manufacturer's standard C-shaped steel sections, of web depths indicated, with stiffened flanges, and as follows:

1. Minimum Base-Metal Thickness: As required or indicated.
2. Flange Width: 1-5/8 inches (41 mm), minimum.

2.7 FRAMING ACCESSORIES

A. Fabricate steel-framing accessories from steel sheet, ASTM A 1003/A 1003M, Structural Grade, Type H, metallic coated, of same grade and coating weight used for framing members.

B. Provide accessories of manufacturer's standard thickness and configuration, unless otherwise indicated, as follows:

1. Supplementary framing.
2. Bracing, bridging, and solid blocking.
3. Web stiffeners.
4. Anchor clips.
5. End clips.
6. Foundation clips.
7. Gusset plates.
8. Stud kickers and knee braces.
9. Joist hangers and end closures.
10. Hole reinforcing plates.
11. Backer plates.

2.8 ANCHORS, CLIPS, AND FASTENERS

A. Steel Shapes and Clips: ASTM A 36/A 36M, zinc coated by hot-dip process according to ASTM A 123/A 123M.

B. Anchor Bolts: ASTM F 1554, Grade 36, threaded carbon-steel hex-headed bolts and carbon-steel nuts; and flat, hardened-steel washers; zinc coated by hot-dip process according to ASTM A 153/A 153M, Class C.

C. Expansion Anchors: Fabricated from corrosion-resistant materials, with allowable load or strength design capacities calculated according to ICC-ES AC193 and ACI 318 greater than or equal to the design load, as determined by testing per ASTM E 488 conducted by a qualified testing agency.

D. Power-Actuated Anchors: Fastener system of type suitable for application indicated, fabricated from corrosion-resistant materials, with allowable load capacities calculated according to ICC-ES AC70, greater than or equal to the design load, as determined by testing per ASTM E 1190 conducted by a qualified testing agency.

E. Mechanical Fasteners: ASTM C 1513, corrosion-resistant-coated, self-drilling, self-tapping, steel drill screws.

1. Head Type: Low-profile head beneath sheathing, manufacturer's standard elsewhere.

F. Welding Electrodes: Comply with AWS standards.

2.9 MISCELLANEOUS MATERIALS

A. Galvanizing Repair Paint: SSPC-Paint 20 or MIL-P-21035B.

B. Cement Grout: Portland cement, ASTM C 150, Type I; and clean, natural sand, ASTM C 404. Mix at ratio of 1 part cement to 2-1/2 parts sand, by volume, with minimum water required for placement and hydration.

C. Nonmetallic, Nonshrink Grout: Premixed, nonmetallic, noncorrosive, nonstaining grout containing selected silica sands, portland cement, shrinkage-compensating agents, and plasticizing and water-reducing agents, complying with ASTM C 1107/C 1107M, with fluid consistency and 30-minute working time.

D. Shims: Load bearing, high-density multimonomer plastic, and nonleaching; or of cold-formed steel of same grade and coating as framing members supported by shims.

E. Sealer Gaskets: Closed-cell neoprene foam, 1/4 inch (6.4 mm) thick, selected from manufacturer's standard widths to match width of bottom track or rim track members.

2.10 FABRICATION

A. Fabricate cold-formed steel framing and accessories plumb, square, and true to line, and with connections securely fastened, according to referenced AISI's specifications and standards, manufacturer's written instructions, and requirements in this Section.

1. Fabricate framing assemblies using jigs or templates.
2. Cut framing members by sawing or shearing; do not torch cut.

3. Fasten cold-formed steel framing members by welding, screw fastening, clinch fastening, pneumatic pin fastening, or riveting as standard with fabricator. Wire tying of framing members is not permitted.

    a. Comply with AWS D1.3/D1.3M requirements and procedures for welding, appearance and quality of welds, and methods used in correcting welding work.
    b. Locate mechanical fasteners and install according to Shop Drawings, with screw penetrating joined members by no fewer than three exposed screw threads.

4. Fasten other materials to cold-formed steel framing by welding, bolting, pneumatic pin fastening, or screw fastening, according to Shop Drawings.

B. Reinforce, stiffen, and brace framing assemblies to withstand handling, delivery, and erection stresses. Lift fabricated assemblies to prevent damage or permanent distortion.

C. Fabrication Tolerances: Fabricate assemblies level, plumb, and true to line to a maximum allowable tolerance variation of 1/8 inch in 10 feet (1:960) and as follows:

1. Spacing: Space individual framing members no more than plus or minus 1/8 inch (3 mm) from plan location. Cumulative error shall not exceed minimum fastening requirements of sheathing or other finishing materials.
2. Squareness: Fabricate each cold-formed steel framing assembly to a maximum out-of-square tolerance of 1/8 inch (3 mm).

PART 3 - EXECUTION

3.1 EXAMINATION

A. Examine supporting substrates and abutting structural framing for compliance with requirements for installation tolerances and other conditions affecting performance of the Work.

B. Proceed with installation only after unsatisfactory conditions have been corrected.

3.2 PREPARATION

A. Before sprayed fire-resistive materials are applied, attach continuous angles, supplementary framing, or tracks to structural members indicated to receive sprayed fire-resistive materials.

B. After applying sprayed fire-resistive materials, remove only as much of these materials as needed to complete installation of cold-formed framing without reducing thickness of fire-resistive materials below that are required to obtain fire-resistance rating indicated. Protect remaining fire-resistive materials from damage.

C. Install load bearing shims or grout between the underside of load-bearing wall bottom track and the top of foundation wall or slab at locations with a gap larger than 1/4 inch (6 mm) to ensure a uniform bearing surface on supporting concrete or masonry construction.

D. Install sealer gaskets at the underside of wall bottom track or rim track and at the top of foundation wall or slab at stud or joist locations.

3.3 INSTALLATION, GENERAL

A. Cold-formed steel framing may be shop or field fabricated for installation, or it may be field assembled.

B. Install cold-formed steel framing according to AISI S200 and to manufacturer's written instructions unless more stringent requirements are indicated.

C. Install shop- or field-fabricated, cold-formed framing and securely anchor to supporting structure.

1. Screw, bolt, or weld wall panels at horizontal and vertical junctures to produce flush, even, true-to-line joints with maximum variation in plane and true position between fabricated panels not exceeding 1/16 inch (1.6 mm).

D. Install cold-formed steel framing and accessories plumb, square, and true to line, and with connections securely fastened.

1. Cut framing members by sawing or shearing; do not torch cut.
2. Fasten cold-formed steel framing members by welding, screw fastening, clinch fastening, or riveting. Wire tying of framing members is not permitted.

a. Comply with AWS D1.3/D1.3M requirements and procedures for welding, appearance and quality of welds, and methods used in correcting welding work.
b. Locate mechanical fasteners and install according to Shop Drawings, and complying with requirements for spacing, edge distances, and screw penetration.

E. Install framing members in one-piece lengths unless splice connections are indicated for track or tension members.

F. Install temporary bracing and supports to secure framing and support loads comparable in intensity to those for which structure was designed. Maintain braces and supports in place, undisturbed, until entire integrated supporting structure has been completed and permanent connections to framing are secured.

G. Do not bridge building expansion joints with cold-formed steel framing. Independently frame both sides of joints.

H. Install insulation, specified in Section 072100 "Thermal Insulation," in built-up exterior framing members, such as headers, sills, boxed joists, and multiple studs at openings, that are inaccessible on completion of framing work.

I. Fasten hole reinforcing plate over web penetrations that exceed size of manufacturer's approved or standard punched openings.

J. Erection Tolerances: Install cold-formed steel framing level, plumb, and true to line to a maximum allowable tolerance variation of 1/8 inch in 10 feet (1:960) and as follows:

1. Space individual framing members no more than plus or minus 1/8 inch (3 mm) from plan location. Cumulative error shall not exceed minimum fastening requirements of sheathing or other finishing materials.

3.4 EXTERIOR NON-LOAD-BEARING WALL INSTALLATION

A. Install continuous tracks sized to match studs. Align tracks accurately and securely anchor to supporting structure as indicated.

B. Fasten both flanges of studs to top and bottom track unless otherwise indicated. Space studs as follows:

1. Stud Spacing: 16 inches (406 mm) unless noted otherwise.

C. Set studs plumb, except as needed for diagonal bracing or required for nonplumb walls or warped surfaces and similar requirements.

D. Isolate non-load-bearing steel framing from building structure to prevent transfer of vertical loads while providing lateral support.

1. Install single deep-leg deflection tracks and anchor to building structure.
2. Install double deep-leg deflection tracks and anchor outer track to building structure.
3. Connect vertical deflection clips to bypassing or infill studs and anchor to building structure.
4. Connect drift clips to cold-formed metal framing and anchor to building structure.

E. Install horizontal bridging in wall studs, spaced vertically in rows indicated on Shop Drawings but not more than 48 inches (1220 mm) apart. Fasten at each stud intersection.

1. Top Bridging for Single Deflection Track: Install row of horizontal bridging within 12 inches (305 mm) of single deflection track. Install a combination of bridging and stud or stud-track solid blocking of width and thickness matching studs, secured to stud webs or flanges.

a. Install solid blocking at centers indicated on Shop Drawings.

2. Bridging: Cold-rolled steel channel, welded or mechanically fastened to webs of punched studs.
3. Bridging: Combination of flat, taut, steel sheet straps of width and thickness indicated and stud-track solid blocking of width and thickness to match studs. Fasten flat straps to stud flanges and secure solid blocking to stud webs or flanges.
4. Bridging: Proprietary bridging bars installed according to manufacturer's written instructions.

F. Install miscellaneous framing and connections, including stud kickers, web stiffeners, clip angles, continuous angles, anchors, and fasteners, to provide a complete and stable wall-framing system.

3.5 CEILING JOIST AND SOFFIT INSTALLATION

A. Install perimeter joist track sized to match joists. Align and securely anchor or fasten track to supporting structure at corners, ends, and spacings indicated on Shop Drawings.

B. Install joists bearing on supporting frame, level, straight, and plumb; adjust to final position, brace, and reinforce. Fasten joists to both flanges of joist track.

C. Space joists not more than 2 inches (51 mm) from abutting walls, and as follows:

1. Joist spacing: 16 inches (406 mm) or as indicated.

D. Frame openings with built-up joist headers consisting of joist and joist track, or another combination of connected joists if indicated.

E. Install bridging at intervals indicated on Shop Drawings. Fasten bridging at each joist intersection as follows:

1. Bridging: Joist –track solid blocking of width and thickness indicated, secured to joist webs.

2. Bridging: Combination of flat, taut, steel sheet straps of width and thickness indicated and joist-track solid blocking of width and thickness indicated. Fasten flat straps to bottom flange of joists and secure solid blocking to joist webs.

F. Secure joists to load-bearing interior walls to prevent lateral movement of bottom flange.

G. Install miscellaneous joist framing and connections, including web stiffeners, closure pieces, clip angles, continuous angles, hold-down angles, anchors, and fasteners, to provide a complete and stable joist-framing assembly.

3.6 FIELD QUALITY CONTROL

A. Testing: Owner will engage a qualified independent testing and inspecting agency to perform field tests and inspections and prepare test reports.

B. Field and shop welds will be subject to testing and inspecting.

C. Testing agency will report test results promptly and in writing to Contractor and Architect.

D. Remove and replace work where test results indicate that it does not comply with specified requirements.

E. Additional testing and inspecting, at Contractor's expense, will be performed to determine compliance of replaced or additional work with specified requirements.

3.7 REPAIRS AND PROTECTION

A. Galvanizing Repairs: Prepare and repair damaged galvanized coatings on fabricated and installed cold-formed steel framing with galvanized repair paint according to ASTM A 780 and manufacturer's written instructions.

B. Provide final protection and maintain conditions, in a manner acceptable to manufacturer and Installer, that ensure that cold-formed steel framing is without damage or deterioration at time of Substantial Completion.

END OF SECTION 054000

SECTION 055000 - METAL FABRICATIONS

PART 1 - GENERAL

1.1 RELATED DOCUMENTS

A. Drawings and general provisions of the Contract, including General and Supplementary Conditions and Division 01 Specification Sections, apply to this Section.

1.2 SUMMARY

A. Section Includes:
1. Steel framing and supports for operable partitions.
2. Steel framing and supports for overhead doors and grilles.
3. Steel framing and supports for countertops.
4. Steel framing and supports for mechanical and electrical equipment.
5. Steel framing and supports for applications where framing and supports are not specified in other Sections.
6. Elevator hoist beams**.**
7. Steel shapes for supporting elevator door sills.
8. Shelf angles.
9. Metal ladders.
10. Alternating tread devices.
11. Metal floor plate and supports.
12. Elevator pit sump covers.
13. Loose bearing and leveling plates for applications where they are not specified in other Sections.

B. Products furnished, but not installed, under this Section include the following:

1. Loose steel lintels.
2. Anchor bolts, steel pipe sleeves, slotted-channel inserts, and wedge-type inserts indicated to be cast into concrete or built into unit masonry.
3. Steel weld plates and angles for casting into concrete for applications where they are not specified in other Sections.

C. Related Requirements:

1. Section 033000 "Cast-in-Place Concrete" for installing anchor bolts, steel pipe sleeves, slotted-channel inserts, wedge-type inserts, and other items cast into concrete.
2. Section 042000 "Unit Masonry" for installing loose lintels, anchor bolts, and other items built into unit masonry.
3. Section 051200 "Structural Steel Framing."
4. Section 129300 "Site Furnishings" for bicycle racks.

1.3 COORDINATION

A. Coordinate selection of shop primers with topcoats to be applied over them. Comply with paint and coating manufacturers' written recommendations to ensure that shop primers and topcoats are compatible with one another.

B. Coordinate installation of metal fabrications that are anchored to or that receive other work. Furnish setting drawings, templates, and directions for installing anchorages, including sleeves, concrete inserts, anchor bolts, and items with integral anchors, that are to be embedded in concrete or masonry. Deliver such items to Project site in time for installation.

1.4 ACTION SUBMITTALS

A. Product Data: For the following:

1. Nonslip aggregates and nonslip-aggregate surface finishes.
2. Metal nosings and treads.
3. Paint products.
4. Grout.

B. Shop drawings detailing fabrication and erection of each metal fabrication indicated. Include plans, elevations, sections, and details of metal fabrications and their connections. Show anchorage and accessory items. Provide templates for anchors and bolts specified for installation under other Sections.

C. Samples representative of materials and finished products as requested by Architect.

D. Delegated-Design Submittal: For ladders and alternating tread devices, including analysis data signed and sealed by a professional engineer licensed in the state of Delaware responsible for their preparation.

1.5 QUALITY ASSURANCE

A. Welding Qualifications: Qualify procedures and personnel according to AWS D1.1/D1.1M, "Structural Welding Code - Steel."

B. Welding Qualifications: Qualify procedures and personnel according to the following:

1. AWS D1.1/D1.1M, "Structural Welding Code - Steel."
2. AWS D1.2/D1.2M, "Structural Welding Code - Aluminum."
3. AWS D1.6/D1.6M, "Structural Welding Code - Stainless Steel."

1.6 FIELD CONDITIONS

A. Field Measurements: Verify actual locations of walls and other construction contiguous with metal fabrications by field measurements before fabrication.

PART 2 - PRODUCTS

2.1 PERFORMANCE REQUIREMENTS

A. Delegated Design: Engage a qualified professional engineer licensed in the state of Delaware, to design ladders and alternating tread devices.

B. Structural Performance of Aluminum Ladders: Aluminum ladders**,** including landings, shall withstand the effects of loads and stresses within limits and under conditions specified in ANSI A14.3.

C. Structural Performance of Alternating Tread Devices: Alternating tread devices shall withstand the effects of gravity loads and the following loads and stresses within limits and under conditions indicated.

1. Uniform Load: 100 lbf/sq. ft. (4.79 kN/sq. m).
2. Concentrated Load: 300 lbf (1.33 kN) applied on an area of 4 sq. in. (2580 sq. mm).
3. Uniform and concentrated loads need not be assumed to act concurrently.
4. Alternating Tread Device Framing: Capable of withstanding stresses resulting from railing loads in addition to loads specified above.

D. Thermal Movements: Allow for thermal movements from ambient and surface temperature changes acting on exterior metal fabrications by preventing buckling, opening of joints, overstressing of components, failure of connections, and other detrimental effects.

1. Temperature Change: 120 deg F ambient; 180 deg F, material surfaces.

2.2 METALS

A. Metal Surfaces, General: Provide materials with smooth, flat surfaces unless otherwise indicated. For metal fabrications exposed to view in the completed Work, provide materials without seam marks, roller marks, rolled trade names, or blemishes.

B. Steel Plates, Shapes, and Bars: ASTM A 36/A 36M.

C. Steel Tubing: ASTM A 500/A 500M, cold-formed steel tubing.

D. Steel Pipe: ASTM A 53/A 53M, Standard Weight (Schedule 40) unless otherwise indicated.

E. Aluminum Castings: ASTM B 26/B 26M, Alloy 443.0-F.

2.3 FASTENERS

A. General: Unless otherwise indicated, provide Type 304 stainless-steel fasteners for exterior use and zinc-plated fasteners with coating complying with ASTM B 633 or ASTM F 1941 (ASTM F 1941M), Class Fe/Zn 5, at exterior walls. Select fasteners for type, grade, and class required.

1. Provide stainless-steel fasteners for fastening aluminum.

B. Steel Bolts and Nuts: Regular hexagon-head bolts, ASTM A 307, Grade A (ASTM F 568M, Property Class 4.6); with hex nuts, ASTM A 563 (ASTM A 563M); and, where indicated, flat washers.

C. Anchor Bolts: ASTM F 1554, Grade 36, of dimensions indicated; with nuts, ASTM A 563 (ASTM A 563M); and, where indicated, flat washers.

1. Hot-dip galvanize or provide mechanically deposited, zinc coating where item being fastened is indicated to be galvanized.

D. Anchors, General: Anchors capable of sustaining, without failure, a load equal to six times the load imposed when installed in unit masonry and four times the load imposed when installed in concrete, as determined by testing according to ASTM E 488/E 488M, conducted by a qualified independent testing agency.

E. Cast-in-Place Anchors in Concrete: Either threaded type or wedge type unless otherwise indicated; galvanized ferrous castings, either ASTM A 47/A 47M malleable iron or ASTM A 27/A 27M cast steel. Provide bolts, washers, and shims as needed, all hot-dip galvanized per ASTM F 2329.

F. Post-Installed Anchors: Torque-controlled expansion anchors.

1. Material for Interior Locations: Carbon-steel components zinc plated to comply with ASTM B 633 or ASTM F 1941 (ASTM F 1941M), Class Fe/Zn 5, unless otherwise indicated.
2. Material for Exterior Locations and Where Stainless Steel Is Indicated: Alloy [**Group 1 (A1)**] [**Group 2 (A4)**] stainless-steel bolts, ASTM F 593 (ASTM F 738M), and nuts, ASTM F 594 (ASTM F 836M).

2.4 MISCELLANEOUS MATERIALS

A. Shop Primers: Provide primers that comply with Section 099113 "Exterior Painting," Section 099123 Interior Painting," and Section 099600 "High-Performance Coatings."

B. Universal Shop Primer: Fast-curing, lead- and chromate-free, universal modified-alkyd primer complying with MPI#79 and compatible with topcoat.

1. Use primer containing pigments that make it easily distinguishable from zinc-rich primer.

C. Shop Primer for Galvanized Steel: Primer formulated for exterior use over zinc-coated metal and compatible with finish paint systems indicated.

D. Galvanizing Repair Paint: High-zinc-dust-content paint complying with SSPC-Paint 20 and compatible with paints specified to be used over it.

E. Bituminous Paint: Cold-applied asphalt emulsion complying with ASTM D 1187/D 1187M.

F. Nonshrink, Nonmetallic Grout: Factory-packaged, nonstaining, noncorrosive, nongaseous grout complying with ASTM C 1107/C 1107M. Provide grout specifically recommended by manufacturer for interior and exterior applications.

G. Concrete: Comply with requirements in Section 033000 "Cast-in-Place Concrete" for normal-weight, air-entrained, concrete with a minimum 28-day compressive strength of 3000 psi (20 MPa).

2.5 FABRICATION, GENERAL

A. Shop Assembly: Preassemble items in the shop to greatest extent possible. Disassemble units only as necessary for shipping and handling limitations. Use connections that maintain structural value of joined pieces. Clearly mark units for reassembly and coordinated installation.

B. Cut, drill, and punch metals cleanly and accurately. Remove burrs and ease edges to a radius of approximately 1/32 inch (1 mm) unless otherwise indicated. Remove sharp or rough areas on exposed surfaces.

C. Form bent-metal corners to smallest radius possible without causing grain separation or otherwise impairing work.

D. Form exposed work with accurate angles and surfaces and straight edges.

E. Weld corners and seams continuously to comply with the following:

1. Use materials and methods that minimize distortion and develop strength and corrosion resistance of base metals.
2. Obtain fusion without undercut or overlap.
3. Remove welding flux immediately.
4. At exposed connections, finish exposed welds and surfaces smooth and blended so no roughness shows after finishing and contour of welded surface matches that of adjacent surface.

F. Form exposed connections with hairline joints, flush and smooth, using concealed fasteners or welds where possible. Where exposed fasteners are required, use Phillips flat-head (countersunk) fasteners unless otherwise indicated. Locate joints where least conspicuous.

G. Fabricate seams and other connections that are exposed to weather in a manner to exclude water. Provide weep holes where water may accumulate.

H. Cut, reinforce, drill, and tap metal fabrications as indicated to receive finish hardware, screws, and similar items.

I. Provide for anchorage of type indicated; coordinate with supporting structure. Space anchoring devices to secure metal fabrications rigidly in place and to support indicated loads.

J. Where units are indicated to be cast into concrete or built into masonry, equip with integrally welded steel strap anchors, 1/8 by 1-1/2 inches (3.2 by 38 mm), with a minimum 6-inch (150-mm) embedment and 2-inch (50-mm) hook, not less than 8 inches (200 mm) from ends and corners of units and 24 inches (600 mm) o.c., unless otherwise indicated.

2.6 MISCELLANEOUS FRAMING AND SUPPORTS

A. General: Provide steel framing and supports not specified in other Sections as needed to complete the Work.

B. Fabricate units from steel shapes, plates, and bars of welded construction unless otherwise indicated. Fabricate to sizes, shapes, and profiles indicated and as necessary to receive adjacent construction.

1. Fabricate units from slotted channel framing where indicated.
2. Furnish inserts for units installed after concrete is placed.

C. Fabricate supports for operable partitions from continuous steel beams of sizes indicated and as recommended by partition manufacturer with attached bearing plates, anchors, and braces as indicated and as recommended by partition manufacturer. Drill or punch bottom flanges of beams to receive partition track hanger rods; locate holes where indicated on operable partition Shop Drawings.

D. Galvanize miscellaneous framing and supports at exterior locations and interior locations where indicated.

E. Prime miscellaneous framing and supports with zinc-rich primer where indicated.

2.7 SHELF ANGLES

A. Fabricate shelf angles from steel angles of sizes indicated and for attachment to concrete framing. Provide horizontally slotted holes to receive 3/4-inch (19-mm) bolts, spaced not more than 6 inches (150 mm) from ends and 24 inches (600 mm) o.c., unless otherwise indicated.

1. Provide mitered and welded units at corners.

2. Provide open joints in shelf angles at expansion and control joints. Make open joint approximately 2 inches (50 mm) larger than expansion or control joint.

B. For cavity walls, provide vertical channel brackets to support angles from backup masonry and concrete.

C. Galvanize and prime shelf angles located in exterior walls.

2.8 METAL LADDERS

A. General:

1. Comply with ANSI A14.3, except for elevator pit ladders.
2. For elevator pit ladders, comply with ASME A17.1/CSA B44.

B. Steel Ladders:

1. Space side rails 18 inches apart unless otherwise indicated.
2. Side rails: Continuous, 1/2-by-2-1/2-inch steel flat bars, with eased edges.
3. Rungs: 1-inch-diameter steel bars.
4. Fit rungs in centerline of siderails; plug-weld and grind smooth on outer rail faces.
5. Provide nonslip surfaces on top of each rung, either by coating rung with aluminum-oxide granules set in epoxy-resin adhesive or by using a type of manufactured rung filled with aluminum-oxide grout.

6. Provide platforms as indicated fabricated from welded or pressure-locked steel bar grating, supported by steel angles. Limit openings in gratings to no more than 1/2 inch in least dimension.
7. Support each ladder at top and bottom and not more than 60 inches o.c. with welded or bolted steel brackets.
8. Galvanize and prime ladders, including brackets.

2.9 ALTERNATING TREAD DEVICES

A. Landings, Treads, and Mounting Base: shall be stamped and formed from single piece material. Stock shapes, hand forming, or welded remnants shall not be permitted. All stamped parts shall have integrally formed rigidizing bends and shall be spot welded to stringers of like material.

B. Welds: shall be a minimum of 8 welds per tread, and 12 welds each on the landing and mounting base. Each weld shall be quality controlled and be capable of withstanding a minimum of 2800 lbs. in shear.

C. Pedestrian Surfaces: shall be punched through with upset non-skid openings.

D. Riser Spacing: shall be equally spaced to within 3/16” for adjacent risers and to widths 3/8” for any two non-adjacent risers on a stair.

E. Handrails: shall be contoured for body guidance and underarm support and shall be attached to the outside stringers and landings by bolting.

F. Landing Reinforcement: shall be with ¼” steel angle notched and punched and factory welded to the landing at the points of a handrail attachment.

G. Rubber Foot Divider: shall be affixed to the central portion of the landing. A rubber bumper strip shall be attached or will be provided for field gluing to the central stringer.

H. Acceptable Manufacturers: As manufactured by Lapeyre Stair, Inc. or approved equivalent.

I. Finish: Manufacturer's standard safety yellow powder coat finish.

2.10 ELEVATOR PIT SUMP COVERS

A. Fabricate from welded or pressure-locked steel bar grating Limit openings in gratings to no more than 3/4 inch (19 mm) in least dimension.

B. Provide steel angle supports as indicated.

2.11 MISCELLANEOUS STEEL TRIM

A. Unless otherwise indicated, fabricate units from steel shapes, plates, and bars of profiles shown with continuously welded joints and smooth exposed edges. Miter corners and use concealed field splices where possible.

B. Provide cutouts, fittings, and anchorages as needed to coordinate assembly and installation with other work.

1. Provide with integrally welded steel strap anchors for embedding in concrete or masonry construction.

C. Galvanize and prime exterior miscellaneous steel trim.

D. Prime miscellaneous steel trim with zinc-rich primer.

2.12 LOOSE BEARING AND LEVELING PLATES

A. Provide loose bearing and leveling plates for steel items bearing on masonry or concrete construction. Drill plates to receive anchor bolts and for grouting.

B. Galvanize plates.

2.13 LOOSE STEEL LINTELS

A. Fabricate loose steel lintels from steel angles and shapes of size indicated for openings and recesses in masonry walls and partitions at locations indicated. Fabricate in single lengths for each opening unless otherwise indicated. Weld adjoining members together to form a single unit where indicated.

B. Size loose lintels to provide bearing length at each side of openings equal to 1/12 of clear span, but not less than 8 inches (200 mm) unless otherwise indicated.

C. Galvanize and prime loose steel lintels located in exterior walls.

2.14 STEEL WELD PLATES AND ANGLES

A. Provide steel weld plates and angles not specified in other Sections, for items supported from concrete construction as needed to complete the Work. Provide each unit with no fewer than two integrally welded steel strap anchors for embedding in concrete.

2.15 FINISHES, GENERAL

A. Finish metal fabrications after assembly.

B. Finish exposed surfaces to remove tool and die marks and stretch lines, and to blend into surrounding surface.

2.16 STEEL AND IRON FINISHES

A. Galvanizing: Hot-dip galvanize items as indicated to comply with ASTM A 153/A 153M for steel and iron hardware and with ASTM A 123/A 123M for other steel and iron products.

1. Do not quench or apply post galvanizing treatments that might interfere with paint adhesion.

B. Preparation for Shop Priming Galvanized Items: After galvanizing, thoroughly clean railings of grease, dirt, oil, flux, and other foreign matter, and treat with metallic phosphate process.

C. Shop prime iron and steel items not indicated to be galvanized unless they are to be embedded in concrete, sprayed-on fireproofing, or masonry, or unless otherwise indicated.

1. Shop prime with universal shop primer unless zinc-rich primer is indicated.

D. Preparation for Shop Priming: Prepare surfaces to comply with requirements indicated below:

1. Exterior Items: SSPC-SP 6/NACE No. 3, "Commercial Blast Cleaning."
2. Items Indicated to Receive Zinc-Rich Primer: SSPC-SP 6/NACE No. 3, "Commercial Blast Cleaning."
3. Items Indicated to Receive Primers Specified in Section 099600 "High-Performance Coatings": SSPC-SP 6/NACE No. 3, "Commercial Blast Cleaning."
4. Other Items: SSPC-SP 3, "Power Tool Cleaning."

E. Shop Priming: Apply shop primer to comply with SSPC-PA 1, "Paint Application Specification No. 1: Shop, Field, and Maintenance Painting of Steel," for shop painting.

1. Stripe paint corners, crevices, bolts, welds, and sharp edges.

2.17 ALUMINUM FINISHES

A. As-Fabricated Finish: AA-M12.

B. Clear Anodic Finish: AAMA 611, Class I, AA-M12C22A41.

PART 3 - EXECUTION

3.1 INSTALLATION, GENERAL

A. Cutting, Fitting, and Placement: Perform cutting, drilling, and fitting required for installing metal fabrications. Set metal fabrications accurately in location, alignment, and elevation; with edges and surfaces level, plumb, true, and free of rack; and measured from established lines and levels.

B. Fit exposed connections accurately together to form hairline joints. Weld connections that are not to be left as exposed joints but cannot be shop welded because of shipping size limitations. Do not weld, cut, or abrade surfaces of exterior units that have been hot-dip galvanized after fabrication and are for bolted or screwed field connections.

C. Field Welding: Comply with the following requirements:

1. Use materials and methods that minimize distortion and develop strength and corrosion resistance of base metals.
2. Obtain fusion without undercut or overlap.
3. Remove welding flux immediately.
4. At exposed connections, finish exposed welds and surfaces smooth and blended so no roughness shows after finishing and contour of welded surface matches that of adjacent surface.

D. Fastening to In-Place Construction: Provide anchorage devices and fasteners where metal fabrications are required to be fastened to in-place construction. Provide threaded fasteners for use with concrete and masonry inserts, toggle bolts, through bolts, lag screws, wood screws, and other connectors.

E. Provide temporary bracing or anchors in formwork for items that are to be built into concrete, masonry, or similar construction.

F. Corrosion Protection: Coat concealed surfaces of aluminum that come into contact with grout, concrete, masonry, wood, or dissimilar metals with the following:

1. Cast Aluminum: Heavy coat of bituminous paint.
2. Extruded Aluminum: Two coats of clear lacquer.

3.2 INSTALLING MISCELLANEOUS FRAMING AND SUPPORTS

A. General: Install framing and supports to comply with requirements of items being supported, including manufacturers' written instructions and requirements indicated on Shop Drawings.

B. Anchor supports for operable partitions, overhead doors, overhead grilles securely to, and rigidly brace from, building structure.

3.3 INSTALLING BEARING AND LEVELING PLATES

A. Clean concrete and masonry bearing surfaces of bond-reducing materials, and roughen to improve bond to surfaces. Clean bottom surface of plates.

B. Set bearing and leveling plates on wedges, shims, or leveling nuts. After bearing members have been positioned and plumbed, tighten anchor bolts. Do not remove wedges or shims but, if protruding, cut off flush with edge of bearing plate before packing with nonshrink grout. Pack grout solidly between bearing surfaces and plates to ensure that no voids remain.

3.4 ADJUSTING AND CLEANING

A. Touchup Painting: Immediately after erection, clean field welds, bolted connections, and abraded areas. Paint uncoated and abraded areas with the same material as used for shop painting to comply with SSPC-PA 1 for touching up shop-painted surfaces.

1. Apply by brush or spray to provide a minimum 2.0-mil (0.05-mm) dry film thickness.

B. Touchup Painting: Cleaning and touchup painting of field welds, bolted connections, and abraded areas of shop paint are specified in Section 099113 "Exterior Painting" and Section 099123 "Interior Painting."

C. Galvanized Surfaces: Clean field welds, bolted connections, and abraded areas and repair galvanizing to comply with ASTM A 780/A 780M.

END OF SECTION 055000

SECTION 055113 – METAL STAIRS

PART 1 - GENERAL

1.1 RELATED DOCUMENTS

A. Drawings and general provisions of the Contract, including General and Supplementary Conditions and Division 01 Specification Sections, apply to this Section.

1.2 SUMMARY

A. Section Includes:

1. Preassembled steel stairs with concrete-filled treads.
2. Steel tube railings and guardrail infill attached to metal stairs.
3. Steel tube handrails attached to walls adjacent to metal stairs.

B. Related Requirements:

1. Section 033000 "Cast-in-Place Concrete" for concrete fill for stair treads and platforms.
2. Section 055213 "Pipe and Tube Railings" for pipe and tube railings.

1.3 COORDINATION

A. Coordinate selection of shop primers with topcoats to be applied over them. Comply with paint and coating manufacturers' written recommendations to ensure that shop primers and topcoats are compatible with one another.

B. Coordinate installation of anchorages for metal stairs. Furnish setting drawings, templates, and directions for installing anchorages, including sleeves, concrete inserts, anchor bolts, and items with integral anchors, that are to be embedded in concrete or masonry. Deliver such items to Project site in time for installation.

C. Coordinate locations of hanger rods and struts with other work so that they do not encroach on required stair width and are within the fire-resistance-rated stair enclosure.

1.4 ACTION SUBMITTALS

A. Product Data: For metal pan stairs and the following:

1. Prefilled metal-pan-stair treads.
2. Precast concrete treads.
3. Paint products.

B. Shop Drawings: Include plans, elevations, sections, details, and attachments to other work.

C. Delegated-Design Submittal: For stairs, guards, and railings, including analysis data signed and sealed by the professional engineer licensed in Delaware responsible for their preparation.

1.5 INFORMATIONAL SUBMITTALS

A. Welding certificates.

B. Paint Compatibility Certificates: From manufacturers of topcoats applied over shop primers certifying that shop primers are compatible with topcoats.

1.6 QUALITY ASSURANCE

A. Installer Qualifications: Fabricator of products.

B. Welding Qualifications: Qualify procedures and personnel according to the following:

1. AWS D1.1/D1.1M, "Structural Welding Code - Steel."
2. AWS D1.3/D1.3M, "Structural Welding Code - Sheet Steel."

PART 2 - PRODUCTS

2.1 PERFORMANCE REQUIREMENTS

A. Delegated Design: Engage a professional engineer licensed in Delaware to design stairs, guards, and railings.

B. Structural Performance of Stairs: Metal stairs shall withstand the effects of gravity loads and the following loads and stresses within limits and under conditions indicated:

1. Uniform Load: 100 lbf/sq. ft. (4.79 kN/sq. m).
2. Concentrated Load: 300 lbf (1.33 kN) applied on an area of 4 sq. in. (2580 sq. mm).
3. Uniform and concentrated loads need not be assumed to act concurrently.
4. Stair Framing: Capable of withstanding stresses resulting from railing loads in addition to loads specified above.
5. Limit deflection of treads, platforms, and framing members to L/240 or 1/4 inch (6.4 mm), whichever is less.

C. Structural Performance of Railings: Railings shall withstand the effects of gravity loads and the following loads and stresses within limits and under conditions indicated:

1. Handrails and Top Rails of Guards:

   a. Uniform load of 50 lbf/ft. (0.73 kN/m) applied in any direction.
   b. Concentrated load of 200 lbf (0.89 kN) applied in any direction.
   c. Uniform and concentrated loads need not be assumed to act concurrently.

2. Infill of Guards:

   a. Concentrated load of 50 lbf (0.22 kN) applied horizontally on an area of 1 sq. ft. (0.093 sq. m).
   b. Infill load and other loads need not be assumed to act concurrently.

2.2 METALS

A. Metal Surfaces, General: Provide materials with smooth, flat surfaces unless otherwise indicated. For components exposed to view in the completed Work, provide materials without seam marks, roller marks, rolled trade names, or blemishes.

B. Steel Plates, Shapes, and Bars: ASTM A 36/A 36M.

C. Steel Tubing: ASTM A 500 (cold formed).

D. Cast Iron: Either gray iron, ASTM A 48/A 48M, or malleable iron, ASTM A 47/A 47M, unless otherwise indicated.

E. Uncoated, Cold-Rolled Steel Sheet: ASTM A 1008/A 1008M, structural steel, Grade 25 (Grade 170), unless another grade is required by design loads; exposed.

F. Woven-Wire Mesh: Intermediate-crimp, square pattern, 2-inch (50-mm) woven-wire mesh, made from 0.135-inch (3.5-mm) nominal diameter wire complying with ASTM A 510 (ASTM A 510M).

2.3 FASTENERS

A. General: Provide zinc-plated fasteners with coating complying with ASTM B 633 or ASTM F 1941 (ASTM F 1941M), Class Fe/Zn 12 for exterior use, and Class Fe/Zn 5 where built into exterior walls. Select fasteners for type, grade, and class required.

B. Bolts and Nuts: Regular hexagon-head bolts, ASTM A 307, Grade A (ASTM F 568M, Property Class 4.6); with hex nuts, ASTM A 563 (ASTM A 563M); and, where indicated, flat washers.

C. Anchor Bolts: ASTM F 1554, Grade 36, of dimensions indicated; with nuts, ASTM A 563 (ASTM A 563M); and, where indicated, flat washers.

D. Post-Installed Anchors: Torque-controlled expansion anchors capable of sustaining, without failure, a load equal to six times the load imposed when installed in unit masonry and four times the load imposed when installed in concrete, as determined by testing according to ASTM E 488/E 488M, conducted by a qualified independent testing agency.

1. Material for Interior Locations: Carbon-steel components zinc plated to comply with ASTM B 633 or ASTM F 1941 (ASTM F 1941M), Class Fe/Zn 5, unless otherwise indicated.

2.4 MISCELLANEOUS MATERIALS

A. Shop Primers: Provide primers that comply with Section 099600 "High-Performance Coatings."

B. Universal Shop Primer: Fast-curing, lead- and chromate-free, universal modified-alkyd primer complying with MPI#79 and compatible with topcoat.

1. Use primer containing pigments that make it easily distinguishable from zinc-rich primer.

C. Bituminous Paint: Cold-applied asphalt emulsion complying with ASTM D 1187/D 1187M.

D. Concrete Materials and Properties: Comply with requirements in Section 033000 "Cast-in-Place Concrete" for normal-weight, air-entrained, ready-mix concrete with a minimum 28-day compressive strength of 3000 psi (20 MPa) unless otherwise indicated.

E. Welded Wire Reinforcement: ASTM A 185/A 185M, 6 by 6 inches (152 by 152 mm), W1.4 by W1.4, unless otherwise indicated.

2.5 FABRICATION, GENERAL

A. Provide complete stair assemblies, including metal framing, hangers, struts, guards, railings, clips, brackets, bearing plates, and other components necessary to support and anchor stairs and platforms on supporting structure.

1. Join components by welding unless otherwise indicated.
2. Use connections that maintain structural value of joined pieces.

B. Preassembled Stairs: Assemble stairs in shop to greatest extent possible. Disassemble units only as necessary for shipping and handling limitations. Clearly mark units for reassembly and coordinated installation.

C. Cut, drill, and punch metals cleanly and accurately. Remove burrs and ease edges to a radius of approximately 1/32 inch (1 mm) unless otherwise indicated. Remove sharp or rough areas on exposed surfaces.

D. Form bent-metal corners to smallest radius possible without causing grain separation or otherwise impairing work.

E. Form exposed work with accurate angles and surfaces and straight edges.

F. Weld connections to comply with the following:

1. Use materials and methods that minimize distortion and develop strength and corrosion resistance of base metals.
2. Obtain fusion without undercut or overlap.
3. Remove welding flux immediately.
4. Weld exposed corners and seams continuously unless otherwise indicated.
5. At exposed connections, finish exposed welds to comply with NOMMA's "Voluntary Joint Finish Standards" for Type 3 welds.

G. Form exposed connections with hairline joints, flush and smooth, using concealed fasteners where possible. Where exposed fasteners are required, use Phillips flat-head (countersunk) screws or bolts unless otherwise indicated. Locate joints where least conspicuous.

2.6 STEEL-FRAMED STAIRS

A. Manufacturers:

1. Alfab, Inc.
2. American Stair, Inc.
3. Sharon Companies Ltd. (The).

B. Stair Framing:

1. Fabricate stringers of steel plates or channels.

a. Provide closures for exposed ends of channel stringers.

2. Construct platforms of steel plate or channel headers and miscellaneous framing members as needed to comply with performance requirements.
3. Weld stringers to headers; weld framing members to stringers and headers.
4. Where stairs are enclosed by gypsum board assemblies, provide hanger rods or struts to support landings from floor construction above or below. Locate hanger rods and struts where they will not encroach on required stair width and will be within the fire-resistance-rated stair enclosure.
5. Where masonry walls support metal stairs, provide temporary supporting struts designed for erecting steel stair components before installing masonry.

C. Metal-Pan Stairs: Form risers, subtread pans, and subplatforms to configurations shown from steel sheet of thickness needed to comply with performance requirements but not less than 0.0677 inch (1.7 mm).

1. Steel Sheet: Uncoated cold-rolled steel sheet, unless otherwise indicated.
2. Directly weld metal pans to stringers; locate welds on top of subtreads where they will be concealed by concrete fill. Do not weld risers to stringers.
3. Shape metal pans to include nosing integral with riser.
4. Attach abrasive nosings to risers.
5. At Contractor's option, provide stair assemblies with metal-pan subtreads filled with reinforced concrete during fabrication.
6. Provide subplatforms of configuration indicated or, if not indicated, the same as subtreads. Weld subplatforms to platform framing.

a. Smooth Soffit Construction: Construct subplatforms with smooth soffits.

D. Perforated Stainless Steel Riser: At Stair C110A.

1. Configuration: As shown on drawings.

2.7 STAIR RAILINGS

A. Steel Tube Railings: Fabricate railings to comply with requirements indicated for design, dimensions, details, finish, and member sizes, including wall thickness of tube, post spacings, and anchorage, but not less than that needed to withstand indicated loads.

1. Configuration: As shown on drawings

B. Welded Connections: Fabricate railings with welded connections. Cope components at connections to provide close fit, or use fittings designed for this purpose. Weld all around at connections, including at fittings.

1. Finish welds to comply with NOMMA's "Voluntary Joint Finish Standards" for Type 1 welds: no evidence of a welded joint as shown in NAAMM AMP 521.

C. Form changes in direction of railings as follows:

1. As detailed.

D. Close exposed ends of railing members with prefabricated end fittings.

E. Provide wall returns at ends of wall-mounted handrails unless otherwise indicated. Close ends of returns unless clearance between end of rail and wall is 1/4 inch (6 mm) or less.

F. Connect posts to stair framing by direct welding unless otherwise indicated.

G. Brackets, Flanges, Fittings, and Anchors: Provide wall brackets, end closures, flanges, miscellaneous fittings, and anchors for interconnecting components and for attaching to other work. Furnish inserts and other anchorage devices for connecting to concrete or masonry work.

1. For galvanized railings, provide galvanized fittings, brackets, fasteners, sleeves, and other ferrous-metal components.
2. For nongalvanized railings, provide nongalvanized ferrous-metal fittings, brackets, fasteners, and sleeves, except galvanize anchors embedded in exterior masonry and concrete construction.
3. Provide type of bracket with flange tapped for concealed anchorage to threaded hanger bolt and that provides 1-1/2-inch (38-mm) clearance from inside face of handrail to finished wall surface.

H. Fillers: Provide fillers made from steel plate, or other suitably crush-resistant material, where needed to transfer wall bracket loads through wall finishes to structural supports. Size fillers to suit wall finish thicknesses and to produce adequate bearing area to prevent bracket rotation and overstressing of substrate.

2.8 FINISHES

A. Finish metal stairs after assembly.

B. Preparation for Shop Priming: Prepare uncoated ferrous-metal surfaces to comply with SSPC-SP 3, "Power Tool Cleaning."

C. Apply shop primer to uncoated surfaces of metal stair components, except those with galvanized finishes and those to be embedded in concrete or masonry unless otherwise indicated. Comply with SSPC-PA 1, "Paint Application Specification No. 1: Shop, Field, and Maintenance Painting of Steel," for shop painting.

PART 3 - EXECUTION

3.1 INSTALLING METAL PAN STAIRS

A. Fastening to In-Place Construction: Provide anchorage devices and fasteners where necessary for securing metal stairs to in-place construction. Include threaded fasteners for concrete and masonry inserts, through-bolts, lag bolts, and other connectors.

B. Cutting, Fitting, and Placement: Perform cutting, drilling, and fitting required for installing metal stairs. Set units accurately in location, alignment, and elevation, measured from established lines and levels and free of rack.

C. Install metal stairs by welding stair framing to steel structure or to weld plates cast into concrete unless otherwise indicated.

D. Provide temporary bracing or anchors in formwork for items that are to be built into concrete, masonry, or similar construction.

E. Fit exposed connections accurately together to form hairline joints. Weld connections that are not to be left as exposed joints but cannot be shop welded because of shipping size limitations. Do not weld, cut, or abrade surfaces of exterior units that have been hot-dip galvanized after fabrication and are for bolted or screwed field connections.

F. Field Welding: Comply with requirements for welding in "Fabrication, General" Article.

G. Place and finish concrete fill for treads and platforms to comply with Section 033000 "Cast-in-Place Concrete."

1. Install abrasive nosings with anchors fully embedded in concrete. Center nosings on tread width.

H. Install precast concrete treads with adhesive supplied by manufacturer.

3.2 INSTALLING RAILINGS

A. Adjust railing systems before anchoring to ensure matching alignment at abutting joints. Space posts at spacing indicated or, if not indicated, as required by design loads. Plumb posts in each direction. Secure posts and rail ends to building construction as follows:

1. Anchor posts to steel by welding to steel supporting members.
2. Anchor handrail ends to concrete and masonry with steel round flanges welded to rail ends and anchored with postinstalled anchors and bolts.

B. Attach handrails to wall with wall brackets. Locate brackets as indicated or, if not indicated, at spacing required to support structural loads. Secure wall brackets to building construction as required to comply with performance requirements.

1. For concrete and solid masonry anchorage, use drilled-in expansion shields and hanger or lag bolts.
2. For hollow masonry anchorage, use toggle bolts.

3.3 ADJUSTING AND CLEANING

A. Touchup Painting: Immediately after erection, clean field welds, bolted connections, and abraded areas of shop paint, and paint exposed areas with same material as used for shop painting to comply with SSPC-PA 1 for touching up shop-painted surfaces.

1. Apply by brush or spray to provide a minimum 2.0-mil (0.05-mm) dry film thickness.

B. Touchup Painting: Cleaning and touchup painting of field welds, bolted connections, and abraded areas of shop paint are specified in Section 099600 "High-Performance Coatings."

END OF SECTION 055113

SECTION 055213 - PIPE AND TUBE RAILINGS

PART 1 - GENERAL

1.1 RELATED DOCUMENTS

A. Drawings and general provisions of the Contract, including General and Supplementary Conditions and Division 01 Specification Sections, apply to this Section.

1.2 SUMMARY

A. Section Includes:

1. Steel pipe and tube railings.

B. Related Requirements:

1. Section 055112 "Metal Pan Stairs" for steel tube railings associated with metal pan stairs.

1.3 COORDINATION

A. Coordinate selection of shop primers with topcoats to be applied over them. Comply with paint and coating manufacturers' written recommendations to ensure that shop primers and topcoats are compatible with one another.

B. Coordinate installation of anchorages for railings. Furnish setting drawings, templates, and directions for installing anchorages, including sleeves, concrete inserts, anchor bolts, and items with integral anchors, that are to be embedded in concrete or masonry. Deliver such items to Project site in time for installation.

C. Schedule installation so wall attachments are made only to completed walls. Do not support railings temporarily by any means that do not satisfy structural performance requirements.

1.4 ACTION SUBMITTALS

A. Product Data: For the following:

1. Manufacturer's product lines of mechanically connected railings.
2. Railing brackets.
3. Grout, anchoring cement, and paint products.

B. Shop Drawings: Include plans, elevations, sections, details, and attachments to other work.

C. Delegated-Design Submittal: For guards and railings, including analysis data signed and sealed by the professional engineer licensed in Delaware responsible for their preparation.

1.5 QUALITY ASSURANCE

A. Welding Qualifications: Qualify procedures and personnel according to the following:

1. AWS D1.1/D1.1M, "Structural Welding Code - Steel."
2. AWS D1.2/D1.2M, "Structural Welding Code - Aluminum."
3. AWS D1.6/D1.6M, "Structural Welding Code - Stainless Steel."

1.6 DELIVERY, STORAGE, AND HANDLING

A. Protect mechanical finishes on exposed surfaces from damage by applying a strippable, temporary protective covering before shipping.

1.7 FIELD CONDITIONS

A. Field Measurements: Verify actual locations of walls and other construction contiguous with metal fabrications by field measurements before fabrication.

PART 2 - PRODUCTS

2.1 MANUFACTURERS

A. Steel Pipe and Tube Railings:

1. Manufacturers: Subject to compliance with requirements, available manufacturers offering products that may be incorporated into the Work include, but are not limited to, the following:

a. Wagner, R & B, Inc.

B. Source Limitations: Obtain each type of railing from single source from single manufacturer.

2.2 PERFORMANCE REQUIREMENTS

A. Delegated Design: Engage a professional engineer licensed in Delaware to design guards and railings, including attachment to building construction.

B. Structural Performance: Railings, including attachment to building construction, shall withstand the effects of gravity loads and the following loads and stresses within limits and under conditions indicated:

1. Handrails and Top Rails of Guards:

a. Uniform load of 50 lbf/ ft. (0.73 kN/m) applied in any direction.
b. Concentrated load of 200 lbf (0.89 kN) applied in any direction.
c. Uniform and concentrated loads need not be assumed to act concurrently.

2. Infill of Guards:

a. Concentrated load of 50 lbf (0.22 kN) applied horizontally on an area of 1 sq. ft. (0.093 sq. m).
b. Infill load and other loads need not be assumed to act concurrently.

C. Thermal Movements: Allow for thermal movements from ambient and surface temperature changes.

1. Temperature Change: 120 deg F, ambient; 180 deg F material surfaces.

2.3 METALS, GENERAL

A. Metal Surfaces, General: Provide materials with smooth surfaces, without seam marks, roller marks, rolled trade names, stains, discolorations, or blemishes.

B. Brackets, Flanges, and Anchors: Cast or formed metal of same type of material and finish as supported rails unless otherwise indicated.

1. Provide type of bracket with flange tapped for concealed anchorage to threaded hanger bolt and that provides 1-1/2-inch (38-mm) clearance from inside face of handrail to finished wall surface.

2.4 STEEL AND IRON

A. Tubing: ASTM A 500 (cold formed).

B. Pipe: ASTM A 53/A 53M, Type F or Type S, Grade A, Standard Weight (Schedule 40), unless another grade and weight are required by structural loads.

1. Provide galvanized finish for exterior installations and where indicated.

C. Plates, Shapes, and Bars: ASTM A 36/A 36M.

D. Woven-Wire Mesh: Intermediate-crimp, square pattern, 2-inch (50-mm) woven-wire mesh, made from 0.134-inch- (3.42-mm-) diameter wire complying with ASTM A 510 (ASTM A 510M).

2.5 FASTENERS

A. General: Provide the following:

1. Ungalvanized-Steel Railings: Plated steel fasteners complying with ASTM B 633 or ASTM F 1941 (ASTM F 1941M), Class Fe/Zn 5 for zinc coating.
2. Hot-Dip Galvanized Railings: Type 304 stainless-steel or hot-dip zinc-coated steel fasteners complying with ASTM A 153/A 153M or ASTM F 2329 for zinc coating.

B. Fasteners for Anchoring Railings to Other Construction: Select fasteners of type, grade, and class required to produce connections suitable for anchoring railings to other types of construction indicated and capable of withstanding design loads.

C. Fasteners for Interconnecting Railing Components:

1. Provide concealed fasteners for interconnecting railing components and for attaching them to other work, unless otherwise indicated.

D. Post-Installed Anchors: Torque-controlled expansion anchors capable of sustaining, without failure, a load equal to 6 times the load imposed when installed in unit masonry and 4 times the load imposed when installed in concrete, as determined by testing according to ASTM E 488/E 488M, conducted by a qualified independent testing agency.

1. Material for Interior Locations: Carbon-steel components zinc-plated to comply with ASTM B 633 or ASTM F 1941 (ASTM F 1941M), Class Fe/Zn 5, unless otherwise indicated.
2. Material for Exterior Locations and Where Stainless Steel Is Indicated: Alloy Group 1 (A1) stainless-steel bolts, ASTM F 593 (ASTM F 738M), and nuts, ASTM F 594 (ASTM F 836M).

2.6 MISCELLANEOUS MATERIALS

A. Welding Rods and Bare Electrodes: Select according to AWS specifications for metal alloy welded.

B. Etching Cleaner for Galvanized Metal: Complying with MPI#25.

C. Galvanizing Repair Paint: High-zinc-dust-content paint complying with SSPC-Paint 20 and compatible with paints specified to be used over it.

D. Shop Primers: Provide primers that comply with Section 099113 "Exterior Painting,"Section 099123 "Interior Painting," and Section 099600 "High-Performance Coatings."

E. Bituminous Paint: Cold-applied asphalt emulsion complying with ASTM D 1187/D 1187M.

F. Nonshrink, Nonmetallic Grout: Factory-packaged, nonstaining, noncorrosive, nongaseous grout complying with ASTM C 1107/C 1107M. Provide grout specifically recommended by manufacturer for interior and exterior applications.

G. Anchoring Cement: Factory-packaged, nonshrink, nonstaining, hydraulic-controlled expansion cement formulation for mixing with water at Project site to create pourable anchoring, patching, and grouting compound.

1. Water-Resistant Product: At exterior locations provide formulation that is resistant to erosion from water exposure without needing protection by a sealer or waterproof coating and that is recommended by manufacturer for exterior use.

2.7 FABRICATION

A. General: Fabricate railings to comply with requirements indicated for design, dimensions, member sizes and spacing, details, finish, and anchorage, but not less than that required to support structural loads.

B. Shop assemble railings to greatest extent possible to minimize field splicing and assembly. Disassemble units only as necessary for shipping and handling limitations. Clearly mark units for reassembly and coordinated installation. Use connections that maintain structural value of joined pieces.

C. Cut, drill, and punch metals cleanly and accurately. Remove burrs and ease edges to a radius of approximately 1/32 inch (1 mm) unless otherwise indicated. Remove sharp or rough areas on exposed surfaces.

D. Form work true to line and level with accurate angles and surfaces.

E. Fabricate connections that are exposed to weather in a manner that excludes water. Provide weep holes where water may accumulate.

F. Cut, reinforce, drill, and tap as indicated to receive finish hardware, screws, and similar items.

G. Connections: Fabricate railings with welded connections unless otherwise indicated.

H. Welded Connections: Cope components at connections to provide close fit, or use fittings designed for this purpose. Weld all around at connections, including at fittings.

1. Use materials and methods that minimize distortion and develop strength and corrosion resistance of base metals.
2. Obtain fusion without undercut or overlap.

3. Remove flux immediately.
4. At exposed connections, finish exposed surfaces smooth and blended so no roughness shows after finishing and welded surface matches contours of adjoining surfaces.

I. Form Changes in Direction as Follows:

1. As detailed.

J. For changes in direction made by bending, use jigs to produce uniform curvature for each repetitive configuration required. Maintain cross section of member throughout entire bend without buckling, twisting, cracking, or otherwise deforming exposed surfaces of components.

K. Close exposed ends of railing members with prefabricated end fittings.

L. Provide wall returns at ends of wall-mounted handrails unless otherwise indicated. Close ends of returns unless clearance between end of rail and wall is 1/4 inch (6 mm) or less.

M. Brackets, Flanges, Fittings, and Anchors: Provide wall brackets, flanges, miscellaneous fittings, and anchors to interconnect railing members to other work unless otherwise indicated.

1. At brackets and fittings fastened to plaster or gypsum board partitions, provide crush-resistant fillers or other means to transfer loads through wall finishes to structural supports and prevent bracket or fitting rotation and crushing of substrate.

N. Provide inserts and other anchorage devices for connecting railings to concrete or masonry work. Fabricate anchorage devices capable of withstanding loads imposed by railings. Coordinate anchorage devices with supporting structure.

O. For railing posts set in concrete, provide stainless-steel sleeves not less than 6 inches (150 mm) long with inside dimensions not less than 1/2 inch (13 mm) greater than outside dimensions of post, with metal plate forming bottom closure.

P. Toe Boards: Where indicated, provide toe boards at railings around openings and at edge of open-sided floors and platforms. Fabricate to dimensions and details indicated.

2.8 STEEL AND IRON FINISHES

A. Galvanized Railings:

1. Hot-dip galvanize exterior steel railings, including hardware, after fabrication.
2. Comply with ASTM A 123/A 123M for hot-dip galvanized railings.
3. Comply with ASTM A 153/A 153M for hot-dip galvanized hardware.
4. Do not quench or apply post galvanizing treatments that might interfere with paint adhesion.
5. Fill vent and drain holes that are exposed in the finished Work, unless indicated to remain as weep holes, by plugging with zinc solder and filing off smooth.

B. For galvanized railings, provide hot-dip galvanized fittings, brackets, fasteners, sleeves, and other ferrous components.

C. Preparing Galvanized Railings for Shop Priming: After galvanizing, thoroughly clean railings of grease, dirt, oil, flux, and other foreign matter, and treat with etching cleaner.

D. For nongalvanized-steel railings, provide nongalvanized ferrous-metal fittings, brackets, fasteners, and sleeves; however, galvanize anchors to be embedded in exterior concrete or masonry.

E. Preparation for Shop Priming: Prepare uncoated ferrous-metal surfaces to comply with requirements indicated below:

1. Exterior Railings: SSPC-SP 6/NACE No. 3, "Commercial Blast Cleaning."
2. Railings Indicated to Receive Zinc-Rich Primer: SSPC-SP 6/NACE No. 3, "Commercial Blast Cleaning."
3. Railings Indicated to Receive Primers Specified in Section 099600 "High-Performance Coatings": SSPC-SP 6/NACE No. 3, "Commercial Blast Cleaning."
4. Other Railings: SSPC-SP 3, "Power Tool Cleaning."

F. Primer Application: Apply shop primer to prepared surfaces of railings unless otherwise indicated. Comply with requirements in SSPC-PA 1, "Shop, Field, and Maintenance Painting of Steel," for shop painting. Primer need not be applied to surfaces to be embedded in concrete or masonry.

1. Shop prime uncoated railings with primers specified in Section 099113 "Exterior Painting" and Section 099123 "Interior Painting" unless primers specified in Section 099600 "High-Performance Coatings" are indicated.
2. Do not apply primer to galvanized surfaces.

PART 3 - EXECUTION

3.1 EXAMINATION

A. Examine plaster and gypsum board assemblies, where reinforced to receive anchors, to verify that locations of concealed reinforcements are clearly marked for Installer. Locate reinforcements and mark locations if not already done.

3.2 INSTALLATION, GENERAL

A. Fit exposed connections together to form tight, hairline joints.

B. Perform cutting, drilling, and fitting required for installing railings. Set railings accurately in location, alignment, and elevation; measured from established lines and levels and free of rack.

1. Do not weld, cut, or abrade surfaces of railing components that are coated or finished after fabrication and that are intended for field connection by mechanical or other means without further cutting or fitting.
2. Set posts plumb within a tolerance of 1/16 inch in 3 feet (2 mm in 1 m).
3. Align rails so variations from level for horizontal members and variations from parallel with rake of steps and ramps for sloping members do not exceed 1/4 inch in 12 feet (6 mm in 3.5 m).

C. Control of Corrosion: Prevent galvanic action and other forms of corrosion by insulating metals and other materials from direct contact with incompatible materials.

1. Coat, with a heavy coat of bituminous paint, concealed surfaces of aluminum that are in contact with grout, concrete, masonry, wood, or dissimilar metals.

D. Adjust railings before anchoring to ensure matching alignment at abutting joints.

E. Fastening to In-Place Construction: Use anchorage devices and fasteners where necessary for securing railings and for properly transferring loads to in-place construction.

3.3 RAILING CONNECTIONS

A. Welded Connections: Use fully welded joints for permanently connecting railing components. Comply with requirements for welded connections in "Fabrication" Article whether welding is performed in the shop or in the field.

B. Expansion Joints: Install expansion joints at locations indicated but not farther apart than required to accommodate thermal movement. Provide slip-joint internal sleeve extending 2 inches (50 mm) beyond joint on either side, fasten internal sleeve securely to one side, and locate joint within 6 inches (150 mm) of post.

3.4 ANCHORING POSTS

A. Form or core-drill holes not less than 5 inches (125 mm) deep and 3/4 inch (20 mm) larger than OD of post for installing posts in concrete. Clean holes of loose material, insert posts, and fill annular space between post and concrete with nonshrink, nonmetallic grout mixed and placed to comply with anchoring material manufacturer's written instructions.

B. Cover anchorage joint with flange of same metal as post, welded to post after placing anchoring material.

3.5 ATTACHING RAILINGS

A. Anchor railing ends at walls with round flanges anchored to wall construction and connected to railing ends using nonwelded connections.

B. Anchor railing ends to metal surfaces with flanges bolted to metal surfaces and welded to railing ends.

C. Attach railings to wall with wall brackets, except where end flanges are used. Locate brackets as indicated or, if not indicated, at spacing required to support structural loads.

D. Secure wall brackets and railing end flanges to building construction as follows:

1. For concrete and solid masonry anchorage, use drilled-in expansion shields and hanger or lag bolts.
2. For hollow masonry anchorage, use toggle bolts.
3. For steel-framed partitions, use self-tapping screws fastened to steel framing or to concealed steel reinforcements.
4. For steel-framed partitions, use toggle bolts installed through flanges of steel framing or through concealed steel reinforcements.

3.6 ADJUSTING AND CLEANING

A. Touchup Painting: Immediately after erection, clean field welds, bolted connections, and abraded areas of shop paint, and paint exposed areas with the same material as used for shop painting to comply with SSPC-PA 1 requirements for touching up shop-painted surfaces.

1. Apply by brush or spray to provide a minimum 2.0-mil (0.05-mm) dry film thickness.

B. Touchup Painting: Cleaning and touchup painting of field welds, bolted connections, and abraded areas of shop paint are specified in Section 099113 "Exterior Painting,"Section 099123 "Interior Painting," and Section 099600 "High-Performance Coatings."

C. Galvanized Surfaces: Clean field welds, bolted connections, and abraded areas, and repair galvanizing to comply with ASTM A 780/A 780M.

3.7 PROTECTION

A. Protect finishes of railings from damage during construction period with temporary protective coverings approved by railing manufacturer. Remove protective coverings at time of Substantial Completion.

END OF SECTION 055213

SECTION 061000 - ROUGH CARPENTRY

PART 1 - GENERAL

1.1 RELATED DOCUMENTS

A. Drawings and general provisions of the Contract, including General and Supplementary Conditions and Division 01 Specification Sections, apply to this Section.

1.2 SUMMARY

A. Section Includes:
1. Rooftop equipment bases and support curbs.
2. Wood blocking, cants, and nailers.
3. Plywood backing panels.

B. Related Requirements:
1. Section 061600 "Sheathing."

1.3 DEFINITIONS

A. Exposed Framing: Framing not concealed by other construction.

B. Dimension Lumber: Lumber of 2 inches nominal (38 mm actual) or greater but less than 5 inches nominal (114 mm actual) in least dimension.

C. Timber: Lumber of 5 inches nominal (114 mm actual) or greater in least dimension.

D. Lumber grading agencies, and the abbreviations used to reference them, include the following:

1. NeLMA: Northeastern Lumber Manufacturers' Association.
2. NLGA: National Lumber Grades Authority.
3. RIS: Redwood Inspection Service.
4. SPIB: The Southern Pine Inspection Bureau.
5. WCLIB: West Coast Lumber Inspection Bureau.
6. WWPA: Western Wood Products Association.

1.4 ACTION SUBMITTALS

A. Product Data: For each type of process and factory-fabricated product. Indicate component materials and dimensions and include construction and application details.

1.5 QUALITY ASSURANCE

A. Testing Agency Qualifications: For testing agency providing classification marking for fire-retardant treated material, an inspection agency acceptable to authorities having jurisdiction that periodically

performs inspections to verify that the material bearing the classification marking is representative of the material tested.

1.6 DELIVERY, STORAGE, AND HANDLING

A. Stack lumber flat with spacers beneath and between each bundle to provide air circulation. Protect lumber from weather by covering with waterproof sheeting, securely anchored. Provide for air circulation around stacks and under coverings.

PART 2 - PRODUCTS

2.1 WOOD PRODUCTS, GENERAL

A. Lumber: DOC PS 20 and applicable rules of grading agencies indicated. If no grading agency is indicated, provide lumber that complies with the applicable rules of any rules-writing agency certified by the ALSC Board of Review. Provide lumber graded by an agency certified by the ALSC Board of Review to inspect and grade lumber under the rules indicated.

1. Factory mark each piece of lumber with grade stamp of grading agency.
2. Where nominal sizes are indicated, provide actual sizes required by DOC PS 20 for moisture content specified. Where actual sizes are indicated, they are minimum dressed sizes for dry lumber.
3. Provide dressed lumber, S4S, unless otherwise indicated.

B. Maximum Moisture Content of Lumber: 15 percent unless otherwise indicated.

2.2 WOOD-PRESERVATIVE-TREATED LUMBER

A. Preservative Treatment by Pressure Process: AWPA U1; Use Category UC2 for interior construction not in contact with the ground, Use Category UC3b for exterior construction not in contact with the ground, and Use Category UC4a for items in contact with the ground.

1. Preservative Chemicals: Acceptable to authorities having jurisdiction and containing no arsenic or chromium.

B. Kiln-dry lumber after treatment to a maximum moisture content of 19 percent. Do not use material that is warped or that does not comply with requirements for untreated material.

C. Mark lumber with treatment quality mark of an inspection agency approved by the ALSC Board of Review.

D. Application: Treat items indicated on Drawings, and the following:

1. Wood cants, nailers, curbs, equipment support bases, blocking, stripping, and similar members in connection with roofing, flashing, vapor barriers, and waterproofing.
2. Wood sills, sleepers, blocking, and similar concealed members in contact with masonry or concrete.

2.3 FIRE-RETARDANT-TREATED MATERIALS

A. General: Where fire-retardant-treated materials are indicated, use materials complying with requirements in this article, that are acceptable to authorities having jurisdiction, and with fire-test-response characteristics specified as determined by testing identical products per test method indicated by a qualified testing agency.

B. Fire-Retardant-Treated Lumber and Plywood by Pressure Process: Products with a flame spread index of 25 or less when tested according to ASTM E 84, and with no evidence of significant progressive combustion when the test is extended an additional 20 minutes, and with the flame front not extending more than 10.5 feet (3.2 m) beyond the centerline of the burners at any time during the test.

1. Use treatment that does not promote corrosion of metal fasteners.
2. Interior Type A: Treated materials shall have a moisture content of 28 percent or less when tested according to ASTM D 3201 at 92 percent relative humidity. Use where exterior type is not indicated.

C. Kiln-dry plywood after treatment to a maximum moisture content of 15 percent.

D. Identify fire-retardant-treated wood with appropriate classification marking of qualified testing agency.

E. Application: Treat items indicated on Drawings, and the following:
1. Plywood backing panels.

2.4 MISCELLANEOUS LUMBER

A. General: Provide miscellaneous lumber indicated and lumber for support or attachment of other construction, including the following:

1. Blocking.
2. Nailers.
3. Rooftop equipment bases and support curbs.
4. Cants.

B. For items of dimension lumber size, provide Construction or No. 2 grade lumber and the following species:

1. Hem-fir (north); NLGA.
2. Mixed southern pine; SPIB.
3. Spruce-pine-fir; NLGA.
4. Hem-fir; WCLIB or WWPA.
5. Northern species; NLGA.
6. Eastern softwoods; NeLMA.

C. For concealed boards, provide lumber with 15 percent maximum moisture content and the following species and grades:

1. Mixed southern pine; No. 2 grade; SPIB.
2. Hem-fir or hem-fir (north); Construction or No. 2 Common grade; NLGA, WCLIB, or WWPA.
3. Spruce-pine-fir (south) or spruce-pine-fir; Construction or No. 2 Common grade; NeLMA, NLGA, WCLIB, or WWPA.
4. Eastern softwoods; No. 2 Common grade; NeLMA.
5. Northern species; No. 2 Common grade; NLGA.

D. For blocking not used for attachment of other construction, Utility, Stud, or No. 3 grade lumber of any species may be used provided that it is cut and selected to eliminate defects that will interfere with its attachment and purpose.

E. For blocking and nailers used for attachment of other construction, select and cut lumber to eliminate knots and other defects that will interfere with attachment of other work.

2.5 PLYWOOD BACKING PANELS

A. Equipment Backing Panels: DOC PS 1, fire-retardant treated, in thickness indicated or, if not indicated, not less than 3/4-inch (19-mm) nominal thickness.

2.6 FASTENERS

A. General: Provide fasteners of size and type indicated that comply with requirements specified in this article for material and manufacture.

1. Where rough carpentry is exposed to weather, in ground contact, pressure-preservative treated, or in area of high relative humidity, provide fasteners of Type 304 stainless steel.

B. Nails, Brads, and Staples: ASTM F 1667.

C. Power-Driven Fasteners: NES NER-272.

D. Wood Screws: ASME B18.6.1.

E. Lag Bolts: ASME B18.2.1 (ASME B18.2.3.8M).

F. Bolts: Steel bolts complying with ASTM A 307, Grade A (ASTM F 568M, Property Class 4.6); with ASTM A 563 (ASTM A 563M) hex nuts and, where indicated, flat washers.

G. Expansion Anchors: Anchor bolt and sleeve assembly of material indicated below with capability to sustain, without failure, a load equal to six times the load imposed when installed in unit masonry assemblies and equal to four times the load imposed when installed in concrete as determined by testing per ASTM E 488 conducted by a qualified independent testing and inspecting agency.

1. Material: Carbon-steel components, zinc plated to comply with ASTM B 633, Class Fe/Zn 5.
2. Material: Stainless steel with bolts and nuts complying with ASTM F 593 and ASTM F 594, Alloy Group 1 or 2 (ASTM F 738M and ASTM F 836M, Grade A1 or A4).

PART 3 - EXECUTION

3.1 INSTALLATION, GENERAL

A. Set rough carpentry to required levels and lines, with members plumb, true to line, cut, and fitted. Fit rough carpentry to other construction; scribe and cope as needed for accurate fit. Locate nailers, blocking, grounds, and similar supports to comply with requirements for attaching other construction.

B. Install plywood backing panels by fastening to studs; coordinate locations with utilities requiring backing panels. Install fire-retardant treated plywood backing panels with classification marking of testing agency exposed to view.

C. Provide blocking and framing as indicated and as required to support facing materials, fixtures, specialty items, and trim.

1. Provide metal clips for fastening gypsum board or lath at corners and intersections where framing or blocking does not provide a surface for fastening edges of panels. Space clips not more than 16 inches (406 mm) o.c.

D. Sort and select lumber so that natural characteristics will not interfere with installation or with fastening other materials to lumber. Do not use materials with defects that interfere with function of member or pieces that are too small to use with minimum number of joints or optimum joint arrangement.

E. Comply with AWPA M4 for applying field treatment to cut surfaces of preservative-treated lumber.

1. Use inorganic boron for items that are continuously protected from liquid water.
2. Use copper naphthenate for items not continuously protected from liquid water.

F. Securely attach rough carpentry work to substrate by anchoring and fastening as indicated, complying with the following:

1. NES NER-272 for power-driven fasteners.
2. Table 2304.9.1, "Fastening Schedule," in ICC's International Building Code.

G. Use steel common nails unless otherwise indicated. Select fasteners of size that will not fully penetrate members where opposite side will be exposed to view or will receive finish materials. Make tight connections between members. Install fasteners without splitting wood. Drive nails snug but do not countersink nail heads unless otherwise indicated.

3.2 WOOD BLOCKING, AND NAILER INSTALLATION

A. Install where indicated and where required for attaching other work. Form to shapes indicated and cut as required for true line and level of attached work. Coordinate locations with other work involved.

B. Attach items to substrates to support applied loading. Recess bolts and nuts flush with surfaces unless otherwise indicated.

C. Where wood-preservative-treated lumber is installed adjacent to metal decking, install continuous flexible flashing separator between wood and metal decking.

3.3 PROTECTION

A. Protect wood that has been treated with inorganic boron (SBX) from weather. If, despite protection, inorganic boron-treated wood becomes wet, apply EPA-registered borate treatment. Apply borate solution by spraying to comply with EPA-registered label.

B. Protect rough carpentry from weather. If, despite protection, rough carpentry becomes wet, apply EPA-registered borate treatment. Apply borate solution by spraying to comply with EPA-registered label.

END OF SECTION 061000

SECTION 061600 - SHEATHING

PART 1 - GENERAL

1.1 RELATED DOCUMENTS

A. Drawings and general provisions of the Contract, including General and Supplementary Conditions and Division 01 Specification Sections, apply to this Section.

1.2 SUMMARY

A. Section Includes:

1. Wall sheathing.
2. Sheathing joint and penetration treatment.

B. Related Requirements:

1. Section 061000 "Rough Carpentry" for plywood backing panels.
2. Section 072110 "Insulating Air Barriers" for water-resistive insulating air barrier applied over wall sheathing.

1.3 ACTION SUBMITTALS

A. Product Data: For each type of process and factory-fabricated product. Indicate component materials and dimensions and include construction and application details.

1. Include data for wood-preservative treatment from chemical treatment manufacturer and certification by treating plant that treated plywood complies with requirements. Indicate type of preservative used and net amount of preservative retained.
2. Include data for fire-retardant treatment from chemical treatment manufacturer and certification by treating plant that treated plywood complies with requirements. Include physical properties of treated materials.
3. For fire-retardant treatments, include physical properties of treated plywood both before and after exposure to elevated temperatures, based on testing by a qualified independent testing agency according to ASTM D 5516.
4. For products receiving a waterborne treatment, include statement that moisture content of treated materials was reduced to levels specified before shipment to Project site.
5. Include copies of warranties from chemical treatment manufacturers for each type of treatment.

1.4 DELIVERY, STORAGE, AND HANDLING

A. Stack panels flat with spacers beneath and between each bundle to provide air circulation. Protect sheathing from weather by covering with waterproof sheeting, securely anchored. Provide for air circulation around stacks and under coverings.

PART 2 - PRODUCTS

2.1 PERFORMANCE REQUIREMENTS

A. Fire-Test-Response Characteristics: For assemblies with fire-resistance ratings, provide materials and construction identical to those of assemblies tested for fire resistance per ASTM E 119 by a testing and inspecting agency acceptable to authorities having jurisdiction.

1. Fire-Resistance Ratings: Indicated by design designations from UL's "Fire Resistance Directory.".

2.2 WOOD PANEL PRODUCTS

A. Plywood: Either DOC PS 1 or DOC PS 2 unless otherwise indicated.

B. Thickness: As needed to comply with requirements specified, but not less than thickness indicated.

C. Factory mark panels to indicate compliance with applicable standard.

2.3 PRESERVATIVE-TREATED PLYWOOD

A. Preservative Treatment by Pressure Process: AWPA U1; Use Category UC2 for interior construction not in contact with the ground, Use Category UC3b for exterior construction not in contact with the ground, and Use Category UC4a for items in contact with the ground.

1. Preservative Chemicals: Acceptable to authorities having jurisdiction and containing no arsenic or chromium.

B. Mark plywood with appropriate classification marking of an inspection agency acceptable to authorities having jurisdiction.

C. Application: Treat items indicated on Drawings and plywood in contact with masonry or concrete or used with roofing, flashing, vapor barriers, and waterproofing.

2.4 FIRE-RETARDANT-TREATED PLYWOOD

A. General: Where fire-retardant-treated materials are indicated, use materials complying with requirements in this article that are acceptable to authorities having jurisdiction and with fire-test-response characteristics specified as determined by testing identical products per test method indicated by a qualified testing agency.

B. Fire-Retardant-Treated Plywood by Pressure Process: Products with a flame-spread index of 25 or less when tested according to ASTM E 84, and with no evidence of significant progressive combustion when the test is extended an additional 20 minutes, and with the flame front not extending more than 10.5 feet (3.2 m) beyond the centerline of the burners at any time during the test.

1. Use treatment that does not promote corrosion of metal fasteners.
2. Exterior Type: Treated materials shall comply with requirements specified above for fire-retardant-treated plywood by pressure process after being subjected to accelerated weathering according to ASTM D 2898. Use for exterior locations and where indicated.

3. Interior Type A: Treated materials shall have a moisture content of 28 percent or less when tested according to ASTM D 3201 at 92 percent relative humidity. Use where exterior type is not indicated.
4. Design Value Adjustment Factors: Treated lumber plywood shall be tested according ASTM D 5516 and design value adjustment factors shall be calculated according to ASTM D 6305. Span ratings after treatment shall be not less than span ratings specified.

C. Kiln-dry material after treatment to a maximum moisture content of 15 percent. Do not use material that is warped or does not comply with requirements for untreated material.

D. Identify fire-retardant-treated plywood with appropriate classification marking of qualified testing agency.

E. Application: Treat plywood indicated on Drawings, and the following:

2.5 WALL SHEATHING

A. Plywood Wall Sheathing: Exterior, Structural I sheathing.

1. Span Rating: Not less than 16/0.
2. Nominal Thickness: Not less than 1/2 inch (13 mm).

B. Glass-Mat Gypsum Wall Sheathing: ASTM C 1177/1177M.

1. Products: Subject to compliance with requirements, provide one of the following:

a. CertainTeed Corporation; GlasRoc.
b. G-P Gypsum Corporation; Dens-Glass Gold.
c. National Gypsum Company; Gold Bond e (2) XP.
d. Temple-Inland Inc.; GreenGlass
e. United States Gypsum Co.; Securock.

2. Type and Thickness: Regular, 1/2 inch (13 mm) thick.

2.6 FASTENERS

A. General: Provide fasteners of size and type indicated that comply with requirements specified in this article for material and manufacture.

1. For wall sheathing, provide fasteners with hot-dip zinc coating complying with ASTM A 153/A 153M.

B. Nails, Brads, and Staples: ASTM F 1667.

C. Power-Driven Fasteners: NES NER-272.

1. of more than 800 hours according to ASTM B 117.

D. Screws for Fastening Gypsum Sheathing to Cold-Formed Metal Framing: Steel drill screws, in length recommended by sheathing manufacturer for thickness of sheathing to be attached, with organic-polymer

or other corrosion-protective coating having a salt-spray resistance of more than 800 hours according to ASTM B 117.

1. For steel framing less than 0.0329 inch (0.835 mm) thick, use screws that comply with ASTM C 1002.
2. For steel framing from 0.033 to 0.112 inch (0.84 to 2.84 mm) thick, use screws that comply with ASTM C 954.

2.7 SHEATHING JOINT-AND-PENETRATION TREATMENT MATERIALS

A. Sealant for Glass-Mat Gypsum Sheathing: Silicone emulsion sealant complying with ASTM C 834, compatible with sheathing tape and sheathing and recommended by tape and sheathing manufacturers for use with glass-fiber sheathing tape and for covering exposed fasteners.

1. Sheathing Tape: Self-adhering glass-fiber tape, minimum 2 inches (50 mm) wide, 10 by 10 or 10 by 20 threads/inch (390 by 390 or 390 by 780 threads/m), of type recommended by sheathing and tape manufacturers for use with silicone emulsion sealant in sealing joints in glass-mat gypsum sheathing and with a history of successful in-service use.

2.8 MISCELLANEOUS MATERIALS

A. Adhesives for Field Gluing Panels to Framing: Formulation complying with ASTM D 3498 that is approved for use with type of construction panel indicated by manufacturers of both adhesives and panels.

PART 3 - EXECUTION

3.1 INSTALLATION, GENERAL

A. Do not use materials with defects that impair quality of sheathing or pieces that are too small to use with minimum number of joints or optimum joint arrangement. Arrange joints so that pieces do not span between fewer than three support members.

B. Cut panels at penetrations, edges, and other obstructions of work; fit tightly against abutting construction unless otherwise indicated.

C. Securely attach to substrate by fastening as indicated, complying with the following:

1. NES NER-272 for power-driven fasteners.
2. Table 2304.9.1, "Fastening Schedule," in ICC's "International Building Code."

D. Coordinate wall sheathing installation with flashing and joint-sealant installation so these materials are installed in sequence and manner that prevent exterior moisture from passing through completed assembly.

E. Do not bridge building expansion joints; cut and space edges of panels to match spacing of structural support elements.

F. Coordinate sheathing installation with installation of materials installed over sheathing so sheathing is not exposed to precipitation or left exposed at end of the workday when rain is forecast.

3.2 WOOD STRUCTURAL PANEL INSTALLATION

A. General: Comply with applicable recommendations in APA Form No. E30, "Engineered Wood Construction Guide," for types of structural-use panels and applications indicated.

B. Fastening Methods: Fasten panels as indicated below:

1. Wall and Roof Sheathing:
   a. Screw to cold-formed metal framing.
   b. Space panels 1/8 inch (3 mm) apart at edges and ends.

3.3 GYPSUM SHEATHING INSTALLATION

A. Comply with GA-253 and with manufacturer's written instructions.
1. Fasten gypsum sheathing to cold-formed metal framing with screws.
2. Install boards with a 3/8-inch (9.5-mm) gap where non-load-bearing construction abuts structural elements.
3. Install boards with a 1/4-inch (6.4-mm) gap where they abut masonry or similar materials that might retain moisture, to prevent wicking.

B. Apply fasteners so heads bear tightly against face of sheathing, but do not cut into facing.

C. Horizontal Installation: Install sheathing with V-grooved edge down and tongue edge up. Interlock tongue with groove to bring long edges in contact with edges of adjacent boards without forcing. Abut ends of boards over centers of studs, and stagger end joints of adjacent boards not less than one stud spacing. Attach boards at perimeter and within field of board to each steel stud.

1. Space fasteners approximately 8 inches (200 mm) o.c. and set back a minimum of 3/8 inch (9.5 mm) from edges and ends of boards.
2. For sheathing under stucco cladding, boards may be initially tacked in place with screws if overlying self-furring metal lath is screw-attached through sheathing to studs immediately after sheathing is installed.

D. Vertical Installation: Install board vertical edges centered over studs. Abut ends and edges of each board with those of adjacent boards. Attach boards at perimeter and within field of board to each stud.

1. Space fasteners approximately 8 inches (200 mm) o.c. and set back a minimum of 3/8 inch (9.5 mm) from edges and ends of boards.
2. For sheathing under stucco cladding, boards may be initially tacked in place with screws if overlying self-furring metal lath is screw-attached through sheathing to studs immediately after sheathing is installed.

E. Seal sheathing joints according to sheathing manufacturer's written instructions.
1. Apply glass-fiber sheathing tape to glass-mat gypsum sheathing joints and apply and trowel silicone emulsion sealant to embed entire face of tape in sealant. Apply sealant to exposed fasteners with a trowel so fasteners are completely covered. Seal other penetrations and openings.

END OF SECTION 061600

SECTION 064023 - INTERIOR ARCHITECTURAL WOODWORK

PART 1 - GENERAL

1.1 RELATED DOCUMENTS

A. Drawings and general provisions of the Contract, including General and Supplementary Conditions and Division 01 Specification Sections, apply to this Section.

1.2 SUMMARY

A. This Section includes the following:

1. Interior standing and running trim.
2. Custom Plastic-laminate cabinets.
3. Custom Plastic-laminate countertops.
4. Custom Solid-surfacing-material countertops.
5. Custom Solid-surfacing at curtain wall and storefront sills.
6. Shop finishing of interior woodwork.

B. Related Sections include the following:

1. Division 06 Section "Rough Carpentry" for wood furring, blocking, shims, and hanging strips required for installing woodwork and concealed within other construction before woodwork installation.

2. Division 09 “Wood Veneer Wall Panels” for panels at front of stage.

3. Division 12 Section “Manufactured Wood Casework” for general casework of stock design and related countertops.

1.3 DEFINITIONS

A. Interior architectural woodwork includes wood furring, blocking, shims, and hanging strips for installing woodwork items unless concealed within other construction before woodwork installation.

1.4 SUBMITTALS

A. Product Data: For each type of product indicated, including cabinet hardware and accessories and finishing materials and processes.

B. Product Data: For panel products high-pressure decorative laminate, adhesive for bonding plastic laminate, solid-surfacing material, cabinet hardware and accessories, and finishing materials and processes.

C. Shop Drawings: Show location of each item, dimensioned plans and elevations, large-scale details, attachment devices, and other components.

1. Show details full size.
2. Show locations and sizes of furring, blocking, and hanging strips, including concealed blocking and reinforcement specified in other Sections.
3. Show locations and sizes of cutouts and holes for plumbing fixtures and other items installed in architectural woodwork.

D. Samples for Initial Selection:

1. Shop-applied transparent finishes.
2. Shop-applied opaque finishes.
3. Plastic laminates.
4. PVC edge material.
5. Thermoset decorative panels.
6. Solid-surfacing materials.

E. Samples for Verification:

1. Lumber with or for transparent finish, not less than 5 inches (125 mm) wide by 24 inches (600 mm) long, for each species and cut, finished on 1 side and 1 edge.
2. Veneer leaves representative of and selected from flitches to be used for transparent-finished woodwork.
3. Veneer-faced panel products with or for transparent finish, 8 by 10 inches (200 by 250 mm), for each species and cut. Include at least one face-veneer seam and finish as specified.
4. Lumber and panel products with shop-applied opaque finish, 50 sq. in. (300 sq. cm) for lumber and 8 by 10 inches (200 by 250 mm) for panels, for each finish system and color, with 1/2 of exposed surface finished.
5. Plastic laminates, 8 by 10 inches (200 by 250 mm), for each type, color, pattern, and surface finish, with 1 sample applied to core material and specified edge material applied to 1 edge.
6. Solid-surfacing materials, 6 inches (150 mm) square.
7. Corner pieces as follows:

   a. Cabinet-front frame joints between stiles and rails, as well as exposed end pieces, 18 inches (450 mm) high by 18 inches (450 mm) wide by 6 inches (150 mm) deep.
   b. Miter joints for standing trim.

8. Exposed cabinet hardware and accessories, one unit for each type and finish.

F. Product Certificates: For each type of product, signed by product manufacturer.

G. Qualification Data: For Installer.

1.5 QUALITY ASSURANCE

A. Installer Qualifications: Certified participant in AWI's Quality Certification Program.

B. Source Limitations: Engage a qualified woodworking firm to assume undivided responsibility for production of interior architectural woodwork with sequence-matched wood veneers.

C. Quality Standard: Unless otherwise indicated, comply with AWI's "Architectural Woodwork Quality Standards" for grades of interior architectural woodwork indicated for construction, finishes, installation, and other requirements.

1. Provide AWI Quality Certification Program labels indicating that woodwork, including installation, complies with requirements of grades specified.

2. Reference QCP project number 12.0866.

1.6 DELIVERY, STORAGE, AND HANDLING

A. Do not deliver woodwork until painting and similar operations that could damage woodwork have been completed in installation areas. If woodwork must be stored in other than installation areas, store only in

areas where environmental conditions comply with requirements specified in "Project Conditions" Article.

1.7 PROJECT CONDITIONS

A. Environmental Limitations: Do not deliver or install woodwork until building is enclosed, wet work is complete, and HVAC system is operating and maintaining temperature between 60 and 90 deg F (16 and 32 deg C) and relative humidity between 25 and 55 percent during the remainder of the construction period.

B. Field Measurements: Where woodwork is indicated to fit to other construction, verify dimensions of other construction by field measurements before fabrication, and indicate measurements on Shop Drawings. Coordinate fabrication schedule with construction progress to avoid delaying the Work.

1. Locate concealed framing, blocking, and reinforcements that support woodwork by field measurements before being enclosed, and indicate measurements on Shop Drawings.
2. Established Dimensions: Where field measurements cannot be made without delaying the Work, establish dimensions and proceed with fabricating woodwork without field measurements. Provide allowance for trimming at site, and coordinate construction to ensure that actual dimensions correspond to established dimensions.

1.8 COORDINATION

A. Coordinate sizes and locations of framing, blocking, furring, reinforcements, and other related units of Work specified in other Sections to ensure that interior architectural woodwork can be supported and installed as indicated.

B. Hardware Coordination: Distribute copies of approved hardware schedule specified in Division 08 Section "Door Hardware (Scheduled by Describing Products)" to fabricator of architectural woodwork; coordinate Shop Drawings and fabrication with hardware requirements.

PART 2 - PRODUCTS

2.1 WOODWORK FABRICATORS

A. Available Fabricators: Subject to compliance with requirements, fabricators offering interior architectural woodwork that may be incorporated into the Work include, but are not limited to, the following:

2.2 MATERIALS

A. General: Provide materials that comply with requirements of AWI's quality standard for each type of woodwork and quality grade specified, unless otherwise indicated.

B. Wood Species for Opaque Finish: Any closed-grain hardwood.

C. Wood Products: Comply with the following:

1. Hardboard: AHA A135.4.
2. Medium-Density Fiberboard: ANSI A208.2, Grade MD.
3. Particleboard: ANSI A208.1, Grade M-2-Exterior Glue.
4. Softwood Plywood: DOC PS 1, Medium Density Overlay.
5. Veneer-Faced Panel Products (Hardwood Plywood): HPVA HP-1.

D. Thermoset Decorative Panels: Particleboard or medium-density fiberboard finished with thermally fused, melamine-impregnated decorative paper complying with LMA SAT-1.

1. Provide PVC or polyester edge banding complying with LMA EDG-1 on components with exposed or semiexposed edges.

E. High-Pressure Decorative Laminate: NEMA LD 3, grades as indicated or, if not indicated, as required by woodwork quality standard.

1. Available Manufacturers: Subject to compliance with requirements, manufacturers offering high-pressure decorative laminates that may be incorporated into the Work include, but are not limited to, the following:

a. Abet Laminati, Inc.
b. Arborite; Division of ITW Canada, Inc.
c. Formica Corporation.
d. Lamin-Art, Inc.
e. Nevamar Company, LLC; Decorative Products Div.
f. Panolam Industries International Incorporated.
g. Westinghouse Electric Corp.; Specialty Products Div.
h. Wilsonart International; Div. of Premark International, Inc.

F. Solid-Surfacing Material: Homogeneous solid sheets of filled plastic resin complying with ISSFA-2.

1. Available Manufacturers: Subject to compliance with requirements, manufacturers offering products that may be incorporated into the Work include, but are not limited to, the following:

a. ABA Industries.
b. Avonite, Inc.
c. E. I. du Pont de Nemours and Company.
d. Formica Corporation.
e. LG Chemical, Ltd.
f. Meganite Inc.; a division of the Pyrochem Group.
g. Nevamar Company, LLC; Decorative Products Div.
h. Samsung; Cheil Industries Inc.
i. Swan Corporation (The).
j. Transolid, Inc.
k. Wilsonart International; Div. of Premark International, Inc.

2. Type: Standard type, unless Special Purpose type is indicated.
3. Colors and Patterns: As selected by Architect from manufacturer's full range.

2.3 CABINET HARDWARE AND ACCESSORIES

A. General: Provide cabinet hardware and accessory materials associated with architectural cabinets, except for items specified in Division 08 Section "Door Hardware (Scheduled by Describing Products)."

B. Frameless Concealed Hinges (European Type): BHMA A156.9, B01602, 100 degrees of opening.

C. Back-Mounted Pulls: BHMA A156.9, B02011.

D. Wire Pulls: Back mounted, solid metal, 4 inches (100 mm) long, 5/16 inch (8 mm) in diameter.

E. Catches: Magnetic catches, BHMA A156.9, B03141.

F. Adjustable Shelf Standards and Supports: BHMA A156.9, B04071; with shelf rests, B04081.

G. Shelf Rests: BHMA A156.9, B04013; metal, two-pin type with shelf hold-down clip.

H. Drawer Slides: BHMA A156.9, B05091.

1. Standard Duty (Grade 1, Grade 2, and Grade 3): Side mounted and extending under bottom edge of drawer; full-extension type; epoxy-coated steel with polymer rollers.
2. Box Drawer Slides: Grade 1; for drawers not more than 6 inches (150 mm) high and 24 inches (600 mm) wide.
3. File Drawer Slides: Grade 1HD-100; for drawers more than 6 inches (150 mm) high or 24 inches (600 mm) wide.
4. Pencil Drawer Slides: Grade 1; for drawers not more than 3 inches (75 mm) high and 24 inches (600 mm) wide.
5. Keyboard Slides: Grade 1; for computer keyboard shelves.
6. Trash Bin Slides: Grade 1HD-100; for trash bins not more than 20 inches (500 mm) high and 16 inches (400 mm) wide.

I. Aluminum Slides for Sliding Glass Doors: BHMA A156.9, B07063.

J. Door Locks: BHMA A156.11, E07121.

K. Drawer Locks: BHMA A156.11, E07041.

L. Grommets for Cable Passage through Countertops: 2-inch (51-mm) OD, black, molded-plastic grommets and matching plastic caps with slot for wire passage.

1. Product: Subject to compliance with requirements, provide "OG series" by Doug Mockett & Company, Inc.

M. Paper Slots: 17 inches (432 mm) long by 1-3/4 inches (45 mm) wide by 1 inch (25 mm) deep; black, molded-plastic, paper-slot liner with 1/4-inch (6.4-mm) lip.

1. Product: Subject to compliance with requirements, provide "Model CP-2" by Doug Mockett & Company, Inc.

N. Exposed Hardware Finishes: For exposed hardware, provide finish that complies with BHMA A156.18 for BHMA finish number indicated.

1. Satin Chromium Plated: BHMA 626 for brass or bronze base; BHMA 652 for steel base.

O. For concealed hardware, provide manufacturer's standard finish that complies with product class requirements in BHMA A156.9.

2.4 MISCELLANEOUS MATERIALS

A. Furring, Blocking, Shims, and Hanging Strips: Softwood or hardwood lumber, kiln dried to less than 15 percent moisture content.

B. Anchors: Select material, type, size, and finish required for each substrate for secure anchorage. Provide nonferrous-metal or hot-dip galvanized anchors and inserts on inside face of exterior walls and elsewhere as required for corrosion resistance. Provide toothed-steel or lead expansion sleeves for drilled-in-place anchors.

C. Adhesive for Bonding Plastic Laminate: Unpigmented contact cement.

1. Adhesive for Bonding Edges: Hot-melt adhesive or adhesive specified above for faces.

2.5 FABRICATION, GENERAL

A. Interior Woodwork Grade: Unless otherwise indicated, provide Custom-grade interior woodwork complying with referenced quality standard.

B. Wood Moisture Content: Comply with requirements of referenced quality standard for wood moisture content in relation to ambient relative humidity during fabrication and in installation areas.

C. Fabricate woodwork to dimensions, profiles, and details indicated. Ease edges to radius indicated for the following:

1. Corners of Cabinets and Edges of Solid-Wood (Lumber) Members 3/4 Inch (19 mm) Thick or Less: 1/16 inch (1.5 mm).
2. Edges of Rails and Similar Members More Than 3/4 Inch (19 mm) Thick: 1/8 inch (3 mm).
3. Corners of Cabinets and Edges of Solid-Wood (Lumber) Members and Rails: 1/16 inch (1.5 mm).

D. Complete fabrication, including assembly, finishing, and hardware application, to maximum extent possible before shipment to Project site. Disassemble components only as necessary for shipment and installation. Where necessary for fitting at site, provide ample allowance for scribing, trimming, and fitting.

1. Notify Architect seven days in advance of the dates and times woodwork fabrication will be complete.
2. Trial fit assemblies at fabrication shop that cannot be shipped completely assembled. Install dowels, screws, bolted connectors, and other fastening devices that can be removed after trial fitting. Verify that various parts fit as intended and check measurements of assemblies against field measurements indicated on Shop Drawings before disassembling for shipment.

E. Shop-cut openings to maximum extent possible to receive hardware, appliances, plumbing fixtures, electrical work, and similar items. Locate openings accurately and use templates or roughing-in diagrams to produce accurately sized and shaped openings. Sand edges of cutouts to remove splinters and burrs.

1. Seal edges of openings in countertops with a coat of varnish.

2.6 INTERIOR STANDING AND RUNNING TRIM FOR OPAQUE FINISH

A. Wood Species: Any closed-grain hardwood.

B. Backout or groove backs of flat trim members and kerf backs of other wide, flat members, except for members with ends exposed in finished work.

C. Assemble casings in plant except where limitations of access to place of installation require field assembly.

D. Assemble moldings in plant to maximum extent possible. Miter corners in plant and prepare for field assembly with bolted fittings designed to pull connections together.

2.7 PLASTIC-LAMINATE CABINETS

A. AWI Type of Cabinet Construction: As indicated.

B. Laminate Cladding for Exposed Surfaces: High-pressure decorative laminate complying with the following requirements:

1. Horizontal Surfaces Other Than Tops: Grade HGS.
2. Postformed Surfaces: Grade HGP.
3. Vertical Surfaces: Grade VGS.
4. Edges: Grade HGS PVC tape, 0.018-inch (0.460-mm) minimum thickness, matching laminate in color, pattern, and finish.

C. Materials for Semiexposed Surfaces:

1. Surfaces Other Than Drawer Bodies: High-pressure decorative laminate, Grade VGS.

a. Edges of Plastic-Laminate Shelves: PVC tape, 0.018-inch (0.460-mm) minimum thickness, matching laminate in color, pattern, and finish.
b. For semiexposed backs of panels with exposed plastic-laminate surfaces, provide surface of high-pressure decorative laminate, Grade VGS.

2. Drawer Sides and Backs: Solid-hardwood lumber.
3. Drawer Bottoms: Hardwood plywood.

D. Concealed Backs of Panels with Exposed Plastic Laminate Surfaces: High-pressure decorative laminate, Grade BKL.

E. Colors, Patterns, and Finishes: Provide materials and products that result in colors and textures of exposed laminate surfaces complying with the following requirements:

1. As indicated by laminate manufacturer's designations.
2. Match Architect's sample.
3. As selected by Architect from laminate manufacturer's full range in the following categories:

a. Solid colors, matte finish.
b. Solid colors with core same color as surface, matte finish.
c. Wood grains, matte finish.
d. Patterns, matte finish.

F. Provide dust panels of 1/4-inch (6.4-mm) plywood or tempered hardboard above compartments and drawers, unless located directly under tops.

2.8 PLASTIC-LAMINATE COUNTERTOPS

A. High-Pressure Decorative Laminate Grade: HGS.

B. Colors, Patterns, and Finishes: Provide materials and products that result in colors and textures of exposed laminate surfaces complying with the following requirements:

1. As indicated by manufacturer's designations.
2. Match Architect's sample.
3. As selected by Architect from manufacturer's full range in the following categories:

a. Solid colors, matte finish.
b. Solid colors with core same color as surface, matte finish.
c. Wood grains, matte finish.
d. Patterns, matte finish.

C. Grain Direction: Parallel to cabinet fronts.

D. Edge Treatment: Same material, with eased edges at all 90 degree corners, as laminate cladding on horizontal surfaces.

E. Core Material: Particleboard or medium-density fiberboard.

F. Core Material at Sinks: Particleboard made with exterior glue.

G. Backer Sheet: Provide plastic-laminate backer sheet, Grade BKL, on underside of countertop substrate.

H. Paper Backing: Provide paper backing on underside of countertop substrate.

2.9 SOLID-SURFACING-MATERIAL COUNTERTOPS AND SILLS

A. Solid-Surfacing-Material Thickness: 3/4 inch (19 mm).

B. Colors, Patterns, and Finishes: Provide materials and products that result in colors of solid-surfacing material complying with the following requirements:

1. As selected by Architect from manufacturer's full range.

C. Fabricate tops in one piece, unless otherwise indicated. Comply with solid-surfacing-material manufacturer's written recommendations for adhesives, sealers, fabrication, and finishing.

1. Fabricate tops with shop-applied edges of materials and configuration indicated.
2. Fabricate tops with loose backsplashes for field application.

D. Install integral sink bowls in countertops in shop.

E. Drill holes in countertops for plumbing fittings and soap dispensers in shop.

2.10 SHOP FINISHING

A. Grade: Provide finishes of same grades as items to be finished.

B. General: Shop finish interior architectural woodwork at fabrication shop as specified in this Section. Refer to Division 09 painting Sections for finishing opaque-finished architectural woodwork.

C. Preparation for Finishing: Comply with referenced quality standard for sanding, filling countersunk fasteners, sealing concealed surfaces, and similar preparations for finishing architectural woodwork, as applicable to each unit of work.

1. Backpriming: Apply one coat of sealer or primer, compatible with finish coats, to concealed surfaces of woodwork. Apply two coats to back of paneling and to end-grain surfaces. Concealed surfaces of plastic-laminate-clad woodwork do not require backpriming when surfaced with plastic laminate, backing paper, or thermoset decorative panels.

D. Transparent Finish:

1. AWI Finish System: Conversion varnish.
2. Staining: Match approved sample for color.
3. Wash Coat for Stained Finish: Apply wash-coat sealer to woodwork made from closed-grain wood before staining and finishing.
4. Open Finish for Open-Grain Woods: Do not apply filler to open-grain woods.

5. Filled Finish for Open-Grain Woods: After staining (if any), apply paste wood filler to open-grain woods and wipe off excess. Tint filler to match stained wood.

   a. Apply wash-coat sealer after staining and before filling.

6. Sheen: Satin, 31-45 gloss units measured on 60-degree gloss meter per ASTM D 523.

E. Opaque Finish:

1. AWI Finish System: As designated in Section 099123-Interior Painting.
2. Color: As selected by Architect from manufacturer's full range.
3. Sheen: Satin, 31-45 gloss units measured on 60-degree gloss meter per ASTM D 523.

PART 3 - EXECUTION

3.1 PREPARATION

A. Before installation, condition woodwork to average prevailing humidity conditions in installation areas.

B. Before installing architectural woodwork, examine shop-fabricated work for completion and complete work as required, including removal of packing and backpriming.

3.2 INSTALLATION

A. Grade: Install woodwork to comply with requirements for the same grade specified in Part 2 for fabrication of type of woodwork involved.

B. Assemble woodwork and complete fabrication at Project site to comply with requirements for fabrication in Part 2, to extent that it was not completed in the shop.

C. Install woodwork level, plumb, true, and straight. Shim as required with concealed shims. Install level and plumb (including tops) to a tolerance of 1/8 inch in 96 inches (3 mm in 2400 mm).

D. Scribe and cut woodwork to fit adjoining work, refinish cut surfaces, and repair damaged finish at cuts.

E. Anchor woodwork to anchors or blocking built in or directly attached to substrates. Secure with countersunk, concealed fasteners and blind nailing as required for complete installation. Use fine finishing nails or finishing screws for exposed fastening, countersunk and filled flush with woodwork and matching final finish if transparent finish is indicated.

F. Standing and Running Trim: Install with minimum number of joints possible, using full-length pieces (from maximum length of lumber available) to greatest extent possible. Do not use pieces less than 96 inches (2400 mm) long, except where shorter single-length pieces are necessary. Scarf running joints and stagger in adjacent and related members.

1. Fill gaps, if any, between top of base and wall with plastic wood filler, sand smooth, and finish same as wood base if finished.
2. Install wall railings on indicated metal brackets securely fastened to wall framing.
3. Install standing and running trim with no more variation from a straight line than 1/8 inch in 96 inches (3 mm in 2400 mm).

G. Cabinets: Install without distortion so doors and drawers fit openings properly and are accurately aligned. Adjust hardware to center doors and drawers in openings and to provide unencumbered operation. Complete installation of hardware and accessory items as indicated.

1. Install cabinets with no more than 1/8 inch in 96-inch (3 mm in 2400-mm) sag, bow, or other variation from a straight line.
2. Fasten wall cabinets through back, near top and bottom, at ends and not more than 16 inches (400 mm) o.c. with No. 10 wafer-head screws sized for 1-inch (25-mm) penetration into wood framing, blocking, or hanging strips.

H. Countertops: Anchor securely by screwing through corner blocks of base cabinets or other supports into underside of countertop.

1. Align adjacent solid-surfacing-material countertops and form seams to comply with manufacturer's written recommendations using adhesive in color to match countertop. Carefully dress joints smooth, remove surface scratches, and clean entire surface.
2. Install countertops with no more than 1/8 inch in 96-inch (3 mm in 2400-mm) sag, bow, or other variation from a straight line.
3. Secure backsplashes to tops with concealed metal brackets at 16 inches (400 mm) o.c. and to walls with adhesive.
4. Calk space between backsplash and wall with sealant specified in Division 07 Section "Joint Sealants."

I. Touch up finishing work specified in this Section after installation of woodwork. Fill nail holes with matching filler where exposed.

3.3 ADJUSTING AND CLEANING

A. Repair damaged and defective woodwork, where possible, to eliminate functional and visual defects; where not possible to repair, replace woodwork. Adjust joinery for uniform appearance.

B. Clean, lubricate, and adjust hardware.

C. Clean woodwork on exposed and semi-exposed surfaces. Touch up shop-applied finishes to restore damaged or soiled areas.

END OF SECTION 064023

SECTION 071113 - BITUMINOUS DAMPPROOFING

PART 1 - GENERAL

1.1 RELATED DOCUMENTS

A. Drawings and general provisions of the Contract, including General and Supplementary Conditions and Division 01 Specification Sections, apply to this Section.

1.2 SUMMARY

A. Section Includes:
   1. Cold-applied, cut-back-asphalt dampproofing.

B. Related Requirements:

   1. Section 033000 "Cast-in-Place Concrete" for bituminous vapor retarders.
   2. Section 042000 "Unit Masonry" mortar parge coat on masonry surfaces.
   3. Section 071326 "Self-Adhering Sheet Waterproofing" for waterproofing.

1.3 ACTION SUBMITTALS

A. Product Data: For each type of product.

1.4 FIELD CONDITIONS

A. Weather Limitations: Proceed with application only when existing and forecasted weather conditions permit dampproofing to be performed according to manufacturers' written instructions.

B. Ventilation: Provide adequate ventilation during application of dampproofing in enclosed spaces. Maintain ventilation until dampproofing has cured.

PART 2 - PRODUCTS

2.1 MATERIALS, GENERAL

A. Source Limitations: Obtain primary dampproofing materials and primers from single source from single manufacturer. Provide auxiliary materials recommended in writing by manufacturer of primary materials.

2.2 COLD-APPLIED, CUT-BACK-ASPHALT DAMPPROOFING

A. Manufacturers: Subject to compliance with requirements, provide products by one of the following:

   1. APOC, Inc.; a division of Gardner-Gibson.
   2. BASF Construction Chemicals - Building Systems; Sonneborn Brand Products.

3. Brewer Company (The).
4. ChemMasters, Inc.
5. Euclid Chemical Company (The); an RPM company.
6. Henry Company.
7. Karnak Corporation.
8. Koppers Inc.
9. Malarkey Roofing Products.
10. Meadows, W. R., Inc.

B. Brush and Spray Coats: ASTM D 4479, Type I, fibered.

2.3 AUXILIARY MATERIALS

A. General: Furnish auxiliary materials recommended in writing by dampproofing manufacturer for intended use and compatible with bituminous dampproofing.

B. Cut-Back-Asphalt Primer: ASTM D 41.

C. Asphalt-Coated Glass Fabric: ASTM D 1668, Type I.

D. Patching Compound: Epoxy or latex-modified repair mortar, Asbestos-free fibered, mastic of type recommended in writing by dampproofing manufacturer.

PART 3 - EXECUTION

3.1 EXAMINATION

A. Examine substrates, areas, and conditions with Applicator present, for compliance with requirements for surface smoothness, surface moisture, and other conditions affecting performance of bituminous dampproofing work.

1. Test for surface moisture according to ASTM D 4263.

B. Proceed with application only after substrate construction and penetrating work have been completed and unsatisfactory conditions have been corrected.

3.2 PREPARATION

A. Mask or otherwise protect adjoining exposed surfaces from being stained, spotted, or coated with dampproofing. Prevent dampproofing materials from entering and clogging weep holes and drains.

B. Clean substrates of projections and substances detrimental to the dampproofing work; fill voids, seal joints, and remove bond breakers if any, as recommended in writing by prime material manufacturer.

C. Apply patching compound to patch and fill tie holes, honeycombs, reveals, and other imperfections; cover with asphalt-coated glass fabric.

3.3 APPLICATION, GENERAL

A. Comply with manufacturer's written instructions for dampproofing application, cure time between coats, and drying time before backfilling unless more stringent requirements are indicated.

1. Apply dampproofing to provide continuous plane of protection.
2. Apply additional coats if recommended in writing by manufacturer or to achieve a smooth surface and uninterrupted coverage.

B. Where dampproofing footings and foundation walls, apply from finished-grade line to top of footing; extend over top of footing and down a minimum of 6 inches (150 mm) over outside face of footing.

1. Extend dampproofing 12 inches (300 mm) onto intersecting walls and footings, but do not extend onto surfaces exposed to view when Project is completed.
2. Install flashings and corner protection stripping at internal and external corners, changes in plane, construction joints, cracks, and where shown as "reinforced," by embedding an 8-inch- (200-mm-) wide strip of asphalt-coated glass fabric in a heavy coat of dampproofing. Dampproofing coat for embedding fabric is in addition to other coats required.

3.4 COLD-APPLIED, CUT-BACK-ASPHALT DAMPPROOFING

A. Unparged Masonry Foundation Walls: Apply primer and two brush or spray coats at not less than 1.25 gal./100 sq. ft. (0.5 L/sq. m) for first coat and 1 gal./100 sq. ft. (0.4 L/sq. m) for second coat.

B. Unexposed Face of Masonry Retaining Walls: Apply primer and one brush or spray coat at not less than 1.25 gal. /100 sq. ft. (0.5 L/sq. m).

C. Masonry Backup for Brick Veneer Assemblies: Apply primer and one brush or spray coat at not less than 1 gal. /100 sq. ft. (0.4 L/sq. m).

3.5 CLEANING

A. Clean spillage and soiling from adjacent construction using cleaning agents and procedures recommended in writing by manufacturer of affected construction.

END OF SECTION 071113

SECTION 071326 - SELF-ADHERING SHEET WATERPROOFING

PART 1 - GENERAL

1.1 RELATED DOCUMENTS

A. Drawings and general provisions of the Contract, including General and Supplementary Conditions and Division 01 Specification Sections, apply to this Section.

1.2 SUMMARY

A. Section Includes:

1. Modified bituminous sheet waterproofing.

1.3 ACTION SUBMITTALS

A. Product Data: For each type of product.

1. Include construction details, material descriptions, and tested physical and performance properties of waterproofing.
2. Include manufacturer's written instructions for evaluating, preparing, and treating substrate.

B. Shop Drawings: Show locations and extent of waterproofing and details of substrate joints and cracks, sheet flashings, penetrations, inside and outside corners, tie-ins with adjoining waterproofing, and other termination conditions.

1. Include setting drawings showing layout, sizes, sections, profiles, and joint details of pedestal-supported concrete pavers.

1.4 QUALITY ASSURANCE

A. Installer Qualifications: An entity that employs installers and supervisors who are trained and approved by waterproofing manufacturer.

1.5 FIELD CONDITIONS

A. Environmental Limitations: Apply waterproofing within the range of ambient and substrate temperatures recommended by waterproofing manufacturer. Do not apply waterproofing to a damp or wet substrate.

1. Do not apply waterproofing in snow, rain, fog, or mist.

B. Maintain adequate ventilation during preparation and application of waterproofing materials.

1.6 WARRANTY

A. Manufacturer's Warranty: Manufacturer's standard materials-only warranty in which manufacturer agrees to furnish replacement waterproofing material for waterproofing that does not comply with requirements or that fails to remain watertight within specified warranty period.

1. Warranty Period: Three years from date of Substantial Completion.

PART 2 - PRODUCTS

2.1 MATERIALS, GENERAL

A. Source Limitations for Waterproofing System: Obtain waterproofing materials, protection course, and molded-sheet drainage panels from single source from single manufacturer.

2.2 MODIFIED BITUMINOUS SHEET WATERPROOFING

A. Modified Bituminous Sheet: Minimum 60-mil (1.5-mm) nominal thickness, self-adhering sheet consisting of 56 mils (1.4 mm) of rubberized asphalt laminated on one side to a 4-mil- (0.10-mm-) thick, polyethylene-film reinforcement, and with release liner on adhesive side; formulated for application with primer or surface conditioner that complies with VOC limits of authorities having jurisdiction.

1. Products: Subject to compliance with requirements, provide one of the following:

a. American Hydrotech, Inc; VM75.
b. Carlisle Coatings & Waterproofing Inc; CCW MiraDRI 860/861.
c. Grace Construction Products; W.R. Grace & Co. -- Conn; Bituthene 4000.
d. Meadows, W.R., Inc; SealTight Mel-Rol.
e. Polyguard Products, Inc; Polyguard 650.

2. Physical Properties:

a. Tensile Strength, Membrane: 250 psi (1.7 MPa) minimum; ASTM D 412, Die C, modified.
b. Ultimate Elongation: 300 percent minimum; ASTM D 412, Die C, modified.
c. Low-Temperature Flexibility: Pass at minus 20 deg F (minus 29 deg C); ASTM D 1970.
d. Crack Cycling: Unaffected after 100 cycles of 1/8-inch (3-mm) movement; ASTM C 836.
e. Puncture Resistance: 40 lbf (180 N) minimum; ASTM E 154.
f. Water Absorption: 0.2 percent weight-gain maximum after 48-hour immersion at 70 deg F (21 deg C); ASTM D 570.
g. Water Vapor Permeance: 0.05 perms (2.9 ng/Pa x s x sq. m) maximum; ASTM E 96/E 96M, Water Method.
h. Hydrostatic-Head Resistance: 231 feet minimum; ASTM D 5385.

3. Sheet Strips: Self-adhering, rubberized-asphalt strips of same material and thickness as sheet waterproofing.

2.3 AUXILIARY MATERIALS

A. General: Furnish auxiliary materials recommended by waterproofing manufacturer for intended use and compatible with sheet waterproofing.

1. Furnish liquid-type auxiliary materials that comply with VOC limits of authorities having jurisdiction.

B. Primer: Liquid waterborne primer recommended for substrate by sheet-waterproofing material manufacturer.

C. Surface Conditioner: Liquid, waterborne surface conditioner recommended for substrate by sheet-waterproofing material manufacturer.

D. Liquid Membrane: Elastomeric, two-component liquid, cold fluid applied, of trowel grade or low viscosity.

E. Substrate Patching Membrane: Low-viscosity, two-component, modified asphalt coating.

F. Metal Termination Bars: Aluminum bars, approximately 1 by 1/8 inch (25 by 3 mm) thick, predrilled at 9-inch (229-mm) centers.

G. Protection Course: Fan folded, with a core of extruded-polystyrene board insulation faced on both sides with plastic film, nominal thickness 1/4 inch (6 mm), with compressive strength of not less than 8 psi (55 kPa) per ASTM D 1621, and maximum water absorption by volume of 0.6 percent per ASTM C 272.

2.4 INSULATION

A. Insulation, General: Comply with Section 072100 "Thermal Insulation."

PART 3 - EXECUTION

3.1 EXAMINATION

A. Examine substrates, areas, and conditions, with Installer present, for compliance with requirements and other conditions affecting performance of the waterproofing.

1. Verify that concrete has cured and aged for minimum time period recommended in writing by waterproofing manufacturer.
2. Verify that substrate is visibly dry and within the moisture limits recommended in writing by manufacturer. Test for capillary moisture by plastic sheet method according to ASTM D 4263.
3. Verify that compacted subgrade is dry, smooth, sound, and ready to receive waterproofing sheet.

B. Proceed with installation only after unsatisfactory conditions have been corrected.

3.2 SURFACE PREPARATION

A. Clean, prepare, and treat substrates according to manufacturer's written instructions. Provide clean, dust-free, and dry substrates for waterproofing application.

B. Mask off adjoining surfaces not receiving waterproofing to prevent spillage and overspray affecting other construction.

C. Remove grease, oil, bitumen, form-release agents, paints, curing compounds, and other penetrating contaminants or film-forming coatings from concrete.

D. Remove fins, ridges, mortar, and other projections and fill honeycomb, aggregate pockets, holes, and other voids.

E. Prepare, fill, prime, and treat joints and cracks in substrates. Remove dust and dirt from joints and cracks according to ASTM D 4258.

1. Install sheet strips of width according to manufacturer's written instructions and center over treated construction and contraction joints and cracks exceeding a width of 1/16 inch.

F. Bridge and cover isolation joints, expansion joints, and discontinuous deck-to-wall and deck-to-deck joints with overlapping sheet strips of widths according to manufacturer's written instructions.

1. Invert and loosely lay first sheet strip over center of joint. Firmly adhere second sheet strip to first and overlap to substrate.

G. Corners: Prepare, prime, and treat inside and outside corners according to ASTM D 6135.

1. Install membrane strips centered over vertical inside corners. Install 3/4-inch (19-mm) fillets of liquid membrane on horizontal inside corners and as follows:

a. At footing-to-wall intersections, extend liquid membrane in each direction from corner or install membrane strip centered over corner.

H. Prepare, treat, and seal vertical and horizontal surfaces at terminations and penetrations through waterproofing and at drains and protrusions according to ASTM D 6135.

3.3 MODIFIED BITUMINOUS SHEET-WATERPROOFING APPLICATION

A. Install modified bituminous sheets according to waterproofing manufacturer's written instructions and recommendations in ASTM D 6135.

B. Apply primer to substrates at required rate and allow it to dry. Limit priming to areas that will be covered by sheet waterproofing in same day. Reprime areas exposed for more than 24 hours.

C. Apply and firmly adhere sheets over area to receive waterproofing. Accurately align sheets and maintain uniform 2-1/2-inch- (64-mm-) minimum lap widths and end laps. Overlap and seal seams, and stagger end laps to ensure watertight installation.

1. When ambient and substrate temperatures range between 25 and 40 deg F (minus 4 and plus 5 deg C), install self-adhering, modified bituminous sheets produced for low-temperature application. Do not use low-temperature sheets if ambient or substrate temperature is higher than 60 deg F (16 deg C).

D. Two-Ply Application: Install sheets to form a membrane with lap widths not less than 50 percent of sheet widths, to provide a minimum of two thicknesses of sheet membrane over areas to receive waterproofing.

E. Horizontal Application: Apply sheets from low to high points of decks to ensure that laps shed water.

F. Apply continuous sheets over already-installed sheet strips, bridging substrate cracks, construction, and contraction joints.

G. Seal edges of sheet-waterproofing terminations with mastic.

H. Install sheet-waterproofing and auxiliary materials to tie into adjacent waterproofing.

I. Repair tears, voids, and lapped seams in waterproofing not complying with requirements. Slit and flatten fishmouths and blisters. Patch with sheet waterproofing extending 6 inches (150 mm) beyond repaired areas in all directions.

J. Immediately install protection course with butted joints over waterproofing membrane.

3.4 INSULATION INSTALLATION

A. Install one or more layers of board insulation to achieve required thickness over waterproofed surfaces. Cut and fit to within 3/4 inch (19 mm) of projections and penetrations.

B. On vertical surfaces, set insulation units in adhesive or tape applied according to manufacturer's written instructions.

C. On horizontal surfaces, loosely lay insulation units according to manufacturer's written instructions. Stagger end joints and tightly abut insulation units.

3.5 FIELD QUALITY CONTROL

A. Owner will engage a site representative qualified by waterproofing membrane manufacturer to inspect substrate conditions, surface preparation, membrane application, flashings, protection, and drainage components, and to furnish daily reports to Architect.

B. Prepare test and inspection reports.

3.6 PROTECTION, REPAIR, AND CLEANING

A. Do not permit foot or vehicular traffic on unprotected membrane.

B. Protect waterproofing from damage and wear during remainder of construction period.

C. Protect installed board insulation from damage due to UV light, harmful weather exposures, physical abuse, and other causes. Provide temporary coverings where insulation is subject to abuse and cannot be concealed and protected by permanent construction immediately after installation.

D. Correct deficiencies in or remove waterproofing that does not comply with requirements; repair substrates, reapply waterproofing, and repair sheet flashings.

E. Clean spillage and soiling from adjacent construction using cleaning agents and procedures recommended by manufacturer of affected construction.

END OF SECTION 071326

SECTION 072100 - THERMAL INSULATION

PART 1 - GENERAL

1.1 RELATED DOCUMENTS

A. Drawings and general provisions of the Contract, including General and Supplementary Conditions and Division 01 Specification Sections, apply to this Section.

1.2 SUMMARY

A. This Section includes the following:

1. Perimeter insulation under slabs-on-grade.
2. Cavity-wall insulation.
3. Concealed building insulation.
4. Exposed building insulation.
5. Foamed-in-place insulation.
6. Vapor retarders.

B. Related Sections include the following:

1. Division 04 Section "Unit Masonry" for insulation installed in cavity walls and masonry cells.
2. Division 07 Section "Self-Adhering Sheet Waterproofing" for insulated drainage panels installed with waterproofing.
3. Division 07 Section “EPDM Roofing" for insulation specified as part of roofing construction.
4. Division 09 Section "Gypsum Board Assemblies" for installation in metal-framed assemblies of insulation specified by referencing this Section.
5. Division 22 Section "Plumbing Insulation."
6. Division 23 Section "HVAC Insulation."
7. Division 33 Section "Subdrainage" for insulated drainage panels.

1.3 DEFINITIONS

A. Mineral-Fiber Insulation: Insulation composed of rock-wool fibers, slag-wool fibers, or glass fibers; produced in boards and blanket with latter formed into batts (flat-cut lengths) or rolls.

1.4 PERFORMANCE REQUIREMENTS

A. Plenum Rating: Provide fiber insulation where indicated in ceiling plenums whose test performance is rated as follows for use in plenums as determined by testing identical products per "Erosion Test" and "Mold Growth and Humidity Test" described in UL 181, or on comparable tests from another standard acceptable to authorities having jurisdiction.

1. Erosion Test Results: Insulation shows no visible evidence of cracking, flaking, peeling, or delamination of interior surface of duct assembly, after testing for 4 hours at 2500-fpm (13-m/s) air velocity.
2. Mold Growth and Humidity Test Results: Insulation shows no evidence of mold growth, delamination, or other deterioration due to the effects of high humidity, after inoculation with Chaetomium globosium on all surfaces and storing for 60 days at 100 percent relative humidity in the dark.

1.5 SUBMITTALS

A. Product Data: For each type of product indicated.

1.6 QUALITY ASSURANCE

A. Source Limitations: Obtain each type of building insulation through one source from a single manufacturer.

B. Fire-Test-Response Characteristics: Provide insulation and related materials with the fire-test-response characteristics indicated, as determined by testing identical products per test method indicated below by UL or another testing and inspecting agency acceptable to authorities having jurisdiction. Identify materials with appropriate markings of applicable testing and inspecting agency.

1. Surface-Burning Characteristics: ASTM E 84.
2. Fire-Resistance Ratings: ASTM E 119.
3. Combustion Characteristics: ASTM E 136.

1.7 DELIVERY, STORAGE, AND HANDLING

A. Protect insulation materials from physical damage and from deterioration by moisture, soiling, and other sources. Store inside and in a dry location. Comply with manufacturer's written instructions for handling, storing, and protecting during installation.

B. Protect plastic insulation as follows:

1. Do not expose to sunlight, except to extent necessary for period of installation and concealment.
2. Protect against ignition at all times. Do not deliver plastic insulating materials to Project site before installation time.
3. Complete installation and concealment of plastic materials as rapidly as possible in each area of construction.

PART 2 - PRODUCTS

2.1 MANUFACTURERS

A. In other Part 2 articles where titles below introduce lists, the following requirements apply to product selection:

1. Available Products: Subject to compliance with requirements, products that may be incorporated into the Work include, but are not limited to, products specified.
2. Available Manufacturers: Subject to compliance with requirements, manufacturers offering products that may be incorporated into the Work include, but are not limited to, manufacturers specified.

2.2 FOAM-PLASTIC BOARD INSULATION

A. Extruded-Polystyrene Board Insulation: ASTM C 578, of type and density indicated below, with maximum flame-spread and smoke-developed indexes of 75 and 450, respectively:

1. Available Manufacturers:

a. DiversiFoam Products.
b. Dow Chemical Company.

c. Owens Corning.
d. Pactiv Building Products Division.

2. Type IV, 1.60 lb/cu. ft. (26 kg/cu. m), unless otherwise indicated.

B. Foil-Faced, Polyisocyanurate Board Insulation: ASTM C 1289, Type I, Class 1 or 2, with maximum flame-spread and smoke-developed indexes of 75 and 450, respectively, based on tests performed on unfaced core on thicknesses up to 4 inches (101 mm).

1. Available Manufacturers:

a. Dow Chemical Company.
b. Rmax, Inc.

2.3 GLASS-FIBER BLANKET INSULATION

A. Available Manufacturers:

1. CertainTeed Corporation.
2. Guardian Fiberglass, Inc.
3. Johns Manville.
4. Knauf Fiber Glass.
5. Owens Corning.

B. Unfaced, Glass-Fiber Blanket Insulation: ASTM C 665, Type I (blankets without membrane facing); consisting of fibers; with maximum flame-spread and smoke-developed indexes of 25 and 50, respectively; passing ASTM E 136 for combustion characteristics.

C. Where glass-fiber blanket insulation is indicated by the following thicknesses, provide blankets in batt or roll form with thermal resistances indicated:

1. 3-1/2 inches (89 mm) thick with a thermal resistance of 11 deg F x h x sq. ft./Btu at 75 deg F (1.9 K x sq. m/W at 24 deg C).
2. 3-5/8 inches (92 mm) thick with a thermal resistance of 11 deg F x h x sq. ft./Btu at 75 deg F (1.9 K x sq. m/W at 24 deg C).
3. 5-1/2 inches (140 mm) thick with a thermal resistance of 19 deg F x h x sq. ft./Btu at 75 deg F (3.3 K x sq. m/W at 24 deg C).
4. 6-1/2 inches (165 mm) thick with a thermal resistance of 21 deg F x h x sq. ft./Btu at 75 deg F (3.7 K x sq. m/W at 24 deg C).

2.4 FOAMED-IN-PLACE INSULATION

A. Available Manufacturers:

1. Icynene, Inc.
2. Polymaster, Inc.
3. UCSC.

B. Foamed-in-place Insulation: Open-cell polyurethane or polyicynene gas chemically treated for flame-resistance, processing, and handling characteristics.

2.5 VAPOR RETARDERS

A. Polyethylene Vapor Retarders: ASTM D 4397, 6 mils (0.15 mm) thick, with maximum permeance rating of 0.13 perm (7.5 ng/Pa x s x sq. m).

B. Reinforced-Polyethylene Vapor Retarders: 2 outer layers of polyethylene film laminated to an inner reinforcing layer consisting of either nylon cord or polyester scrim and weighing not less than 25 lb/1000 sq. ft. (12 kg/100 sq. m), with maximum permeance rating of 0.0507 perm (2.9 ng/Pa x s x sq. m).

1. Available Products:

a. Raven Industries Inc.; DURA-SKRIM 6WW.
b. Reef Industries, Inc.; Griffolyn T-65.

C. Fire-Retardant, Reinforced-Polyethylene Vapor Retarders: 2 outer layers of polyethylene film laminated to an inner reinforcing layer consisting of either nonwoven grid of nylon cord or polyester scrim and weighing not less than 22 lb/1000 sq. ft. (10 kg/100 sq. m), with maximum permeance rating of 0.1317 perm (7.56 ng/Pa x s x sq. m) and with flame-spread and smoke-developed indexes of not more than 5 and 60, respectively.

1. Available Products:

a. Raven Industries Inc.; DURA-SKRIM 2FR.
b. Reef Industries, Inc.; Griffolyn T-55 FR.

D. Foil-Polyester-Film Vapor Retarders: 2 layers of 0.5-mil- (0.013-mm-) thick polyester film laminated to an inner layer of 1-mil- (0.025-mm-) thick aluminum foil, with maximum water-vapor transmission rate in flat condition of 0.0 g/h x sq. m and with maximum flame-spread and smoke-developed indexes of 5.

1. Product: Subject to compliance with requirements, provide "Zero Perm" by Alumiseal Corporation.

E. Vapor-Retarder Tape: Pressure-sensitive tape of type recommended by vapor-retarder manufacturer for sealing joints and penetrations in vapor retarder.

F. Vapor-Retarder Fasteners: Pancake-head, self-tapping steel drill screws; with fender washers.

G. Single-Component Nonsag Urethane Sealant: ASTM C 920, Type I, Grade NS, Class 25, Use NT related to exposure, and Use O related to vapor-barrier-related substrates.

H. Adhesive for Vapor Retarders: Product recommended by vapor-retarder manufacturer and with demonstrated capability to bond vapor retarders securely to substrates indicated.

2.6 AUXILIARY INSULATING MATERIALS

A. Vapor-Retarder Tape: Pressure-sensitive tape of type recommended by insulation manufacturers for sealing joints and penetrations in vapor-retarder facings.

B. Adhesive for Bonding Insulation: Product with demonstrated capability to bond insulation securely to substrates indicated without damaging insulation and substrates.

C. Eave Ventilation Troughs: Preformed, rigid fiberboard or plastic sheets designed and sized to fit between roof framing members and to provide cross ventilation between insulated attic spaces and vented eaves.

2.7 INSULATION FASTENERS

A. Adhesively Attached, Spindle-Type Anchors: Plate welded to projecting spindle; capable of holding insulation of thickness indicated securely in position indicated with self-locking washer in place; and complying with the following requirements:

1. Available Products:

   a. AGM Industries, Inc.; Series T TACTOO Insul-Hangers.
   b. Eckel Industries of Canada; Stic-Klip Type N Fasteners.
   c. Gemco; Spindle Type.

2. Plate: Perforated galvanized carbon-steel sheet, 0.030 inch (0.762 mm) thick by 2 inches (50 mm) square.
3. Spindle: Copper-coated, low carbon steel; fully annealed; 0.105 inch (2.67 mm) in diameter; length to suit depth of insulation indicated.

B. Adhesively Attached, Angle-Shaped, Spindle-Type Anchors: Angle welded to projecting spindle; capable of holding insulation of thickness indicated securely in position indicated with self-locking washer in place; and complying with the following requirements:

1. Available Products:

   a. Gemco; 90-Degree Insulation Hangers.

2. Angle: Formed from 0.030-inch- (0.762-mm-) thick, perforated, galvanized carbon-steel sheet with each leg 2 inches (50 mm) square.
3. Spindle: Copper-coated, low carbon steel; fully annealed; 0.105 inch (2.67 mm) in diameter; length to suit depth of insulation indicated.

C. Insulation-Retaining Washers: Self-locking washers formed from 0.016-inch- (0.41-mm-) thick galvanized steel sheet, with beveled edge for increased stiffness, sized as required to hold insulation securely in place, but not less than 1-1/2 inches (38 mm) square or in diameter.

1. Available Products:

   a. AGM Industries, Inc.; RC150.
   b. AGM Industries, Inc.; SC150.
   c. Gemco; Dome-Cap.
   d. Gemco; R-150.
   e. Gemco; S-150.

2. Protect ends with capped self-locking washers incorporating a spring steel insert to ensure permanent retention of cap in the following locations:

   a. Ceiling plenums.
   b. Attic spaces.
   c. Where indicated.

D. Insulation Standoff: Spacer fabricated from galvanized mild-steel sheet for fitting over spindle of insulation anchor to maintain air space of 1 inch (25 mm) between face of insulation and substrate to which anchor is attached.

1. Available Products:

   a. Gemco; Clutch Clip.

E. Anchor Adhesive: Product with demonstrated capability to bond insulation anchors securely to substrates indicated without damaging insulation, fasteners, and substrates.

1. Available Products:

   a. AGM Industries, Inc.; TACTOO Adhesive.
   b. Eckel Industries of Canada; Stic-Klip Type S Adhesive.
   c. Gemco; Tuff Bond Hanger Adhesive.

PART 3 - EXECUTION

3.1 EXAMINATION

A. Examine substrates and conditions, with Installer present, for compliance with requirements of Sections in which substrates and related work are specified and for other conditions affecting performance.

1. Proceed with installation only after unsatisfactory conditions have been corrected.

3.2 PREPARATION

A. Clean substrates of substances harmful to insulation or vapor retarders, including removing projections capable of puncturing vapor retarders or of interfering with insulation attachment.

3.3 INSTALLATION, GENERAL

A. Comply with insulation manufacturer's written instructions applicable to products and application indicated.

B. Install insulation that is undamaged, dry, and unsoiled and that has not been left exposed at any time to ice, rain, and snow.

C. Extend insulation in thickness indicated to envelop entire area to be insulated. Cut and fit tightly around obstructions and fill voids with insulation. Remove projections that interfere with placement.

D. Water-Piping Coordination: If water piping is located within insulated exterior walls, coordinate location of piping to ensure that it is placed on warm side of insulation and insulation encapsulates piping.

E. For preformed insulating units, provide sizes to fit applications indicated and selected from manufacturer's standard thicknesses, widths, and lengths. Apply single layer of insulation units to produce thickness indicated unless multiple layers are otherwise shown or required to make up total thickness.

3.4 INSTALLATION OF UNDER-SLAB INSULATION

A. On horizontal surfaces, loosely lay insulation units according to manufacturer's written instructions. Stagger end joints and tightly abut insulation units.

B. Protect top surface of horizontal insulation from damage during concrete work by applying protection course with joints butted.

3.5 INSTALLATION OF CAVITY-WALL INSULATION

A. On units of foam-plastic board insulation, install pads of adhesive spaced approximately 24 inches (610 mm) o.c. both ways on inside face, and as recommended by manufacturer. Fit courses of insulation between wall ties and other obstructions, with edges butted tightly in both directions. Press units firmly against inside substrates indicated.

1. Supplement adhesive attachment of insulation by securing boards with two-piece wall ties designed for this purpose and specified in Division 04 Section "Unit Masonry."

3.6 INSTALLATION OF GENERAL BUILDING INSULATION

A. Apply insulation units to substrates by method indicated, complying with manufacturer's written instructions. If no specific method is indicated, bond units to substrate with adhesive or use mechanical anchorage to provide permanent placement and support of units.

B. Seal joints between foam-plastic insulation units by applying adhesive, mastic, or sealant to edges of each unit to form a tight seal as units are shoved into place. Fill voids in completed installation with adhesive, mastic, or sealant as recommended by insulation manufacturer.

C. Set vapor-retarder-faced units with vapor retarder in location indicated of construction, unless otherwise indicated.

1. Tape joints and ruptures in vapor retarder, and seal each continuous area of insulation to surrounding construction to ensure airtight installation.

D. Install mineral-fiber insulation in cavities formed by framing members according to the following requirements:

1. Use insulation widths and lengths that fill the cavities formed by framing members. If more than one length is required to fill cavity, provide lengths that will produce a snug fit between ends.
2. Place insulation in cavities formed by framing members to produce a friction fit between edges of insulation and adjoining framing members.
3. Maintain 3-inch (76-mm) clearance of insulation around recessed lighting fixtures.
4. Install eave ventilation troughs between roof framing members in insulated attic spaces at vented eaves.
5. For metal-framed wall cavities where cavity heights exceed 96 inches (2438 mm), support unfaced blankets mechanically and support faced blankets by taping flanges of insulation to flanges of metal studs.
6. For wood-framed construction, install mineral-fiber blankets according to ASTM C 1320 and as follows:

E. Install board insulation on concrete substrates by adhesively attached, spindle-type insulation anchors as follows:

1. Fasten insulation anchors to concrete substrates with insulation anchor adhesive according to anchor manufacturer's written instructions. Space anchors according to insulation manufacturer's written instructions for insulation type, thickness, and application indicated.
2. Apply insulation standoffs to each spindle to create cavity width indicated between concrete substrate and insulation.
3. After adhesive has dried, install board insulation by pressing insulation into position over spindles and securing it tightly in place with insulation-retaining washers, taking care not to compress insulation below indicated thickness.
4. Where insulation will not be covered by other building materials, apply capped washers to tips of spindles.

F. Install board insulation in curtain-wall construction where indicated on Drawings according to curtain-wall manufacturer's written instructions.

1. Retain insulation in place by metal clips and straps or integral pockets within window frames, spaced at intervals recommended in writing by insulation manufacturer to hold insulation securely in place without touching spandrel glass. Maintain cavity width of dimension indicated between insulation and glass.
2. Install insulation where it contacts perimeter fire-containment system to prevent insulation from bowing under pressure from perimeter fire-containment system.

G. Apply self-supported, spray-applied cellulosic insulation according to manufacturer's written instructions. Do not apply insulation until installation of pipes, ducts, conduits, wiring, and electrical outlets in walls is completed and windows, electrical boxes, and other items not indicated to receive insulation are masked. After insulation is applied, make it flush with face of studs by using method recommended by insulation manufacturer.

3.7 INSTALLATION OF RADIANT BARRIERS

A. Install interior radiation control coating system according to ASTM C 1321.

B. Install sheet radiant barriers in locations indicated according to ASTM C 1158.

3.8 INSTALLATION OF VAPOR RETARDERS

A. General: Extend vapor retarder to extremities of areas to be protected from vapor transmission. Secure in place with adhesives or other anchorage system as indicated. Extend vapor retarder to cover miscellaneous voids in insulated substrates, including those filled with loose-fiber insulation.

B. Before installing vapor retarder, apply urethane sealant to flanges of metal framing including runner tracks, metal studs, and framing around door and window openings. Seal overlapping joints in vapor retarders with vapor-retarder tape according to vapor-retarder manufacturer's written instructions. Seal butt joints with vapor-retarder tape. Locate all joints over framing members or other solid substrates.

C. Firmly attach vapor retarders to metal framing and solid substrates with vapor-retarder fasteners as recommended by vapor-retarder manufacturer.

D. Seal joints caused by pipes, conduits, electrical boxes, and similar items penetrating vapor retarders with vapor-retarder tape to create an airtight seal between penetrating objects and vapor retarder.

E. Repair tears or punctures in vapor retarders immediately before concealment by other work. Cover with vapor-retarder tape or another layer of vapor retarder.

3.9 PROTECTION

A. Protect installed insulation and vapor retarders from damage due to harmful weather exposures, physical abuse, and other causes. Provide temporary coverings or enclosures where insulation is subject to abuse and cannot be concealed and protected by permanent construction immediately after installation.

END OF SECTION 072100

SECTION 072110 – INSULATING AIR BARRIER SYSTEM

PART 1 - GENERAL

1.1 SUMMARY

A. This section includes the following:

1. Materials and installation methods for a spray polyurethane foam building insulation and air/vapor barrier system located in the non-accessible part of the wall.
2. SRAB (sheet rubberized-asphalt barrier) self-adhered air/vapor barrier membrane in roof assemblies.
3. Materials and installation to bridge and seal the following air leakage pathways and gaps:

    a. Connections of the walls to the roof air barrier.
    b. Connections of the walls to the foundations.
    c. Seismic and expansion joints.
    d. Openings and penetrations of window frames, store front, curtain wall.
    e. Barrier precast concrete and other envelope systems.
    f. Door frames.
    g. Piping, conduit, duct and similar penetrations
    h. Masonry ties, screws, bolts and similar penetrations.
    i. All other air leakage pathways in the building envelope.

4. Materials to act as flashings and counterflashings.

B. RELATED SECTIONS

1. Section 03300 - Cast-In-Place Concretes for Concrete back-up walls and underslab vapor retarder.
2. Section 04200 - Unit Masonry for backup walls and Masonry veneer cavity walls.
3. Section 07131 - Self-Adhering Sheet Waterproofing: Below grade waterproofing.
4. Section 07160 - Bituminous Dampproofing: Below grade dampproofing.
5. Section 07210 - Building Insulation: Insulation with integral vapor retarder facing.
6. Section 07620 - Sheet Metal Flashing and Trim: Sheet metal flashings.

1.2 PERFORMANCE REQUIREMENTS

A. Provide air/vapor barrier system constructed to perform as a continuous air/vapor barrier system, as building thermal insulation, and as a liquid water drainage plane flashed to discharge to the exterior any incidental condensation or water penetration. System shall accommodate movements of building materials by providing expansion and control joints as required, with accessory air seal materials at such locations, changes in substrate and perimeter conditions.

1.3 SUBMITTALS

A. Provide submittals in accordance with Section 01330.

1. At bid submission, provide evidence to the Architect of licensing and certification under the Air Barrier Association of America's (ABAA's) Quality Assurance Program.
2. Submit shop drawings showing locations and extent of air/vapor barrier and details of all typical conditions, intersections with other envelope systems and materials, membrane

flashings and counter-flashings, and details showing how gaps in the construction will be bridged, how inside and outside corners are negotiated and how miscellaneous penetrations such as conduits, pipes electric boxes and the like are sealed.

3. Submit manufacturer's product data sheets for each type of material, including manufacturer's printed instructions for evaluating, preparing, and treating substrate, temperature and other limitations of installation conditions, technical data, and tested physical and performance properties.
4. Submit manufacturer's installation instructions.
5. Provide evidence of testing by an accredited laboratory confirming material has been tested and conforms to the requirements of ASTM E2178, Standard for Air Barrier Materials.
6. Certification by air/vapor barrier manufacturer that products supplied comply with local regulations controlling use of volatile organic compounds (VOCs).
7. Certification of compatibility by air/vapor barrier manufacturer, listing all materials on the project that it connects to or that come in contact with it.
8. Submit two samples, 12 by 12 inch (300 by 300 mm) minimum size, of each air/vapor barrier material required for Project.
9. Submit test results of air permeability testing of primary air barrier material (ASTM E 2178-01)
10. Submit test results of assembly in accordance with ABAA test protocol.

1.4 QUALITY ASSURANCE

A. Installer Qualifications:

1. The air barrier contractor shall be, during the bidding period as well as for the duration of the installation, officially recognized as a Licensed Contractor by the Air Barrier Association of America (ABAA). The contractor shall carry liability insurance and bonding.
2. Each worker who is installing air barriers must be either a Certified Applicator or an installer who is registered with ABAA
3. Air/vapor barrier installers must be trained and certified by ABAA/NECA (National Energy Conservation Association) and PSDI (Professional Skills Development Institute for energy conservation) in accordance with the training requirements outlined in the ULC S705.2-02 Installation Standard. Installers shall have their photo-identification certification cards in their possession and available on the project site, for inspection upon request.

B. Single-Source Responsibility: Obtain air/vapor barrier materials from a single manufacturer regularly engaged in manufacturing the product.

C. Provide products which comply with all state and local regulations controlling use of volatile organic compounds (VOCs).

D. Preconstruction Meeting: Convene week prior to commencing Work of this section, in accordance with Section - Project Meetings.

E. Field-Constructed Mock-Ups: Prior to installation of air/vapor barrier, apply air/vapor barrier as follows to verify details under shop drawing submittals and to demonstrate tie-ins with adjoining construction, and other termination conditions, as well as qualities of materials and execution:

1. Apply air/vapor barrier in field-constructed mock-ups of assemblies specified in Section 04200 and Section 09253.
2. Apply air/vapor barrier in field-constructed mock-ups of assemblies specified in Section 01452, “Mock-Ups”.

3. Construct typical exterior wall panel, 8 feet long by 8 feet wide, incorporating back-up wall, partial cladding, window and doorframe and sill, insulation, flashing, building corner condition, junction with roof system foundation wall and typical penetrations and gaps; illustrating materials interface and seals. All transition membranes and seals shall be installed per the manufacturer's system requirements.

F. Test mock-up for air and water infiltration to conform with Section 01400 - Quality Control, in accordance with ASTM E 783 and ASTM E1105.

G. Cooperate and coordinate with the Owner's inspection and testing agency. Do not cover any installed air and vapor barrier unless it has been inspected, tested and approved.

H. Protect people and materials from over-spray and contact with chemicals and gases.

1.5 DELIVERY, STORAGE, AND HANDLING

A. Deliver materials to Project site in original packages with seals unbroken, labeled with manufacturer's name, product, date of manufacture, expiration date, and directions for storage.

B. Store materials in their original undamaged packages in a clean, dry, protected location and within temperature range required by air/vapor barrier manufacturer. Protect stored materials from direct sunlight.

C. Avoid spillage. Immediately notify Owner, [Architect] [Consultant] if spillage occurs and start clean up procedures.

D. Clean spills and leave area as it was prior to spill.

E. Separate and recycle waste materials in accordance with Section [01355 - Waste Management and Disposal], and with the Waste Reduction Workplan.

F. Place materials defined as hazardous or toxic waste in designated containers.

G. Ensure emptied containers are sealed and stored safely for disposal away from children.

1.6 PROJECT CONDITIONS

A. Environmental Conditions: Apply air/vapor barrier within range of ambient and substrate temperatures recommended by air/vapor barrier manufacturer. Do not apply air/vapor barrier to a damp or wet substrate, unless the manufacturer specifically permits that for the product.

1. Do not apply air/vapor barrier in snow, rain, fog, or mist.
2. Do not apply air/vapor barrier when the temperature of substrate surfaces and surrounding air temperatures are below those recommended by the manufacturer.
3. The product shall not be installed after the expiry date printed on the label of each container. The product has a shelf life of 6 months from the date of manufacture.

1.7 WARRANTY

A. For sealant and membrane materials provide a 24 month warranty period.

B. Material Warranty: Provide the manufacturer's three year air/vapor barrier material warranty under provisions of Section.

C. System Warranty: Provide the manufacturer's three year system warranty, including the primary air/vapor barrier and installed accessory sealant and membrane materials which fail to achieve air tight and watertight seal, exhibit loss of adhesion or cohesion, or do not cure.

PART 2 - PRODUCTS

2.1 MATERIALS & MANUFACTURERS

A. Sprayed polyurethane foam air barrier wall systems are manufactured on the jobsite by trained, certified contractor manufacturers. The Contractor, Manufacturer must be certified by the Air Barrier Association of America (ABAA) and provide trained certified mechanics with a demonstrated ability to manufacture air barrier system on project of similar size, scope and complexity.

Bob McFadden
Bel Air Foamed Insulation, Inc.
2133 N. Fountain Green Road
Bel Air, MD 21015
(410)838-5900
FAX (410)879-0287

Landon Royals
Royals Insulation
212-A Najoles Road
Millersville, MD 21108
(410) 729-0405
Fax (410) 729-0825

Temple Chappell
Procoat Applicators
PO Box 4366
Annapolis, MD 21403
(410)626-1546
Fax (410)295-6576
spfspec@aol.com

Bonnie Strickler
PUFF Inc.
1851 Gleco Mills Lane
Charlottesville, VA 22903
(434)977-0427
(434)977-0428
suzie@puffinc.com

1. Sprayed polyurethane foam material, when tested, shall meet the requirements of ULC S705.1-01 Standard for Thermal Insulation-Spray Applied Rigid Polyurethane Foam, Medium Density, Material- Specification.
2. A copy of an Evaluation Report (such as the CCMC Evaluation Report) or copies of the test reports from an accredited testing laboratory, for each physical property, indicating that the product meets the requirements of ULC S705.1-01 shall be made available upon request. A copy of either the evaluation report or the test reports shall be on file at the ABAA office.
3. Material containers shall be labeled with the Evaluation Report number of the evaluation agency.
4. Design R value as indicated in test report; minimum R6/inch.
5. Density as indicated in test report: 1.9 pounds per cubic foot.
6. Smoke development as indicated in test report ASTM E84-04; Flame spread index 25, Smoke Developed 400 or less tested at 3" thickness
7. Products that meet the preceding requirements:

    a. BASF Walltite® performance properties are used as the design standard or equal

B. AUXILIARY MATERIALS

1. Furnish auxiliary materials recommended by air/vapor barrier manufacturer for intended use and compatible with the air/vapor barrier.

2. Self-adhering modified asphalt/polyethylene flashing to counterflash metal flashings:

a. Bakor Blueskin® TWF.

3. Primer: Water based liquid primer for concrete, masonry, gypsum sheathing, wood, metal, and painted substrates;

   a. Aquatac® as manufactured by Bakor Inc.

4. Primer: Solvent based, VOC compliant primer for concrete, masonry, gypsum sheathing, wood, metal, and painted substrates;

   a. Blueskin® Primer by Bakor, Inc.

5. Mastic, Adhesives, and Tape: Liquid mastic and adhesives, and adhesive tapes by SRAB air/vapor barrier manufacturer.

6. Stainless-Steel Sheet Flashing: ASTM A167, Type 304, soft annealed, with No. 2D finish; minimum, 0.0156 inch (0.4 mm) thick.

7. Transition Strip: Self-adhering, smooth surfaced SBS modified bitumen membrane, nominal 40 mil thickness, width as required.

   a. Blueskin® SA as manufactured by Bakor Inc

8. Transition Strip Primer:

   a. Blueskin® Primer as manufactured by Bakor Inc.

9. Sheet Membrane Transition Strip Termination Sealant:

   a. Polybitume 570-05 by Bakor Inc.

10. Sheet Membrane Air Barrier Perimeter Seal to Windows, Doors, Curtainwall and Storefront systems: Non-reinforced, cured chloroprene polymer sheet (neoprene) complying with ASTM D2000 Designation 2BC415 to 3BC620, 50 to 65 mils (1.3 to 1.6 mm) thick.

    a. Adhesive: Typical contact-type adhesive used for fully-adhered membranes.
    b. Lap Sealant: Typical urethane or silicone lap and termination sealant used for membrane edges recommended by manufacturer.
    c. Termination bars and fasteners:
       1) Stainless steel, Aluminum bars, and stainless fasteners Galvanized steel.

11. Sheet Membrane Sheet Membrane Air Barrier Perimeter Seal to Windows, Doors, Curtainwall and Storefront systems: Low modulus silicone sheet; provide manufacturer's standard system consisting of precured low-modulus silicone extrusion, in sizes to fit widths indicated, combined with a neutral-curing low modulus silicone sealant for bonding extrusions to substrates.

    1. Pecora Sil-Span.
    2. Dow 1-2-3 or equal.

12. Provide sealants in accordance with Section 07900 - Joint Sealers. Comply with ASTM C920 and ASTM C920 classifications for type, grade, class, and uses

a. Silicone Sealant Type A: natural cure, low modulus, to seal sheet membrane flashing to polyethylene face of sheet rubberized-asphalt barrier and to seal between and to non-bituminous sheet systems.

1) Acceptable materials:
   a) Dow 790
   b) Pecora 864

2) SPF (Sprayed Polyurethane Foam) Sealant: Provide one- or two-component, foamed-in-place, polyurethane foam sealant with the following characteristics:
   a) Density: 1.5 to 2.0 PCF.
   b) Flame Spread (ASTM E162): 25 or less.
   c) Initial R-Value (at 1 inch): Not less than 7. Acceptable materials:
      - Zerodraft Foam Sealant.
      - Zerodraft Insulating Air Sealant
      Zerodraft (Division of Canam Building Envelope Specialists Inc.), 125 Traders Blvd. E., Unit # 4, Mississauga, ON, L4Z 2H3 Tel. 1-877-272-2626

3. Substrate Cleaner: Non-corrosive type recommended by sealant manufacturer compatible with adjacent materials.

C. EQUIPMENT

1. The equipment used to spray the polyurethane foam material shall be in accordance with ULC S705.2-02 and the equipment manufacturer's recommendations for specific type of application.
2. Equipment settings are to be recorded on the Daily Work Record as required by the ULC S705.2-02 Installation standard.
3. Each proportioner unit to supply only one spray gun.

PART 3 - EXECUTION

3.1 EXAMINATION

A. Examine substrates, areas, and conditions under which air/vapor barrier systems will be applied, with Installer present, for compliance with requirements. Verify that surfaces and conditions are suitable prior to commencing work of this section. Do not proceed with installation until unsatisfactory conditions have been corrected.

1. Do not proceed with installation until after minimum concrete curing period recommended by air/vapor barrier manufacturer.

2. Ensure that:

a. surfaces are sound, dry, even, and free of oil, grease, dirt, excess mortar or other contaminants
b. concrete surfaces are cured and dry, smooth without large voids, spalled areas or sharp protrusions.
c. masonry joints are flush and completely filled with mortar, and all excess mortar sitting on masonry ties has been removed.

3. Verify substrate is visibly dry and free of moisture. Test for capillary moisture by plastic sheet method according to ASTM D4263.
4. Notify Architect in writing of anticipated problems using air/vapor barrier over substrate.

3.2 SURFACE PREPARATION

A. Clean, prepare, and treat substrate according to manufacturer's written instructions. Provide clean, dust-free, and dry substrate for air/vapor barrier application.

B. Prime masonry, concrete substrates with conditioning primer when installing modified asphalt membrane transition membranes.

C. Prime glass-fiber surfaced gypsum sheathing an adequate number of coats to achieve required bond to transition membranes, with adequate drying time between coats.

D. Prime wood, metal, and painted substrates with primer recommended by membrane manufacturer.

E. Prepare, treat, and seal vertical and horizontal surfaces at terminations and penetrations through air/vapor barrier and at protrusions according to air/vapor barrier manufacturer's written instructions and approved tested system in accordance with ABAA air barrier testing protocol.

1. Verify that surfaces and conditions are suitable to accept work as outlined in this section.
2. Prior to commencement of work report in writing to the architect [consultant] any defects in surfaces or conditions that may adversely affect the performance of products installed under this section.
3. Commencement of work outlined in this section shall be deemed as acceptance of existing work and conditions.
4. Examine joints before sealing to ensure configurations, surfaces and widths are suitable for spray polyurethane foam. Report in writing all defects stating the locations of joints deemed unacceptable for the application of the spray polyurethane foam.

3.3 PREPARATION

A. Protection:

1. Mask and cover adjacent areas to protect from over spray.
2. Ensure any required foam stop or back up material are in place to prevent over spray and achieve complete seal.
3. Seal off existing ventilation equipment. Install temporary ducting and fans to ensure exhaust fumes. Provide for make-up air.
4. Erect barriers, isolate area and post warning signs to advise non-protected personnel to avoid the spray area.

B. Surface Preparation

1. Surfaces to receive foam insulation shall be clean, dry and properly fastened to ensure adhesion of the polyurethane foam to the substrate.
2. Ensure that all work by other trades that may penetrate through the air barrier system is in place and complete.
3. Ensure that surface preparation and any primers required conform to the manufacturer’s instructions.
4. Prepare surfaces by brushing, scrubbing. Scraping, or grinding to remove loose mortar, dust, oil, grease, oxidation, mill scale and other contaminants which will affect adhesion

and integrity of the spray polyurethane foam. Wipe down metal surfaces to remove release agents or other non-compatible coatings, using clean sponges or rags soaked in a solvent compatible with the spray polyurethane foam. Ensure surfaces are dry before proceeding.

5. Install transition membranes to all applicable surfaces and ensure proper adhesion of the transition membranes to the substrate, capable of having spray polyurethane foam insulation.

6. Install counter-flashings"
   a. Metal: Mechanically fasten metal counter-flashings with screws at 8" (200 mm) o.c.
   b. Membrane: Cut into and uncover only 3" of siliconized release paper along one edge of the counter-flashing membrane. Adhere membrane flashing to the pre-primed substrate a minimum of 3" and roll firmly in place.

7. Ensure veneer anchors are in place.

C. APPLICATION:

1. Spray-application of polyurethane foam shall be installed in accordance with ULC S705.2-02 and the manufacturer's instructions.
2. Apply only when surfaces and environmental conditions are within limits prescribed by the material manufacturer and the ULC S705.2 Installation standard.
3. Apply in consecutive passes as recommended by manufacturer to thickness as indicated on drawings. Passes shall be not less than ½ inch and not greater than 2 inches.
4. Do not install spray polyurethane foam within 3 inches of heat emitting devices such as light fixtures and chimneys.
5. Finished surface of foam insulation to be free of voids and embedded foreign objects.
6. Remove masking materials and over spray from adjacent areas immediately after foam surface has hardened. Ensure cleaning methods do not damage work performed by other sections.
7. Trim, as required, any excess thickness that would interfere with the application of cladding/covering system by other trades.
8. Clean and restore surfaces soiled or damaged by work of the section. Consult with section of work soiled before cleaning to ensure methods used will not damage the work.
9. Do not permit adjacent work to be damaged by work of this section. Damage to work of this section caused by other sections shall be repaired by this section at the expense of the subcontractor causing the damage.
10. Complete connections to other components or repair any gaps, holes or other damage using material which conforms to ULC S710.1 Polyurethane Sealant Foam – One Component – Material or ULC S711.1 Polyurethane Sealant Foam – Two Components – Material and shall be installed in accordance with ULC S710.2 Polyurethane Sealant Foam – One component – Installation or ULC S711.2 Polyurethane Sealant Foam – Two Component – Installation, whichever is appropriate.

D. FIELD QUALITY CONTROL

1. Site Tests
   a. The Licensed Installer shall conduct daily visual inspection, adhesion/cohesion testing and density measurements as outlined by the ULC S705.2-02 Installation standard.
   b. The Licensed Installer shall complete the Daily Work Record and record all information required including the results of the testing. The Daily Work Record shall be kept on site for routine inspection. Copies of the Daily Work Record shall be forwarded to the owner or owner's representative upon request. Copies of the

Daily Work Record or monthly summaries shall be sent to the ABAA office on a monthly basis as required by the Quality Assurance Program.

c. Transition membranes shall be pull tested in accordance with the ABAA Quality Assurance Program requirements before installing the spray polyurethane air barrier material.

d. The costs incurred for daily testing and inspection by the Licensed Installer and the completion of the Daily Work Record shall be borne by the Licensed Contractor.

2. Inspection

a. Arrange for site inspections by ABAA. The cost of inspections shall be included in the bid provided by the Licensed Contractor.

b. The ABAA site-inspections shall verify conformance with the manufacturer's instructions, the standard ULC S705.2-02 Installation standard, the ABAA Quality Assurance Program, and this section of the project specification.

c. Inspections and testing shall be carried out at 5%, 50% and 95% of completion. A written inspection report shall be forwarded to the architect, the owner's representative, the Contractor, and the ABAA-licensed installer within 3 working days of the inspection and test being performed. In the case of any deficiencies, the ABAA-licensed inspector may verbally advise the licensed installer at the time of the inspection.

d. If the inspection reveals any defects, the Licensed Contractor shall immediately rectify all such defects at his cost.

E. TOLERANCES

1. Maximum variation from indicated thickness: minus (-) ¼ inch; plus (+) ½ inch.

F. PROTECTION

1. Protect the spray polyurethane foam from ultraviolet radiation when installed on the exterior of a building.
2. Cover the spray polyurethane foam with a thermal barrier when installed on the interior of the building.

END OF SECTION 072110

SECTION 074113 – STANDING SEAM ROOF PANELS

PART 1 - GENERAL

1.1 RELATED DOCUMENTS

A. Drawings and general provisions of the Contract, including General and Supplementary Conditions and Division 1 Specification Sections, apply to this Section.

1.2 SUMMARY

A. This Section includes the following:

1. Formed and field-assembled standing-seam metal roof panels and appropriate underlayment material.

B. Related Sections include the following:

1. Division 5 Section “Steel Roof Decking” for steel roof deck supporting metal roof panels.
2. Division 7 Section “Metal Wall Panels” for factory-formed metal soffit panels.
3. Division 7 Section “Flashing and Sheet Metal” for fascia, copings, flashings and other sheet metal work not part of metal roof panel assemblies.
4. Division 7 Section “Joint Sealants” for field-applied sealants not otherwise specified in this Section.

1.3 DEFINITIONS

A. Metal Roof Panel Assembly: Metal roof panels, attachment system components, miscellaneous metal framing, thermal insulation, and accessories necessary for a complete weathertight roofing system.

B. Solar Flux: Direct and diffuse radiation from the sun received at ground level over the solar spectrum, expressed in watts per square meter.

C. Solar Reflectance: Fraction of solar flux reflected by a surface, expressed as a percent or within the range of 0.00 and 1.00.

1.4 PERFORMANCE REQUIREMENTS

A. Performance standards in these documents are intended to provide the Owner with a standard of quality. Roofing systems supplied by the manufacturer chosen by the bidder must meet/exceed all of the stated materials and roof system performance characteristics, referenced code approval (FM, UL, and IBC) wind uplift and fire resistance criteria, on site quality control, and warranty and post-installation maintenance agreement requirements. The Architect and Owner shall provide sole and final determination as to the acceptance and approval of the Bidders roofing system.

B. General: Provide metal roof panel assemblies that comply with performance requirements specified as determined by testing manufacturers’ standard assemblies similar to those indicated for this Project, by a qualified testing and inspecting agency.

C. Wind-Uplift Resistance: Provide metal roof panel assemblies that comply with UL 580 for wind-uplift resistance Class 90.

D. Air and Water Infiltration: Provide test results of ASTM test E1646 Standard test method for water penetration of exterior metal roof and siding systems by uniform static air pressure difference and ASTM test E1680 Standard test method or air leakage through exterior metal roof and siding systems.

E. Provide test results showing specified panel assembly passing ASTM E2140-01 Standard Test Method for Water Penetration of Metal Roof Panel System by Static Water Pressure Head. (Hydrostatic Roof System Test)

F. Structural Performance: Provide metal roof panel assemblies capable of withstanding the effects of gravity loads and the following loads and stresses within limits and under conditions indicated, based on testing according to procedures listed in ASTM E 1592:

1. Wind Loads: Determine loads based on the following minimum design wind pressures:
   a. Uniform pressure as indicated on Drawings.
   b. Wind Speed: 120 mph.

2. Snow Loads: 30 lbf / sq. ft.
   Live Loads: 30 lbf / sq. ft.

3. Deflection Limits: Engineer metal roof panel assemblies to withstand design loads with calculated vertical deflections no greater than 1/180 of the span.

G. Thermal Movements: Provide metal roof panel assemblies that allow for thermal movements resulting from the following maximum change (+ or - 100 degrees F) in ambient and surface temperatures by preventing buckling, opening of joints, overstressing of components, failure of joint sealants, failure of connections, and other detrimental effects. Base engineering calculation on surface temperatures of materials due to both solar heat gain and nighttime-sky heat loss.

H. Metal panel assembly shall be listed with Underwriters' Laboratories as Class A roof systems with regards to their resistance to external flame sources.

I. Metal panel shall be listed with Underwriters' Laboratories as Class 4 Hail resistant panels.

1.5 SUBMITTALS

A. Product Data: Include construction details, material descriptions, dimensions of individual components and profiles, and finishes for each type of metal roof panel and accessory.

B. Shop Drawings: Show fabrication and installation layouts of metal roof panels; details of edge conditions, joints, panel profiles, corners, anchorages, trim, flashings, closures, accessories, and special details and should be specific to this project. All drawings to be stamped and sealed by an engineer employed by the metal roof manufacturer and shall be registered in the state of Delaware. Distinguish between factory and field-assembled work.

1. Accessories: Include details of the following items:

   a. Flashing and trim.
   b. Gutters.
   c. Downspouts.
   d. Roof curbs.
   e. Pipe penetration flashings
   f. Snow guards.

2. For installed products indicated to comply with design loads, include structural analysis data signed and sealed by the qualified professional engineer responsible for their preparation.

C. Samples for Initial Selection: For each type of metal roof panel indicated with factory-applied color finishes.

1. Include similar Samples of trim and accessories involving color selection.

D. Samples for Verification: For each type of exposed finish required, prepared on Samples of size indicated below.

1. Metal Roof Panels: 12 inches long by actual panel width. Include fasteners, clips, closures, and other metal roof panel accessories.
2. Trim and Closures: 12 inches long. Include fasteners and other exposed accessories.
3. Vapor Retarders: 6-inch- square Samples.
4. Accessories: 12-inch long Samples for each type of accessory.

E. Material Certificates: For thermal insulation signed by manufacturers.

F. Qualification Data: Installer, Professional Engineer.

G. Field quality-control inspection reports.

H. Product Test Reports: Based on evaluation of comprehensive tests performed by a qualified testing agency, for the following:

1. Metal Roof Panels: Include reports for air infiltration, water penetration, thermal performance, fire-test-response characteristics, solar reflectance and structural performance.
2. Insulation and Vapor Retarders: Include reports for thermal resistance, fire-test-response characteristics, water-vapor transmission, and water absorption.

I. Maintenance Data: For metal roof panels to include in maintenance manuals.

J. Warranties: Special warranties specified in this Section.

1.6 QUALITY ASSURANCE

A. Installer Qualifications: An employer of workers trained and approved by manufacturer, having completed a documented, comprehensive manufacturer's installation training program, and having a minimum of three (3) years experience installing the manufacturer's product.

1. Installer's responsibilities include installation of metal roof panel assemblies and providing professional engineering services by metal roof panel manufacturer.
2. Engineering Responsibility: Preparation of data for metal roof panels, including Shop Drawings, based on testing and engineering analysis, by an independent engineer registered in the State of Delaware, of manufacturer's standard units in assemblies similar to those indicated for this Project.

B. Source Limitations: Obtain metal roof panels through one source from a single manufacturer.

C. Product Options: Drawings indicate size, profiles, and dimensional requirements of metal roof panels and are based on the specific system indicated. Refer to Division 1 Section "Product Requirements."

1. Do not modify intended aesthetic effects, as judged solely by Architect, except with Architect's approval. If modifications are proposed, submit comprehensive explanatory data to Architect for review.

D. Fire-Resistance Ratings: Where indicated, provide metal roof panels identical to those of assemblies tested for fire resistance per ASTM E 119 by a testing and inspecting agency acceptable to authorities having jurisdiction.

1. Fire-Resistance Ratings: Indicated by design designations from UL's "Fire Resistance Directory" or from the listings of another testing and inspecting agency.

2. Metal roof panels shall be identified with appropriate markings of applicable testing and inspecting agency.

E. Preliminary Roofing Conference: Before starting roof construction, conduct conference at Project site. Comply with requirements for preinstallation conferences in Division 1 Section "Project Management and Coordination." Review methods and procedures related to roof joist construction and metal roof panels including, but not limited to, the following:

1. Meet with Owner, Architect, Owner's insurer if applicable, testing and inspecting agency representative, metal roof panel Installer, metal roof panel manufacturer's representative, joist Installer, and installers whose work interfaces with or affects metal roof panels including installers of roof accessories and roof-mounted equipment.
2. Review and finalize construction schedule and verify availability of materials, Installer's personnel, equipment, and facilities needed to make progress and avoid delays.
3. Review methods and procedures related to metal roof panel installation, including manufacturer's written instructions.
4. Examine joist conditions for compliance with requirements, including flatness and attachment to structural members.
5. Review structural loading limitations of joist during and after roofing.
6. Review flashings, special roof details, roof drainage, roof penetrations, equipment curbs, and condition of other construction that will affect metal roof panels.
7. Review governing regulations and requirements for insurance, certificates, and testing and inspecting if applicable.
8. Review temporary protection requirements for metal roof panels during and after installation.
9. Review roof observation and repair procedures after metal roof panel installation.

F. Preinstallation Conference: Conduct conference at Project site to comply with requirements in Division 1 Section "Project Management and Coordination." Review methods and procedures related to metal roof panel assemblies including, but not limited to, the following:

1. Meet with Owner, Architect, Owner's insurer if applicable, testing and inspecting agency representative, metal roof panel Installer, metal roof panel manufacturer's representative, deck Installer, and installers whose work interfaces with or affects metal roof panels including installers of roof accessories and roof-mounted equipment.
2. Review and finalize construction schedule and verify availability of materials, Installer's personnel, equipment, and facilities needed to make progress and avoid delays.
3. Review methods and procedures related to metal roof panel installation, including manufacturer's written instructions.
4. Examine deck substrate, purlins and rafter conditions for compliance with requirements, including flatness and attachment to structural members.
5. Review structural loading limitations of deck and joist during and after roofing.
6. Review flashings, special roof details, roof drainage, roof penetrations, equipment curbs, and condition of other construction that will affect metal roof panels.
7. Review governing regulations and requirements for insurance, certificates, and testing and inspecting if applicable.
8. Review temporary protection requirements for metal roof panel assembly during and after installation.
9. Review roof observation and repair procedures after metal roof panel installation.
10. Document proceedings, including corrective measures and actions required, and furnish copy of record to each participant.

1.7 DELIVERY, STORAGE, AND HANDLING

A. Deliver components, sheets, metal roof panels, and other manufactured items so as not to be damaged or deformed. Package metal roof panels for protection during transportation and handling.

B. Unload, store, and erect metal roof panels in a manner to prevent bending, warping, twisting, and surface damage.

C. Stack metal roof panels on platforms or pallets, covered with suitable weathertight and ventilated covering. Store metal roof panels to ensure dryness. Do not store metal roof panels in contact with other materials that might cause staining, denting, or other surface damage.

D. Protect strippable protective covering on metal roof panels from exposure to sunlight and high humidity, except to extent necessary for period of metal roof panel installation.

1.8 PROJECT CONDITIONS

A. Weather Limitations: Proceed with installation only when existing and forecasted weather conditions permit assembly of metal roof panels to be performed according to manufacturers' written instructions and warranty requirements.

B. Field Measurements: Verify locations of roof framing and roof opening dimensions by field measurements before metal roof panel fabrication and indicate measurements on Shop Approval Drawings.

1. Established Dimensions: Where field measurements cannot be made without delaying the Work, either establish framing and opening dimensions and proceed with fabricating metal roof panels without field measurements, or allow for field-trimming of panels. Coordinate roof construction to ensure that actual building dimensions, locations of structural members, and openings correspond to established dimensions.

1.9 COORDINATION

A. Coordinate installation of roof curbs, equipment supports, and roof penetrations, which are specified in Division 7 Section "Roof Accessories." Provide roof system manufacturer's curbs.

B. Roof installer must supply and install roof accessories that are approved, supplied, and warranted by the roofing manufacturer, and according to manufacturer's recommended details.

C. Coordinate metal panel roof assemblies with rain drainage work, flashing, trim, and construction of decks, joist parapets, walls, and other adjoining work to provide a leakproof, secure, and noncorrosive installation.

1.10 WARRANTY

A. Standard Warranty: Manufacturer's standard form in which manufacturer agrees to repair or replace components of metal roof panel assemblies that fail in materials or workmanship within specified warranty period.

1. Failures include, but are not limited to, the following:

a. Structural failures, including rupturing, cracking, or puncturing.
b. Deterioration of metals, metal finishes, and other materials beyond normal weathering.

2. Warranty Period: One year from date of final Completion.

B. Special Warranty on Panel Finishes: Manufacturer's standard form in which manufacturer agrees to repair finish or replace metal roof panels that show evidence of deterioration of factory-applied finishes within specified warranty period.

1. Fluoropolymer Finish: Deterioration includes, but is not limited to, the following:

a. Color fading more than 5 Hunter units when tested according to ASTM D 2244.
b. Chalking in excess of a No. 8 rating when tested according to ASTM D 4214.
c. Cracking, checking, peeling, or failure of paint to adhere to bare metal.

2. 20-year period is for fluoropolymer finish and is maximum included with manufacturers' published data; 10-year period is usually available for siliconized polyester.
3. Finish Warranty Period: 20 years from date of Final Completion.

C. Special Weathertightness Warranty for Standing-Seam Metal Roof Panels: Manufacturer's standard form in which manufacturer agrees to repair or replace standing-seam metal roof panel assemblies that fail to remain weathertight, including leaks, within specified warranty period. This warranty will include the roof panels, trims, transitions, pipe penetration flashings, curbs and gutters.

1. 1. Warranty Period: 20 years from date of Substantial Completion.

D. Special Weathertightness Warranty for Standing-Seam Metal Roof Panels: Furnish a single manufacturer, twenty (20) year full system warranty, including five (5) year contractor/installer warranty, covering all new components installed above the roof deck, including insulation, fasteners, metal roof, all metal roof trims and transitions, manufacturer supplied curbs, pipe penetration flashings, and all metal wall panels installed with the metal roof.

1. Warranty Period: 20 years from date of Substantial Completion.

2. Warranty Limit of Liability: Installed cost of metal roof system including labor and materials.

a. Warranty must include paint adhesion for the full term of the warranty
b. Warranty must include detailed description of warranty extension options.
c. Manufacturer will at it's own expense, repair or cause to be repaired, any damage found in the above outlined new roof system, as a result of failure of any of the system components after the warranty is provided to the Owner.
d. Manufacturer will provide local on site Technical Field Inspectors (non-sales), to visit the project a minimum of two (2) times per week to monitor the installation. Manufacturer will provide field reports to the Owners representative after each visit.
e. Manufacturer shall provide the Owners representative with a written resume stating qualifications of this inspector.

PART 2 - PRODUCTS

2.1 MANUFACTURERS

A. Basis-of-Design: Subject to compliance with requirements, provide products by The Garland Company, Inc. or comparable product by one of the following:

1. Tremco, Inc.
2. Bemo USA, Inc.

B. Prequalified Substitutions: Bidders proposing an equivalent substitution shall submit all information required and in accordance with the standards set forth in this specification section to the Architect no later than ten (10) days prior to the bid date. If acceptance of the proposed substitute is given, it will be by addenda.

1. Roof Manufacturer Compliance Checklist: Bidders proposing an equivalent substitution shall submit a fully completed copy of the checklist found at the end of this specification section.
2. Bidders proposing an equivalent substitution shall submit all technical (ASTM D-5147) verified testing information that meets or exceeds the minimum standards set forth in the specification. The responsive bidder must submit in triplicate all testing of materials submitted, notarized and

tested by an accredited third party testing facility. Manufacturer technical data sheets will not be accepted as a basis for comparison.

C. The Architect shall be the sole judge as to whether or not an item submitted is an equivalent. Should the contractor choose to submit a request for acceptance of a substitution, he shall assume all risk involved, monetary or otherwise should the Architect find it unacceptable.

D. In other Part 2 articles where titles below introduce lists, the following requirements apply for product selection:

1. Available Products: Subject to compliance with requirements, products that may be incorporated into the Work include, but are not limited to, the products specified.
2. Products: Subject to compliance with requirements, provide one of the products specified.
3. Available Manufacturers: Subject to compliance with requirements, manufacturers offering products that may be incorporated into the Work include, but are not limited to, the manufacturers specified.
4. Manufacturers: Subject to compliance with requirements, provide products by the manufacturers specified.

F. Available Product: Subject to compliance with requirements, manufacturers that may be incorporated into the Work include, but are not limited to, the following:

1. Panels

   a. R-Mer Span Roof System by The Garland Company, Inc.3800 East 91st Street Cleveland, Ohio.
   b. Metal Panel Tremlock VP Roof System by Tremco Incorporated, 3734 Green Road, Beachwood, Ohio.
   c. Equivalent product by Bemo USA, Inc.

2. Underlayment Sheets

   a. W.R. Grace & Co. –Conn. 62 Whittemore Avenue, Cambridge, Massachusetts 02140.
   b. Carlisle Coatings & Waterproofing, Inc., 900 Hensley Lane, Wylie, Texas 75098.

3. Roof Insulation Boards

   a. Firestone Building Products Company, 525 Congressional Boulevard, Carmel, Indiana 46032.
   b. Carlisle SynTec Systems, Inc., P.O. Box 7000, Carlisle, Pennsylvania 17013.

2.2 PANEL MATERIALS

A. Metallic-Coated Steel Sheet Prepainted with Coil Coating: Steel sheet metallic coated by the hot-dip process and prepainted by the coil-coating process to comply with ASTM A 755/A 755M.

1. Zinc-Coated (Galvanized) Steel Sheet: ASTM A 653/A 653M, G90 coating designation; structural quality.

2. Surface: Smooth finish.

3. Exposed Finishes: Apply the following coil coating, as specified or indicated on Drawings.

   a. High-Performance Organic Finish: Prepare, pretreat, and apply coating to exposed metal surfaces to comply with coating and resin manufacturers' written instructions.

(1) Fluoropolymer Two-Coat System: Manufacturer's standard two-coat, thermocured system consisting of specially formulated inhibitive primer and fluoropolymer color topcoat containing with a minimum total dry film thickness of 0.9 mil; not less than 70 percent polyvinylidene fluoride resin.

4. Concealed Finish: Apply pretreatment and manufacturer's standard white or light-colored acrylic or polyester backer finish, consisting of prime coat and wash coat with a minimum total dry film thickness of 0.5 mil.

B. Panel Sealants:

1. Sealant Tape: Pressure-sensitive, 99 percent solids, gray butyl rubber compound sealant tape with release-paper backing. Provide permanently elastic, non-sag, nontoxic, non-staining tape 1 inch wide and 1/16 inch thick minimum containing nylon spacer beads.

2. Joint Sealant: ASTM C 920; elastomeric polyurethane sealant; of type, grade, class, and use classifications required to seal joints in metal roof panels and remain weathertight; and as recommended in writing by metal roof panel manufacturer.

3. Butyl-Rubber-Based, Solvent-Release Sealant containing nylon spacer beads.

2.3 UNDERLAYMENT MATERIALS

A. Self-Adhering, SBS Base Sheet: ASTM D1970-00, .080 in. thick minimum, consisting of specially blended SBS modified asphalt above the fiberglass mat, with an SIS modified self adhesive bitumen blend below the fiberglass reinforcement. The bottom is provided with release-paper backing; cold applied.

1. Products:

a. W. R. Grace Ultra Heat Resistant Roofing Underlayment Sheet.
b. Carlisle CCW WIP 403HR Heat Resistant Roofing Underlayment Sheet.

B. Sheathing Paper: Red-rosin type, minimum 3 lb/100 sq. ft. if necessary.

2.4 MISCELLANEOUS MATERIALS

A. Fasteners: Self-tapping screws, bolts, nuts, self-locking rivets and bolts, end-welded studs, and other suitable fasteners designed to withstand design loads. Provide exposed fasteners with heads matching color of metal roof panels by means of factory-applied coating.

1. Fasteners for Roof Panels: Self-drilling or self-tapping, zinc-plated, hex-head carbon-steel screws, with a stainless-steel cap or zinc-aluminum-alloy head and EPDM sealing washer.
2. Fasteners for Flashing and Trim: Blind fasteners or self-drilling screws with hex washer head.
3. Blind Fasteners: High-strength aluminum or stainless-steel rivets.

2.5 STANDING-SEAM METAL ROOF PANELS

A. Vertical-Rib, Seamed-Joint, Continuous–Run Standing-Seam Metal Roof Panels: Factory-formed and field-formed with vertical ribs at panel edges and flat pan between ribs; designed for sequential installation by mechanically attaching panels to supports using concealed clips located under one side of panels and engaging opposite edge of adjacent panels, and mechanically seaming panels together. Metal roof panel and trims are to utilize hydrostatic details at all trims, transitions, and penetrations.

1. Basis-of-Design Product: Garland R-MER Span
2. Material: G-90 Zinc-coated galvanized steel sheet, .0276 (24 guage) thick.

a. Exterior Finish: “Kynar 500/Hylar 5000”.
b. Color: Custom.

3. Clips: One-piece or two-piece Low Moveable Clip to accommodate thermal movement within the sheet. *Fixed clips are not permitted for use.*

a. Material: .0336 thick, zinc-coated (galvanized) steel sheet.
b. Clip spacing to meet requirements of IBC.

4. Joint Type: Single folded.
5. Panel Coverage: 16 inches.
6. Panel Height 2.0 inches.
7. Uplift Rating: UL 90.
8. No end laps are permitted.

B. Field-roll formed panels must be roll formed on factory owned and operated equipment, the roll former must have a minimum of 12 stands, and all performance and warranty requirements defined elsewhere in this specification must be met. Portable roll formers operated by the roofing contractor will not be permitted.

2.6 ACCESSORIES

A. Roof Panel Accessories: Provide components required for a complete metal roof panel assembly including trim, copings, fasciae, corner units, ridge closures, clips, flashings, sealants, gaskets, fillers, closure strips, and similar items. Match material and finish of metal roof panels, unless otherwise indicated.

1. Closures: Provide closures at eaves and ridges, fabricated of same metal as metal roof panels.
2. Clips: Minimum 0.0336 thick, one-piece or two-piece galvanized steel panel clips designed to withstand negative-load requirements.
3. Backing Plates: Provide metal backing plates at panel end splices, pre-fabricated from manufacturer with stainless steel studs.

B. Flashing and Trim: Formed from 24 gauge thick, zinc-coated (galvanized) steel sheet, prepainted with coil coating. Provide flashing and trim as required to seal against weather and to provide finished appearance. Locations include, but are not limited to, eaves, rakes, corners, bases, framed openings, ridges, fasciae, and fillers. Finish flashing and trim with same finish system as adjacent metal roof panels. All details will be installed utilizing hydrostatic joinery.

C. Exterior Metal Gutters: Formed from 24 gauge thick, zinc-coated (galvanized) steel sheet repainted with coil coating. Match profile of gable trim, complete with end pieces, outlet tubes, and other special pieces as required. Fabricate in maximum length possible to minimize joints. Furnish gutter supports per manufacturers’ standard, installed without through-fastening of panel. Provide wire ball strainers at outlets. Finish gutters to match metal roof panels or roof fascia and rake trim.

D. Downspouts: Formed from 26 gauge thick, zinc-coated (galvanized) steel sheet prepainted with coil coating; in 10-foot long sections, complete with formed elbows and offsets. Finish downspouts to match metal roof panels as per noted on drawings.

E. Roof Curbs: Fabricated from aluminum sheet per manufacturer’s standard, with integral internal flange for attachment minimizing through fastening. Roof curbs to be supplied by the metal roof manufacturer and to be included with weathertightness warranty.

1. Insulate roof curb with 1-inch- thick, rigid insulation.

F. Snow Guards: Prefabricated, noncorrosive units designed to be installed without penetrating metal roof panels, and complete with predrilled holes, clamps, or hooks for anchoring.

1. Seam-Mounted, Bar-Type Snow Guards: Aluminum rods or bars held in place by stainless-steel clamps attached to vertical ribs of standing-seam metal roof panels.

    a. Aluminum Finish: Kynar 500/ hylar 5000 color to match metal roof panels
    b. Stainless-Steel Finish: Mill.
    c. Products:

        1) LMCurbs; S-5! SnoFence.
        2) Snow Management Systems, a division of Contek, Inc.; Vermont Snowguard.
        3) Roofing Manufacturer's system that meets all performance requirements.

G. Pipe Flashing: Premolded, EPDM pipe collar with flexible aluminum ring bonded to base and stainless steel pipe clamp to secure collar to pipe. Pipe penetration flashings to be supplied by the metal roof manufacturer and to be included with weathertightness warranty.

2.7 THERMAL INSULATION

A. Rigid Board Insulation: Insulation board shall be rigid polyisocyanurate foam plastic with a asphalt coated felt facer meeting the requirements of ASTM C 1289, Type II, Class 1.

B. Long Term Thermal Resistance of Rigid Board Insulation shall be not less than value of 30.0. Long Term R-values shall be determined using a 15 year time-weighted average in accordance with CAN/ULC S770.

C. Rigid Board Insulation shall have a compressive strength not less than 20 psi as per the requirements of ASTM D1621.

D. Rigid Board Insulation shall be a standard product with the insulation manufacturer, factory marked or identified with insulation manufacturer's name or trademark and R-value. Identification shall be on individual pieces or individual packages. Insulation, including facings, shall have a flame spread rating and a smoke developed rating in accordance with ASTM E 84.

E. Rigid Board Insulation Fastener Assemblies shall be a standard FM Global approved product supplied by the insulation manufacturer. Each fastener assembly shall consist of a self-drilling self-tapping fluorocarbon coated steel screw and 3 inch diameter Galvalume coated steel plate washer.

2.8 FABRICATION

A. General: Fabricate and finish metal roof panels and accessories at the factory to greatest extent possible, by manufacturer's standard procedures and processes, as necessary to fulfill indicated performance requirements demonstrated by laboratory testing. Comply with indicated profiles and with dimensional and structural requirements.

B. Provide panel profile, including major ribs and intermediate stiffening ribs, if any, for full length of panel.

C. Where indicated, fabricate metal roof panel joints with factory-installed captive gaskets or separator strips that provide a tight seal and prevent metal-to-metal contact, in a manner that will minimize noise from movements within panel assembly.

D. Sheet Metal Accessories: Fabricate flashing and trim to comply with manufacturers' standard.

1. Form exposed sheet metal accessories that are without excessive oil canning, buckling, and tool marks and that are true to line and levels indicated, with exposed edges folded back to form hems.
2. Conceal fasteners and expansion provisions where possible.
3. Fabricate cleats and attachment devices from same material as accessory being anchored or from compatible, noncorrosive metal recommended by metal roof panel manufacturer.

a. Size: As recommended by SMACNA's "Architectural Sheet Metal Manual" or metal roof panel manufacturer for application but not less than thickness of metal being secured.

2.9 FINISHES, GENERAL

A. Comply with NAAMM's "Metal Finishes Manual for Architectural and Metal Products" for recommendations for applying and designating finishes.

B. Protect mechanical and painted finishes on exposed surfaces from damage by applying a strippable, temporary protective covering before shipping.

C. Appearance of Finished Work: Variations in appearance of abutting or adjacent pieces are acceptable if they are within one-half of the range of approved Samples. Noticeable variations in the same piece are not acceptable. Variations in appearance of other components are acceptable if they are within the range of approved Samples and are assembled or installed to minimize contrast.

PART 3 - EXECUTION

3.1 EXAMINATION

A. Examine substrates, areas, and conditions, with Installer present, for compliance with requirements for installation tolerances, metal roof panel supports, and other conditions affecting performance of work.

1. Examine primary and secondary roof framing to verify that rafters, purlins, angles, channels, and other structural panel support members and anchorages have been installed within alignment tolerances required by metal roof panel manufacturer.
2. Examine solid roof sheathing to verify that sheathing joints are supported by framing or blocking and that installation is within flatness tolerances required by metal roof panel manufacturer.
3. For the record, prepare written report, endorsed by Installer, listing conditions detrimental to performance of work.

B. Examine roughing-in for components and systems penetrating metal roof panels to verify actual locations of penetrations relative to seam locations of metal roof panels before metal roof panel installation.

C. Proceed with installation only after unsatisfactory conditions have been corrected.

3.2 PREPARATION

A. Clean substrates of substances harmful to insulation, including removing projections capable of interfering with insulation attachment.

B. Install flashings and other sheet metal to comply with requirements specified in Division 7 Section "Sheet Metal Flashing and Trim."

C. Install fascia and copings to comply with metal roof manufacturers standard details.

1. Miscellaneous Framing: Install roof decking, subpurlins, eave angles, furring, and other miscellaneous roof panel support members and anchorage according to metal roof panel manufacturer's written recommendations.

3.3 INSULATION BOARD INSTALLATION

A. General: Provide and install insulation boards over roof decking covered with vapor barrier sheets and secure to the steel roof decking using FM Approved fluorocarbon coated steel screws and Galvalume plate washers.

1. Install full-sized boards and stagger end joints of insulation boards 12 inches. Only half boards or larger shall be used at perimeters and corners. Small filler boards shall be used in the field of the roof prior to roof boards placement at perimeters and corners.

2. Butt roof boards tight to adjacent boards, leaving not more than ¼ inch gaping at junctures. Roof boards shall be cut to fit tightly around all penetrations and at all nailers and curbs.

3. Secure each insulation board to the roof deck using six (6) fastener assemblies. Place each of four of the fastener assemblies 6 inches in from the edge of insulation board.

4. Minimize construction traffic on the installed roof boards. Roof boards damaged by traffic shall be removed and replaced. Cost for removal and replacement shall be at the sole cost of the contractor.

5. Roof boards shall not be exposed to weather resulting in moisture infiltration. Contractor shall not apply more roof boards in one day than can be completely covered with the required roof membrane on that day. Furring channels must be wire-tied to supports in most fire-resistance-rated assemblies. Verify requirements of assemblies and revise below to suit Project.

3.4 UNDERLAYMENT INSTALLATION.

A. Self-Adhering Sheet Underlayment: Install self-adhering sheet underlayment, wrinkle free, on each roof insulation board under metal roof panels. Apply primer if required by manufacturer. Comply with temperature restrictions of underlayment manufacturer for installation; use primer rather than nails for installing underlayment at low temperatures. Apply as per manufacturers recommended instructions, in shingle fashion to shed water, with end laps of not less than 6 inches staggered 24 inches between courses. Overlap side edges not less than 3-1/2 inches. Extend underlayment into gutter trough. Roll laps with roller. Cover underlayment within 14 days or follow underlayment manufacturer's guidelines.

1. Extend underlayment sheets over rake edges and 4 inches downward over the top of the facade.
2. Extend underlayment sheets over roof to wall intersections for a 4 inch vertical distance.
3. Extend underlayment sheets around dormers, chimneys, skylights, and other penetrating elements for a distance of 4 inches vertically.

B. Sheeting Paper: Install red-rosin sheet over self-adhering sheet before installing metal roof panels.

3.5 METAL ROOF PANEL INSTALLATION, GENERAL

A. General: Provide metal roof panels of full length from eave to ridge, unless otherwise indicated or restricted by shipping limitations. Anchor metal roof panels and other components of the Work securely in place, with provisions for thermal and structural movement. Utilize hydrostatic joinery throughout. No joinery to be dependent on exterior sealants to ensure weathertightness.

1. Field cutting of metal roof panels by torch or abrasive cut-saw is not permitted.
2. Install panels perpendicular to purlins.
3. Rigidly fasten eave end of metal roof panels and allow ridge end free movement due to thermal expansion and contraction.
4. Provide pre-fabbed and pre-drilled metal closures at peaks, rake edges, rake walls and each side of ridge and hip caps.
5. Flash and seal metal roof panels with weather closures at eaves, rakes, and at perimeter of all openings. Fasten with self-tapping screws.
6. Locate and space fastenings in uniform vertical and horizontal alignment per shop drawings.
7. Install ridge and hip caps as metal roof panel work proceeds.
8. Locate panel splices over, but not attached to, structural supports. Stagger panel splices and end laps to avoid a four-panel lap splice condition.
9. Lap metal flashing over metal roof panels to allow moisture to run over and off the material.

B. Fasteners:

1. Steel Roof Panels: Use manufacturer's standard corrosion resistant steel fasteners for surfaces exposed to the exterior and galvanized steel fasteners for surfaces exposed to the interior.

C. Joint Sealers: Install sealants where indicated and where required for weatherproof performance of metal roof panel assemblies. Provide sealants recommended by metal roof panel manufacturer.

1. Seal metal roof panel end laps with manufacturer's recommended sealant, full width of panel. Seal side joints where recommended by metal roof panel manufacturer.
2. Prepare joints and apply sealants to comply with requirements in Division 7 Section "Joint Sealants."

3.6 FIELD-ASSEMBLED METAL ROOF PANEL INSTALLATION

A. Standing-Seam Metal Roof Panels: Fasten metal roof panels to supports with concealed clips placed on bearing plates at each standing-seam joint at location, spacing, and with fasteners recommended by manufacturer.

1. Clips: Install clips to supports with self-tapping fasteners.
2. Bearing Plates: Install bearing plates at locations indicated in manufacturer's written installation instructions.
3. Snap Joint: Nest standing seams and fasten together by interlocking and completely engaging factory-applied sealant.
4. Seamed Joint: Form standing seams with manufacturer-approved motorized seamer tool so clip, metal roof panel, and factory-applied sealant are completely engaged.

3.7 ACCESSORY INSTALLATION

A. General: Install accessories with positive anchorage to building and weathertight mounting and provide for thermal expansion. Coordinate installation with flashings and other components.

1. Install components required for a complete metal roof panel assembly including trim, copings, ridge closures, seam covers, flashings, sealants, gaskets, fillers, closure strips, and similar items.

B. Flashing and Trim: Comply with performance requirements, manufacturer's written installation instructions. Provide concealed fasteners where possible, and set units true to line and level as indicated. Install work with laps, joints, and seams that will be permanently watertight and weather resistant.

1. Install exposed flashing and trim that is without excessive oil canning, buckling, and tool marks and that is true to line and levels indicated, with exposed edges folded back to form hems. Install sheet metal flashing and trim to fit substrates and to result in waterproof and weather-resistant performance.
2. Expansion Provisions: Provide for thermal expansion of exposed flashing and trim.

C. Exterior Metal Gutters: Join sections with riveted, lapped and sealed joints. Attach gutters to eave with gutter hangers spaced not more than 4 feet o.c. using manufacturer's standard fasteners. Provide end closures and seal watertight with sealant. Provide for thermal expansion.

D. Downspouts: Join sections with 1-1/2-inch telescoping joints. Provide fasteners designed to hold downspouts securely 1 inch away from walls; locate fasteners at top and bottom and at approximately 60 inches o.c. in between.

1. Provide elbows at base of downspouts to direct water away from building.
2. Tie downspouts to underground drainage system indicated.

E. Roof Curbs: Install curbs supplied by metal roof manufacturer, at locations indicated on Drawings. Curbs to be of internal flange design.

F. Bar-Type Snow Guards: Attach bar supports to vertical ribs of standing-seam metal roof panels with clamps or set screws. Do not use fasteners that will penetrate metal roof panels.

1. Provide one snow guard at each roof panel. Space as recommended by manufacturer.

G. Pipe Flashing: Form flashing around pipe penetration and metal roof panels. Fasten and seal to metal roof panels with aluminum blind-type clamping fastener.

3.8 ERECTION TOLERANCES

A. Installation Tolerances: Shim and align metal roof panel units within installed tolerance of ¼ inch in 20 feet on slope and location lines as indicated and within 1/8-inch offset of adjoining faces and of alignment of matching profiles.

3.9 FIELD QUALITY CONTROL

A. Manufacturer's Field Service: Engage an authorized manufacturer's representative to inspect two(2) work days during each week of the installation of the metal roofing system and perform a pre-final and final inspect of the completed metal roof panel installation, including accessories. Report results in writing.

B. Remove and replace applications of metal roof panels where inspections indicate that they do not comply with specified requirements.

C. Additional inspections, at Contractor's expense, will be performed to determine compliance of replaced or additional work with specified requirements.

3.10 CLEANING AND PROTECTION

A. Remove temporary protective coverings and strippable films, if any, as metal roof panels are installed, unless otherwise indicated in manufacturer's written installation instructions. On completion of metal roof panel installation, clean finished surfaces as recommended by metal roof panel manufacturer. Maintain in a clean condition during construction.

B. Replace metal roof panels that have been damaged or have deteriorated beyond successful repair by finish touchup or similar minor repair procedures.

END OF SECTION 074113

SECTION 074213 - METAL WALL PANELS

PART 1 – GENERAL

1.1 RELATED DOCUMENTS

A. Drawings and general provisions of the Contract, including General and Supplementary Conditions and Division 1 Specification Sections, apply to this Section.

1.2 SUMMARY

A. This Section includes the following:

1. Metal wall panels with concealed fasteners at walls.
2. Soffit panels as indicated.

B. Related Sections include the following:

1. Division 5 Section "Structural Steel" for structural-steel framing.
2. Division 5 Section "Cold-Formed Metal Framing" for metal studs, bracing, anchorage, and framing accessories.
3. Division 6 Section "Rough Carpentry" for wood blocking.
4. Division 7 Section "Flashing and Sheet Metal" for metal flashing and trim not part of this Work.
5. Division 7 Section "Joint Sealants" for field-applied sealants.
6. Division 7 Section “Metal Wall Shingles” for wall shingles.
7. Division 8 Section "Louvers and Vents" for integral louvers.

1.3 PERFORMANCE REQUIREMENTS

A. General: Provide manufactured wall panel assemblies complying with performance requirements indicated and capable of withstanding structural movement, thermally induced movement, and exposure to weather without failure or infiltration of water into the building interior.

B. Air Infiltration: Provide manufactured wall panel assemblies with permanent resistance to air leakage through assembly of not more than 0.09 cfm/sq. ft. (0.45 L/s/sq. m) of fixed wall area when tested according to ASTM E 283 at a static-air-pressure difference of 4.0 lbf/sq. ft. (192 Pa).

C. Water Penetration: Provide manufactured wall panel assemblies with no water penetration as defined in the test method when tested according to ASTM E 331 at a minimum differential pressure of 20 percent of inward acting, wind-load design pressure of not less than 6.24 lb/sq. ft. (300 Pa) and not more than 12.0 lb/sq. ft. (575 Pa).

D. Structural Performance: Provide manufactured wall panel assemblies capable of withstanding design wind loads indicated under in-service conditions with deflection no greater than the following, based on testing manufacturer's standard units according to ASTM E 330 by a qualified independent testing and inspecting agency.

1. Maximum Deflection: 1/180 of the span.

1.4 SUBMITTALS

A. Product Data: Include manufacturer's product specifications, standard details, certified product test results, and general recommendations, as applicable to materials and finishes for each component and for total panel assemblies.

B. Shop Drawings: Show layouts of panels, details of corner conditions, joints, panel profiles, supports, anchorages, trim, flashings, closures, and special details. Distinguish between factory- and field-assembled work.

C. Samples for Initial Selection: Manufacturer's color charts or chips showing the full range of colors, textures, and patterns available for wall panels with factory-applied finishes.

D. Samples for Verification: Provide sample panels 12 inches (300 mm) long by actual panel width, in the profile, style, color, and texture indicated. Include clips, caps, battens, fasteners, closures, and other exposed panel accessories.

E. Qualification Data: For firms and persons specified in the "Quality Assurance" Article to demonstrate their capabilities and experience. Include lists of completed projects with project names and addresses, names and addresses of architects and owners, and other information specified.

F. Product Test Reports: Indicate compliance of manufactured wall panel assemblies and materials with performance and other requirements based on comprehensive testing of current products.

1.5 QUALITY ASSURANCE

A. Installer Qualifications: Engage an experienced installer who has completed metal wall panel projects similar in material, design, and extent to that indicated for this Project and with a record of successful in-service performance.

B. Fire-Test-Response Characteristics: Where fire-resistance-rated wall panel assemblies are indicated, provide materials and construction identical to those of assemblies tested for fire resistance per ASTM E 119 by an independent testing and inspecting agency acceptable to authorities having jurisdiction.

1. Fire-Resistance Ratings: As indicated by design designations in UL's "Fire Resistance Directory" or in the listing of another testing and inspecting agency acceptable to authorities having jurisdiction.

C. Mockups: Before installing wall panels, construct mockups for each form of construction and finish required to verify selections made under Sample submittals and to demonstrate aesthetic effects and qualities of materials and execution. Build mockups to comply with the following requirements, using exposed and concealed materials indicated for the completed Work.

1. Locate mockups in the location and of the size indicated or, if not indicated, as directed by Architect.
2. Notify Architect 7 days in advance of the dates and times when mockups will be constructed.
3. Demonstrate the proposed range of aesthetic effects and workmanship.
4. Obtain Architect's approval of mockups before proceeding with construction of wall panels.
5. Maintain mockups during construction in an undisturbed condition as a standard for judging the completed Work.

a. Approved mockups in an undisturbed condition at the time of Substantial Completion may become part of the completed Work.

1.6 DELIVERY, STORAGE, AND HANDLING

A. Deliver panels and other components so they will not be damaged or deformed. Package panels for protection against damage during transportation or handling.

B. Handling: Exercise care in unloading, storing, and erecting wall panels to prevent bending, warping, twisting, and surface damage.

C. Stack materials on platforms or pallets, covered with tarpaulins or other suitable weathertight and ventilated covering. Store panels to ensure dryness. Do not store panels in contact with other materials that might cause staining, denting, or other surface damage.

1.7 PROJECT CONDITIONS

A. Field Measurements: Verify location of structural members and openings in substrates by field measurements before fabrication and indicate measurements on Shop Drawings. Coordinate fabrication schedule with construction progress to avoid delaying the Work.

1.8 WARRANTY

A. General Warranty: Special warranties specified in this Article shall not deprive the Owner of other rights the Owner may have under other provisions of the Contract Documents and shall be in addition to, and run concurrent with, other warranties made by the Contractor under requirements of the Contract Documents.

B. Special Finish Warranty: Submit a written warranty, signed by manufacturer, covering failure of the factory-applied exterior finish on metal wall panels within the specified warranty period and agreeing to repair finish or replace wall panels that show evidence of finish deterioration. Deterioration of finish includes, but is not limited to, color fade, chalking, cracking, peeling, and loss of film integrity.

C. Finish Warranty Period: 20 years from date of Substantial Completion.

PART 2 - PRODUCTS

2.1 MANUFACTURERS

A. Products:

1. Metal Wall Panel – 1: **(MWP-1)**
   a. Basis of Design: Centria CS-200, 22 Gauge metal

   b. Comparable Products: In order for the products listed below to be considered equal to the basis of design product, they must meet the performance and detail requirements contained within the project documents and manufacturer's details / product data of the basis of design product listed above.
      1. Morin XC-12

2. Metal Wall Panel – 2: **(MWP-2)**
   a. Basis of Design: Centria IW-10A, 20 Gauge metal

   b. Comparable Products: In order for the products listed below to be considered equal to the basis of design product, they must meet the performance and detail requirements contained within the project documents and manufacturer's details / product data of the basis of design product listed above.
      1. Morin F-12-S

3. Insulated Metal Wall Panel: **(IMP-1)**
   a. Basis of Design: Dimension Series – 2" Horizontal Flat, Face sheet 20 Gauge, Liner 22 Gauge

   b. Comparable Products: In order for the products listed below to be considered equal to the basis of design product, they must meet the performance and detail requirements contained within the project documents and manufacturer's details / product data of the basis of design product listed above.
      1. Kingspan – Designwall 2000 – 2" Vertical Flat

2.2 METALS AND FINISHES

A. Exposed Finish for Exterior Panels: Comply with NAAMM's "Metal Finishes Manual for Architectural and Metal Products" for recommendations relative to applying and designating finishes. Prepare, pretreat, and apply coating to exposed metal surfaces to comply with coating and resin manufacturer's written instructions.

1. Metallic Fluoropolymer: AAMA 620. Three-coat fluoropolymer finish with suspended metallic flakes containing not less than 70 percent PVDF resin by weight in both color coat and clear topcoat. Prepare, pretreat, and apply coating to exposed metal surfaces to comply with coating and resin manufacturers' written instructions.

a. Color : Custom color(s) – Final color selections to be made by Architect
   1) MWP-1 : Up to two different colors
   2) MWP-2 : Nine different colors (refer to drawings for locations)
   3) IMP-1 : Up to two different colors

b. Gloss: 20-35 typical.

2.3 WALL PANEL ASSEMBLIES

A. Exterior Wall Panels: Fabricate panel face sheets to the profile or configuration indicated; and of the material, finish, and thickness indicated. Design joints between panels to form weathertight seals. Panel configuration equivalent to products noted:

1. Provide shop assembled / mitered corner trim panels.
2. Soffit Panels: .032” aluminum, alloy 3015-H14, flush panel, 11” o.c. with manufacturer’s J channel trim.

2.4 MISCELLANEOUS MATERIALS

A. Fasteners: Self-tapping screws, bolts, nuts, self-locking rivets and bolts, end-welded studs, and other suitable fasteners designed to withstand design loads.

1. Use stainless-steel fasteners for exterior applications and galvanized steel fasteners for interior applications.

B. Accessories: Unless otherwise specified, provide components required for a complete wall panel assembly including trim, copings, fasciae, soffits, mullions, sills, corner units, clips, seam covers, flashings, louvers, sealants, gaskets, fillers, closure strips, and similar items. Match materials and finishes of panels.

1. Closure Strips: Closed-cell, self-extinguishing, expanded, cellular, rubber or cross-linked, polyolefin-foam flexible closure strips. Cut or premold to match configuration of panels. Provide closure strips where indicated or necessary to ensure weathertight construction.
2. Sealing Tape: Pressure-sensitive, 100 percent solids, polyisobutylene compound sealing tape with release paper backing. Provide permanently elastic, nonsag, nontoxic, nonstaining tape.
3. Joint Sealant: One-part elastomeric polyurethane, polysulfide, or silicone-rubber sealant as recommended by panel manufacturer.
4. Outside Corners: Shop assembled and mitered.

C. Bituminous Coating: Cold-applied asphalt mastic, SSPC-Paint 12, compounded for 15-mil (0.4-mm) dry film thickness per coat, unless otherwise indicated. Provide inert-type noncorrosive compound free of asbestos fibers, sulfur components, and other deleterious impurities.

2.5 FABRICATION

A. General: Fabricate and finish panels and accessories at the factory to greatest extent possible, by manufacturer's standard procedures and processes, as necessary to fulfill indicated performance requirements demonstrated by laboratory testing. Comply with indicated profiles and with dimensional and structural requirements.

B. Sound Control: Where sound-absorption requirement is indicated, fabricate interior liner panels with 1/8-inch- (3-mm-) diameter holes uniformly spaced approximately 1000 holes per square foot (10 750 holes per square meter). Cover insulation with polyethylene film and provide inserts of wire mesh to form acoustical spacer grid.

C. Apply bituminous coating or other permanent separation materials on concealed panel surfaces where panels would otherwise be in direct contact with substrate materials that are noncompatible or could result in corrosion or deterioration of either materials or finishes.

D. Fabricate panel joints with captive gaskets or separator strips that provide a tight seal and prevent metal-to-metal contact, in a manner that will minimize noise from movements within panel assembly.

2.6 SECONDARY FRAMING

A. Panel Supports and Anchorage: Provide girts, furring channels, angles, plates, bracing, and other secondary framing members.

1. Girts: C- or Z-shaped sections fabricated from 0.0598-inch- (1.5-mm-) thick, shop-painted, roll-formed steel.
2. Flange and Sag Bracing: 1-5/8-by-1-5/8-inch (41-by-41-mm) angles, fabricated from 0.0598-inch- (1.5-mm-) thick, shop-painted, roll-formed steel.
3. Base or Sill Angles: Fabricate from 0.079-inch- (2.0-mm-) thick, cold-formed, galvanized steel sections.

4. Secondary structural members, except columns and beams, shall be manufacturer's standard sections fabricated from 0.079-inch- (2.0-mm-) thick, cold-formed galvanized steel.

PART 3 - EXECUTION

3.1 EXAMINATION

A. Examine substrates and conditions, with Installer present, for compliance with requirements indicated for conditions affecting performance of metal panel walls.

1. Panel Supports and Anchorage: Examine wall framing to verify that girts, angles, and other secondary structural panel support members and anchorage have been installed to meet requirements of panel manufacturer.
2. Do not proceed with wall panel installation until unsatisfactory conditions have been corrected.

3.2 PREPARATION

A. Coordinate metal wall panels with rain drainage work; flashing; trim; and construction of soffits, roofing, parapets, walls, and other adjoining work to provide a leakproof, secure, and noncorrosive installation.

B. Promptly remove protective film, if any, from exposed surfaces of metal panels. Strip with care to avoid damage to finish.

C. Secondary Structural Supports: Install girts, angles, and other secondary structural panel support members and anchorage according to the Light Gage Structural Institute's "Guide Specifications," Section 07410, "Manufactured Roof and Wall Panels."

3.3 PANEL INSTALLATION

A. General: Comply with panel manufacturer's written instructions and recommendations for installation, as applicable to project conditions and supporting substrates. Anchor panels and other components of the Work securely in place, with provisions for thermal and structural movement.

1. Field cutting exterior panels by torch is not permitted.
2. Install panels with concealed fasteners.
3. Install panels with exposed exterior and interior fasteners, prefinished to match panel finishes. Provide waterproof washers at all exposed fasteners.
4. Locate and space exposed fasteners in true vertical and horizontal alignment. Use proper tools to obtain controlled, uniform compression for positive seal without rupture of neoprene washer.
5. Install felt paper on substrate as required by manufacturer.

B. Accessories: Install components required for a complete wall panel assembly including trim, copings, fasciae, mullions, sills, corner units, clips, seam covers, flashings, louvers, sealants, gaskets, fillers, closure strips, and similar items.

C. Joint Sealers: Install gaskets, joint fillers, and sealants where indicated and where required for weatherproof performance of wall panel assemblies. Provide types of gaskets, fillers, and sealants indicated or, if not otherwise indicated, types recommended by panel manufacturer.

1. Install weatherseal to prevent air and moisture penetration. Flash and seal panels at ends and intersections with other materials with rubber, neoprene, or other closures to exclude weather.
2. Seal panel end laps with a bead of tape or sealant, full width of panel. Seal side joints where recommended by panel manufacturer.
3. Prepare joints and apply sealants to comply with requirements of Division 7 Section "Joint Sealants."

D. Wall Panels: Apply elastomeric sealant continuously between metal base channel (sill angle) and concrete, and elsewhere as necessary for waterproofing. Handle and apply sealant and back-up according to sealant manufacturer's written instructions.

1. Align bottom of wall panels and fasten with blind rivets, bolts, or self-tapping screws. Fasten flashings and trim around openings and similar elements with self-tapping screws.
2. Install screw fasteners with power tools having controlled torque adjusted to compress neoprene washer tightly without damage to washer, screw threads, or panels. Install screws in predrilled holes.
3. Provide weatherproof escutcheons for pipe and conduit penetrating exterior walls.

E. Separate dissimilar metals by painting each metal surface in area of contact with a bituminous coating or by other permanent separation as recommended by manufacturers of dissimilar metals.

F. Coat back side of metal panels with bituminous coating where it will contact wood, ferrous metal, or cementitious construction.

G. Installation Tolerances: Shim and align panel units within installed tolerance of 1/4 inch in 20 feet (6 mm in 6 m) on level, plumb, and location lines as indicated and within 1/8-inch (3-mm) offset of adjoining faces and of alignment of matching profiles.

3.4 CLEANING AND PROTECTING

A. Damaged Units: Replace panels and other components of the Work that have been damaged or have deteriorated beyond successful repair by finish touchup or similar minor repair procedures.

B. Cleaning: Remove temporary protective coverings and strippable films, if any, as soon as each panel is installed. On completion of panel installation, clean finished surfaces as recommended by panel manufacturer and maintain in a clean condition during construction.

END OF SECTION 074213

SECTION 075323 - ETHYLENE-PROPYLENE-DIENE-MONOMER (EPDM) ROOFING

PART 1 - GENERAL

1.1 RELATED DOCUMENTS

A. Drawings and general provisions of the Contract, including General and Supplementary Conditions and Division 01 Specification Sections, apply to this Section.

1.2 SUMMARY

A. Section Includes:

1. Adhered ethylene-propylene-diene-monomer (EPDM) roofing system.
2. Vapor retarder.
3. Roof insulation.

B. Section includes the installation of insulation strips in ribs of roof deck. Insulation strips are furnished under Section 053100 "Steel Decking."

C. Related Requirements:

1. Section 053100 "Steel Decking" for furnishing acoustical deck rib insulation.
2. Section 061000 "Rough Carpentry" for wood nailers, curbs, and blocking.
3. Section 072100 "Thermal Insulation" for insulation beneath the roof deck.
4. Section 076200 "Sheet Metal Flashing and Trim" for metal roof flashings and counterflashings.
5. Section 079200 "Joint Sealants" for joint sealants, joint fillers, and joint preparation.

1.3 DEFINITIONS

A. Roofing Terminology: Definitions in ASTM D 1079 and glossary of NRCA's "The NRCA Roofing and Waterproofing Manual" apply to work of this Section.

1.4 ACTION SUBMITTALS

A. Product Data: For each type of product.

B. Shop Drawings: For roofing system. Include plans, elevations, sections, details, and attachments to other work, including:

1. Base flashings and membrane terminations.
2. Tapered insulation, including slopes.
3. Roof plan showing orientation of steel roof deck and orientation of roofing and fastening spacings and patterns for mechanically fastened roofing.
4. Insulation fastening patterns for corner, perimeter, and field-of-roof locations.

C. Samples for Verification: For the following products:

1. Sheet roofing, of color required.

2. Walkway pads or rolls, of color required.

1.5 INFORMATIONAL SUBMITTALS

A. Qualification Data: For Installer and manufacturer.

B. Manufacturer Certificates: Signed by roofing manufacturer certifying that roofing system complies with requirements specified in "Performance Requirements" Article.

1. Submit evidence of complying with performance requirements.

C. Product Test Reports: For components of roofing system, tests performed by manufacturer and witnessed by a qualified testing agency.

D. Research/Evaluation Reports: For components of roofing system, from ICC-ES.

E. Field quality-control reports.

F. Sample Warranties: For manufacturer's special warranties.

1.6 CLOSEOUT SUBMITTALS

A. Maintenance Data: For roofing system to include in maintenance manuals.

1.7 QUALITY ASSURANCE

A. Installer Qualifications: A qualified firm that is approved, authorized, or licensed by roofing system manufacturer to install manufacturer's product and that is eligible to receive manufacturer's special warranty.

1.8 DELIVERY, STORAGE, AND HANDLING

A. Deliver roofing materials to Project site in original containers with seals unbroken and labeled with manufacturer's name, product brand name and type, date of manufacture, approval or listing agency markings, and directions for storing and mixing with other components.

B. Store liquid materials in their original undamaged containers in a clean, dry, protected location and within the temperature range required by roofing system manufacturer. Protect stored liquid material from direct sunlight.

1. Discard and legally dispose of liquid material that cannot be applied within its stated shelf life.

C. Protect roof insulation materials from physical damage and from deterioration by sunlight, moisture, soiling, and other sources. Store in a dry location. Comply with insulation manufacturer's written instructions for handling, storing, and protecting during installation.

D. Handle and store roofing materials, and place equipment in a manner to avoid permanent deflection of deck.

1.9 FIELD CONDITIONS

A. Weather Limitations: Proceed with installation only when existing and forecasted weather conditions permit roofing system to be installed according to manufacturer's written instructions and warranty requirements.

1.10 WARRANTY

A. Special Warranty: Manufacturer agrees to repair or replace components of roofing system that fail in materials or workmanship within specified warranty period.

1. Special warranty includes membrane roofing, base flashings, roof insulation, fasteners, cover boards, substrate board, roofing accessories, and other components of roofing system.
2. Warranty Period: 20 years from date of Substantial Completion.

B. Special Project Warranty: Submit roofing Installer's warranty, on warranty form at end of this Section, signed by Installer, covering Work of this Section, including all components of roofing system such as membrane roofing, base flashing, roof insulation, fasteners, cover boards, substrate boards, vapor retarders, roof pavers, and walkway products, for the following warranty period:

1. Warranty Period: Two years from date of Substantial Completion.

PART 2 - PRODUCTS

2.1 MANUFACTURERS

A. Source Limitations: Obtain components including roof insulation fasteners for roofing system from same manufacturer as membrane roofing or manufacturer approved by membrane roofing manufacturer.

2.2 PERFORMANCE REQUIREMENTS

A. General Performance: Installed roofing and base flashings shall withstand specified uplift pressures, thermally induced movement, and exposure to weather without failure due to defective manufacture, fabrication, installation, or other defects in construction. Roofing and base flashings shall remain watertight.

1. Accelerated Weathering: Roofing system shall withstand 2000 hours of exposure when tested according to ASTM G 152, ASTM G 154, or ASTM G 155.
2. Impact Resistance: Roofing system shall resist impact damage when tested according to ASTM D 3746 or ASTM D 4272.

B. Material Compatibility: Roofing materials shall be compatible with one another and adjacent materials under conditions of service and application required, as demonstrated by roofing manufacturer based on testing and field experience.

C. Energy Star Listing: Roofing system shall be listed on the DOE's ENERGY STAR "Roof Products Qualified Product List" for low-slope roof products.

2.3 EPDM ROOFING

A. EPDM: ASTM D 4637, Type I, nonreinforced, uniform, flexible EPDM sheet.

1. Manufacturers: Subject to compliance with requirements, provide products by one of the following:

   a. Basis of Design Manufacturer: Carlisle SynTec Incorporated.
   b. Firestone Building Products.
   c. Johns Manville.
   d. Versico Incorporated.

2. Thickness: 60 mils (1.5 mm), nominal.
3. Exposed Face Color: White on black.

2.4 AUXILIARY ROOFING MATERIALS

A. General: Auxiliary materials recommended by roofing system manufacturer for intended use and compatible with roofing.

1. Liquid-type auxiliary materials shall comply with VOC limits of authorities having jurisdiction.

B. Sheet Flashing: 60-mil- (1.5-mm-) thick EPDM, partially cured or cured, according to application.

C. Protection Sheet: Epichlorohydrin or neoprene nonreinforced flexible sheet, 55- to 60-mil- (1.4- to 1.5-mm-) thick, recommended by EPDM manufacturer for resistance to hydrocarbons, non-aromatic solvents, grease, and oil.

D. Bonding Adhesive: Manufacturer's standard, water based.

E. Seaming Material: Manufacturer's standard, synthetic-rubber polymer primer and 3-inch- (75-mm-) wide minimum, butyl splice tape with release film.

F. Lap Sealant: Manufacturer's standard, single-component sealant, colored to match membrane roofing.

G. Water Cutoff Mastic: Manufacturer's standard butyl mastic sealant.

H. Metal Termination Bars: Manufacturer's standard, predrilled stainless-steel or aluminum bars, approximately 1 by 1/8 inch (25 by 3 mm) thick; with anchors.

I. Metal Battens: Manufacturer's standard, aluminum-zinc-alloy-coated or zinc-coated steel sheet, approximately 1 inch wide by 0.05 inch thick (25 mm wide by 1.3 mm thick), prepunched.

J. Fasteners: Factory-coated steel fasteners and metal or plastic plates complying with corrosion-resistance provisions in FM Global 4470, designed for fastening membrane to substrate, and acceptable to roofing system manufacturer.

K. Miscellaneous Accessories: Provide pourable sealers, preformed cone and vent sheet flashings, molded pipe boot flashings, preformed inside and outside corner sheet flashings, reinforced EPDM securement strips, T-joint covers, in-seam sealants, termination reglets, cover strips, and other accessories.

1. Provide white flashing accessories for white EPDM membrane roofing.

2.5 ROOF INSULATION

A. General: Preformed roof insulation boards manufactured or approved by EPDM roofing manufacturer, selected from manufacturer's standard sizes suitable for application, of thicknesses indicated.

B. Polyisocyanurate Board Insulation: ASTM C 1289, Type II, Class 1, Grade 2, felt or glass-fiber mat facer on both major surfaces.

1. Manufacturers: Subject to compliance with requirements, provide products by one of the following:
   a. Carlisle SynTec Incorporated.
   b. Firestone Building Products.
   c. Hunter Panels.
   d. Johns Manville.

C. Tapered Insulation: Provide factory-tapered insulation boards fabricated to slope of 1/4 inch per 12 inches (1:48) unless otherwise indicated.

D. Provide preformed saddles, crickets, tapered edge strips, and other insulation shapes where indicated for sloping to drain. Fabricate to slopes indicated.

2.6 INSULATION ACCESSORIES

A. General: Roof insulation accessories recommended by insulation manufacturer for intended use and compatibility with roofing.

B. Fasteners: Factory-coated steel fasteners and metal or plastic plates complying with corrosion-resistance provisions in FM Global 4470, designed for fastening roof insulation and cover boards to substrate, and acceptable to roofing system manufacturer.

C. Insulation Adhesive: Insulation manufacturer's recommended adhesive formulated to attach roof insulation to substrate or to another insulation layer as follows:

1. Modified asphaltic, asbestos-free, cold-applied adhesive.
2. Bead-applied, low-rise, one-component or multicomponent urethane adhesive.
3. Full-spread spray-applied, low-rise, two-component urethane adhesive.

D. Cover Board: ASTM C 1177/C 1177M, glass-mat, water-resistant gypsum substrate, 1/2 inch (13 mm) thick.

1. Products: Subject to compliance with requirements, provide one of the following:

   a. Georgia-Pacific Corporation; Dens Deck Prime.
   b. USG Corporation; Securock Glass Mat Roof Board.

2.7 WALKWAYS

A. Flexible Walkways: Factory-formed, nonporous, heavy-duty, solid-rubber, slip-resisting, surface-textured walkway pads, approximately 3/16 inch (5 mm) thick and acceptable to roofing system manufacturer.

PART 3 - EXECUTION

3.1 EXAMINATION

A. Examine substrates, areas, and conditions, with Installer present, for compliance with requirements and other conditions affecting performance of the Work:

1. Verify that roof openings and penetrations are in place, curbs are set and braced, and roof-drain bodies are securely clamped in place.
2. Verify that wood blocking, curbs, and nailers are securely anchored to roof deck at penetrations and terminations and that nailers match thicknesses of insulation.
3. Verify that surface plane flatness and fastening of steel roof deck complies with requirements in Section 053100 "Steel Decking."

B. Proceed with installation only after unsatisfactory conditions have been corrected.

3.2 PREPARATION

A. Clean substrate of dust, debris, moisture, and other substances detrimental to roofing installation according to roofing system manufacturer's written instructions. Remove sharp projections.

B. Prevent materials from entering and clogging roof drains and conductors and from spilling or migrating onto surfaces of other construction. Remove roof-drain plugs when no work is taking place or when rain is forecast.

C. Install insulation strips according to acoustical roof deck manufacturer's written instructions.

3.3 ROOFING INSTALLATION, GENERAL

A. Install roofing system according to roofing system manufacturer's written instructions.

B. Complete terminations and base flashings and provide temporary seals to prevent water from entering completed sections of roofing system at the end of the workday or when rain is forecast. Remove and discard temporary seals before beginning work on adjoining roofing.

3.4 INSULATION INSTALLATION

A. Coordinate installing roofing system components so insulation is not exposed to precipitation or left exposed at the end of the workday.

B. Comply with roofing system and insulation manufacturer's written instructions for installing roof insulation.

C. Install tapered insulation under area of roofing to conform to slopes indicated.

D. Install insulation under area of roofing to achieve required thickness. Where overall insulation thickness is 2.7 inches (68 mm) or greater, install two or more layers with joints of each succeeding layer staggered from joints of previous layer a minimum of 6 inches (150 mm) in each direction.

1. Where installing composite and noncomposite insulation in two or more layers, install noncomposite board insulation for bottom layer and intermediate layers, if applicable, and install composite board insulation for top layer.

E. Trim surface of insulation where necessary at roof drains so completed surface is flush and does not restrict flow of water.

F. Install insulation with long joints of insulation in a continuous straight line with end joints staggered between rows, abutting edges and ends between boards. Fill gaps exceeding 1/4 inch (6 mm) with insulation.

1. Cut and fit insulation within 1/4 inch (6 mm) of nailers, projections, and penetrations.

G. Mechanically Fastened and Adhered Insulation: Install first layer of insulation to deck using mechanical fasteners specifically designed and sized for fastening specified board-type roof insulation to deck type.
1. Fasten first layer of insulation to resist uplift pressure at corners, perimeter, and field of roof.
2. Set each subsequent layer of insulation in a solid mopping of hot roofing asphalt, applied within plus or minus 25 deg F (14 deg C) of equiviscous temperature.
3. Set each subsequent layer of insulation in ribbons of bead-applied insulation adhesive, firmly pressing and maintaining insulation in place.
4. Set each subsequent layer of insulation in a uniform coverage of full-spread insulation adhesive, firmly pressing and maintaining insulation in place.

H. Install cover boards over insulation with long joints in continuous straight lines with end joints staggered between rows. Offset joints of insulation below a minimum of 6 inches (150 mm) in each direction. Loosely butt cover boards together and fasten to roof deck.
1. Fasten cover boards to resist uplift pressure at corners, perimeter, and field of roof.

3.5 ADHERED MEMBRANE ROOFING INSTALLATION

A. Adhere roofing over area to receive roofing according to membrane roofing system manufacturer's written instructions. Unroll membrane roofing and allow to relax before installing.

B. Start installation of roofing in presence of roofing system manufacturer's technical personnel.

C. Accurately align roofing, and maintain uniform side and end laps of minimum dimensions required by manufacturer. Stagger end laps.

D. Bonding Adhesive: Apply to substrate and underside of roofing at rate required by manufacturer, and allow to partially dry before installing roofing. Do not apply to splice area of roofing.

E. In addition to adhering, mechanically fasten roofing securely at terminations, penetrations, and perimeters.

F. Apply roofing with side laps shingled with slope of roof deck where possible.

G. Tape Seam Installation: Clean and prime both faces of splice areas, apply splice tape, and firmly roll side and end laps of overlapping roofing according to manufacturer's written instructions to ensure a watertight seam installation. Apply lap sealant and seal exposed edges of roofing terminations.

H. Repair tears, voids, and lapped seams in roofing that do not comply with requirements.

I. Spread sealant or mastic bed over deck-drain flange at roof drains, and securely seal membrane roofing in place with clamping ring.

J. Adhere protection sheet over membrane roofing at locations indicated.

3.6 BASE FLASHING INSTALLATION

A. Install sheet flashings and preformed flashing accessories, and adhere to substrates according to roofing system manufacturer's written instructions.

B. Apply bonding adhesive to substrate and underside of sheet flashing at required rate, and allow to partially dry. Do not apply to seam area of flashing.

C. Flash penetrations and field-formed inside and outside corners with cured or uncured sheet flashing.

D. Clean splice areas, apply splicing cement, and firmly roll side and end laps of overlapping sheets to ensure a watertight seam installation. Apply lap sealant and seal exposed edges of sheet flashing terminations.

E. Terminate and seal top of sheet flashings and mechanically anchor to substrate through termination bars.

3.7 WALKWAY INSTALLATION

A. Flexible Walkways: Install walkway products in locations indicated. Adhere walkway products to substrate with compatible adhesive according to roofing system manufacturer's written instructions.

3.8 FIELD QUALITY CONTROL

A. Testing Agency: Owner will engage a qualified testing agency to inspect substrate conditions, surface preparation, membrane application, flashings, protection, and drainage components, and to furnish reports to Architect.

3.9 PROTECTING AND CLEANING

A. Protect membrane roofing system from damage and wear during remainder of construction period. When remaining construction does not affect or endanger roofing, inspect roofing for deterioration and damage, describing its nature and extent in a written report, with copies to Architect and Owner.

B. Correct deficiencies in or remove membrane roofing system that does not comply with requirements, repair substrates, and repair or reinstall membrane roofing system to a condition free of damage and deterioration at time of Substantial Completion and according to warranty requirements.

C. Clean overspray and spillage from adjacent construction using cleaning agents and procedures recommended by manufacturer of affected construction.

3.10 ROOFING INSTALLER'S WARRANTY

A. WHEREAS _____ of _____, herein called the "Roofing Installer," has performed roofing and associated work ("work") on the following project:

1. Owner: Red Clay Consolidated School District
2. Address: 1502 Spruce Avenue, Wilmington, DE 19805
3. Building Name/Type: William F. Cooke, Jr. Elementary School

4. Address: 2025 Graves Road, Hockessin, DE 19707
5. Area of Work: Roof
6. Acceptance Date: _____.
7. Warranty Period: 20 Years
8. Expiration Date: _____.

B. AND WHEREAS Roofing Installer has contracted (either directly with Owner or indirectly as a subcontractor) to warrant said work against leaks and faulty or defective materials and workmanship for designated Warranty Period,

C. NOW THEREFORE Roofing Installer hereby warrants, subject to terms and conditions herein set forth, that during Warranty Period he will, at his own cost and expense, make or cause to be made such repairs to or replacements of said work as are necessary to correct faulty and defective work and as are necessary to maintain said work in a watertight condition.

D. This Warranty is made subject to the following terms and conditions:

1. Specifically excluded from this Warranty are damages to work and other parts of the building, and to building contents, caused by:

   a. lightning;
   b. peak gust wind speed exceeding 100 mph.
   c. fire;
   d. failure of roofing system substrate, including cracking, settlement, excessive deflection, deterioration, and decomposition;
   e. faulty construction of parapet walls, copings, chimneys, skylights, vents, equipment supports, and other edge conditions and penetrations of the work;
   f. vapor condensation on bottom of roofing; and
   g. activity on roofing by others, including construction contractors, maintenance personnel, other persons, and animals, whether authorized or unauthorized by Owner.

2. When work has been damaged by any of foregoing causes, Warranty shall be null and void until such damage has been repaired by Roofing Installer and until cost and expense thereof have been paid by Owner or by another responsible party so designated.
3. Roofing Installer is responsible for damage to work covered by this Warranty but is not liable for consequential damages to building or building contents resulting from leaks or faults or defects of work.
4. During Warranty Period, if Owner allows alteration of work by anyone other than Roofing Installer, including cutting, patching, and maintenance in connection with penetrations, attachment of other work, and positioning of anything on roof, this Warranty shall become null and void on date of said alterations, but only to the extent said alterations affect work covered by this Warranty. If Owner engages Roofing Installer to perform said alterations, Warranty shall not become null and void unless Roofing Installer, before starting said work, shall have notified Owner in writing, showing reasonable cause for claim, that said alterations would likely damage or deteriorate work, thereby reasonably justifying a limitation or termination of this Warranty.
5. During Warranty Period, if original use of roof is changed and it becomes used for, but was not originally specified for, a promenade, work deck, spray-cooled surface, flooded basin, or other use or service more severe than originally specified, this Warranty shall become null and void on date of said change, but only to the extent said change affects work covered by this Warranty.
6. Owner shall promptly notify Roofing Installer of observed, known, or suspected leaks, defects, or deterioration and shall afford reasonable opportunity for Roofing Installer to inspect work and to examine evidence of such leaks, defects, or deterioration.
7. This Warranty is recognized to be the only warranty of Roofing Installer on said work and shall not operate to restrict or cut off Owner from other remedies and resources lawfully available to Owner in cases of roofing failure. Specifically, this Warranty shall not operate to relieve Roofing Installer of responsibility for performance of original work according to requirements of the

Contract Documents, regardless of whether Contract was a contract directly with Owner or a subcontract with Owner's General Contractor.

E. IN WITNESS THEREOF, this instrument has been duly executed this _____ day of _____, _____.

1. Authorized Signature: _____.
2. Name: _____.
3. Title: _____.

END OF SECTION 075323

SECTION 076200 - FLASHING AND SHEET METAL

PART 1 – GENERAL

1.1 RELATED DOCUMENTS

A. Drawings and general provisions of the Contract, including General and Supplementary Conditions and Division 1 Specification Sections, apply to this Section.

1.2 SUMMARY

A. Provide all labor, equipment, and materials fabricate and install the following.

1. Fascia, scuppers, and trim.
2. Counterflashings over bituminous base flashing.
3. Counterflashings for roof accessories.
4. Counterflashings at roof mounted equipment and vent stacks.
5. Base flashing coverings.
6. Coping cap at parapets.
7. Gutters, scuppers and down spouts.
8. Counterflashings at walls and penetrations.
9. Lead flashing for bituminous membranes.
10. Other components.

B. RELATED SECTIONS

1. Section 061000 - Rough Carpentry
2. Section 074113 – Metal Roof Panels
3. Section 074215 – Metal Roof Shingles
4. Section 077200 - Roof Accessories
5. Section 079200 - Joint Sealants

1.3 REFERENCES

ASTM A-446	Specification for steel sheet
ASTM B-209	Specification for aluminum sheet
ASTM B-221	Specification for aluminum extruded shape
FS QQ-L-201	Specification for Lead Sheet
ASTM A792	Steel Sheet, Aluminum-Zinc Alloy-Coated, by the Hot-Dip Process
ASTM B32	Solder Metal
ASTM B209	Aluminum and Alloy Sheet and Plate
ASTM B486	Paste Solder
ASTM D226	Asphalt-Saturated Organic Felt Used in Roofing and Waterproofing
ASTM D486	Asphalt Roof Cement, Asbestos-free
FS O-F-506	Flux, Soldering, Paste and Liquid
WH	Warnock Hersey International, Inc. Middleton, WI.
FM	Loss Prevention Data Sheet
NRCA	National Roofing Contractors Association - Roofing Manual
SMACNA	Architectural Sheet Metal Manual

1.4 SUBMITTALS

A. Submit under provisions of all technical performance criteria set forth in the specifications.

B. Product Data: Provide manufacturer's specification data sheets for each product.

C. Provide approval letters from metal manufacturer for use of their metal within this particular roofing system type.

D. Submit two samples, 12 x 12 inch in size illustrating typical external corner, internal corner, valley, junction to vertical dissimilar surface, material and finish.

E. Shop Drawings

1. For manufactured and shop fabricated gravel stops, fascia, scuppers, and all other sheet metal fabrications.
2. Shop drawings: Indicate material profile, jointing pattern, jointing details, fastening methods, flashing, termination's, and installation details.
3. Indicate type, gauge and finish of metal.

F. Certification

1. Submit roof manufacturer's certification that metal fasteners furnished are acceptable to roof manufacturer.
2. Submit roof manufacturer's certification that metal furnished is acceptable to roofing manufacturer as a component of roofing system and is eligible for roof manufacturer's system warranty.
3. Submit certification that metal and fastening system furnished is Tested and Approved by Factory Mutual for I-90 Wind Up-Lift Requirements.

G. Manufacturer's Product Data

1. Metal material characteristics and installation recommendations.
2. Submit color chart prior to material ordering and/or fabrication so that equivalent colors to those specified can be approved.

1.5 QUALITY CONTROL

A. Reference Standards

1. Comply with details and recommendations of SMACNA for methods of joining, anchorage, provisions for expansion, etc.
2. Factory Mutual Loss Prevention Data Sheet 1-49 windstorm resistance 1-90.

B. Manufacturer's Warranty

1. Pre-finished metal material shall require a written 30-year non-prorated warranty covering fade, chalking and film integrity. The material shall not show a color change greater than 5 NBS color units per ASTM D-2244 or chalking excess of 8 units per ASTM D-659. If either occurs material shall be replaced per warranty, at no cost to the Owner.

C. Contractor's Warranty

1. The Contractor shall provide the Owner with a notarized written warranty assuring that all sheet metal work including caulking and fasteners to be watertight and secure for a period

of two years from the date of final acceptance of the building. Warranty shall include all materials and workmanship required to repair any leaks that develop, and make good any damage to other work or equipment caused by such leaks or the repairs thereof.

1.6 QUALIFICATIONS

A. Fabricator and Installer: Company specializing in sheet metal flashing work with 5 years experience.

1.7 DELIVERY, STORAGE, AND HANDLING

A. Deliver materials in manufacturer's original, unopened containers or packages with labels intact and legible.

B. Stack pre-formed and pre-finished material to prevent twisting, bending, or abrasion, and to provide ventilation. Slope metal sheets to ensure drainage.

C. Prevent contact with materials which may cause discoloration or staining.

PART 2 - PRODUCTS

2.1 MATERIALS

A. Metal system is to be comprised of minimum Aluminum or Galvalume steel, coated on both sides with an epoxy primer and on the weathering surface with a polyvinylidene fluoride or siliconized polyester baked organic coated finish.

1. Materials

a. Aluminum-Zinc alloy Coated Steel

Aluminum-zinc alloy (galvalume) coated steel, ASTM A792, coating designation AZ-50, in thickness of .0217 nom. /24 gauge or .040 Aluminum; 36" to 48" by coil length, chemically treated, commercial or lock-forming quality.

*Subject to minimum quantity requirements
*Standard Kynar 500 finish coating is only accepted.

b. Coliors shall be custom to match metal roof color.

B. Miscellaneous Metals and Flashings:

1. Zinc-Coated Steel Sheet: ASTM A526, 0.20% copper, 26 gage (0.0179"); designation G90 hot-dip galvanized, mill phosphatized.
2. Stainless Steel Sheet: Type 302/304, ASTM A167, 28 gage, (0.015"), annealed except dead soft where fully concealed by other work, 2D (dull) finish.
3. Copper Sheet: ASTM B370, 16 oz. (0.0216), temper HOO (cold-rolled).
4. Lead-Coated Copper Sheet: ASTM B101. Type I, Class A (12-15 1 lb. of lead coating per 100 sq. ft.), 17.1 oz. (0.022").
5. Zinc Alloy Sheet: Zinc with 0.6% copper and 0.14% titanium; 0.27" thick (21 gauge); standard (soft) temper, mil finish.

2.2 RELATED MATERIALS

A. Metal Primer: Zinc chromate type.

B. Plastic Cement: ASTM D 4586

C. Sealant: Specified in Section 07900 or on drawings.

D. Lead: Meets Federal Specification QQ-L-201, Grade B, four pounds per square foot.

E. Solder: ANSI/ASTM B32; 95/05 type.

F. Flux: FS O-F-506.

G. Underlayment: ASTM D2178, No15 asphalt saturated roofing felt.

H. Slip Sheet: Rosin sized building paper.

I. Fasteners:

1. Corrosion resistant screw fastener as recommended by metal manufacturer. Finish exposed fasteners same as flashing metal.
2. Fastening shall conform to Factory Mutual I-90 requirements or as stated on section details, whichever is more stringent.

J. Termination Bars:

1. Shall be aluminum unless otherwise recommended by membrane manufacturers.
2. Material shall be .125” x 1” (minimum) aluminum conforming to ASTM B-221, mill finish. Bar shall have caulk cup as required.

K. Gutter and Downspout Anchorage Devices: Type recommended by fabricator.

PART 3 - EXECUTION

3.1 PROTECTION

A. Protect contact areas of dissimilar metals with heavy asphalt or other approved coating, specifically made to stop electrolytic action.

3.2 GENERAL

A. Install work watertight, without waves, warps, buckles, fastening stress, or distortion, allowing for expansion and contraction.

B. Fastening of metal to walls and wood blocking shall comply with SMACNA Architectural Sheet Metal Manual, Factory Mutual I-90 wind uplift specifications and/or manufacturer's recommendations whichever is of the highest standard.

C. All accessories or other items essential to the completeness of sheet metal installation, whether specifically indicated or not, shall be provided and of the same material as item to which applied.

D. Metal fascia and copings shall be secured to wood nailers at the bottom edge with a continuous cleat. Cleats shall be at least one gauge heavier than the metal it secures.

3.3 INSPECTION

A. Verify roof openings, curbs, pipes, sleeves, ducts, or vents through roof are solidly set, cant strips and reglets are in place, and nailing strips located.

B. Verify membrane termination and base flashings are in place, sealed, and secure.

C. Beginning of installation means acceptance of existing conditions.

D. Field measure site conditions prior to fabricating work.

3.4 MANUFACTURED SHEET METAL SYSTEMS

A. Installing Contractor shall be responsible for determining if the sheet metal systems are in general conformance with roof manufacturer's recommendations.

B. Furnish and install manufactured sheet metal systems in strict accordance with manufacturer's printed instructions.

C. Provide all factory-fabricated accessories including, but not limited to, fascia extenders, miters, scuppers, joint covers, etc.

3.5 SHOP FABRICATED SHEET METAL

A. Installing Contractor shall be responsible for determining if the sheet metal systems are in general conformance with roof manufacturer's recommendations.

B. Metal work shall be shop fabricated to configurations and forms in accordance with recognized sheet metal practices.

C. Hem exposed edges.

D. Angle bottom edges of exposed vertical surfaces to form drip.

E. All corners for sheet metal shall be lapped with adjoining pieces fastened and set in sealant.

F. Joints for gravel stop fascia system, cap flashing, and surface-mount counterflashing shall be formed with a 1/4” opening between sections. The opening shall be covered by a cover plate or backed by an internal drainage plate formed to the profile of fascia piece. The cover plate shall be embedded in mastic, fastened through the opening between the sections and loose locked to the drip edges.

G. Install sheet metal to comply with Architectural Sheet Metal manual, Sheet Metal and Air Conditioning Contractor's National Associations, Inc.

3.6 FLASHING MEMBRANE INSTALLATION

A. COPING CAP

1. Copings shall be provided with factory fabricated welded watertight coping accessories such as miters, transitions, end caps, etc. and finished to match coping system. No exposed fasteners will be accepted throughout the entire project.
2. Accessories: Joint covers, corners, supports, strip flashing at joinings, fastening, and other accessories shall be included.
3. Install continuous cleat fasten 6" O.C.
4. Install new coping cap hooked to continuous cleat.

B. SURFACE MOUNTED COUNTERFLASHING/COPING CAP

1. Copings shall be provided with factory fabricated welded watertight coping accessories such as miters, transitions, end caps, etc. and finished to match coping system. No exposed fasteners will be accepted throughout the entire project.
2. Accessories: Joint covers, corners, supports, strip flashing at joinings, fastening, and other accessories shall be included.
3. Install continuous cleat fasten 6" O.C.
4. Install new coping cap hooked to continuous cleat.

C. SURFACE MOUNTED COUNTERFLASHING

1. Counterflashing shall be provided with watertight accessories such as miters, transitions, end caps, etc. and finished to match counterflashing.
2. Accessories: Joint covers, corners, fasteners, strip flashing at joinings, fastening, and other accessories shall be included.
3. Apply butyl tape to wall behind flashing. Secure termination bar through flashing butyl tape and into wall.
4. Secure new counterflashing set on a butyl tape above flashing 8" O.C., caulk top of counterflashing.

D. REGLET MOUNTED COUNTERFLASHING

1. Reglet shall be provided with watertight accessories such as miters, transitions, end caps, etc. and finished to match.
2. Accessories: Joint covers, corners, fasteners, strip flashing at joinings, fastening, and other accessories shall be included.
3. Cut reglet in masonry one joint above flashing.
4. Apply butyl tape to wall behind flashing. Secure termination bar through flashing butyl tape and into wall.
5. Secure reglet counterflashing with expansion fasteners and caulk reglet opening.

E. ROOF DRAIN

1. Prime lead/copper at a rate of 100 square feet per gallon and allow to dry.
2. Set lead/copper flashing (30" square minimum) in a 1/4" bed of mastic.
3. Install clamping ring and strainer assure all plies are under the clamping ring.

F. PLUMBING STACK

1. Prime flange and sleeve at a rate of 100 square feet per gallon and allow to dry.
2. Install properly sized sleeves in a 1/4" bed of elastomeric sealant.
3. Turn sleeve a minimum of 1" down inside of stack.
4. Caulk intersection of the membrane and flange with elastomeric sealant.

END OF SECTION 076200

SECTION 077200 - ROOF ACCESSORIES

PART 1 - GENERAL

1.1 RELATED DOCUMENTS

A. Drawings and general provisions of the Contract, including General and Supplementary Conditions and Division 1 Specification Sections, apply to this Section.

1.2 SUMMARY

A. This Section includes the following:

1. Roof curbs.

B. Related Sections include the following:

1. Division 5 Section "Metal Fabrications" for ladders and miscellaneous metal framing and supports.
2. Division 6 Section "Rough Carpentry" for roof sheathing, wood cants, and wood nailers.
3. Division 7 Section "Flashing and Sheet Metal" for shop- and field-fabricated metal flashing and counterflashing, scuppers, gutters and downspouts, fasciae, roof expansion-joint covers, valleys, and miscellaneous sheet metal trim and accessories.
4. Division 7 Sections for roofing accessories included as part of roofing Work.
5. Division 9 Sections for shop primers and field painting.
6. Division 23 Section "Power Ventilators" for power roof-mounted ventilators.

1.3 SUBMITTALS

A. Product Data: For each type of product indicated. Include construction details, materials, dimensions of individual components and profiles, and finishes.

B. Shop Drawings: Show fabrication and installation details. Indicate dimensions, weights, loadings, required clearances, method of field assembly, and components. Include plans, elevations, sections, details, and attachments to other Work.

C. Samples for Initial Selection: Manufacturer's color charts showing the full range of colors available for roof accessories with factory-applied color finishes.

D. Samples for Verification: For each type of exposed finish required, prepared on Samples in manufacturer's standard sizes, and of same thickness and material indicated for the Work. If finishes involve normal color or shade variations, include sample sets showing the full range of variations expected.

1.4 QUALITY ASSURANCE

A. Standards: Comply with the following:

1. SMACNA's "Architectural Sheet Metal Manual" details for fabrication of units, including flanges and cap flashing to coordinate with type of roofing indicated.
2. NRCA's "Roofing and Waterproofing Manual" details for installing units.

PART 2 - PRODUCTS

2.1 MANUFACTURERS

A. Available Manufacturers: Subject to compliance with requirements, manufacturers offering products that may be incorporated into the Work include, but are not limited to, the following:

1. Roof Curbs and Equipment Supports:

a. Custom Curb, Inc.
b. Roof Products & Systems Corp.
c. ThyCurb, Inc.

2.2 MATERIALS, GENERAL

A. Aluminum Sheet: ASTM B 209 (ASTM B 209M) for alclad alloy 3005H25 or alloy and temper required to suit forming operations, with mill finish, unless otherwise indicated.

B. Extruded Aluminum: ASTM B 221 (ASTM B 221M) alloy 6063-T52 or alloy and temper required to suit structural and finish requirements, with mill finish, unless otherwise indicated.

C. Galvanized Steel Sheet: ASTM A 653/A 653M with G90 (Z275) coating designation; commercial quality, unless otherwise indicated.

1. Structural Quality: Grade 40 (Grade 275), where indicated or as required for strength.

D. Aluminum-Zinc Alloy-Coated Steel Sheet: ASTM A 792/A 792M with Class AZ-50 (AZ-150) coating, structural quality, Grade 40 (Grade 275), or as required for strength.

E. Insulation: Manufacturer's standard rigid or semirigid glass-fiber board of thickness indicated.

F. Wood Nailers: Softwood lumber, pressure treated with waterborne preservatives for aboveground use, complying with AWPA C2; not less than 1-1/2 inches (38 mm) thick.

G. Fasteners: Same metal as metals being fastened, or nonmagnetic stainless steel or other noncorrosive metal as recommended by manufacturer. Match finish of exposed fasteners with finish of material being fastened.

1. Where removing exterior exposed fasteners affords access to building, provide nonremovable fastener heads.

H. Gaskets: Manufacturer's standard tubular or fingered design of neoprene, EPDM, or PVC; or flat design of foam rubber, sponge neoprene, or cork.

I. Bituminous Coating: SSPC-Paint 12, solvent-type bituminous mastic, nominally free of sulfur and containing no asbestos fibers, compounded for 15-mil (0.4-mm) dry film thickness per coating.

J. Mastic Sealant: Polyisobutylene; nonhardening, nonskinning, nondrying, nonmigrating sealant.

K. Elastomeric Sealant: Generic type recommended by unit manufacturer that is compatible with joint surfaces; ASTM C 920, Type S, Grade NS, Class 25, and Uses NT, G, A, and, as applicable to joint substrates indicated, O.

L. Roofing Cement: ASTM D 4586, nonasbestos, fibrated asphalt cement designed for trowel application or other adhesive compatible with roofing system.

2.3 ROOF CURBS

A. General: Provide roof curbs capable of supporting superimposed live and dead loads, including equipment loads and other construction to be supported on roof curbs. Coordinate dimensions with rough-in information or Shop Drawings of equipment to be supported.

B. Fabrication: Unless otherwise indicated or required for strength, fabricate units from minimum 0.0747-inch- (1.9-mm-) thick, structural-quality, hot-dip galvanized or aluminum-zinc alloy-coated steel sheet; factory primed and prepared for painting with welded or sealed mechanical corner joints.

2.4 FINISHES, GENERAL

A. Comply with NAAMM's "Metal Finishes Manual for Architectural and Metal Products" for recommendations for applying and designating finishes.

B. Protect mechanical finishes on exposed surfaces from damage by applying a strippable, temporary protective covering before shipping.

C. Appearance of Finished Work: Variations in appearance of abutting or adjacent pieces are acceptable if they are within one-half of the range of approved Samples. Noticeable variations in the same piece are not acceptable. Variations in appearance of other components are acceptable if they are within the range of approved Samples and are assembled or installed to minimize contrast.

2.5 GALVANIZED STEEL SHEET FINISHES

A. Surface Preparation: Clean surfaces with nonpetroleum solvent so surfaces are free of oil and other contaminants. After cleaning, apply a conversion coating suited to the organic coating to be applied over it. Clean welds, mechanical connections, and abraded areas, and apply galvanizing repair paint specified below to comply with ASTM A 780.

1. Galvanizing Repair Paint: High-zinc-dust-content paint for regalvanizing welds in steel, complying with SSPC-Paint 20.

B. High-Performance Organic Finish: Cleaned and primed with inhibitive primer and organic coating as specified below. Prepare, pretreat, and apply coating to exposed metal surfaces to comply with coating and resin manufacturers' written instructions.

1. Fluoropolymer Three-Coat System: Manufacturer's standard three-coat, thermocured system consisting of specially formulated inhibitive primer, fluoropolymer color coat, and clear fluoropolymer topcoat, with both color coat and clear topcoat containing not less than 70 percent polyvinylidene fluoride resin by weight; complying with AAMA 621 for coil-coated sheets.

a. Color and Gloss: As selected by Architect from manufacturer's standard of colors.

PART 3 - EXECUTION

3.1 INSTALLATION

A. General: Comply with manufacturer's written instructions. Coordinate installation of roof accessories with installation of roof deck, roof insulation, flashing, roofing membranes, penetrations, equipment, and other construction involving roof accessories to ensure that each element of the Work performs properly and that combined elements are waterproof and weathertight. Anchor roof accessories securely to

supporting structural substrates so they are capable of withstanding lateral and thermal stresses, and inward and outward loading pressures.

B. Install roof accessory items according to construction details of NRCA's "Roofing and Waterproofing Manual," unless otherwise indicated.

C. Separation: Separate metal from incompatible metal or corrosive substrates, including wood, by coating concealed surfaces, at locations of contact, with bituminous coating or providing other permanent separation.

D. Flange Seals: Unless otherwise indicated, set flanges of accessory units in a thick bed of roofing cement to form a seal.

E. Cap Flashing: Where required as component of accessory, install cap flashing to provide waterproof overlap with roofing or roof flashing (as counterflashing). Seal overlap with thick bead of mastic sealant.

3.2 CLEANING AND PROTECTION

A. Clean exposed surfaces according to manufacturer's written instructions. Touch up damaged metal coatings.

END OF SECTION 077200

SECTION 078413 - PENETRATION FIRESTOPPING

PART 1 - GENERAL

1.1 RELATED DOCUMENTS

A. Drawings and general provisions of the Contract, including General and Supplementary Conditions and Division 01 Specification Sections, apply to this Section.

1.2 SUMMARY

A. Section Includes:

1. Penetrations in fire-resistance-rated walls.
2. Penetrations in horizontal assemblies.
3. Penetrations in smoke barriers.

B. Related Sections:

1. Section 078446 "Fire-Resistive Joint Systems" for joints in or between fire-resistance-rated construction, at exterior curtain-wall/floor intersections, and in smoke barriers.

1.3 ACTION SUBMITTALS

A. Product Data: For each type of product indicated.

B. Product Schedule: For each penetration firestopping system. Include location and design designation of qualified testing and inspecting agency.

1. Where Project conditions require modification to a qualified testing and inspecting agency's illustration for a particular penetration firestopping condition, submit illustration, with modifications marked, approved by penetration firestopping manufacturer's fire-protection engineer as an engineering judgment or equivalent fire-resistance-rated assembly.

1.4 QUALITY ASSURANCE

A. Installer Qualifications: A firm experienced in installing penetration firestopping similar in material, design, and extent to that indicated for this Project, whose work has resulted in construction with a record of successful performance. Qualifications include having the necessary experience, staff, and training to install manufacturer's products per specified requirements. Manufacturer's willingness to sell its penetration firestopping products to Contractor or to Installer engaged by Contractor does not in itself confer qualification on buyer.

B. Fire-Test-Response Characteristics: Penetration firestopping shall comply with the following requirements:

1. Penetration firestopping tests are performed by a qualified testing agency acceptable to authorities having jurisdiction.

2. Penetration firestopping is identical to those tested per testing standard referenced in "Penetration Firestopping" Article. Provide rated systems complying with the following requirements:

   a. Penetration firestopping products bear classification marking of qualified testing and inspecting agency.
   b. Classification markings on penetration firestopping correspond to designations listed by the following:

      1) UL in its "Fire Resistance Directory."

1.5 PROJECT CONDITIONS

A. Environmental Limitations: Do not install penetration firestopping when ambient or substrate temperatures are outside limits permitted by penetration firestopping manufacturers or when substrates are wet because of rain, frost, condensation, or other causes.

B. Install and cure penetration firestopping per manufacturer's written instructions using natural means of ventilations or, where this is inadequate, forced-air circulation.

1.6 COORDINATION

A. Coordinate construction of openings and penetrating items to ensure that penetration firestopping is installed according to specified requirements.

B. Coordinate sizing of sleeves, openings, core-drilled holes, or cut openings to accommodate penetration firestopping.

C. Notify Owner's testing agency at least seven days in advance of penetration firestopping installations; confirm dates and times on day preceding each series of installations.

PART 2 - PRODUCTS

2.1 MANUFACTURERS

A. Manufacturers: Subject to compliance with requirements, provide products by one of the following:

1. A/D Fire Protection Systems Inc.
2. Grace Construction Products.
3. Hilti, Inc.
4. Johns Manville.
5. Nelson Firestop Products.
6. NUCO Inc.
7. Passive Fire Protection Partners.
8. RectorSeal Corporation.
9. Specified Technologies Inc.
10. 3M Fire Protection Products.
11. Tremco, Inc.; Tremco Fire Protection Systems Group.
12. USG Corporation.

2.2 PENETRATION FIRESTOPPING

A. Provide penetration firestopping that is produced and installed to resist spread of fire according to requirements indicated, resist passage of smoke and other gases, and maintain original fire-resistance rating of construction penetrated. Penetration firestopping systems shall be compatible with one another, with the substrates forming openings, and with penetrating items if any.

B. Penetrations in Fire-Resistance-Rated Walls: Provide penetration firestopping with ratings determined per ASTM E 814 or UL 1479, based on testing at a positive pressure differential of 0.01-inch wg (2.49 Pa).

1. Fire-resistance-rated walls include fire walls, fire-barrier walls, smoke-barrier walls, and fire partitions.
2. F-Rating: Not less than the fire-resistance rating of constructions penetrated.

C. Penetrations in Horizontal Assemblies: Provide penetration firestopping with ratings determined per ASTM E 814 or UL 1479, based on testing at a positive pressure differential of 0.01-inch wg (2.49 Pa).

1. Horizontal assemblies include floors, floor/ceiling assemblies, and ceiling membranes of roof/ceiling assemblies.
2. F-Rating: At least 1 hour, but not less than the fire-resistance rating of constructions penetrated.
3. T-Rating: At least 1 hour, but not less than the fire-resistance rating of constructions penetrated except for floor penetrations within the cavity of a wall.

D. Penetrations in Smoke Barriers: Provide penetration firestopping with ratings determined per UL 1479.

1. L-Rating: Not exceeding 5.0 cfm/sq. ft. (0.025 cu. m/s per sq. m) of penetration opening at 0.30-inch wg (74.7 Pa) at both ambient and elevated temperatures.

E. W-Rating: Provide penetration firestopping showing no evidence of water leakage when tested according to UL 1479.

F. Exposed Penetration Firestopping: Provide products with flame-spread and smoke-developed indexes of less than 25 and 450, respectively, as determined per ASTM E 84.

G. Accessories: Provide components for each penetration firestopping system that are needed to install fill materials and to maintain ratings required. Use only those components specified by penetration firestopping manufacturer and approved by qualified testing and inspecting agency for firestopping indicated.

1. Permanent forming/damming/backing materials, including the following:

   a. Slag-wool-fiber or rock-wool-fiber insulation.
   b. Sealants used in combination with other forming/damming/backing materials to prevent leakage of fill materials in liquid state.
   c. Fire-rated form board.
   d. Fillers for sealants.

2. Temporary forming materials.
3. Substrate primers.
4. Collars.
5. Steel sleeves.

2.3 FILL MATERIALS

A. Cast-in-Place Firestop Devices: Factory-assembled devices for use in cast-in-place concrete floors and consisting of an outer metallic sleeve lined with an intumescent strip, a radial extended flange attached to one end of the sleeve for fastening to concrete formwork, and a neoprene gasket.

B. Latex Sealants: Single-component latex formulations that do not re-emulsify after cure during exposure to moisture.

C. Firestop Devices: Factory-assembled collars formed from galvanized steel and lined with intumescent material sized to fit specific diameter of penetrant.

D. Intumescent Composite Sheets: Rigid panels consisting of aluminum-foil-faced elastomeric sheet bonded to galvanized-steel sheet.

E. Intumescent Putties: Nonhardening dielectric, water-resistant putties containing no solvents, inorganic fibers, or silicone compounds.

F. Intumescent Wrap Strips: Single-component intumescent elastomeric sheets with aluminum foil on one side.

G. Mortars: Prepackaged dry mixes consisting of a blend of inorganic binders, hydraulic cement, fillers, and lightweight aggregate formulated for mixing with water at Project site to form a nonshrinking, homogeneous mortar.

H. Pillows/Bags: Reusable heat-expanding pillows/bags consisting of glass-fiber cloth cases filled with a combination of mineral-fiber, water-insoluble expansion agents, and fire-retardant additives. Where exposed, cover openings with steel-reinforcing wire mesh to protect pillows/bags from being easily removed.

I. Silicone Foams: Multicomponent, silicone-based liquid elastomers that, when mixed, expand and cure in place to produce a flexible, nonshrinking foam.

J. Silicone Sealants: Single-component, silicone-based, neutral-curing elastomeric sealants of grade indicated below:

1. Grade: Pourable (self-leveling) formulation for openings in floors and other horizontal surfaces, and nonsag formulation for openings in vertical and sloped surfaces, unless indicated firestopping limits use of nonsag grade for both opening conditions.

2.4 MIXING

A. For those products requiring mixing before application, comply with penetration firestopping manufacturer's written instructions for accurate proportioning of materials, water (if required), type of mixing equipment, selection of mixer speeds, mixing containers, mixing time, and other items or procedures needed to produce products of uniform quality with optimum performance characteristics for application indicated.

PART 3 - EXECUTION

3.1 EXAMINATION

A. Examine substrates and conditions, with Installer present, for compliance with requirements for opening configurations, penetrating items, substrates, and other conditions affecting performance of the Work.

B. Proceed with installation only after unsatisfactory conditions have been corrected.

3.2 PREPARATION

A. Surface Cleaning: Clean out openings immediately before installing penetration firestopping to comply with manufacturer's written instructions and with the following requirements:

1. Remove from surfaces of opening substrates and from penetrating items foreign materials that could interfere with adhesion of penetration firestopping.
2. Clean opening substrates and penetrating items to produce clean, sound surfaces capable of developing optimum bond with penetration firestopping. Remove loose particles remaining from cleaning operation.
3. Remove laitance and form-release agents from concrete.

B. Priming: Prime substrates where recommended in writing by manufacturer using that manufacturer's recommended products and methods. Confine primers to areas of bond; do not allow spillage and migration onto exposed surfaces.

C. Masking Tape: Use masking tape to prevent penetration firestopping from contacting adjoining surfaces that will remain exposed on completion of the Work and that would otherwise be permanently stained or damaged by such contact or by cleaning methods used to remove stains. Remove tape as soon as possible without disturbing firestopping's seal with substrates.

3.3 INSTALLATION

A. General: Install penetration firestopping to comply with manufacturer's written installation instructions and published drawings for products and applications indicated.

B. Install forming materials and other accessories of types required to support fill materials during their application and in the position needed to produce cross-sectional shapes and depths required to achieve fire ratings indicated.

1. After installing fill materials and allowing them to fully cure, remove combustible forming materials and other accessories not indicated as permanent components of firestopping.

C. Install fill materials for firestopping by proven techniques to produce the following results:

1. Fill voids and cavities formed by openings, forming materials, accessories, and penetrating items as required to achieve fire-resistance ratings indicated.
2. Apply materials so they contact and adhere to substrates formed by openings and penetrating items.
3. For fill materials that will remain exposed after completing the Work, finish to produce smooth, uniform surfaces that are flush with adjoining finishes.

3.4 IDENTIFICATION

A. Identify penetration firestopping with preprinted metal or plastic labels. Attach labels permanently to surfaces adjacent to and within 6 inches (150 mm) of firestopping edge so labels will be visible to anyone seeking to remove penetrating items or firestopping. Use mechanical fasteners or self-adhering-type labels with adhesives capable of permanently bonding labels to surfaces on which labels are placed. Include the following information on labels:

1. The words "Warning - Penetration Firestopping - Do Not Disturb. Notify Building Management of Any Damage."
2. Contractor's name, address, and phone number.
3. Designation of applicable testing and inspecting agency.
4. Date of installation.
5. Manufacturer's name.
6. Installer's name.

3.5 FIELD QUALITY CONTROL

A. Owner will engage a qualified testing agency to perform tests and inspections.

B. Where deficiencies are found or penetration firestopping is damaged or removed because of testing, repair or replace penetration firestopping to comply with requirements.

C. Proceed with enclosing penetration firestopping with other construction only after inspection reports are issued and installations comply with requirements.

3.6 CLEANING AND PROTECTION

A. Clean off excess fill materials adjacent to openings as the Work progresses by methods and with cleaning materials that are approved in writing by penetration firestopping manufacturers and that do not damage materials in which openings occur.

B. Provide final protection and maintain conditions during and after installation that ensure that penetration firestopping is without damage or deterioration at time of Substantial Completion. If, despite such protection, damage or deterioration occurs, immediately cut out and remove damaged or deteriorated penetration firestopping and install new materials to produce systems complying with specified requirements.

END OF SECTION 078413

SECTION 079200 - JOINT SEALANTS

PART 1 - GENERAL

1.1 RELATED DOCUMENTS

A. Drawings and general provisions of the Contract, including General and Supplementary Conditions and Division 1 Specification Sections, apply to this Section.

1.2 SUMMARY

A. This Section includes sealants for the following locations:

1. Exterior joints in vertical surfaces and nontraffic horizontal surfaces as indicated below:

   a. Control and expansion joints in cast-in-place concrete.
   b. Control and expansion joints in unit masonry.
   c. Perimeter joints between materials listed above and frames of doors and windows.
   d. Joints between dissimilar materials.
   e. Joints in cast stone as indicated in Division 4 Section “Cast Stone.”
   f. Other joints as indicated.
   g. Joints between curtain wall frame and dissimilar materials

2. Exterior joints in horizontal traffic surfaces as indicated below:

   a. Control, expansion, and isolation joints in cast-in-place concrete slabs.
   b. Joints between dissimilar materials.
   c. Other joints as indicated.

3. Interior joints in vertical surfaces and horizontal nontraffic surfaces as indicated below:

   a. Control and expansion joints on exposed interior surfaces of exterior walls.
   b. Perimeter joints of exterior openings where indicated.
   c. Tile control and expansion joints.
   d. Vertical control joints on exposed surfaces of interior unit masonry and concrete walls and partitions.
   e. Perimeter joints between interior wall surfaces and frames of interior doors and windows.
   f. Perimeter joints of toilet fixtures.
   g. Joints between dissimilar materials.
   h. Joints where acoustical sealant is called for under Wall Type General Notes on drawings.
   i. Other joints as indicated.
   j. Joints between curtain wall frame and dissimilar materials.

4. Interior joints in horizontal traffic surfaces as indicated below:

   a. Control and expansion joints in cast-in-place concrete slabs.
   b. Control and expansion joints in tile and terrazzo flooring.
   c. Joints between dissimilar materials.
   d. Other joints as indicated.

5. Fire Resistant Sealers

B. Related Sections include the following:

1. Division 7 Section "Flashing and Sheet Metal" for sealing joints related to flashing and sheet metal for

roofing.
2. Division 7 Section "Firestopping" for through-penetration firestopping systems.
3. Division 8 "Glazing" for sealants used in glazing.
4. Division 9 Section "Tile" for sealing tile joints.

1.3 PERFORMANCE REQUIREMENTS

A. Provide elastomeric joint sealants that have been produced and installed to establish and to maintain watertight and airtight continuous seals without causing staining or deterioration of joint substrates.

B. Provide joint sealants for interior applications that have been produced and installed to establish and maintain airtight continuous seals that are water resistant and cause no staining or deterioration of joint substrates.

1.4 SUBMITTALS

A. General: Submit the following in accordance with Conditions of Contract and Division 1 Specification Sections.

B. Product data from manufacturers for each joint sealant product required.

C. Samples for initial selection purposes in form of manufacturer's standard bead samples, consisting of strips of actual products showing standard range of colors available, for each product exposed to view.

1.5 QUALITY ASSURANCE

A. Installer Qualifications: Engage an experienced Installer who has completed joint sealant applications similar in material, design, and extent to that indicated for Project that have resulted in construction with a record of successful in-service performance.

B. Single Source Responsibility for Joint Sealant Materials: Obtain joint sealant materials from a single manufacturer for each different product required.

C. Field-Constructed Mock-Ups: Prior to installation of joint sealants, apply elastomeric sealants as follows to verify selections made under sample submittals and to demonstrate aesthetic effects as well as qualities of materials and execution:

1. Joints in field-constructed mock-ups of assemblies specified in other Sections that are indicated to receive elastomeric joint sealants specified in this Section.

1.6 DELIVERY, STORAGE, AND HANDLING

A. Deliver materials to Project site in original unopened containers or bundles with labels indicating manufacturer, product name and designation, color, expiration date, pot life, curing time, and mixing instructions for multicomponent materials.

B. Store and handle materials in compliance with manufacturer's written instructions to prevent their deterioration or damage due to moisture, high or low temperatures, contaminants, or other causes.

1.7 PROJECT CONDITIONS

A. Environmental Limitations: Do not proceed with installation of joint sealants under the following conditions:

1. When ambient and substrate temperature conditions are outside limits permitted by joint sealant manufacturer.
2. When ambient and substrate temperature conditions are outside limits permitted by joint sealant

manufacturer or are below 40 deg F (4.4 deg C).

3. When joint substrates are wet.

B. Joint-Width Conditions: Do not proceed with installation of joint sealants where joint widths are less than those allowed by joint sealant manufacturer for applications indicated.

C. Joint-Substrate Conditions: Do not proceed with installation of joint sealants until contaminants capable of interfering with adhesion are removed from joint substrates.

1.8 SEQUENCING AND SCHEDULING

A. Sequence installation of joint sealants to occur not less than 21 nor more than 30 days after completion of waterproofing, unless otherwise indicated.

PART 2 - PRODUCTS

2.1 MATERIALS, GENERAL

A. Compatibility: Provide joint sealants, joint fillers, and other related materials that are compatible with one another and with joint substrates under conditions of service and application, as demonstrated by sealant manufacturer based on testing and field experience.

B. Colors: Provide color of exposed joint sealants to comply with the following:

1. Provide selections made by Architect from manufacturer's full range of standard colors for products of type indicated. Color selection must provide equivalent to match adjacent materials.

2.2 ELASTOMERIC JOINT SEALANTS (Interior & Exterior Vertical & Horizontal Joints)

A. Elastomeric Sealant Standard: Provide manufacturer's standard chemically curing elastomeric sealants that comply with ASTM C 920 and including those requirements referencing ASTM C920 classifications for Type, Grade, Class and Uses.

B. Base polymer must be silicone.

C. Available Products: Subject to compliance with requirements, chemically curing elastomeric sealants that may be incorporated in the Work include, but are not limited to, the following:

Substrate/Detail	Dow Corning Product
Brick to Window Frame	Solvent Wipe Dow Corning 1200 primer to brick substrates Dow Corning 795
Brick to Brick	Solvent Wipe (non-alcohol type) Dow Corning 790 OR Dow Corning 1200 Primer Dow Corning 795
Brick to Precast/Concrete	Solvent Wipe (non-alcohol type) Dow Corning 790

OR

Solvent Wipe
Dow Corning 1200 Primer
Dow Corning 795

Metal to Metal As recommended by sealant manufacturer.

2.3 LATEX JOINT SEALANTS (Interior Joints in Vertical & Horizontal Surfaces)

A. General: Provide manufacturer's standard one-part, nonsag, mildew-resistant, paintable latex sealant of formulation indicated that is recommended for exposed applications on interior and protected exterior locations and that accommodates indicated percentage change in joint width existing at time of installation without failing either adhesively or cohesively.

B. Acrylic-Emulsion Sealant: Provide product complying with ASTM C 834 that accommodates joint movement of not more than 5 percent in both extension and compression for a total of 10 percent.

C. Silicone Emulsion Sealant: Provide product complying with ASTM C 834 and, except for weight loss measured per ASTM C 792, with ASTM C 920 that accommodates joint movement of not more than 25 percent in both extension and compression for a total of 10 percent.

D. Available Products: Subject to compliance with requirements, latex joint sealants that may be incorporated in the Work include, but are not limited to, the following:

1. Acrylic-Emulsion Sealant:

a. "AC-20", Pecora Corp.
b. "Sonolac", Sonneborn Building Products Div., ChemRex, Inc.
c. "Tremco Acrylic Latex 834", Tremco, Inc.

2. Silicone-Emulsion Sealant:

a. "Trade Mate Paintable Glazing Sealant", Dow Corning Corp.

2.4 ACOUSTICAL JOINT SEALANTS

A. Acoustical Sealant: Manufacturer's standard nonsag, paintable, nonstaining latex sealant complying with ASTM C 834 and the following requirements:

1. Product is effective in reducing airborne sound transmission through perimeter joints and openings in building construction as demonstrated by testing representative assemblies per ASTM E 90.
2. Product has flame spread and smoke developed ratings of less than 25 per ASTM E 84.

B. Acoustical Sealant for Concealed Joints: Manufacturer's standard, nondrying, nonhardening, nonskinning, nonstaining, gunnable, synthetic-rubber sealant recommended for sealing interior concealed joints to reduce airborne sound transmission.

C. Available Products: Subject to compliance with requirements, acoustical joint sealants that may be incorporated in the Work include, but are not limited to, the following:

1. Acoustical Sealant:

a. "SHEETROCK Acoustical Sealant", United States Gypsum Co.

b. "AC-20 FTR Acoustical and Insulation Sealant", Pecora Corp.

2. Acoustical Sealant for Concealed Joints:

a. "BA-98", Pecora Corp.
b. "Tremco Acoustical Sealant", Tremco, Inc.

2.5 TAPE SEALANTS

A. Tape Sealant: Manufacturer's standard, solvent-free, butyl-based tape sealant with a solids content of 100 percent formulated to be nonstaining, paintable, and nonmigrating in contact with nonporous surfaces with or without reinforcement thread to prevent stretch and packaged on rolls with a release paper on one side.

B. Available Products: Subject to compliance with requirements, tape sealants that may be incorporated in the Work include, but are not limited to, the following:

1. "Extru-Seal Tape", Pecora Corp.
2. "Shim-Seal Tape", Pecora Corp.
3. "PTI 606", Protective Treatments, Inc.
4. "Tremco 440 Tape", Tremco, Inc.
5. "MBT-35", Tremco, Inc.

2.6 JOINT-SEALANT BACKING

A. General: Provide sealant backings of material and type that are nonstaining; are compatible with joint substrates, sealants, primers, and other joint fillers; and are approved for applications indicated by sealant manufacturer based on field experience and laboratory testing.

B. Plastic Foam Joint Fillers: Preformed compressible, resilient, nonstaining, nonwaxing, nonextruding strips of flexible plastic foam of material indicated below and of size, shape, and density t control sealant depth and otherwise contribute to producing optimum sealant performance:

1. Open-cell polyurethane foam.
2. Closed-cell polyethylene foam, nonabsorbent to liquid water and gas, nonoutgassing in unruptured state.
3. Proprietary, reticulated, closed-cell polymeric foam, nonoutgassing, with a density of 2.5 pcf and tensile strength of 35 psi per ASTM D 1623, and with water absorption less than 0.02 gms/cc per ASTM C 1083.
4. Equivalent to Nomaco's "Sof Rod".

C. Elastomeric Tubing Joint Fillers: Neoprene, butyl, EPDM, or silicone tubing complying with ASTM D 1056, nonabsorbent to water and gas, capable of remaining resilient at temperatures down to -26 deg F (-32 deg C). Provide products with low compression set and of size and shape to provide a secondary seal, to control sealant depth, and otherwise contribute to optimum sealant performance.

D. Bond-Breaker Tape: Polyethylene tape or other plastic tape recommended by sealant manufacturer for preventing sealant from adhering to rigid, inflexible joint-filler materials or joint surfaces at back of joint where such adhesion would result in sealant failure. Provide self-adhesive tape where applicable.

2.7 FIRE RESISTANT SEALERS

A. General: Provide manufacturer's standard fire stopping sealant with accessory materials, having fire-resistant ratings indicated as established, by the testing agency acceptable to authorities having jurisdiction.

1. Fire safing insulation to be used as a sealant back-up is specified in another Division 7 section.

B. Foamed in Place Fire Stopping Sealant: Two-part, foamed-in-place, silicone sealant formulated for use in a through penetration fire stop system for filling openings around cables, conduit, pipes, and similar penetrations through walls and floors.

C. Products: Subject to compliance with the requirements, provide one of the following:

1. Dow Corning Fire Stop Foam.
2. Pensil 851, General Electric.

2.8 MISCELLANEOUS MATERIALS

A. Primer: Material recommended by joint sealant manufacturer where required for adhesion of sealant to joint substrates indicated, as determined from preconstruction joint-sealant-substrate tests and field tests.

B. Cleaners for Nonporous Surfaces: Chemical cleaners acceptable to manufacturers of sealants and sealant backing materials, free of oily residues or other substances capable of staining or harming joint substrates and adjacent nonporous surfaces in any way, and formulated to promote optimum adhesion of sealants with joint substrates.

C. Masking Tape: Nonstaining, nonabsorbent material compatible with joint sealants and surfaces adjacent to joints.

PART 3 - EXECUTION

3.1 EXAMINATION

A. Examine joints indicated to receive joint sealants, with Installer present, for compliance with requirements for joint configuration, installation tolerances, and other conditions affecting joint-sealant performance. Do not proceed with installation of joint sealants until unsatisfactory conditions have been corrected.

3.2 PREPARATION

A. Surface Cleaning of Joints: Clean out joints immediately before installing joint sealants to comply with joint sealant manufacturer's written instructions and the following requirements:

1. Remove all foreign material from joint substrates that could interfere with adhesion of joint sealant, including dust, paints (except for permanent, protective coatings tested and approved for sealant adhesion and compatibility by sealant manufacturer), old joint sealants, oil, grease, waterproofing, water repellents, water, surface dirt, and frost.

2. Clean concrete, masonry, unglazed surfaces of ceramic tile, and similar porous joint substrate surfaces by brushing, grinding, blast cleaning, mechanical abrading, or a combination of these methods to produce a clean, sound substrate capable of developing optimum bond with joint sealants. Remove loose particles remaining from above cleaning operations by vacuuming or blowing out joints with oil-free compressed air.

3. Remove laitance and form-release agents from concrete.

4. Clean metal, glass, porcelain enamel, glazed surfaces of ceramic tile, and other nonporous surfaces with chemical cleaners or other means that do not stain, harm substrates, or leave residues capable of interfering with adhesion of joint sealants.

B. Joint Priming: Prime joint substrates where recommended in writing by joint sealant manufacturer, based on preconstruction joint-sealant-substrate tests or prior experience. Apply primer to comply with joint sealant

manufacturer's written instructions. Confine primers to areas of joint-sealant bond; do not allow spillage or migration onto adjoining surfaces.

C. Masking Tape: Use masking tape where required to prevent contact of sealant with adjoining surfaces that otherwise would be permanently stained or damaged by such contact or by cleaning methods required to remove sealant smears. Remove tape immediately after tooling without disturbing joint seal.

3.3 INSTALLATION OF JOINT SEALANTS

A. General: comply with joint sealant manufacturer's printed installation instructions applicable to products and applications indicated, except where more stringent requirements apply.

B. Sealant Installation Standard: Comply with recommendations of ASTM C 1193 for use of joint sealants as applicable to materials, applications, and conditions indicated.

C. Latex Sealant Standard: Comply with recommendations of ASTM C90 for use of latex sealants.

D. Acoustical Sealant Application Standard: Comply with recommendations of ASTM C 919 for use of joint sealants in acoustical applications as applicable to materials, applications, and conditions indicated.

E. Installation of Sealant Backings: Install sealant backings to comply with the following requirements:

1. Install joint fillers of type indicated to provide support of sealants during application and at position required to produce the cross-sectional shapes and depths of installed sealants relative to joint widths that allow optimum sealant movement capability.
2. Do not leave gaps between ends of joint fillers.
3. Do not stretch, twist, puncture, or tear joint fillers.
4. Remove absorbent joint fillers that have become wet before sealant application and replace them with dry material.
5. Install bond-breaker tape between sealants where backer rods are not used between sealants and joint fillers or back of joints.

F. Installation of Sealants: Install sealants by proven techniques that result in sealants directly contacting and fully wetting joint substrates, completely filling recesses provided for each joint configuration, and providing uniform, cross-sectional shapes and depths relative to joint widths that allow optimum sealant movement capability. Install sealants at the same time sealant backings are installed.

G. Tooling of Nonsag Sealants: Immediately after sealant application and prior to time skinning or curing begins, tool sealants to form smooth, uniform beads of configuration indicated, to eliminate air pockets, and to ensure contact and adhesion of sealant with sides of joint. Remove excess sealants from surfaces adjacent to joint. Do not use tooling agents that discolor sealants or adjacent surfaces or are not approved by sealant manufacturer.

1. Provide concave joint configuration per Figure 5A in ASTM C 1193, unless otherwise indicated.
2. Provide flush joint configuration, per Figure 5B in ASTM C 1193, where indicated.

   a. Use masking tape to protect adjacent surfaces of recessed tooled joints.

3. Provide recessed joint configuration, per Figure 5C in ASTM C1193, of recess depth and at locations indicated.

H. Installation of Preformed Foam Sealants: Install each length of sealant immediately after removing protective wrapping, taking care not to pull or stretch material, and to comply with sealant manufacturer's directions for installation methods, materials, and tools that produce seal continuity at ends, turns, and intersections of joints. For applications at low ambient temperatures where expansion of sealant requires acceleration to produce seal,

apply heat to sealant in conformance with sealant manufacturer's recommendations.

3.4 FOAMED IN PLACE FIRE STOPPING SEALANT

A. Install continuously around piping, conduit, wiring, joists, columns, etc. at penetrations through corridor partitions and fire rated partitions, walls, floors, and ceilings.

B. Provide fire rating required at penetrations through fire rated partitions, walls, and ceilings. Minimum fire rating shall be equal to the rating of the wall.

C. Install around irregularly shaped component passing through partitions, walls and ceilings requiring sealants where other sealant types will not adequately fill area.

3.5 CLEANING

A. Clean off excess sealant smears adjacent to joints as work progresses by methods and with cleaning materials approved by manufacturers of joint sealants and of products in which joints occur.

3.6 PROTECTION

A. Protect joint sealants during and after curing period from contact with contaminating substances and from damage resulting from construction operations or other causes so sealants are without deterioration or damage at time of Substantial Completion. If, despite such protection, damage or deterioration occurs, cut out and remove damaged or deteriorated joint sealants immediately so installations with repaired areas are indistinguishable from the original work.

END OF SECTION 079200

SECTION 079500 - EXPANSION CONTROL

PART 1 - GENERAL

1.1 RELATED DOCUMENTS

A. Drawings and general provisions of the Contract, including General and Supplementary Conditions and Division 01 Specification Sections, apply to this Section.

1.2 SUMMARY

A. Section Includes:

1. Interior expansion control systems.
2. Exterior wall expansion control systems.

B. Related Requirements:

1. Division 3 Section "Cast-In-Place Concrete" for cast-in anchorage and frames for expansion joints cover assemblies in concrete floors and walls.
2. Division 4 Section “Unit Masonry” for adjacent masonry wall systems.
3. Division 7 Section "Flashing and Sheet Metal" for sheet metal roof and wall expansion joint systems.
4. Division 7 Section "Roof Accessories" for curb-type expansion joints.
5. Division 7 Section "Joint Sealants" for elastomeric sealants and preformed foam sealants without metal frames.
6. Division 9 Sections for walls, partitions, ceilings, and floor finishes with expansion joints.

1.3 ACTION SUBMITTALS

A. Shop Drawings: For each expansion control system specified. Include plans, elevations, sections, details, splices, blockout requirement, attachments to other work, and line diagrams showing entire route of each expansion control system. Where expansion control systems change planes, provide isometric or clearly detailed drawing depicting how components interconnect.

B. Samples for Initial Selection: For each type of expansion control system indicated.

1. Include manufacturer's color charts showing the full range of colors and finishes available for each exposed metal and elastomeric seal material.

C. Product Schedule: Prepared by or under the supervision of the supplier. Include the following information in tabular form:

1. Manufacturer and model number for each expansion control system.
2. Expansion control system location cross-referenced to Drawings.
3. Nominal joint width.
4. Movement capability.
5. Classification as thermal or seismic.
6. Materials, colors, and finishes.
7. Product options.

8. Fire-resistance ratings.

PART 2 - PRODUCTS

2.1 SYSTEM DESCRIPTION

A. General: Provide expansion control systems of design, basic profile, materials, and operation indicated. Provide units with capability to accommodate variations in adjacent surfaces.

1. Furnish units in longest practicable lengths to minimize field splicing. Install with hairline mitered corners where expansion control systems change direction or abut other materials.
2. Include factory-fabricated closure materials and transition pieces, T-joints, corners, curbs, cross-connections, and other accessories as required to provide continuous expansion control systems.

B. Coordination: Coordinate installation of exterior wall expansion control systems with roof expansion control systems to ensure that wall transitions are watertight. Roof expansion joint assemblies are specified elsewhere.

2.2 PERFORMANCE REQUIREMENTS

A. Fire-Resistance Ratings: Where indicated, provide expansion control systems with fire barriers identical to those of systems tested for fire resistance per UL 2079 or ASTM E 1966 by a testing and inspecting agency acceptable to authorities having jurisdiction.

1. Hose Stream Test: Wall-to-wall and wall-to-ceiling systems shall be subjected to hose stream testing.

2.3 INTERIOR EXPANSION CONTROL SYSTEMS

A. Manufacturers: Subject to compliance with requirements, provide products by one of the following:

1. Basis of Design Manufacturer: MM Systems Corporation.
2. Balco, Inc.
3. Construction Specialties, Inc.

B. Source Limitations: Obtain expansion control systems from single source from single manufacturer.

C. Floor-to-Floor:

1. Basis-of-Design Product: MM Systems – Model HFX.
2. Design Criteria:

a. Nominal Joint Width: As indicated on Drawings

b. Fire-Resistance Rating: Provide expansion control system and fire-barrier assembly with a rating not less than 2 hours.

c. Metal: Aluminum.

1) Finish: Clear anodic, Class I.

D. Wall-to-Wall & Ceiling-to-Ceiling:

1. Basis-of-Design Product: MM Systems – Model FX-K
2. Design Criteria:

a. Nominal Joint Width: As indicated on Drawings.

b. Fire-Resistance Rating: Provide expansion control system and fire-barrier assembly with a rating not less than 2 hours.

c. Metal: Aluminum.

1) Finish: Clear anodic, Class I.

2.4 EXTERIOR WALL EXPANSION CONTROL SYSTEMS

A. Manufacturers: Subject to compliance with requirements, provide products by one of the following:

1. Basis of Design Manufacturer: MM Systems Corporation.
2. Balco, Inc.
3. Construction Specialties, Inc.

B. Source Limitations: Obtain expansion control systems from single source from single manufacturer.

C. Wall-to-Wall:

1. Basis-of-Design Product: MM Systems: ESS Series.
2. Design Criteria:

a. Nominal Joint Width: As indicated on Drawings.

b. Fire-Resistance Rating: Provide expansion control system and fire-barrier assembly with a rating not less than 2 hours.

c. Silicone Joint – Color to be selected by architect from manufacturer’s standard and custom colors.

2.5 MATERIALS

A. Aluminum: ASTM B 221 (ASTM B 221M), Alloy 6063-T5 for extrusions; ASTM B 209 (ASTM B 209M), Alloy 6061-T6 for sheet and plate.

1. Apply manufacturer's standard protective coating on aluminum surfaces to be placed in contact with cementitious materials.

B. Elastomeric Seals: ASTM E 1783; preformed elastomeric membranes or extrusions to be installed in metal frames.

C. Compression Seals: ASTM E 1612; preformed elastomeric extrusions having an internal baffle system and designed to function under compression.

D. Cellular Foam Seals: Extruded, compressible foam designed to function under compression.

E. Fire Barriers: Any material or material combination, when fire tested after cycling, designated to resist the passage of flame and hot gases through a movement joint and to meet performance criteria for required fire-resistance rating.

F. Nonmetallic, Shrinkage-Resistant Grout: ASTM C 1107/C 1107M, factory-packaged, nonmetallic aggregate grout, noncorrosive, nonstaining, mixed with water to consistency suitable for application and a 30-minute working time.

G. Accessories: Manufacturer's standard anchors, clips, fasteners, set screws, spacers, and other accessories compatible with material in contact, as indicated or required for complete installations.

2.6 GENERAL FINISH REQUIREMENTS

A. Comply with NAAMM's "Metal Finishes Manual for Architectural and Metal Products" for recommendations for applying and designating finishes.

B. Protect mechanical finishes on exposed surfaces from damage by applying a strippable, temporary protective covering before shipping.

C. Appearance of Finished Work: Noticeable variations in same piece are not acceptable. Variations in appearance of adjoining components are acceptable if they are within the range of approved Samples and are assembled or installed to minimize contrast.

2.7 ALUMINUM FINISHES

A. Mill finish.

B. Clear Anodic Finish: AAMA 611, AA-M12C22A41, Class I, 0.018 mm or thicker.

PART 3 - EXECUTION

3.1 EXAMINATION

A. Examine surfaces where expansion control systems will be installed for installation tolerances and other conditions affecting performance of work.

1. Proceed with installation only after unsatisfactory conditions have been corrected.

3.2 PREPARATION

A. Prepare substrates according to expansion control system manufacturer's written instructions.

B. Coordinate and furnish anchorages, setting drawings, and instructions for installing expansion control systems. Provide fasteners of metal, type, and size to suit type of construction indicated and to provide for secure attachment of expansion control systems.

C. Cast-In Frames: Coordinate and furnish frames to be cast into concrete.

3.3 INSTALLATION

A. Comply with manufacturer's written instructions for storing, handling, and installing expansion control systems and materials unless more stringent requirements are indicated.

B. Metal Frames: Perform cutting, drilling, and fitting required to install expansion control systems.

1. Install in true alignment and proper relationship to joints and adjoining finished surfaces measured from established lines and levels.
2. Adjust for differences between actual structural gap and nominal design gap due to ambient temperature at time of installation. Notify Architect where discrepancies occur that will affect proper expansion control system installation and performance.
3. Cut and fit ends to accommodate thermal expansion and contraction of metal without buckling of frames.
4. Repair or grout blockout as required for continuous frame support using nonmetallic, shrinkage-resistant grout.
5. Install frames in continuous contact with adjacent surfaces.

    a. Shimming is not permitted.

6. Locate anchors at interval recommended by manufacturer, but not less than 3 inches (75 mm) from each end and not more than 24 inches (600 mm) o.c.

C. Seals in Metal Frames: Install elastomeric seals and membranes in frames to comply with manufacturer's written instructions. Install with minimum number of end joints.

1. Provide in continuous lengths for straight sections.
2. Seal transitions according to manufacturer's written instructions. Vulcanize or heat-weld field-spliced joints as recommended by manufacturer.
3. Installation: Mechanically lock seals into frames or adhere to frames with adhesive or pressure-sensitive tape as recommended by manufacturer.

D. Compression Seals: Apply adhesive or lubricant adhesive as recommended by manufacturer to both frame interfaces and/or sides of slabs before installing compression seals.

E. Foam Seals: Install with adhesive recommended by manufacturer.

F. Epoxy-Bonded Seals: Pressurize seal for time period and to pressure recommended by manufacturer. Do not overpressurize.

G. Terminate exposed ends of expansion control systems with field- or factory-fabricated termination devices.

H. Fire-Resistance-Rated Assemblies: Coordinate installation of expansion control system materials and associated work so complete assemblies comply with assembly performance requirements.

1. Fire Barriers: Install fire barriers to provide continuous, uninterrupted fire resistance throughout length of joint, including transitions and field splices.

3.4 PROTECTION

A. Do not remove protective covering until finish work in adjacent areas is complete. When protective covering is removed, clean exposed metal surfaces to comply with manufacturer's written instructions.

B. Protect the installation from damage by work of other Sections. Where necessary due to heavy construction traffic, remove and properly store cover plates or seals and install temporary protection over expansion control systems. Reinstall cover plates or seals prior to Substantial Completion of the Work.

END OF SECTION 079500

SECTION 081113 - HOLLOW METAL DOORS AND FRAMES

PART 1 - GENERAL

1.1 RELATED DOCUMENTS

A. Drawings and general provisions of the Contract, including General and Supplementary Conditions and Division 01 Specification Sections, apply to this Section.

1.2 SUMMARY

A. Section includes hollow-metal work.

B. Related Requirements:

1. Section 087100 "Door Hardware" for door hardware for hollow-metal doors.

1.3 DEFINITIONS

A. Minimum Thickness: Minimum thickness of base metal without coatings according to NAAMM-HMMA 803 or SDI A250.8.

1.4 COORDINATION

A. Coordinate anchorage installation for hollow-metal frames. Furnish setting drawings, templates, and directions for installing anchorages, including sleeves, concrete inserts, anchor bolts, and items with integral anchors. Deliver such items to Project site in time for installation.

1.5 ACTION SUBMITTALS

A. Product Data: For each type of product.

1. Include construction details, material descriptions, core descriptions, fire-resistance ratings, temperature-rise ratings, and finishes.

B. Shop Drawings: Include the following:

1. Elevations of each door type.
2. Details of doors, including vertical- and horizontal-edge details and metal thicknesses.
3. Frame details for each frame type, including dimensioned profiles and metal thicknesses.
4. Locations of reinforcement and preparations for hardware.
5. Details of each different wall opening condition.
6. Details of anchorages, joints, field splices, and connections.
7. Details of accessories.
8. Details of moldings, removable stops, and glazing.
9. Details of conduit and preparations for power, signal, and control systems.

C. Schedule: Provide a schedule of hollow-metal work prepared by or under the supervision of supplier, using same reference numbers for details and openings as those on Drawings. Coordinate with final Door Hardware Schedule.

1.6 DELIVERY, STORAGE, AND HANDLING

A. Deliver hollow-metal work palletized, packaged, or crated to provide protection during transit and Project-site storage. Do not use non-vented plastic.

B. Deliver welded frames with two removable spreader bars across bottom of frames, tack welded to jambs and mullions.

C. Store hollow-metal work vertically under cover at Project site with head up. Place on minimum 4-inch-(102-mm-) high wood blocking. Provide minimum 1/4-inch (6-mm) space between each stacked door to permit air circulation.

PART 2 - PRODUCTS

2.1 MANUFACTURERS

A. Manufacturers: Subject to compliance with requirements, provide products by one of the following:

1. Amweld International, LLC.
2. Ceco Door Products; an Assa Abloy Group company.
3. Curries Company; an Assa Abloy Group company.
4. Steelcraft; an Ingersoll-Rand company.

B. Source Limitations: Obtain hollow-metal work from single source from single manufacturer.

2.2 REGULATORY REQUIREMENTS

A. Fire-Rated Assemblies: Complying with NFPA 80 and listed and labeled by a qualified testing agency acceptable to authorities having jurisdiction for fire-protection ratings and temperature-rise limits indicated, based on testing at positive pressure according to NFPA 252 or UL 10C.

1. Smoke- and Draft-Control Assemblies: Provide an assembly with gaskets listed and labeled for smoke and draft control by a qualified testing agency acceptable to authorities having jurisdiction, based on testing according to UL 1784 and installed in compliance with NFPA 105.

B. Fire-Rated, Borrowed-Light Assemblies: Complying with NFPA 80 and listed and labeled by a testing and inspecting agency acceptable to authorities having jurisdiction for fire-protection ratings indicated, based on testing according to NFPA 257 or UL 9.

2.3 INTERIOR DOORS AND FRAMES

A. Construct interior doors and frames to comply with the standards indicated for materials, fabrication, hardware locations, hardware reinforcement, tolerances, and clearances, and as specified.

B. Heavy-Duty Doors and Frames: SDI A250.8, Level 2. At locations indicated in the Door and Frame Schedule.

1. Physical Performance: Level B according to SDI A250.4.
2. Doors:

    a. Type: As indicated in the Door and Frame Schedule.
    b. Thickness: 1-3/4 inches (44.5 mm).
    c. Face: Cold-rolled steel sheet, minimum thickness of 0.042 inch (1.0 mm).
    d. Edge Construction: Model 2, Seamless.
    e. Core: Manufacturer's standard kraft-paper honeycomb, polystyrene, polyurethane, polyisocyanurate, mineral-board, or vertical steel-stiffener core at manufacturer's discretion.

3. Frames:

    a. Materials: Cold-rolled steel sheet, minimum thickness of 0.053 inch (1.3 mm).

4. Exposed Finish: Prime.

2.4 EXTERIOR HOLLOW-METAL DOORS AND FRAMES

A. Construct exterior doors and frames to comply with the standards indicated for materials, fabrication, hardware locations, hardware reinforcement, tolerances, and clearances, and as specified.

B. Extra-Heavy-Duty Doors and Frames: SDI A250.8, Level 3. At locations indicated in the Door and Frame Schedule.

1. Physical Performance: Level A according to SDI A250.4.
2. Doors:

    a. Type: As indicated in the Door and Frame Schedule.
    b. Thickness: 1-3/4 inches (44.5 mm.)
    c. Face: Metallic-coated steel sheet, minimum thickness of 0.053 inch (1.3 mm), with minimum A40 (ZF120) coating.
    d. Edge Construction: Model 2, Seamless.
    e. Core: Manufacturer's standard kraft-paper honeycomb, polystyrene, polyurethane, polyisocyanurate, mineral-board, or vertical steel-stiffener core fabricated as thermal-assemblies with a minimum R-value 11 or better.

3. Frames:

    a. Materials: Metallic-coated steel sheet, minimum thickness of 0.053 inch (1.3 mm), with minimum A40 (ZF120) coating.
    b. Construction: Full profile welded.

4. Exposed Finish: Prime.

2.5 FRAME ANCHORS

A. Jamb Anchors:

1. Masonry Type: Adjustable strap-and-stirrup or T-shaped anchors to suit frame size, not less than 0.042 inch (1.0 mm) thick, with corrugated or perforated straps not less than 2 inches (51 mm) wide by 10 inches (254 mm) long; or wire anchors not less than 0.177 inch (4.5 mm) thick.

2. Stud-Wall Type: Designed to engage stud, welded to back of frames; not less than 0.042 inch (1.0 mm) thick.
3. Compression Type for Drywall Slip-on Frames: Adjustable compression anchors.

B. Floor Anchors: Formed from same material as frames, minimum thickness of 0.042 inch (1.0 mm), and as follows:

1. Monolithic Concrete Slabs: Clip-type anchors, with two holes to receive fasteners.

2.6 MATERIALS

A. Cold-Rolled Steel Sheet: ASTM A 1008/A 1008M, Commercial Steel (CS), Type B; suitable for exposed applications.

B. Metallic-Coated Steel Sheet: ASTM A 653/A 653M, Commercial Steel (CS), Type B.

C. Frame Anchors: ASTM A 879/A 879M, Commercial Steel (CS), 04Z (12G) coating designation; mill phosphatized.

1. For anchors built into exterior walls, steel sheet complying with ASTM A 1008/A 1008M or ASTM A 1011/A 1011M, hot-dip galvanized according to ASTM A 153/A 153M, Class B.

D. Inserts, Bolts, and Fasteners: Hot-dip galvanized according to ASTM A 153/A 153M.

E. Grout: ASTM C 476, except with a maximum slump of 4 inches (102 mm), as measured according to ASTM C 143/C 143M.

F. Mineral-Fiber Insulation: ASTM C 665, Type I (blankets without membrane facing); consisting of fibers manufactured from slag or rock wool; with maximum flame-spread and smoke-developed indexes of 25 and 50, respectively; passing ASTM E 136 for combustion characteristics.

G. Glazing: Comply with requirements in Section 088000 "Glazing."

H. Bituminous Coating: Cold-applied asphalt mastic, compounded for 15-mil (0.4-mm) dry film thickness per coat. Provide inert-type noncorrosive compound free of asbestos fibers, sulfur components, and other deleterious impurities.

2.7 FABRICATION

A. Fabricate hollow-metal work to be rigid and free of defects, warp, or buckle. Accurately form metal to required sizes and profiles, with minimum radius for metal thickness. Where practical, fit and assemble units in manufacturer's plant. To ensure proper assembly at Project site, clearly identify work that cannot be permanently factory assembled before shipment.

B. Hollow-Metal Doors:

1. Steel-Stiffened Door Cores: Provide minimum thickness 0.026 inch (0.66 mm), steel vertical stiffeners of same material as face sheets extending full-door height, with vertical webs spaced not more than 6 inches (152 mm) apart. Spot weld to face sheets no more than 5 inches (127 mm) o.c. Fill spaces between stiffeners with glass- or mineral-fiber insulation.
2. Fire Door Cores: As required to provide fire-protection and temperature-rise ratings indicated.
3. Vertical Edges for Single-Acting Doors: Bevel edges 1/8 inch in 2 inches.
4. Top Edge Closures: Close top edges of doors with flush closures of same material as face sheets.

5. Bottom Edge Closures: Close bottom edges of doors with end closures or channels of same material as face sheets.
6. Exterior Doors: Provide weep-hole openings in bottoms of exterior doors to permit moisture to escape. Seal joints in top edges of doors against water penetration.
7. Astragals: Provide overlapping astragal on one leaf of pairs of doors where required by NFPA 80 for fire-performance rating or where indicated. Extend minimum 3/4 inch (19 mm) beyond edge of door on which astragal is mounted or as required to comply with published listing of qualified testing agency.

C. Hollow-Metal Frames: Where frames are fabricated in sections due to shipping or handling limitations, provide alignment plates or angles at each joint, fabricated of same thickness metal as frames.

1. Frames: Provide closed tubular members with no visible face seams or joints, fabricated from same material as door frame. Fasten members at crossings and to jambs by butt welding.
2. Grout Guards: Weld guards to frame at back of hardware mortises in frames to be grouted.
3. Floor Anchors: Weld anchors to bottoms of jambs with at least four spot welds per anchor; however, for slip-on drywall frames, provide anchor clips or countersunk holes at bottoms of jambs.
4. Jamb Anchors: Provide number and spacing of anchors as follows:

   a. Masonry Type: Locate anchors not more than 16 inches (406 mm) from top and bottom of frame. Space anchors not more than 32 inches (813 mm) o.c., to match coursing, and as follows:

      1) Two anchors per jamb up to 60 inches (1524 mm) high.
      2) Three anchors per jamb from 60 to 90 inches (1524 to 2286 mm) high.
      3) Four anchors per jamb from 90 to 120 inches (2286 to 3048 mm) high.
      4) Four anchors per jamb plus one additional anchor per jamb for each 24 inches (610 mm) or fraction thereof above 120 inches (3048 mm) high.

   b. Stud-Wall Type: Locate anchors not more than 18 inches (457 mm) from top and bottom of frame. Space anchors not more than 32 inches (813 mm) o.c. and as follows:

      1) Three anchors per jamb up to 60 inches (1524 mm) high.
      2) Four anchors per jamb from 60 to 90 inches (1524 to 2286 mm) high.
      3) Five anchors per jamb from 90 to 96 inches (2286 to 2438 mm) high.
      4) Five anchors per jamb plus one additional anchor per jamb for each 24 inches (610 mm) or fraction thereof above 96 inches (2438 mm) high.

   c. Compression Type: Not less than two anchors in each frame.

5. Head Anchors: Two anchors per head for frames more than 42 inches (1067 mm) wide and mounted in metal-stud partitions.
6. Door Silencers: Except on weather-stripped frames, drill stops to receive door silencers as follows. Keep holes clear during construction.

   a. Single-Door Frames: Drill stop in strike jamb to receive three door silencers.
   b. Double-Door Frames: Drill stop in head jamb to receive two door silencers.

D. Fabricate concealed stiffeners and edge channels from either cold- or hot-rolled steel sheet.

E. Hardware Preparation: Factory prepare hollow-metal work to receive templated mortised hardware; include cutouts, reinforcement, mortising, drilling, and tapping according to SDI A250.6, the Door Hardware Schedule, and templates.

1. Reinforce doors and frames to receive nontemplated, mortised, and surface-mounted door hardware.
2. Comply with applicable requirements in SDI A250.6 and BHMA A156.115 for preparation of hollow-metal work for hardware.

F. Stops and Moldings: Provide stops and moldings around glazed lites and louvers where indicated. Form corners of stops and moldings with mitered hairline joints.

1. Single Glazed Lites: Provide fixed stops and moldings welded on secure side of hollow-metal work.
2. Multiple Glazed Lites: Provide fixed and removable stops and moldings so that each glazed lite is capable of being removed independently.
3. Provide fixed frame moldings on outside of exterior and on secure side of interior doors and frames.
4. Provide loose stops and moldings on inside of hollow-metal work.
5. Coordinate rabbet width between fixed and removable stops with glazing and installation types indicated.

2.8 STEEL FINISHES

A. Prime Finish: Clean, pretreat, and apply manufacturer's standard primer.

1. Shop Primer: Manufacturer's standard, fast-curing, lead- and chromate-free primer complying with SDI A250.10; recommended by primer manufacturer for substrate; compatible with substrate and field-applied coatings despite prolonged exposure.

2.9 ACCESSORIES

A. Mullions and Transom Bars: Join to adjacent members by welding or rigid mechanical anchors.

B. Grout Guards: Formed from same material as frames, not less than 0.016 inch (0.4 mm) thick.

PART 3 - EXECUTION

3.1 EXAMINATION

A. Examine substrates, areas, and conditions, with Installer present, for compliance with requirements for installation tolerances and other conditions affecting performance of the Work.

B. Examine roughing-in for embedded and built-in anchors to verify actual locations before frame installation.

C. Prepare written report, endorsed by Installer, listing conditions detrimental to performance of the Work.

D. Proceed with installation only after unsatisfactory conditions have been corrected.

3.2 PREPARATION

A. Remove welded-in shipping spreaders installed at factory. Restore exposed finish by grinding, filling, and dressing, as required to make repaired area smooth, flush, and invisible on exposed faces.

B. Drill and tap doors and frames to receive nontemplated, mortised, and surface-mounted door hardware.

3.3 INSTALLATION

A. General: Install hollow-metal work plumb, rigid, properly aligned, and securely fastened in place. Comply with Drawings and manufacturer's written instructions.

B. Hollow-Metal Frames: Install hollow-metal frames of size and profile indicated. Comply with SDI A250.11 or NAAMM-HMMA 840 as required by standards specified.

1. Set frames accurately in position; plumbed, aligned, and braced securely until permanent anchors are set. After wall construction is complete, remove temporary braces, leaving surfaces smooth and undamaged.

    a. At fire-rated openings, install frames according to NFPA 80.
    b. Where frames are fabricated in sections because of shipping or handling limitations, field splice at approved locations by welding face joint continuously; grind, fill, dress, and make splice smooth, flush, and invisible on exposed faces.
    c. Install frames with removable stops located on secure side of opening.
    d. Install door silencers in frames before grouting.
    e. Remove temporary braces necessary for installation only after frames have been properly set and secured.
    f. Check plumb, square, and twist of frames as walls are constructed. Shim as necessary to comply with installation tolerances.
    g. Field apply bituminous coating to backs of frames that will be filled with grout containing antifreezing agents.

2. Floor Anchors: Provide floor anchors for each jamb and mullion that extends to floor, and secure with postinstalled expansion anchors.

    a. Floor anchors may be set with power-actuated fasteners instead of postinstalled expansion anchors if so indicated and approved on Shop Drawings.

3. Metal-Stud Partitions: Solidly pack mineral-fiber insulation inside frames.
4. Masonry Walls: Coordinate installation of frames to allow for solidly filling space between frames and masonry with grout.
5. Installation Tolerances: Adjust hollow-metal door frames for squareness, alignment, twist, and plumb to the following tolerances:

    a. Squareness: Plus or minus 1/16 inch (1.6 mm), measured at door rabbet on a line 90 degrees from jamb perpendicular to frame head.
    b. Alignment: Plus or minus 1/16 inch (1.6 mm), measured at jambs on a horizontal line parallel to plane of wall.
    c. Twist: Plus or minus 1/16 inch (1.6 mm), measured at opposite face corners of jambs on parallel lines, and perpendicular to plane of wall.
    d. Plumbness: Plus or minus 1/16 inch (1.6 mm), measured at jambs at floor.

C. Hollow-Metal Doors: Fit hollow-metal doors accurately in frames, within clearances specified below. Shim as necessary.

1. Non-Fire-Rated Steel Doors:

    a. Between Door and Frame Jambs and Head: 1/8 inch (3.2 mm) plus or minus 1/32 inch (0.8 mm).

b. Between Edges of Pairs of Doors: 1/8 inch (3.2 mm) to 1/4 inch (6.3 mm) plus or minus 1/32 inch (0.8 mm).
c. At Bottom of Door: [**3/4 inch (19.1 mm)**] [**5/8 inch (15.8 mm)**] plus or minus 1/32 inch (0.8 mm).
d. Between Door Face and Stop: 1/16 inch (1.6 mm) to 1/8 inch (3.2 mm) plus or minus 1/32 inch (0.8 mm).

2. Fire-Rated Doors: Install doors with clearances according to NFPA 80.
3. Smoke-Control Doors: Install doors and gaskets according to NFPA 105.

D. Glazing: Comply with installation requirements in Section 088000 "Glazing" and with hollow-metal manufacturer's written instructions.

1. Secure stops with countersunk flat- or oval-head machine screws spaced uniformly not more than 9 inches (230 mm) o.c. and not more than 2 inches (51 mm) o.c. from each corner.

3.4 ADJUSTING AND CLEANING

A. Final Adjustments: Check and readjust operating hardware items immediately before final inspection. Leave work in complete and proper operating condition. Remove and replace defective work, including hollow-metal work that is warped, bowed, or otherwise unacceptable.

B. Remove grout and other bonding material from hollow-metal work immediately after installation.

C. Prime-Coat Touchup: Immediately after erection, sand smooth rusted or damaged areas of prime coat and apply touchup of compatible air-drying, rust-inhibitive primer.

D. Metallic-Coated Surface Touchup: Clean abraded areas and repair with galvanizing repair paint according to manufacturer's written instructions.

E. Touchup Painting: Cleaning and touchup painting of abraded areas of paint are specified in painting Sections.

END OF SECTION 081113

SECTION 081416 - FLUSH WOOD DOORS

PART 1 - GENERAL

1.1 RELATED DOCUMENTS

A. Drawings and general provisions of the Contract, including General and Supplementary Conditions and Division 01 Specification Sections, apply to this Section.

1.2 SUMMARY

A. Section Includes:

1. Solid-core doors with wood-veneer faces.
2. Factory finishing flush wood doors.
3. Factory fitting flush wood doors to frames and factory machining for hardware.

B. Related Requirements:

1. Section 081113 "Hollow Metal Doors and Frames"
2. Section 087100 “Door Hardware”
3. Section 088000 "Glazing" for glass view panels in flush wood doors.

1.3 ACTION SUBMITTALS

A. Product Data: For each type of door. Include details of core and edge construction and trim for openings. Include factory-finishing specifications.

B. Shop Drawings: Indicate location, size, and hand of each door; elevation of each kind of door; construction details not covered in Product Data; and the following:

1. Dimensions and locations of blocking.
2. Dimensions and locations of mortises and holes for hardware.
3. Dimensions and locations of cutouts.
4. Undercuts.
5. Requirements for veneer matching.
6. Doors to be factory finished and finish requirements.
7. Fire-protection ratings for fire-rated doors.

C. Samples for Initial Selection: For factory-finished doors.

D. Samples for Verification:

1. Factory finishes applied to actual door face materials, approximately 8 by 10 inches (200 by 250 mm), for each material and finish**.** For each wood species and transparent finish, provide set of three Samples showing typical range of color and grain to be expected in finished Work.
2. Louver blade and frame sections, 6 inches (150 mm) long, for each material and finish specified.

1.4 QUALITY ASSURANCE

A. Manufacturer Qualifications: A qualified manufacturer that is a certified participant in AWI's Quality Certification Program.

B. Obtain doors from a single manufacturer to ensure uniformity in quality of appearance and construction. All material supplied for this project to conform to the AWI Sections 200 and 1300 for premium grade wood doors.

1.5 DELIVERY, STORAGE, AND HANDLING

A. Comply with requirements of referenced standard and manufacturer's written instructions.

B. Protect doors during transit, storage and handling to help prevent damage, soiling and deterioration.

C. Mark each door on bottom rail with opening number used on Shop Drawings.

1.6 FIELD CONDITIONS

A. Environmental Limitations: Do not deliver or install doors until spaces are enclosed and weathertight, wet work in spaces is complete and dry, and HVAC system is operating and maintaining ambient temperature and humidity conditions at occupancy levels during remainder of construction period.

1.7 WARRANTY

A. A. Special Warranty: Manufacturer agrees to repair or replace doors that fail in materials or workmanship within specified warranty period.

1. Failures include, but are not limited to, the following:

a. Warping (bow, cup, or twist) more than 1/4 inch (6.4 mm) in a 42-by-84-inch (1067-by-2134-mm) section.
b. Telegraphing of core construction in face veneers exceeding 0.01 inch in a 3-inch (0.25 mm in a 76.2-mm) span.

2. Warranty shall also include installation and finishing that may be required due to repair or replacement of defective doors.
3. Warranty Period for Solid-Core Interior Doors: Life of installation.

PART 2 - PRODUCTS

2.1 MANUFACTURERS

A. Manufacturers: Subject to compliance with requirements, provide products by one of the following:

1. Algoma Hardwoods, Inc.
2. Eggers Industries.
3. Graham Wood Doors; an Assa Abloy Group company.
4. Marshfield Door Systems, Inc.
5. VT Industries, Inc.

2.2 FLUSH WOOD DOORS, GENERAL

A. Quality Standard: In addition to requirements specified, comply with AWI's, AWMAC's, and WI's "Architectural Woodwork Standards

1. Provide AWI Quality Certification Labels indicating that doors comply with requirements of grades specified.
2. Contract Documents contain selections chosen from options in quality standard and additional requirements beyond those of quality standard. Comply with those selections and requirements in addition to quality standard.

B. WDMA I.S.1-A Performance Grade: Extra Heavy Duty

C. Fire-Rated Wood Doors: Doors complying with NFPA 80 that are listed and labeled by a qualified testing agency, for fire-protection ratings indicated, based on testing at positive pressure according to NFPA 252 and UL 10C.

1. Cores: Provide core specified or mineral core as needed to provide fire-protection rating indicated.
2. Edge Construction: Provide edge construction with intumescent seals concealed by outer stile. Comply with specified requirements for exposed edges.
3. Pairs: Provide fire-retardant stiles that are listed and labeled for applications indicated without formed-steel edges and astragals. Provide stiles with concealed intumescent seals. Comply with specified requirements for exposed edges.
4. Pairs: Provide formed-steel edges and astragals with intumescent seals.
   a. Finish steel edges and astragals to match door hardware (locksets or exit devices).

D. Smoke- and Draft-Control Door Assemblies: Listed and labeled for smoke and draft control, based on testing according to UL 1784.

E. Particleboard-Core Doors:

1. Particleboard: ANSI A208.1, Grade LD-2, made with binder containing no urea-formaldehyde.
2. Blocking: Provide wood blocking in particleboard-core doors as follows:

   a. 5-inch (125-mm) top-rail blocking, in doors indicated to have closers. Closers to be mounted with thru-bolts.
   b. 5-inch (125-mm) bottom-rail blocking, in exterior doors and doors indicated to have kick, mop, or armor plates.
   c. 5-inch (125-mm) midrail blocking, in doors indicated to have exit devices. Exit devices to be mounted with thru-bolts.

3. Provide doors with structural-composite-lumber cores instead of particleboard cores for doors indicated to receive exit devices.

F. Structural-Composite-Lumber-Core Doors:

1. Structural Composite Lumber: WDMA I.S.10.

   a. Screw Withdrawal, Face: 700 lbf (3100 N).
   b. Screw Withdrawal, Edge: 400 lbf (1780 N).

G. Mineral-Core Doors:

1. Core: Noncombustible mineral product complying with requirements of referenced quality standard and testing and inspecting agency for fire-protection rating indicated.

2. Blocking: Provide composite blocking with improved screw-holding capability approved for use in doors of fire-protection ratings indicated as follows:

   a. 5-inch (125-mm) top-rail blocking, in doors indicated to have closers. Closers to be mounted with thru-bolts.
   b. 5-inch (125-mm) bottom-rail blocking, in doors indicated to have protection plates.
   c. 5-inch (125-mm) midrail blocking, in doors indicated to have exit devices. Exit devices to be mounted with thru-bolts.

3. Edge Construction: At hinge stiles, provide laminated-edge construction with improved screw-holding capability and split resistance. Comply with specified requirements for exposed edges.

   a. Screw-Holding Capability: 550 lbf (2440 N) per WDMA T.M.-10.

2.3 VENEER-FACED DOORS FOR TRANSPARENT FINISH

A. Interior Solid-Core Doors (SCWD)

1. Grade: Premium, with Grade A faces.
2. Species: Cherry
3. Cut: Plain sliced (flat sliced).
4. Match between Veneer Leaves: Slip match.
5. Assembly of Veneer Leaves on Door Faces: Balance match.
6. Pair and Set Match: Provide for doors hung in same opening or separated only by mullions.
7. Room Match: Match door faces within each separate room or area of building. Corridor-door faces do not need to match where they are separated by 20 feet or more.
8. Exposed Vertical and Top Edges: Same species as faces - edge Type A
9. Core: As required to meet performance requirements listed above.
10. Construction: Five or seven plies. Stiles and rails are bonded to core, then entire unit is abrasive planed before veneering.
11. WDMA I.S.1-A Performance Grade: Heavy Duty.

2.4 LIGHT FRAMES AND LOUVERS

A. Wood Beads for Light Openings in Wood Doors: Provide manufacturer's standard wood beads unless otherwise indicated.

1. Wood Species: Same species as door faces.
2. Profile: Flush rectangular beads
3. At wood-core doors with 20-minute fire-protection ratings, provide wood beads and metal glazing clips approved for such use.

B. Wood-Veneered Beads for Light Openings in Fire-Rated Doors: Manufacturer's standard wood-veneered noncombustible beads matching veneer species of door faces and approved for use in doors of fire-protection rating indicated. Include concealed metal glazing clips where required for opening size and fire-protection rating indicated.

C. Wood Louvers: Door manufacturer's standard solid-wood louvers unless otherwise indicated.

1. Wood Species: Same species as door faces.

2.5 FABRICATION

A. Factory fit doors to suit frame-opening sizes indicated. Comply with clearance requirements of referenced quality standard for fitting unless otherwise indicated.

1. Comply with NFPA 80 requirements for fire-rated doors.

B. Factory machine doors for hardware that is not surface applied. Locate hardware to comply with DHI-WDHS-3. Comply with final hardware schedules, door frame Shop Drawings, BHMA-156.115-W, and hardware templates.

1. Coordinate with hardware mortises in metal frames to verify dimensions and alignment before factory machining.
2. Metal Astragals: Factory machine astragals and formed-steel edges for hardware for pairs of fire-rated doors.

C. Openings: Factory cut and trim openings through doors.

1. Light Openings: Trim openings with moldings of material and profile indicated.
2. Glazing: Factory install glazing in doors indicated to be factory finished. Comply with applicable requirements in Section 088000 "Glazing."
3. Louvers: Factory install louvers in prepared openings.

2.6 FACTORY FINISHING

A. General: Comply with referenced quality standard for factory finishing. Complete fabrication, including fitting doors for openings and machining for hardware that is not surface applied, before finishing.

1. Finish faces, all four edges, edges of cutouts, and mortises. Stains and fillers may be omitted on bottom edges, edges of cutouts, and mortises.

B. Factory finish doors that are indicated to receive transparent finish.

C. Use only paints and coatings that comply with the testing and product requirements of the California Department of Health Services' "Standard Practice for the Testing of Volatile Organic Emissions from Various Sources Using Small-Scale Environmental Chambers."

D. Transparent Finish:

1. Grade: Premium.
2. Finish: AWI's, AWMAC's, and WI's "Architectural Woodwork Standards" System 5, conversion varnish.
3. Staining: As selected by Architect from manufacturer's full range.
4. Effect: Filled finish
5. Sheen: Satin.

PART 3 - EXECUTION

3.1 EXAMINATION

A. Examine doors and installed door frames, with Installer present, before hanging doors.

1. Verify that installed frames comply with indicated requirements for type, size, location, and swing characteristics and have been installed with level heads and plumb jambs.
2. Reject doors with defects.

B. Proceed with installation only after unsatisfactory conditions have been corrected.

3.2 INSTALLATION

A. Hardware: For installation, see Section 087100 "Door Hardware."

B. Installation Instructions: Install doors to comply with manufacturer's written instructions and referenced quality standard, and as indicated.

1. Install fire-rated doors according to NFPA 80.
2. Install smoke- and draft-control doors according to NFPA 105.

C. Factory-Fitted Doors: Align in frames for uniform clearance at each edge.

D. Factory-Finished Doors: Restore finish before installation if fitting or machining is required at Project site.

3.3 ADJUSTING

A. Operation: Rehang or replace doors that do not swing or operate freely.

B. Finished Doors: Replace doors that are damaged or that do not comply with requirements. Doors may be repaired or refinished if Work complies with requirements and shows no evidence of repair or refinishing.

END OF SECTION 081416

SECTION 083113 - ACCESS DOORS AND FRAMES

PART 1 - GENERAL

1.1 RELATED DOCUMENTS

A. Drawings and general provisions of the Contract, including General and Supplementary Conditions and Division 01 Specification Sections, apply to this Section.

1.2 SUMMARY

A. Section Includes:

1. Access doors and frames for walls and ceilings.

B. Related Requirements:

1. Division 04 Section "Unit Masonry" for anchoring and grouting access door frames set in masonry construction.
2. Division 07 Section "Roof Accessories" for roof hatches.
3. Division 08 Section "Door Hardware" for mortise or rim cylinder locks and master keying.
4. Division 09 Section "Acoustical Tile Ceilings" for suspended acoustical tile ceilings.
5. Division 23 Section "Common Work Results for HVAC" for heating and air-conditioning equipment access doors.

1.3 ACTION SUBMITTALS

A. Product Data: For each type of product.

1. Include construction details, fire ratings, materials, individual components and profiles, and finishes.

B. Shop Drawings:

1. Include plans, elevations, sections, details, and attachments to other work.
2. Detail fabrication and installation of access doors and frames for each type of substrate.

C. Samples: For each door face material, at least 3 by 5 inches (75 by 125 mm) in size, in specified finish.

D. Product Schedule: Provide complete access door and frame schedule, including types, locations, sizes, latching or locking provisions, and other data pertinent to installation.

a. Verification: Determine specific locations and sizes for access doors needed to gain access to concealed plumbing, mechanical, or other concealed work, and indicate in the schedule specified in "Submittals" Article.

PART 2 - PRODUCTS

2.1 PERFORMANCE REQUIREMENTS

A. Fire-Rated Access Doors and Frames: Units complying with NFPA 80 that are identical to access door and frame assemblies tested for fire-test-response characteristics according to the following test method and that are listed and labeled by UL or another testing and inspecting agency acceptable to authorities having jurisdiction:

1. NFPA 252 or UL 10B for fire-rated access door assemblies installed vertically.
2. NFPA 288 for fire-rated access door assemblies installed horizontally.

2.2 ACCESS DOORS AND FRAMES FOR WALLS AND CEILINGS

A. Manufacturers: Subject to compliance with requirements, provide products by one of the following:

B. Basis-of-Design Product: Subject to compliance with requirements, provide product indicated or comparable product by one of the following:

1. Access Panel Solutions.
2. Acudor Products, Inc.
3. Alfab, Inc.
4. Babcock-Davis.
5. Cendrex Inc.
6. Elmdor/Stoneman Manufacturing Co.; Div. of Acorn Engineering Co.
7. Jensen Industries; Div. of Broan-Nutone, LLC.
8. J. L. Industries, Inc.; Div. of Activar Construction Products Group.
9. Karp Associates, Inc.
10. Larsen's Manufacturing Company.
11. Maxam Metal Products Limited.
12. Metropolitan Door Industries Corp.
13. MIFAB, Inc.
14. Milcor Inc.
15. Nystrom, Inc.
16. Williams Bros. Corporation of America (The).

C. Source Limitations: Obtain each type of access door and frame from single source from single manufacturer.

D. Flush Access Doors with Exposed Flanges.

1. Assembly Description: Fabricate door to fit flush to frame. Provide manufacturer's standard-width exposed flange, proportional to door size.
2. Locations: Wall and ceiling.
3. Uncoated Steel Sheet for Door: Nominal 0.060 inch (1.52 mm), 16 gage.

    a. Finish: Factory prime.

4. Frame Material: Same material, thickness, and finish as door.
5. Hinges: Spring-loaded, concealed-pin type.
6. Hardware: Lock – mortise cylinder.

a. Lock Preparation: Prepare door panel to accept cylinder specified in Division 08 Section "Door Hardware."

E. Fire-Rated, Flush Access Doors with Exposed Flanges:

1. Assembly Description: Fabricate door to fit flush to frame, with a core of mineral-fiber insulation enclosed in sheet metal. Provide self-latching door with automatic closer and interior latch release. Provide manufacturer's standard-width exposed flange, proportional to door size.
2. Locations: Wall and ceiling.
3. Fire-Resistance Rating: Not less than that of adjacent construction.
4. Uncoated Steel Sheet for Door: Nominal 0.036 inch (0.91 mm), 20 gage.

a. Finish: Factory prime.

5. Frame Material: Same material, thickness, and finish as door.
6. Hinges: Concealed-pin type.
7. Automatic Closer: Spring type.
8. Lock: Self-latching device with mortise cylinder lock.

a. Lock Preparation: Prepare door panel to accept cylinder specified in Division 08 Section "Door Hardware."

2.3 MATERIALS

A. Steel Plates, Shapes, and Bars: ASTM A 36/A 36M.

B. Rolled-Steel Floor Plate: ASTM A 786/A 786M, rolled from plate complying with ASTM A 36/A 36M or ASTM A 283/A 283M, Grade C or D.

C. Steel Sheet: Uncoated or electrolytic zinc coated, ASTM A 879/A 879M, with cold-rolled steel sheet substrate complying with ASTM A 1008/A 1008M, Commercial Steel (CS), exposed.

D. strength and durability properties of Alloy 5005-H15; with minimum sheet thickness according to ANSI H35.2 (ANSI H35.2M).

E. Frame Anchors: Same type as door face.

F. Inserts, Bolts, and Anchor Fasteners: Hot-dip galvanized steel according to ASTM A 153/A 153M or ASTM F 2329.

2.4 FABRICATION

A. General: Provide access door and frame assemblies manufactured as integral units ready for installation.

B. Metal Surfaces: For metal surfaces exposed to view in the completed Work, provide materials with smooth, flat surfaces without blemishes. Do not use materials with exposed pitting, seam marks, roller marks, rolled trade names, or roughness.

C. Doors and Frames: Grind exposed welds smooth and flush with adjacent surfaces. Furnish attachment devices and fasteners of type required to secure access doors to types of supports indicated.

1. For concealed flanges with drywall bead, provide edge trim for gypsum board securely attached to perimeter of frames.

2. Provide mounting holes in frames for attachment of units to metal framing.
3. Provide mounting holes in frame for attachment of masonry anchors.

D. Latching Mechanisms: Furnish number required to hold doors in flush, smooth plane when closed.

1. For cylinder locks, furnish two keys per lock and key all locks alike.

2.5 FINISHES

A. Comply with NAAMM's "Metal Finishes Manual for Architectural and Metal Products" for recommendations for applying and designating finishes.

B. Protect mechanical finishes on exposed surfaces from damage by applying a strippable, temporary protective covering before shipping.

C. Appearance of Finished Work: Noticeable variations in same piece are not acceptable. Variations in appearance of adjoining components are acceptable if they are within the range of approved Samples and are assembled or installed to minimize contrast.

D. Steel and Metallic-Coated-Steel Finishes:

1. Factory Prime: Apply manufacturer's standard, fast-curing, lead- and chromate-free, universal primer immediately after surface preparation and pretreatment.
2. Factory Finish: Immediately after cleaning and pretreating, apply manufacturer's standard two-coat, baked-on finish consisting of prime coat and thermosetting topcoat, with a minimum dry-film thickness of 1 mil (0.025 mm) for topcoat.

PART 3 - EXECUTION

3.1 EXAMINATION

A. Examine substrates for compliance with requirements for installation tolerances and other conditions affecting performance of the Work.

B. Proceed with installation only after unsatisfactory conditions have been corrected.

3.2 INSTALLATION

A. Comply with manufacturer's written instructions for installing access doors and frames.

B. Install doors flush with adjacent finish surfaces or recessed to receive finish material.

3.3 ADJUSTING

A. Adjust doors and hardware, after installation, for proper operation.

B. Remove and replace doors and frames that are warped, bowed, or otherwise damaged.

END OF SECTION 083113

SECTION 083323 - OVERHEAD COILING DOORS

PART 1 - GENERAL

1.1 RELATED DOCUMENTS

A. Drawings and general provisions of the Contract, including General and Supplementary Conditions and Division 01 Specification Sections, apply to this Section.

1.2 SUMMARY

A. Section Includes:
   1. Service doors.

B. Related Requirements:

   1. Section 055000 "Metal Fabrications" for miscellaneous steel supports.

1.3 ACTION SUBMITTALS

A. Product Data: For each type and size of overhead coiling door and accessory.

   1. Include construction details, material descriptions, dimensions of individual components, profiles for slats, and finishes.
   2. Include rated capacities, operating characteristics, electrical characteristics, and furnished accessories.
   3. Include description of automatic closing device and testing and resetting instructions.

B. Shop Drawings: For each installation and for special components not dimensioned or detailed in manufacturer's product data.

   1. Include plans, elevations, sections, and mounting details.
   2. Include details of equipment assemblies, and indicate dimensions, required clearances, method of field assembly, components, and location and size of each field connection.
   3. Include points of attachment and their corresponding static and dynamic loads imposed on structure.
   4. Show locations of controls, locking devices, detectors or replaceable fusible links, and other accessories.
   5. Include diagrams for power, signal, and control wiring.

C. Samples for Initial Selection: Manufacturer's finish charts showing full range of colors and textures available for units with factory-applied finishes.

   1. Include similar Samples of accessories involving color selection.

1.4 CLOSEOUT SUBMITTALS

A. Maintenance Data: For overhead coiling doors to include in maintenance manuals.

1.5 QUALITY ASSURANCE

A. Installer Qualifications: An entity that employs installers and supervisors who are trained and approved by manufacturer for both installation and maintenance of units required for this Project.

B. Regulatory Requirements: Comply with applicable provisions in the U.S. Architectural & Transportation Barriers Compliance Board's ADA-ABA Accessibility Guidelines and ICC A117.1

PART 2 - PRODUCTS

2.1 MANUFACTURERS, GENERAL

A. Source Limitations: Obtain overhead coiling doors from single source from single manufacturer.

1. Obtain operators and controls from overhead coiling door manufacturer.

2.2 DOOR ASSEMBLY (CD)

A. Service Door: Overhead coiling door formed with curtain of interlocking metal slats.

1. Manufacturers: Subject to compliance with requirements, provide products by one of the following:

a. Basis of Design Manufacturer: McKeon Rolling Steel Door Company, Inc.
b. ACME Rolling Doors.
c. Cookson Company.
d. Cornell Iron Works, Inc.
e. Overhead Door Corporation.

B. Operation Cycles: Door components and operators capable of operating for not less than 50,000. One operation cycle is complete when a door is opened from the closed position to the fully open position and returned to the closed position.

1. Include tamperproof cycle counter.

C. Door Curtain Material: Steel.

D. Door Curtain Slats: Flat profile slats of 3” center-to-center height.

E. Bottom Bar: Two angles, each not less than 2” by 2” by 1/8 inch fabricated from steel angles and finished to match door.

F. Curtain Jamb Guides: Steel with exposed finish matching curtain slats.

G. Hood: Match curtain material and finish.

1. Shape: Square.
2. Mounting: Face of wall.

H. Electric Door Operator:

1. Usage Classification: Medium duty, up to 12 cycles per hour and up to 50 cycles per day.

2. Operator Location: Front of hood.
3. Safety: Listed according to UL 325 by a qualified testing agency for commercial or industrial use; moving parts of operator enclosed or guarded if exposed and mounted at 8 feet (2.44 m) or lower.
4. Motor Exposure: Interior.
5. Emergency Manual Operation: Crank type.
6. Obstruction-Detection Device: Automatic photoelectric sensor electric sensor edge on bottom bar.

    a. Sensor Edge Bulb Color: As selected by Architect from manufacturer's full range.

7. Control Station: All operators are to be furnished with one (1) flush mount key switch control station marked open, close, and stop, housed in NEMA 1 enclosure.

I. Door Finish:
1. Baked-Enamel or Powder-Coated Finish: Color as selected by Architect from manufacturer's full range.
2. Interior Curtain-Slat Facing: Match finish of exterior curtain-slat face.

2.3 MATERIALS, GENERAL

A. Electrical Components, Devices, and Accessories: Listed and labeled as defined in NFPA 70, by a qualified testing agency, and marked for intended location and application.

2.4 DOOR CURTAIN MATERIALS AND CONSTRUCTION

A. Door Curtains: Fabricate overhead coiling-door curtain of interlocking metal slats, designed to withstand wind loading indicated, in a continuous length for width of door without splices. Unless otherwise indicated, provide slats of thickness and mechanical properties recommended by door manufacturer for performance, size, and type of door indicated, and as follows:

1. Steel Door Curtain Slats: Zinc-coated (galvanized), cold-rolled structural steel sheet; complying with ASTM A 653/A 653M, with G90 (Z275) zinc coating; nominal sheet thickness (coated) of 0.028 inch (0.71 mm); and as required.
2. Metal Interior Curtain-Slat Facing: Match metal of exterior curtain-slat face, with minimum steel thickness of 0.010 inch (0.25 mm).

B. Curtain Jamb Guides: Manufacturer's standard angles or channels and angles of same material and finish as curtain slats unless otherwise indicated, with sufficient depth and strength to retain curtain, to allow curtain to operate smoothly, and to withstand loading. Slot bolt holes for guide adjustment. Provide removable stops on guides to prevent overtravel of curtain.

2.5 HOODS

A. General: Form sheet metal hood to entirely enclose coiled curtain and operating mechanism at opening head. Contour to fit end brackets to which hood is attached. Roll and reinforce top and bottom edges for stiffness. Form closed ends for surface-mounted hoods and fascia for any portion of between-jamb mounting that projects beyond wall face. Equip hood with intermediate support brackets as required to prevent sagging.

1. Galvanized Steel: Nominal 0.028-inch- (0.71-mm-) thick, hot-dip galvanized steel sheet with G90 (Z275) zinc coating, complying with ASTM A 653/A 653M.

2.6 LOCKING DEVICES

A. Safety Interlock Switch: Equip power-operated doors with safety interlock switch to disengage power supply when door is locked.

2.7 CURTAIN ACCESSORIES

A. Astragal for Interior Doors: Equip each door bottom bar with a replaceable, adjustable, continuous, compressible gasket of flexible vinyl, rubber, or neoprene as a cushion bumper.

2.8 COUNTERBALANCING MECHANISM

A. General: Counterbalance doors by means of manufacturer's standard mechanism with an adjustable-tension, steel helical torsion spring mounted around a steel shaft and contained in a spring barrel connected to top of curtain with barrel rings. Use grease-sealed bearings or self-lubricating graphite bearings for rotating members.

B. Counterbalance Barrel: Fabricate spring barrel of manufacturer's standard hot-formed, structural-quality, seamless carbon-steel pipe, of sufficient diameter and wall thickness to support rolled-up curtain without distortion of slats and to limit barrel deflection to not more than 0.03 in./ft. (2.5 mm/m) of span under full load.

C. Brackets: Manufacturer's standard mounting brackets of either cast iron or cold-rolled steel plate.

2.9 ELECTRIC DOOR OPERATORS

A. General: Electric door operator assembly of size and capacity recommended and provided by door manufacturer for door and operation-cycles requirement specified, with electric motor and factory-prewired motor controls, starter, gear-reduction unit, solenoid-operated brake, clutch, control stations, control devices, integral gearing for locking door, and accessories required for proper operation.

1. Comply with NFPA 70.
2. Control equipment complying with NEMA ICS 1, NEMA ICS 2, and NEMA ICS 6, with NFPA 70 Class 2 control circuit, maximum 24-V ac or dc.

B. Usage Classification: Electric operator and components capable of operating for not less than number of cycles per hour indicated for each door.

C. Door Operator Location(s): Operator location indicated for each door.
1. Front-of-Hood Mounted: Operator is mounted to the right or left door head plate with the operator on coil side of the door-hood assembly and connected to the door drive shaft with drive chain and sprockets. Front clearance is required for this type of mounting.

D. Motors: Reversible-type motor with controller (disconnect switch) for motor exposure indicated.

1. Electrical Characteristics:

a. Phase: Single phase.
b. Volts: 115 V.
c. Hertz: 60.

2. Motor Size: Minimum size as indicated. If not indicated, large enough to start, accelerate, and operate door in either direction from any position, at a speed not less than 8 in./sec. (203 mm/s) and not more than 12 in./sec. (305 mm/s), without exceeding nameplate ratings or service factor.
3. Operating Controls, Controllers, Disconnect Switches, Wiring Devices, and Wiring: Manufacturer's standard unless otherwise indicated.
4. Coordinate wiring requirements and electrical characteristics of motors and other electrical devices with building electrical system and each location where installed.

E. Limit Switches: Equip each motorized door with adjustable switches interlocked with motor controls and set to automatically stop door at fully opened and fully closed positions.

F. Obstruction Detection Devices: External entrapment protection consisting of indicated automatic safety sensor capable of protecting full width of door opening. For non-fire-rated doors, activation of device immediately stops and reverses downward door travel. For fire-rated doors, activation delays closing.

1. Electric Sensor Edge: Automatic safety sensor edge, located within astragal or weather stripping mounted to bottom bar. Contact with sensor activates device. Connect to control circuit using manufacturer's standard take-up reel or self-coiling cable.

a. Self-Monitoring Type: Four-wire configured device designed to interface with door operator control circuit to detect damage to or disconnection of sensor edge.

G. Control Station: Three-button control station in fixed location with momentary-contact push-button controls labeled "Open" and "Stop" and sustained- or constant-pressure push-button control labeled "Close."

1. Interior-Mounted Units: Full-guarded, surface-mounted, heavy-duty type, with general-purpose NEMA ICS 6, Type 1 enclosure.

H. Emergency Manual Operation: Equip each electrically powered door with capability for emergency manual operation. Design manual mechanism so required force for door operation does not exceed 25 lbf.

I. Emergency Operation Disconnect Device: Equip operator with hand-operated disconnect mechanism for automatically engaging manual operator and releasing brake for emergency manual operation while disconnecting motor without affecting timing of limit switch. Mount mechanism so it is accessible from floor level. Include interlock device to automatically prevent motor from operating when emergency operator is engaged.

J. Motor Removal: Design operator so motor may be removed without disturbing limit-switch adjustment and without affecting emergency manual operation.

K. Audible and Visual Signals: Audible alarm and visual indicator lights in compliance with regulatory requirements for accessibility.

2.10 GENERAL FINISH REQUIREMENTS

A. Comply with NAAMM/NOMMA's "Metal Finishes Manual for Architectural and Metal Products (AMP 500-06)" for recommendations for applying and designating finishes.

B. Appearance of Finished Work: Noticeable variations in same piece are not acceptable. Variations in appearance of adjoining components are acceptable if they are within the range of approved Samples and are assembled or installed to minimize contrast.

2.11 STEEL AND GALVANIZED-STEEL FINISHES

A. Baked-Enamel or Powder-Coat Finish: Manufacturer's standard baked-on finish consisting of prime coat and thermosetting topcoat. Comply with coating manufacturer's written instructions for cleaning, pretreatment, application, and minimum dry film thickness.

PART 3 - EXECUTION

3.1 EXAMINATION

A. Examine substrates areas and conditions, with Installer present, for compliance with requirements for substrate construction and other conditions affecting performance of the Work.

B. Examine locations of electrical connections.

C. Proceed with installation only after unsatisfactory conditions have been corrected.

3.2 INSTALLATION

A. Install overhead coiling doors and operating equipment complete with necessary hardware, anchors, inserts, hangers, and equipment supports; according to manufacturer's written instructions and as specified.

B. Install overhead coiling doors, hoods, controls, and operators at the mounting locations indicated for each door.

C. Accessibility: Install overhead coiling doors, switches, and controls along accessible routes in compliance with regulatory requirements for accessibility.

D. Power-Operated Doors: Install according to UL 325.

3.3 STARTUP SERVICE

A. Engage a factory-authorized service representative to perform startup service.

1. Perform installation and startup checks according to manufacturer's written instructions.
2. Test and adjust controls and safety devices. Replace damaged and malfunctioning controls and equipment.
3. Test door closing when activated by detector or alarm-connected fire-release system. Reset door-closing mechanism after successful test.

3.4 ADJUSTING

A. Adjust hardware and moving parts to function smoothly so that doors operate easily, free of warp, twist, or distortion.

1. Adjust exterior doors and components to be weather-resistant.

B. Lubricate bearings and sliding parts as recommended by manufacturer.

C. Adjust seals to provide tight fit around entire perimeter.

3.5 DEMONSTRATION

A. Engage a factory-authorized service representative to train Owner's maintenance personnel to adjust, operate, and maintain overhead coiling doors.

END OF SECTION 083323

SECTION 083326 - OVERHEAD COILING GRILLES

PART 1 - GENERAL

1.1 RELATED DOCUMENTS

A. Drawings and general provisions of the Contract, including General and Supplementary Conditions and Division 01 Specification Sections, apply to this Section.

1.2 SUMMARY

A. Section Includes:

1. Open-curtain overhead coiling grilles.

B. Related Requirements:

1. Section 055000 "Metal Fabrications" for miscellaneous steel supports, angle-framing of grille opening, corner guards, and bollards.

1.3 ACTION SUBMITTALS

A. Product Data: For each type and size of overhead coiling grille and accessory.

1. Include construction details, material descriptions, dimensions of individual components, profiles for curtain components, and finishes.
2. Include rated capacities, operating characteristics, electrical characteristics, and furnished accessories.

B. Shop Drawings: For each installation and for special components not dimensioned or detailed in manufacturer's product data.

1. Include plans, elevations, sections, and mounting details.
2. Include details of equipment assemblies. Indicate dimensions, required clearances, method of field assembly, components, and location and size of each field connection.
3. Include points of attachment and their corresponding static and dynamic loads imposed on structure.
4. Show locations of controls, locking devices, and other accessories.
5. Include diagrams for power, signal, and control wiring.

C. Samples for Initial Selection: Manufacturer's finish charts showing full range of colors and textures available for units with factory-applied finishes.

1. Include similar Samples of accessories involving color selection.

1.4 CLOSEOUT SUBMITTALS

A. Maintenance Data: For overhead coiling grilles to include in maintenance manuals.

1.5 QUALITY ASSURANCE

A. Installer Qualifications: An entity that employs installers and supervisors who are trained and approved by manufacturer for both installation and maintenance of units required for this Project.

B. Regulatory Requirements: Comply with applicable provisions in the U.S. Architectural & Transportation Barriers Compliance Board's ADA-ABA Accessibility Guidelines and ICC A117.1.

PART 2 - PRODUCTS

2.1 MANUFACTURERS, GENERAL

A. Source Limitations: Obtain overhead coiling grilles from single source from single manufacturer.

1. Obtain operators and controls from overhead coiling-grille manufacturer.

2.2 OPEN-CURTAIN GRILLE ASSEMBLY **(CG)**

A. Open-Curtain Grille: Overhead coiling grille with a curtain having a network of horizontal rods that interconnect with vertical links.

1. Manufacturers: Subject to compliance with requirements, provide products by one of the following:
   a. Basis of Design Manufacturer: McKeon Rolling Steel Door Company, Inc.
   b. ACME Rolling Doors.
   c. Cookson Company.
   d. Cornell Iron Works, Inc.
   e. Overhead Door Corporation.

B. Operation Cycles: Grille components and operators capable of operating for not less than 50,000 cycles. One operation cycle is complete when a grille is opened from the closed position to the fully open position and returned to the closed position.

1. Include tamperproof cycle counter.

C. Grille Curtain Material: Aluminum

1. Rod Spacing: Approximately 1-1/2 inches (38 mm) o.c.
2. Link Spacing: Approximately 9 inches (228 mm) in a straight in-line pattern.
3. Spacers: Metal tubes matching curtain material.

D. Bottom Bar: Continuous tube, fabricated from aluminum extrusion and finished to match grille.

E. Curtain Jamb Guides: Aluminum with exposed finish matching curtain slats. Provide continuous integral wear strips to prevent metal-to-metal contact and to minimize operational noise.

F. Hood: Galvanized steel.

1. Shape: Square.
2. Mounting: Face of wall.

G. Electric Grille Operator:

1. Usage Classification: Medium duty, up to 12 cycles per hour and up to 50 cycles per day.
2. Operator Location: As indicated on Drawings.
3. Safety: Listed according to UL 325 by a qualified testing agency for commercial or industrial use; moving parts of operator enclosed or guarded if exposed and mounted at 8 feet (2.4 m) or lower.
4. Motor Exposure: Interior.
5. Emergency Manual Operation: Push-up type.
6. Obstruction-Detection Device: Automatic electric sensor edge on bottom bar.

    a. Sensor Edge Bulb Color: As selected by Architect from manufacturer's full range.

7. Control Station: Interior mounted where indicated on drawings.
8. Other Equipment: Emergency-egress release and self-opening mechanism.

H. Grille Finish:

1. Aluminum Finish: Mill.

2.3 MATERIALS, GENERAL

A. Electrical Components, Devices, and Accessories: Listed and labeled as defined in NFPA 70, by a qualified testing agency, and marked for intended location and application.

2.4 GRILLE CURTAIN MATERIALS AND CONSTRUCTION

A. Open-Curtain Grilles: Fabricate metal grille curtain as an open network of horizontal rods, spaced at regular intervals, that are interconnected with vertical links, which are formed and spaced as indicated and are free to rotate on the rods.

1. Aluminum Grille Curtain: ASTM B 221 (ASTM B 221M), alloy and temper recommended by aluminum producer and finisher for type of use and finish indicated.

B. Bottom Bar: Manufacturer's standard continuous shape unless otherwise indicated, finished to match grille.

1. Astragal: Equip grille bottom bar with a replaceable, adjustable, continuous, compressible gasket of flexible vinyl, rubber, or neoprene as a cushion bumper.
2. Provide motor-operated grilles with combination bottom astragal and sensor edge.

C. Grille Curtain Jamb Guides: Manufacturer's standard shape having curtain groove with return lips or bars to retain curtain. Provide continuous integral wear strips to prevent metal-to-metal contact and to minimize operational noise; with removable stops on guides to prevent overtravel of curtain.

1. Removable Posts and Jamb Guides: Manufacturer's standard.

2.5 HOODS AND ACCESSORIES

A. General: Form sheet metal hood to entirely enclose coiled curtain and operating mechanism at opening head. Contour to fit end brackets to which hood is attached. Roll and reinforce top and bottom edges for stiffness. Form closed ends for surface-mounted hoods and fascia for any portion of between-jamb mounting that projects beyond wall face. Equip hood with intermediate support brackets as required to prevent sagging.

1. Galvanized Steel: Nominal 0.028-inch- (0.71-mm-) thick, hot-dip galvanized-steel sheet with G90 (Z275) zinc coating, complying with ASTM A 653/A 653M.

B. Removable Metal Soffit: Formed or extruded from same metal and with same finish as curtain if hood is mounted above ceiling, unless otherwise indicated.

C. Mounting Frame: Manufacturer's standard mounting frame designed to support grille; factory fabricated from ASTM A 36/A 36M structural-steel tubes or shapes, hot-dip galvanized per ASTM A 123/A 123M; fastened to floor and structure above grille; to be built into wall construction; and complete with anchors, connections, and fasteners.

2.6 LOCKING DEVICES

A. Safety Interlock Switch: Equip power-operated grilles with safety interlock switch to disengage power supply when grille is locked.

2.7 COUNTERBALANCING MECHANISM

A. General: Counterbalance grilles by means of manufacturer's standard mechanism with an adjustable-tension, steel helical torsion spring mounted around a steel shaft and contained in a spring barrel connected to top of curtain with barrel rings. Use grease-sealed bearings or self-lubricating graphite bearings for rotating members.

B. Counterbalance Barrel: Fabricate spring barrel of manufacturer's standard hot-formed, structural-quality, seamless carbon-steel pipe, of sufficient diameter and wall thickness to support rolled-up curtain without distortion of parts and to limit barrel deflection to not more than 0.03 in./ft. (2.5 mm/m) of span under full load.

C. Brackets: Manufacturer's standard mounting brackets of either cast iron or cold-rolled steel plate.

2.8 ELECTRIC GRILLE OPERATORS

A. General: Electric grille operator assembly of size and capacity recommended and provided by grille manufacturer for grille and operation cycles requirement specified, with electric motor and factory-prewired motor controls, starter, gear-reduction unit, solenoid-operated brake, clutch, control stations, control devices, integral gearing for locking grille, and accessories required for proper operation.

1. Comply with NFPA 70.
2. Control equipment complying with NEMA ICS 1, NEMA ICS 2, and NEMA ICS 6, with NFPA 70 Class 2 control circuit, maximum 24-V ac or dc.

B. Usage Classification: Electric operator and components capable of operating for not less than number of cycles per hour indicated for each grille.

C. Grille Operator Location(s): Operator location indicated for each grille.

1. Front-of-Hood Mounted: Operator is mounted to the right or left grille head plate, with the operator on coil side of the grille-hood assembly and connected to the grille drive shaft with drive chain and sprockets. Front clearance is required for this type of mounting.

D. Motors: Reversible-type motor with controller (disconnect switch) for motor exposure indicated.

1. Electrical Characteristics:

   a. Phase: Single phase.
   b. Volts: 115 V.
   c. Hertz: 60.

2. Motor Size: Minimum size as indicated. If not indicated, large enough to start, accelerate, and operate grille in either direction from any position, at a speed not less than 8 in./sec. (203 mm/s) and not more than 12 in./sec. (305 mm/s), without exceeding nameplate ratings or service factor.
3. Operating Controls, Controllers (Disconnect Switches), Wiring Devices, and Wiring: Manufacturer's standard unless otherwise indicated.
4. Coordinate wiring requirements and electrical characteristics of motors and other electrical devices with building electrical system and each location where installed.

E. Limit Switches: Equip motorized grille with adjustable switches interlocked with motor controls and set to automatically stop grille at fully opened and fully closed positions.

F. Obstruction-Detection Device: External entrapment protection consisting of indicated automatic safety sensor capable of protecting full width of grille opening. Activation of sensor immediately stops and reverses downward grille travel.

1. Electric Sensor Edge: Automatic safety sensor edge, located within astragal or weather stripping mounted to bottom bar. Contact with sensor activates device. Connect to control circuit using manufacturer's standard take-up reel or self-coiling cable.

   a. Self-Monitoring Type: Four-wire configured device designed to interface with grille operator control circuit to detect damage to or disconnection of sensor edge.

G. Control Station: Three-button control station in fixed location with momentary-contact push-button controls labeled "Open" and "Stop" and sustained- or constant-pressure push-button control labeled "Close."

1. Interior-Mounted Units: Full-guarded, surface-mounted, heavy-duty type, with general-purpose NEMA ICS 6, Type 1 enclosure.

H. Emergency Manual Operation: Equip electrically powered grille with capability for emergency manual operation. Design manual mechanism so required force for grille operation does not exceed 25 lbf.

I. Emergency Operation Disconnect Device: Equip operator with hand-operated disconnect mechanism for automatically engaging manual operator and releasing brake for emergency manual operation while disconnecting motor without affecting timing of limit switch. Mount mechanism so it is accessible from floor level. Include interlock device to automatically prevent motor from operating when emergency operator is engaged.

J. Motor Removal: Design operator so motor may be removed without disturbing limit-switch adjustment and without affecting emergency manual operation.

K. Audible and Visual Signals: Audible alarm and visual indicator lights in compliance with regulatory requirements for accessibility.

L. Emergency-Egress Release: Flush, wall-mounted handle mechanism, for accessibility-code-compliant egress feature, not dependent on electric power. The release allows an unlocked grille to partially open without affecting limit switches to permit passage, and it automatically resets motor drive upon return of handle to original position.

2.9 GENERAL FINISH REQUIREMENTS

A. Comply with NAAMM/NOMMA's "Metal Finishes Manual for Architectural and Metal Products (AMP 500-06)" for recommendations for applying and designating finishes.

B. Appearance of Finished Work: Noticeable variations in same piece are not acceptable. Variations in appearance of adjoining components are acceptable if they are within the range of approved Samples and are assembled or installed to minimize contrast.

2.10 ALUMINUM FINISHES

A. Mill Finish: Manufacturer's standard.

PART 3 - EXECUTION

3.1 EXAMINATION

A. Examine substrates, areas, and conditions, with Installer present, for compliance with requirements for substrate construction and other conditions affecting performance of the Work.

B. Examine locations of electrical connections.

C. Proceed with installation only after unsatisfactory conditions have been corrected.

3.2 INSTALLATION

A. Install overhead coiling grilles and operating equipment complete with necessary hardware, anchors, inserts, hangers, and equipment supports, according to manufacturer's written instructions and as specified.

B. Install overhead coiling grilles, hoods, controls, and operators at the mounting locations indicated for each grille.

C. Accessibility: Install overhead coiling grilles, switches, and controls along accessible routes in compliance with regulatory requirements for accessibility.

D. Power-Operated Grilles: Install according to UL 325.

3.3 STARTUP SERVICE

A. Perform installation and startup checks according to manufacturer's written instructions.

B. Test and adjust controls and safety devices. Replace damaged and malfunctioning controls and equipment.

C. Test grille opening when activated by detector, fire-alarm system, emergency-egress release, or self-opening mechanism as required. Reset grille-opening mechanism after successful test.

3.4 ADJUSTING

A. Adjust hardware and moving parts to function smoothly, so that grilles operate easily, free of warp, twist, or distortion.

1. Adjust exterior components to be weather resistant.

B. Lubricate bearings and sliding parts as recommended by manufacturer.

3.5 DEMONSTRATION

A. Engage a factory-authorized service representative to train Owner's maintenance personnel to adjust, operate, and maintain overhead coiling grilles.

END OF SECTION 083326

SECTION 084113 - ALUMINUM-FRAMED ENTRANCES AND STOREFRONTS

PART 1 - GENERAL

1.1 RELATED DOCUMENTS

A. Drawings and general provisions of the Contract, including General and Supplementary Conditions and Division 01 Specification Sections, apply to this Section.

1.2 SUMMARY

A. Section Includes:

1. Exterior and interior storefront framing.
2. Storefront framing for punched openings.
3. Exterior and interior manual-swing entrance doors and door-frame units.

B. Related Requirements:

1. Section 042000 "Unit Masonry" for adjacent surfaces

2. Section 084413 “Glazed Aluminum Curtainwalls”

3. Section 087100 “Door Hardware”

4. Section 088000 “Glazing”

1.3 ACTION SUBMITTALS

A. Product Data: For each type of product.

1. Include construction details, material descriptions, dimensions of individual components and profiles, and finishes.

B. Shop Drawings: For aluminum-framed entrances and storefronts. Include plans, elevations, sections, full-size details, and attachments to other work.

1. Include details of provisions for assembly expansion and contraction and for draining moisture occurring within the assembly to the exterior.
2. Include full-size isometric details of each vertical-to-horizontal intersection of aluminum-framed entrances and storefronts, showing the following:

   a. Joinery, including concealed welds.
   b. Anchorage.
   c. Expansion provisions.
   d. Glazing.
   e. Flashing and drainage.

3. Show connection to and continuity with adjacent thermal, weather, air, and vapor barriers.

C. Samples for Initial Selection: For units with factory-applied color finishes.

D. Samples for Verification: For each type of exposed finish required, in manufacturer's standard sizes.

E. Entrance Door Hardware Schedule: Prepared by or under supervision of supplier, detailing fabrication and assembly of entrance door hardware, as well as procedures and diagrams. Coordinate final entrance door hardware schedule with doors, frames, and related work to ensure proper size, thickness, hand, function, and finish of entrance door hardware.

F. Delegated-Design Submittal: For aluminum-framed entrances and storefronts indicated to comply with performance requirements and design criteria, including analysis data signed and sealed by the qualified professional engineer responsible for their preparation.

1.4 INFORMATIONAL SUBMITTALS

A. Sample Warranties: For special warranties.

1.5 CLOSEOUT SUBMITTALS

A. Maintenance Data: For aluminum-framed entrances and storefronts to include in maintenance manuals.

1.6 QUALITY ASSURANCE

A. Installer Qualifications: An entity that employs installers and supervisors who are trained and approved by manufacturer.

B. Product Options: Information on Drawings and in Specifications establishes requirements for aesthetic effects and performance characteristics of assemblies. Aesthetic effects are indicated by dimensions, arrangements, alignment, and profiles of components and assemblies as they relate to sightlines, to one another, and to adjoining construction.

1. Do not change intended aesthetic effects, as judged solely by Architect, except with Architect's approval. If changes are proposed, submit comprehensive explanatory data to Architect for review.

1.7 WARRANTY

A. Special Warranty: Manufacturer agrees to repair or replace components of aluminum-framed entrances and storefronts that do not comply with requirements or that fail in materials or workmanship within specified warranty period.

1. Failures include, but are not limited to, the following:

a. Structural failures including, but not limited to, excessive deflection.
b. Noise or vibration created by wind and thermal and structural movements.
c. Deterioration of metals, metal finishes, and other materials beyond normal weathering.
d. Water penetration through fixed glazing and framing areas.
e. Failure of operating components.

2. Warranty Period: 10 years from date of Substantial Completion.

B. Special Finish Warranty: Standard form in which manufacturer agrees to repair finishes or replace aluminum that shows evidence of deterioration of factory-applied finishes within specified warranty period.

1. Deterioration includes, but is not limited to, the following:

a. Color fading more than 5 Hunter units when tested according to ASTM D 2244.
b. Chalking in excess of a No. 8 rating when tested according to ASTM D 4214.
c. Cracking, checking, peeling, or failure of paint to adhere to bare metal.

2. Warranty Period: 10 years from date of Substantial Completion.

PART 2 - PRODUCTS

2.1 PERFORMANCE REQUIREMENTS

A. Delegated Design: Engage a professional engineer licensed in Delaware to design aluminum-framed entrances and storefronts.

B. General Performance: Comply with performance requirements specified, as determined by testing of aluminum-framed entrances and storefronts representing those indicated for this Project without failure due to defective manufacture, fabrication, installation, or other defects in construction.

1. Aluminum-framed entrances and storefronts shall withstand movements of supporting structure including, but not limited to, story drift, twist, column shortening, long-term creep, and deflection from uniformly distributed and concentrated live loads.
2. Failure also includes the following:

a. Thermal stresses transferring to building structure.
b. Glass breakage.
c. Noise or vibration created by wind and thermal and structural movements.
d. Loosening or weakening of fasteners, attachments, and other components.
e. Failure of operating units.

C. Structural Loads:

1. Wind Loads: As indicated on Drawings.
2. Other Design Loads: As indicated on Drawings.

D. Deflection of Framing Members: At design wind pressure, as follows:

1. Deflection Normal to Wall Plane: Limited to edge of glass in a direction perpendicular to glass plane not exceeding 1/175 of the glass edge length for each individual glazing lite or an amount that restricts edge deflection of individual glazing lites to 3/4 inch (19.1 mm), whichever is less.
2. Deflection Parallel to Glazing Plane: Limited to amount not exceeding that which reduces glazing bite to less than 75 percent of design dimension and that which reduces edge clearance between framing members and glazing or other fixed components to less than 1/8 inch (3.2 mm).

a. Operable Units: Provide a minimum 1/16-inch (1.6-mm) clearance between framing members and operable units.

3. Cantilever Deflection: Where framing members overhang an anchor point, as follows:

a. Perpendicular to Plane of Wall: No greater than 1/240 of clear span plus 1/4 inch (6.35 mm) for spans greater than 11 feet 8-1/4 inches (3.6 m) or 1/175 times span, for spans less than 11 feet 8-1/4 inches (3.6 m).

E. Air Infiltration: Test according to ASTM E 283 for infiltration as follows:

1. Fixed Framing and Glass Area:

a. Maximum air leakage of 0.06 cfm/sq. ft. at a static-air-pressure differential of 1.57 lbf/sq. ft.

2. Entrance Doors:

a. Pair of Doors: Maximum air leakage of 1.0 cfm/sq. ft. at a static-air-pressure differential of 1.57 lbf/sq. ft. (75 Pa).
b. Single Doors: Maximum air leakage of 0.5 cfm/sq. ft**.** at a static-air-pressure differential of 1.57 lbf/sq. ft. (75 Pa).

F. Water Penetration under Static Pressure: Test according to ASTM E 331 as follows:

1. No evidence of water penetration through fixed glazing and framing areas when tested according to a minimum static-air-pressure differential of 20 percent of positive wind-load design pressure, but not less than 6.24 lbf/sq. ft.

G. Energy Performance: Certify and label energy performance according to NFRC as follows:

1. Thermal Transmittance (U-factor): Fixed glazing and framing areas shall have U-factor of not more than 0.45 Btu/sq. ft. x h x deg F as determined according to NFRC 100.
2. Solar Heat Gain Coefficient: Fixed glazing and framing areas shall have a solar heat gain coefficient of no greater than 0.35 as determined according to NFRC 200.
3. Condensation Resistance: Fixed glazing and framing areas shall have an NFRC-certified condensation resistance rating of no less than 45 as determined according to NFRC 500.

H. Thermal Movements: Allow for thermal movements resulting from ambient and surface temperature changes:

1. Temperature Change: 120 deg F (67 deg C), ambient; 180 deg F (100 deg C), material surfaces.
2. Thermal Cycling: No buckling; stress on glass; sealant failure; excess stress on framing, anchors, and fasteners; or reduction of performance when tested according to AAMA 501.5.

a. High Exterior Ambient-Air Temperature: That which produces an exterior metal-surface temperature of 180 deg F.
b. Low Exterior Ambient-Air Temperature: 0 deg F.
c. Interior Ambient-Air Temperature: 75 deg F.

2.2 MANUFACTURERS

A. Manufacturers: Subject to compliance with requirements, provide products by one of the following:

1. <u>YKK AP America Inc</u>.
   a. Exterior: YES 45 TU
   b. Interior: YES 45 FS

2. <u>Kawneer North America</u>. –

a. Exterior: Trifab VG 451-T
b. Interior: Trifab VG 450

3. Oldcastle Building Envelope–
a. Exterior: Series 3000
b. Interior: FG-2000

B. Source Limitations: Obtain all components of aluminum-framed entrance and storefront system, including venting windows and accessories, from single manufacturer.

2.3 FRAMING

A. Framing Members: Manufacturer's extruded- or formed-aluminum framing members of thickness required and reinforced as required to support imposed loads.

1. Construction: Exterior - Thermally improved.
2. Glazing System: Retained mechanically with gaskets on four sides.
3. Glazing Plane: Front.
4. Finish: Clear anodic finish.
5. Fabrication Method: Field-fabricated stick system.
6. Reinforce doors and frames to receive nontemplated, mortised, and surface-mounted door hardware.

B. Backer Plates: Manufacturer's standard, continuous backer plates for framing members, if not integral, where framing abuts adjacent construction.

C. Brackets and Reinforcements: Manufacturer's standard high-strength aluminum with nonstaining, nonferrous shims for aligning system components.

D. Materials:

1. Aluminum: Alloy and temper recommended by manufacturer for type of use and finish indicated.

a. Sheet and Plate: ASTM B 209 (ASTM B 209M).
b. Extruded Bars, Rods, Profiles, and Tubes: ASTM B 221 (ASTM B 221M).
c. Extruded Structural Pipe and Tubes: ASTM B 429/B 429M.
d. Structural Profiles: ASTM B 308/B 308M.

2. Steel Reinforcement: Manufacturer's standard zinc-rich, corrosion-resistant primer complying with SSPC-PS Guide No. 12.00; applied immediately after surface preparation and pretreatment. Select surface preparation methods according to recommendations in SSPC-SP COM, and prepare surfaces according to applicable SSPC standard.

a. Structural Shapes, Plates, and Bars: ASTM A 36/A 36M.
b. Cold-Rolled Sheet and Strip: ASTM A 1008/A 1008M.
c. Hot-Rolled Sheet and Strip: ASTM A 1011/A 1011M.

2.4 VENTING WINDOWS

A. Aluminum Windows: Manufacturer's standard units, complying with AAMA/WDMA/CSA 101/I.S.2/A440, with self-flashing mounting fins, and as follows:

1. Window Type: Awning
2. Minimum Performance Class: AW.
3. Minimum Performance Grade: 40.
4. Aluminum Extrusions: ASTM B 221 (ASTM B 221M), alloy and temper recommended by manufacturer for strength, corrosion resistance, and application of required finish, but not less than 0.064-inch (1.63-mm) thickness at any location for main frame and sash members.

    a. Thermally Improved Construction: Fabricate window units with an integral, concealed, low-conductance thermal barrier; located between exterior materials and window members exposed on interior side; in a manner that eliminates direct metal-to-metal contact.

5. Mullions: Between adjacent windows, fabricated of extruded aluminum matching finish of window units.
6. Fasteners, Anchors, and Clips: Nonmagnetic stainless steel, aluminum, or other noncorrosive material, compatible with aluminum window members, trim, hardware, anchors, and other components of window units. Fasteners shall not be exposed, except for attaching hardware.

    a. Reinforcement: Where fasteners screw-anchor into aluminum less than 0.128 inch (3.26 mm) thick, reinforce interior with aluminum or nonmagnetic stainless steel to receive screw threads, or provide standard, noncorrosive, pressed-in, spline grommet nuts.
7. Projected Window Hardware (Awning):
    a. Gear-Type Rotary Operators: Complying with AAMA 901 when tested according to ASTM E 405, Method A. Provide operators that function without requiring the removal of interior screens or using screen wickets.
        1) Type and Style: As selected by Architect from manufacturer's full range of types and styles.
    b. Hinges: Non-friction type, not less than two per sash.
    c. Lock: Lever handle and cam-action lock with keeper.

8. Insect Screens: Provide removable insect screen on each operable exterior sash, with screen frame finished to match window unit, complying with SMA 1004 or SMA 1201, and as follows:

    a. Aluminum Wire Fabric: 18-by-18 (1.1-by-1.1-mm), 18-by-16 (1.1-by-1.3-mm), or 18-by-14 (1.1-by-1.5-mm) mesh of 0.013-inch- (0.3-mm-) diameter, coated aluminum wire.

B. Glazing: Same as adjacent aluminum-framed entrances and storefront glazing.

C. Finish: Match adjacent aluminum-framed entrances and storefront finish.

2.5 ENTRANCE DOOR SYSTEMS

A. Entrance Doors: Manufacturer's standard glazed entrance doors for manual-swing operation.

1. Door Construction: 2-inch overall thickness, with minimum 0.188-inch- thick, extruded-aluminum tubular rail and stile members. Mechanically fasten corners with reinforcing brackets that are deeply penetrated and fillet welded or that incorporate concealed tie rods.

2. Door Design: As indicated.
3. Glazing Stops and Gaskets: Square, snap-on, extruded-aluminum stops and preformed gaskets.

    a. Provide nonremovable glazing stops on outside of door.

2.6 ENTRANCE DOOR HARDWARE

A. Entrance Door Hardware: Hardware not specified in this Section is specified in Section 087100 "Door Hardware."

B. Designations: Requirements for design, grade, function, finish, size, and other distinctive qualities of each type of entrance door hardware are indicated in "Entrance Door Hardware Sets" Article. Products are identified by using entrance door hardware designations as follows:

1. Named Manufacturers' Products: Manufacturer and product designation are listed for each door hardware type required for the purpose of establishing minimum requirements. Manufacturers' names are abbreviated in "Entrance Door Hardware Sets" Article.
2. References to BHMA Standards: Provide products complying with these standards and requirements for description, quality, and function.

C. Continuous-Gear Hinges: Manufacturer's standard with stainless-steel bearings between knuckles, fabricated to full height of door and frame.

D. Mortise Auxiliary Locks: BHMA A156.5, Grade 1.

E. Automatic and Self-Latching Flush Bolts: BHMA A156.3, Grade 1.

F. Panic Exit Devices: BHMA A156.3, Grade 1, listed and labeled by a testing and inspecting agency acceptable to authorities having jurisdiction, for panic protection, based on testing according to UL 305.

G. Cylinders: As specified in Section 087100 "Door Hardware."

H. Strikes: Provide strike with black-plastic dust box for each latch or lock bolt; fabricated for aluminum framing.

I. Operating Trim: BHMA A156.6.

J. Removable Mullions: BHMA A156.3, extruded aluminum.

1. When used with panic exit devices, provide removable mullions listed and labeled by a testing and inspecting agency acceptable to authorities having jurisdiction, for panic protection, based on testing according to UL 305. Use only mullions that have been tested with exit devices to be used.

K. Closers: BHMA A156.4, Grade 1, with accessories required for a complete installation, sized as required by door size, exposure to weather, and anticipated frequency of use; adjustable to comply with field conditions and requirements for opening force.

L. Concealed Overhead Holders: BHMA A156.8, Grade 1.

M. Surface-Mounted Holders: BHMA A156.16, Grade 1.

N. Door Stops: BHMA A156.16, Grade 1, floor or wall mounted, as appropriate for door location indicated, with integral rubber bumper.

O. Weather Stripping: Manufacturer's standard replaceable components.

1. Compression Type: Made of ASTM D 2000, molded neoprene, or ASTM D 2287, molded PVC.
2. Sliding Type: AAMA 701/702, made of wool, polypropylene, or nylon woven pile with nylon-fabric or aluminum-strip backing.

P. Weather Sweeps: Manufacturer's standard exterior-door bottom sweep with concealed fasteners on mounting strip.

Q. Silencers: BHMA A156.16, Grade 1.

R. Thresholds: BHMA A156.21, raised thresholds beveled with a slope of not more than 1:2, with maximum height of 1/2 inch (12.7 mm).

S. Finger Guards: Manufacturer's standard collapsible neoprene or PVC gasket anchored to frame hinge-jamb at center-pivoted doors.

2.7 GLAZING

A. Glazing: Comply with Section 088000 "Glazing."

2.8 ACCESSORIES

A. Fasteners and Accessories: Manufacturer's standard corrosion-resistant, nonstaining, nonbleeding fasteners and accessories compatible with adjacent materials.

1. Use self-locking devices where fasteners are subject to loosening or turning out from thermal and structural movements, wind loads, or vibration.
2. Reinforce members as required to receive fastener threads.

B. Anchors: Three-way adjustable anchors with minimum adjustment of 1 inch that accommodate fabrication and installation tolerances in material and finish compatible with adjoining materials and recommended by manufacturer.

1. Masonry Inserts: Hot-dip galvanized cast-iron, malleable-iron, or steel inserts complying with ASTM A 123/A 123M or ASTM A 153/A 153M requirements.

C. Concealed Flashing: Manufacturer's standard corrosion-resistant, nonstaining, nonbleeding flashing compatible with adjacent materials.

D. Bituminous Paint: Cold-applied asphalt-mastic paint complying with SSPC-Paint 12 requirements except containing no asbestos, formulated for 30-mil (0.762-mm) thickness per coat.

2.9 FABRICATION

A. Form or extrude aluminum shapes before finishing.

B. Weld in concealed locations to greatest extent possible to minimize distortion or discoloration of finish. Remove weld spatter and welding oxides from exposed surfaces by descaling or grinding.

C. Fabricate components that, when assembled, have the following characteristics:

1. Profiles that are sharp, straight, and free of defects or deformations.
2. Accurately fitted joints with ends coped or mitered.
3. Physical and thermal isolation of glazing from framing members.
4. Accommodations for thermal and mechanical movements of glazing and framing to maintain required glazing edge clearances.

5. Provisions for field replacement of glazing from interior for vision glass and exterior for spandrel glazing or metal panels.
6. Fasteners, anchors, and connection devices that are concealed from view to greatest extent possible.

D. Mechanically Glazed Framing Members: Fabricate for flush glazing without projecting stops.

E. Storefront Framing: Fabricate components for assembly using shear-block system.

F. Entrance Door Frames: Reinforce as required to support loads imposed by door operation and for installing entrance door hardware.

1. At exterior doors, provide compression weather stripping at fixed stops.
2. At interior doors, provide silencers at stops to prevent metal-to-metal contact. Install three silencers on strike jamb of single-door frames and two silencers on head of frames for pairs of doors.

G. Entrance Doors: Reinforce doors as required for installing entrance door hardware.

1. At pairs of exterior doors, provide sliding-type weather stripping retained in adjustable strip and mortised into door edge.
2. At exterior doors, provide weather sweeps applied to door bottoms.

H. Entrance Door Hardware Installation: Factory install entrance door hardware to the greatest extent possible. Cut, drill, and tap for factory-installed entrance door hardware before applying finishes.

I. After fabrication, clearly mark components to identify their locations in Project according to Shop Drawings.

2.10 ALUMINUM FINISHES

A. Clear Anodic Finish: AAMA 611, AA-M12C22A41, Class I, 0.018 mm or thicker.

2.11 SOURCE QUALITY CONTROL

A. Structural Sealant: Perform quality-control procedures complying with ASTM C 1401 recommendations including, but not limited to, assembly material qualification procedures, sealant testing, and assembly fabrication reviews and checks.

PART 3 - EXECUTION

3.1 EXAMINATION

A. Examine areas, with Installer present, for compliance with requirements for installation tolerances and other conditions affecting performance of the Work.

B. Proceed with installation only after unsatisfactory conditions have been corrected.

3.2 PREPARATION

A. Prepare surfaces that are in contact with structural sealant according to sealant manufacturer's written instructions to ensure compatibility and adhesion. Preparation includes, but is not limited to, cleaning and priming surfaces.

3.3 INSTALLATION

A. General:

1. Comply with manufacturer's written instructions.
2. Do not install damaged components.
3. Fit joints to produce hairline joints free of burrs and distortion.
4. Rigidly secure nonmovement joints.
5. Install anchors with separators and isolators to prevent metal corrosion and electrolytic deterioration and to prevent impeding movement of moving joints.
6. Seal perimeter and other joints watertight unless otherwise indicated.

B. Metal Protection:

1. Where aluminum is in contact with dissimilar metals, protect against galvanic action by painting contact surfaces with materials recommended by manufacturer for this purpose or by installing nonconductive spacers.
2. Where aluminum is in contact with concrete or masonry, protect against corrosion by painting contact surfaces with bituminous paint.

C. Set continuous sill members and flashing in full sealant bed as specified in Section 079200 "Joint Sealants" to produce weathertight installation.

D. Install components plumb and true in alignment with established lines and grades.

E. Install operable units level and plumb, securely anchored, and without distortion. Adjust weather-stripping contact and hardware movement to produce proper operation.

F. Install glazing as specified in Section 088000 "Glazing."

G. Install weatherseal sealant according to Section 079200 "Joint Sealants" and according to sealant manufacturer's written instructions to produce weatherproof joints. Install joint filler behind sealant as recommended by sealant manufacturer.

H. Entrance Doors: Install doors to produce smooth operation and tight fit at contact points.

1. Exterior Doors: Install to produce weathertight enclosure and tight fit at weather stripping.
2. Field-Installed Entrance Door Hardware: Install surface-mounted entrance door hardware according to entrance door hardware manufacturers' written instructions using concealed fasteners to greatest extent possible.

3.4 ERECTION TOLERANCES

A. Erection Tolerances: Install aluminum-framed entrances and storefronts to comply with the following maximum tolerances:

1. Plumb: 1/8 inch in 10 feet (3.2 mm in 3 m); 1/4 inch in 40 feet (6.35 mm in 12.2 m).

2. Level: 1/8 inch in 20 feet (3.2 mm in 6 m); 1/4 inch in 40 feet (6.35 mm in 12.2 m).
3. Alignment:

    a. Where surfaces abut in line or are separated by reveal or protruding element up to 1/2 inch (12.7 mm) wide, limit offset from true alignment to 1/16 inch (1.6 mm).
    b. Where surfaces are separated by reveal or protruding element from 1/2 to 1 inch (12.7 to 25.4 mm) wide, limit offset from true alignment to 1/8 inch (3.2 mm).
    c. Where surfaces are separated by reveal or protruding element of 1 inch (25.4 mm) wide or more, limit offset from true alignment to 1/4 inch (6 mm).

4. Location: Limit variation from plane to 1/8 inch in 12 feet (3.2 mm in 3.6 m); 1/2 inch (12.7 mm) over total length.

END OF SECTION 084113

SECTION 084413 - GLAZED ALUMINUM CURTAIN WALLS

PART 1 - GENERAL

1.1 RELATED DOCUMENTS

A. Drawings and general provisions of the Contract, including General and Supplementary Conditions and Division 01 Specification Sections, apply to this Section.

1.2 SUMMARY

A. Section includes glazed aluminum curtain walls.

B. Related Requirements:

1. Section 04200 "Unit Masonry" for adjacent surfaces.
2. Section 084113 “Aluminum Framed Entrances and Storefronts”
3. Section 087100 “Door Hardware”
4. Section 088000 “Glazing”

1.3 ACTION SUBMITTALS

A. Product Data: For each type of product.

1. Include construction details, material descriptions, dimensions of individual components and profiles, and finishes.

B. Shop Drawings: For glazed aluminum curtain walls. Include plans, elevations, sections, full-size details, and attachments to other work.

1. Include details of provisions for assembly expansion and contraction and for draining moisture occurring within the assembly to the exterior.
2. Include full-size isometric details of each vertical-to-horizontal intersection of glazed aluminum curtain walls, showing the following:

   a. Joinery, including concealed welds.
   b. Anchorage.
   c. Expansion provisions.
   d. Glazing.
   e. Flashing and drainage.

3. Show connection to and continuity with adjacent thermal, weather, air, and vapor barriers.

C. Samples for Initial Selection: For units with factory-applied color finishes.

D. Samples for Verification: For each type of exposed finish required, in manufacturer's standard sizes.

E. Fabrication Sample: Of each vertical-to-horizontal intersection of assemblies, made from 12-inch (300-mm) lengths of full-size components and showing details of the following:

1. Joinery, including concealed welds. – see drawings for location to be assembled
2. Glazing.

F. Delegated-Design Submittal: For glazed aluminum curtain walls indicated to comply with performance requirements and design criteria, including analysis data signed and sealed by the qualified professional engineer responsible for their preparation.

1.4 INFORMATIONAL SUBMITTALS

A. Sample Warranties: For special warranties.

1.5 CLOSEOUT SUBMITTALS

A. Maintenance Data: For glazed aluminum curtain walls to include in maintenance manuals.

B. Maintenance Data for Structural Sealant: For structural-sealant-glazed curtain walls to include in maintenance manuals. Include ASTM C 1401 recommendations for post-installation-phase quality-control program.

1.6 QUALITY ASSURANCE

A. Installer Qualifications: An entity that employs installers and supervisors who are trained and approved by manufacturer.

B. Testing Agency Qualifications: Qualified according to ASTM E 699 for testing indicated and accredited by IAS or ILAC Mutual Recognition Arrangement as complying with ISO/IEC 17025.

C. Product Options: Information on Drawings and in Specifications establishes requirements for aesthetic effects and performance characteristics of assemblies. Aesthetic effects are indicated by dimensions, arrangements, alignment, and profiles of components and assemblies as they relate to sightlines, to one another, and to adjoining construction.

1. Do not change intended aesthetic effects, as judged solely by Architect, except with Architect's approval. If changes are proposed, submit comprehensive explanatory data to Architect for review.

D. Structural-Sealant Glazing: Comply with ASTM C 1401 for design and installation of curtain wall assemblies.

1.7 WARRANTY

A. Special Assembly Warranty: Manufacturer and Installer agree to repair or replace components of glazed aluminum curtain wall that do not comply with requirements or that fail in materials or workmanship within specified warranty period.

1. Failures include, but are not limited to, the following:

a. Structural failures including, but not limited to, excessive deflection.
b. Noise or vibration created by wind and thermal and structural movements.
c. Deterioration of metals[, metal finishes,] and other materials beyond normal weathering.
d. Water penetration through fixed glazing and framing areas.

e. Failure of operating components.

2. Warranty Period: 10 years from date of Substantial Completion.

B. Special Finish Warranty: Standard form in which manufacturer agrees to repair finishes or replace aluminum that shows evidence of deterioration of factory-applied finishes within specified warranty period.

1. Deterioration includes, but is not limited to, the following:

a. Color fading more than 5 Hunter units when tested according to ASTM D 2244.
b. Chalking in excess of a No. 8 rating when tested according to ASTM D 4214.
c. Cracking, checking, peeling, or failure of paint to adhere to bare metal.

2. Warranty Period: 20 years from date of Substantial Completion.

PART 2 - PRODUCTS

2.1 PERFORMANCE REQUIREMENTS

A. Delegated Design: Engage a professional engineer licensed in Delaware to design glazed aluminum curtain walls.

B. General Performance: Comply with performance requirements specified, as determined by testing of glazed aluminum curtain walls representing those indicated for this Project without failure due to defective manufacture, fabrication, installation, or other defects in construction.

1. Glazed aluminum curtain walls shall withstand movements of supporting structure including, but not limited to, story drift, twist, column shortening, long-term creep, and deflection from uniformly distributed and concentrated live loads.
2. Failure also includes the following:

a. Thermal stresses transferring to building structure.
b. Glass breakage.
c. Noise or vibration created by wind and thermal and structural movements.
d. Loosening or weakening of fasteners, attachments, and other components.
e. Failure of operating units.

C. Structural Loads:

1. Wind Loads: As indicated on Drawings.
2. Other Design Loads: As indicated on Drawings.

D. Deflection of Framing Members: At design wind pressure, as follows:

1. Deflection Normal to Wall Plane: Limited to 1/175 of clear span for spans up to 13 feet 6 inches (4.1 m) and to 1/240 of clear span plus 1/4 inch (6.35 mm) for spans greater than 13 feet 6 inches (4.1 m) or an amount that restricts edge deflection of individual glazing lites to 3/4 inch (19.1 mm), whichever is less.
2. Deflection Parallel to Glazing Plane: Limited to 1/360 of clear span or 1/8 inch (3.2 mm), whichever is smaller.

a. Operable Units: Provide a minimum 1/16-inch (1.6-mm) clearance between framing members and operable units.

3. Cantilever Deflection: Where framing members overhang an anchor point, as follows:

a. Perpendicular to Plane of Wall: No greater than 1/240 of clear span plus 1/4-inch (6. 35-mm) for spans greater than 11 feet 8-1/4 inches (3.6 m) or 1/175 times span, for spans less than 11 feet 8-1/4 inches (3.6 m).

E. Structural: Test according to ASTM E 330 as follows:

1. When tested at positive and negative wind-load design pressures, assemblies do not evidence deflection exceeding specified limits.
2. When tested at 150 percent of positive and negative wind-load design pressures, assemblies, including anchorage, do not evidence material failures, structural distress, or permanent deformation of main framing members exceeding 0.2 percent of span.
3. Test Durations: As required by design wind velocity, but not less than 10 seconds.

F. Air Infiltration: Test according to ASTM E 283 for infiltration as follows:

1. Fixed Framing and Glass Area:

a. Maximum air leakage of 0.06 cfm/sq. ft. at a static-air-pressure differential of 1.57 lbf/sq. ft.

G. Water Penetration under Static Pressure: Test according to ASTM E 331 as follows:

1. No evidence of water penetration through fixed glazing and framing areas when tested according to a minimum static-air-pressure differential of 20 percent of positive wind-load design pressure, but not less than 6.24 lbf/sq. ft.

H. Water Penetration under Dynamic Pressure: Test according to AAMA 501.1 as follows:

1. No evidence of water penetration through fixed glazing and framing areas when tested at dynamic pressure equal to 20 percent of positive wind-load design pressure, but not less than 6.24 lbf/sq. ft.
2. Maximum Water Leakage: According to AAMA 501.1 No uncontrolled water penetrating assemblies or water appearing on assemblies' normally exposed interior surfaces from sources other than condensation. Water leakage does not include water controlled by flashing and gutters, or water that is drained to exterior.

I. Energy Performance: Certify and label energy performance according to NFRC as follows:

1. Thermal Transmittance (U-factor): Fixed glazing and framing areas shall have U-factor of not more than 0.45 Btu/sq. ft. x h x deg F as determined according to NFRC 100.
2. Solar Heat Gain Coefficient: Fixed glazing and framing areas shall have a solar heat gain coefficient of no greater than 0.35 as determined according to NFRC 200.
3. Condensation Resistance: Fixed glazing and framing areas shall have an NFRC-certified condensation resistance rating of no less than 35 as determined according to NFRC 500.

J. Thermal Movements: Allow for thermal movements resulting from ambient and surface temperature changes:

1. Temperature Change: 120 deg F (67 deg C), ambient; 180 deg F (100 deg C), material surfaces.
2. Thermal Cycling: No buckling; stress on glass; sealant failure; excess stress on framing, anchors, and fasteners; or reduction of performance when tested according to AAMA 501.5.

a. High Exterior Ambient-Air Temperature: That which produces an exterior metal-surface temperature of 180 deg F.
b. Low Exterior Ambient-Air Temperature: 0 deg F.

K. Structural-Sealant Joints:

1. Designed to carry gravity loads of glazing.
2. Designed to produce tensile or shear stress of less than 20 psi (138 kPa).

L. Structural Sealant: Capable of withstanding tensile and shear stresses imposed by structural-sealant-glazed curtain walls without failing adhesively or cohesively. When tested for preconstruction adhesion and compatibility, cohesive failure of sealant shall occur before adhesive failure.

1. Adhesive failure occurs when sealant pulls away from substrate cleanly, leaving no sealant material behind.
2. Cohesive failure occurs when sealant breaks or tears within itself but does not separate from each substrate because sealant-to-substrate bond strength exceeds sealant's internal strength.

2.2 MANUFACTURERS (CW-#)

A. Manufacturers: Subject to compliance with requirements, provide products by one of the following:

1. YKK AP America Inc.
   a. Curtainwall: YCW 750 OG Series – 2 ½” x 7 ½” System
   b. Butt Glazed Curtainwall: YCW 750 SSG Series – 2 ½” x 7 ½” System
      1) Modify mullion at transition to curtainwall as required per manufacturers written instructions.

2. Kawneer North America. –
   a. Curtainwall: 1600 Wall System 1 – 2 ½” x 7 ½” System
   b. Butt Glazed Curtainwall: 1600 Wall System 2 – 2 ½” x 7 ½” System
      1) Modify mullion at transition to curtainwall as required per manufacturers written instructions.

3. Oldcastle Building Envelope–
   a. Curtainwall: Reliance 1” System Captured – 2 ½” x 7 ¼” System
   b. Butt Glazed Curtainwall: Reliance 1” System SSG Verticals – 2 ½” x 7 ¼” System
      1) Modify mullion at transition to curtainwall as required per manufacturers written instructions.

B. Source Limitations: Obtain all components of curtain wall system, including framing spandrel panels, venting windows, entrances, sun control, and accessories, from single manufacturer.

2.3 FRAMING

A. Framing Members: Manufacturer's extruded- or formed-aluminum framing members of thickness required and reinforced as required to support imposed loads.

1. Construction: Thermally improved.
2. Glazing System:
   Type 1: Retained mechanically with gaskets on four sides and
   Type 2: Retained mechanically with gaskets on two sides and structural sealant on two sides.
3. Glazing Plane: Front.

4. Finish: Clear anodic finish.
5. Fabrication Method: Field-fabricated stick system.

B. Pressure Caps: Manufacturer's standard aluminum components that mechanically retain glazing.

1. Include snap-on aluminum trim that conceals fasteners.
   a. Provide 4” vertical pressure caps at CW-3 (Art Room)

C. Brackets and Reinforcements: Manufacturer's standard high-strength aluminum with nonstaining, nonferrous shims for aligning system components.

D. Materials:

1. Aluminum: Alloy and temper recommended by manufacturer for type of use and finish indicated.

   a. Sheet and Plate: ASTM B 209 (ASTM B 209M).
   b. Extruded Bars, Rods, Profiles, and Tubes: ASTM B 221 (ASTM B 221M).
   c. Extruded Structural Pipe and Tubes: ASTM B 429/B 429M.
   d. Structural Profiles: ASTM B 308/B 308M.

2. Steel Reinforcement: Manufacturer's standard zinc-rich, corrosion-resistant primer complying with SSPC-PS Guide No. 12.00; applied immediately after surface preparation and pretreatment. Select surface preparation methods according to recommendations in SSPC-SP COM, and prepare surfaces according to applicable SSPC standard.

   a. Structural Shapes, Plates, and Bars: ASTM A 36/A 36M.
   b. Cold-Rolled Sheet and Strip: ASTM A 1008/A 1008M.
   c. Hot-Rolled Sheet and Strip: ASTM A 1011/A 1011M.

2.4 VENTING WINDOWS

A. Aluminum Windows: AAMA/WDMA/CSA 101/I.S.2/A440, manufacturer's standard, with self-flashing mounting fins, and as follows:

1. Window Type: Awning
2. Minimum Performance Class: AW.
3. Minimum Performance Grade: 40
4. Aluminum Extrusions: ASTM B 221 (ASTM B 221M), alloy and temper recommended by manufacturer for strength, corrosion resistance, and application of required finish, but not less than 0.064-inch (1.63-mm) thickness at any location for main frame and sash members.

   a. Thermally Improved Construction: Fabricate window units with an integral, concealed, low-conductance thermal barrier; located between exterior materials and window members exposed on interior side; in a manner that eliminates direct metal-to-metal contact.

5. Mullions: Between adjacent windows, fabricated of extruded aluminum matching finish of window units.
6. Fasteners, Anchors, and Clips: Nonmagnetic stainless steel, aluminum, or other noncorrosive material, compatible with aluminum window members, trim, hardware, anchors, and other components of window units. Fasteners shall not be exposed, except for attaching hardware.

   a. Reinforcement: Where fasteners screw-anchor into aluminum less than 0.128 inch (3.26 mm) thick, reinforce interior with aluminum or nonmagnetic stainless steel to receive screw threads, or provide standard, noncorrosive, pressed-in, spline grommet nuts.

7. Projected Window Hardware (Awning):
   a. Gear-Type Rotary Operators: Complying with AAMA 901 when tested according to ASTM E 405, Method A. Provide operators that function without requiring the removal of interior screens or using screen wickets.
      1) Type and Style: As selected by Architect from manufacturer's full range of types and styles.
   b. Hinges: Non-friction type, not less than two per sash.
   c. Lock: Lever handle and cam-action lock with keeper.

8. Insect Screens: Provide removable insect screen on each operable exterior sash, with screen frame finished to match window unit, complying with SMA 1004 or SMA 1201, and as follows:

   a. Aluminum Wire Fabric: 18-by-18 (1.1-by-1.1-mm), 18-by-16 (1.1-by-1.3-mm), or 18-by-14 (1.1-by-1.5-mm) mesh of 0.013-inch- (0.3-mm-) diameter, coated aluminum wire.

B. Glazing: Same as adjacent glazed aluminum curtain-wall glazing.

C. Finish: Match adjacent glazed aluminum curtain-wall finish.

2.5 ENTRANCES

A. Entrances: Comply with Section 084113 "Aluminum-Framed Entrances and Storefronts."

2.6 GLAZING

A. Glazing: Comply with Section 088000 "Glazing."

B. Glazing Gaskets: Manufacturer's standard sealed-corner pressure-glazing system of black, resilient elastomeric glazing gaskets, setting blocks, and shims or spacers. Comply with Section 088000 "Glazing."

C. Glazing Sealants: As recommended by manufacturer. Comply with Section 088000 "Glazing."

D. Structural Glazing Sealants: ASTM C 1184, chemically curing silicone formulation that is compatible with system components with which it comes in contact, specifically formulated and tested for use as structural sealant and approved by structural-sealant manufacturer for use in curtain-wall assembly indicated.

   1. Color: As selected by Architect from manufacturer's full range of colors.

E. Weatherseal Sealants: ASTM C 920 for Type S; Grade NS; Class 25; Uses NT, G, A, and O; chemically curing silicone formulation that is compatible with structural sealant and other system components with which it comes in contact; recommended by structural-sealant, weatherseal-sealant, and structural-sealant-glazed curtain-wall manufacturers for this use.

   1. Color: Match structural sealant.

2.7 ACCESSORIES

A. Fasteners and Accessories: Manufacturer's standard corrosion-resistant, nonstaining, nonbleeding fasteners and accessories compatible with adjacent materials.

1. Use self-locking devices where fasteners are subject to loosening or turning out from thermal and structural movements, wind loads, or vibration.
2. Reinforce members as required to receive fastener threads.
3. Use exposed fasteners with countersunk Phillips screw heads, finished to match framing system.

B. Anchors: Three-way adjustable anchors with minimum adjustment of 1 inch that accommodate fabrication and installation tolerances in material and finish compatible with adjoining materials and recommended by manufacturer.

1. Concrete and Masonry Inserts: Hot-dip galvanized cast-iron, malleable-iron, or steel inserts complying with ASTM A 123/A 123M or ASTM A 153/A 153M requirements.

C. Concealed Flashing: Manufacturer's standard corrosion-resistant, nonstaining, nonbleeding flashing compatible with adjacent materials.

D. Bituminous Paint: Cold-applied asphalt-mastic paint complying with SSPC-Paint 12 requirements except containing no asbestos, formulated for 30-mil (0.762-mm) thickness per coat.

2.8 FABRICATION

A. Form or extrude aluminum shapes before finishing.

B. Weld in concealed locations to greatest extent possible to minimize distortion or discoloration of finish. Remove weld spatter and welding oxides from exposed surfaces by descaling or grinding.

C. Fabricate components that, when assembled, have the following characteristics:

1. Profiles that are sharp, straight, and free of defects or deformations.
2. Accurately fitted joints with ends coped or mitered.
3. Physical and thermal isolation of glazing from framing members.
4. Accommodations for thermal and mechanical movements of glazing and framing to maintain required glazing edge clearances.
5. Provisions for field replacement of glazing from exterior.
6. Fasteners, anchors, and connection devices that are concealed from view to greatest extent possible.

D. Fabricate components to resist water penetration as follows:

1. Internal guttering system or other means to drain water passing joints, condensation occurring within framing members, and moisture migrating within glazed aluminum curtain wall to exterior.
2. Pressure-equalized system or double barrier design with primary air and vapor barrier at interior side of glazed aluminum curtain wall and secondary seal weeped and vented to exterior.

E. Curtain-Wall Framing: Fabricate components for assembly using shear-block system.

F. After fabrication, clearly mark components to identify their locations in Project according to Shop Drawings.

2.9 ALUMINUM FINISHES

A. Clear Anodic Finish: AAMA 611, AA-M12C22A41, Class I, 0.018 mm or thicker.

2.10 SOURCE QUALITY CONTROL

A. Structural Sealant: Perform quality-control procedures complying with ASTM C 1401 recommendations including, but not limited to, assembly material qualification procedures, sealant testing, and assembly fabrication reviews and checks.

PART 3 - EXECUTION

3.1 EXAMINATION

A. Examine areas, with Installer present, for compliance with requirements for installation tolerances and other conditions affecting performance of the Work.

B. Proceed with installation only after unsatisfactory conditions have been corrected.

3.2 PREPARATION

A. Prepare surfaces that will contact structural sealant according to sealant manufacturer's written instructions to ensure compatibility and adhesion. Preparation includes, but is not limited to, cleaning and priming surfaces.

3.3 INSTALLATION

A. General:

1. Comply with manufacturer's written instructions.
2. Do not install damaged components.
3. Fit joints to produce hairline joints free of burrs and distortion.
4. Rigidly secure nonmovement joints.
5. Install anchors with separators and isolators to prevent metal corrosion and electrolytic deterioration and to prevent impeding movement of moving joints.
6. Where welding is required, weld components in concealed locations to minimize distortion or discoloration of finish. Protect glazing surfaces from welding.
7. Seal joints watertight unless otherwise indicated.

B. Metal Protection:

1. Where aluminum is in contact with dissimilar metals, protect against galvanic action by painting contact surfaces with primer, applying sealant or tape, or installing nonconductive spacers as recommended by manufacturer for this purpose.
2. Where aluminum is in contact concrete or masonry, protect against corrosion by painting contact surfaces with bituminous paint.

C. Install components to drain water passing joints, condensation occurring within framing members, and moisture migrating within glazed aluminum curtain wall to exterior.

D. Install components plumb and true in alignment with established lines and grades.

E. Install operable units level and plumb, securely anchored, and without distortion. Adjust weather-stripping contact and hardware movement to produce proper operation.

F. Install glazing as specified in Section 088000 "Glazing."

1. Prepare surfaces that will contact structural sealant according to sealant manufacturer's written instructions to ensure compatibility and adhesion. Preparation includes, but is not limited to, cleaning and priming surfaces.

G. Install weatherseal sealant according to Section 079200 "Joint Sealants" and according to sealant manufacturer's written instructions to produce weatherproof joints. Install joint filler behind sealant as recommended by sealant manufacturer.

3.4 ERECTION TOLERANCES

A. Erection Tolerances: Install glazed aluminum curtain walls to comply with the following maximum tolerances:

1. Plumb: 1/8 inch in 10 feet (3.2 mm in 3 m); 1/4 inch in 40 feet (6.35 mm in 12.2 m).
2. Level: 1/8 inch in 20 feet (3.2 mm in 6 m); 1/4 inch in 40 feet (6.35 mm in 12.2 m).
3. Alignment:

   a. Where surfaces abut in line or are separated by reveal or protruding element up to 1/2 inch (12.7 mm) wide, limit offset from true alignment to 1/16 inch (1.6 mm).
   b. Where surfaces are separated by reveal or protruding element from 1/2 to 1 inch (12.7 to 25.4 mm) wide, limit offset from true alignment to 1/8 inch (3.2 mm).
   c. Where surfaces are separated by reveal or protruding element of 1 inch (25.4 mm) wide or more, limit offset from true alignment to 1/4 inch (6 mm).

4. Location: Limit variation from plane to 1/8 inch in 12 feet (3.2 mm in 3.6 m); 1/2 inch (12.7 mm) over total length.

3.5 FIELD QUALITY CONTROL

A. Testing Agency: Engage a qualified testing agency to perform tests and inspections.

B. Field Quality-Control Testing: See drawings for test area locations

1. Water-Spray Test: Before installation of interior finishes has begun, areas designated by Architect shall be tested according to AAMA 501.2 and shall not evidence water penetration.

   a. Perform a minimum of one test at each of the following locations:
      1) CW-3 – located at Art C125
      2) CW-1 – located at Media Center A115
      3) CW-6 – located at Stair C100A

2. Air Infiltration: ASTM E 783 at 1.5 times the rate specified for laboratory testing in "Performance Requirements" Article but not more than 0.09 cfm/sq. ft. (0.45 L/s per sq. m) at a static-air-pressure differential of 1.57 lbf/sq. ft. (75 Pa).

   a. Perform a minimum of test at each of the following locations:
      1) CW-3 – located at Art C125
      2) CW-1 – located at Media Center A115
      3) CW-6 – located at Stair C100A

3. Water Penetration: ASTM E 1105 at a minimum uniform and cyclic static-air-pressure differential of 0.67 times the static-air-pressure differential specified for laboratory testing in "Performance Requirements" Article, but not less than 6.24 lbf/sq. ft. (300 Pa), and shall not evidence water penetration.

C. Structural-Sealant Adhesion: Test structural sealant according to recommendations in ASTM C 1401, Destructive Test Method A, "Hand Pull Tab (Destructive)," Appendix X2.

1. Test a minimum of two areas on each building facade.
2. Repair installation areas damaged by testing.

D. Glazed aluminum curtain walls will be considered defective if they do not pass tests and inspections.

E. Prepare test and inspection reports.

END OF SECTION 084413

SECTION 084510 – TRANSLUCENT WALL ASSEMBLIES

PART 1 - GENERAL

1.1 RELATED DOCUMENTS

A. Drawings and general provisions of the contract, including general and supplementary conditions in Division 1 Specification sections, applied to this section.

1.2 SUMMARY

A. This section includes furnishing and installation of translucent assembly in gymnasiums.

B. Related Sections: The following sections contain requirements that relate to this section:

1. Division 5, Section "Structural Steel Framing."

1.3 SYSTEM PERFORMANCE REQUIREMENTS

A. General: Provide design, fabrication, and erection of the canopy roof structure as required to make a complete and watertight installation. System to be produced, fabricated, and installed to withstand normal thermal movement, when loading, and impact loading (where applicable) without failure including loss of, or glass breakage, or glazing breakage attributable to the following: defective manufacture, fabrication, and installation; failure of sealants or gaskets to remain watertight and airtight; and deterioration of glazing materials; and other defects in construction.

B. Translucent panels shall consist of 2-3/4" thick factory prefabricated sandwich panels and system, windows, louvers, etc., factory assembled into a single unit (including installation).

1.4 SUBMITTALS

A. General: Submit the following according to conditions of contract and Division 1 Specification sections.

B. Product Data for material.

C. Shop drawings including:

1. Layout and installation details, including relationship to adjacent work.
2. Detailed elevations and sections.
3. Anchors and reinforcement.
4. Glazing details.

D. Structural calculations by structural engineer licensed in the State of Maryland.

E. Samples: The manufacturer shall submit samples of each type of glazing and finish as requested.

F. Test reports to be furnished by sandwich panel system manufacturer in accordance with Division 1, Submittals. The manufacturer shall submit certified test reports made by an independent testing organization for each type and class of panel system. Reports shall verify that the material will meet all performance requirements of this specification. Previously completed test reports will be acceptable if current and indicative of products used on this project. Test reports required are:

1. Flame Spread and Smoke Development (ASTM E-84).
2. Burn Extent (ASTM D-635).
3. Color Difference (ASTM D-2244).
4. Impact Strength (Free Falling Ball Method).

5. Tensile Bond Strength (ASTM C-297) after aging by ASTM D1037.
6. Shear Bond Strength (ASTM D-1002) after 5 aging conditions.
7. Insulation "U" Factor (by NFRC-100); ASTM C-236, E-1432, and C-1199).
8. Daylight Autonomy.

1.5 QUALITY ASSURANCE

A. Single-Source Responsibility: Obtain glazing and panel structure from one source. Manufacturer shall have demonstrated knowledge in applications of exterior skylight systems over the last five (5) years.

B. Manufacturer's and Erector's Qualifications:

1. Quality control inspections and testing conducted at least once each year, shall include manufacturing facilities, sandwich panel components and production sandwich panels for conformance with "Acceptable Criteria for Sandwich Panels" as regulated by the ICBO-BS or equivalent.
2. Materials and products shall be manufactured by a company continuously and regularly employed in the manufacture of specified materials for a period of at least ten (10) consecutive years and which can show evidence of these materials being satisfactorily used on at least six (6) projects of similar size, scope and type within such a period. At least three (3) of the projects shall have been in successful use for ten (10) years or longer.
3. Erection shall be by an installer which has been in the business of erecting specified materials for at least five (5) consecutive years; and can show evidence of satisfactory completion of projects of similar size, scope and type.

C. Performance Requirements: The manufacturer shall be responsible for the configuration and fabrication of the complete skylight panel system.

1.6 DELIVERY, STORAGE, AND HANDLING

A. Protect all materials to comply with manufacturer's directions and as needed to prevent damage to glazing materials and skylight finishes from condensation, temperature changes, direct exposure to sun, or other causes.

1.7 PROJECT CONDITIONS

A. Environmental Conditions: Do not proceed with glazing when ambient substrate temperature conditions are outside the limits permitted by manufacturer.

B. Field Measurements: Check layout by accurate field measurements before fabrication. Show recorded measurements on shop drawings. Complete fabrication schedule with construction progress to avoid delay of the work.

1. Where necessary proceed with fabrication without field measurements and coordinate fabrication tolerances to ensure proper fit.

PART 2 - PRODUCTS

2.1 MANUFACTURERS

A. Available Manufacturers: Subject to compliance with requirements, manufacturers offering exterior translucent covers which may be incorporated in the work include the following:

1. Kalwall Corporation
2. Major Industries

2.2 TRANSLUCENT FACING

A. Translucent faces shall be manufactured from glass fiber reinforced thermostat resins by insulated panel unit system fabricator especially for architectural use. Thermoplastic faces are not acceptable.

B. Weatherability:

1. The full thickness of the exterior face shall not change color more than 3.0 Hunter or CIE Units (DELTA E by ASTM D-2244) after five (5) years outdoor South Florida weathering at 7 degrees facing south, determined by the average of at least three (3) white samples without a protective film or coating to ensure maximum long term color stability.

2. The exterior face shall have a permanent glass erosion barrier to provide maximum long term resistance to reinforcing fiber exposure and shall be warranted against same for 25 years. (Note: For white, crystal, and Kal-Tint). Plastic film overlays are not acceptable.

C. Appearance:

1. The faces shall be uniform in color to prevent splotchy appearance. Faces shall be completely free of ridges and wrinkles which prevent proper surface contact in bonding to the aluminum grid core. Clusters of air bubbles/pinholes which collect moisture and dirt are not acceptable.

2. Exterior face sheets shall be (smooth) .045” thick and crystal in color. Interior face sheets shall be .045” thick and crystal in color. Faces shall not vary more than +/-10% in thickness.

D. Strength: The exterior face sheet shall be uniform in strength and repel an impact equal to (60) ft. lbs. without fracture or tear when impacted by a 3-1/4” diameter, 6.37 lb. free-falling ball, and be resistant to penetration by pencil point or other small, sharp objects.

2.3 (NON-COMBUSTIBLE) GRID CORE

A. Thermally broken grid core to meet values listed in 2.5A.

2.4 ADHESIVE

A. The laminate adhesive shall be heat and pressure type engineered for structural sandwich panel use. Adhesive shall pass testing requirements specified by the International conference of Building Officials "Acceptance Criteria for Sandwich Panel Adhesive". Minimum strength shall be:

1. 750 PSI tensile strength by ASTM C-297 after two (2) exposures to six (6) cycles each of the aging conditions prescribed by ASTM D-1037.

2. Shear strength average of five (5) exposure by ASTM D-1002:

a. 50% Relative Humidity at 73 degrees F: 540 PSI
b. Accelerated Aging by ASTM D-1183: 700 PSI
c. 182 degrees F: 60 PSI
d. Full Cycle Soak: 715 PSI
e. 500 Hour Oxygen Bomb: 1400 PSI

2.5 PANEL CONSTRUCTION

A. Panels shall have a thickness of 2-3/4” with a "U" factor of .023 thermally broken, light transmission of 30%, and shading coefficient of .33.

B. Translucent panels shall be a true sandwich panel of flat fiberglass sheets bonded to a grid core of mechanically interlocking thermally broken I-beams and shall be laminated under a controlled process of heat and pressure.

C. Translucent panel units shall be pre-assembled and sealed at the factory. Panel units should be shipped to the job site in rugged shipping units and shall be ready for erection as units (except for removable components) by Contractor. Field assembly of major components will not be allowed.

D. Grid pattern shall be 24” x 12” nominal and be symmetrical about the horizontal center line of each panel.

E. The adhesive bonding line shall be straight, cover the entire width of the I-beam and have a neat, sharp edge. In order to ensure bonding strength, white spots at intersections of muntins and mullions shall not exceed 4 for each 40 square feet of panel, nor shall they be more than 3/64” in width.

2.6 BATTENS AND PERIMETER CLOSURE SYSTEM

A. Extruded 6063-T6 and 6063-T5 aluminum screw clamp-tite screw type closure system.

B. All battens and perimeter closures to be supplied with 300 series stainless steel screws (excluding final fasteners to the building).

C. All exposed aluminum to be architectural corrosion resistant finish class 1 clear anodized finish complying with AAMA 606.1 or AAMA 608.1.

2.7 FLEXIBLE SEALING TAPE

A. Sealing tape shall be manufacturer's standard pre-applied to closure system at the factory under controlled conditions.

PART 3 - EXECUTION

3.1 PREPARATION

A. General: Comply with manufacturers instructions to prepare substrate to receive skylight system.

3.2 INSTALLATION

A. The skylight shall be completely erected and glazed by the manufacturer authorized installer.

B. All aluminum that comes in contact with dissimilar metal shall receive a protective coating or isolator to prevent electrolytic action.

C. Coordinate with other work by furnishing shop drawings, inserts, and similar items at the appropriate times for proper sequence of construction without delays. Installer must verify dimensions of the supporting structure and other elements which proceed the skylight work before fabrication of the required components, if openings are not ready for measuring it is the responsibility of the General Contractor to hold architectural, structural, and shop drawings dimensions and verify same in writing to skylight contractor to avoid delay in fabrication and installation of panels.

3.3 CLEAN UP

A. Glazing panels shall be cleaned as they are installed and left in scratch-free condition inside and out with all laboring removed.

3.4 FINAL CLEANING AND PROTECTION

A. Subsequent to installation of skylights, clean glazing, framing members, and accessories. No abrasive material shall be used in cleaning of panel surfaces.

END OF SECTION 084510

PART 1 - GENERAL

1.1 RELATED DOCUMENTS

A. Drawings and general provisions of the Contract, including General and Supplementary Conditions and Division 01 Specification Sections, apply to this Section.

1.2 SUMMARY

A. Section includes:

1. Mechanical and electrified door hardware for:

   a. Swinging doors.
   b. Sliding doors.
   c. Gates.

2. Field verification, preparation and modification of existing doors and frames to receive new door hardware.
3. Lead-lining door hardware items required for radiation protection at door openings.

B. Exclusions: Unless specifically listed in hardware sets, hardware is not specified in this section for:

1. Windows
2. Cabinets (casework), including locks in cabinets
3. Signage
4. Toilet accessories
5. Overhead doors

C. Related Sections:

1. Division 01 Section “Alternates” for alternates affecting this section.
2. Division 07 Section “Joint Sealants” for sealant requirements applicable to threshold installation specified in this section.
3. Division 09 sections for touchup finishing or refinishing of existing openings modified by this section.
4. Division 13 Section “Radiation Protection” for requirements for lead-lining for door hardware at openings indicated to receive radiation protection.
5. Division 26 sections for connections to electrical power system and for low-voltage wiring.
6. Division 28 sections for coordination with other components of electronic access control system.

1.3 REFERENCES

A. Fire/Life Safety

1. NFPA - National Fire Protection Association

   a. NFPA 70 – National Electric Code
   b. NFPA 80 - Standard for Fire Doors and Fire Windows
   c. NFPA 101 - Life Safety Code
   d. NFPA 105 - Smoke and Draft Control Door Assemblies

2. State Fire Safety Code.

B. UL - Underwriters Laboratories

1. UL 10B - Fire Test of Door Assemblies
2. UL 10C - Positive Pressure Test of Fire Door Assemblies
3. UL 1784 - Air Leakage Tests of Door Assemblies
4. UL 305 - Panic Hardware

C. Accessibility

1. ADA - Americans with Disabilities Act.
2. ANSI A117.1 - Accessible and Usable Buildings and Facilities.

D. DHI - Door and Hardware Institute

1. Sequence and Format for the Hardware Schedule
2. Recommended Locations for Builders Hardware
3. Key Systems and Nomenclature

E. ANSI - American National Standards Institute

1. ANSI/BHMA A156.1 - A156.29, and ANSI A156.31 - Standards for Hardware and Specialties

1.4 SUBMITTALS

A. General:

1. Submit in accordance with Conditions of Contract and Division 01 requirements.
2. Highlight, encircle, or otherwise specifically identify on submittals deviations from Contract Documents, issues of incompatibility or other issues which may detrimentally affect the Work.
3. Prior to forwarding submittal, comply with procedures for verifying existing door and frame compatibility for new hardware, as specified in PART 3, “EXAMINATION” article, herein.

B. Action Submittals:

1. Product Data: Product data including manufacturers’ technical product data for each item of door hardware, installation instructions, maintenance of operating parts and finish, and other information necessary to show compliance with requirements.
2. Riser and Wiring Diagrams: After final approval of hardware schedule, submit details of electrified door hardware, indicating:

   a. Wiring Diagrams: For power, signal, and control wiring and including:
      1) Details of interface of electrified door hardware and building safety and security systems.
      2) Schematic diagram of systems that interface with electrified door hardware.
      3) Point-to-point wiring.
      4) Risers.

3. Samples for Verification: If requested by Architect, submit production sample or sample installations of each type of exposed hardware unit in finish indicated, and tagged with full description for coordination with schedule.

   a. Samples will be returned to supplier in like-new condition. Units that are acceptable to Architect may, after final check of operations, be incorporated into Work, within limitations of key coordination requirements.

4. Door Hardware Schedule: Submit schedule with hardware sets in vertical format as illustrated by Sequence of Format for the Hardware Schedule as published by the Door and Hardware Institute. Indicate complete designations of each item required for each door or opening, include:

    a. Door Index; include door number, heading number, and Architects hardware set number.
    b. Opening Lock Function Spreadsheet: List locking device and function for each opening.
    c. Type, style, function, size, and finish of each hardware item.
    d. Name and manufacturer of each item.
    e. Fastenings and other pertinent information.
    f. Location of each hardware set cross-referenced to indications on Drawings.
    g. Explanation of all abbreviations, symbols, and codes contained in schedule.
    h. Mounting locations for hardware.
    i. Door and frame sizes and materials.
    j. Name and phone number for local manufacturer's representative for each product.
    k. Operational Description of openings with any electrified hardware (locks, exits, electromagnetic locks, electric strikes, automatic operators, door position switches, magnetic holders or closer/holder units, and access control components). Operational description should include how door will operate on egress, ingress, and fire and smoke alarm connection.
        1) Submittal Sequence: Submit door hardware schedule concurrent with submissions of Product Data, Samples, and Shop Drawings. Coordinate submission of door hardware schedule with scheduling requirements of other work to facilitate fabrication of other work that is critical in Project construction schedule.

5. Key Schedule:

    a. After Keying Conference, provide keying schedule listing levels of keying as well as explanation of key system's function, key symbols used and door numbers controlled.
    b. Use ANSI A156.28 “Recommended Practices for Keying Systems” as guideline for nomenclature, definitions, and approach for selecting optimal keying system.
    c. Provide 3 copies of keying schedule for review prepared and detailed in accordance with referenced DHI publication. Include schematic keying diagram and index each key to unique door designations.
    d. Index keying schedule by door number, keyset, hardware heading number, cross keying instructions, and special key stamping instructions.
    e. Provide one complete bitting list of key cuts and one key system schematic illustrating system usage and expansion.
        1) Forward bitting list, key cuts and key system schematic directly to Owner, by means as directed by Owner.

    f. Prepare key schedule by or under supervision of supplier, detailing Owner’s final keying instructions for locks.

6. Templates: After final approval of hardware schedule, provide templates for doors, frames and other work specified to be factory prepared for door hardware installation.

C. Informational Submittals:

1. Qualification Data: For Supplier, Installer and Architectural Hardware Consultant.
2. Product Certificates for electrified door hardware, signed by manufacturer:

    a. Certify that door hardware approved for use on types and sizes of labeled fire-rated doors complies with listed fire-rated door assemblies.

3. Certificates of Compliance:

a. Certificates of compliance for fire-rated hardware and installation instructions if requested by Architect or Authority Having Jurisdiction.
b. Installer Training Meeting Certification: Letter of compliance, signed by Contractor, attesting to completion of installer training meeting specified in “QUALITY ASSURANCE” article, herein.
c. Electrified Hardware Coordination Conference Certification: Letter of compliance, signed by Contractor, attesting to completion of electrified hardware coordination conference, specified in “QUALITY ASSURANCE” article, herein.

4. Product Test Reports: For compliance with accessibility requirements, based on evaluation of comprehensive tests performed by manufacturer and witnessed by qualified testing agency, for door hardware on doors located in accessible routes.
5. Warranty: Special warranty specified in this Section.

D. Closeout Submittals:

1. Operations and Maintenance Data : Provide in accordance with Division 01 and include:

a. Complete information on care, maintenance, and adjustment; data on repair and replacement parts, and information on preservation of finishes.
b. Catalog pages for each product.
c. Name, address, and phone number of local representative for each manufacturer.
d. Parts list for each product.
e. Final approved hardware schedule, edited to reflect conditions as-installed.
f. Final keying schedule
g. Copies of floor plans with keying nomenclature
h. As-installed wiring diagrams for each opening connected to power, both low voltage and 110 volts.
i. Copy of warranties including appropriate reference numbers for manufacturers to identify project.

1.5 QUALITY ASSURANCE

A. Product Substitutions: Comply with product requirements stated in Division 01 and as specified herein.

1. Where specific manufacturer’s product is named and accompanied by “No Substitute,” including make or model number or other designation, provide product specified. (Note: Certain products have been selected for their unique characteristics and particular project suitability.)

a. Where no additional products or manufacturers are listed in product category, requirements for “No Substitute” govern product selection.

2. Where products indicate “acceptable substitute” or “acceptable manufacturer”, provide product from specified manufacturers, subject to compliance with specified requirements and “Single Source Responsibility” requirements stated herein.

B. Supplier Qualifications and Responsibilities: Recognized architectural hardware supplier with record of successful in-service performance for supplying door hardware similar in quantity, type, and quality to that indicated for this Project and that provides certified Architectural Hardware Consultant (AHC) available to Owner, Architect, and Contractor, at reasonable times during the Work for consultation.

1. Warehousing Facilities: In Project's vicinity.
2. Scheduling Responsibility: Preparation of door hardware and keying schedules.
3. Engineering Responsibility: Preparation of data for electrified door hardware, including Shop Drawings, based on testing and engineering analysis of manufacturer's standard units in assemblies similar to those indicated for this Project.

4. Coordination Responsibility: Coordinate installation of electronic security hardware with Architect and electrical engineers and provide installation and technical data to Architect and other related subcontractors.

    a. Upon completion of electronic security hardware installation, inspect and verify that all components are working properly.

C. Installer Qualifications: Qualified tradesmen, skilled in application of commercial grade hardware with record of successful in-service performance for installing door hardware similar in quantity, type, and quality to that indicated for this Project.

D. Architectural Hardware Consultant Qualifications: Person who is experienced in providing consulting services for door hardware installations that are comparable in material, design, and extent to that indicated for this Project and meets these requirements:

1. For door hardware, DHI-certified, Architectural Hardware Consultant (AHC).
2. Can provide installation and technical data to Architect and other related subcontractors.
3. Can inspect and verify components are in working order upon completion of installation.
4. Capable of producing wiring diagrams.
5. Capable of coordinating installation of electrified hardware with Architect and electrical engineers.

E. Single Source Responsibility: Obtain each type of door hardware from single manufacturer.

1. Provide electrified door hardware from same manufacturer as mechanical door hardware, unless otherwise indicated.
2. Manufacturers that perform electrical modifications and that are listed by testing and inspecting agency acceptable to authorities having jurisdiction are acceptable.

F. Fire-Rated Door Openings: Provide door hardware for fire-rated openings that complies with NFPA 80 and requirements of authorities having jurisdiction. Provide only items of door hardware that are listed and are identical to products tested by Underwriters Laboratories, Intertek Testing Services, or other testing and inspecting organizations acceptable to authorities having jurisdiction for use on types and sizes of doors indicated, based on testing at positive pressure and according to NFPA 252 or UL 10C and in compliance with requirements of fire-rated door and door frame labels.

G. Smoke- and Draft-Control Door Assemblies: Where smoke- and draft-control door assemblies are required, provide door hardware that meets requirements of assemblies tested according to UL 1784 and installed in compliance with NFPA 105.

1. Air Leakage Rate: Maximum air leakage of 0.3 cfm/sq. ft. (3 cu. m per minute/sq. m) at tested pressure differential of 0.3-inch wg (75 Pa) of water.

H. Electrified Door Hardware: Listed and labeled as defined in NFPA 70, Article 100, by testing agency acceptable to authorities having jurisdiction.

I. Means of Egress Doors: Latches do not require more than 15 lbf (67 N) to release latch. Locks do not require use of key, tool, or special knowledge for operation.

J. Accessibility Requirements: For door hardware on doors in an accessible route, comply with governing accessibility regulations cited in “REFERENCES” article, herein.

1. Provide operating devices that do not require tight grasping, pinching, or twisting of wrist and that operate with force of not more than 5 lbf (22.2 N).
2. Maximum opening-force requirements:

a. Interior, Non-Fire-Rated Hinged Doors: 5 lbf (22.2 N) applied perpendicular to door.
b. Sliding or Folding Doors: 5 lbf (22.2 N) applied parallel to door at latch.
c. Fire Doors: Minimum opening force allowable by authorities having jurisdiction.

3. Bevel raised thresholds with slope of not more than 1:2. Provide thresholds not more than 1/2 inch (13 mm) high.
4. Adjust door closer sweep periods so that, from open position of 70 degrees, door will take at least 3 seconds to move to 3 inches (75 mm) from latch, measured to leading edge of door.

K. Keying Conference: Conduct conference at Project site to comply with requirements in Division 01.

1. Attendees: Owner, Contractor, Architect, Installer, Owner's security consultant, and Supplier's Architectural Hardware Consultant.
2. Incorporate keying conference decisions into final keying schedule after reviewing door hardware keying system including:

a. Function of building, flow of traffic, purpose of each area, degree of security required, and plans for future expansion.
b. Preliminary key system schematic diagram.
c. Requirements for key control system.
d. Requirements for access control.
e. Address for delivery of keys.

L. Pre-installation Conference: Conduct conference at Project site

1. Review and finalize construction schedule and verify availability of materials, Installer's personnel, equipment, and facilities needed to make progress and avoid delays.
2. Inspect and discuss preparatory work performed by other trades.
3. Inspect and discuss electrical roughing-in for electrified door hardware.
4. Review sequence of operation for each type of electrified door hardware.
5. Review required testing, inspecting, and certifying procedures.

M. Coordination Conferences:

1. Installation Coordination Conference: Prior to hardware installation, schedule and hold meeting to review questions or concerns related to proper installation and adjustment of door hardware.

a. Attendees: Door hardware supplier, door hardware installer, Contractor.
b. After meeting, provide letter of compliance to Architect, indicating when meeting was held and who was in attendance.

2. Electrified Hardware Coordination Conference: Prior to ordering electrified hardware, schedule and hold meeting to coordinate door hardware with security, electrical, doors and frames, and other related suppliers.

a. Attendees: electrified door hardware supplier, doors and frames supplier, electrified door hardware installer, electrical subcontractor, Owner, Owner's security consultant, Architect and Contractor.
b. After meeting, provide letter of compliance to Architect, indicating when coordination conference was held and who was in attendance.

1.6 DELIVERY, STORAGE, AND HANDLING

A. Inventory door hardware on receipt and provide secure lock-up for hardware delivered to Project site.

B. Tag each item or package separately with identification coordinated with final door hardware schedule, and include installation instructions, templates, and necessary fasteners with each item or package.

1. Deliver each article of hardware in manufacturer’s original packaging.

C. Project Conditions:

1. Maintain manufacturer-recommended environmental conditions throughout storage and installation periods.
2. Provide secure lock-up for door hardware delivered to Project, but not yet installed. Control handling and installation of hardware items so that completion of Work will not be delayed by hardware losses both before and after installation.

D. Protection and Damage:

1. Promptly replace products damaged during shipping.
2. Handle hardware in manner to avoid damage, marring, or scratching. Correct, replace or repair products damaged during Work.
3. Protect products against malfunction due to paint, solvent, cleanser, or any chemical agent.

E. Deliver keys to manufacturer of key control system for subsequent delivery to Owner.

F. Deliver keys and permanent cores to Owner by registered mail or overnight package service.

1.7 COORDINATION

A. Coordinate layout and installation of floor-recessed door hardware with floor construction. Cast anchoring inserts into concrete. Concrete, reinforcement, and formwork requirements are specified in Division 03.

B. Installation Templates: Distribute for doors, frames, and other work specified to be factory prepared. Check Shop Drawings of other work to confirm that adequate provisions are made for locating and installing door hardware to comply with indicated requirements.

C. Security: Coordinate installation of door hardware, keying, and access control with Owner's security consultant.

D. Electrical System Roughing-In: Coordinate layout and installation of electrified door hardware with connections to power supplies and building safety and security systems.

E. Existing Openings: Where hardware components are scheduled for application to existing construction or where modifications to existing door hardware are required, field verify existing conditions and coordinate installation of door hardware to suit opening conditions and to provide proper door operation.

F. Direct shipments not permitted, unless approved by Contractor.

1.8 WARRANTY

A. Special Warranty: Manufacturer's standard form in which manufacturer agrees to repair or replace components of door hardware that fail in materials or workmanship within specified warranty period.

1. Warranty Period: Years from date of Substantial Completion, for durations indicated.

a. Closers:
   1) Mechanical: 10 years.
   2) Electrified: 2 years.

b. Exit Devices:
   1) Mechanical: 3 years.
   2) Electrified: 1 year.

c. Locksets:
   1) Mechanical: 3 years.
   2) Electrified: 1 year.

d. Continuous Hinges: Lifetime warranty.
e. Key Blanks: Lifetime

2. Warranty does not cover damage or faulty operation due to improper installation, improper use or abuse.

1.9 MAINTENANCE

A. Maintenance Tools:

1. Furnish complete set of special tools required for maintenance and adjustment of hardware, including changing of cylinders.

PART 2 - PRODUCTS

2.1 MANUFACTURERS

A. The Owner requires use of certain products for their unique characteristics and particular project suitability to insure continuity of existing and future performance and maintenance standards. After investigating available product offerings Awarding Authority has elected to prepare proprietary specifications. These products are specified with the notation: “No Substitute.”

1. Where “No Substitute” is noted, submittals and substitution requests for other products will not be considered.

B. Approval of manufacturers other than those listed shall be in accordance with QUALITY ASSURANCE article, herein.

C. Approval of products from manufacturers indicated as “Acceptable Manufacturer” is contingent upon those products providing all functions and features and meeting all requirements of scheduled manufacturer’s product.

Item	Scheduled Manufacturer	Acceptable Manufacturer
Hinges	Ives (IVE)	Hager, Stanley
Continuous Hinges	Ives (IVE)	Markar, Stanley
Electric Power Transfer	Von Duprin (VON)	ABH, Falcon
Flush Bolts & Coordinators	Ives (IVE)	Burns, Rockwood
Locksets & Deadlocks	Schlage (SCH)	No Substitute
Exit Devices & Mullions	Von Duprin (VON)	No Substitute
Electric Strikes	Von Duprin (VON)	No Substitute
Power Supplies	Schlage Electronics (SCE)	No Substitute

Roller Latches	Ives (IVE)	Burns, Rockwood
Cylinders & Keying	Schlage (SCH)	No Substitute
Door Closers	LCN (LCN)	No Substitute
Door Trim	Ives (IVE)	Burns, Rockwood
Protection Plates	Ives (IVE)	Burns, Rockwood
Overhead Stops	Glynn-Johnson (GLY)	Rixson,
Stops & Holders	Ives (IVE)	Burns, Rockwood
Thresholds & Weatherstrip	National Guard (NAT)	Pemko, Zero
Silencers	Ives (IVE)	Burns, Rockwood
Magnetic Holders	LCN (LCN)	Rixson, Sargent
Door Position Switches	Schlage Electronics (SCE)	GE, Sargent
Key Cabinets	Telkee (TEL)	HPC, Lund

D. Hand of Door: Drawings show direction of slide, swing, or hand of each door leaf. Furnish each item of hardware for proper installation and operation of door movement as shown.

E. Where specified hardware is not adaptable to finished shape or size of members requiring hardware, furnish suitable types having same operation and quality as type specified, subject to Architect's approval.

2.2 MATERIALS

A. Fasteners

1. Provide hardware manufactured to conform to published templates, generally prepared for machine screw installation.
2. Furnish screws for installation with each hardware item. Finish exposed (exposed under any condition) screws to match hardware finish, or, if exposed in surfaces of other work, to match finish of this other work including prepared for paint surfaces to receive painted finish.
3. Provide concealed fasteners for hardware units exposed when door is closed except when no standard units of type specified are available with concealed fasteners. Do not use thru-bolts for installation where bolt head or nut on opposite face is exposed in other work unless thru-bolts are required to fasten hardware securely. Review door specification and advise Architect if thru-bolts are required.
4. Install hardware with fasteners provided by hardware manufacturer.

B. Provide screws, bolts, expansion shields, drop plates and other devices necessary for hardware installation.

1. Where fasteners are exposed to view: Finish to match adjacent door hardware material.

2.3 HINGES

A. Provide five-knuckle, ball bearing hinges.

1. Manufacturers and Products:

a. Scheduled Manufacturer and Product: Ives 5BB series.
b. Acceptable Manufacturers and Products: Hager BB series, McKinney TA/T4A series, Stanley FBB Series.

B. Requirements:

1. 1-3/4 inch (44 mm) thick doors, up to and including 36 inches (914 mm) wide:

   a. Exterior: Standard weight, bronze or stainless steel, 4-1/2 inches (114 mm) high
   b. Interior: Standard weight, steel, 4-1/2 inches (114 mm) high

2. 1-3/4 inch (44 mm) thick doors over 36 inches (914 mm) wide:

   a. Exterior: Heavy weight, bronze/stainless steel, 5 inches (127 mm) high
   b. Interior: Heavy weight, steel, 5 inches (127 mm) high

3. 2 inches or thicker doors:

   a. Exterior: Heavy weight, bronze or stainless steel, 5 inches (127 mm) high
   b. Interior: Heavy weight, steel, 5 inches (127 mm) high

4. Provide three hinges per door leaf for doors 90 inches (2286 mm) or less in height, and one additional hinge for each 30 inches (762 mm) of additional door height.
5. Where new hinges are specified for existing doors or existing frames, provide new hinges of identical size to hinge preparation present in existing door or existing frame.
6. Hinge Pins: Except as otherwise indicated, provide hinge pins as follows:

   a. Steel Hinges: Steel pins
   b. Non-Ferrous Hinges: Stainless steel pins
   c. Out-Swinging Exterior Doors: Non-removable pins
   d. Out-Swinging Interior Lockable Doors: Non-removable pins
   e. Interior Non-lockable Doors: Non-rising pins

7. Width of hinges: 4-1/2 inches (114 mm) at 1-3/4 inch (44 mm) thick doors, and 5 inches (127 mm) at 2 inches (51 mm) or thicker doors. Adjust hinge width as required for door, frame, and wall conditions to allow proper degree of opening.
8. Doors 36 inches (914 mm) wide or less furnish hinges 4 ½ inches (114 mm) high; doors greater than 36 inches (914 mm) wide furnish hinges 5 inches (127 mm) high, heavy weight or standard weight as specified.
9. Provide hinges with electrified option where specified. Provide with sufficient number and gage of concealed wires to accommodate electric function of specified hardware. Locate electric hinge at second hinge from bottom or nearest to electrified locking component.
10. Provide mortar guard for each electrified hinge specified, unless specified in hollow metal frame specification.
11. Provide spring hinges where specified. Provide two spring hinges and one bearing hinge per door leaf for doors 90 inches (2286 mm) or less in height. Provide one additional bearing hinge for each 30 inches (762 mm) of additional door height.

2.4 CONTINUOUS HINGES

A. Stainless Steel

1. Manufacturers:

   a. Scheduled Manufacturer: Ives
   b. Acceptable Manufacturers: Markar, Stanley

2. Requirements:

   a. Provide pin and barrel continuous hinges conforming to ANSI A156.26, Grade 2.

b. Provide pin and barrel continuous hinges fabricated from 14 gauge, type 304 stainless steel.
c. Provide twin self-lubricated nylon bearings at each hinge knuckle, with 0.25-inch (6 mm) diameter stainless steel pin.
d. Provide hinges capable of supporting door weights up to 600 pounds, and successfully tested for 1,500,000 cycles.
e. On fire-rated doors, provide pin and barrel continuous hinges that are classified for use on rated doors by testing agency acceptable to authority having jurisdiction.
f. Provide pin and barrel continuous hinges with electrified option where specified. Provide with sufficient number and gage of concealed wires to accommodate electric function of specified hardware.
g. Install hinges with fasteners supplied by manufacturer.
h. Provide hinges with symmetrical hole pattern.

B. Aluminum Geared

1. Manufacturers:

a. Scheduled Manufacturer: Ives.
b. Acceptable Manufacturers: Markar, Stanley.

2. Requirements:

a. Provide aluminum geared continuous hinges conforming to ANSI A156.25, Grade 2.
b. Provide aluminum geared continuous hinges, where specified in the hardware sets, fabricated from 6063-T6 aluminum, with 0.25-inch (6 mm) diameter Teflon coated stainless steel hinge pin.
c. Provide split nylon bearings at each hinge knuckle for quiet, smooth, self-lubricating operation.
d. Provide hinges capable of supporting door weights up to 450 pounds, and successfully tested for 1,500,000 cycles.
e. On fire-rated doors, provide aluminum geared continuous hinges that are classified for use on rated doors by testing agency acceptable to authority having jurisdiction.
f. Provide aluminum geared continuous hinges with electrified option where specified. Provide with sufficient number and gage of concealed wires to accommodate electric function of specified hardware.
g. Install hinges with fasteners supplied by manufacturer.
h. Provide hinges with symmetrical hole pattern.

2.5 ELECTRIC POWER TRANSFER

A. Manufacturers:

a. Scheduled Manufacturer: Von Duprin
b. Acceptable Manufacturers: No Substitute

B. Provide power transfer with number and gage of wires sufficient to accommodate electric function of specified hardware.

C. Locate electric power transfer per manufacturer’s template and UL requirements, unless interference with operation of door or other hardware items.

2.6 FLUSH BOLTS

A. Manufacturers:

1. Scheduled Manufacturer: Ives
2. Acceptable Manufacturers: Burns, Rockwood

B. Requirements:

1. Provide automatic, constant latching, and manual flush bolts with forged bronze or stainless steel face plates, extruded brass levers, and with wrought brass guides and strikes. Provide 12 inch (305 mm) steel or brass rods at doors up to 90 inches (2286 mm) in height. For doors over 90 inches (2286 mm) in height increase top rods by 6 inches (152 mm) for each additional 6 inches (152 mm) of door height. Provide dust-proof strikes at each bottom flush bolt.

2.7 COORDINATORS

A. Manufacturers:

1. Scheduled Manufacturer: Ives
2. Acceptable Manufacturers: Burns, Rockwood

B. Requirements:

1. Where pairs of doors are equipped with automatic flush bolts, an astragal, or other hardware that requires synchronized closing of the doors, provide bar-type coordinating device, surface applied to underside of stop at frame head.
2. Provide filler bar of correct length for unit to span entire width of opening, and appropriate brackets for parallel arm door closers and surface vertical rod exit device strikes. Factory-prep coordinators for vertical rod devices if required.

2.8 MORTISE LOCKS

A. Manufacturers and Products:

1. Scheduled Manufacturer and Product: Schlage L9000 series
2. Acceptable Manufacturers and Products: No Substitute

B. Requirements:

1. Provide mortise locks certified as ANSI A156.13, Grade 1 Operational, Grade 1 Security, and manufactured from heavy gauge steel, containing components of steel with a zinc dichromate plating for corrosion resistance. Provide lock case that is multi-function and field reversible for handing without opening case. Cylinders: Refer to “KEYING” article, herein.
2. Provide locks with standard 2-3/4 inches (70 mm) backset with full 3/4 inch (19 mm) throw stainless steel mechanical anti-friction latchbolt. Provide deadbolt with full 1 inch (25 mm) throw, constructed of stainless steel.
3. Provide standard ASA strikes unless extended lip strikes are necessary to protect trim.
4. Provide electrical options as scheduled. Provide electrified locksets with micro switch (RX) option that monitors retractor crank, and is actuated when rotation of inside or outside lever rotates retractor hub. Provide normally closed contacts or normally open contacts as required by security system.
5. Lever Trim: Solid brass, bronze, or stainless steel, cast or forged in design specified, with wrought roses and external lever spring cages. Provide thru-bolted levers with 2-piece spindles.

    a. Lever Design: Schlage 17A.

2.9 CYLINDRICAL LOCKS – GRADE 1

A. Manufacturers and Products:

1. Scheduled Manufacturer and Product: Schlage ND Series
2. Acceptable Manufacturers and Products: No Substitute

B. Requirements:

1. Provide cylindrical locks conforming to ANSI A156.2 Series 4000, Grade 1. Cylinders: Refer to "KEYING" article, herein.
2. Provide locksets able to withstand 1500 inch pounds of torque applied to locked outside lever without gaining access per ANSI A156.2 Abusive Locked Lever Torque Test and cycle tested to 3 million cycles per ANSI A156.2 Cycle Test.
3. Provide solid steel rotational stops to control excessive rotation of lever.
4. Provide completely refunctionable lockset that allows lock function to be changed to over twenty other common functions by swapping easily accessible parts.
5. Provide locks with standard 2-3/4 inches (70 mm) backset, unless noted otherwise, with 1/2 inch latch throw. Provide proper latch throw for UL listing at pairs.
6. Provide locksets with separate anti-rotation thru-bolts, and no exposed screws.
7. Provide independently operating levers with two external return spring cassettes mounted under roses to prevent lever sag.
8. Provide standard ASA strikes unless extended lip strikes are necessary to protect trim.
9. Provide electrical options as scheduled.
10. Lever Trim: Solid cast levers without plastic inserts, and wrought roses on both sides.

    a. Lever Design: Schlage Sparta.

2.10 AUXILIARY LOCKS

A. Deadlocks:

1. Manufacturers and Products:

    a. Scheduled Manufacturer and Product: Schlage L400 series
    b. Acceptable Manufacturers and Products: No Substitute.

2. Requirements:

    a. Provide mortise deadlock series conforming to ANSI A156 and function as specified. Cylinders: Refer to "KEYING" article, herein.
    b. Provide deadlocks with standard 2-3/4 inches (70 mm) backset. Provide deadbolt with full 1 inch (25 mm) throw, constructed of stainless steel.
    c. Provide manufacturer's standard strike.

2.11 EXIT DEVICES

A. Manufacturer and Product:

1. Von Duprin 98/35 series,
2. Acceptable Manufacturers and Products: No Substitute.

B. Requirements:

1. Provide exit devices tested to ANSI/BHMA A156.3 Grade 1, and UL listed for Panic Exit or Fire Exit Hardware. Cylinders: Refer to "KEYING" article, herein.
2. Provide touchpad type exit devices, fabricated of brass, bronze, stainless steel, or aluminum, plated to standard architectural finishes to match balance of door hardware.
3. Quiet Operation: Incorporate fluid damper or other device that eliminates noise of exit device operation.
4. Touchpad: Extend minimum of one half of door width, but not the full length of exit device rail. Provide end-cap with two-point attachment to door. Match exit device finish, stainless steel for US26, US26D, US28, US32, and US32D finishes; and for all other finishes, provide compatible finish to exit device. Provide compression springs in devices, latches, and outside trims or controls; tension springs prohibited.
5. Provide exit devices with deadlatching feature for security and for future addition of alarm kits and/or other electrical requirements.
6. Concealed Vertical Cable Exit Devices: Cable-actuated concealed vertical latch system in two-point and less bottom latch (LBL) configurations. Vertical rods not permitted.

    a. Cable: Stainless steel core wire in stainless steel with polytetrafluoroethylene (Teflon®) liner color-coded to latches and center slides. Conduit and core wire ends snap into latch and center slides without use of tools.
    b. Latchbolts and Blocking Cams: Manufactured from sintered metal low carbon copper-infiltrated steel, with molybdenum disulfide low friction coating.
    c. Top Latchbolt: Minimum 0.382 inch (10 mm) and greater than 90 degree engagement with strike to prevent door and frame separation under high static load.
    d. Bottom Latchbolt: Minimum of 0.44 inch (11 mm) engagement with strike.
    e. Product Cycle Life: 1,000,000 cycles.
    f. Latch Operation: Top and bottom latch operate independently of each other. Top latch fully engages top strike even when bottom latch is compromised. Separate trigger mechanisms not permitted.
    g. Latch release does not require separate trigger mechanism.
    h. Cable and latching system characteristics:
        1) Assembled prior to being installed in door.
        2) Installed in door as complete assembly.
        3) Installed independently of exit device installation, and capable of functioning on door prior to device and trim installation.
        4) Connected to exit device at single attachment point.
        5) Bottom latch height adjusted from single point, after system is installed and connected to exit device, while door is hanging
        6) Latch position altered up and down 2 inches (51 mm) without additional adjustment.
        7) System may be removed while door is hanging.
        8) Configure latchbolt mounting: double or single tab mount for steel doors, and wood doors, face mount for aluminum doors, eliminating requirement of tabs.
        9) Provide adjustable exit device to latch center line adjustment. Ensures double tab mounting option for top latch, regardless of exit device centerline.

7. Provide exit devices with manufacturer's approved strikes.
8. Provide exit devices cut to door width and height. Locate exit devices at height recommended by exit device manufacturer, allowable by governing building codes, and approved by Architect.
9. Mount mechanism case flush on face of doors, or provide spacers to fill gaps behind devices. Where glass trim or molding projects off face of door, provide glass bead kits.
10. Provide cylinder dogging at non-fire-rated exit devices, unless specified less dogging.
11. Removable Mullions: 2 inches (51 mm) x 3 inches (76 mm) steel tube. Where scheduled as keyed removable mullion that is removed by use of a keyed cylinder, which is self-locking when re-installed.

12. Where lever handles are specified as outside trim for exit devices, provide heavy-duty lever trims with forged or cast escutcheon plates. Provide vandal-resistant levers that will travel to 90-degree down position when more than 35 pounds of torque are applied, and which can easily be re-set.

    a. Lever Style: Match lever style of locksets.
    b. Tactile Warning (Knurling): Where required by authority having jurisdiction. Provide on levers on exterior (secure side) of doors serving rooms considered to be hazardous.

13. Provide UL labeled fire exit hardware for fire rated openings.
14. Provide factory drilled weep holes for exit devices used in full exterior application, highly corrosive areas, and where noted in hardware sets.
15. Provide electrical options as scheduled.

2.12 ELECTRIC STRIKES

A. Manufacturers and Products:

1. Scheduled Manufacturer and Product: Von Duprin 6000 series.
2. Acceptable Manufacturers and Products: No Substitute.

B. Requirements:

1. Provide electric strikes designed for use with type of locks shown at each opening.
2. Provide electric strikes UL Listed as burglary-resistant.
3. Where required, provide electric strikes UL Listed for fire doors and frames.
4. Provide fail-secure type electric strikes, unless specified otherwise.
5. Coordinate voltage and provide transformers and rectifiers for each strike as required.

2.13 POWER SUPPLIES

A. Manufacturers and Products:

1. Scheduled Manufacturer and Product: Schlage Electronics or Von Duprin PS900 series.
2. Acceptable Manufacturers and Products: No Substitute.

B. Requirements:

1. Provide power supplies, recommended and approved by manufacturer of electrified locking component, for operation of electrified locks, electrified exit devices, magnetic locks, electric strikes, and other components requiring power supply.
2. Provide appropriate quantity of power supplies necessary for proper operation of electrified locking components as recommended by manufacturer of electrified locking components with consideration for each electrified component using power supply, location of power supply, and approved wiring diagrams. Locate power supplies as directed by Architect.
3. Provide regulated and filtered 24 VDC power supply, and UL class 2 listed.
4. Options:

    a. Provide power supply, where specified, with internal capability of charging sealed backup batteries 24 VDC, in addition to operating DC load.
    b. Provide sealed batteries for battery back-up at each power supply where specified.
    c. Provide keyed power supply cabinet.

5. Provide power supply in an enclosure, complete, and requiring 120VAC to fused input.

6. Provide power supply with emergency release terminals, where specified, that allow release of all devices upon activation of fire alarm system complete with fire alarm input for initiating “no delay” exiting mode.

2.14 CYLINDERS

A. Manufacturer:

1. Scheduled Manufacturer: Schlage
2. Acceptable Manufacturers and Products: No Substitute.

B. Requirements: Provide cylinders/cores complying with the following requirements.

1. Furnished by same manufacturer as locks.
2. Cylinders/cores compliant with ANSI/BHMA A156.5; latest revision, Section 12, Grade 1; permanent cylinders; cylinder face finished to match lockset, manufacturer’s series as indicated.

C. Full-sized cylinders in the below-listed configuration(s), distributed throughout the Project as indicated.

1. Keying:

D. [Manufacturer-keyed permanent cylinders/cores, configured into existing keying system per “KEYING” article herein.

E. Locksmith-keyed permanent cylinders/cores, configured into existing keying system per “KEYING” article herein.

1. Provide contact information if the Owner or Owners representative are to provide the permanent cylinders and/or cores.
2. Features: Cylinders/cores shall incorporate the following features.

F. Nickel silver bottom pins.

1. Identification:

G. Mark permanent cylinders/cores and keys with applicable blind code per DHI publication “Keying Systems and Nomenclature” for identification. Blind code marks shall not include actual key cuts.

H. Identification stamping provisions must be approved by the Architect and Owner.

I. Failure to comply with stamping requirements shall be cause for replacement of cylinders/cores involved at no additional cost to Owner.

1. Forward cylinders/cores to Owner, separately from keys, by means as directed by Owner.

J. Construction Keying System.

K. 3 construction control keys and extractor tool, if required.

L. 12 construction change (day) keys.

M. Replaceable Construction Cores.

1. Provide temporary construction cores replaceable by permanent cores, furnished in accordance with the following requirements.

N. 12 construction change (day) keys.

O. Contractor will replace temporary construction cores with permanent cores.

2.15 KEYING

A. Keying System: Factory registered, complying with guidelines in ANSI/BHMA A156.28, incorporating decisions made at keying conference.

B. Keying System: Existing Schlage system maintained by Owner or Owners representative, incorporating decisions made at keying conference.

C. Keying Requirements – General

1. Permanent cylinders/cores keyed by the manufacturer according to the following key system.

D. Keying system tied into existing Schlage Primus system as directed by the Owner.

1. Forward bitting list and keys separately from cylinders, by means as directed by Owner. Failure to comply with forwarding requirements shall be cause for replacement of cylinders/cores involved at no additional cost to Owner.

E. Key Features: Provide keys with the following features.

1. Patent Protection: Keys and blanks protected by one or more utility patent(s).

F. Keys

1. Material: Nickel silver; minimum thickness of .092-inch (2.3mm)
2. Identification:

G. Coordinate with cylinder/core and key identification requirements above.

H. Stamp keys with Owner's unique key system facility code as established by the manufacturer; key symbol and embossed or stamped with "DO NOT DUPLICATE" along with the "PATENTED" or patent number to enforce the patent protection.

I. Failure to comply with stamping requirements shall be cause for replacement of keys involved at no additional cost to Owner.

1. Quantity: Furnish in the following quantities.

J. Change (Day) Keys: 3 per cylinder/core.

K. Permanent Control Keys: 5.

L. Master Keys: 6.

M. Unused balance of key blanks shall be furnished to Owner with the cut keys.

2.16 KEY CONTROL SYSTEM

A. Key Control System Manufacturers:

1. Scheduled Manufacturer: Telkee
2. Acceptable Manufacturers: HPC, Lund

B. Requirements:

1. Provide key control system, including envelopes, labels, tags with self-locking key clips, receipt forms, 3-way visible card index, temporary markers, permanent markers, and standard metal cabinet, all as recommended by system manufacturer, with capacity for 150% of number of locks required for Project.

    a. Provide complete cross index system set up by hardware supplier, and place keys on markers and hooks in cabinet as determined by final key schedule.
    b. Provide hinged-panel type cabinet for wall mounting.

C. Key Management Software Manufacturers and Products:

1. Scheduled Manufacturer and Product: Schlage SITEMASTER 200
2. Acceptable Manufacturers and Products: Best Keystone 600N, Corbin-Russwin KeyWizard, Medeco KeyWizard, Sargent KeyWizard, Yale KeyWizard.

D. Key Management Software Requirements:

1. Software: Provide tracking, issuing, collecting and transferring information regarding keys. Provide customized query, reporting, searching capability, comprehensive location hardware listings, display key holder photos and signature for verification, and provide automatic reminders for maintenance, back-ups and overdue keys.
2. Provide training for Owner’s personnel on proper operation and application of key management software.

2.17 DOOR CLOSERS

A. Manufacturers and Products:

1. Scheduled Manufacturer and Product: LCN 4040XP series
2. Acceptable Manufacturers and Products: No Substitute.

B. Requirements:

1. Provide door closers certified to ANSI/BHMA A156.4 Grade 1 requirements by BHMA certified independent testing laboratory. ISO 9000 certify closers. Stamp units with date of manufacture code.
2. Provide door closers with fully hydraulic, full rack and pinion action with high strength cast iron cylinder, and full complement bearings at shaft.
3. Cylinder Body: 1-1/2 inch (38 mm) diameter, with 11/16 inch (17 mm) diameter double heat-treated pinion journal.
4. Hydraulic Fluid: Fireproof, passing requirements of UL10C, and requiring no seasonal closer adjustment for temperatures ranging from 120 degrees F to -30 degrees F.
5. Spring Power: Continuously adjustable over full range of closer sizes, and providing reduced opening force as required by accessibility codes and standards.
6. Hydraulic Regulation: By tamper-proof, non-critical valves with separate adjustment for latch speed, general speed, and backcheck.

7. Provide closers with a solid forged steel main arms and factory assembled heavy-duty forged forearms for parallel arm closers.
8. Pressure Relief Valve (PRV) Technology: Not permitted.
9. Finish for Closer Cylinders, Arms, Adapter Plates, and Metal Covers: Powder coating finish which has been certified to exceed 100 hours salt spray testing as described in ANSI Standard A156.4 and ASTM B117, or has special rust inhibitor (SRI).
10. Provide special templates, drop plates, mounting brackets, or adapters for arms as required for details, overhead stops, and other door hardware items interfering with closer mounting.

2.18 DOOR TRIM

A. Manufacturers:

1. Scheduled Manufacturer: Ives.
2. Acceptable Manufacturers: Burns, Rockwood.

B. Requirements:

1. Provide push plates 4 inches (102 mm) wide by 16 inches (406 mm) high by 0.050 inch (1 mm) thick and beveled 4 edges. Where width of door stile prevents use of 4 inches (102 mm) wide plate, adjust width to fit.
2. Provide push bars of solid bar stock, diameter and length as scheduled. Provide push bars of sufficient length to span from center to center of each stile. Where required, mount back to back with pull.
3. Provide offset pulls of solid bar stock, diameter and length as scheduled. Where required, mount back to back with push bar.
4. Provide flush pulls as specified. Where required, provide back-to-back mounted model.
5. Provide pulls of solid bar stock, diameter and length as scheduled. Where required, mount back to back with push bar.
6. Provide pull plates 4 inches (102 mm) wide by 16 inches (406 mm) high by 0.050 inch (1 mm) thick, beveled 4 edges, and prepped for pull. Where width of door stile prevents use of 4 inches (102 mm) wide plate, adjust width to fit.
7. Provide wire pulls of solid bar stock, diameter and length as scheduled.

2.19 PROTECTION PLATES

A. Manufacturers:

1. Scheduled Manufacturer: Ives.
2. Acceptable Manufacturers: Burns, Rockwood.

B. Requirements:

1. Provide kick plates, mop plates, and armor plates minimum of 0.050 inch (1 mm) thick as scheduled. Furnish with sheet metal or wood screws, finished to match plates.
2. Sizes of plates:

   a. Kick Plates: 10 inches (254 mm) high by 2 inches (51 mm) less width of door on single doors, 1 inch (25 mm) less width of door on pairs
   b. Mop Plates: 4 inches (102 mm) high by 2 inches (51 mm) less width of door on single doors, 1 inch (25 mm) less width of door on pairs
   c. Armor Plates: 36 inches (914 mm) high by 2 inches (51 mm) less width of door on single doors, 1 inch (25 mm) less width of door on pairs

2.20 OVERHEAD STOPS AND OVERHEAD STOP/HOLDERS

A. Manufacturers:

1. Scheduled Manufacturers: Glynn-Johnson
2. Acceptable Manufacturers: Rixson,

B. Requirements:

1. Provide heavy duty concealed mounted overhead stop or holder as specified for exterior and interior vestibule single acting doors.
2. Provide heavy duty concealed mounted overhead stop or holder as specified for double acting doors.
3. Provide heavy or medium duty and concealed or surface mounted overhead stop or holder for interior doors as specified. Provide medium duty surface mounted overhead stop for interior doors and at any door that swings more than 140 degrees before striking wall, open against equipment, casework, sidelights, and where conditions do not allow wall stop or floor stop presents tripping hazard.
4. Where overhead holders are specified provide friction type at doors without closer and positive type at doors with closer.

2.21 DOOR STOPS AND HOLDERS

A. Manufacturers:

1. Scheduled Manufacturer: Ives.
2. Acceptable Manufacturers: Burns, Rockwood.

B. Provide door stops at each door leaf:

1. Provide wall stops wherever possible. Provide convex type where mortise type locks are used and concave type where cylindrical type locks are used.
2. Where a wall stop cannot be used, provide universal floor stops for low or high rise options.
3. Where wall or floor stop cannot be used, provide medium duty surface mounted overhead stop.

2.22 THRESHOLDS, SEALS, DOOR SWEEPS, AUTOMATIC DOOR BOTTOMS, AND GASKETING

A. Manufacturers:

1. Scheduled Manufacturer: National Guard.
2. Acceptable Manufacturers: Pemko, Zero.

B. Requirements:

1. Provide thresholds, weatherstripping (including door sweeps, seals, astragals) and gasketing systems (including smoke, sound, and light) as specified and per architectural details. Match finish of other items.
2. Size of thresholds::

   a. Saddle Thresholds: 1/2 inch (13 mm) high by jamb width by door width
   b. Bumper Seal Thresholds: 1/2 inch (13 mm) high by 5 inches (127 mm) wide by door width

3. Provide door sweeps, seals, astragals, and auto door bottoms only of type where resilient or flexible seal strip is easily replaceable and readily available.

2.23 SILENCERS

A. Manufacturers:

1. Scheduled Manufacturer: Ives.
2. Acceptable Manufacturers: Burns, Rockwood.

B. Requirements:

1. Provide "push-in" type silencers for hollow metal or wood frames.
2. Provide one silencer per 30 inches (762 mm) of height on each single frame, and two for each pair frame.
3. Omit where gasketing is specified.

2.24 MAGNETIC HOLDERS

A. Manufacturers:

1. Scheduled Manufacturer: LCN.
2. Acceptable Manufacturers: Rixson, Sargent.

B. Requirements:

1. Provide wall or floor mounted electromagnetic door release as specified with minimum of 25 pounds of holding force. Coordination projection of holder and armature with other hardware and wall conditions to ensure that door sits parallel to wall when fully open. Wire magnetic holders on fire-rated doors into the fire control panel for fail-safe operation.

2.25 DOOR POSITION SWITCHES

A. Manufacturers:

1. Scheduled Manufacturer: Schlage Electronics.
2. Acceptable Manufacturers: GE-Interlogix, Sargent.

B. Requirements:

1. Provide recessed or surface mounted type door position switches as specified.
2. Coordinate door and frame preparations with door and frame suppliers. If switches are being used with magnetic locking device, provide minimum of 4 inches (102 mm) between switch and magnetic locking device.

2.26 FINSHES

A. Finish: BHMA 626/652 (US26D); except:

1. Hinges at Exterior Doors: BHMA 630 (US32D)
2. Continuous Hinges: BHMA 630 (US32D)
3. Push Plates, Pulls, and Push Bars: BHMA 630 (US32D)
4. Protection Plates: BHMA 630 (US32D)
5. Overhead Stops and Holders: BHMA 630 (US32D)
6. Door Closers: Powder Coat to Match
7. Wall Stops: BHMA 630 (US32D)

8. Latch Protectors: BHMA 630 (US32D)
9. Weatherstripping: Clear Anodized Aluminum
10. Thresholds: Mill Finish Aluminum

PART 3 - EXECUTION

3.1 EXAMINATION

A. Prior to installation of hardware, examine doors and frames, with Installer present, for compliance with requirements for installation tolerances, labeled fire-rated door assembly construction, wall and floor construction, and other conditions affecting performance.

B. Existing Door and Frame Compatibility: Field verify existing doors and frames receiving new hardware and existing conditions receiving new openings. Verify that new hardware is compatible with existing door and frame preparation and existing conditions.

C. Examine roughing-in for electrical power systems to verify actual locations of wiring connections before electrified door hardware installation.

D. Proceed with installation only after unsatisfactory conditions have been corrected.

3.2 PREPARATION

A. Where on-site modification of doors and frames is required:

1. Remove existing hardware being replaced, tag, and store according to contract documents.
2. Field modify and prepare existing door and frame for new hardware being installed.
3. When modifications are exposed to view, use concealed fasteners, when possible.
4. Prepare hardware locations in accordance with:

   a. Steel Doors and Frames: For surface applied door hardware, drill and tap doors and frames according to ANSI/SDI A250.6.
   b. Wood Doors: DHI WDHS.5 "Recommended Hardware Reinforcement Locations for Mineral Core Wood Flush Doors."
   c. Doors in rated assemblies: NFPA 80 for restrictions on on-site door hardware preparation.

3.3 INSTALLATION

A. Mounting Heights: Mount door hardware units at heights to comply with the following, unless otherwise indicated or required to comply with governing regulations.

1. Standard Steel Doors and Frames: ANSI/SDI A250.8.
2. Custom Steel Doors and Frames: HMMA 831.
3. Wood Doors: DHI WDHS.3, "Recommended Locations for Architectural Hardware for Wood Flush Doors."

B. Install each hardware item in compliance with manufacturer’s instructions and recommendations, using only fasteners provided by manufacturer.

C. Do not install surface mounted items until finishes have been completed on substrate. Protect all installed hardware during painting.

D. Set units level, plumb and true to line and location. Adjust and reinforce attachment substrate as necessary for proper installation and operation.

E. Drill and countersink units that are not factory prepared for anchorage fasteners. Space fasteners and anchors according to industry standards.

F. Install operating parts so they move freely and smoothly without binding, sticking, or excessive clearance.

G. Hinges: Install types and in quantities indicated in door hardware schedule but not fewer than quantity recommended by manufacturer for application indicated or one hinge for every 30 inches (750 mm) of door height, whichever is more stringent, unless other equivalent means of support for door, such as spring hinges or pivots, are provided.

H. Intermediate Offset Pivots: Where offset pivots are indicated, provide intermediate offset pivots in quantities indicated in door hardware schedule but not fewer than one intermediate offset pivot per door and one additional intermediate offset pivot for every 30 inches (750 mm) of door height greater than 90 inches (2286 mm).

I. Lock Cylinders: Install construction cores to secure building and areas during construction period.

1. Replace construction cores with permanent cores as indicated in keying section.

J. Wiring: Coordinate with Division 26, ELECTRICAL sections for:

1. Conduit, junction boxes and wire pulls.
2. Connections to and from power supplies to electrified hardware.
3. Connections to fire/smoke alarm system and smoke evacuation system.
4. Connection of wire to door position switches and wire runs to central room or area, as directed by Architect.
5. Testing and labeling wires with Architect’s opening number.

K. Key Control System: Tag keys and place them on markers and hooks in key control system cabinet, as determined by final keying schedule.

L. Door Closers: Mount closers on room side of corridor doors, inside of exterior doors, and stair side of stairway doors from corridors. Closers shall not be visible in corridors, lobbies and other public spaces unless approved by Architect.

M. Closer/Holders: Mount closer/holders on room side of corridor doors, inside of exterior doors, and stair side of stairway doors.

N. Power Supplies: Locate power supplies as indicated or, if not indicated, above accessible ceilings or in equipment room, or alternate location as directed by Architect.

1. Configuration: Provide least number of power supplies required to adequately serve doors with electrified door hardware.

O. Thresholds: Set thresholds in full bed of sealant complying with requirements specified in Division 07 Section "Joint Sealants."

P. Stops: Provide floor stops for doors unless wall or other type stops are indicated in door hardware schedule. Do not mount floor stops where they may impede traffic or present tripping hazard.

Q. Perimeter Gasketing: Apply to head and jamb, forming seal between door and frame.

R. Meeting Stile Gasketing: Fasten to meeting stiles, forming seal when doors are closed.

S. Door Bottoms: Apply to bottom of door, forming seal with threshold when door is closed.

3.4 FIELD QUALITY CONTROL

A. Architectural Hardware Consultant: Engage qualified independent Architectural Hardware Consultant to perform inspections and to prepare inspection reports.

1. Architectural Hardware Consultant will inspect door hardware and state in each report whether installed work complies with or deviates from requirements, including whether door hardware is properly installed and adjusted.

3.5 ADJUSTING

A. Initial Adjustment: Adjust and check each operating item of door hardware and each door to ensure proper operation or function of every unit. Replace units that cannot be adjusted to operate as intended. Adjust door control devices to compensate for final operation of heating and ventilating equipment and to comply with referenced accessibility requirements.

1. Spring Hinges: Adjust to achieve positive latching when door is allowed to close freely from an open position of 30 degrees.
2. Electric Strikes: Adjust horizontal and vertical alignment of keeper to properly engage lock bolt.
3. Door Closers: Adjust sweep period to comply with accessibility requirements and requirements of authorities having jurisdiction.

B. Occupancy Adjustment: Approximately six months after date of Substantial Completion, Installer's Architectural Hardware Consultant shall examine and readjust each item of door hardware, including adjusting operating forces, as necessary to ensure function of doors, door hardware, and electrified door hardware.

3.6 CLEANING AND PROTECTION

A. Clean adjacent surfaces soiled by door hardware installation.

B. Clean operating items as necessary to restore proper function and finish.

C. Provide final protection and maintain conditions that ensure door hardware is without damage or deterioration at time of Substantial Completion.

3.7 DEMONSTRATION

A. Provide training for Owner's maintenance personnel to adjust, operate, and maintain door hardware and door hardware finishes. Refer to Division 01 Section "Demonstration and Training."

3.8 DOOR HARDWARE SCHEDULE

A. Locksets, exit devices, and other hardware items are referenced in the following hardware sets for series, type and function. Refer to the above-specifications for special features, options, cylinders/keying, and other requirements.

B. Hardware Sets:

Hardware Set No. 100
For use on door #(s):
A100A/1 A100B/1

Provide each PR door(s) with the following:

Qty		Description	Catalog Number	Finish	Mfr
2	EA	CONT. HINGE	224HD EPT	628	IVE
2	EA	POWER TRANSFER	EPT10	689	VON
1	EA	KEYED REMOVABLE MULLION	KR4954-STAB	689	VON
1	EA	ELEC PANIC HARDWARE	RX-QEL+-98-NL-OP-110	626	VON
1	EA	ELEC PANIC HARDWARE	RX-QEL+-SD-98-EO	626	VON
1	EA	RIM CYLINDER	20-057-ICX	626	SCH
3	EA	MORTISE CYLINDER	20-061-ICX	626	SCH
4	EA	PRIMUS CORE	20-740	626	SCH
2	EA	90 DEG OFFSET PULL	8190 18" O	630	IVE
2	EA	OH STOP & HOLDER	100H	630	GLY
2	EA	SURFACE CLOSER	4040XP EDA TBSRT	689	LCN
2	EA	CUSH SHOE SUPPORT	4040-30	689	LCN
2	EA	BLADE STOP SPACER	4040-61	689	LCN
1	EA	MULLION SEAL	5100	BLK	NGP
1	EA	THRESHOLD	896S	AL	NGP
2	EA	DOOR CONTACT	679-05HM	BLK	SCE
1	EA	POWER SUPPLY	PS902 900-2RS KL900	LGR	VON

DOOR OPERATION: Door normally closed and secure. Entry from secure side by valid credential or key override which will unlock electrified door. Free egress from inside at all times. Door position switch and request to exit connected to access control system for monitoring.

Hardware Set No. 101
For use on door #(s):
A100A/2 A100B/2

Provide each PR door(s) with the following:

Qty		Description	Catalog Number	Finish	Mfr
2	EA	CONT. HINGE	224HD EPT	628	IVE
1	EA	KEYED REMOVABLE MULLION	KR4954-STAB	689	VON
2	EA	ELEC PANIC HARDWARE	RX-QEL+-SD-98-EO	626	VON
3	EA	MORTISE CYLINDER	20-061-ICX	626	SCH
3	EA	PRIMUS CORE	20-740	626	SCH
2	EA	90 DEG OFFSET PULL	8190 18" O	630	IVE
2	EA	OH STOP & HOLDER	100H	630	GLY
2	EA	SURFACE CLOSER	4040XP EDA TBSRT	689	LCN
2	EA	CUSH SHOE SUPPORT	4040-30	689	LCN
2	EA	BLADE STOP SPACER	4040-61	689	LCN
1	EA	MULLION SEAL	5100	BLK	NGP
1	EA	THRESHOLD	896S	AL	NGP
2	EA	DOOR CONTACT	679-05HM	BLK	SCE
1	EA	POWER SUPPLY	PS902 900-2RS KL900	LGR	VON

DOOR OPERATION: Door normally closed and secure. Entry from secure side by valid credential or key override which will unlock electrified door. Free egress from inside at all times. Door position switch and request to exit connected to access control system for monitoring.

Hardware Set No. 102

For use on door #(s):
A100A/3

Provide each PR door(s) with the following:

Qty		Description	Catalog Number	Finish	Mfr
2	EA	CONT. HINGE	224HD EPT	628	IVE
2	EA	POWER TRANSFER	EPT10	689	VON
1	EA	KEYED REMOVABLE MULLION	KR4954-STAB	689	VON
1	EA	ELEC PANIC HARDWARE	RX-QEL+-98-NL-OP-110	626	VON
1	EA	ELEC PANIC HARDWARE	RX-QEL+-SD-98-EO	626	VON
1	EA	RIM CYLINDER	20-057-ICX	626	SCH
3	EA	MORTISE CYLINDER	20-061-ICX	626	SCH
1	EA	PRIMUS CORE	20-740	626	SCH
2	EA	90 DEG OFFSET PULL	8190 18" O	630	IVE
2	EA	OH STOP & HOLDER	100H	630	GLY
2	EA	SURFACE CLOSER	4040XP EDA TBSRT	689	LCN
2	EA	CUSH SHOE SUPPORT	4040-30	689	LCN
2	EA	BLADE STOP SPACER	4040-61	689	LCN
2	EA	DOOR CONTACT	679-05HM	BLK	SCE
1	EA	POWER SUPPLY	PS902 900-2RS KL900	LGR	VON

DOOR OPERATION: Door normally closed and secure. Entry from secure side by valid credential or key override which will unlock electrified door. Free egress from inside at all times. Door position switch and request to exit connected to access control system for monitoring.

Hardware Set No. 103
For use on door #(s):
A100A/4

Provide each PR door(s) with the following:

Qty		Description	Catalog Number	Finish	Mfr
2	EA	CONT. HINGE	224HD EPT	628	IVE
1	EA	KEYED REMOVABLE MULLION	KR4954-STAB	689	VON
2	EA	ELEC PANIC HARDWARE	RX-QEL+-SD-98-EO	626	VON
3	EA	MORTISE CYLINDER	20-061-ICX	626	SCH
3	EA	PRIMUS CORE	20-740	626	SCH
2	EA	90 DEG OFFSET PULL	8190 18" O	630	IVE
2	EA	OH STOP & HOLDER	100H	630	GLY
2	EA	SURFACE CLOSER	4040XP EDA TBSRT	689	LCN
2	EA	CUSH SHOE SUPPORT	4040-30	689	LCN
2	EA	BLADE STOP SPACER	4040-61	689	LCN
2	EA	DOOR CONTACT	679-05HM	BLK	SCE
1	EA	POWER SUPPLY	PS902 900-2RS KL900	LGR	VON

DOOR OPERATION: Door normally closed and secure. Entry from secure side by valid credential or key override which will unlock electrified door. Free egress from inside at all times. Door position switch and request to exit connected to access control system for monitoring.

Hardware Set No. 104
For use on door #(s):
A101/2

Provide each SGL door(s) with the following:

Qty		Description	Catalog Number	Finish	Mfr
1	EA	CONT. HINGE	224HD	628	IVE
1	EA	POWER TRANSFER	EPT10	689	VON
1	EA	CLASSROOM SECURITY	L9071T 17A XL11-986	626	SCH
2	EA	PRIMUS CORE	20-740	626	SCH
1	EA	SURFACE CLOSER	4040XP CUSH TBSRT	689	LCN
1	EA	CUSH SHOE SUPPORT	4040-30	689	LCN
1	EA	BLADE STOP SPACER	4040-61	689	LCN

Hardware Set No. 105

For use on door #(s):
A100B/3 A100B/4 B100A/2 C100F/3 C100F/4 C100H/2

Provide each PR door(s) with the following:

Qty		Description	Catalog Number	Finish	Mfr
2	EA	CONT. HINGE	224HD	628	IVE
1	EA	DUMMY PUSH BAR	350-EO	626	VON
2	EA	90 DEG OFFSET PULL	8190 18" O	630	IVE
2	EA	OH STOP	100S	630	GLY
2	EA	SURFACE CLOSER	4040XP EDA TBSRT	689	LCN

Hardware Set No. 106

For use on door #(s):
A100E/1 A115/2 C100A/1 D114/2

Provide each PR door(s) with the following:

Qty		Description	Catalog Number	Finish	Mfr
2	EA	CONT. HINGE	224HD	628	IVE
1	EA	KEYED REMOVABLE MULLION	KR4954-STAB	689	VON
2	EA	PANIC HARDWARE	CD-98-EO	626	VON
3	EA	MORTISE CYLINDER	20-061-ICX	626	SCH
3	EA	PRIMUS CORE	20-740	626	SCH
2	EA	OH STOP	100S	630	GLY
2	EA	SURFACE CLOSER	4040XP EDA TBSRT	689	LCN
2	EA	CUSH SHOE SUPPORT	4040-30	689	LCN
2	EA	BLADE STOP SPACER	4040-61	689	LCN
1	EA	MULLION SEAL	5100	BLK	NGP
1	EA	THRESHOLD	896S	AL	NGP
2	EA	DOOR CONTACT	679-05HM	BLK	SCE

DOOR OPERATION: Door position switch to be connected to access control system for monitoring.

Hardware Set No. 107

For use on door #(s):
C101/1

Provide each SGL door(s) with the following:

Qty		Description	Catalog Number	Finish	Mfr
1	EA	CONT. HINGE	224HD	628	IVE
1	EA	STOREROOM LOCK	LV9080T 17A	626	SCH
1	EA	PRIMUS CORE	20-740	626	SCH
1	EA	SURFACE CLOSER	4040XP SCUSH TBSRT	689	LCN
1	EA	KICK PLATE	8400 10" X 2" LDW B4E	630	IVE
1	EA	DRIP CAP	17	AL	NGP
1	SET	SEALS	5050B	BRN	NGP
1	EA	THRESHOLD	896S	AL	NGP
1	EA	DOOR CONTACT	679-05HM	BLK	SCE

DOOR OPERATION: Door position switch to be connected to access control system for monitoring.

Hardware Set No. 108

For use on door #(s):
B100A/1 C100F/2 C100H/1

Provide each PR door(s) with the following:

Qty		Description	Catalog Number	Finish	Mfr
2	EA	CONT. HINGE	224HD EPT	628	IVE
2	EA	POWER TRANSFER	EPT10	689	VON
1	EA	KEYED REMOVABLE MULLION	KR4954-STAB	689	VON
1	EA	ELEC PANIC HARDWARE	RX-CD-98-EO	626	VON
1	EA	ELEC PANIC HARDWARE	RX-QEL+-SD-98-NL-OP-110	626	VON
1	EA	RIM CYLINDER	20-057-ICX	626	SCH
3	EA	MORTISE CYLINDER	20-061-ICX	626	SCH
4	EA	PRIMUS CORE	20-740	626	SCH
2	EA	90 DEG OFFSET PULL	8190 18" O	630	IVE
2	EA	OH STOP	100S	630	GLY
2	EA	SURFACE CLOSER	4040XP EDA TBSRT	689	LCN
2	EA	CUSH SHOE SUPPORT	4040-30	689	LCN
2	EA	BLADE STOP SPACER	4040-61	689	LCN
1	EA	MULLION SEAL	5100	BLK	NGP
1	EA	THRESHOLD	896S	AL	NGP
2	EA	DOOR CONTACT	679-05HM	BLK	SCE
1	EA	POWER SUPPLY	PS902 900-2RS KL900	LGR	VON

DOOR OPERATION: Door normally closed and secure. Entry from secure side by valid credential or key override which will unlock electrified door. Free egress from inside at all times. Door position switch and request to exit connected to access control system for monitoring.

Hardware Set No. 109

For use on door #(s):
C110/1

Provide each PR door(s) with the following:

Qty		Description	Catalog Number	Finish	Mfr
2	EA	CONT. HINGE	224HD	628	IVE
1	EA	KEYED REMOVABLE MULLION	KR4954-STAB	689	VON
2	EA	PANIC HARDWARE	98-EO	626	VON
1	EA	RIM CYLINDER	20-057-ICX	626	SCH
1	EA	MORTISE CYLINDER	20-061-ICX	626	SCH
2	EA	PRIMUS CORE	20-740	626	SCH
1	EA	DOOR PULL	VR910 NL	630	IVE
2	EA	SURFACE CLOSER	4040XP SCUSH TBSRT	689	LCN
2	EA	KICK PLATE	8400 10" X 2" LDW B4E	630	IVE
1	SET	SEALS	5050B	BRN	NGP
1	SET	ASTRAGAL	140PA	CL	NGP
1	EA	MULLION SEAL	5100	BLK	NGP
2	EA	DOOR SWEEP	C627A	CL	NGP
1	EA	THRESHOLD	896S	AL	NGP
2	EA	DOOR CONTACT	679-05HM	BLK	SCE

DOOR OPERATION: Door position switch to be connected to access control system for monitoring.

Hardware Set No. 110

For use on door #(s):
C107/2 C120/1

Provide each PR door(s) with the following:

Qty		Description	Catalog Number	Finish	Mfr
2	EA	CONT. HINGE	224HD	628	IVE
2	EA	MANUAL FLUSH BOLT	FB458	626	IVE
1	EA	STOREROOM LOCK	LV9080T 17A	626	SCH
1	EA	PRIMUS CORE	20-740	626	SCH
2	EA	OH STOP & HOLDER	90H	630	GLY
2	EA	SURFACE CLOSER	4040XP EDA TBSRT x ST2731	689	LCN
2	EA	KICK PLATE	8400 10" X 1" LDW B4E	630	IVE
1	SET	SEALS	5050B	BRN	NGP
1	SET	ASTRAGAL	140PA	CL	NGP
2	EA	DOOR SWEEP	C627A	CL	NGP
1	EA	THRESHOLD	896S	AL	NGP
2	EA	DOOR CONTACT	679-05HM	BLK	SCE

DOOR OPERATION: Door position switch to be connected to access control system for monitoring.

Hardware Set No. 111

For use on door #(s):
C128/1

Provide each SGL door(s) with the following:

Qty		Description	Catalog Number	Finish	Mfr
1	EA	CONT. HINGE	112HD EPT	628	IVE
1	EA	POWER TRANSFER	EPT10	689	VON
1	EA	ELEC PANIC HARDWARE	RX-QEL+-98-EO	626	VON
1	EA	RIM CYLINDER	20-057-ICX	626	SCH
1	EA	PRIMUS CORE	20-740	626	SCH
1	EA	DOOR PULL	VR910 NL	630	IVE
1	EA	OH STOP & HOLDER	90H	630	GLY
1	EA	SURFACE CLOSER	4040XP EDA TBSRT x ST2731 Template	689	LCN
1	EA	KICK PLATE	8400 10" X 2" LDW B4E	630	IVE
1	EA	DRIP CAP	17	AL	NGP
1	SET	SEALS	5050B	BRN	NGP
1	EA	THRESHOLD	896S	AL	NGP
1	EA	DOOR CONTACT	679-05HM	BLK	SCE
1	EA	POWER SUPPLY	PS902 900-2RS KL900	LGR	VON
1			CARD READER BY OTHERS		

DOOR OPERATION: Door normally closed and secure. Entry from secure side by valid credential or key override which will unlock electrified door. Free egress from inside at all times. Door position switch and request to exit connected to access control system for monitoring.

Hardware Set No. 112

For use on door #(s):
C114/3 C116/1

Provide each PR door(s) with the following:

Qty		Description	Catalog Number	Finish	Mfr
2	EA	CONT. HINGE	224HD	628	IVE
1	EA	KEYED REMOVABLE MULLION	KR4954-STAB	689	VON
2	EA	PANIC HARDWARE	CD-98-EO	626	VON
1	EA	RIM CYLINDER	20-057-ICX	626	SCH
3	EA	MORTISE CYLINDER	20-061-ICX	626	SCH
4	EA	PRIMUS CORE	20-740	626	SCH
1	EA	DOOR PULL	VR910 DT	630	IVE
1	EA	DOOR PULL	VR910 NL	630	IVE
2	EA	OH STOP & HOLDER	90H	630	GLY
2	EA	SURFACE CLOSER	4040XP EDA TBSRT x ST2731	689	LCN
2	EA	KICK PLATE	8400 10" X 2" LDW B4E	630	IVE
1	EA	DRIP CAP	17	AL	NGP
1	SET	SEALS	5050B	BRN	NGP
1	EA	MULLION SEAL	5100	BLK	NGP
2	EA	DOOR SWEEP	C627A	CL	NGP
1	EA	THRESHOLD	896S	AL	NGP
2	EA	DOOR CONTACT	679-05HM	BLK	SCE

DOOR OPERATION: Door position switch to be connected to access control system for monitoring.

Hardware Set No. 113

For use on door #(s):
C124/1

Provide each SGL door(s) with the following:

Qty		Description	Catalog Number	Finish	Mfr
1	EA	CONT. HINGE	224HD	628	IVE
1	EA	PRIVACY W/DB & IND	LV9496T 17A L583-363	626	SCH
1	EA	PRIMUS CORE	20-740	626	SCH
1	EA	OH STOP	90S	630	GLY
1	EA	SURFACE CLOSER	4040XP EDA TBSRT	689	LCN
1	EA	KICK PLATE	8400 10" X 2" LDW B4E	630	IVE
1	EA	DRIP CAP	17	AL	NGP
1	SET	SEALS	5050B	BRN	NGP
1	EA	DOOR SWEEP	C627A	CL	NGP
1	EA	THRESHOLD	896S	AL	NGP

Hardware Set No. 114

For use on door #(s):
C100F/1

Provide each PR door(s) with the following:

Qty		Description	Catalog Number	Finish	Mfr
2	EA	CONT. HINGE	224HD	628	IVE
1	EA	KEYED REMOVABLE MULLION	KR4954-STAB	689	VON
2	EA	PANIC HARDWARE	CD-98-EO	626	VON
3	EA	MORTISE CYLINDER	20-061-ICX	626	SCH
4	EA	PRIMUS CORE	20-740	626	SCH
2	EA	90 DEG OFFSET PULL	8190 18" O	630	IVE
2	EA	OH STOP	100S	630	GLY
2	EA	SURFACE CLOSER	4040XP EDA TBSRT	689	LCN
1	EA	MULLION SEAL	5100	BLK	NGP
1	EA	THRESHOLD	896S	AL	NGP
2	EA	DOOR CONTACT	679-05HM	BLK	SCE

DOOR OPERATION: Door position switch to be connected to access control system for monitoring.

Hardware Set No. 115

For use on door #(s):
C122/2 C202/2

Provide each SGL door(s) with the following:

Qty		Description	Catalog Number	Finish	Mfr
3	EA	HINGE	5BB1 4.5 X 4.5 NRP	630	IVE
1	EA	DBL CYL STORE W/DB	L9466T 17A	626	SCH
2	EA	PRIMUS CORE	20-740	626	SCH
1	EA	SURFACE CLOSER	4040XP SHCUSH TBSRT	689	LCN
1	EA	KICK PLATE	8400 10" X 2" LDW B4E	630	IVE
1	EA	DRIP CAP	17	AL	NGP

1	EA	DOOR SWEEP	C627A	CL	NGP
1	EA	THRESHOLD	896S	AL	NGP

Hardware Set No. 200

For use on door #(s):
C100A/2 C200/1 D114/1 D114/3

Provide each PR door(s) with the following:

Qty		Description	Catalog Number	Finish	Mfr
2	EA	CONT. HINGE	705	630	IVE
2	EA	FIRE EXIT HARDWARE	9849-L-BE-F-996-17-LBL	626	VON
2	EA	SURFACE CLOSER	4040XP EDA TBSRT	689	LCN
2	EA	KICK PLATE	8400 10" X 1" LDW B4E	630	IVE
2	EA	FIRE/LIFE WALL MAG	SEM1980	689	LCN
1	SET	SEALS	5020B	BRN	NGP
1	SET	SEALS	5060B	BRN	NGP

Door held open by wall magnets connected to fire alarm system.

Hardware Set No. 201

For use on door #(s):
C100A/3

Provide each PR door(s) with the following:

Qty		Description	Catalog Number	Finish	Mfr
2	EA	CONT. HINGE	705	630	IVE
2	EA	FIRE EXIT HARDWARE	9849-L-F-996-17-LBL	626	VON
2	EA	RIM CYLINDER	20-057-ICX	626	SCH
2	EA	FSIC CORE	23-030	626	SCH
2	EA	SURFACE CLOSER	4040XP EDA TBSRT	689	LCN
2	EA	KICK PLATE	8400 10" X 1" LDW B4E	630	IVE
2	EA	FIRE/LIFE WALL MAG	SEM1980	689	LCN
1	SET	SEALS	5020B	BRN	NGP
1	SET	SEALS	5060B	BRN	NGP

Door held open by wall magnets connected to fire alarm system.

Hardware Set No. 202

For use on door #(s):
C100C/3

Provide each PR door(s) with the following:

Qty		Description	Catalog Number	Finish	Mfr
2	EA	CONT. HINGE	705	630	IVE
1	EA	FIRE EXIT HARDWARE	9849-EO-F-LBL	626	VON
1	EA	FIRE EXIT HARDWARE	9849-L-F-996-17-LBL	626	VON
1	EA	RIM CYLINDER	20-057-ICX	626	SCH
1	EA	FSIC CORE	23-030	626	SCH
2	EA	SURFACE CLOSER	4040XP EDA TBSRT	689	LCN
2	EA	KICK PLATE	8400 10" X 1" LDW B4E	630	IVE
2	EA	FIRE/LIFE WALL MAG	SEM1980	689	LCN
1	SET	SEALS	5020B	BRN	NGP

1	SET	SEALS	5060B	BRN	NGP
2	EA	SILENCER	SR64	GRY	IVE

Door held open by wall magnets connected to fire alarm system.

Hardware Set No. 300

For use on door #(s):

B101/1	B102/1	B103/1	B104/1	B105A/1	B105D/1
B105E/1	B106/1	B107/1	B108/1	B109/1	B110/1
B112/1	C125/1	D101/1	D102/1	D103/1	D104/1
D105/1	D107/1	D107A/2	D109/1	D110/1	D111/1
D112/1	D113/1	D200D/1	D201/1	D202/1	D203/1
D204/1	D205/1	D207E/1	D209/1	D210/1	D211/1
D212/1	D213/1				

Provide each SGL door(s) with the following:

Qty		Description	Catalog Number	Finish	Mfr
3	EA	HW HINGE	5BB1HW 4.5 X 4.5 NRP	652	IVE
1	EA	CLASSROOM SECURITY	L9071T 17A XL11-986	626	SCH
2	EA	FSIC CORE	23-030	626	SCH
1	EA	SURFACE CLOSER	4040XP EDA TBSRT	689	LCN
1	EA	KICK PLATE	8400 10" X 2" LDW B4E	630	IVE
1	EA	MOP PLATE	8400 4" X 1" LDW B4E	630	IVE
1	EA	WALL STOP	WS406CCV	630	IVE
3	EA	SILENCER	SR64	GRY	IVE

Hardware Set No. 301

For use on door #(s):
A101/1

Provide each SGL door(s) with the following:

Qty		Description	Catalog Number	Finish	Mfr
3	EA	HW HINGE	5BB1HW 4.5 X 4.5 NRP	652	IVE
1	EA	CLASSROOM X STORERM	ND70X80TD SPA	626	SCH
2	EA	FSIC CORE	23-030	626	SCH
1	EA	SURFACE CLOSER	4040XP EDA TBSRT	689	LCN
1	EA	KICK PLATE	8400 10" X 2" LDW B4E	630	IVE
1	EA	MOP PLATE	8400 4" X 1" LDW B4E	630	IVE
1	EA	WALL STOP	WS406CCV	630	IVE
3	EA	SILENCER	SR64	GRY	IVE

DOOR OPERATION: Door normally closed and secure from the waiting room. Entry from waiting room into corridor by valid credential or key override which will unlock electrified door. Free egress from inside at all times. Door position switch and request to exit connected to access control system for monitoring. Corridor side of lock is equipped with a classroom function and can be unlocked during the day for entry into the waiting area.

Hardware Set No. 302

For use on door #(s):

A104/1	A105/1	A107/1	A109/1	C108/1

Provide each SGL door(s) with the following:

Qty		Description	Catalog Number	Finish	Mfr
3	EA	HINGE	5BB1 4.5 X 4.5	652	IVE
1	EA	OFFICE/ENTRY LOCK	L9050T 17A	626	SCH
1	EA	FSIC CORE	23-030	626	SCH
1	EA	WALL STOP	WS406CCV	630	IVE
3	EA	SILENCER	SR64	GRY	IVE

Hardware Set No. 303

For use on door #(s):
A111/1

Provide each SGL door(s) with the following:

Qty		Description	Catalog Number	Finish	Mfr
3	EA	HINGE	5BB1 4.5 X 4.5	652	IVE
1	EA	STOREROOM LOCK	L9080T 17A	626	SCH
1	EA	FSIC CORE	23-030	626	SCH
1	EA	SURFACE CLOSER	4040XP TBSRT	689	LCN
1	EA	KICK PLATE	8400 10" X 2" LDW B4E	630	IVE
1	EA	WALL STOP/HOLDER	FS495	626	IVE
1	SET	SEALS	5020B	BRN	NGP

Hardware Set No. 304

For use on door #(s):
A100E/2

Provide each SGL door(s) with the following:

Qty		Description	Catalog Number	Finish	Mfr
3	EA	HW HINGE	5BB1HW 4.5 X 4.5 NRP	652	IVE
1	EA	CLASSROOM SECURITY	L9071T 17A XL11-986	626	SCH
2	EA	FSIC CORE	23-030	626	SCH
1	EA	SURFACE CLOSER	4040XP EDA TBSRT	689	LCN
1	EA	KICK PLATE	8400 10" X 2" LDW B4E	630	IVE
1	EA	MOP PLATE	8400 4" X 1" LDW B4E	630	IVE
3	EA	SILENCER	SR64	GRY	IVE

Hardware Set No. 305

For use on door #(s):
A112/2

Provide each SGL door(s) with the following:

Qty		Description	Catalog Number	Finish	Mfr
3	EA	HINGE	5BB1 4.5 X 4.5 NRP	652	IVE
1	EA	PASSAGE SET	L9010 17A	626	SCH
1	EA	FSIC CORE	23-030	626	SCH
1	EA	WALL STOP	WS406CCV	630	IVE
3	EA	SILENCER	SR64	GRY	IVE

Hardware Set No. 306

For use on door #(s):
A112/1

Provide each SGL door(s) with the following:

Qty		Description	Catalog Number	Finish	Mfr
3	EA	HW HINGE	5BB1HW 4.5 X 4.5	652	IVE
1	EA	CLASSROOM SECURITY	L9071T 17A XL11-986	626	SCH
2	EA	FSIC CORE	23-030	626	SCH
1	EA	SURFACE CLOSER	4040XP TBSRT	689	LCN
1	EA	KICK PLATE	8400 10" X 2" LDW B4E	630	IVE
1	EA	WALL STOP	WS406CCV	630	IVE
3	EA	SILENCER	SR64	GRY	IVE

Hardware Set No. 307

For use on door #(s):
A100D/1 B100/1 D100A/1 D200A/1

Provide each PR door(s) with the following:

Qty		Description	Catalog Number	Finish	Mfr
6	EA	HINGE	5BB1 4.5 X 4.5 NRP	652	IVE
1	SET	AUTO FLUSH BOLT	FB41P	630	IVE
1	EA	DUST PROOF STRIKE	DP2	626	IVE
1	EA	STOREROOM LOCK	L9080T 17A	626	SCH
1	EA	FSIC CORE	23-030	626	SCH
1	EA	COORDINATOR	COR X FL	628	IVE
2	EA	MOUNTING BRACKET	MB	689	IVE
2	EA	SURFACE CLOSER	4040XP EDA TBSRT	689	LCN
2	EA	KICK PLATE	8400 10" X 1" LDW B4E	630	IVE
2	EA	MOP PLATE	8400 4" X 1" LDW B4E	630	IVE
1	SET	SEALS	5020B	BRN	NGP
1	SET	SEALS	5060B	BRN	NGP

Hardware Set No. 308

For use on door #(s):
A113/1

Provide each SGL door(s) with the following:

Qty		Description	Catalog Number	Finish	Mfr
3	EA	HW HINGE	5BB1HW 4.5 X 4.5	652	IVE
1	EA	CLASSROOM SECURITY	L9071T 17A XL11-986	626	SCH
2	EA	FSIC CORE	23-030	626	SCH
1	EA	SURFACE CLOSER	4040XP TBSRT	689	LCN
1	EA	KICK PLATE	8400 10" X 2" LDW B4E	630	IVE
1	EA	WALL STOP/HOLDER	FS495	626	IVE
3	EA	SILENCER	SR64	GRY	IVE

Hardware Set No. 309

For use on door #(s):
A113C/1

Provide each SGL door(s) with the following:

Qty		Description	Catalog Number	Finish	Mfr
3	EA	HINGE	5BB1 4.5 X 4.5	652	IVE
1	EA	PASSAGE SET	L9010 17A	626	SCH
1	EA	MOP PLATE	8400 4" X 1" LDW B4E	630	IVE
1	EA	WALL STOP	WS406CCV	630	IVE
3	EA	SILENCER	SR64	GRY	IVE

Hardware Set No. 310

For use on door #(s):
A113A/1

Provide each SGL door(s) with the following:

Qty		Description	Catalog Number	Finish	Mfr
3	EA	HINGE	5BB1 4.5 X 4.5	652	IVE
1	EA	STOREROOM LOCK	L9080T 17A	626	SCH
1	EA	FSIC CORE	23-030	626	SCH
1	EA	OH STOP	90S J	630	GLY
3	EA	SILENCER	SR64	GRY	IVE

Hardware Set No. 311

For use on door #(s):
A106/1 A117/1 A120A/1 B105G/1 D107D/1 D207G/1

Provide each SGL door(s) with the following:

Qty		Description	Catalog Number	Finish	Mfr
3	EA	HW HINGE	5BB1HW 4.5 X 4.5	652	IVE
1	EA	PRIVACY W/DB & IND	L9496T OCCUPIED/VACANT 17A	626	SCH
1	EA	FSIC CORE	23-030	626	SCH
1	EA	SURFACE CLOSER	4040XP EDA TBSRT	689	LCN
1	EA	KICK PLATE	8400 10" X 2" LDW B4E	630	IVE
1	EA	WALL STOP	WS406CCV	630	IVE
1	SET	SEALS	5020B	BRN	NGP

Hardware Set No. 312

For use on door #(s):
A113B/1

Provide each SGL door(s) with the following:

Qty		Description	Catalog Number	Finish	Mfr
3	EA	HINGE	5BB1 4.5 X 4.5	652	IVE
1	EA	PRIVACY LOCK	L9040 17A	626	SCH
1	EA	WALL STOP	WS406CCV	630	IVE

3	EA	SILENCER	SR64	GRY	IVE

Hardware Set No. 313

For use on door #(s):
C110/2

Provide each SGL door(s) with the following:

Qty		Description	Catalog Number	Finish	Mfr
3	EA	HW HINGE	5BB1HW 4.5 X 4.5 NRP	652	IVE
1	EA	FIRE EXIT HARDWARE	98-L-NL-F-996-17	626	VON
1	EA	RIM CYLINDER	20-057-ICX	626	SCH
1	EA	FSIC CORE	23-030	626	SCH
1	EA	SURFACE CLOSER	4040XP CUSH TBSRT	689	LCN
1	EA	KICK PLATE	8400 10" X 2" LDW B4E	630	IVE
1	SET	SEALS	5020B	BRN	NGP

Hardware Set No. 314

For use on door #(s):
C109/1 D107C/1

Provide each SGL door(s) with the following:

Qty		Description	Catalog Number	Finish	Mfr
3	EA	HINGE	5BB1 4.5 X 4.5 NRP	652	IVE
1	EA	STOREROOM LOCK	L9080T 17A	626	SCH
1	EA	FSIC CORE	23-030	626	SCH
1	EA	OH STOP	90S	630	GLY
3	EA	SILENCER	SR64	GRY	IVE

Hardware Set No. 315

For use on door #(s):
B100C/1 C100E/1 C107/1 D100B/1 D200B/1

Provide each SGL door(s) with the following:

Qty		Description	Catalog Number	Finish	Mfr
3	EA	HW HINGE	5BB1HW 4.5 X 4.5 NRP	652	IVE
1	EA	STOREROOM LOCK	L9080T 17A	626	SCH
1	EA	FSIC CORE	23-030	626	SCH
1	EA	SURFACE CLOSER	4040XP EDA TBSRT	689	LCN
1	EA	KICK PLATE	8400 10" X 2" LDW B4E	630	IVE
1	EA	MOP PLATE	8400 4" X 1" LDW B4E	630	IVE
1	EA	WALL STOP	WS406CCV	630	IVE
1	SET	SEALS	5020B	BRN	NGP

Hardware Set No. 316

For use on door #(s):
C104/1 C106/1

Provide each SGL door(s) with the following:

Qty		Description	Catalog Number	Finish	Mfr
3	EA	HW HINGE	5BB1HW 4.5 X 4.5 NRP	652	IVE
1	EA	CLASSROOM SECURITY	L9071T 17A XL11-986	626	SCH
2	EA	FSIC CORE	23-030	626	SCH
1	EA	SURFACE CLOSER	4040XP CUSH TBSRT	689	LCN
1	EA	KICK PLATE	8400 10" X 2" LDW B4E	630	IVE
1	EA	MOP PLATE	8400 4" X 1" LDW B4E	630	IVE
3	EA	SILENCER	SR64	GRY	IVE

Hardware Set No. 317

For use on door #(s):
B105F/1 C100G/1 D207F/1

Provide each SGL door(s) with the following:

Qty		Description	Catalog Number	Finish	Mfr
3	EA	HINGE	5BB1 4.5 X 4.5 NRP	652	IVE
1	EA	STOREROOM LOCK	L9080T 17A	626	SCH
1	EA	PRIMUS CORE	20-740	626	SCH
1	EA	ELECTRIC STRIKE	6211 FSE DS	630	VON
1	EA	SURFACE CLOSER	4040XP CUSH TBSRT	689	LCN
1	EA	KICK PLATE	8400 10" X 2" LDW B4E	630	IVE
1	EA	MOP PLATE	8400 4" X 1" LDW B4E	630	IVE
3	EA	SILENCER	SR64	GRY	IVE
1	EA	DOOR CONTACT	679-05HM	BLK	SCE
1	EA	POWER SUPPLY	PS902 KL900	LGR	SCE
			CARD READER BY OTHERS		

DOOR OPERATION: Door normally closed and secure. Entry from secure side by valid credential or key override which will unlock electrified door. Free egress from inside at all times. Door position switch and request to exit connected to access control system for monitoring.

Hardware Set No. 318

For use on door #(s):
A118/1 A119/1

Provide each SGL door(s) with the following:

Qty		Description	Catalog Number	Finish	Mfr
3	EA	HINGE	5BB1 4.5 X 4.5	652	IVE
1	EA	OFFICE/ENTRY LOCK	L9050T 17A	626	SCH
1	EA	FSIC CORE	23-030	626	SCH
1	EA	OH STOP	90S J	630	GLY
3	EA	SILENCER	SR64	GRY	IVE

Hardware Set No. 319

For use on door #(s):
A115/1

Provide each PR door(s) with the following:

Qty		Description	Catalog Number	Finish	Mfr
6	EA	HW HINGE	5BB1HW 4.5 X 4.5 NRP	652	IVE
1	EA	PANIC HARDWARE	CD-9849-EO-LBL	626	VON
1	EA	PANIC HARDWARE	CD-9849-NL-OP-110-LBL	626	VON
1	EA	RIM CYLINDER	20-057-ICX	626	SCH
2	EA	MORTISE CYLINDER	20-061-ICX	626	SCH
3	EA	FSIC CORE	23-030	626	SCH
2	EA	90 DEG OFFSET PULL	8190 10" O	630	IVE
2	EA	SURFACE CLOSER	4040XP HCUSH TBSRT	689	LCN

Hardware Set No. 320

For use on door #(s):
C114/1 C114/2 C121/1

Provide each PR door(s) with the following:

Qty		Description	Catalog Number	Finish	Mfr
6	EA	HW HINGE	5BB1HW 4.5 X 4.5 NRP	652	IVE
1	EA	KEYED FIRE RATED REMOVABLE MULLION	KR9954-STAB	689	VON
2	EA	FIRE EXIT HARDWARE	98L-F-2-SI-996-17	626	VON
4	EA	RIM CYLINDER	20-057-ICX	626	SCH
1	EA	MORTISE CYLINDER	20-061-ICX	626	SCH
5	EA	FSIC CORE	23-030	626	SCH
2	EA	SURFACE CLOSER	4040XP CUSH TBSRT	689	LCN
2	EA	KICK PLATE	8400 10" X 2" LDW B4E	630	IVE
2	EA	MOP PLATE	8400 4" X 1" LDW B4E	630	IVE
1	SET	SEALS	5020B	BRN	NGP
1	SET	SEALS	5060B	BRN	NGP
1	EA	MULLION SEAL	5100	BLK	NGP

Hardware Set No. 321

For use on door #(s):
C123/1

Provide each SGL door(s) with the following:

Qty		Description	Catalog Number	Finish	Mfr
3	EA	HW HINGE	5BB1HW 4.5 X 4.5 NRP	652	IVE
1	EA	CLASSROOM SECURITY	L9071T 17A XL11-986	626	SCH
2	EA	FSIC CORE	23-030	626	SCH
1	EA	MOUNTING BRACKET	MB	689	IVE
1	EA	SURFACE CLOSER	4040XP EDA TBSRT	689	LCN
1	EA	KICK PLATE	8400 10" X 2" LDW B4E	630	IVE
1	EA	MOP PLATE	8400 4" X 1" LDW B4E	630	IVE
1	EA	WALL STOP/HOLDER	FS495	626	IVE
1	SET	SEALS	107NA	CL	NGP
1	EA	DOOR BOTTOM	522N	AL	NGP

INSTALLATION NOTE: Mount 107NA sound seal and MB mounting bracket prior to installing door closer. Note closer is lower on the door to accommodate sound seal.

Hardware Set No. 322

For use on door #(s):
C123A/1

Provide each SGL door(s) with the following:

Qty		Description	Catalog Number	Finish	Mfr
3	EA	HINGE	5BB1 4.5 X 4.5 NRP	652	IVE
1	EA	CLASSROOM LOCK	L9070T 17A	626	SCH
1	EA	FSIC CORE	23-030	626	SCH
1	EA	SURFACE CLOSER	4041 DEL CUSH TBSRT	689	LCN
1	EA	KICK PLATE	8400 10" X 2" LDW B4E	630	IVE
1	SET	SEALS	5020B	BRN	NGP

Hardware Set No. 323

For use on door #(s):
C125A/1 C125B/1

Provide each SGL door(s) with the following:

Qty		Description	Catalog Number	Finish	Mfr
3	EA	HINGE	5BB1 4.5 X 4.5 NRP	652	IVE
1	EA	CLASSROOM LOCK	L9070T 17A	626	SCH
1	EA	FSIC CORE	23-030	626	SCH
1	EA	OH STOP	90S	630	GLY
3	EA	SILENCER	SR64	GRY	IVE

Hardware Set No. 324

For use on door #(s):
C118/1

Provide each SGL door(s) with the following:

Qty		Description	Catalog Number	Finish	Mfr
3	EA	HINGE	5BB1 4.5 X 4.5 NRP	652	IVE
1	EA	OFFICE/ENTRY LOCK	L9050T 17A	626	SCH
1	EA	FSIC CORE	23-030	626	SCH
1	EA	SURFACE CLOSER	4040XP CUSH TBSRT	689	LCN
1	EA	KICK PLATE	8400 10" X 2" LDW B4E	630	IVE
1	SET	SEALS	5020B	BRN	NGP

Hardware Set No. 325

For use on door #(s):
C115/1 C117/1

Provide each PR door(s) with the following:

Qty		Description	Catalog Number	Finish	Mfr
6	EA	HW HINGE	5BB1HW 4.5 X 4.5 NRP	652	IVE
1	SET	AUTO FLUSH BOLT	FB31P	630	IVE
1	EA	DUST PROOF STRIKE	DP2	626	IVE
1	EA	STOREROOM LOCK	L9080T 17A	626	SCH
1	EA	FSIC CORE	23-030	626	SCH
1	EA	COORDINATOR	COR X FL	628	IVE
2	EA	MOUNTING BRACKET	MB	689	IVE
2	EA	SURFACE CLOSER	4041 DEL CUSH TBSRT	689	LCN
2	EA	KICK PLATE	8400 16" X 1" LDW B4E	630	IVE
1	SET	SEALS	5020B	BRN	NGP
1	SET	SEALS	5060B	BRN	NGP

Hardware Set No. 326

For use on door #(s):
C122/1

Provide each PR door(s) with the following:

Qty		Description	Catalog Number	Finish	Mfr
2	EA	CONT. HINGE	715	630	IVE
1	SET	AUTO FLUSH BOLT	FB31P	630	IVE
1	EA	DUST PROOF STRIKE	DP2	626	IVE
1	EA	CLASSROOM LOCK	L9070T 17A	626	SCH
1	EA	FSIC CORE	23-030	626	SCH
1	EA	COORDINATOR	COR X FL	628	IVE
2	EA	MOUNTING BRACKET	MB	689	IVE
2	EA	SURFACE CLOSER	4041 DEL CUSH TBSRT	689	LCN
2	EA	KICK PLATE	8400 16" X 1" LDW B4E	630	IVE
1	SET	SEALS	5020B	BRN	NGP
1	SET	SEALS	5060B	BRN	NGP

Hardware Set No. 327

For use on door #(s):
C116A/1

Provide each SGL door(s) with the following:

Qty		Description	Catalog Number	Finish	Mfr
3	EA	HW HINGE	5BB1HW 4.5 X 4.5 NRP	652	IVE
1	EA	STOREROOM LOCK	L9080T 17A	626	SCH
1	EA	FSIC CORE	23-030	626	SCH
1	EA	SURFACE CLOSER	4041 DEL CUSH TBSRT	689	LCN
1	EA	KICK PLATE	8400 16" X 1" LDW B4E	630	IVE
1	SET	SEALS	5020B	BRN	NGP

Hardware Set No. 328

For use on door #(s):
C126/1 C126/2

Provide each SGL door(s) with the following:

Qty		Description	Catalog Number	Finish	Mfr
3	EA	HW HINGE	5BB1HW 4.5 X 4.5 NRP	652	IVE
1	EA	CLASSROOM DEAD LOCK	L463T	626	SCH
1	EA	FSIC CORE	23-030	626	SCH
1	EA	PUSH PLATE	8200 4" X 16"	630	IVE
1	EA	PULL PLATE	8303 10" 4" X 16"	630	IVE
1	EA	SURFACE CLOSER	4040XP EDA TBSRT	689	LCN
1	EA	KICK PLATE	8400 10" X 2" LDW B4E	630	IVE
1	EA	MOP PLATE	8400 4" X 1" LDW B4E	630	IVE
1	EA	WALL STOP/HOLDER	FS495	626	IVE
3	EA	SILENCER	SR64	GRY	IVE

Hardware Set No. 329

For use on door #(s):
C112/1

Provide each SGL door(s) with the following:

Qty		Description	Catalog Number	Finish	Mfr
1	EA	CONT. HINGE	224HD	628	IVE
1	EA	CLASSROOM SECURITY	L9071T 17A XL11-986	626	SCH
2	EA	FSIC CORE	23-030	626	SCH
1	EA	SURFACE CLOSER	4040XP HCUSH TBSRT	689	LCN

Hardware Set No. 330

For use on door #(s):
C127/1

Provide each SGL door(s) with the following:

Qty		Description	Catalog Number	Finish	Mfr
3	EA	HINGE	5BB1 4.5 X 4.5 NRP	652	IVE
1	EA	OFFICE/ENTRY LOCK	L9050T 17A	626	SCH
1	EA	FSIC CORE	23-030	626	SCH
1	EA	MOP PLATE	8400 4" X 1" LDW B4E	630	IVE
1	EA	KICK PLATE	8400 4" X 2" LDW B4E	630	IVE
1	EA	WALL STOP	WS406CCV	630	IVE

Hardware Set No. 331

For use on door #(s):
C132/1

Provide each SGL door(s) with the following:

Qty		Description	Catalog Number	Finish	Mfr
3	EA	HW HINGE	5BB1HW 4.5 X 4.5	652	IVE
1	EA	PUSH PLATE	8200 4" X 16"	630	IVE
1	EA	PULL PLATE	8303 10" 4" X 16"	630	IVE
1	EA	SURFACE CLOSER	4040XP EDA TBSRT	689	LCN
1	EA	KICK PLATE	8400 10" X 2" LDW B4E	630	IVE
1	EA	MOP PLATE	8400 4" X 1" LDW B4E	630	IVE
1	EA	KICK PLATE	8400 4" X 2" LDW B4E	630	IVE
1	EA	WALL STOP	WS406CCV	630	IVE
3	EA	SILENCER	SR64	GRY	IVE

Hardware Set No. 332

For use on door #(s):
C133/1

Provide each SGL door(s) with the following:

Qty		Description	Catalog Number	Finish	Mfr
3	EA	HW HINGE	5BB1HW 4.5 X 4.5	652	IVE
1	EA	PRIVACY W/DB & IND	LV9496T 17A L583-363	626	SCH
1	EA	FSIC CORE	23-030	626	SCH
1	EA	SURFACE CLOSER	4040XP TBSRT	689	LCN
1	EA	KICK PLATE	8400 10" X 2" LDW B4E	630	IVE
1	EA	MOP PLATE	8400 4" X 1" LDW B4E	630	IVE
1	EA	WALL STOP	WS406CCV	630	IVE
3	EA	SILENCER	SR64	GRY	IVE

Hardware Set No. 333

For use on door #(s):
C131/1

Provide each SGL door(s) with the following:

Qty		Description	Catalog Number	Finish	Mfr
3	EA	HW HINGE	5BB1HW 4.5 X 4.5	652	IVE
1	EA	CLASSROOM LOCK	L9070T 17A	626	SCH
1	EA	FSIC CORE	23-030	626	SCH
1	EA	OH STOP	90S	630	GLY
1	EA	KICK PLATE	8400 10" X 2" LDW B4E	630	IVE
1	EA	MOP PLATE	8400 4" X 1" LDW B4E	630	IVE
3	EA	SILENCER	SR64	GRY	IVE

Hardware Set No. 334

For use on door #(s):
C114A/1 C201/1

Provide each SGL door(s) with the following:

Qty		Description	Catalog Number	Finish	Mfr
3	EA	HW HINGE	5BB1HW 4.5 X 4.5	652	IVE
1	EA	STOREROOM LOCK	L9080T 17A	626	SCH
1	EA	FSIC CORE	23-030	626	SCH
1	EA	SURFACE CLOSER	4041 DEL TBSRT	689	LCN
1	EA	KICK PLATE	8400 10" X 2" LDW B4E	630	IVE
1	EA	MOP PLATE	8400 4" X 1" LDW B4E	630	IVE
1	EA	WALL STOP	WS406CCV	630	IVE
1	SET	SEALS	5020B	BRN	NGP

Hardware Set No. 335

For use on door #(s):
B105C/1 D207D/1

Provide each SGL door(s) with the following:

Qty		Description	Catalog Number	Finish	Mfr
3	EA	HINGE	5BB1 4.5 X 4.5	652	IVE
1	EA	CLASSROOM LOCK	L9070T 17A	626	SCH
1	EA	FSIC CORE	23-030	626	SCH
1	EA	WALL STOP	WS406CCV	630	IVE
3	EA	SILENCER	SR64	GRY	IVE

Hardware Set No. 336

For use on door #(s):
B105B/1 D207B/1

Provide each PR door(s) with the following:

Qty		Description	Catalog Number	Finish	Mfr
6	EA	HINGE	5BB1 4.5 X 4.5 NRP	652	IVE
2	EA	MANUAL FLUSH BOLT	FB458	626	IVE
1	EA	DUST PROOF STRIKE	DP2	626	IVE
1	EA	STOREROOM LOCK	L9080T 17A	626	SCH
1	EA	FSIC CORE	23-030	626	SCH
2	EA	OH STOP	90S	630	GLY
2	EA	SILENCER	SR64	GRY	IVE

Hardware Set No. 337

For use on door #(s):
110A/2 B101A/1 B101A/2 B102A/1 B102A/2 B106A/1
B106A/2 B107A/1 B107A/2 B110A/1

Provide each DD door(s) with the following:

Qty		Description	Catalog Number	Finish	Mfr
4	EA	HINGE	5BB1 4.5 X 4.5	652	IVE
1	EA	DUTCH DOOR BOLT	054	626	IVE
1	EA	PASSAGE SET	L9010 17A	626	SCH
1	EA	FSIC CORE	23-030	626	SCH
1	EA	WALL STOP	WS406CCV	630	IVE
4	EA	SILENCER	SR64	GRY	IVE

Hardware Set No. 338

For use on door #(s):
A120/1

Provide each SGL door(s) with the following:

Qty		Description	Catalog Number	Finish	Mfr
3	EA	HINGE	5BB1 4.5 X 4.5	652	IVE
1	EA	CLASSROOM SECURITY	L9071T 17A XL11-986	626	SCH
1	EA	FSIC CORE	23-030	626	SCH
1	EA	SURFACE CLOSER	4040XP TBSRT	689	LCN
1	EA	KICK PLATE	8400 10" X 2" LDW B4E	630	IVE
1	EA	WALL STOP/HOLDER	FS495	626	IVE
3	EA	SILENCER	SR64	GRY	IVE

Hardware Set No. 339

For use on door #(s):
A120/2

Provide each SGL door(s) with the following:

Qty		Description	Catalog Number	Finish	Mfr
3	EA	HINGE	5BB1 4.5 X 4.5 NRP	652	IVE
1	EA	CLASSROOM SECURITY	L9071T 17A XL11-986	626	SCH
2	EA	FSIC CORE	23-030	626	SCH
1	EA	SURFACE CLOSER	4040XP HCUSH TBSRT	689	LCN
1	EA	KICK PLATE	8400 10" X 2" LDW B4E	630	IVE
3	EA	SILENCER	SR64	GRY	IVE

Hardware Set No. 340

For use on door #(s):
B101B/1 B102B/1 B106B/1 B107B/1 B110B/1

Provide each SGL door(s) with the following:

Qty		Description	Catalog Number	Finish	Mfr
3	EA	HINGE	5BB1 4.5 X 4.5	652	IVE
1	EA	PASSAGE SET	L9010 17A	626	SCH
1	EA	OH STOP	90S	630	GLY
3	EA	SILENCER	SR64	GRY	IVE

Hardware Set No. 341

For use on door #(s):
C202/1

Provide each SGL door(s) with the following:

Qty		Description	Catalog Number	Finish	Mfr
3	EA	HINGE	5BB1 4.5 X 4.5	652	IVE
1	EA	STOREROOM LOCK	L9080T 17A	626	SCH
1	EA	FSIC CORE	23-030	626	SCH
1	EA	SURFACE CLOSER	4040XP TBSRT	689	LCN
1	EA	KICK PLATE	8400 10" X 2" LDW B4E	630	IVE
1	EA	WALL STOP	WS406CCV	630	IVE
1	SET	SEALS	5020B	BRN	NGP

Hardware Set No. 342

For use on door #(s):
C105/1

Provide each PR door(s) with the following:

Qty		Description	Catalog Number	Finish	Mfr
6	EA	HINGE	5BB1 4.5 X 4.5	652	IVE
1	SET	AUTO FLUSH BOLT	FB42	630	IVE
1	EA	STOREROOM LOCK	L9080T 17A	626	SCH
1	EA	FSIC CORE	23-030	626	SCH
1	EA	COORDINATOR	COR7G	626	IVE
2	EA	SURFACE CLOSER	4040XP TBSRT	689	LCN
2	EA	KICK PLATE	8400 10" X 1" LDW B4E	630	IVE
2	EA	WALL STOP	WS406CCV	630	IVE
1	SET	SEALS	5020B	BRN	NGP
1	SET	SEALS	5060B	BRN	NGP

Hardware Set No. 343

For use on door #(s):
C123A/2

Provide each SGL door(s) with the following:

Qty		Description	Catalog Number	Finish	Mfr
3	EA	HINGE	5BB1 4.5 X 4.5 NRP	652	IVE
1	EA	DBL CYL STORE W/DB	L9466T 17A	626	SCH
2	EA	FSIC CORE	23-030	626	SCH
1	EA	SURFACE CLOSER	4041 DEL CUSH TBSRT	689	LCN
1	EA	KICK PLATE	8400 10" X 2" LDW B4E	630	IVE
1	SET	SEALS	5020B	BRN	NGP

Hardware Set No. 344

For use on door #(s):
A116/1 D107B/1

Provide each SGL door(s) with the following:

Qty		Description	Catalog Number	Finish	Mfr
3	EA	HINGE	5BB1 4.5 X 4.5 NRP	652	IVE
1	EA	STOREROOM LOCK	L9080T 17A	626	SCH
1	EA	PRIMUS CORE	20-740	626	SCH
1	EA	ELECTRIC STRIKE	6211 FSE DS	630	VON
1	EA	SURFACE CLOSER	4040XP CUSH TBSRT	689	LCN
1	EA	KICK PLATE	8400 10" X 2" LDW B4E	630	IVE
3	EA	SILENCER	SR64	GRY	IVE
1	EA	DOOR CONTACT	679-05HM	BLK	SCE
1	EA	POWER SUPPLY	PS902 KL900	LGR	SCE
			CARD READER BY OTHERS		

DOOR OPERATION: Door normally closed and secure. Entry from secure side by valid credential or key override which will unlock electrified door. Free egress from inside at all times. Door position switch and request to exit connected to access control system for monitoring.

Hardware Set No. 345

For use on door #(s):
D207A/1 D207C/1

Provide each SGL door(s) with the following:

Qty		Description	Catalog Number	Finish	Mfr
3	EA	HW HINGE	5BB1HW 4.5 X 4.5	652	IVE
1	EA	CLASSROOM SECURITY	L9071T 17A XL11-986	626	SCH
2	EA	FSIC CORE	23-030	626	SCH
1	EA	SURFACE CLOSER	4040XP TBSRT	689	LCN
1	EA	KICK PLATE	8400 10" X 2" LDW B4E	630	IVE
1	EA	WALL STOP	WS406CCV	630	IVE
3	EA	SILENCER	SR64	GRY	IVE

Hardware Set No. 346

For use on door #(s):
A108/1 A110/1

Provide each SGL door(s) with the following:

Qty		Description	Catalog Number	Finish	Mfr
3	EA	HINGE	5BB1 4.5 X 4.5	652	IVE
1	EA	OFFICE/ENTRY LOCK	L9050T 17A	626	SCH
1	EA	FSIC CORE	23-030	626	SCH
1	EA	KICK PLATE	8400 4" X 2" LDW B4E	630	IVE
1	EA	WALL STOP	WS406CCV	630	IVE
3	EA	SILENCER	SR64	GRY	IVE

END OF SECTION

SECTION 088000 - GLAZING

PART 1 - GENERAL

1.1 RELATED DOCUMENTS

A. Drawings and general provisions of the Contract, including General and Supplementary Conditions and Division 1 Specification Sections, apply to this Section.

1.2 SUMMARY

A. This Section includes glazing for the following products, including those specified in other Sections where glazing requirements are specified by reference to this Section:

1. Interior vision lites.
2. High performance architectural insulating glass
3. Entrances and other door glazing.
4. Fire Rated Glazing.

B. Related Sections: The following sections contain requirements that relate to this Section.

1. Division 8 Section “Aluminum Storefronts and Entrances” for aluminum framed entrance requirements.
2. Division 8 Section “Hollow Metal Doors and Frames” for interior hollow metal frames for vision lites.
3. Division 8 Section “Glazed Aluminum Curtain Walls” for curtain wall requirements.
4. Division 8 Section “Decorative Glass Glazing” for decorative glass requirements.
5. Division 10 Section “Display Cases” - pre-glazed as part of that section.

1.3 DEFINITIONS

A. Manufacturer is used in this Section to refer to a firm that produces primary glass or fabricated glass as defined in the referenced glazing standard.

B. Deterioration of Coated Glass: Defects developed from normal use that are attributed to the manufacturing process and not to causes other than glass breakage and practices for maintaining and cleaning coated glass contrary to manufacturer’s directions. Defects include peeling, cracking, and other indications of deterioration in metallic coating.

C. Deterioration of Laminated Glass: Defects developed from normal use that are attributed to the manufacturing process and not to glass breakage and practices for maintaining and cleaning laminated glass contrary to manufacturer’s directions. Defects include edge separation, delamination materially obstructing vision through glass, and blemishes exceeding those allowed by referenced laminated glass standard.

D. Deterioration of Insulating Glass: Failure of the hermetic seal under normal use due to causes other than glass breakage and improper practices for maintaining, and cleaning insulating glass. Evidence of failure is the obstruction of vision by dust, moisture, or film on the interior surfaces of glass. Improper practices for maintaining and cleaning glass do not comply with the manufacturer’s directions.

1.4 SYSTEM PERFORMANCE REQUIREMENTS

A. General: Provide glazing systems that are produced, fabricated, and installed to withstand normal thermal movement, wind loading, and impact loading (where applicable), without failure including loss or glass breakage attributable to the following: defective manufacture, fabrication, and installation; failure of sealants or gaskets to remain watertight and airtight; deterioration of glazing materials; and other defects in construction.

B. Glass Design: Glass thicknesses are not indicated on Drawings. Confirm glass thicknesses by analyzing Project loads and in-service conditions. Provide glass lites for the various size openings in the thicknesses and strengths to meet or exceed the following criteria:

1. Minimum glass thickness, nominally, of lites in exterior walls is 6.0 mm (0.23 inch).
2. Tinted and heat-absorbing glass thicknesses for each tint indicated are the same throughout Project.
3. Minimum glass thicknesses of lites, whether composed of annealed or heat-treated glass, are selected so the worst-case probability of failure does not exceed the following:
   a. 8 lites per 1000 for lites set vertically or not over 15 degrees off vertical and under wind action. Determine minimum thickness of monolithic annealed glass according to ASTM E 1300. For other than monolithic annealed glass, determine thickness per glass manufacturer's standard method of analysis including applying adjustment factors to ASTM E 1300 based on type of glass.

C. Normal thermal movement results from the following maximum change (range) in ambient and surface temperatures acting on glass-framing members and glazing components. Base engineering calculation on materials' actual surface temperatures due, to both solar heat gain and nighttime sky heat loss.

1. Temperature Change (Range): 120 deg F (67 deg C), ambient; 180 deg F (100 deg C), material surfaces.

1.5 CODE COMPLIANCE

A. Contractors (general contractors, subcontractors, suppliers, installers, et.al.) are responsible for complying with applicable codes and standards with regards to provision and installation of the proper glazing materials. Drawings and specifications may not identify all glass type locations.

1.6 SUBMITTALS

A. General: Submit the following according to Conditions of Contract and Division 1 Specification Sections.

B. Product data for each glass product and glazing material indicated in conjunction with a glazing schedule listing glass types and thicknesses for each size opening and location.

C. Samples for verification purposes of 12-inch-square samples of each type of glass indicated except for clear monolithic glass products, and 12-inch-long samples of each color required (except black) for each type of sealant or gasket exposed to view. Install sealant or gasket sample between two strips of material representative in color of the adjoining framing system.

D. Product certificates signed by glazing materials manufacturers certifying that their products comply with specified requirements.

E. Compatibility and adhesion test reports from sealant manufacturer indicating that glazing materials were tested for compatibility and adhesion with glazing sealants. Include sealant manufacturer's interpretation of test results relative to sealant performance and recommendations for primers and substrate preparation needed for adhesion.

F. Compatibility test report from manufacturer of insulating glass edge sealant indicating that glass edge sealants were tested for compatibility with other glazing materials including sealants, glazing tape, gaskets, setting blocks, and edge blocks.

G. Product test reports for each type of glazing sealant and gasket indicated, evidencing compliance with requirements specified.

H. Maintenance data for glass and other glazing materials to include in Operating and Maintenance Manual specified in Division 1.

1.7 QUALITY ASSURANCE

A. Glazing Publications: Comply with published recommendations of glass product manufacturers and organizations below, except where more stringent requirements are indicated. Refer to these publications for glazing terms not otherwise defined in this Section or in referenced standards.

1. FGMA Publications: “FGMA Glazing Manual.”
2. LSGA Publications: “LSGA Design Guide.”
3. SIGMA Publications: TM-3000 "Vertical Glazing Guidelines".

B. Safety Glass: Products complying with ANSI Z97.1 and testing requirements of 16 CFR Part 1201 for Category II materials.

C. Fire-Resistive Glazing Products for Door Assemblies: Products identical to those tested per ASTM E 152, labeled and listed by UL or another testing and inspecting agency acceptable to authorities having jurisdiction.

D. Fire-Resistive Glazing Products for Window Assemblies: Products identical to those tested per ASTM E 163, labeled and listed by UL or another testing and inspecting agency acceptable to authorities having jurisdiction.

E. Insulating Glass Certification Program: Provide insulating glass units permanently marked either on spacers or at least one component lite of units with appropriate certification label of inspecting and testing agency indicated below:

1. Insulating Glass Certification Council (IGCC).
2. Associated Laboratories, Inc. (ALI).
3. National Certified Testing Laboratories (NCTL).

F. Glazier Qualifications: Engage an experienced glazier who has completed glazing similar in material, design, and extent to that indicated for Project with a record of successful in-service performance.

G. Single-Source Responsibility for Glass: Obtain glass from one source for each product indicated below:

1. Primary glass of each (ASTM C 1036) type and class indicated.
2. Heat-treated glass of each (ASTM C 1048) condition indicated.
3. Laminated glass of each (ASTM C 1172) kind indicated.
4. Insulating glass of each construction indicated.

H. Single-Source Responsibility for Glazing Accessories: Obtain glazing accessories from one source for each product and installation method indicated.

1. Testing is not required when glazing sealant manufacturer can submit required preparation data that is acceptable to Architect and is based on previous testing of current sealant products for adhesion to and compatibility with submitted glazing materials.

1.8 DELIVERY, STORAGE, AND HANDLING

A. Protect glazing materials to comply with manufacturer's directions and as needed to prevent damage to glass and glazing materials from condensation, temperature changes, direct exposure to sun, or other causes.

1.9 PROJECT CONDITIONS

A. Environmental Conditions: Do not proceed with glazing when ambient and substrate temperature conditions are outside the limits permitted by glazing materials manufacturer or when glazing channel substrates are wet from rain, frost, condensation, or other causes.

1.10 WARRANTY

A. General: Warranties specified in this Article shall not deprive the Owner of other rights the Owner may have under other provisions of the Contract Documents and will be in addition to and run concurrent with other warranties made by the Contractor under requirements of the Contract Documents.

1. Warranty Period: Manufacturer's standard but not less than 5 years after date of Substantial Completion.

B. Manufacturer's Warranty on Laminated Glass: Submit written warranty signed by insulating glass manufacturer agreeing to furnish replacements for those laminated glass units that deteriorate as defined in the "Definitions" article, f.o.b. point of manufacture, freight allowed Project site, within specified warranty period indicated below. Warranty covers only deterioration due to normal conditions of use and not to handling, installing, and cleaning practices contrary to glass manufacturer's published instructions.

1. Warranty Period: Manufacturer's standard but not less than 5 years after date of Substantial Completion.

PART 2 - PRODUCTS

2.1 MANUFACTURERS

A. Available Products: Subject to compliance with requirements, products that may be incorporated in the Work include, but are not limited to the following (note additional manufacturers in specific product areas):
1. Pilkington Group
2. Guardian Industries Corp.
3. PPG Industries, Inc.
4. Oldcastle Building Envelope
5. Viracon, Inc.

2.2 PRIMARY FLOAT GLASS PRODUCTS

A. Float Glass: ASTM C 1036, Type I (transparent glass, flat), Class as indicated below, and Quality q3 (glazing select).

3. Class 1 (clear) unless otherwise indicated, all interior windows and interior sheet of insulated exterior windows.
4. Class 2 (tinted, heat-absorbing, and light-reducing) at exterior surface sheets as indicated.

B. Refer to requirements for sealed insulating glass units for performance characteristics of assembled units composed of tinted glass, coated or uncoated, relative to visible light transmittance, U-values, shading coefficient, and visible reflectance.

2.3 HEAT-TREATED FLOAT GLASS

A. Uncoated, Tinted, Heat-Treated Float Glass: ASTM C 1048, Condition C (uncoated glass), Type I (transparent glass, flat), Class 2 (tinted heat-absorbing and light-reducing), Quality q3 (glazing select), with tint color and performance characteristics for 6.0-mm-thick (0.23-inch-thick) glass matching those indicated for annealed primary tinted float glass; kind as indicated below:

4. Kind FT (fully tempered) where indicated or required.

2.4 CERAMIC-COATED GLASS

A. Ceramic-Coated Spandrel Glass: ASTM C 1048, Condition B (spandrel glass, one-surface ceramic coated), Type 1 (transparent glass, flat), Quality q3 (glazing select). Color to be chosen from manufacturer's full line of

standard colors (line must include black and gray).

2.5 FIRE-RATED GLAZING PRODUCTS

A. Laminated Ceramic Glazing Material: Proprietary Category II safety glazing product in the form of 2 lites of clear ceramic glazing material laminated together to produce a laminated lite of 5/16-inch (8-mm) nominal thickness; polished on both surfaces; weighing 4 lb/sq.ft. (19.5 kg/sq.m); and as follows:

1. Fire-Protection Rating: As indicated for the assembly in which glazing material is installed, and permanently labeled by a testing and inspecting agency acceptable to authorities having jurisdiction.
2. Polished on both surfaces, transparent.
3. Product: “FireLite Plus” by Nippon Electric Glass Co., Ltd., and distributed by Technical Glass Products.

2.6 INSULATING GLASS PRODUCTS

A. Sealed Insulating Glass Units: Preassembled units consisting of organically sealed lites of glass separated by dehydrated air spaces complying with ASTM E 774 and with other requirements indicated, including those in Insulating Glass Product Data Sheet at the end of this Section.

1. For properties of individual glass lites making up units, refer to requirements specified elsewhere in this Section applicable to types, classes, kinds, and conditions of glass products comprising lites of insulating glass units.
2. Provide heat-treated, coated float glass of kind indicated or, if not otherwise indicated, Kind HS (heat strengthened) where recommended by manufacturer to comply with system performance requirements specified and Kind FT (fully tempered) where safety glass is designated or required.
3. Performance characteristics designated for coated insulating glass are nominal values based on manufacturer's published test data for units with lites 6.0 mm (0.23 inch) thick and nominal 1/2-inch dehydrated space between lites, unless otherwise indicated.
4. U-values are expressed as Btu/hour x sq.ft. x deg F.

B. Construction Characteristics:

1. Air Space Width: Nominal ½ inch measured perpendicularly from surfaces of glass lites at unit’s edge.
2. Gas Filling: Fill air space with argon.
3. Sealing System: Dual seal, primary and secondary sealants: manufacturer’s standard sealants.
4. Spacer Specifications: Manufacturer’s standard.
5. Desiccant: Either molecular sieve or silica gel or blend of both.
6. Corner Construction: Manufacturer’s standard corner construction.
7. Color of Spacer: Color as selected by Architect from manufacturer’s standard colors.

C. Insulating Glass Types:

1. Type GL-1 Units: All units except as noted; Each Lite: 6.0 mm (0.23 inch).
   A. Outdoor Lite: Class 2 (tinted, heat-absorbing and light-reducing) float glass with tint color: PPG Azuria is basis of design
   B. Indoor Lite: Class 1 (clear) float glass with Low E coating on #3 surface; PPG Sungate 500
   C. Performance Characteristics:
      a. Visible Light Transmittance: 57%
      b. U-Value Winter: 0.35; U Value: Summer: 0.35
      c. Shading Coefficient: 0.40
      d. Solar Heat Gain Coefficient: 0.34
      e. Outdoor Visible Light Reflectance: 12%

2. Type GL-2 Units: At Curtainwall

A. Outdoor Lite: Clear, low reflective equivalent to PPG Solarban 70XL (2)
B. Indoor Lite: Class 1 (clear) float glass
C. Performance Characteristics:
a. Visible Light Transmittance: 64%
b. U-Value Winter: 0.28; U Value: Summer: 0.26
c. Shading Coefficient: 0.32
d. Solar Heat Gain Coefficient: 0.27
e. Outdoor Visible Light Reflectance: 12%

3. Type GL-3 Units: At Curtainwall
A. Outdoor Lite: Clear, low reflective equivalent to PPG Solarban 70XL (2)
B. Indoor Lite: Equivalent to Walker Textures Acid Etched 1 Face Opaque
C. Performance Characteristics:
a. Visible Light Transmittance: 64%
b. U-Value Winter: 0.28; U Value: Summer: 0.26
c. Shading Coefficient: 0.32
d. Solar Heat Gain Coefficient: 0.27
e. Outdoor Visible Light Reflectance: 12%

.

4. Performance of Insulated Glass: Performance Values listed are minimum acceptable values for insulated glass.

2.7 LAMINATED SAFETY GLASS

A. Provide Category II safety glazing comprised of laminated Clear Float Glass, annealed and heat strengthened with minimum 0.030 inch thick individual layers.

2.8 FABRICATION OF GLASS AND OTHER GLAZING PRODUCTS

C. Fabricate glass and other glazing products in sizes required to glaze openings indicated for Project, with edge and face clearances, edge and surface conditions, and bit complying with recommendations of product manufacturer and referenced glazing standard as required to comply with system performance requirements.

2.9 GLAZING TAPES

C. Back-Bedding Mastic Glazing Tape: Preformed, butyl-based elastomeric tape with a solids content of 100 percent, nonstaining and nonmigrating in contact with nonporous surfaces, with or without spacer rod as recommended by tape and glass manufacturers for application indicated, packaged on rolls with a release paper backing, and complying with AAMA 800 for products indicated below.

1. AAMA 804.1.

D. Available Products: Subject to compliance with requirements, glazing tape that may be incorporated in the Work include, but is not limited to, the following:

E. Products: Subject to compliance with requirements, provide one of the following:

1. Back-Bedding Mastic Glazing Tape Without Spacer Rod:

a. PTI 303 Glazing Tape (shimless), Protective Treatments, Inc.
b. S-M 5700 Poly-Glaze Tape Sealant, Schnee-Morehead, Inc.
c. Tremco 440 Tape, Tremco Inc.
d. Extru-Seal, Pecora Corp.
e. PTI 606 Architectural Sealant Tape, Protective Treatments, Inc.

2.10 ELASTOMERIC GLAZING SEALANTS AND PREFORMED GLAZING TAPES

A. General: Provide products of type indicated, complying with the following requirements:

1. Compatibility: Select glazing sealants and tapes of proven compatibility with other materials with which they will come into contact, including glass products, seals of insulating glass units, and glazing channel substrates, under conditions of installation and service, as demonstrated by testing and field experience.
2. Suitability: Comply with sealant and glass manufacturer's recommendations for selection of glazing sealants and tapes which have performance characteristics suitable for applications indicated and conditions at time of installation.

3. Elastomeric Sealant Standard: Provide manufacturer’s standard chemically curing, elastomeric sealant of base polymer indicated which complies with ASTM C 920 requirements, including those for Type, Grade, Class and Uses.

4. Colors: Provide color of exposed sealants indicated or, if not otherwise indicated, as selected by Architect from manufacturer’s standard colors.

2.11 GLAZING GASKETS

A. Dense Elastomeric Compression Seal Gaskets: Molded or extruded gaskets of material indicated below, complying with ASTM C 864, of profile and hardness required to maintain watertight seal:

1. Neoprene.
2. EPDM.
3. Thermoplastic polyolefin rubber.
4. Any material indicated above.

B. Cellular Elastomeric Preformed Gaskets: Extruded or molded closed cell, integral-skinned neoprene of profile and hardness required to maintain watertight seal; complying with ASTM C 509, Type II; black.

C. Available Manufacturers: Subject to compliance with requirements, manufacturers offering products which may be incorporated in the work include, but are not limited to, the following:

1. Manufacturers of Preformed Gaskets:

a. D.S. Brown Co.
b. Maloney Precision Products co.
c. Tremco.

2.12 MISCELLANEOUS GLAZING MATERIALS

A. Compatibility: Provide materials with proven record of compatibility with surfaces contacted in installation.

B. Cleaners, Primers and Sealers: Type recommended by sealant or gasket manufacturer.

C. Setting Blocks: Neoprene, EPDM or silicone blocks as required for compatibility with glazing sealants, 80 to 90 Shore A durometer hardness.

D. Spacers: Neoprene, EPDM or silicone blocks, or continuous extrusions, as required for compatibility with glazing sealant, of size, shape and hardness recommended by glass and sealant manufacturers for application indicated.

E. Edge Blocks: Neoprene, EPDM or silicone blocks as required for compatibility with glazing sealant, of size and hardness required to limit lateral movement (side-walking) of glass.

PART 3 - EXECUTION

3.1 EXAMINATION

A. Examine glass framing, with glazier present, for compliance with the following:

1. Manufacturing and installation tolerances, including those for size, squareness, offsets at corners.
2. Presence and functioning of weep system.
3. Minimum required face or edge clearances.
4. Effective sealing between joints of glass-framing members.

B. Do not proceed with glazing until unsatisfactory conditions have been corrected.

3.2 PREPARATION

A. Clean glazing channels and other framing members receiving glass immediately before glazing. Remove coatings that are not firmly bonded to substrates.

3.3 GLAZING, GENERAL

A. Comply with combined recommendations of manufacturers of glass, sealants, gaskets, and other glazing materials, except where more stringent requirements are indicated, including those in referenced glazing publications.

B. Glazing channel dimensions as indicated on shop drawings provide necessary bite on glass, minimum edge and face clearances, and adequate sealant thicknesses, with reasonable tolerances. Adjust as required by Project conditions during installation.

C. Protect glass from edge damage during handling and installation as follows:

1. Stack individual lites on edge and lean them against sturdy uprights at a slope of 5□to 7□from vertical.
2. Cushion the bottom edges with soft, firm pads free of dirt, grit, glass chips or other foreign material.
3. Avoid rotating or “cartwheeling” insulating glass units over their corners. Instead, use a turning device such as a rolling block if units must be rotated.
4. Schedule glass deliveries to coincide with glazing schedules.
5. Unpack the glass from cases according to printed instructions. Never move partially unpacked cases or “end-pick” lites.
6. Check glass surfaces and edges for damage before glazing. Do not install glass with large edge chips. never slide one lite over another.
7. Prevent contact of the glass with markings - typically flags, festoons or tape to identify openings to be glazed; never mark the glass with an “X” or other identity symbol.
8. Protect the glass with screens of plywood or plastic wherever there is welding, cutting, sandblasting, fireproofing, or other potentially damaging work in progress.
9. Begin glazing in concrete openings only after any surface treatments such as sandblasting, grouting and waterproofing have been completed.
10. Insist that workers handling glass wear gloves, safety shoes, hard hats and glazing gauntlets.

3.4 GASKET GLAZING (DRY)

A. Fabricate compression gaskets in lengths recommended by gasket manufacturer to fit openings exactly, with stretch allowance during installation.

B. Secure compression gaskets in place with joints located at corners to compress gaskets producing a weathertight seal without developing bending stresses in glass. Seal gasket joints with sealant recommended by gasket manufacturer.

C. Install gaskets so they protrude past face of glazing stops.

3.5 PROTECTION AND CLEANING

A. Protect exterior glass from breakage immediately after installation by attaching crossed streamers to framing held away from glass. Do not apply markers to glass surface. Remove nonpermanent labels, and clean surfaces.

B. Protect glass from contact with contaminating substances resulting from construction operations including weld splatter. If, despite such protection, contaminating substances do come into contact with glass, remove them immediately as recommended by glass manufacturer.

C. Examine glass surfaces adjacent to or below exterior concrete and other masonry surfaces at frequent intervals during construction, but not less than once a month, for build-up of dirt, scum, alkali deposits, or stains, and remove as recommended by glass manufacturer.

D. Remove and replace glass that is broken, chipped, cracked, abraded, or damaged in any way, including natural causes, accidents and vandalism, during construction period.

E. Wash glass on both faces in each area of Project prior to date scheduled for inspections that establish date of Substantial Completion. Wash glass as recommended by glass manufacturer.

END OF SECTION 088000

SECTION 088113 - DECORATIVE GLASS GLAZING

PART 1 - GENERAL

1.1 RELATED DOCUMENTS

A. Drawings and general provisions of the Contract, including General and Supplementary Conditions and Division 01 Specification Sections, apply to this Section.

1.2 SUMMARY

A. Section includes the following decorative glass for interior applications:

1. Pressed Glass

B. Related Sections:
1. Section 088000 "Glazing" for standard glass products.

1.3 DEFINITION

A. Glass Thickness: Indicated by thickness designations in millimeters according to ASTM C 1036.

1.4 PERFORMANCE REQUIREMENTS

A. General Performance: Installed glazing systems shall withstand normal thermal movement and impact loads (where applicable) without failure, including loss or glass breakage attributable to the following: defective manufacture, fabrication, or installation; deterioration of glazing materials; or other defects in construction.

B. Delegated Design: Design glass installed adjacent to walking surfaces, including comprehensive engineering analysis by a qualified professional engineer, using performance requirements and design criteria indicated.

1. Differential deflection of adjacent unsupported edges shall not exceed glass thickness when subjected to 50 lbf/ft. (730 N/m) applied horizontally to one panel at any point up to 42 inches (1067 mm) above the adjacent walking surface.
2. Base design on thickness at thinnest part of the glass.

1.5 ACTION SUBMITTALS

A. Product Data: For each decorative-glass and glazing product indicated.

B. Shop Drawings: For decorative glass. Show fabrication and installation details. Include the following:

1. Size and location of penetrations.
2. Glazing method.
3. Mounting method.

C. Glass Samples: For the following products, 12 inches (300 mm) square:

1. Each type of decorative glass.

D. Glazing Accessory Samples: For sealants and colored spacers, in 12-inch (300-mm) lengths. Install sealant Samples between two strips of material representative of the glazed system.

E. Product Schedule: For decorative glass. Use same designations indicated on Drawings.

F. Delegated-Design Submittal: For glass indicated to comply with performance requirements and design criteria, including analysis data signed and sealed by the qualified professional engineer responsible for their preparation.

1.6 INFORMATIONAL SUBMITTALS

A. Warranty: Sample of special warranty.

1.7 CLOSEOUT SUBMITTALS

A. Maintenance Data: For each type of decorative glass to include in maintenance manuals.

1.8 QUALITY ASSURANCE

A. Installer Qualifications: A qualified installer who employs glass installers for this Project who are certified under NGA's Certified Glass Installer Program.

B. Sealant Testing Agency Qualifications: An independent testing agency qualified according to ASTM C 1021 to conduct the testing indicated.

C. Source Limitations for Glass: Obtain each type of decorative glass from single source from single manufacturer.

D. Source Limitations for Glazing Accessories: Obtain from single source from single manufacturer, for each product and installation method.

E. Glazing Publications: Comply with published recommendations in GANA's "Laminated Glazing Reference Manual" and GANA's "Glazing Manual" unless more stringent requirements are indicated. See these publications for glazing terms not otherwise defined in this Section or in referenced standards.

F. Safety Glazing: Where safety glazing is indicated, comply with testing requirements in 16 CFR 1201 for Category II materials.

1. Labeling: Permanently mark glazing with certification label of the SGCC or another certification agency acceptable to authorities having jurisdiction. Label shall indicate manufacturer's name, type of glass, thickness, and safety glazing standard that glass complies with.

1.9 DELIVERY, STORAGE, AND HANDLING

A. Protect decorative glass and glazing materials according to manufacturer's written instructions and as needed to prevent damage to surfaces and edges.

B. Retain packaging and sequencing numbers for decorative-glass units.

1.10 PROJECT CONDITIONS

A. Environmental Limitations: Do not deliver or install decorative glass until spaces are enclosed and weathertight, wet work in spaces is complete and dry, and temporary HVAC system is operating and maintaining ambient temperature and humidity conditions at occupancy levels during the remainder of the construction period.

B. Field Measurements: Verify actual dimensions of openings and construction contiguous with decorative glass by field measurements before fabrication.

1.11 WARRANTY

A. Special Warranty on Laminated Glass: Manufacturer's standard form in which laminated-glass manufacturer agrees to replace laminated-glass units that deteriorate within specified warranty period. Deterioration of laminated glass is defined as defects developed from normal use that are not attributed to glass breakage or to maintaining and cleaning laminated glass contrary to manufacturer's written instructions. Defects include edge separation, delamination materially obstructing vision through glass, and blemishes exceeding those allowed by referenced laminated-glass standard.

1. Warranty Period: Five years from date of Substantial Completion.

PART 2 - PRODUCTS

2.1 GLASS PRODUCTS, GENERAL

A. Thickness: Where glass thickness is indicated, it is a minimum. Provide glass lites in thicknesses as needed to comply with requirements indicated.

B. Strength: Where float glass is indicated, provide annealed float glass, Kind HS heat-treated float glass, or Kind FT heat-treated float glass as needed to comply with requirements indicated. Where heat-strengthened glass is indicated, provide Kind HS heat-treated float glass or Kind FT heat-treated float glass as needed to comply with requirements indicated. Where fully tempered glass is indicated, provide Kind FT heat-treated float glass.

2.2 MONOLITHIC-GLASS PRODUCTS

A. Heat-Treated Float Glass: ASTM C 1048; Type I; Quality-Q3; Class I (clear) unless otherwise indicated; of kind and condition indicated.

1. Fabrication Process: By horizontal (roller-hearth) process with roll-wave distortion parallel to bottom edge of glass as installed unless otherwise indicated.

2.3 DECORATIVE GLASS TYPES

A. Decorative Glass **(Type DGL-1):** Pressed glass

1. Basis-of-Design Product: Subject to compliance with requirements, provide 3-Form Pressed Glass Unit: Two-ply laminate, both plies heat treatment ASTM C 1172, King LD (Laminated with decorative interlayer)
2. Glass Thickness: Overall Thickness Not less than 7/16”
3. Patterns: As selected by Architect from manufacturer's full range.

2.4 GLAZING MATERIALS

A. Glazing Gaskets, Sealants, Tapes, and Miscellaneous Glazing Materials: As specified in Section 088000 "Glazing."

B. Joint Sealants: As specified in Section 079200 "Joint Sealants."

2.5 DECORATIVE-GLASS FABRICATION

A. Fabricate decorative glass and provide other glazing products in sizes required to glaze openings indicated for Project, with edge and face clearances, edge and surface conditions, and bite complying with written recommendations of product manufacturer and with referenced glazing standard.

B. Edge Finishing: Fabricate finished edges to produce smooth, polished edges without chips, scratches, or warps.

1. Finished Edge: Clean cut
2. Edge-Finished Glass Adhesive: Clear, nonyellowing, as recommended by manufacturer.

PART 3 - EXECUTION

3.1 EXAMINATION

A. Examine decorative-glass framing members, with Installer present, for compliance with the following:

1. Manufacturing and installation tolerances, including those for size, squareness, and offsets at corners.
2. Minimum required face or edge clearances.
3. Effective sealing between joints of decorative-glass framing members.

B. Proceed with installation only after unsatisfactory conditions have been corrected.

3.2 PREPARATION

A. Clean glazing channels and other framing members receiving glass immediately before glazing. Remove coatings not firmly bonded to substrates.

B. Examine glazing units to locate orientation of outer surfaces as indicated on Drawings. Label or mark units as needed so that surface orientation is readily identifiable. Do not use materials that leave visible marks in the completed Work.

3.3 INSTALLATION

A. Set decorative-glass units in each series true in line with uniform orientation, pattern, draw, bow, and similar characteristics.

B. Set glass lites with proper orientation so that each outer surface faces the direction indicated on Drawings.

C. Set decorative glass in locations indicated on Drawings. Install glass with hardware and accessories according to hardware manufacturer's written instructions. Attach hardware securely to mounting surfaces.

3.4 GLAZING, GENERAL

A. Decorative Glass: Install glazing as specified in Section 088000 "Glazing."

B. Comply with combined written instructions of manufacturers of gaskets, glass, sealants, tapes, and other glazing materials unless more stringent requirements are indicated, including those in referenced glazing publications.

C. Adjust glazing channel dimensions during installation as required by Project conditions to provide necessary bite on glass, minimum edge and face clearances, and adequate sealant thicknesses, with reasonable tolerances.

D. Protect glass edges from damage during handling and installation. Remove damaged glass from Project site and legally dispose of off Project site. Damaged glass is glass with edge damage or other imperfections that, when installed, could weaken glass and impair performance and appearance.

E. Apply primers to joint surfaces where required for adhesion of sealants, as determined by preconstruction testing.

F. Install setting blocks in sill rabbets, sized and located to comply with referenced glazing publications, unless otherwise required by glass manufacturer. Set blocks in thin course of compatible sealant suitable for heel bead.

G. Do not exceed edge pressures stipulated by glass manufacturers for installing glass lites.

H. Provide spacers for glass lites where length plus width is more than 50 inches (1270 mm).

1. Locate spacers directly opposite each other on both inside and outside faces of glass. Install correct size and spacing to preserve required face clearances, unless gaskets and glazing tapes are used that have demonstrated ability to maintain required face clearances, and to comply with system performance requirements.
2. Provide 1/8-inch (3-mm) minimum bite of spacers on glass and use thickness equal to sealant width. With glazing tape, use thickness slightly less than final compressed thickness of tape.

I. Provide edge blocking where indicated or needed to prevent glass lites from moving sideways in glazing channel, as recommended in writing by glass manufacturer and according to requirements in referenced glazing publications.

3.5 CLEANING AND PROTECTION

A. Protect decorative glass from damage immediately after installation by attaching crossed streamers to framing and held away from glass. Do not apply markers to glass surface. Remove nonpermanent labels, and clean surfaces.

B. Protect glass from contact with contaminating substances resulting from construction operations. If, despite such protection, contaminating substances do come into contact with glass, remove substances immediately as recommended in writing by glass manufacturer.

C. Remove and replace glass that is broken, chipped, cracked, or abraded or that is damaged from natural causes, accidents, and vandalism, during construction period.

D. Wash glass on both exposed surfaces in each area of Project not more than four days before date scheduled for inspections that establish date of Substantial Completion. Wash glass as recommended in writing by glass manufacturer.

END OF SECTION 088113

SECTION 089119 - FIXED LOUVERS

PART 1 - GENERAL

1.1 RELATED DOCUMENTS

A. Drawings and general provisions of the Contract, including General and Supplementary Conditions and Division 01 Specification Sections, apply to this Section.

1.2 SUMMARY

A. Section Includes:

1. Fixed, extruded-aluminum louvers.

B. Related Requirements:

1. Section 074213 "Metal Wall Panels" for louvers integral to the metal wall panel system.

1.3 DEFINITIONS

A. Louver Terminology: Definitions of terms for metal louvers contained in AMCA 501 apply to this Section unless otherwise defined in this Section or in referenced standards.

B. Horizontal Louver: Louver with horizontal blades (i.e., the axes of the blades are horizontal).

C. Vertical Louver: Louver with vertical blades (i.e., the axes of the blades are vertical).

D. Drainable-Blade Louver: Louver with blades having gutters that collect water and drain it to channels in jambs and mullions, which carry it to bottom of unit and away from opening.

E. Wind-Driven-Rain-Resistant Louver: Louver that provides specified wind-driven rain performance, as determined by testing according to AMCA 500-L.

1.4 ACTION SUBMITTALS

A. Product Data: For each type of product.

1. For louvers specified to bear AMCA seal, include printed catalog pages showing specified models with appropriate AMCA Certified Ratings Seals.

B. Shop Drawings: For louvers and accessories. Include plans, elevations, sections, details, and attachments to other work. Show frame profiles and blade profiles, angles, and spacing.

1. Show weep paths, gaskets, flashing, sealant, and other means of preventing water intrusion.
2. Show mullion profiles and locations.

C. Samples: For each type of metal finish required.

D. Delegated-Design Submittal: For louvers indicated to comply with structural performance requirements, including analysis data signed and sealed by the qualified professional engineer responsible for their preparation.

1.5 QUALITY ASSURANCE

A. Welding Qualifications: Qualify procedures and personnel according to the following:

1. AWS D1.2/D1.2M, "Structural Welding Code - Aluminum."

1.6 FIELD CONDITIONS

A. Field Measurements: Verify actual dimensions of openings by field measurements before fabrication.

PART 2 - PRODUCTS

2.1 MANUFACTURERS

A. Source Limitations: Obtain louvers from single source from a single manufacturer where indicated to be of same type, design, or factory-applied color finish.

2.2 PERFORMANCE REQUIREMENTS

A. Structural Performance: Louvers shall withstand the effects of gravity loads and the following loads and stresses within limits and under conditions indicated without permanent deformation of louver components, noise or metal fatigue caused by louver-blade rattle or flutter, or permanent damage to fasteners and anchors. Wind pressures shall be considered to act normal to the face of the building.

1. Wind Loads: Determine loads based on pressures as indicated on Drawings.

B. Louver Performance Ratings: Provide louvers complying with requirements specified, as demonstrated by testing manufacturer's stock units identical to those provided, except for length and width according to AMCA 500-L.

C. Thermal Movements: Allow for thermal movements from ambient and surface temperature changes.

1. Temperature Change (Range): 120 deg F ambient; 180 deg F material surfaces.

D. SMACNA Standard: Comply with recommendations in SMACNA's "Architectural Sheet Metal Manual" for fabrication, construction details, and installation procedures.

2.3 FIXED, EXTRUDED-ALUMINUM LOUVERS

A. Horizontal, Wind-Driven-Rain-Resistant Louver (L-1 & L-2):

1. Manufacturers: Subject to compliance with requirements, provide products by one of the following**:**

a. Greenheck Fan Corporation. – Model: EHH-601

b. Ruskin Company; Tomkins PLC. – Model: EME520DD

2. Louver Depth: 6 inches.
3. Frame and Blade Nominal Thickness: Not less than 0.081 inch.
4. Louver Performance Ratings:

   a. Free Area: Not less than 7.0 sq. ft. (0.65 sq. m) for 48-inch- (1220-mm-) wide by 48-inch- (1220-mm-) high louver.
   b. Air Performance: Not more than 0.10-inch wg (25-Pa) static pressure drop at 700-fpm (3.6-m/s) free-area exhaust velocity.
   c. Wind-Driven Rain Performance: Not less than 99 percent effectiveness when subjected to a rainfall rate of 8 inches (200 mm) per hour and a wind speed of 50 mph (22.4 m/s) at a core-area intake velocity of 676 fpm.

5. AMCA Seal: Mark units with AMCA Certified Ratings Seal.

2.4 OPERABLE, FORMED-METAL LOUVERS

A. Louver Operation: Provide operable louvers with operating mechanisms to suit louver sizes.
   1. Provide mechanical linkage, 24 VDC actuator and control interface for use with specified building automation system. Provide custom size to match width / height of opening within door frame

B. Single-Blade, Operable Louver **(L-3):**

   1. Basis-of-Design Product: Subject to compliance with requirements, provide Greenheck EAD-401 or comparable product by one of the following:

      a. Ruskin Company; Tomkins PLC.

   2. Louver Depth: 4 inches (100 mm).
   3. Blade Type: Drainable.
   4. Frame and Blade Material and Nominal Thickness: 6063-T5 aluminum not less than 0.125 nominal wall thickness.
   5. See Mechanical drawings for performance requirements.
   6. AMCA Seal: Mark units with AMCA Certified Ratings Seal.

2.5 MATERIALS

A. Aluminum Extrusions: ASTM B 221 (ASTM B 221M), Alloy 6063-T5, T-52, or T6.

B. Aluminum Sheet: ASTM B 209 (ASTM B 209M), Alloy 3003 or 5005 with temper as required for forming, or as otherwise recommended by metal producer for required finish.

C. Fasteners: Use types and sizes to suit unit installation conditions.

   1. Use tamper-resistant screws for exposed fasteners unless otherwise indicated.
   2. For fastening aluminum, use aluminum or 300 series stainless-steel fasteners.
   3. For color-finished louvers, use fasteners with heads that match color of louvers.

D. Postinstalled Fasteners for Concrete and Masonry: Torque-controlled expansion anchors, made from stainless-steel components, with capability to sustain, without failure, a load equal to 4 times the loads imposed, for concrete, or 6 times the load imposed for masonry, as determined by testing according to ASTM E 488, conducted by a qualified independent testing agency.

E. Bituminous Paint: Cold-applied asphalt emulsion complying with ASTM D 1187.

2.6 FABRICATION

A. Factory assemble louvers to minimize field splicing and assembly. Disassemble units as necessary for shipping and handling limitations. Clearly mark units for reassembly and coordinated installation.

B. Maintain equal louver blade spacing, including separation between blades and frames at head and sill, to produce uniform appearance.

C. Fabricate frames, including integral sills, to fit in openings of sizes indicated, with allowances made for fabrication and installation tolerances, adjoining material tolerances, and perimeter sealant joints.

D. Include supports, anchorages, and accessories required for complete assembly.

E. Provide subsills made of same material as louvers for recessed louvers.

2.7 ALUMINUM FINISHES

A. Finish louvers after assembly.

B. High-Performance Organic Finish: Three-coat fluoropolymer finish complying with AAMA 2605 and containing not less than 70 percent PVDF resin by weight in both color coat and clear topcoat. Prepare, pretreat, and apply coating to exposed metal surfaces to comply with coating and resin manufacturers' written instructions.

1. Color and Gloss: As selected by Architect from manufacturer's full range of standard and custom colors.

PART 3 - EXECUTION

3.1 EXAMINATION

A. Examine substrates and openings, with Installer present, for compliance with requirements for installation tolerances and other conditions affecting performance of the Work.

B. Proceed with installation only after unsatisfactory conditions have been corrected.

3.2 PREPARATION

A. Coordinate setting drawings, diagrams, templates, instructions, and directions for installation of anchorages that are to be embedded in concrete or masonry construction. Coordinate delivery of such items to Project site.

3.3 INSTALLATION

A. Locate and place louvers level, plumb, and at indicated alignment with adjacent work.

B. Use concealed anchorages where possible. Provide brass or lead washers fitted to screws where required to protect metal surfaces and to make a weathertight connection.

C. Form closely fitted joints with exposed connections accurately located and secured.

D. Provide perimeter reveals and openings of uniform width for sealants and joint fillers, as indicated.

E. Protect unpainted galvanized and nonferrous-metal surfaces that are in contact with concrete, masonry, or dissimilar metals from corrosion and galvanic action by applying a heavy coating of bituminous paint or by separating surfaces with waterproof gaskets or nonmetallic flashing.

F. Install concealed gaskets, flashings, joint fillers, and insulation as louver installation progresses, where weathertight louver joints are required. Comply with Section 079200 "Joint Sealants" for sealants applied during louver installation.

3.4 ADJUSTING AND CLEANING

A. Clean exposed louver surfaces that are not protected by temporary covering, to remove fingerprints and soil during construction period. Do not let soil accumulate during construction period.

B. Before final inspection, clean exposed surfaces with water and a mild soap or detergent not harmful to finishes. Thoroughly rinse surfaces and dry.

C. Restore louvers damaged during installation and construction so no evidence remains of corrective work. If results of restoration are unsuccessful, as determined by Architect, remove damaged units and replace with new units.

1. Touch up minor abrasions in finishes with air-dried coating that matches color and gloss of, and is compatible with, factory-applied finish coating.

END OF SECTION 089119

SECTION 092216 - NON-STRUCTURAL METAL FRAMING

PART 1 - GENERAL

1.1 RELATED DOCUMENTS

A. Drawings and general provisions of the Contract, including General and Supplementary Conditions and Division 01 Specification Sections, apply to this Section.

1.2 SUMMARY

A. Section Includes:

1. Non-load-bearing steel framing systems for interior gypsum board assemblies.
2. Suspension systems for interior gypsum ceilings, soffits, and grid systems.

B. Related Requirements:

1. Section 054000 "Cold-Formed Metal Framing" for exterior and interior load-bearing and exterior non-load-bearing wall studs; floor joists; roof rafters and ceiling joists; and roof trusses.

1.3 ACTION SUBMITTALS

A. Product Data: For each type of product.

PART 2 - PRODUCTS

2.1 PERFORMANCE REQUIREMENTS

A. Fire-Test-Response Characteristics: For fire-resistance-rated assemblies that incorporate non-load-bearing steel framing, provide materials and construction identical to those tested in assembly indicated, according to ASTM E 119 by an independent testing agency.

B. STC-Rated Assemblies: For STC-rated assemblies, provide materials and construction identical to those tested in assembly indicated, according to ASTM E 90 and classified according to ASTM E 413 by an independent testing agency.

2.2 FRAMING SYSTEMS

A. Framing Members, General: Comply with ASTM C 754 for conditions indicated.

1. Steel Sheet Components: Comply with ASTM C 645 requirements for metal unless otherwise indicated.
2. Protective Coating: ASTM A 653/A 653M, G40 (Z120), hot-dip galvanized unless otherwise indicated.

B. Studs and Runners: ASTM C 645.

1. Steel Studs and Runners:

   a. Minimum Base-Metal Thickness: 0.033 inch (0.84 mm).
   b. Depth: 3-5/8 inches, unless otherwise indicated.

C. Slip-Type Head Joints: Where indicated, provide the following:
   1. Double-Runner System: ASTM C 645 top runners, inside runner with 2-inch- (51-mm-) deep flanges in thickness not less than indicated for studs and fastened to studs, and outer runner sized to friction fit inside runner.

D. Firestop Tracks: Top runner manufactured to allow partition heads to expand and contract with movement of the structure while maintaining continuity of fire-resistance-rated assembly indicated; in thickness not less than indicated for studs and in width to accommodate depth of studs.

   1. Products: Subject to compliance with requirements, provide one of the following:

      a. Fire Trak Corp.; Fire Trak System.
      b. Grace Construction Products; FlameSafe FlowTrak System.
      c. Metal-Lite, Inc.; The System.

E. Flat Strap and Backing Plate: Steel sheet for blocking and bracing in length and width indicated.

   1. Minimum Base-Metal Thickness: 0.033 inch (0.84 mm).

F. Hat-Shaped, Rigid Furring Channels: ASTM C 645.

   1. Minimum Base-Metal Thickness: 0.033 inch (0.84 mm).
   2. Depth: 7/8 inch (22.2 mm).

G. Z-Shaped Furring: With slotted or nonslotted web, face flange of 1-1/4 inches (32 mm), wall attachment flange of 7/8 inch (22 mm), minimum uncoated-metal thickness of 0.018 inch (0.45 mm), and depth required to fit insulation thickness indicated.

2.3 SUSPENSION SYSTEMS

A. Tie Wire: ASTM A 641/A 641M, Class 1 zinc coating, soft temper, 0.062-inch- (1.59-mm-) diameter wire, or double strand of 0.048-inch- (1.21-mm-) diameter wire.

B. Wire Hangers: ASTM A 641/A 641M, Class 1 zinc coating, soft temper, 0.16 inch (4.12 mm) in diameter.

C. Grid Suspension System for Gypsum Board Ceilings: ASTM C 645, direct-hung system composed of main beams and cross-furring members that interlock.

   1. Products: Subject to compliance with requirements, provide one of the following:

      a. Armstrong World Industries, Inc.; Drywall Grid Systems.
      b. USG Corporation; Drywall Suspension System.

2.4 AUXILIARY MATERIALS

A. General: Provide auxiliary materials that comply with referenced installation standards.

1. Fasteners for Metal Framing: Of type, material, size, corrosion resistance, holding power, and other properties required to fasten steel members to substrates.

B. Isolation Strip at Exterior Walls: Provide following:

1. Foam Gasket: Adhesive-backed, closed-cell vinyl foam strips that allow fastener penetration without foam displacement, 1/8 inch (3.2 mm) thick, in width to suit steel stud size.

PART 3 - EXECUTION

3.1 EXAMINATION

A. Examine areas and substrates, with Installer present, and including welded hollow-metal frames, cast-in anchors, and structural framing, for compliance with requirements and other conditions affecting performance of the Work.

B. Proceed with installation only after unsatisfactory conditions have been corrected.

3.2 PREPARATION

A. Suspended Assemblies: Coordinate installation of suspension systems with installation of overhead structure to ensure that inserts and other provisions for anchorages to building structure have been installed to receive hangers at spacing required to support the Work and that hangers will develop their full strength.

1. Furnish concrete inserts and other devices indicated to other trades for installation in advance of time needed for coordination and construction.

3.3 INSTALLATION, GENERAL

A. Installation Standard: ASTM C 754.
1. Gypsum Board Assemblies: Also comply with requirements in ASTM C 840 that apply to framing installation.

B. Install supplementary framing, and blocking to support fixtures, equipment services, heavy trim, grab bars, toilet accessories, furnishings, or similar construction.

C. Install bracing at terminations in assemblies.

D. Do not bridge building control and expansion joints with non-load-bearing steel framing members. Frame both sides of joints independently.

3.4 INSTALLING FRAMED ASSEMBLIES

A. Install framing system components according to spacings indicated, but not greater than spacings required by referenced installation standards for assembly types.

1. Single-Layer Application: 16 inches (406 mm) o.c. unless otherwise indicated.
2. Multilayer Application: 16 inches (406 mm) o.c. unless otherwise indicated.

3. Tile Backing Panels: 16 inches (406 mm) o.c. unless otherwise indicated.

B. Where studs are installed directly against exterior masonry walls or dissimilar metals at exterior walls, install isolation strip between studs and exterior wall.

C. Install studs so flanges within framing system point in same direction.

D. Install tracks (runners) at floors and overhead supports. Extend framing full height to structural supports or substrates above suspended ceilings except where partitions are indicated to terminate at suspended ceilings. Continue framing around ducts penetrating partitions above ceiling.

1. Slip-Type Head Joints: Where framing extends to overhead structural supports, install to produce joints at tops of framing systems that prevent axial loading of finished assemblies.
2. Door Openings: Screw vertical studs at jambs to jamb anchor clips on door frames; install runner track section (for cripple studs) at head and secure to jamb studs.

   a. Install two studs at each jamb unless otherwise indicated.
   b. Install cripple studs at head adjacent to each jamb stud, with a minimum 1/2-inch (13-mm) clearance from jamb stud to allow for installation of control joint in finished assembly.
   c. Extend jamb studs through suspended ceilings and attach to underside of overhead structure.

3. Other Framed Openings: Frame openings other than door openings the same as required for door openings unless otherwise indicated. Install framing below sills of openings to match framing required above door heads.
4. Fire-Resistance-Rated Partitions: Install framing to comply with fire-resistance-rated assembly indicated and support closures and to make partitions continuous from floor to underside of solid structure.

   a. Firestop Track: Where indicated, install to maintain continuity of fire-resistance-rated assembly indicated.

5. Sound-Rated Partitions: Install framing to comply with sound-rated assembly indicated.
6. Curved Partitions:

   a. Bend track to uniform curve and locate straight lengths so they are tangent to arcs.
   b. Begin and end each arc with a stud, and space intermediate studs equally along arcs. On straight lengths of no fewer than two studs at ends of arcs, place studs 6 inches (150 mm) o.c.

E. Direct Furring:
1. Attach to concrete or masonry with stub nails, screws designed for masonry attachment, or powder-driven fasteners spaced 24 inches (610 mm) o.c.

F. Z-Furring Members:

1. Erect insulation, specified in Section 072100 "Thermal Insulation," vertically and hold in place with Z-furring members spaced 24 inches (610 mm) o.c.
2. Except at exterior corners, securely attach narrow flanges of furring members to wall with concrete stub nails, screws designed for masonry attachment, or powder-driven fasteners spaced 24 inches (610 mm) o.c.
3. At exterior corners, attach wide flange of furring members to wall with short flange extending beyond corner; on adjacent wall surface, screw-attach short flange of furring channel to web of attached channel. At interior corners, space second member no more than 12 inches (305 mm) from corner and cut insulation to fit.

G. Installation Tolerance: Install each framing member so fastening surfaces vary not more than 1/8 inch (3 mm) from the plane formed by faces of adjacent framing.

3.5 INSTALLING SUSPENSION SYSTEMS

A. Install suspension system components according to spacings indicated, but not greater than spacings required by referenced installation standards for assembly types.

1. Hangers: 48 inches (1219 mm) o.c.

B. Isolate suspension systems from building structure where they abut or are penetrated by building structure to prevent transfer of loading imposed by structural movement.

C. Suspend hangers from building structure as follows:

1. Install hangers plumb and free from contact with insulation or other objects within ceiling plenum that are not part of supporting structural or suspension system.

   a. Splay hangers only where required to miss obstructions and offset resulting horizontal forces by bracing, countersplaying, or other equally effective means.

2. Where width of ducts and other construction within ceiling plenum produces hanger spacings that interfere with locations of hangers required to support standard suspension system members, install supplemental suspension members and hangers in the form of trapezes or equivalent devices.

   a. Size supplemental suspension members and hangers to support ceiling loads within performance limits established by referenced installation standards.

3. Wire Hangers: Secure by looping and wire tying, either directly to structures or to inserts, eye screws, or other devices and fasteners that are secure and appropriate for substrate, and in a manner that will not cause hangers to deteriorate or otherwise fail.
4. Do not attach hangers to steel roof deck.
5. Do not attach hangers to permanent metal forms. Furnish cast-in-place hanger inserts that extend through forms.
6. Do not attach hangers to rolled-in hanger tabs of composite steel floor deck.
7. Do not connect or suspend steel framing from ducts, pipes, or conduit.

D. Fire-Resistance-Rated Assemblies: Wire tie furring channels to supports.

E. Grid Suspension Systems: Attach perimeter wall track or angle where grid suspension systems meet vertical surfaces. Mechanically join main beam and cross-furring members to each other and butt-cut to fit into wall track.

F. Installation Tolerances: Install suspension systems that are level to within 1/8 inch in 12 feet (3 mm in 3.6 m) measured lengthwise on each member that will receive finishes and transversely between parallel members that will receive finishes.

END OF SECTION 092216

SECTION 092900 - GYPSUM BOARD

PART 1 - GENERAL

1.1 RELATED DOCUMENTS

A. Drawings and general provisions of the Contract, including General and Supplementary Conditions and Division 01 Specification Sections, apply to this Section.

1.2 SUMMARY

A. Section Includes:

1. Interior gypsum board.

B. Related Requirements:

1. Section 061600 "Sheathing" for gypsum sheathing for exterior walls.
2. Section 092216 "Non-Structural Metal Framing" for non-structural framing and suspension systems that support gypsum board panels.

1.3 ACTION SUBMITTALS

A. Product Data: For each type of product.

B. Samples: For the following products:

1. Trim Accessories: Full-size Sample in 12-inch- (300-mm-) long length for each trim accessory indicated.

1.4 DELIVERY, STORAGE AND HANDLING

A. Store materials inside under cover and keep them dry and protected against weather, condensation, direct sunlight, construction traffic, and other potential causes of damage. Stack panels flat and supported on risers on a flat platform to prevent sagging.

1.5 FIELD CONDITIONS

A. Environmental Limitations: Comply with ASTM C 840 requirements or gypsum board manufacturer's written recommendations, whichever are more stringent.

B. Do not install paper-faced gypsum panels until installation areas are enclosed and conditioned.

C. Do not install panels that are wet, those that are moisture damaged, and those that are mold damaged.

1. Indications that panels are wet or moisture damaged include, but are not limited to, discoloration, sagging, or irregular shape.

2. Indications that panels are mold damaged include, but are not limited to, fuzzy or splotchy surface contamination and discoloration.

PART 2 - PRODUCTS

2.1 PERFORMANCE REQUIREMENTS

A. Fire-Resistance-Rated Assemblies: For fire-resistance-rated assemblies, provide materials and construction identical to those tested in assembly indicated according to ASTM E 119 by an independent testing agency.

B. STC-Rated Assemblies: For STC-rated assemblies, provide materials and construction identical to those tested in assembly indicated according to ASTM E 90 and classified according to ASTM E 413 by an independent testing agency.

2.2 GYPSUM BOARD, GENERAL

A. Size: Provide maximum lengths and widths available that will minimize joints in each area and that correspond with support system indicated.

2.3 INTERIOR GYPSUM BOARD

A. Manufacturers: Subject to compliance with requirements, provide products by one of the following:
1. CertainTeed Corp.
2. Georgia-Pacific Gypsum LLC.
3. Lafarge North America Inc.
4. National Gypsum Company.
5. USG Corporation.

B. Gypsum Board, Type X: ASTM C 1396/C 1396M.

1. Thickness: 5/8 inch (15.9 mm).
2. Long Edges: Tapered.

C. Abuse-Resistant Gypsum Board: ASTM C 1629/C 1629M, Level 1.

1. Core: 5/8 inch (15.9 mm), Type X.
2. Long Edges: Tapered.
3. Mold Resistance: ASTM D 3273, score of 10 as rated according to ASTM D 3274.

D. Moisture- and Mold-Resistant Gypsum Board: ASTM C 1396/C 1396M. With moisture- and mold-resistant core and paper surfaces.

1. Core: 5/8 inch (15.9 mm), Type X.
2. Long Edges: Tapered.
3. Mold Resistance: ASTM D 3273, score of 10 as rated according to ASTM D 3274.

2.4 SPECIALTY GYPSUM BOARD

A. Gypsum Board, Type C: ASTM C 1396/C 1396M. Manufactured to have increased fire-resistive capability.

1. Products: Subject to compliance with requirements, provide one of the following:

   a. CertainTeed Corp.; ProRoc Type C.
   b. Georgia-Pacific Gypsum LLC; Fireguard C.
   c. Lafarge North America Inc.; Firecheck Type C.
   d. National Gypsum Company; Gold Bond Fire-Shield C.
   e. USG Corporation; Firecode C Core.

2. Thickness: As required by fire-resistance-rated assembly indicated on Drawings.
3. Long Edges: Tapered.

2.5 TRIM ACCESSORIES

A. Interior Trim: ASTM C 1047.

1. Material: Galvanized or aluminum-coated steel sheet, rolled zinc, plastic, or paper-faced galvanized steel sheet.

2. Shapes:

   a. Cornerbead: Use at outside corners, unless otherwise indicated.

      1) Basis of Design: CornerKey by Fry Reglet Corp.

   b. LC-Bead
   c. L-Bead
   d. Expansion (Control) Joint
   e. Curved-Edge Corner bead

B. Aluminum Trim: Extruded accessories of profiles and dimensions indicated.

1. Manufacturers: Subject to compliance with requirements, provide products by one of the following:

   a. Fry Reglet Corp. (Basis of Design).
   b. Gordon, Inc.
   c. MM Systems Corporation.

2. Aluminum: Alloy and temper with not less than the strength and durability properties of ASTM B 221 (ASTM B 221M), alloy 6063-T5.

3. Finish: As scheduled by Architect from manufacturer's full range.

4. Reveals: Equivalent to the following by Fry Reglet:

   DM-1: DRMZ-50-50

   DM-2: DRM-50-50

DM-3: DRM-50-50 2-PC

DM-4: DRMF-50-50

2.6 JOINT TREATMENT MATERIALS

A. General: Comply with ASTM C 475/C 475M.

B. Joint Tape:

1. Interior Gypsum Board: Paper.
2. Tile Backing Panels: As recommended by panel manufacturer.

C. Joint Compound for Interior Gypsum Board: For each coat use formulation that is compatible with other compounds applied on previous or for successive coats.

1. Prefilling: At open joints and damaged surface areas, use setting-type taping compound.
2. Embedding and First Coat: For embedding tape and first coat on joints, fasteners, and trim flanges, use setting-type taping compound.
3. Fill Coat: For second coat, use setting-type, sandable topping compound.
4. Finish Coat: For third coat, use setting-type, sandable topping compound.
5. Skim Coat: For final coat of Level 5 finish, use setting-type, sandable topping compound.

D. Joint Compound for Tile Backing Panels:
1. Cementitious Backer Units: As recommended by backer unit manufacturer.

2.7 AUXILIARY MATERIALS

A. General: Provide auxiliary materials that comply with referenced installation standards and manufacturer's written recommendations.

B. Laminating Adhesive: Adhesive or joint compound recommended for directly adhering gypsum panels to continuous substrate.

C. Steel Drill Screws: ASTM C 1002, unless otherwise indicated.

1. Use screws complying with ASTM C 954 for fastening panels to steel members from 0.033 to 0.112 inch (0.84 to 2.84 mm) thick.
2. For fastening cementitious backer units, use screws of type and size recommended by panel manufacturer.

D. Sound Attenuation Blankets: ASTM C 665, Type I (blankets without membrane facing) produced by combining thermosetting resins with mineral fibers manufactured from glass, slag wool, or rock wool.

1. Fire-Resistance-Rated Assemblies: Comply with mineral-fiber requirements of assembly.

E. Acoustical Joint Sealant: As specified in Section 079200 “Joint Sealants.”

F. Thermal Insulation: As specified in Section 072100 "Thermal Insulation."

G. Vapor Retarder: As specified in Section 072100 "Thermal Insulation."

PART 3 - EXECUTION

3.1 EXAMINATION

A. Examine areas and substrates including welded hollow-metal frames and framing, with Installer present, for compliance with requirements and other conditions affecting performance.

B. Examine panels before installation. Reject panels that are wet, moisture damaged, and mold damaged.

C. Proceed with installation only after unsatisfactory conditions have been corrected.

3.2 APPLYING AND FINISHING PANELS, GENERAL

A. Comply with ASTM C 840.

B. Install ceiling panels across framing to minimize the number of abutting end joints and to avoid abutting end joints in central area of each ceiling. Stagger abutting end joints of adjacent panels not less than one framing member.

C. Install panels with face side out. Butt panels together for a light contact at edges and ends with not more than 1/16 inch (1.5 mm) of open space between panels. Do not force into place.

D. Locate edge and end joints over supports, except in ceiling applications where intermediate supports or gypsum board back-blocking is provided behind end joints. Do not place tapered edges against cut edges or ends. Stagger vertical joints on opposite sides of partitions. Do not make joints other than control joints at corners of framed openings.

E. Form control and expansion joints with space between edges of adjoining gypsum panels.

F. Cover both faces of support framing with gypsum panels in concealed spaces (above ceilings, etc.), except in chases braced internally.

1. Unless concealed application is indicated or required for sound, fire, air, or smoke ratings, coverage may be accomplished with scraps of not less than 8 sq. ft. (0.7 sq. m) in area.
2. Fit gypsum panels around ducts, pipes, and conduits.
3. Where partitions intersect structural members projecting below underside of floor/roof slabs and decks, cut gypsum panels to fit profile formed by structural members; allow 1/4- to 3/8-inch- (6.4- to 9.5-mm-) wide joints to install sealant.

G. Isolate perimeter of gypsum board applied to non-load-bearing partitions at structural abutments, except floors. Provide 1/4- to 1/2-inch- (6.4- to 12.7-mm-) wide spaces at these locations and trim edges with edge trim where edges of panels are exposed. Seal joints between edges and abutting structural surfaces with acoustical sealant.

H. Attachment to Steel Framing: Attach panels so leading edge or end of each panel is attached to open (unsupported) edges of stud flanges first.

I. STC-Rated Assemblies: Seal construction at perimeters, behind control joints, and at openings and penetrations with a continuous bead of acoustical sealant. Install acoustical sealant at both faces of partitions at perimeters and through penetrations. Comply with ASTM C 919 and with manufacturer's written recommendations for locating edge trim and closing off sound-flanking paths around or through assemblies, including sealing partitions above acoustical ceilings.

J. Install sound attenuation blankets before installing gypsum panels unless blankets are readily installed after panels have been installed on one side.

3.3 APPLYING INTERIOR GYPSUM BOARD

A. Install interior gypsum board in the following locations:
   1. Type X: Typical at all horizontal and vertical locations unless otherwise indicated.
   2. Abuse-Resistant Type: As indicated on Drawings.
   3. Moisture- and Mold-Resistant Type: As indicated on Drawings.
   4. Type C: Where required for specific fire-resistance-rated assembly indicated.

B. Single-Layer Application:

   1. On ceilings, apply gypsum panels before wall/partition board application to greatest extent possible and at right angles to framing unless otherwise indicated.
   2. On partitions/walls, apply gypsum panels horizontally (perpendicular to framing) unless otherwise indicated or required by fire-resistance-rated assembly, and minimize end joints.

      a. Stagger abutting end joints not less than one framing member in alternate courses of panels.
      b. At stairwells and other high walls, install panels horizontally unless otherwise indicated or required by fire-resistance-rated assembly.

   3. Fastening Methods: Apply gypsum panels to supports with steel drill screws.

C. Multilayer Application:

   1. On ceilings, apply gypsum board indicated for base layers before applying base layers on walls/partitions; apply face layers in same sequence. Apply base layers at right angles to framing members and offset face-layer joints one framing member, 16 inches (400 mm) minimum, from parallel base-layer joints, unless otherwise indicated or required by fire-resistance-rated assembly.
   2. On partitions/walls, apply gypsum board indicated for base layers and face layers vertically (parallel to framing) with joints of base layers located over stud or furring member and face-layer joints offset at least one stud or furring member with base-layer joints, unless otherwise indicated or required by fire-resistance-rated assembly. Stagger joints on opposite sides of partitions.
   3. Fastening Methods: Fasten base layers and face layers separately to supports with screws.

D. Laminating to Substrate: Where gypsum panels are indicated as directly adhered to a substrate (other than studs, joists, furring members, or base layer of gypsum board), comply with gypsum board manufacturer's written recommendations and temporarily brace or fasten gypsum panels until fastening adhesive has set.

E. Curved Surfaces:

   1. Install panels horizontally (perpendicular to supports) and unbroken, to extent possible, across curved surface plus 12-inch- (300-mm-) long straight sections at ends of curves and tangent to them.
   2. For double-layer construction, fasten base layer to studs with screws 16 inches (400 mm) o.c. Center gypsum board face layer over joints in base layer, and fasten to studs with screws spaced 12 inches (300 mm) o.c.

3.4 INSTALLING TRIM ACCESSORIES

A. General: For trim with back flanges intended for fasteners, attach to framing with same fasteners used for panels. Otherwise, attach trim according to manufacturer's written instructions.

B. Control Joints: As indicated, or if not indicated and required, install control joints according to ASTM C 840 and in specific locations approved by Architect for visual effect.

C. Interior Trim: Install in the following locations:

1. Cornerbead: Use at outside corners unless otherwise indicated.
2. LC-Bead: Use at exposed panel edges.
3. L-Bead: Use where indicated.

D. Aluminum Trim: Install in locations indicated on Drawings.

3.5 FINISHING GYPSUM BOARD

A. General: Treat gypsum board joints, interior angles, edge trim, control joints, penetrations, fastener heads, surface defects, and elsewhere as required to prepare gypsum board surfaces for decoration. Promptly remove residual joint compound from adjacent surfaces.

B. Prefill open joints and damaged surface areas.

C. Apply joint tape over gypsum board joints, except for trim products specifically indicated as not intended to receive tape.

D. Gypsum Board Finish Levels: Finish panels to levels indicated below and according to ASTM C 840:

1. Level 1: Ceiling plenum areas, concealed areas, and where indicated.
2. Level 4: At panel surfaces that will be exposed to view unless otherwise indicated.

    a. Primer and its application to surfaces are specified in Section 099123 "Interior Painting."

3. Level 5: At abuse resistant gypsum board

    a. Primer and its application to surfaces are specified in Section 099123 "Interior Painting."

3.6 PROTECTION

A. Protect adjacent surfaces from drywall compound and promptly remove from floors and other non-drywall surfaces. Repair surfaces stained, marred, or otherwise damaged during drywall application.

B. Protect installed products from damage from weather, condensation, direct sunlight, construction, and other causes during remainder of the construction period.

C. Remove and replace panels that are wet, moisture damaged, and mold damaged.

1. Indications that panels are wet or moisture damaged include, but are not limited to, discoloration, sagging, or irregular shape.
2. Indications that panels are mold damaged include, but are not limited to, fuzzy or splotchy surface contamination and discoloration.

END OF SECTION 092900

SECTION 093000 – TILING

PART 1 - GENERAL

1.1 RELATED DOCUMENTS

A. Drawings and general provisions of Contract, including General and Supplementary Conditions and Division 1 Specification Sections, apply to this Section.

1.2 SUMMARY

A. This Section includes the following:

1. Glazed Ceramic Tile in select Toilet Rooms.

1.3 SUBMITTALS

A. General: Submit the following in accordance with Conditions of Contract and Division 1 Specification Sections.

B. Product data for each type of product specified.

C. Samples for initial selection purposes in form of manufacturer's color charts consisting of actual tiles or sections of tile showing full range of colors (minimum of 90), textures, and patterns (minimum of 50) available for each type and composition of tile indicated. Include samples of grout and accessories involving color selection. Quarry tile work will require dark custom color grout.

D. Samples for verification purposes of each item listed below, prepared on samples of size and construction indicated, products involve color and texture variations, in sets showing full range of variations expected.

1. Full-size units of each type of trim and accessory for each color required.
2. Slate thresholds in 6-inch lengths.

E. Master grade certificates for each shipment, type, and composition of tile, signed by tile manufacturer and Installer.

F. Qualification data for firms and persons specified in "Quality Assurance" article to demonstrate their capabilities and experience. Include list of completed projects with project names, addresses, names of Architects and Owners, plus other information specified.

1.4 QUALITY ASSURANCE

A. Single-Source Responsibility for Tile: Obtain each color, grade, finish, type, composition, and variety of tile from a single source with resources to provide products of consistent quality in appearance and physical properties without delaying progress of the Work.

B. Single-Source Responsibility for Setting and Grouting Materials: Obtain ingredients of a uniform quality from one manufacturer for each cementitious and admixture component and from one source or producer for each aggregate.

C. Installer Qualifications: Engage an experienced Installer who has successfully completed tile installations similar in material, design, and extent to that indicated for Project.

1.5 DELIVERY, STORAGE, AND HANDLING

A. Deliver and store packaged materials in original containers with seals unbroken and labels intact until time of use. Comply with requirement of ANSI A137.1 for labeling sealed tile packages.

B. Prevent damage or contamination to materials by water, freezing, foreign matter, and other causes.

C. Handle tile with temporary protective coating on exposed surfaces to prevent coated surfaces from contacting backs or edges of other units. If despite these precautions coating does contact bonding surfaces of tile, remove coating from bonding surfaces before setting tile.

1.6 PROJECT CONDITIONS

A. Maintain environmental conditions and protect work during and after installation to comply with referenced standards and manufacturer's printed recommendations.

B. Vent temporary heaters to exterior to prevent damage to tile work from carbon dioxide buildup.

C. Maintain temperatures at 50 deg F (10 deg C) or more in tiled areas during installation and for 7 days after completion, unless higher temperatures are required by referenced installation standard or manufacturer's instructions.

PART 2 - PRODUCTS

2.1 PRODUCTS, GENERAL

A. ANSI Standard for Ceramic Tile: Comply with ANSI A137.1 "American National Standard Specifications for Ceramic Tile" for types, compositions, and grades of tile indicated.

1. Furnish tile complying with "Standard Grade" requirements unless otherwise indicated.

B. ANSI Standard for Tile Installation Materials: Comply with ANSI standard referenced with products and materials indicated for setting and grouting.

C. Colors, Textures, and Patterns: Where manufacturer's standard products are indicated for tile, grout, and other products requiring selection of colors, surface textures, patterns, and other appearance characteristics, provide specific products or materials complying with the following requirements:

1. Provide selections made by Architect from manufacturer's full range of standard colors, textures, and patterns for products of type indicated.
2. Provide tile trim and accessories that match color and finish of adjoining flat tile.

D. Mounting: Where factory-mounted tile is required, provide back- or edge-mounted tile assemblies as standard with manufacturer unless another mounting method is indicated.

1. Where tile is indicated for installation in wet areas, do not use back- or edge-mounted tile assemblies unless tile manufacturer specifies that this type of mounting is suitable for these kinds of uses and has been successfully used on other projects.

2.2 TILE PRODUCTS

A. Basis-of-Design Product: Subject to compliance with requirements, provide products by Dal-Tile Corp or comparable product by one of the following:

1. American Olean Tile Co., Inc.

2. Buchtal Corp, USA
3. Interceramic

B. Glazed Interior Wall Tile: Provide flat tile complying with the following requirements:

1. Nominal Facial Dimensions: 4 ¼” x 4 ¼”
2. Nominal Thickness: 5/16”
3. Face: Plain with square edge, modified square edge, or cushion edge as selected by Architect, semi-gloss glazed finish, straight joint pattern.
4. Mounting: Factory back-mounted.
5. Colors: Refer to color schedule on drawings

2.3 SETTING MATERIALS

A. Thin-Set Portland Cement Mortar: Where thin-set portland cement mortar applications are indicated, use the following unless otherwise required.

1. Dry-set portland cement mortar, ANSI A118.1, factory sanded.

B. Latex-Portland Cement Mortar: ANSI A118.4, composition as follows:

1. Prepackaged dry mortar mix composed of portland cement, graded aggregate, and the following dry polymer additive in the form of a re-emulsifiable powder to which only water is added at job site.

a. Dry Polymer Additive: Manufacturer's standard.

2. Latex additive (water emulsion) of type described below, serving as replacement for part or all of gauging water, combined at job site with prepackaged dry mortar mix supplied or specified by latex additive manufacturer.

a. Latex Type: Manufacturer's standard.

2.4 GROUTING MATERIALS

A. Commercial Portland Cement Grout: ANSI A118.6, color as indicated.

B. Dry-Set Grout: ANSI A118.6, color as indicated.

2.5 ELASTOMERIC SEALANTS

A. General: Provide manufacturer's standard chemically curing, elastomeric sealants of base polymer indicated that comply with requirements of Division 7 Section "Joint Sealers," including ASTM C 920 as referenced by Type, Grade, Class, and Uses.

B. Colors: Provide colors of exposed sealants to match colors of grout in tile adjoining sealed joints unless otherwise indicated.

C. Multipart Pourable Urethane Sealant for Use T: Type M; Grade P; Class 25; Use T.

2.6 MIXING MORTARS AND GROUT

A. Mix mortars and grouts to comply with requirements of referenced standards and manufacturers including those for accurate proportioning of materials, water, or additive content; type of mixing equipment, selection of mixer speeds, mixing containers, mixing time, and other procedures needed to produce mortars and grouts of

uniform quality with optimum performance characteristics for application indicated.

PART 3 - EXECUTION

3.1 EXAMINATION

A. Examine substrates and areas where tile will be installed, with Installer present, for compliance with requirements for installation tolerances and other conditions affecting performance of installed tile.

1. Verify that substrates for setting tile are firm, dry, clean, and free from oil or waxy films and curing compounds.

B. Do not proceed with installation until unsatisfactory conditions have been corrected.

3.2 INSTALLATION, GENERAL

A. ANSI Tile Installation Standard: Comply with parts of ANSI 108 series of tile installation standards included under "American National Standard Specifications for the Installation of Ceramic Tile" that apply to type of setting and grouting materials and methods indicated.

B. TCA Installation Guidelines: TCA "Handbook for Ceramic Tile Installation"; comply with TCA installation methods indicated, or if not otherwise indicated, as applicable to installation conditions shown.

C. Extend tile work into recesses and under or behind equipment and fixtures to form a complete covering without interruptions except as otherwise shown. Terminate work neatly at obstructions, edges, and corners without disrupting pattern or joint alignments.

D. Accurately form intersections and returns. Perform cutting and drilling of tile without marring visible surfaces. Carefully grind cut edges of tile abutting trim, finish, or built-in items for straight aligned joints. Fit tile closely to electrical outlets, piping, fixtures, and other penetrations so that plates, collars, or covers overlap tile.

E. Jointing Pattern: Unless otherwise shown, lay tile in grid pattern. Align joints when adjoining tiles on floor, base, walls, and trim are same size. Lay out tile work and center tile fields in both directions in each space or on each wall area. Adjust to minimize tile cutting. Provide uniform joint widths unless otherwise shown.

1. For tile mounted in sheets, make joints between tile sheets same width as joints within tile sheets so that extent of each sheet is not apparent in finished work.

F. Expansion Joints: Locate expansion joints and other sealant-filled joints, including control, contraction, and isolation joints, where indicated during installation of setting materials, mortar beds, and tile. Do not saw cut joints after installation of tiles.

1. Prepare joints and apply sealants to comply with requirements of Division 7 Section "Joint Sealants."

G. Grout tile to comply with referenced installation standards, using grout materials indicated.

1. Mix and install proprietary components to comply with grout manufacturer's directions.

3.3 WALL TILE AND INSTALLATION METHODS

A. Install types of tile designated for wall application to comply with requirements indicated below for setting bed methods, TCA installation methods related to subsurface wall conditions, and grout types:

B. Thin-Set Portland Cement Mortar: ANSI A108.5.

1. Masonry, Interior: TCA W202 (with leveling grout).
2. Wood or Metal Studs, Interior: TCA W243.
3. Grout: Dry-set.
4. Color as selected by Architect from manufacturer’s standard.

3.4 CLEANING AND PROTECTION

A. Cleaning: Upon completion of placement and grouting, clean all ceramic tile surfaces so they are free of foreign matter.

1. Unglazed tile may be cleaned with acid solutions only when permitted by tile and grout manufacturer's printed instructions, but no sooner than 14 days after installation. Protect metal surfaces, cast iron, and vitreous plumbing fixtures from effects of acid cleaning. Flush surface with clean water before and after cleaning.

B. Finished Tile Work: Leave finished installation clean and free of cracked, chipped, broken, unbonded, and otherwise defective tile work.

C. Provide final protection and maintain conditions in a manner acceptable to manufacturer and installer that ensures that tile is without damage or deterioration at time of Substantial Completion.

1. When recommended by tile manufacturer, apply a protective coat of neutral protective cleaner to completed tile walls and floors. Protect installed tile work with kraft paper or other heavy covering during construction period to prevent staining, damage, and wear.
2. Prohibit foot and wheel traffic from tiled floors for at least 7 days after grouting is completed.

D. Before final inspection, remove protective coverings and rinse neutral cleaner from tile surfaces.

END OF SECTION 093000

SECTION 095113 - ACOUSTICAL PANEL CEILINGS

PART 1 - GENERAL

1.1 RELATED DOCUMENTS

A. Drawings and general provisions of the Contract, including General and Supplementary Conditions and Division 01 Specification Sections, apply to this Section.

1.2 SUMMARY

A. Section includes acoustical panels and exposed suspension systems for ceilings.

B. Products furnished, but not installed under this Section, include anchors, clips, and other ceiling attachment devices to be cast in concrete.

1.3 ACTION SUBMITTALS

A. Product Data: For each type of product.

B. Samples for Verification: For each component indicated and for each exposed finish required, prepared on Samples of size indicated below.

1. Acoustical Panel: Set of 6-inch- square Samples of each type, color, pattern, and texture.
2. Exposed Suspension-System Members, Moldings, and Trim: Set of 6-inch- (150-mm-) long Samples of each type, finish, and color.

1.4 INFORMATIONAL SUBMITTALS

A. Coordination Drawings: Reflected ceiling plans, drawn to scale, on which the following items are shown and coordinated with each other, using input from installers of the items involved:

1. Suspended ceiling components.
2. Structural members to which suspension systems will be attached.
3. Size and location of initial access modules for acoustical panels.
4. Items penetrating finished ceiling including the following:

    a. Lighting fixtures.
    b. Air outlets and inlets.
    c. Speakers.
    d. Sprinklers.
    e. Access panels.

5. Perimeter moldings.

1.5 CLOSEOUT SUBMITTALS

A. Maintenance Data: For finishes to include in maintenance manuals.

1.6 MAINTENANCE MATERIAL SUBMITTALS

A. Furnish extra materials that match products installed and that are packaged with protective covering for storage and identified with labels describing contents.

1. Acoustical Ceiling Panels: Full-size panels equal to 2 percent of quantity installed.
2. Suspension-System Components: Quantity of each exposed component equal to 2 percent of quantity installed.

1.7 DELIVERY, STORAGE, AND HANDLING

A. Deliver acoustical panels, suspension-system components, and accessories to Project site in original, unopened packages and store them in a fully enclosed, conditioned space where they will be protected against damage from moisture, humidity, temperature extremes, direct sunlight, surface contamination, and other causes.

B. Before installing acoustical panels, permit them to reach room temperature and a stabilized moisture content.

C. Handle acoustical panels carefully to avoid chipping edges or damaging units in any way.

1.8 FIELD CONDITIONS

A. Environmental Limitations: Do not install acoustical panel ceilings until spaces are enclosed and weatherproof, wet work in spaces is complete and dry, work above ceilings is complete, and ambient temperature and humidity conditions are maintained at the levels indicated for Project when occupied for its intended use.

1. Pressurized Plenums: Operate ventilation system for not less than 48 hours before beginning acoustical panel ceiling installation.

PART 2 - PRODUCTS

2.1 PERFORMANCE REQUIREMENTS

A. Surface-Burning Characteristics: Comply with ASTM E 84; testing by a qualified testing agency. Identify products with appropriate markings of applicable testing agency.

1. Flame-Spread Index: Comply with ASTM E 1264 for Class A materials.
2. Smoke-Developed Index: 50 or less.

B. Fire-Resistance Ratings: Comply with ASTM E 119; testing by a qualified testing agency. Identify products with appropriate markings of applicable testing agency.

1. Indicate design designations from UL's "Fire Resistance Directory" or from the listings of another qualified testing agency.

2.2 ACOUSTICAL PANELS, GENERAL

A. Source Limitations: Obtain each type of acoustical ceiling panel its applicable supporting suspension system from single source from single manufacturer.

B. Glass-Fiber-Based Panels: Made with binder containing no urea formaldehyde.

C. Acoustical Panel Standard: Provide manufacturer's standard panels of configuration indicated that comply with ASTM E 1264 classifications as designated by types, patterns, acoustical ratings, and light reflectances unless otherwise indicated.

1. Mounting Method for Measuring NRC: Type E-400; plenum mounting in which face of test specimen is 15-3/4 inches (400 mm) away from test surface according to ASTM E 795.

D. Acoustical Panel Colors and Patterns: Match appearance characteristics indicated for each product type.

1. Where appearance characteristics of acoustical panels are indicated by referencing pattern designations in ASTM E 1264 and not manufacturers' proprietary product designations, provide products selected by Architect from each manufacturer's full range that comply with requirements indicated for type, pattern, color, light reflectance, acoustical performance, edge detail, and size.

2.3 ACOUSTICAL PANELS

A. Basis-of-Design Product: Subject to compliance with requirements, provide product indicated on Drawings or comparable product by one of the following:

1. Armstrong World Industries, Inc.
2. CertainTeed Corp.
3. USG Interiors, Inc.; Subsidiary of USG Corporation.

B. Products:

1. Acoustical Panel - Type **(ACT-1)**

a. Type, Form and Finish: ASTM E1264, Type IV, Form 2, Pattern E.
b. Size: 24”x24”x 3/4”
c. CAC 35, NRC 70.
d. Edge Detail: 9/16” Beveled Tegular
f. Basis of Design: Armstrong Ultima – 1912

2. Acoustical Panel - Type **(ACT-2)**

a. Type, Form and Finish: ASTM E1264, Type IV, Form 2, Pattern E.
b. Size: 24”x 48”x 3/4”
c. CAC 35, NRC .70.
d. Edge Detail: 9/16” Beveled Tegular
e. Basis of Design: Armstrong Ultima - 1915

3. Acoustical Panel - Type **(ACT-3)**

    a. Type, Form and Finish: ASTM E1264, Type IV, Form 2, Pattern E.
    b. Size: 24”x 24” x 5/8”.
    c. CAC 40, NRC N/A.
    d. Edge Detail: Square Lay-in.
    e. Basis of Design: Armstrong Clean Room VL No. 868.

4. Acoustical Panel - Type **(ACT-4)**

    a. Type, Form and Finish: ASTM E1264, Type IV, Form 2, Pattern E.
    b. Size: 24”x 48” x 5/8”.
    c. CAC 40, NRC N/A.
    d. Edge Detail: Square Lay-in.
    e. Basis of Design: Armstrong Clean Room VL No. 870.

5. Acoustical Panel - Type **(ACT-5)**

    a. Type, Form and Finish: ASTM E1264, Type XII, Form 2, Pattern E.
    b. Size: 24”x 96”x 1”
    c. CAC N/A, NRC .95.
    d. Edge Detail: 9/16” Square Tegular.
    e. Basis of Design: Armstrong Optima Plank No. 3262

6. Specialty Ceiling – Type **(AC-1)**

    a. Type, Form and Finish: ASTM E1264, Type XII, Form 2, Pattern E.
    b. Size: 48” x 48” x 7/8”
    c. Basis of Design: Armstrong Soundscapes: Panel Square 5440__:
        1. Color as selected by Architect from manufacturer’s full range

7. Specialty Ceiling – Type **(AWC-1)**

    a. Type, Form and Finish: Composite
    b. Size: 6” x 96” x ¾” with ¾” reval
    c. CAC N/A, NRC .40
    d. Basis of Design: Armstrong Woodworks Linear 666W1__
        1. Provide 6” Woodwork Trim with wood substrate
        2. Species / Finish as selected by Architect from manufacturer’s full range

8. Specialty Ceiling – Type **(MC-1)**

    a. Type, Form and Finish: Custom
    b. Sizes: See Drawings_
    c. Basis of Design: Armstrong Metalworks RH215 Flat
        1. Provide 50 mm side walls at all 4 edges
        2. Color: As selected by Architect from manufacturer’s standard and custom RAL range.
        3. Perforations: As selected by Architect from manufacturer’s standard, premium, and custom ranges.
        4. Provide ½” Acoustical Infill Panels above ceiling panels – Armstrong – 6093

9. Specialty Wall / Ceiling System – Type **(WG-1)**

   a. Type, Form and Finish: Custom
   b. Size: 2 ¼" 8 Blades with backer
   c. CAC N/A, NRC .90
   d. Basis of Design: Armstrong Woodworks Grille – 5666-BO-___
      1. Species / Finish as selected by Architect from manufacturer's full range
      2. Attached system as recommended by manufacturer

2.4 METAL SUSPENSION SYSTEMS, EDGE MOLDING & TRIM, GENERAL

A. Metal Suspension-System Standard: Provide manufacturer's standard direct-hung metal suspension systems of types, structural classifications, and finishes indicated that comply with applicable requirements in ASTM C 635/C 635M.

   1. High-Humidity Finish: Comply with ASTM C 635/C 635M requirements for "Coating Classification for Severe Environment Performance" where high-humidity finishes are indicated.

B. Attachment Devices: Size for five times the design load indicated in ASTM C 635/C 635M, Table 1, "Direct Hung," unless otherwise indicated. Comply with seismic design requirements.

C. Wire Hangers, Braces, and Ties: Provide wires complying with the following requirements:

   1. Zinc-Coated, Carbon-Steel Wire: ASTM A 641/A 641M, Class 1 zinc coating, soft temper.
   2. Stainless-Steel Wire: ASTM A 580/A 580M, Type 304, nonmagnetic.
   3. Size: Select wire diameter so its stress at three times hanger design load (ASTM C 635/C 635M, Table 1, "Direct Hung") will be less than yield stress of wire, but provide not less than 0.106-inch-diameter wire.

D. Hanger Rods: Mild steel, zinc coated or protected with rust-inhibitive paint.

E. Angle Hangers: Angles with legs not less than 7/8 inch (22 mm) wide; formed with 0.04-inch- (1-mm-) thick, galvanized-steel sheet complying with ASTM A 653/A 653M, G90 (Z275) coating designation; with bolted connections and 5/16-inch- (8-mm-) diameter bolts.

F. Hold-Down Clips: Where indicated, provide manufacturer's standard hold-down clips spaced 24 inches (610 mm) o.c. on all cross tees.

G. Impact Clips: Where indicated, provide manufacturer's standard impact-clip system designed to absorb impact forces against acoustical panels.

2.5 METAL SUSPENSION SYSTEM

A. Basis-of-Design Product: Subject to compliance with requirements, provide product listed or comparable product by one of the following:

   1. Armstrong World Industries, Inc.
   2. CertainTeed Corp.
   3. USG Interiors, Inc.; Subsidiary of USG Corporation.

B. Products

1. Direct-Hung Suspension Systems, Non-Fire-Resistance Rated:

   a. At Acoustical Panel Types **(ACT-1 & ACT-2):**

      1) Basis for Design: Armstrong Suprafine XL
      2) Type: Narrow face, capped double web, Hot-dipped galvanized grid, ASTM C 636.
      3) Suspension System Accessories: Attachment devices and hangers, ASTM C 636.
      4) Color: White.

b. At Acoustical Panel Types **(ACT-3 & ACT-4):**

1) Basis for Design: Armstrong Prelude XL
2) Type: Wide-face, capped double-web steel, hot-dipped galvanized grid, ASTM C 636.
3) Suspension System Accessories: Attachment devices and hangers, ASTM C 636.
4) Color: White.

c. At Acoustical Panel Type **(ACT-5):**

1) Basis for Design: Armstrong 9/16" Interlude XL.
2) Type: Dimensional Tee System, double-web hot galavanized steel, ASTM C 635.
3) Suspension System Accessories: Attachment devices and hangers, ASTM C 635;
   a. Provide Stabilizer Clips, spacing per manuf. Recommendation, No. 435
   b. Provide Spring border clips, No. 7870
4) Color: White.
5) Perimeter Trim at ACT-5 in Media Center A115 – North Edge
   a. Basis for Design: Armstrong's Axiom Classic Trim.
   b. Height: 4".
   c. Color: As selected by Architect from manufacturer's full line.

d. At Specialty Ceiling Type **(AC-1):**

1) Basis for Design: Armstrong Soundscapes – Group Suspension System
2) Applicable Components:
   a. Grouping Frames Kits – 5451
   b. Frame Splice Kits – 5452
   c. Frame Alignment Kits - 5453
   d. Deck Hanging Kits – 5450
   e. Panel Hook Kits – 5453
3) Color: Black

e. At Specialty Ceiling Type **(AWC-1):**

1) Basis for Design: Armstrong HD Linear Carriers - 5371
2) Applicable Components:
   a. Linear Wood Splice - 5843
3) Color: Black

f. At Specialty Ceiling Type **(MC-1):**

1) Basis for Design: Armstrong Metalworks RH215 Flat System –"H" Profile System
2) Color: As selected by Architect from manufacturer's standard and custom RAL range.

2.6 ACOUSTICAL SEALANT

A. Acoustical Sealant: Manufacturer's standard sealant complying with ASTM C 834 and effective in reducing airborne sound transmission through perimeter joints and openings in building construction as demonstrated by testing representative assemblies according to ASTM E 90.

1. Exposed and Concealed Joints: Nonsag, paintable, nonstaining latex sealant.
2. Concealed Joints: Nondrying, nonhardening, nonskinning, nonstaining, gunnable, synthetic-rubber sealant.
3. Acoustical sealant shall have a VOC content of 250 g/L or less when calculated according to 40 CFR 59, Subpart D (EPA Method 24).

PART 3 - EXECUTION

3.1 EXAMINATION

A. Examine substrates, areas, and conditions, including structural framing to which acoustical panel ceilings attach or abut, with Installer present, for compliance with requirements specified in this and other Sections that affect ceiling installation and anchorage and with requirements for installation tolerances and other conditions affecting performance of acoustical panel ceilings.

B. Examine acoustical panels before installation. Reject acoustical panels that are wet, moisture damaged, or mold damaged.

C. Proceed with installation only after unsatisfactory conditions have been corrected.

3.2 PREPARATION

A. Measure each ceiling area and establish layout of acoustical panels to balance border widths at opposite edges of each ceiling. Avoid using less-than-half-width panels at borders, and comply with layout shown on reflected ceiling plans.

3.3 INSTALLATION

A. General: Install acoustical panel ceilings to comply with ASTM C 636/C 636M and seismic design requirements indicated, according to manufacturer's written instructions and CISCA's "Ceiling Systems Handbook."

1. Fire-Rated Assembly: Install fire-rated ceiling systems according to tested fire-rated design.

B. Suspend ceiling hangers from building's structural members and as follows:

1. Install hangers plumb and free from contact with insulation or other objects within ceiling plenum that are not part of supporting structure or of ceiling suspension system.
2. Splay hangers only where required and, if permitted with fire-resistance-rated ceilings, to miss obstructions; offset resulting horizontal forces by bracing, countersplaying, or other equally effective means.
3. Where width of ducts and other construction within ceiling plenum produces hanger spacings that interfere with location of hangers at spacings required to support standard suspension-system members, install supplemental suspension members and hangers in form of trapezes or equivalent devices.
4. Secure wire hangers to ceiling-suspension members and to supports above with a minimum of three tight turns. Connect hangers directly either to structures or to inserts, eye screws, or other devices that are secure and appropriate for substrate and that will not deteriorate or otherwise fail due to age, corrosion, or elevated temperatures.
5. Secure flat, angle, channel, and rod hangers to structure, including intermediate framing members, by attaching to inserts, eye screws, or other devices that are secure and appropriate for both the structure to which hangers are attached and the type of hanger involved. Install hangers in a manner that will not cause them to deteriorate or fail due to age, corrosion, or elevated temperatures.
6. Do not support ceilings directly from permanent metal forms or floor deck. Fasten hangers to cast-in-place hanger inserts, postinstalled mechanical or adhesive anchors, or power-actuated fasteners that extend through forms into concrete.

7. When steel framing does not permit installation of hanger wires at spacing required, install carrying channels or other supplemental support for attachment of hanger wires.
8. Do not attach hangers to steel deck tabs.
9. Do not attach hangers to steel roof deck. Attach hangers to structural members.
10. Space hangers not more than 48 inches (1200 mm) o.c. along each member supported directly from hangers unless otherwise indicated; provide hangers not more than 8 inches (200 mm) from ends of each member.
11. Size supplemental suspension members and hangers to support ceiling loads within performance limits established by referenced standards and publications.

C. Secure bracing wires to ceiling suspension members and to supports with a minimum of four tight turns. Suspend bracing from building's structural members as required for hangers, without attaching to permanent metal forms, steel deck, or steel deck tabs. Fasten bracing wires into concrete with cast-in-place or postinstalled anchors.

D. Install edge moldings and trim of type indicated at perimeter of acoustical ceiling area and where necessary to conceal edges of acoustical panels.

1. Apply acoustical sealant in a continuous ribbon concealed on back of vertical legs of moldings before they are installed.
2. Screw attach moldings to substrate at intervals not more than 16 inches (400 mm) o.c. and not more than 3 inches (75 mm) from ends, leveling with ceiling suspension system to a tolerance of 1/8 inch in 12 feet (3.2 mm in 3.6 m). Miter corners accurately and connect securely.
3. Do not use exposed fasteners, including pop rivets, on moldings and trim.

E. Install suspension-system runners so they are square and securely interlocked with one another. Remove and replace dented, bent, or kinked members.

F. Install acoustical panels with undamaged edges and fit accurately into suspension-system runners and edge moldings. Scribe and cut panels at borders and penetrations to provide a neat, precise fit.

1. Arrange directionally patterned acoustical panels as follows:

   a. As indicated on reflected ceiling plans.

2. For square-edged panels, install panels with edges fully hidden from view by flanges of suspension-system runners and moldings.
3. For reveal-edged panels on suspension-system runners, install panels with bottom of reveal in firm contact with top surface of runner flanges.
4. For reveal-edged panels on suspension-system members with box-shaped flanges, install panels with reveal surfaces in firm contact with suspension-system surfaces and panel faces flush with bottom face of runners.
5. Paint cut edges of panel remaining exposed after installation; match color of exposed panel surfaces using coating recommended in writing for this purpose by acoustical panel manufacturer.
6. Protect lighting fixtures and air ducts to comply with requirements indicated for fire-resistance-rated assembly.

3.4 CLEANING

A. Clean exposed surfaces of acoustical panel ceilings, including trim, edge moldings, and suspension-system members. Comply with manufacturer's written instructions for cleaning and touchup of minor finish damage. Remove and replace ceiling components that cannot be successfully cleaned and repaired to permanently eliminate evidence of damage.

END OF SECTION 095113

SECTION 096513 - RESILIENT BASE AND ACCESSORIES

PART 1 - GENERAL

1.1 RELATED DOCUMENTS

A. Drawings and general provisions of the Contract, including General and Supplementary Conditions and Division 01 Specification Sections, apply to this Section.

1.2 SUMMARY

A. Section Includes:

1. Rubber wall base.
2. Resilient stair accessories.
3. Resilient molding accessories.

1.3 ACTION SUBMITTALS

A. Product Data: For each type of product.

B. Samples for Initial Selection: For each type of product indicated.

C. Samples for Verification: For each type of product indicated and for each color, texture, and pattern required in manufacturer's standard-size Samples, but not less than 12 inches (300 mm) long.

D. Product Schedule: For resilient base and accessory products. Use same designations indicated on Drawings.

1.4 MAINTENANCE MATERIAL SUBMITTALS

A. Furnish extra materials that match products installed and that are packaged with protective covering for storage and identified with labels describing contents.

1. Furnish not less than 10 linear feet (3 linear m) for every 500 linear feet (150 linear m) or fraction thereof, of each type, color, pattern, and size of resilient product installed.

1.5 DELIVERY, STORAGE, AND HANDLING

A. Store resilient products and installation materials in dry spaces protected from the weather, with ambient temperatures maintained within range recommended by manufacturer, but not less than 50 deg F (10 deg C) or more than 90 deg F (32 deg C).

1.6 FIELD CONDITIONS

A. Maintain ambient temperatures within range recommended by manufacturer, but not less than 70 deg F or more than 95 deg F in spaces to receive resilient products during the following time periods:

1. 48 hours before installation.
2. During installation.
3. 48 hours after installation.

B. After installation and until Substantial Completion, maintain ambient temperatures within range recommended by manufacturer, but not less than 55 deg F or more than 95 deg F.

C. Install resilient products after other finishing operations, including painting, have been completed.

PART 2 - PRODUCTS

2.1 RUBBER WALL BASE (RB)

A. Manufacturers: Subject to compliance with requirements, provide products by one of the following:

1. Armstrong World Industries, Inc.
2. Johnsonite; A Tarkett Company.
3. Mondo Rubber International, Inc.
4. Roppe Corporation, USA.

B. Product Standard: ASTM F 1861, Type TP (rubber, thermoplastic).

1. Group: I (solid, homogeneous).
2. Style and Location:
   a. Style B, Cove: Refer to Finish Schedule for locations.

C. Thickness: 0.125 inch.

D. Height: 4 inches.

E. Lengths: Coils in manufacturer's standard length

F. Outside Corners: Preformed.

G. Inside Corners: Preformed.

H. Colors: As selected by Architect from full range of industry colors.

2.2 RUBBER STAIR ACCESSORIES (RUB)

A. Fire-Test-Response Characteristics: As determined by testing identical products according to ASTM E 648 or NFPA 253 by a qualified testing agency.

1. Critical Radiant Flux Classification: Class I, not less than 0.45 W/sq. cm.

B. Manufacturers: Subject to compliance with requirements, provide products by one of the following:
1. Armstrong World Industries, Inc.
2. Johnsonite; A Tarkett Company.
3. Mondo Rubber International, Inc.
4. Roppe Corporation, USA.

C. Stair Treads: ASTM F 2169.

1. Type: TS (rubber, vulcanized thermoset).
2. Class: 1 (smooth, flat).
3. Group: 2 (with contrasting color for the visually impaired).
4. Nosing Style: Square, adjustable to cover angles between 60 and 90 degrees.
5. Nosing Height: 2 inches (51 mm).
6. Thickness: 1/4 inch (6 mm) and tapered to back edge.
7. Size: Lengths and depths to fit each stair tread in one piece or, for treads exceeding maximum lengths manufactured, in equal-length units.

D. Separate Risers: Smooth, flat; in height that fully covers substrate; produced by same manufacturer as treads and recommended by manufacturer for installation with treads.

1. Style: Coved toe, 7 inches (178 mm) high by length matching treads.
2. Thickness: 0.125 inch (3.2 mm).

E. Landing Tile: Matching treads; produced by same manufacturer as treads and recommended by manufacturer for installation with treads.

F. Locations: Provide rubber stair accessories in areas indicated on drawings.

G. Colors and Patterns: As selected by Architect from full range of industry colors.

2.3 RUBBER MOLDING ACCESSORY (T)

A. Manufacturers: Subject to compliance with requirements, provide products by one of the following:

1. Roppe Corporation, USA.

B. Description: Rubber reducer strip for resilient flooring, joiner for tile and carpet, and transition strips.

C. Profile and Dimensions: As appropriate for adjacent floor coverings

D. Locations: At all dissimilar floor material transitions.

E. Colors and Patterns: As selected by Architect from full range of industry colors.

2.4 INSTALLATION MATERIALS

A. Trowelable Leveling and Patching Compounds: Latex-modified, portland cement based or blended hydraulic-cement-based formulation provided or approved by resilient-product manufacturer for applications indicated.

B. Adhesives: Water-resistant type recommended by resilient-product manufacturer for resilient products and substrate conditions indicated.

C. Stair-Tread Nose Filler: Two-part epoxy compound recommended by resilient stair-tread manufacturer to fill nosing substrates that do not conform to tread contours.

D. Metal Edge Strips: Extruded aluminum with mill finish of width shown, of height required to protect exposed edges of flooring, and in maximum available lengths to minimize running joints.

E. Floor Polish: Provide protective, liquid floor-polish products recommended by resilient stair-tread manufacturer.

PART 3 - EXECUTION

3.1 EXAMINATION

A. Examine substrates, with Installer present, for compliance with requirements for maximum moisture content and other conditions affecting performance of the Work.

1. Verify that finishes of substrates comply with tolerances and other requirements specified in other Sections and that substrates are free of cracks, ridges, depressions, scale, and foreign deposits that might interfere with adhesion of resilient products.

B. Proceed with installation only after unsatisfactory conditions have been corrected.

1. Installation of resilient products indicates acceptance of surfaces and conditions.

3.2 PREPARATION

A. Prepare substrates according to manufacturer's written instructions to ensure adhesion of resilient products.

B. Concrete Substrates for Resilient Stair Accessories: Prepare horizontal surfaces according to ASTM F 710.

1. Verify that substrates are dry and free of curing compounds, sealers, and hardeners.
2. Remove substrate coatings and other substances that are incompatible with adhesives and that contain soap, wax, oil, or silicone, using mechanical methods recommended by manufacturer. Do not use solvents.
3. Alkalinity and Adhesion Testing: Perform tests recommended by manufacturer. Proceed with installation only after substrate alkalinity falls within range on pH scale recommended by manufacturer in writing, but not less than 5 or more than 9 pH.
4. Moisture Testing: Proceed with installation only after substrates pass testing according to manufacturer's written recommendations, but not less stringent than the following:

   a. Perform anhydrous calcium chloride test according to ASTM F 1869. Proceed with installation only after substrates have maximum moisture-vapor-emission rate of 3 lb of water/1000 sq. ft. (1.36 kg of water/92.9 sq. m) in 24 hours.
   b. Perform relative humidity test using in situ probes according to ASTM F 2170. Proceed with installation only after substrates have maximum 75 percent relative humidity level.

C. Fill cracks, holes, and depressions in substrates with trowelable leveling and patching compound; remove bumps and ridges to produce a uniform and smooth substrate.

D. Do not install resilient products until they are the same temperature as the space where they are to be installed.

1. At least 48 hours in advance of installation, move resilient products and installation materials into spaces where they will be installed.

E. Immediately before installation, sweep and vacuum clean substrates to be covered by resilient products.

3.3 RESILIENT BASE INSTALLATION

A. Comply with manufacturer's written instructions for installing resilient base.

B. Apply resilient base to walls, columns, pilasters, casework and cabinets in toe spaces, and other permanent fixtures in rooms and areas where base is required.

C. Install resilient base in lengths as long as practical without gaps at seams and with tops of adjacent pieces aligned.

D. Tightly adhere resilient base to substrate throughout length of each piece, with base in continuous contact with horizontal and vertical substrates.

E. Do not stretch resilient base during installation.

F. On masonry surfaces or other similar irregular substrates, fill voids along top edge of resilient base with manufacturer's recommended adhesive filler material.

G. Preformed Corners: Install preformed corners before installing straight pieces.

3.4 RESILIENT ACCESSORY INSTALLATION

A. Comply with manufacturer's written instructions for installing resilient accessories.

B. Resilient Stair Accessories:

1. Use stair-tread-nose filler to fill nosing substrates that do not conform to tread contours.
2. Tightly adhere to substrates throughout length of each piece.
3. For treads installed as separate, equal-length units, install to produce a flush joint between units.

C. Resilient Molding Accessories: Butt to adjacent materials and tightly adhere to substrates throughout length of each piece. Install reducer strips at edges of floor covering that would otherwise be exposed.

3.5 CLEANING AND PROTECTION

A. Comply with manufacturer's written instructions for cleaning and protecting resilient products.

B. Perform the following operations immediately after completing resilient-product installation:

1. Remove adhesive and other blemishes from exposed surfaces.
2. Sweep and vacuum horizontal surfaces thoroughly.
3. Damp-mop horizontal surfaces to remove marks and soil.

C. Protect resilient products from mars, marks, indentations, and other damage from construction operations and placement of equipment and fixtures during remainder of construction period.

D. Floor Polish: Remove soil, visible adhesive, and surface blemishes from resilient stair treads before applying liquid floor polish.

1. Apply one coat(s).

E. Cover resilient products subject to wear and foot traffic until Substantial Completion.

END OF SECTION 096513

SECTION 096516 - RESILIENT SHEET FLOORING

PART 1 - GENERAL

1.1 RELATED DOCUMENTS

A. Drawings and general provisions of the Contract, including General and Supplementary Conditions and Division 1 Specification Sections, apply to this Section.

1.2 SUMMARY

A. This Section includes the following:

1. Vinyl sheet flooring with rolled cove base.

Extent of resilient sheet flooring and accessories is shown on drawings, in schedules and specifications.

B. Related Section: 079200 "Joint Sealants."

1.3 SUBMITTALS

A. General: Submit the following in accordance with Conditions of Contract and Division 1 Specification Sections.

B. Product data for each type of product specified.

C. Samples for initial selection purposes in form of manufacturer's color charts consisting of actual flooring showing full range of colors and patterns available for each type of resilient flooring indicated. Colors and patterns must be equivalent to those indicated on the color schedule.

D. Samples for verification purposes in minimum 12” x 12” piece of each different color and pattern of resilient floor specified, showing full range of variations expected in these characteristics.

E. Maintenance data for resilient sheet flooring, to include in Operating and Maintenance Manual specified in Division 1.

F. Shop Drawings showing floor pattern cuts, pieces and joints.

1.4 QUALITY ASSURANCE

A. Single-Source Responsibility for Floor Tile: Obtain each type, color, and pattern of flooring from a single source with resources to provide products of consistent quality in appearance and physical properties without delaying progress of the Work.

B. Fire Performance Characteristics: Provide resilient sheet flooring with the following fire performance characteristics as determined by testing products per ASTM test method indicated below by UL or another testing and inspecting agency acceptable to authorities having jurisdiction.

1. Critical Radiant Flux: 0.45 watts per sq. cm or more per ASTM E 648.
2. Smoke Density: Less than 450 per ASTM E 662.

1.5 DELIVERY, STORAGE, AND HANDLING

A. Deliver sheet flooring and installation accessories to Project site in original manufacturer's unopened cartons and containers each bearing names of product and manufacturer, Project identification, and shipping and handling instructions.

B. Store flooring materials in dry spaces protected from the weather with ambient temperatures maintained between 50 deg F (10 deg C) and 90 deg F (32 deg C).

C. Store flooring on flat surfaces. Move flooring and installation accessories into spaces where they will be installed at least 48 hours in advance of installation.

D. The entire quantity of like sheet flooring, including those required under 1.8 of this section, must be supplied with one delivery and from one “dye lot.”

1.6 PROJECT CONDITIONS

A. Maintain a minimum temperature of 70 deg F (21 deg C) in spaces to receive sheet flooring for at least 48 hours prior to installation, during installation, and for not less than 48 hours after installation. After this period, maintain a temperature of not less than 55 deg F (13 deg C).

B. Do not install flooring until it is at the same temperature as the space where it is to be installed.

C. Close spaces to traffic during tile installation.

1.7 SEQUENCING AND SCHEDULING

A. Install sheet flooring and accessories after other finishing operations, including painting, have been completed.

B. Do not install flooring over concrete slabs until the slabs have cured and are sufficiently dry to bond with adhesive as determined by tile manufacturer's recommended bond and moisture test.

1.8 EXTRA MATERIALS

A. Deliver extra materials to Owner. Furnish extra materials matching products installed as described below, packaged with protective covering for storage and identified with labels clearly describing contents. Coordinate turn-in to School Maintenance Facility.

1. Furnish quantity of full-width units equal to 5.0% of each class, wearing surface, color, pattern and size of resilient flooring installed.
2. All extra materials must be from same “dye lot” as installed sheet flooring.

PART 2 - PRODUCTS

2.1 MANUFACTURERS

A. Available Products: Subject to compliance with requirements, resilient sheet flooring that may be incorporated in the Work include, and are limited to, the following without prior approval by Architect:

1. Vinyl Sheet Flooring:

a. Mannington (Basis of Design)
b. Armstrong World Industries, Inc.
c. Tarkett, Inc.
d. Azrock
e. Mohawk Congolium.

2.2 ACCEPTABLE PRODUCTS: Equivalent to the following specified as a basis-of-design.

A. VSF: Sheet Vinyl: Biospec MD by Mannington.

1. Sheet: 6 feet wide by 82 ft. maximum length.
2. Overall thickness: .080 in.
3. Wearlayer thickness: .080 in.
4. Static Load Limit: ASTM F 970 (modified) 750 psi.
5. Average weight: 6.5 lbs / sq yd

2.2 INSTALLATION ACCESSORIES

A. Concrete Slab Primer: Nonstaining type as recommended by flooring manufacturer.

B. Trowelable Underlayments and Patching Compounds: Latex-modified, Portland-cement-based formulation provided or approved by sheet flooring manufacturer for applications indicated.

C. Adhesives (Cements): Water-resistant type recommended by sheet flooring manufacturer to suit resilient sheet flooring products and substrate conditions indicated. Adhesive to be low VOC type as approved and recommended by manufacturer.

PART 3 - EXECUTION

3.1 EXAMINATION

A. General: Examine areas where installation of flooring will occur, with Installer present, to verify that substrates and conditions are satisfactory for flooring installation and comply with flooring manufacturer's requirements and those specified in this Section.

B. Concrete Subfloors: Verify that concrete slabs comply with ASTM F 710 and the following:

1. Slab substrates are dry and free of curing compounds, sealers, hardeners, and other materials whose presence would interfere with bonding of adhesive. Determine adhesion and dryness characteristics by performing bond and moisture tests recommended by flooring manufacturer.
2. Finishes of subfloors comply with tolerances and other requirements specified in Division 3 Section "Cast-In-Place Concrete" for slabs receiving resilient flooring.
3. Subfloors are free of cracks, ridges, depressions, scale, and foreign deposits of any kind.

C. Do not proceed with installation until unsatisfactory conditions have been corrected.

3.2 PREPARATION

A. General: Comply with manufacturer's installation specifications to prepare substrates indicated to receive sheet flooring.

B. Use trowelable leveling and patching compounds per flooring manufacturer's directions to fill cracks, holes, and depressions in substrates.

C. Remove coatings, including curing compounds, and other substances that are incompatible with flooring adhesives and that contain soap, wax, oil, or silicone, by using a terrazzo or concrete grinder, a drum sander, or a polishing machine equipped with a heavy-duty wire brush. Skim coat all existing substrates with Ardex Feather Finish or equivalent, following manufacturer’s instructions for installation.

D. Broom or vacuum clean substrates to be covered by sheet flooring immediately before flooring installation. Following cleaning, examine substrates for moisture, alkaline salts, carbonation, or dust.

E. Apply concrete slab primer, if recommended by flooring manufacturer, prior to applying adhesive. Apply according to manufacturer's directions.

3.3 INSTALLATION

A. General: Comply with sheet flooring manufacturer's installation directions and other requirements indicated that are applicable to each type of sheet flooring installation included in Project.

B. Lay out flooring with minimal seaming. Install flooring square with room axis, unless otherwise indicated.

C. Heat-weld all seams.

D. Match sheet flooring for color and pattern by selecting from packaging in same sequence as manufactured and packaged, if so numbered. Cut flooring neatly around all fixtures.

E. Extend sheet flooring up all vertical surfaces, including casework, to form rolled cove base.

F. Extend flooring into toe spaces, door reveals, closets, and similar openings.

G. Maintain reference markers, holes, or openings that are in place or plainly marked for future cutting by repeating on finish flooring as marked on subfloor. Use chalk or other nonpermanent marking device.

H. Install sheet flooring on covers for telephone and electrical ducts, and similar items occurring within finished floor areas as applicable. Maintain overall continuity of color and pattern with pieces of flooring installed on these covers. Tightly adhere edges to perimeter of floor around covers and to covers.

I. Adhere sheet flooring to flooring substrates without producing open cracks, voids, raising and puckering at joints, telegraphing of adhesive spreader marks, or other surface imperfections in completed sheet flooring installation.

J. Use full spread of adhesive applied to substrate in compliance with flooring manufacturer's directions including those for trowel notching, adhesive mixing, and adhesive open and working times.

K. Hand roll flooring where required by flooring manufacturer.

3.4 CLEANING AND PROTECTION

A. Perform the following operations immediately after completing tile installation:

1. Remove visible adhesive and other surface blemishes using cleaner recommended by sheet flooring manufacturers.
2. Sweep or vacuum floor thoroughly.
3. Damp-mop flooring to remove black marks and soil.
4. Apply protective floor polish to tile surfaces that are free from soil, visible adhesive, and surface blemishes.
   a. Use commercially available, metal, cross-linked acrylic product acceptable to tile manufacturer.
   b. Coordinate selection of floor polish with Owner's maintenance service.
   c. Apply minimum one coat sealer and three coats polish.

B. Protect flooring against mars, marks, indentations, and other damage from construction operations and placement of equipment and fixtures during remainder of construction period. Use protection methods indicated or recommended by sheet flooring manufacturer.

END OF SECTION 096516

SECTION 096519 - RESILIENT TILE FLOORING

PART 1 - GENERAL

1.1 RELATED DOCUMENTS

A. Drawings and general provisions of the Contract, including General and Supplementary Conditions and Division 1 Specification Sections, apply to this Section.

1.2 SUMMARY

A. This Section includes the following:

1. Vinyl composition floor tile.
2. Rubber tile flooring.
3. Resilient Quartz Tile

B. Resilient wall base, reducer strips, and other accessories installed with resilient floor tiles are specified in Division 9 Section "Resilient Wall Base and Accessories."

C. Extent of resilient flooring and accessories is shown on drawings, in schedules and specifications.

1. Resilient flooring is required under base cabinets and other built-in furniture which rest on floor, unless otherwise specifically noted.
2. Resilient flooring will not be required under carpet for new floor areas.
3. Apply resilient base to toe recess and base of casework and millwork cabinet work extending to floor, unless otherwise indicated.

D. Related Section: 079200 "Joint Sealants."

1.3 SUBMITTALS

A. General: Submit the following in accordance with Conditions of Contract and Division 1 Specification Sections.

B. Product data for each type of product specified.

C. Samples for initial selection purposes in form of manufacturer's color charts consisting of actual tiles or sections of tiles showing full range of colors and patterns available for each type of resilient floor tile indicated. Colors and patterns must be equivalent to those indicated on the color schedule.

D. Samples for verification purposes in full-size tiles of each different color and pattern of resilient floor tile specified, showing full range of variations expected in these characteristics.

E. Maintenance data for resilient floor tile, to include in Operating and Maintenance Manual specified in Division 1.

F. Shop Drawings showing floor pattern cuts, pieces and joints.

1.4 QUALITY ASSURANCE

A. Single-Source Responsibility for Floor Tile: Obtain each type, color, and pattern of tile from a single source with resources to provide products of consistent quality in appearance and physical properties without delaying progress of the Work.

B. Fire Performance Characteristics: Provide resilient floor tile with the following fire performance characteristics as determined by testing products per ASTM test method indicated below by UL or another testing and inspecting agency acceptable to authorities having jurisdiction.

1. Critical Radiant Flux: 0.45 watts per sq. cm or more per ASTM E 648.
2. Smoke Density: Less than 450 per ASTM E 662.

1.5 DELIVERY, STORAGE, AND HANDLING

A. Deliver tiles and installation accessories to Project site in original manufacturer's unopened cartons and containers each bearing names of product and manufacturer, Project identification, and shipping and handling instructions.

B. Store flooring materials in dry spaces protected from the weather with ambient temperatures maintained between 50 deg F (10 deg C) and 90 deg F (32 deg C).

C. Store tiles on flat surfaces. Move tiles and installation accessories into spaces where they will be installed at least 48 hours in advance of installation.

D. The entire quantity of like tiles, including those required under 1.8 of this section, must be supplied with one delivery and from one “dye lot.”

1.6 PROJECT CONDITIONS

A. Maintain a minimum temperature of 70 deg F (21 deg C) in spaces to receive tiles for at least 48 hours prior to installation, during installation, and for not less than 48 hours after installation. After this period, maintain a temperature of not less than 55 deg F (13 deg C).

B. Do not install tiles until they are at the same temperature as the space where they are to be installed.

C. Close spaces to traffic during tile installation.

1.7 SEQUENCING AND SCHEDULING

A. Install tiles and accessories after other finishing operations, including painting, have been completed.

B. Do not install tiles over concrete slabs until the slabs have cured and are sufficiently dry to bond with adhesive as determined by tile manufacturer's recommended bond and moisture test.

1.8 EXTRA MATERIALS

A. Deliver extra materials to Owner. Furnish extra materials matching products installed as described below, packaged with protective covering for storage and identified with labels clearly describing contents. Coordinate turn-in to School Maintenance Facility.

1. Furnish not less than three boxes for each 50 boxes or fraction thereof, of each class, wearing surface, color, pattern and size of resilient floor tile installed.
2. All extra materials must be from same “dye lot” as installed tile.

PART 2 - PRODUCTS

2.1 MANUFACTURERS

A. Available Products: Subject to compliance with requirements, resilient floor tiles that may be incorporated in the Work include, and are limited to, the following without prior approval by Architect:

1. Vinyl Composition Tile:

   a. Armstrong World Industries, Inc. (Basis of Design).
   b. Tarkett, Inc.
   c. Mannington
   d. Azrock
   e. Mohawk Congolium “Alternatives” and “Choices.”

2. Rubber Tile Flooring and Rubber Stair Treads and Risers:

   a. Johnsonite (Basis of Design).
   b. Endura
   c. Estrie
   d. Roppe Corporation
   e. Johnsonite

3. Resilient QuartzTile:
   b. Upofloor Oy (Basis of Design).

2.2 RESILIENT TILE

A. Vinyl Composition Floor Tile: Products complying with ASTM F 1066-95a, Class 2 (nonasbestos formulated), and with requirements specified in FS SS-T-312, Type IV; 12″x12″ unless otherwise indicated and as follows:

1. Thickness: 1/8″
2. Colors and Patterns: As indicated on drawings and color schedule, or if not otherwise indicated, as selected by Architect from manufacturer's full range of equivalent colors and patterns.

B. Rubber Tile: Products complying with ASTM F 1344, Class I-A, homogenous rubber tile.

1. Thickness: 1/8".
2. Wearing Surface: Square.
3. Size: 12" x 12".
4. Hardness: Durometer hardness not less than 85 Shore Type A per ASTM D 2240 as required according to ASTM F 1344.
5. Colors and Patterns: As selected by Architect from manufacturer's full range of colors and patterns.

C. Resilient Quartz Tile: Provide flat tile complying with the following:

1. Type: Polyester resin marble chip flooring equivalent to Hovi Mosaic Classic, manufactured by Upofloor.
2. Facial Dimensions: 24” x 24”.
3. Thickness: 3/16”.
4. Face: Plain square edged.
5. Colors and Patterns: As indicated on drawings and color schedule, or if not otherwise indicated, as selected by Architect from manufacturer’s full range of equivalent colors and patterns.

2.3 INSTALLATION ACCESSORIES

A. Concrete Slab Primer: Nonstaining type as recommended by flooring manufacturer.

B. Trowelable Underlayments and Patching Compounds: Latex-modified, Portland-cement-based formulation provided or approved by tile manufacturer for applications indicated.

C. Adhesives (Cements): Water-resistant type recommended by tile manufacturer to suit resilient floor tile products and substrate conditions indicated. Adhesive to be low VOC type as approved and recommended by manufacturer.

PART 3 - EXECUTION

3.1 EXAMINATION

A. General: Examine areas where installation of tiles will occur, with Installer present, to verify that substrates and conditions are satisfactory for tile installation and comply with tile manufacturer's requirements and those specified in this Section.

B. Concrete Subfloors: Verify that concrete slabs comply with ASTM F 710 and the following:

1. Slab substrates are dry and free of curing compounds, sealers, hardeners, and other materials whose presence would interfere with bonding of adhesive. Determine adhesion and dryness characteristics by performing bond and moisture tests recommended by tile manufacturer.
2. Finishes of subfloors comply with tolerances and other requirements specified in Division 3 Section "Cast-In-Place Concrete" for slabs receiving resilient flooring.
3. Subfloors are free of cracks, ridges, depressions, scale, and foreign deposits of any kind.

C. Do not proceed with installation until unsatisfactory conditions have been corrected.

3.2 PREPARATION

A. General: Comply with manufacturer's installation specifications to prepare substrates indicated to receive tile.

B. Use trowelable leveling and patching compounds per tile manufacturer's directions to fill cracks, holes, and depressions in substrates.

C. Remove coatings, including curing compounds, and other substances that are incompatible with flooring adhesives and that contain soap, wax, oil, or silicone, by using a terrazzo or concrete grinder, a drum sander, or a polishing machine equipped with a heavy-duty wire brush. Skim coat all existing substrates with Ardex Feather Finish or equivalent, following manufacturer’s instructions for installation.

D. Broom or vacuum clean substrates to be covered by tiles immediately before tile installation. Following cleaning, examine substrates for moisture, alkaline salts, carbonation, or dust.

E. Apply concrete slab primer, if recommended by flooring manufacturer, prior to applying adhesive. Apply according to manufacturer's directions.

3.3 INSTALLATION

A. General: Comply with tile manufacturer's installation directions and other requirements indicated that are applicable to each type of tile installation included in Project.

B. Lay out tiles from center marks established with principal walls, discounting minor offsets, so tiles at opposite edges of room are of equal width. Adjust as necessary to avoid using cut widths at perimeter that equal less than

one-half of a tile. Install tiles square with room axis, unless otherwise indicated. Coordinate layout with patterns as indicated.

C. Match tiles for color and pattern by selecting tiles from cartons in same sequence as manufactured and packaged, if so numbered. Cut tiles neatly around all fixtures. Discard broken, cracked, chipped, or deformed tiles.

1. Lay tiles with grain running in alternating directions, checkerboard pattern.

D. Scribe, cut, and fit tiles to butt tightly to vertical surfaces, permanent fixtures, built-in furniture including cabinets, pipes, outlets, edgings, thresholds, and nosings.

E. Extend tiles into toe spaces, door reveals, closets, and similar openings.

F. Maintain reference markers, holes, or openings that are in place or plainly marked for future cutting by repeating on finish flooring as marked on subfloor. Use chalk or other nonpermanent marking device.

G. Install tiles on covers for telephone and electrical ducts, and similar items occurring within finished floor areas as applicable. Maintain overall continuity of color and pattern with pieces of flooring installed on these covers. Tightly adhere edges to perimeter of floor around covers and to covers.

H. Adhere tiles to flooring substrates without producing open cracks, voids, raising and puckering at joints, telegraphing of adhesive spreader marks, or other surface imperfections in completed tile installation.

I. Use full spread of adhesive applied to substrate in compliance with tile manufacturer's directions including those for trowel notching, adhesive mixing, and adhesive open and working times.

J. Hand roll tiles where required by tile manufacturer.

K. Install rubber tile flooring in accordance with manufacturer’s instructions.

L. Use computer controlled lazer cuts for cuts required to achieve designated patterns. Minimize the number of small tile pieces, especially at corners. Equivalent to Hydro-Lazer (412) 826-3900.

3.4 CLEANING AND PROTECTION

A. Perform the following operations immediately after completing tile installation:

1. Remove visible adhesive and other surface blemishes using cleaner recommended by tile manufacturers.
2. Sweep or vacuum floor thoroughly.
3. Damp-mop tile to remove black marks and soil. Additional cleaning and waxing is NIC.

B. Protect flooring against mars, marks, indentations, and other damage from construction operations and placement of equipment and fixtures during remainder of construction period. Use protection methods indicated or recommended by tile manufacturer.

END OF SECTION 096519

SECTION 096566 - RESILIENT ATHLETIC FLOORING

PART 1 - GENERAL

1.1 RELATED DOCUMENTS

A. Drawings and general provisions of the Contract, including General and Supplementary Conditions and Division 01 Specification Sections, apply to this Section.

1.2 SUMMARY

A. Section Includes:
   1. Resilient Athletic Flooring

B. Related Sections:
   1. Section 096513 "Resilient Base and Accessories" for wall base and accessories installed with flooring.

1.3 ACTION SUBMITTALS

A. Product Data: For each type of product indicated.

B. Shop Drawings: Show installation details and locations of the following:
   1. Layout, colors, widths, and dimensions of game lines and markers.
   2. Locations of floor inserts for athletic equipment installed through flooring.
   3. Seam locations for sheet flooring.

C. Samples for Initial Selection: For each type of flooring indicated.

   1. Game-Line and Marker Paint: Include charts showing available colors and glosses.

D. Samples for Verification: For each type, color, and pattern of flooring indicated, 6-inch- (150-mm-) square Samples of same thickness and material indicated for the Work.

   1. Game-Line- and Marker-Paint Samples: Include Sample sets showing game-line- and marker-paint colors applied to flooring.
   2. Seam Samples: For each vinyl sheet flooring color and pattern required; with seam running lengthwise and in center of 6-by-9-inch (150-by-230-mm) Sample applied to a rigid backing and prepared by Installer for this Project.

1.4 CLOSEOUT SUBMITTALS

A. Maintenance Data: For flooring to include in maintenance manuals.

1.5 MAINTENANCE MATERIAL SUBMITTALS

A. Furnish extra materials, before installation begins, that match products installed and that are packaged with protective covering for storage and identified with labels describing contents.

1. Sheet Flooring: Furnish full-width rolls of not less than 10 linear feet (3 linear m) for each 500 linear feet (150 linear m) or fraction thereof, of each type, color, and pattern of flooring installed.

1.6 QUALITY ASSURANCE

A. Sheet Vinyl Flooring Installer Qualifications: An experienced Installer who has completed sheet vinyl flooring installations using seaming methods indicated for this Project and similar in material, design, and extent to that indicated for this Project; who is acceptable to manufacturer; and whose work has resulted in installations with a record of successful in-service performance.

1.7 DELIVERY, STORAGE, AND HANDLING

A. Deliver materials in original packages and containers, with seals unbroken, bearing manufacturer's labels indicating brand name and directions for storing.

B. Store materials to prevent deterioration. Store rolls upright.

1.8 FIELD CONDITIONS

A. Adhesively Applied Products:

1. Maintain temperatures during installation within range recommended in writing by manufacturer, but not less than 70 deg F (21 deg C) or more than 95 deg F (35 deg C), in spaces to receive flooring 48 hours before installation, during installation, and 48 hours after installation unless longer period is recommended in writing by manufacturer.
2. After postinstallation period, maintain temperatures within range recommended in writing by manufacturer, but not less than 55 deg F (13 deg C) or more than 95 deg F (35 deg C).
3. Close spaces to traffic during flooring installation.
4. Close spaces to traffic for 48 hours after flooring installation unless manufacturer recommends longer period in writing.

B. Install flooring after other finishing operations, including painting, have been completed.

1.9 COORDINATION

A. Coordinate layout and installation of flooring with floor inserts for gymnasium equipment.

PART 2 - PRODUCTS

2.1 PERFORMANCE REQUIREMENTS

A. FloorScore Compliance: Resilient athletic flooring shall comply with requirements of FloorScore Standard.

B. Low-Emitting Materials: Flooring system shall comply with the testing and product requirements of the California Department of Health Services' "Standard Practice for the Testing of Volatile Organic Emissions from Various Sources Using Small-Scale Environmental Chambers."

2.2 RESILIENT ATHLETIC FLOORING **(RAF)**

A. Basis-of-Design Product: Subject to compliance with requirements, provide Gerflor Taraflex Multi-Use 5.0 or comparable product by one of the following:

1. Amarco Products.
2. Johnsonite; a Tarkett company.
3. Lonseal, Inc.
4. Robbins Sports Surfaces.
5. Sport Court; Subsidiary of Connor Sport Court International.

B. Description: Sheet vinyl flooring specifically designed for adhered athletic flooring applications with ASTM F2772 Class 2 properties.

C. Sheet Vinyl Flooring with Backing: ASTM F 1303.
1. Overall Thickness: 0.20 inch.
2. Wear Layer Thickness: 0.08 inch
3. Backing: Very high density, closed cell foam with reinforced fiberglass grid
4. Adhesive Method – Full spread adhesive to adhere flooring to substrate to meet manufacturer's installation requirements.

D. Seaming Method: Heat welded.

E. Traffic-Surface Texture: Textured

F. Applied Finish: Factory-applied UV urethane.

G. Roll Size: Not less than 59 inches wide by longest length that is practical to minimize splicing during installation.

H. Color and Pattern: Equivalent to Gerflor #6381 Maple design.

2.3 ACCESSORIES

A. Trowelable Leveling and Patching Compound: Latex-modified, hydraulic-cement-based formulation approved by flooring manufacturer.

B. Adhesives: Water-resistant type recommended in writing by manufacturer for substrate and conditions indicated.

C. Game-Line and Marker Paint: Complete system including primer, if any, compatible with flooring and recommended in writing by flooring and paint manufacturers for use indicated.

PART 3 - EXECUTION

3.1 EXAMINATION

A. Examine substrates, with Installer present, for compliance with requirements for installation tolerances, moisture content, and other conditions affecting performance of the Work.

1. Verify that finishes of substrates comply with tolerances and other requirements specified in other Sections and that substrates are free of cracks, ridges, depressions, scale, and foreign deposits that might interfere with adhesion of resilient products.

B. Proceed with installation only after unsatisfactory conditions have been corrected.

3.2 PREPARATION

A. Prepare substrates according to manufacturer's written recommendations to ensure adhesion of flooring.

B. Concrete Substrates: Prepare according to ASTM F 710.

1. Verify that substrates are dry and free of curing compounds, sealers, and hardeners.
2. Alkalinity Testing: Perform pH testing according to ASTM F 710. Proceed with installation only if pH readings are not less than 7.0 and not greater than 8.5.
3. Moisture Testing:

a. Perform anhydrous calcium chloride test, ASTM F 1869. Proceed with installation only after substrates have maximum moisture-vapor-emission rate of 3 lb of water/1000 sq. ft. (1.36 kg of water/92.9 sq. m) in 24 hours.

1) Perform tests so that each test area does not exceed 200 sq. ft. (18.6 sq. m), and perform no fewer than two tests in each installation area and with test areas evenly spaced in installation areas.

b. Perform relative humidity test using in-situ probes, ASTM F 2170. Proceed with installation only after substrates have a maximum 75 percent relative humidity level measurement.

C. Remove substrate coatings and other substances that are incompatible with adhesives and that contain soap, wax, oil, or silicone, using mechanical methods recommended in writing by manufacturer. Do not use solvents.

D. Use trowelable leveling and patching compound to fill cracks, holes, and depressions in substrates.

E. Move flooring and installation materials into spaces where they will be installed at least 48 hours in advance of installation unless manufacturer recommends a longer period in writing.

1. Do not install flooring until they are same temperature as space where they are to be installed.

F. Sweep and vacuum clean substrates to be covered by flooring immediately before installation. After cleaning, examine substrates for moisture, alkaline salts, carbonation, and dust.

G. Proceed with installation only after unsatisfactory conditions have been corrected.

3.3 FLOORING INSTALLATION, GENERAL

A. Comply with manufacturer's written installation instructions.

B. Scribe, cut, and fit flooring to butt neatly and tightly to vertical surfaces, equipment anchors, floor outlets, and other interruptions of floor surface.

C. Extend flooring into toe spaces, door reveals, closets, and similar openings unless otherwise indicated.

D. Maintain reference markers, holes, and openings that are in place or marked for future cutting by repeating subfloor markings on flooring. Use nonpermanent, nonstaining marking device.

3.4 SHEET FLOORING INSTALLATION

A. Unroll sheet flooring and allow it to stabilize before cutting and fitting.

B. Lay out sheet flooring as follows:

1. Maintain uniformity of flooring direction.
2. Minimize number of seams; place seams in inconspicuous and low-traffic areas, at least 6 inches (150 mm) away from parallel joints in flooring substrates.
3. Match edges of flooring for color shading at seams.
4. Locate seams per approved Shop Drawings.

C. Adhered Flooring: Adhere products to substrates using a full spread of adhesive applied to substrate to comply with adhesive and flooring manufacturers' written instructions, including those for trowel notching, adhesive mixing, and adhesive open and working times.

1. Provide completed installation without open cracks, voids, raising and puckering at joints, telegraphing of adhesive spreader marks, and other surface imperfections.

D. Vinyl Sheet Flooring Seams: Prepare and finish seams to produce surfaces flush with adjoining flooring surfaces.

1. Heat-Welded Seams: Comply with ASTM F 1516. Rout joints and use welding bead to permanently fuse sections into a seamless flooring.
2. Chemically Bonded Seams: Comply with ASTM F 693. Seal seams to prevent openings from forming between cut edges and to prevent penetration of dirt, liquids, and other substances into seams.

3.5 GAME LINES AND MARKERS

A. Mask flooring at game lines and markers, and apply paint to produce sharp edges. Where crossing, break minor game line at intersection; do not overlap lines.

3.6 FIELD-APPLIED FINISHES

A. Apply finish after game-line and marker paint is fully cured.

B. Apply finish according to manufacturer's written instructions to produce a sealed surface that is ready for use.

C. Do not cover flooring after finishing until finish reaches full cure.

3.7 CLEANING AND PROTECTING

A. Perform the following operations immediately after completing flooring installation:

1. Remove adhesive and other blemishes from flooring surfaces.
2. Sweep and vacuum flooring thoroughly.

3. Damp-mop flooring to remove marks and soil after time period recommended in writing by manufacturer.

B. Protect flooring from mars, marks, indentations, and other damage from construction operations and placement of equipment and fixtures during remainder of construction period. Use protection methods recommended in writing by manufacturer.

1. Do not move heavy and sharp objects directly over flooring. Protect flooring with plywood or hardboard panels to prevent damage from storing or moving objects over flooring.

END OF SECTION 096566

SECTION 096623 – RESINOUS MATRIX TERRAZZO FLOORING

PART 1 - GENERAL

1.1 RELATED DOCUMENTS

A. Drawings and general provisions of the Contract, including General and Supplementary Conditions and Division 1 Specification Sections, apply to this Section.

1.2 SUMMARY

A. This Section includes the following:

1. Thin-set epoxy-resin terrazzo.

B. Related Sections include the following:

1. Division 1 Section 012300 - Alternates.
2. Division 7 Section 07920 - Joint Sealants for sealants installed with terrazzo.

1.3 SUBMITTALS

A. Product Data: For each type of terrazzo and accessory indicated.

B. Shop Drawings: Include terrazzo fabrication and installation requirements. Include plans, elevations, sections, component details, and attachments to other Work. Show layout of the following:

1. Divider and control- and expansion-joint strips.
2. Base and border strips.
3. Precast terrazzo jointing and edge configurations.
4. Terrazzo patterns.

C. Samples for Verification: For each type, material, color, and pattern of terrazzo and accessory required showing the full range of color, texture, and pattern variations expected. Label each terrazzo sample to identify manufacturer's matrix color and aggregate types, sizes, and proportions. Prepare samples of same thickness and from same material to be used for the Work in size indicated below:

1. Epoxy-Resin Terrazzo: 6-inch- (150-mm-) square samples.
2. Accessories: 6-inch- (150-mm-) long samples of each exposed strip item required.

D. Installer Certificates: Signed by manufacturers certifying that installers comply with requirements.

E. Qualification Data: For Installer.

F. Material Certificates: For epoxy terrazzo, in lieu of material test reports, when permitted by Architect, signed by manufacturers.

G. Maintenance Data: For epoxy terrazzo to include in maintenance manuals.

1.4 QUALITY ASSURANCE

A. Installer Qualifications: A qualified installer who is acceptable to epoxy terrazzo manufacturer to install manufacturer's products.

1. Engage an installer who is certified in writing by terrazzo manufacturer as qualified to install manufacturer's products.
2. Engage an installer who is a contractor member of NTMA.

B. Source Limitations: Obtain primary terrazzo materials through one source from a single manufacturer. Provide secondary materials including patching and fill material, joint sealant, and repair materials of type and from source recommended by manufacturer of primary materials.

C. Source Limitations for Aggregates: Obtain each color, grade, type, and variety of aggregate from one source with resources to provide materials of consistent quality in appearance and physical properties.

D. NTMA Standard: Comply with NTMA Guide Specification and written recommendations for terrazzo type indicated unless more stringent requirements are specified.

E. Mockups: Install mockups to verify selections made under sample Submittals and to demonstrate aesthetic effects and qualities of materials and execution.

1. For epoxy-resin terrazzo, install mockups of at least 100 sq. ft. (9 sq. m) of typical flooring and base condition for each color and pattern in locations directed by Architect.
2. Approved mockups may become part of the completed Work if undisturbed at time of Substantial Completion.

F. Preinstallation Conference: Conduct conference at Project site to comply with requirements in Division 1.

1.5 PROJECT CONDITIONS

A. Environmental Limitations: Comply with manufacturer's written instructions for substrate temperature, ambient temperature, moisture, ventilation, and other conditions affecting terrazzo installation.

B. Provide permanent lighting or, if permanent lighting is not in place, simulate permanent lighting conditions during terrazzo installation.

C. Close spaces to traffic during terrazzo application and for not less than 24 hours after application unless manufacturer recommends a longer period.

D. Control and collect dust produced by grinding operations. Protect adjacent construction from detrimental effects of grinding operations.

1. Provide dustproof partitions and temporary enclosures to limit dust migration and to isolate areas from noise.

PART 2 - PRODUCTS

2.1 EPOXY-RESIN TERRAZZO

A. Available Products: Subject to compliance with requirements, products that may be incorporated into the Work include, but are not limited to, the following:

1. ChemRex, Inc./SKW-MBT; Novalite.
2. Crossfield Products Corp., Dex-O-Tex Division.
3. General Polymers Corporation.
4. Key Resin Company; Key Epoxy Terrazzo.
5. Master Terrazzo Technologies, LLC; Morricite.

6. Polymerica Incorporated; MasterPiece ETS.
7. Quadrant Chemical Corporation; Quadset Epoxy Terrazzo.
8. TEC, Inc., an H. B. Fuller Company; Tuff-Lite Epoxy Terrazzo.

B. Thickness: 3/8 inch (9.5 mm).

C. Materials:

1. Flexible Reinforcing Membrane: Manufacturer's resinous membrane for substrate crack preparation and reflective crack reduction.

   a. Reinforcement: Fiberglass scrim.

2. Primer: Product of manufacturer recommended for substrate and use indicated.
3. Epoxy Resin: Manufacturer's standard recommended for use indicated and in color required for mix indicated.

   a. Physical Properties without Aggregates:

      1) Hardness: 60 to 85 per ASTM D 2240, Shore D.
      2) Minimum Tensile Strength: 3000 psi (20.68 MPa) per ASTM D 638 for a 2-inch (50.8-mm) specimen made using a "C" die per ASTM D 412.
      3) Minimum Compressive Strength: 10,000 psi (68.95 MPa) per ASTM D 695, Specimen B cylinder.
      4) Chemical Resistance: No deleterious effects by contaminants listed below after 7-day immersion at room temperature per ASTM D 1308.

         a) Distilled water.
         b) Mineral water.
         c) Isopropanol.
         d) Ethanol.
         e) 0.025 percent detergent solution.
         f) 1.0 percent soap solution.
         g) 10 percent sodium hydroxide.
         h) 10 percent hydrochloric acid.
         i) 30 percent sulfuric acid.
         j) 5 percent acetic acid.

   b. Physical Properties with Aggregates: For resin blended with Georgia White marble, ground, grouted, and cured per requirements in NTMA's "Guide Specification for Epoxy Terrazzo," comply with the following:

      1) Flammability: Self-extinguishing, maximum extent of burning 0.25 inch (6.35 mm) per ASTM D 635.
      2) Thermal Coefficient of Linear Expansion: 0.0025 inch/inch per deg F (0.0025 mm/mm per 0.5556 deg C) for temperature range of minus 12 to 140 deg F (minus 24 to 60 deg C) per ASTM D 696.

4. Marble Chips: Complying with NTMA gradation standards for mix indicated and containing no deleterious or foreign matter.

   a. Hardness: Ha-10 minimum per ASTM C 241.
   b. 24-Hour Absorption Rate: Less than 0.75 percent.
   c. Dust Content: Less than 1.0 percent by weight.

5. Divider-Strip Adhesive: Epoxy-resin adhesive recommended by adhesive manufacturer for this use and acceptable to terrazzo manufacturer.
6. Finishing Grout: Resin based.
7. Seal Coat: Slip resistant, thin-coat terrazzo sealer of or approved by terrazzo manufacturer.

D. Mix: Comply with NTMA's "Guide Specification for Epoxy Terrazzo" and manufacturer's written instructions for component proportions and mixing.

1. Color and Pattern: As indicated.

2.2 DIVIDER AND ACCESSORY STRIPS

A. Heavy-Top Divider Strips: Angle type in depth required for topping thickness indicated.

1. Bottom-Section Material: Galvanized steel.
2. Top-Section Material: White zinc alloy.
3. Top-Section Width: 1/8 inch (3.2 mm).

B. Control-Joint Strips: Separate, double L-type angles, positioned back to back, that match material, thickness, and color of divider strips and in depth required for topping thickness indicated.

C. Accessory Strips: Match divider-strip width, material, and color unless otherwise indicated. Use the following types of accessory strips as required to provide a complete installation:

1. Base bead and base dividers.

2. Edge beads for exposed edges of terrazzo.

2.3 MISCELLANEOUS ACCESSORIES

A. Patching and Fill Material: Resinous product of or approved by terrazzo manufacturer and recommended by manufacturer for application indicated.

B. Joint Sealants: Recommended by terrazzo and sealant manufacturers and complying with requirements in Division 7 Section “Joint Sealants.”

C. Cleaner: Chemically neutral cleaner with pH factor between 7 and 10 that is biodegradable, phosphate free, and recommended by cleaner manufacturer for use on terrazzo type indicated.

PART 3 - EXECUTION

3.1 EXAMINATION

A. Examine substrates and areas, with Installer present, for compliance with requirements for installation tolerances and other conditions affecting performance. Proceed with installation only after unsatisfactory conditions, including levelness tolerances, have been corrected.

3.2 PREPARATION

A. Clean substrates of substances that might impair epoxy terrazzo bond, including oil, grease, and curing compounds.

B. Provide clean, dry, and neutral substrate for terrazzo application. Determine dryness characteristics by performing moisture tests recommended by terrazzo manufacturer.

1. Concrete: Provide sound concrete surfaces free of laitance, glaze, efflorescence, curing compounds, form-release agents, dust, dirt, grease, oil, and other contaminants incompatible with epoxy terrazzo.

    a. Shot-blast surfaces with an apparatus that abrades the concrete surface, contains the dispensed shot within the apparatus, and recirculates the shot by vacuum pickup.
    b. Repair damaged and deteriorated concrete according to terrazzo manufacturer's written recommendations.

2. Concrete Masonry Units: Fill voids and chipped areas with mortar mix to produce smooth, plumb surface.

C. Protect other work from dust generated by grinding operations. Control dust to prevent air pollution and comply with environmental protection regulations.

1. Erect and maintain temporary enclosures and other suitable methods to limit dust migration and to ensure adequate ambient temperatures and ventilation conditions during installation.

3.3 EPOXY-RESIN TERRAZZO INSTALLATION

A. General:

1. Comply with NTMA's written recommendations for terrazzo and accessory installation.
2. Place, rough grind, grout, cure grout, fine grind, and finish terrazzo according to manufacturer's written instructions and NTMA's "Guide Specification for Epoxy-Resin Terrazzo."
3. Ensure that matrix components and fluids from grinding operations do not stain terrazzo by reacting with divider and control-joint strips.
4. Delay fine grinding until heavy trade work is complete and construction traffic through area is restricted.

B. Flexible Reinforcing Membrane:

1. Prepare and prefill substrate cracks with membrane material.
2. Install membrane to produce full substrate coverage in areas to receive terrazzo.
3. Reinforce membrane with fiberglass scrim.
4. Prepare membrane according to manufacturer's written instructions before applying substrate primer.

C. Primer: Apply to terrazzo substrates according to manufacturer's written instructions.

D. Divider and Accessory Strips: Install in locations indicated and as required in adhesive setting bed without voids below strips.

1. Control-Joint Strips: Install back to back directly above substrate control joints.

    a. Install with 1/4-inch (6.4-mm) gap between strips and install sealant in gap.

E. Fine Grinding: Grind with 120 or finer grit stones until all grout is removed from surface. Repeat rough grinding, grout coat, and fine grinding if large voids exist after initial fine grinding. Produce surface with a minimum of 70 percent aggregate exposure.

F. Remove and replace terrazzo areas that evidence lack of bond with substrate. Cut out terrazzo areas in panels defined by strips and replace to match adjacent terrazzo, or repair panels according to NTMA's written recommendations, as approved by Architect.

G. Construction Tolerances: Limit variation in terrazzo surface from level to 1/4 inch in 10 feet (6.4 mm in 3 m).

3.4 CLEANING AND PROTECTING

A. Remove grinding dust from installation and adjacent areas.

B. Wash surfaces with cleaner according to NTMA's written recommendations and manufacturer's written instructions; rinse surfaces with water and allow to dry thoroughly.

C. Seal surfaces according to NTMA's written recommendations. Apply sealer according to sealer manufacturer's written instructions.

D. Provide final protection and maintain conditions, in a manner acceptable to Installer, that ensure terrazzo is without damage or deterioration at time of Substantial Completion.

END OF SECTION 096623

SECTION 096723 - RESINOUS FLOORING

PART 1 - GENERAL

1.1 RELATED DOCUMENTS

A. Drawings and general provisions of the Contract, including General and Supplementary Conditions and Division 01 Specification Sections, apply to this Section.

1.2 SUMMARY

A. This Section includes resinous flooring systems with epoxy body coat(s).

1. Application Method: troweled.

B. Related Sections include the following:

1. Division 3 Section "Cast-in-Place Concrete."

1.3 SUBMITTALS

A. Product Data: For each type of product indicated. Include manufacturer's technical data, application instructions, and recommendations for each resinous flooring component required.

B. Samples for Initial Selection: For each type of exposed finish required.

C. Samples for Verification: For each resinous flooring system required, 6 inches (150 mm) square, applied to a rigid backing by Installer for this Project.

D. Product Schedule: Use resinous flooring designations indicated in Part 2 and room designations indicated on Drawings in product schedule.

E. Installer Certificates: Signed by manufacturer certifying that installers comply with specified requirements.

F. Material Test Reports: For each resinous flooring component.

G. Maintenance Data: For resinous flooring to include in maintenance manuals.

1.4 QUALITY ASSURANCE

A. Installer Qualifications: Engage an experienced installer (applicator) who is experienced in applying resinous flooring systems similar in material, design, and extent to those indicated for this Project, whose work has resulted in applications with a record of successful in-service performance, and who is acceptable to resinous flooring manufacturer.

1. Engage an installer who employs only persons trained and approved by resinous flooring manufacturer for applying resinous flooring systems indicated.
2. Engage an installer who is certified in writing by resinous flooring manufacturer as qualified to apply resinous flooring systems indicated.

B. Source Limitations: Obtain all resinous flooring materials, including but not limited to primers, resins, hardening agents, grouting coats, and topcoats, patching and fill material, joint sealant, and repair materials through one source manufacturer.

1.5 DELIVERY, STORAGE, AND HANDLING

A. Deliver materials in original packages and containers, with seals unbroken, bearing manufacturer's labels indicating brand name and directions for storage and mixing with other components.

B. Store materials to prevent deterioration from moisture, heat, cold, direct sunlight, or other detrimental effects.

1.6 PROJECT CONDITIONS

A. Environmental Limitations: Type-1 Concrete substrate shall be properly cured for a minimum of 30 days. Conduct ASTM-F 1869 Anhydrous Calcium Chloride Test. If moisture vapor emission content of the concrete slab exceeds 5lbs/1000ft2 per 24 hrs, Stonhard OP2 Osmotic Vapor Grout must be used prior to resinous flooring installation. Slab-on grade substrates without Poly vapor-retarder may also require osmotic vapor grout. Comply with resinous flooring manufacturer's written instructions for substrate temperature, ambient temperature, humidity, ventilation, and other conditions affecting resinous flooring application.

B. Lighting: Provide permanent lighting or, if permanent lighting is not in place, simulate permanent lighting conditions during resinous flooring application.

C. Close spaces to traffic during resinous flooring application and for not less than 24 hours after application, unless manufacturer recommends a longer period.

PART 2 - PRODUCTS

2.1 RESINOUS FLOORING AT TOILET ROOMS

A. Basis of Design Products: Subject to compliance with requirements, provide Stonblend GSI as manufactured by Stonhard, Inc. Contact Tom Burns (800)854-0310 or equivalent product approved by architect prior to bidding.

B. System Characteristics:

1. Color and Pattern: As selected by Architect from manufacturer's full range.
2. Wearing Surface: Manufacturer's standard orange-peel texture.
3. Overall System Thickness: 3/16 inch (4.8 mm)
4. Federal Agency Approvals: USDA and FDA approved for food-processing environments.

C. System Components: Manufacturer's standard components that are compatible with each other and as follows:

1. Body Coat(s):

a. Resin: Bisphenol-A Epoxy.
b. Formulation Description: 100 percent solids
c. Application Method: Hand-Troweled with notch-free square steel 18” trowel.

1) Thickness of Coats: 3/16 inch (4.8 mm)
2) Number of Coats: One.

d. Aggregates: Manufacturer's standard.

2. Primer: Type recommended by manufacturer for substrate and body coat(s) indicated.

a. Formulation Description: 100 percent solids

3. Grout Coat

a. Formulation Description: 100 percent solids
b. Type: Clear
c. Number of Coats: One

4. Topcoat: Chemical-resistant and UV-resistant sealing or finish coat(s).

a. Resin: Aliphatic Urethane.
b. Formulation Description: Waterborne Aliphatic Urethane,
c. Type: Clear
d. Finish: Matte
e. Number of Coats: One

D. At all showers and at alcoves between showers in Locker Rooms, provide Stoneblend GSI with added texture. Install per manufacturer’s recommendations.

2.2 RESINOUS FLOORING AT FOOD SERVICE

A. Basis of Design Products: Subject to compliance with requirements, provide Stonshield UTS Contact Tom Burns (800)854-0310 with texture as manufactured by Stonhard, Inc. or equivalent product approved by architect prior to bidding.

B. System Characteristics:

1 Color and Pattern: As selected by Architect from manufacturer's full range.
2 Wearing Surface: Texture for slip resistance.
3. Integral Cove Base: 4 inches (100 mm) high.
5. Overall System Thickness: 1/4 inch (6.4 mm).
6. Federal Agency Approvals: USDA and FDA approved for food-processing environments.

C. System Components: Manufacturer's standard components that are compatible with each other and as follows:

1. Body Coat(s):

a. Resin: Urethane.
b. Formulation Description: 100 percent solids
c. Application Method: Troweled.

1) Thickness of Coats: 1/4 inch (6.4 mm).
2) Number of Coats: One.

d. Aggregates: Manufacturer's standard.

2. Topcoat: Chemical-resistant and UV-resistant sealing or finish coat(s).

a. Resin: Urethane
b. Formulation Description: 100 percent solids
c. Type: Clear,

d. Finish: Gloss.
e. Number of Coats: One

2.3 ACCESSORY MATERIALS

A. Patching and Fill Material: Resinous product of single source resinous flooring manufacturer and recommended by manufacturer for application indicated.

B. Joint Sealant: Type produced by single source resinous flooring manufacturer for type of service and joint condition indicated.

PART 3 - EXECUTION

3.1 PREPARATION

A. General: Prepare and clean substrates according to resinous flooring manufacturer's written instructions for substrate indicated. Provide clean, dry, and neutral Ph substrate for resinous flooring application.

B. Concrete Substrates: Provide sound concrete surfaces free of laitance, glaze, efflorescence, curing compounds, form-release agents, dust, dirt, grease, oil, and other contaminants incompatible with resinous flooring.

1. Roughen concrete substrates as follows:

2. Concrete preparation shall be by mechanical means only and include use of a scabbler, scarifier or shot blast machine for removal of bond inhibiting materials such as curing compounds or laitance. Surface profile achieved shall be similar to medium grit sandpaper. No acid etching or water blasting permitted.

3. Repair damaged and deteriorated concrete according to resinous flooring manufacturer's written recommendations.
4. Verify that concrete substrates are dry.

a. Perform anhydrous calcium chloride test, ASTM F 1869. Proceed with application only after substrates have maximum moisture-vapor-emission rate of 5 lb of water/1000 sq. ft. (1.36 kg of water/92.9 sq. m) of slab in 24 hours.
b. Perform additional moisture tests recommended by manufacturer. Proceed with application only after substrates pass testing.

5. Verify that concrete substrates have neutral Ph and that resinous flooring will adhere to them. Perform tests recommended by manufacturer. Proceed with application only after substrates pass testing.

C. Resinous Materials: All materials used shall be factory pre-weighed and pre-packaged in single, easy to manage batches to eliminate on site mixing errors. No on site weighing or volumetric measurements allowed. Mix components and prepare materials according to resinous flooring manufacturer's written instructions.

D. Use patching and fill material to fill holes and depressions in substrates according to manufacturer's written instructions.

E. Treat control joints and other nonmoving substrate cracks to prevent cracks from reflecting through resinous flooring according to manufacturer's written recommendations.

3.2 APPLICATION

A. General: Apply components of resinous flooring system according to manufacturer's written instructions to produce a uniform, monolithic wearing surface of thickness indicated.

1. Coordinate application of components to provide optimum adhesion of resinous flooring system to substrate, and optimum intercoat adhesion.
2. Cure resinous flooring components according to manufacturer's written instructions. Prevent contamination during application and curing processes.
3. At substrate expansion and isolation joints, provide joint in resinous flooring to comply with resinous flooring manufacturer's written recommendations.

a. Apply joint sealant to comply with manufacturer's written recommendations.

B. Apply primer over prepared substrate at manufacturer's recommended spreading rate.

C. Integral Cove Base: Apply cove base mix to wall surfaces before applying flooring. Apply according to manufacturer's written instructions and details including those for taping, mixing, priming, troweling, sanding, and topcoating of cove base. Round internal and external corners.

D. Apply troweled body coat(s) in thickness indicated for flooring system. Hand or power trowel and grout to fill voids. When cured, sand to remove trowel marks and roughness.

E. Apply grout coat, of type recommended by resinous flooring manufacturer to fill voids in surface of final body coat and to produce wearing surface indicated.

F. Apply topcoat(s) in number of coats indicated for flooring system and at spreading rates recommended in writing by manufacturer.

3.3 CLEANING AND PROTECTING

A. Protect resinous flooring from damage and wear during the remainder of construction period. Use protective methods and materials, including temporary covering, recommended in writing by resinous flooring manufacturer.

END OF SECTION 096723

SECTION 096815 – CARPET

PART 1 - GENERAL

1.1 RELATED DOCUMENTS

A. Drawings and general provisions of the Contract, including General and Supplementary Conditions and Division 1 Specification Sections, apply to this Section.

1.2 SUMMARY

A. Extent, location and details of each type of carpeting are indicated on drawings, in schedules, and by specifications.

B. Work of this section includes furnishing and installation of carpeting, adhesives and accessories.

C. Perform "outgassing" procedures prior to occupancy and acceptance to free all odors and formaldehyde gassing from carpet. Standard procedure to accelerate the seepage of potential environmental "gassing" of the carpet shall be performed.

1.3 RELATED SECTIONS

A. The following Section contains requirements that relate to this Section:

1. Division 9 Section "Resilient Wall Base & Accessories" for wall base.

1.4 SUBMITTALS

A. General: Submit each item in this Article according to the Conditions of the Contract and Division 1 Specification Sections.

B. Product Data: Submit manufacturer's product literature and installation instructions for each type of carpeting material and installation accessory required. Include methods of installation for each type of substrate.

1. Submit written data on physical characteristics, durability, resistance to fading and flame resistance characteristics.

C. Installer Affidavit: Submit affidavit signed by dealer and carpet manufacturer to confirm and acknowledge that the installer is approved by the manufacturer to install manufacturer's product and will follow all installation instructions recommended or required by carpet manufacturer. Provide written confirmation that all requirements of Paragraph 1.5 will be followed.

D. Shop Drawings: Submit shop drawings showing carpet layout and seaming diagrams, clearly indicating carpet pile direction, and locations and types of edge strips. Indicate columns, doorways, enclosing walls or partitions, built-in cabinets, and locations where cutouts are required in carpet. Show installation details at any special conditions.

E. Samples for Initial Selection Purposes: Submit manufacturer's standard size samples and color yarns showing standard range of colors, textures and patterns available for each type of carpet required. Submit samples in full range of manufacturers standard colors of transition strips and accessory items. Architect to select color.

F. Samples for Verification Purposes: Submit the following:

1. 18"x27" samples of each type of sheet carpeting required.
2. Full-size sample of each type of carpet tile required.

3. 6” long samples of each type exposed edge stripping and accessory item.
4. Prepare samples from same material to be used for the work.

G. Submit certification that carpet adhesive meets the requirements of the MSDE technical bulletin “Carpet and Indoor Air Quality in Schools (1993)” for levels of volatile organic compounds.

H. Manufacturer Guarantee: Provide inspection certification and guarantee from manufacturer confirming installation procedures were followed. Coordinate with warranty offered by manufacturer.

I. Maintenance Manual, Carpeting: Submit manual of carpet manufacturer’s complete recommendations for the care, cleaning and maintenance of each type of carpeting.

J. The manufacturer awarded the carpeting contract must provide detailed maintenance procedures within forty-five (45) days of award of contract. Documentation that this program is currently in place must be submitted at the time of bid.

1.5 QUALITY ASSURANCE

A. Manufacturer Qualifications: Firm (material producer) with not less than 5 years of production experience, whose published literature clearly indicates general compliance of products with requirements for this section.

B. Installer Qualifications: Firm specializing in carpet installation with not less than 5 years of experience in installation of carpet similar to type, quantity and installation methods required for this project and approved by carpet manufacturer by submitting written affidavit.

C. Single Source Responsibility: Provide material produced by a single manufacturer for each carpet type.

D. Carpet Surface Burning Characteristics: Provide carpet identical to that tested for the following fire performance characteristics, per test method indicated below, by UL or other testing and inspecting organizations acceptable to authorities having jurisdiction. Identify carpet with appropriate markings of applicable testing and inspecting organization.

1. Test Method: DOC FF 1-70
   Rating: Pass
2. Test Method: ASTM E 84
   Flame Spread: 25 or less
   Smoke Developed: 450 or less

E. Certification: Submit manufacturer's certificate stating that materials furnished comply with specified requirements. Include supporting certified laboratory testing data indicating that material meets specified test requirements.

F. The installation of the carpet must be guaranteed by the manufacturer of the carpet. All installation procedures required/recommended by the manufacturer will be followed and only materials supplied by the manufacturer will be used in order to coordinate with warranties offered by the manufacturer.

G. A pre-construction meeting will be held once the contract has been awarded to review proper installation methods and seaming diagrams with manufacturer’s mill representative, technical installation technician from the mill, carpet installation company or subcontractors if not indicated by “dealer”, construction manager, end user and architect.

1.6 DELIVERY, STORAGE, AND HANDLING

A. Deliver materials to project site in original factory wrappings and containers, clearly labeled with identification of manufacturer, brand name, quality or grade, fire hazard classification, and lot number. Store materials in original undamaged packages and containers, inside well-ventilated area protected from weather, moisture, soiling, extreme temperatures, humidity; laid flat, blocked off ground to prevent sagging and warping. Maintain temperature in storage area above 68 degrees Fahrenheit (20 deg. C) at least three days prior to and during installation.

B. Comply with instructions and recommendations of manufacturer for special delivery, storage and handling requirements.

1.7 PROJECT CONDITIONS

A. Substrate Conditions: No condensation within 48 hours on underside of 4-foot by 4-foot polyethylene sheet, fully taped at perimeter to substrate.

B. Substrate Conditions: pH of 9 or less when substrate wetted with potable water and pHydrion paper applied.

1.8 SEQUENCING AND SCHEDULING

A. Sequence carpet installation with other work to minimize possibility of damage and soiling during remainder of construction period.

1.9 MAINTENANCE

A. Maintenance Instructions: Submit three manufacturer's printed instructions for maintenance of installed work, including methods and frequency recommended for maintaining optimum condition under anticipated traffic and use conditions. Include precautions against materials and methods which may be detrimental to finishes and performance.

B. Replacement Materials: After completion of work, deliver not less than 5% of full width of carpet of each type, color, and pattern selected exclusive of material required to properly complete installation. Furnish accessory components; furnish one box each of replacement materials from same production run as materials installed. Package replacement materials with protective covering, identified with appropriate labels.

1.10 WARRANTY

A. Special Project Warranty: Submit a written warranty, executed by the Contractor, Installer and the Manufacturer, agreeing to repair or replace carpeting which fails in materials or workmanship within the specified warranty period. This warranty shall be in addition to and not a limitation of other rights the Owner may have against the Contractor under the Contract Documents.

1. 10-year stain removal warranty.
2. Lifetime static control warranty.
3. 10-year texture retention warranty.
4. Colorfast warranty which includes 10-year warranty for exposure to sunlight. Five-year warranty for exposure to atmospheric contaminants.
5. Lifetime edge ravel & zippering warranty.
6. Specification Warranty: The manufacturer warrants that the carpet conforms to specifications established for the product identified in the execution section, subject to normal manufacturing tolerances.
7. Five Year Installation Workmanship: Provide special project warranty, signed by contractor and installer, agreeing to repair or replace defective materials and workmanship of carpeting work during 5-year warranty period, without cost to owner, and agreeing to repair or replace other defects beyond

contractor′s/installer′s/manufacturer′s controls at owner′s expense at prevailing rates.

1.11 ENVIRONMENTAL CONDITIONS

A. Airing shall be required during and after carpet installation. The building ventilation system should be continuously operated with maximum outside air for at least 72 hours after the installation is complete. Recirculation of air from area of installation into the HVAC system should be prevented. Reference MSDE Technical Bulletin "Carpet and Indoor Air Quality in Schools (1993)" for more detailed requirements. Items required in this technical bulletin are part of the Contract and will be enforced.

1.12 EXTRA MATERIALS

A. Deliver extra materials to Owner. Furnish extra materials described below matching products installed, packaged with protective covering for storage and identified with appropriate labels. General Contractor is responsible to coordinate turn-in with Board of Education Maintenance.

1. Carpet: Before installation begins, furnish quantity of full-width units equal to 5.0% of amount installed.

PART 2 - PRODUCTS

2.1 GENERAL REQUIREMENTS

A. Carpet shall be first quality manufacture, the product of one manufacturer. No seconds or imperfects will be acceptable.

B. Carpeting shall be permanently moth-proofed by the manufacturer and non-allergenic.

C. Colors and patterns will be selected from the manufacturer's standard color samples. All carpeting of each color shall be from the same dye lot.

2.2 MANUFACTURERS

A. Acceptable Manufacturers: Subject to compliance with requirements, manufacturers offering products that may be incorporated in the work include, but are not limited to, the following:

1. Mannington (Basis of Design)
2. Lee
3. Shaw
4. Mohawk
5. Tandus

2.3 ACCEPTABLE PRODUCTS: Equivalent to the following specified as a basis-of-design.

A. CPT 1: Carpet Tile: 24" x 24": Elemental Brights II – Carbon 15012: by Mannington

1.	Construction	Graphic Loop
2.	Gauge	1/10
3.	Fiber System	Invista Antron Lumena Type 6
4.	Dye Method	Solution
5.	Primary Tufting Substrate	Woven Synthetic

B. CPT 2: Carpet Tile: 24” x 24” Elemental Solids II – Orange 64213: by Mannington

1.	Construction	Graphic Loop
2.	Gauge	1/10
3.	Fiber System	Invista Antron Lumena Type 6
4.	Dye Method	Solution
5.	Primary Tufting Substrate	Woven Synthetic

C. CPT 3: Carpet Tile: 24” x 24” Elemental Solids II – Yellow Orange 63210: by Mannington

1.	Construction	Graphic Loop
2.	Gauge	1/10
3.	Fiber System	Invista Antron Lumena Type 6
4.	Dye Method	Solution
5.	Primary Tufting Substrate	Woven Synthetic

D. CPT 4: Carpet Tile: 24” x 24” Elemental Solids II – Aqua 44185: by Mannington

1.	Construction	Graphic Loop
2.	Gauge	1/10
3.	Fiber System	Invista Antron Lumena Type 6
4.	Dye Method	Solution
5.	Primary Tufting Substrate	Woven Synthetic

E. CPT 5: Carpet Tile: 24” x 24” Elemental Solids II – Blue 35174: by Mannington

1.	Construction	Graphic Loop
2.	Gauge	1/10
3.	Fiber System	Invista Antron Lumena Type 6
4.	Dye Method	Solution
5.	Primary Tufting Substrate	Woven Synthetic

F. CPT6: Carpet Tile: Abrasive Action II by Tandus.

1.	Construction	Accuweave Patterned Loop
2.	Gauge	1/12
3.	Stitches per Inch	8.0
4.	Tuft Density	96 tufts/sq in
5.	Pile Height Average	0.187 inch
6.	Fiber System	TDX Nylon
7.	Dye Method	100% Solution Dyed
8.	Soil/Stain Protection	Ensure

G. Carpet Color and Certificates: Carpet color shall be selected from manufacturer′s stock colors. Contractor shall furnish manufacturer′s certification that registers number of rolls furnished were manufactured in accordance with specification requirements, and all from the same dye lot and manufacturer′s run.

2.4 CARPET ACCESSORIES

A. Carpet Edge Guard, Non-Metallic: Extruded or molded heavy-duty vinyl or rubber in colors selected by Architect from standard colors.

1. Available Manufacturers: Subject to compliance with requirements, manufacturers offering products which may be incorporated in the work include, but are not limited to, the following:

a. Mercer Plastics Company, Inc., Stock #150 Tile - Carpet Joiner, transition strip between VCT and carpet. Color to be selected by Architect from manufacturers standard colors.

B. Carpet Adhesive: Water-resistant, non-staining as recommended by carpet manufacturer, which complies with flammability requirements for installed carpet.

1. Adhesive shall comply with MSDE Technical Bulletin "Carpet and Indoor Air Quality in Schools (1993)" for emitting volatile organic compounds.

C. Seaming Cement: Hot-melt seaming adhesive or similar product recommended by carpet manufacturer, for taping seams and buttering cut edges at backing to form secure seams and preventing pile loss at seams.

D. Miscellaneous Materials: As recommended by manufacturers of carpet and other carpeting products, selected by Installer to meet project circumstances and requirements, and to be submitted to Architect for approval.

PART 3 - EXECUTION

3.1 EXAMINATION

A. Examine substrates for moisture content and other conditions under which carpeting is to be installed. Notify contractor in writing of major conditions detrimental to proper completion of the work. The carpet contractor shall examine surfaces scheduled to receive carpeting for: excessive voids in cement or subsurface texture that are questionable for long term quality of patch, outlets (electrical or non-electrical) that will not be flush with surface once carpeted either prepared by carpet installer or other vendor, debris or other defects that will adversely affect the execution and quality of the new carpet installation. The contractor shall broom clean and prepare floors, at the contractor's expense. Any of these conditions not meeting the carpet installer's approval will be brought to the attention of the CONSTRUCTION MANAGER AND OWNER for their final review and recommendation prior to any carpet installation. Do not proceed until satisfactory conditions have been corrected.

3.2 PREPARATION

A. Repair minor holes, cracks, depressions, and rough areas using material recommended by carpet or adhesive manufacturer. Skim coat all existing substrates with Ardex Feather Finish or equivalent, following manufacturer's instructions for installation.

B. Clear away debris and scrape up cementitious deposits from surfaces to receive carpeting. Apply sealer to prevent dusting.

3.3 INSTALLATION

A. Comply with manufacturer's recommendations for seam locations and direction of carpet; maintain uniformity of carpet direction and lay of pile. Follow seaming diagram as submitted and approved. At doorways, center seams under door in closed position; do not place seams perpendicular to door frame, in direction of traffic through doorway. Do not bridge building expansion joints with continuous carpet. NO RAILROADING OF CARPET authorized without approval from end user. Corridors will show directional change of carpet texture rather than seams every 12'. All rooms 12' and under are to be installed in one continuous piece. No fill pieces allowed! No seams shall occur perpendicular to doorways. All meeting rooms/offices of carpet to be installed parallel to the windows. (Carpet to have seams running parallel to the windows.)

B. Extend carpet under open-bottomed obstructions and under removable flanges and furnishings, and into alcoves and closets of each space.

C. Provide cut-outs where required, and bind cut edges properly where not concealed by protective edge guards or overlapping flanges.

D. Install carpet edge guard where edge of carpet is exposed; anchor guards to substrate.

E. Install transition strips between carpet and other flooring materials.

F. Expansion Joints: Do not bridge building expansion joints with continuous carpeting; provide for movement.

G. Glue-Down Installation:

1. The installation of carpet shall be an indication of the contractor′s acceptance of the sub floors and the responsibility for any unacceptable finished work caused by the sub floor conditions.
2. Installation of all carpeting shall be by glue down method. Carpet shall be securely bonded to the substrate with adhesive as recommended by carpet manufacturer to assure compliance with warranty requirements. Contractor shall apply adhesive uniformly and cover only that amount of area that can be covered by carpet within the recommended working time of adhesive. All seams shall be trimmed and fitted in a workmanlike manner and shall be bonded at the time of installation.
3. All cut edges of woven interlock carpets must be buttered with latex, as available by the carpet manufacturer, in addition to sealing seams with seam sealer available through the carpet manufacturer.
4. The carpet must be neatly and tightly fitted into breaks and recesses, against bases, around pipes and penetrations, under saddles and thresholds, under removable flanges and around permanent cabinets and equipment.

5. All carpet is to run in one lengthwise run in corridors. NO RAILROADING of carpet in corridors is allowed. The texture change is acceptable at intersections rather than directional change and seams in corridors.

3.4 CLEANING

A. Remove adhesive from carpet surface with manufacturer's recommended cleaning agent.

B. Remove and dispose of debris and unusable scraps. Vacuum carpet using commercial machine with face-beater element. Remove spots and replace carpet where spots cannot be removed. Remove any protruding facing yarn using sharp scissors.

3.5 PROTECTION

A. Provide final protection and maintain conditions, in a manner acceptable to manufacturer and installer to ensure carpet is not damaged or deteriorated at time of Substantial Completion.

END OF SECTION 096815

SECTION 098413 – FABRIC-WRAPPED ACOUSTICAL PANELS

PART 1 - GENERAL

1.1 RELATED DOCUMENTS

A. Drawings and general provisions of the Contract, including General and Supplementary Conditions and Division 1 Specification Sections, apply to this Section.

1.2 SUMMARY

A. This Section includes the following:

a. Fabric-wrapped sound-absorbing acoustical panels of size and shape indicated.

1.3 SUBMITTALS

A. Product Data: For each type of product indicated.

B. Shop Drawings: Show fabrication and installation details for acoustical wall panels, including plans, elevations, sections, details, and attachments to other Work.

C. Samples for Initial Selection: Manufacturer's color charts showing the standard range of colors, textures, and patterns available for facing materials for each type of acoustical wall panel indicated. Include samples of installation devices and accessories.

D. Samples for Verification: 8-by-11-inch (200-by-280-mm) units of each type of acoustical wall panel indicated; in sets for each color, texture, and pattern specified for facing materials, showing the full range of variations expected in these characteristics. Include samples of installation devices and accessories.

E. Product Certificates: Signed by manufacturers of acoustical wall panels certifying that products furnished comply with requirements.

F. Qualification Data: For firms and persons specified in "Quality Assurance" Article to demonstrate their capabilities and experience. Include lists of completed projects with project names and addresses, names and addresses of architects and owners, and other information specified.

G. Product Test Reports: From a qualified testing agency indicating acoustical wall panels comply with requirements, based on comprehensive testing of current products.

H. Maintenance Data: For acoustical wall panels and facings to include in maintenance manuals specified in Division 1.

1.4 QUALITY ASSURANCE

A. Manufacturer Qualifications: A firm experienced in manufacturing acoustical wall panels similar to those indicated for this Project and with a record of successful in-service performance.

B. Testing Agency Qualifications: An independent testing agency, acceptable to authorities having jurisdiction, with the experience and capability to conduct the testing indicated, as documented according to ASTM E 548.

C. Source Limitations for Acoustical Wall Panels: Obtain acoustical wall panels from one source with resources to provide products of consistent quality in appearance and physical properties.

D. Fire-Test-Response Characteristics: Provide acoustical wall panels with the following surface-burning characteristics as determined by testing identical products per ASTM E 84 by UL or another testing and inspecting agency acceptable to authorities having jurisdiction. Identify acoustical wall panels with appropriate markings of applicable testing and inspecting agency.

a. Flame Spread: 25 or less.
b. Smoke Developed: 450 or less.

1.5 DELIVERY, STORAGE, AND HANDLING

A. Protect acoustical wall panels from excessive moisture when shipping, storing, and handling. Deliver in unopened bundles and store in a dry place with adequate air circulation. Do not deliver material to building until wet-work, such as concrete and plaster, has been completed and cured to a condition of equilibrium. Protect panel edges from crushing and impact.

B. Factory finish and assemble all components before shipment.

1.6 PROJECT CONDITIONS

A. Environmental Limitations: Do not install acoustical wall panels until construction in spaces is complete and ambient temperature and humidity conditions are maintained at the levels indicated for Project when occupied for its intended use.

B. Air-Quality Limitations: Protect acoustical wall panels from exposure to airborne odors, such as tobacco smoke, and install panels under conditions free from odor contamination of ambient air.

C. Field Measurements: Verify wall surface dimensions by field measurements before fabrication and indicate measurements on Shop Drawings. Coordinate fabrication schedule with construction progress to avoid delaying the Work.

a. Established Dimensions: Where field measurements cannot be made without delaying the Work, establish surface dimensions and proceed with fabricating acoustical wall panels without field measurements. Coordinate wall construction to ensure that actual surface dimensions correspond to established dimensions.

1.7 WARRANTY

A. General Warranty: Special warranty specified in this Article shall not deprive Owner of other rights Owner may have under other provisions of the Contract Documents and shall be in addition to, and run concurrent with, other warranties made by Contractor under requirements of the Contract Documents.

B. Special Warranty: Written warranty, signed by manufacturer agreeing to repair or replace components of acoustical wall panel system that fail in performance, materials, or workmanship within specified warranty period. Failure in performance includes, but is not limited to, acoustical performance. Failure in materials includes, but is not limited to, sagging or distortion of facing or warping of core.

C. Warranty Period: Three years from date of Substantial Completion.

PART 2 - PRODUCTS

2.1 MANUFACTURERS

A. In other Part 2 articles where titles below introduce lists, the following requirements apply to product selection:

1. Basis-of-Design Product: The design for each commercial appliance is based on the product names. Subject to compliance with requirements, provide either the named product or a comparable product by one of the other manufacturers specified.

2.2 FABRIC-WRAPPED ACOUSTICAL PANELS (AWP-1A & AWP-1B)

A. Fabric-wrapped Sound Absorptive Panels (AWP-1A & AWP-1B) in Student Dining C114, Gym C116, Music C123, and Art C125.

1. Basis-of-Design: Subject to compliance with requirements, provide product by CONWED Designscape, Div. of Owen's Corning or comparable product by one of the following:

   a. Wenger Corporation.
   b. Golterman & Sabo.

2. Absorber Panels: Manufacturer's standard high impact resistant construction consisting of 2" thick, 6-7 pcf dimensionally stable glass fiber core with foil backing (no exposed fiberglass) faced with 1/8" high impact resistant, 16-20 pcf molded glass fiber board.

   a. Edge: Wood hardened edge detail with half bevel finish.
   b. Corners: Square.
   c. Finish: Class A rated fabric according to ASTM E-84, fully covered back.
   d. NRC: ASTM C423: 1.00-1.10

3. Sound-Absorption Performance: Provide acoustical wall panels with minimum noise reduction coefficients indicated, as determined by testing per ASTM C 423 for mounting type specified.

4. Mounting Accessories: Manufacturer's standard or recommended accessories for securely mounting panels to substrates.

   a. Mounting: Z-Clips

5. Finishes:

   a. Wall-mounted panels: Manufacturer's woven plain weave 100% polyester 2-ply fabric wrapping entire core and frame and glued to back of frame.
      a) AWP-1A: Fabric to be selected by architect from manufacturer's full range.
      b) AWP-1B: Fabric to be selected by architect from manufacturer's full range.

6. Locations: As indicated on drawings.

7. Selections not identified on color schedule will be made from manufacturer's full range of fabrics and colors.

PART 3 – EXECUTION

3.1 EXAMINATION

A. Examine substrates and blocking, with Installer present, for compliance with requirements for installation tolerances and other conditions affecting acoustical wall panel performance. Proceed with installation only after unsatisfactory conditions have been corrected.

3.2 INSTALLATION

A. Install acoustical wall panels in locations indicated with vertical surfaces and edges plumb, top edges level and in alignment with other panels, and scribed to fit adjoining work accurately at borders and at penetrations. Comply with panel manufacturer's written instructions for installation of panels using type of mounting accessories indicated or, if not indicated, as recommended by manufacturer.

B. Construction Tolerances: As follows:

1. Variation from Plumb and Level: Plus or minus 1/16 inch (1.6 mm).
2. Variation of Joints from Hairline: Not more than 1/16 inch (1.6 mm).

3.3 CLEANING

A. Clip loose threads; remove pills and extraneous materials.

B. Clean panels with fabric facing, on completion of installation, to remove dust and other foreign materials according to manufacturer's written instructions.

C. Remove surplus materials, rubbish, and debris resulting from acoustical wall panel installation, on completion of the Work, and leave areas of installation in a neat and clean condition.

3.4 PROTECTION

A. Provide final protection and maintain conditions, in a manner acceptable to manufacturer and Installer that ensure acoustical wall panels are without damage or deterioration at time of Substantial Completion.

B. Replace panels that cannot be cleaned and repaired, in a manner approved by Architect, before time of Substantial Completion.

END OF SECTION 098413

SECTION 098430 – WOOD VENEER WALL PANELS

PART 1 - GENERAL

1.1 RELATED DOCUMENTS

A. Drawings and general provisions of the Contract, including General and Supplementary Conditions and Division 1 Specification Sections, apply to this Section.

1.2 SUMMARY

A. This Section includes the following:

a. Acoustical and Flat wood veneer wall panels of size and shape indicated in Main Street 100.

b. Flat wood veneer wall panels of size and shape indicated in Auditorium 534 at stage front.

1.3 SUBMITTALS

A. Product Data: For each type of product indicated.

B. Shop Drawings: Show fabrication and installation details for acoustical wall panels, including plans, elevations, sections, details, and attachments to other Work.

C. Samples for Verification: 12-by-12-inch units of each type of acoustical wall panel indicated; in sets for each color and pattern specified, showing the full range of variations expected in these characteristics. Include samples of installation devices and accessories.

D. Product Certificates: Signed by manufacturers of acoustical wall panels certifying that products furnished comply with requirements.

E. Qualification Data: For firms and persons specified in "Quality Assurance" Article to demonstrate their capabilities and experience. Include lists of completed projects with project names and addresses, names and addresses of architects and owners, and other information specified.

F. Maintenance Data: For acoustical wall panels and facings to include in maintenance manuals specified in Division 1.

1.4 QUALITY ASSURANCE

A. Manufacturer Qualifications: A firm experienced in manufacturing acoustical wall panels similar to those indicated for this Project and with a minimum two year record of successful in-service performance.

B. Source Limitations for Acoustical Wall Panels: Obtain acoustical wall panels from one source with resources to provide products of consistent quality in appearance and physical properties.

C. Fire-Test-Response Characteristics: Provide acoustical wall panels with the following surface-burning characteristics as determined by testing identical products per ASTM E 84 by UL or another testing and inspecting agency acceptable to authorities having jurisdiction. Identify acoustical wall panels with appropriate markings of applicable testing and inspecting agency.

a. Flame Spread: 25 or less.
b. Smoke Developed: 450 or less.

1.5 DELIVERY, STORAGE, AND HANDLING

A. Protect acoustical wall panels from excessive moisture when shipping, storing, and handling. Deliver in unopened bundles and store in a dry place with adequate air circulation. Do not deliver material to building until wet-work, such as concrete and plaster, has been completed and cured to a condition of equilibrium. Protect panel edges from crushing and impact.

B. Factory finish and assemble all components before shipment.

C. Store panels in a fully enclosed space, for a minimum of seventy-two (72) hours immediately prior to installation. Store panels in the room in which they will be installed. The temperature and humidity of the room shall closely approximate those conditions that will exist when the building is occupied. Store panels off the floor.

1.6 PROJECT CONDITIONS

A. Environmental Limitations: Do not install acoustical wall panels until construction in spaces is complete and ambient temperature and humidity conditions are maintained at the levels indicated for Project when occupied for its intended use.

B. Air-Quality Limitations: Protect acoustical wall panels from exposure to airborne odors, such as tobacco smoke, and install panels under conditions free from odor contamination of ambient air.

C. Field Measurements: Verify wall surface dimensions by field measurements before fabrication and indicate measurements on Shop Drawings. Coordinate fabrication schedule with construction progress to avoid delaying the Work.

a. Established Dimensions: Where field measurements cannot be made without delaying the Work, establish surface dimensions and proceed with fabricating acoustical wall panels without field measurements. Coordinate wall construction to ensure that actual surface dimensions correspond to established dimensions.

1.7 WARRANTY

A. General Warranty: Special warranty specified in this Article shall not deprive Owner of other rights Owner may have under other provisions of the Contract Documents and shall be in addition to, and run concurrent with, other warranties made by Contractor under requirements of the Contract Documents.

B. Special Warranty: Written warranty, signed by manufacturer agreeing to repair or replace components of acoustical wall panel system that fail in performance, materials, or workmanship within specified warranty period. Revise warranty to period required and verify availability.

C. Warranty Period: Two years from date of Substantial Completion.

PART 2 - PRODUCTS

2.1 MANUFACTURERS

A. In other Part 2 articles where titles below introduce lists, the following requirements apply to product selection:

1. Basis-of-Design Product: The design for each product is based on the product names. Subject to compliance with requirements, provide either the named product or a comparable product by one of the other manufacturers specified.

2.2 WOOD VENEER WALL PANELS (WP-#)

A. Flat Wood Veneer Wall Panels (WP-1).

1. Basis-of-Design: Subject to compliance with requirements, provide Flat Veneer Panel by Rulon International, St. Augustine, Florida or a comparable product by one of the following:

   a. Decoustics.

2. Solid Panels: Manufacturer’s standard construction consisting of flush panels.

   a. Edge: Wood hardened edge detail with return to hide attachment to wall.
   b. Corners: Square.

3. Mounting Accessories: Manufacturer's standard or recommended accessories for securely mounting panels to substrates.

   a. Mounting: Z-Clips

4. Finishes:

   a. Veneer species: Cherry.
   b. Color: As selected by Architect from manufacturer’s full range.
   c. Quartered veneer.
   d. Slip match.
   e. Factory-applied custom stain to match Architect’s sample color.

5. Locations: As indicated on drawings.

B. Acoustical Wood Veneer Wall Panels (WP-2).

1. Basis-of-Design: Subject to compliance with requirements, provide Aluratone 700 by Rulon International, St. Augustine, Florida or a comparable product by one of the following:

   a. Decoustics.

2. Absorber Panels: Manufacturer’s standard construction consisting of perforated acoustical panels with hole perforations that vary in size, quantity and pattern.

   a. 6mm holes on 16mm straight centers.
   b. Edge: Wood hardened edge detail with return to hide attachment to wall.
   c. Corners: Square.

3. Sound-Absorption Performance: Provide acoustical wall panels with NCR .80 as determined by testing per ASTM C 423 for mounting type specified.

4. Mounting Accessories: Manufacturer's standard or recommended accessories for securely mounting panels to substrates.

   a. Mounting: Z-Clips

5. Finishes:

   a. Veneer species: Cherry.
   b. Color: As selected by Architect from manufacturer’s full range.
   c. Quartered veneer.
   d. Slip match.

e. Factory-applied custom stain to match Architect's sample color.

6. Locations: As indicated on drawings.

2.3 FINISHES AND COLORS

A. Panel face and edge surfaces shall be factory finished with a custom stain as selected by the Architect. Product finishes shall be stain or sealer coats – spray applied to a smooth sanded surface.

PART 3 – EXECUTION

3.1 EXAMINATION

A. Examine substrates and blocking, with Installer present, for compliance with requirements for installation tolerances and other conditions affecting acoustical wall panel performance. Proceed with installation only after unsatisfactory conditions have been corrected.

3.2 INSTALLATION

A. Install acoustical wall panels in locations indicated with vertical surfaces and edges plumb, top edges level and in alignment with other panels, and scribed to fit adjoining work accurately at borders and at penetrations. Comply with panel manufacturer's written instructions for installation of panels using type of mounting accessories indicated or, if not indicated, as recommended by manufacturer.

3.3 CLEANING

A. Clean panels to remove dust and other foreign materials according to manufacturer's written instructions.

B. Remove surplus materials, rubbish, and debris resulting from acoustical wall panel installation, on completion of the Work, and leave areas of installation in a neat and clean condition.

3.4 PROTECTION

A. Provide final protection and maintain conditions, in a manner acceptable to manufacturer and Installer that ensure acoustical wall panels are without damage or deterioration at time of Substantial Completion.

B. Replace panels that cannot be cleaned and repaired, in a manner approved by Architect, before time of Substantial Completion.

END OF SECTION 098430

SECTION 099113 - EXTERIOR PAINTING

PART 1 - GENERAL

1.1 RELATED DOCUMENTS

A. Drawings and general provisions of the Contract, including General and Supplementary Conditions and Division 1 Specification Sections, apply to this Section.

1.2 SUMMARY

A. This Section includes surface preparation and the application of paint systems on the following exterior substrates:

1. Steel.
2. Galvanized metal.

B. Related Sections include the following:

1. Division 5 Sections for shop priming of metal substrates with primers specified in this Section.
2. Division 8 Sections for factory priming windows and doors with primers specified in this Section.
3. Division 9 Section "Interior Painting" for surface preparation and the application of paint systems on interior substrates.
4. Division 9 painting Sections for special-use coatings.

1.3 SUBMITTALS

A. Product Data: For each type of product indicated.

B. Product List: For each product indicated, include the following:

1. Cross-reference to paint system and locations of application areas. Use same designations indicated on Drawings and in schedules.
2. Printout of current "MPI Approved Products List" for each product category specified in Part 2, with the proposed product highlighted.
3. Documentation of SSPC-Paint compliance for each product category specified in Part 2.

1.4 QUALITY ASSURANCE

A. SSPC (The Society for Protective Coatings)

1. Products: Complying with SSPC Specifications where indicated.

B. OTC (Ozone Transport Commission)

1. Products: Complying with OTC Regulations regarding lower VOC limits.

C. MPI Standards:

1. Products: Complying with MPI standards indicated and listed in "MPI Approved Products List."

2. Preparation and Workmanship: Comply with requirements in "MPI Architectural Painting Specification Manual" for products and paint systems indicated.

1.5 DELIVERY, STORAGE, AND HANDLING

A. Store materials not in use in tightly covered containers in well-ventilated areas with ambient temperatures continuously maintained at not less than 45 deg F.

1. Maintain containers in clean condition, free of foreign materials and residue.
2. Remove rags and waste from storage areas daily.

1.6 PROJECT CONDITIONS

A. Apply paints only when temperature of surfaces to be painted and ambient air temperatures are between 50 and 95 deg F.

B. Do not apply paints in snow, rain, fog, or mist; when relative humidity exceeds 85 percent; at temperatures less than 5 deg F above the dew point; or to damp or wet surfaces.

PART 2 - PRODUCTS

2.1 MANUFACTURERS

A. Manufacturers: Subject to compliance with requirements, provide products by Sherwin-Williams Company or an equivalent product by one of the following:

1. Benjamin Moore & Co.
2. Columbia Paint & Coatings.
3. Davis Paint Company.
4. Del Technical Coatings.
5. Duron, Inc.
6. Hallman Lindsay Quality Paints.
7. ICI Paints.
8. M.A.B. Paints
9. McCormick Paints
10. PPG Architectural Finishes, Inc.
11. Vista Paint.

2.2 PAINT, GENERAL

A. Material Compatibility:

1. Provide materials for use within each paint system that are compatible with one another and substrates indicated, under conditions of service and application as demonstrated by manufacturer, based on testing and field experience.

B. Colors: As selected by Architect from manufacturer's full range. Up to five (5) Exterior Color Selections.

2.3 METAL PRIMERS

A. Universal Water Based Primer: SSPC-Paint 24

1. Basis of Design: Pro-Cryl (B66-310 Series) by Sherwin-Williams Company.
2. VOC Content: E Range of E1.

2.4 EXTERIOR W.B. COATING

A. Waterborne Pigmented Emulsion Coating (Semigloss): MPI #163 (Gloss Level 5).

1. Basis of Design: Sher-Cryl (B66-300 Series) by Sherwin-Williams Company.

2. VOC Content: E Range of E1

PART 3 - EXECUTION

3.1 EXAMINATION

A. Examine substrates and conditions, with Applicator present, for compliance with requirements for maximum moisture content and other conditions affecting performance of work.

B. Verify suitability of substrates, including surface conditions and compatibility with existing finishes and primers.

C. Begin coating application only after unsatisfactory conditions have been corrected and surfaces are dry.

1. Beginning coating application constitutes Contractor's acceptance of substrates and conditions.

3.2 PREPARATION

A. Comply with manufacturer's written instructions and recommendations in "MPI Architectural Painting Specification Manual" applicable to substrates and paint systems indicated.

B. Remove plates, machined surfaces, and similar items already in place that are not to be painted. If removal is impractical or impossible because of size or weight of item, provide surface-applied protection before surface preparation and painting.

1. After completing painting operations, use workers skilled in the trades involved to reinstall items that were removed. Remove surface-applied protection if any.
2. Do not paint over labels of independent testing agencies or equipment name, identification, performance rating, or nomenclature plates.

C. Clean substrates of substances that could impair bond of paints, including dirt, oil, grease, and incompatible paints and encapsulants.

1. Remove incompatible primers and reprime substrate with compatible primers as required to produce paint systems indicated.

D. Steel Substrates: Remove rust and loose mill scale. Clean using methods recommended in writing by paint manufacturer.

E. Galvanized-Metal Substrates: Remove grease and oil residue from galvanized sheet metal fabricated from coil stock by mechanical methods to produce clean, lightly etched surfaces that promote adhesion of subsequently applied paints.

3.3 APPLICATION

A. Apply paints according to manufacturer's written instructions.

1. Use applicators and techniques suited for paint and substrate indicated.
2. Paint surfaces behind movable items same as similar exposed surfaces. Before final installation, paint surfaces behind permanently fixed items with prime coat only.

B. Tint each undercoat a lighter shade to facilitate identification of each coat if multiple coats of same material are to be applied. Tint undercoats to match color of topcoat, but provide sufficient difference in shade of undercoats to distinguish each separate coat.

C. If undercoats or other conditions show through topcoat, apply additional coats until cured film has a uniform paint finish, color, and appearance.

D. Apply paints to produce surface films without cloudiness, spotting, holidays, laps, brush marks, roller tracking, runs, sags, ropiness, or other surface imperfections. Cut in sharp lines and color breaks.

3.4 FIELD QUALITY CONTROL

A. Testing of Paint Materials: Owner reserves the right to invoke the following procedure at any time and as often as Owner deems necessary during the period when paints are being applied:

1. Owner will engage the services of a qualified testing agency to sample paint materials being used. Samples of material delivered to Project site will be taken, identified, sealed, and certified in presence of Contractor.
2. Testing agency will perform tests for compliance of paint materials with product requirements.
3. Owner may direct Contractor to stop applying paints if test results show materials being used do not comply with product requirements. Contractor shall remove noncomplying-paint materials from Project site, pay for testing, and repaint surfaces painted with rejected materials. Contractor will be required to remove rejected materials from previously painted surfaces if, on repainting with complying materials, the two paints are incompatible.

3.5 CLEANING AND PROTECTION

A. At end of each workday, remove rubbish, empty cans, rags, and other discarded materials from Project site.

B. After completing paint application, clean spattered surfaces. Remove spattered paints by washing, scraping, or other methods. Do not scratch or damage adjacent finished surfaces.

C. Protect work of other trades against damage from paint application. Correct damage to work of other trades by cleaning, repairing, replacing, and refinishing, as approved by Architect, and leave in an undamaged condition.

D. At completion of construction activities of other trades, touch up and restore damaged or defaced painted surfaces.

3.6 EXTERIOR PAINTING SCHEDULE

A. Steel and Galvanized-Metal Substrates:

1. Waterborne System:

a. Prime Coat: Universal Water Based Primer.
b. Intermediate Coat and Topcoat: Exterior W.B. Coating (semigloss).

END OF SECTION 099113

SECTION 099123 - INTERIOR PAINTING

PART 1 - GENERAL

1.1 RELATED DOCUMENTS

A. Drawings and general provisions of the Contract, including General and Supplementary Conditions and Division 1 Specification Sections, apply to this Section.

1.2 SUMMARY

A. This Section includes surface preparation and the application of paint systems on the following interior surface materials:

1. Concrete masonry units (CMU).
2. Steel.
3. Galvanized metal.
4. Gypsum board.
5. Wood.

B. Related Sections include the following:

1. Division 5 Sections for shop priming of metal with primers specified in this Section.
2. Division 6 Sections for shop priming carpentry with primers specified in this Section.
3. Division 8 Sections for factory priming windows and doors with primers specified in this Section.
4. Division 9 Section "Exterior Painting" for surface preparation and the application of paint systems on exterior surface materials.
5. Division 9 Section “High-performance Coatings.”

1.3 SUBMITTALS

A. Product Data: For each type of product indicated.

B. Product List: For each product indicated, include the following:

1. Cross-reference to paint system and locations of application areas. Use same designations indicated on Drawings and in schedules.
2. Printout of current "MPI Approved Products List" for each product category specified in Part 2, with the proposed product highlighted.
3. Documentation of SSPC-Paint compliance for each product category specified in Part 2.

1.4 QUALITY ASSURANCE

A. SSPC (The Society for Protective Coatings)

1. Products: Complying with SSPC Specifications where indicated.

B. OTC (Ozone Transport Commission)

1. Products: Complying with OTC Regulations regarding lower VOC limits

C. MPI Standards:

1. Products: Complying with MPI standards indicated and listed in "MPI Approved Products List."
2. Preparation and Workmanship: Comply with requirements in "MPI Architectural Painting Specification Manual" for products and paint systems indicated.

1.5 DELIVERY, STORAGE, AND HANDLING

A. Store materials not in use in tightly covered containers in well-ventilated areas with ambient temperatures continuously maintained at not less than 45 deg F.

1. Maintain containers in clean condition, free of foreign materials and residue.
2. Remove rags and waste from storage areas daily.

1.6 PROJECT CONDITIONS

A. Apply paints only when temperature of surfaces to be painted and ambient air temperatures are between 50 and 95 deg F.

B. Do not apply paints when relative humidity exceeds 85 percent; at temperatures less than 5 deg F above the dew point; or to damp or wet surfaces.

PART 2 - PRODUCTS

2.1 MANUFACTURERS

A. Manufacturers: Subject to compliance with requirements, provide products by Sherwin-Williams Company or an equivalent product by one of the following:

1. Benjamin Moore & Co.
2. Columbia Paint & Coatings.
3. Davis Paint Company.
4. Del Technical Coatings.
5. Duron, Inc.
6. Hallman Lindsay Quality Paints.
7. ICI Paints.
8. M.A.B. Paints.
9. McCormick Paints.
10. PPG Architectural Finishes, Inc.
11. Vista Paint.

2.2 PAINT, GENERAL

A. Material Compatibility:

1. Provide materials for use within each paint system that are compatible with one another and substrates indicated, under conditions of service and application as demonstrated by manufacturer, based on testing and field experience.
2. For each coat in a paint system, provide products recommended in writing by manufacturers of topcoat for use in paint system and on substrate indicated.

B. Colors: As selected by Architect from manufacturer's full range. See color schedule on drawings.

C. Graphics and Accents: As designated on drawings and in Color Schedule.

2.3 BLOCK FILLERS

A. Interior/Exterior Latex Block Filler: MPI #4.

1. VOC Content: E Range of E3.Basis of Design: PrepRite Block Filler (B25W25) by Sherwin-Williams Company.

2.4 PRIMERS/SEALERS

A. Interior Latex Primer/Sealer: MPI #50.

1. VOC Content: E Range of E2.
2. Basis of Design: Harmony Interior Latex Primer by Sherwin-Williams Company.

B. Interior Latex Primer/Sealer for WOOD: MPI #50.

1. VOC Content: E Range of E2.
2. Basis of Design: PrepRite 200 Interior Latex Primer by Sherwin-Williams Company.

2.5 METAL PRIMERS

A. Universal Water Based Primer: SSPC-Paint 24.

1. VOC Content: E Range of E1.
2. Basis of Design: Pro-Cryl (B66-310 Series) by Sherwin-Williams Company.

2.6 WATERBORNE COATING

A. Waterborne Pigmented Emulsion Coating (Semigloss): MPI #163 (Gloss Level 5)

1. VOC Content: E Range of E1
2. Basis of Design: Sher-Cryl (B66-300 Series) by Sherwin-Williams Company.

2.7 LATEX PAINTS

A. Institutional Low-Odor/VOC Latex (Eggshell): MPI #144 (Gloss Level 2).

1. VOC Content: E Range of E3.
2. Basis of Design: Harmony Low Odor Interior Latex Finish by Sherwin-Williams Company.

B. Institutional Low-Odor/VOC Latex (Semigloss): MPI #147 (Gloss Level 5).

1. VOC Content: E Range of E3.
2. Basis of Design: Harmony Low Odor Interior Latex Finish by Sherwin-Williams Company.

2.8 CONCRETE SEALER / REFINISHING SYSTEM

A. Concrete re-finishing system: Penetrating, non-film forming concrete treatment.

1. Identified as “Color Sealer” on the Finish Schedule.

a. VOC Content: 0
b. Skid Resistance: NFSI – Standard 101.A – High Traction
c. Static of Coefficient Wet: 0.6 – 1.0.

2. Basis of Design: FGS PermaShine System by L&M Construction Chemicals, Inc.

PART 3 - EXECUTION

3.1 EXAMINATION

A. Examine substrates and conditions, with Applicator present, for compliance with requirements for maximum moisture content and other conditions affecting performance of work.

B. Maximum Moisture Content of Surface Materials: When measured with an electronic moisture meter as follows:

1. Concrete: 12 percent.
2. Masonry (Clay and CMU): 12 percent.
3. Wood: 15 percent.
4. Gypsum Board: 12 percent.

C. Verify suitability of surface materials, including surface conditions and compatibility with existing finishes and primers.

D. Begin coating application only after unsatisfactory conditions have been corrected and surfaces are dry.

1. Beginning coating application constitutes Contractor's acceptance of surface materials and conditions.

3.2 PREPARATION

A. Comply with manufacturer's written instructions and recommendations in "MPI Architectural Painting Specification Manual" applicable to surface materials indicated.

B. Remove plates, machined surfaces, and similar items already in place that are not to be painted. If removal is impractical or impossible because of size or weight of item, provide surface-applied protection before surface preparation and painting.

1. After completing painting operations, use workers skilled in the trades involved to reinstall items that were removed. Remove surface-applied protection if any.
2. Do not paint over labels of independent testing agencies or equipment name, identification, performance rating, or nomenclature plates.

C. Clean surface materials of substances that could impair bond of paints, including dirt, oil, grease, and incompatible paints and encapsulants.

1. Remove incompatible primers and reprime with compatible primers as required to produce paint systems indicated.

D. Concrete: Remove release agents, curing compounds, efflorescence, and chalk. Do not paint surfaces if moisture content or alkalinity of surfaces to be painted exceeds that permitted in manufacturer's written instructions.

E. Clay Masonry: Remove efflorescence and chalk. Do not paint surfaces if moisture content of surfaces or alkalinity of mortar joints to be painted exceed that permitted in manufacturer's written instructions.

F. Concrete Masonry: Remove efflorescence and chalk. Do not paint surfaces if moisture content or alkalinity of surfaces to be painted exceeds that permitted in manufacturer's written instructions.

G. Steel: Remove rust and loose mill scale. Clean using methods recommended in writing by paint manufacturer.

H. Galvanized-Metal: Remove grease and oil residue from galvanized sheet metal fabricated from coil stock by mechanical methods to produce clean, lightly etched surfaces that promote adhesion of subsequently applied paints.

I. Aluminum: Remove surface oxidation.

J. Wood:

1. Scrape multiple layers of existing paint to ensure proper adhesion of new paint. Field verify existing surfaces to be painted to become familiar with the existing surfaces to be re-painted.
2. Scrape and clean knots, and apply coat of knot sealer before applying primer.
3. Sand surfaces that will be exposed to view, and dust off.
4. Prime edges, ends, faces, undersides, and backsides of wood.
5. After priming, fill holes and imperfections in the finish surfaces with putty or plastic wood filler. Sand smooth when dried.

K. Gypsum Board: Do not begin paint application until finishing compound is dry and sanded smooth.

L. Existing Concrete: Prepare existing surfaces with a dry diamond grinding / vacuum process. Assume 800 grit finish – 5 step minimum process by a Concrete Refinishing System Manufacturer approved installer.

3.3 APPLICATION

A. Apply paints according to manufacturer's written instructions.

1. Use applicators and techniques suited for paint and substrate indicated.
2. Paint surfaces behind movable equipment and furniture same as similar exposed surfaces. Before final installation, paint surfaces behind permanently fixed equipment or furniture with prime coat only.
3. Paint front and backsides of access panels, removable or hinged covers, and similar hinged items to match exposed surfaces.

B. If undercoats or other conditions show through topcoat, apply additional coats until cured film has a uniform paint finish, color, and appearance.

C. If primers are chipped, apply additional touch-up primer until full coverage is achieved prior to application of topcoats.

D. Apply paints to produce surface films without cloudiness, spotting, holidays, laps, brush marks, roller tracking, runs, sags, ropiness, or other surface imperfections. Cut in sharp lines and color breaks.

E. Painting Mechanical and Electrical Work: Paint items exposed in equipment rooms and occupied spaces including, but not limited to, the following:

1. Mechanical Work:

a. Uninsulated metal piping.
b. Uninsulated plastic piping.
c. Pipe hangers and supports.
d. Tanks that do not have factory-applied final finishes.
e. Visible portions of internal surfaces of metal ducts, without liner, behind air inlets and outlets.
f. Duct, equipment, and pipe insulation having cotton or canvas insulation covering or other paintable jacket material.
g. Mechanical equipment that is indicated to have a factory-primed finish for field painting.

2. Electrical Work:

   a. Switchgear.
   b. Panelboards.
   c. Electrical equipment that is indicated to have a factory-primed finish for field painting.

3.4 FIELD QUALITY CONTROL

A. Testing of Paint Materials: Owner reserves the right to invoke the following procedure at any time and as often as Owner deems necessary during the period when paints are being applied:

   1. Owner will engage the services of a qualified testing agency to sample paint materials being used. Samples of material delivered to Project site will be taken, identified, sealed, and certified in presence of Contractor.
   2. Testing agency will perform tests for compliance with product requirements.
   3. Owner may direct Contractor to stop applying paints if test results show materials being used do not comply with product requirements. Contractor shall remove noncomplying-paint materials from Project site, pay for testing, and repaint surfaces painted with rejected materials. Contractor will be required to remove rejected materials from previously painted surfaces if, on repainting with complying materials, the two paints are incompatible.

3.5 CLEANING AND PROTECTION

A. At end of each workday, remove rubbish, empty cans, rags, and other discarded materials from Project site.

B. After completing paint application, clean spattered surfaces. Remove spattered paints by washing, scraping, or other methods. Do not scratch or damage adjacent finished surfaces.

C. Protect work of other trades against damage from paint application. Correct damage to work of other trades by cleaning, repairing, replacing, and refinishing, as approved by Architect, and leave in an undamaged condition.

D. At completion of construction activities of other trades, touch up and restore damaged or defaced painted surfaces.

3.6 INTERIOR PAINTING SCHEDULE

A. CMU:

   1. Institutional Low-Odor/VOC Latex System:

      a. Prime Coat: Interior/exterior latex block filler.
      b. Intermediate Coat: Institutional low-odor/VOC interior latex matching topcoat.
      c. Topcoat: Institutional low-odor/VOC interior latex (semigloss).

B. Steel and Galvanized-Metal:

   1. Waterborne System:

      a. Prime Coat: Universal Water Based Primer).
      b. Intermediate Coat: Waterborne Coating.
      c. Topcoat: Waterborne Coating (semigloss).

C. Gypsum Board:

1. Institutional Low-Odor/VOC Latex System:

    a. Prime Coat: Interior latex primer/sealer.
    b. Intermediate Coat: Institutional low-odor/VOC interior latex matching topcoat.
    c. Topcoat: Institutional low-odor/VOC interior latex (eggshell).

D. Wood (Opaque finish):

1. Institutional Low-Odor/VOC Latex System:

    a. Prime Coat: Interior latex primer/sealer for WOOD.
    b. Intermediate Coat: Institutional low-odor/VOC interior latex matching topcoat.
    c. Topcoat: Institutional low-odor/VOC interior latex (eggshell).

E. Wood (Natural finish):

1. Institutional Low-Odor/VOC polyurethane system:

    a. Prime Coat: Interior latex primer/sealer.
    b. Filler Coat: Institutional low-odor/VOC paste wood filler.
    c. Intermediate Coat: Institutional low-odor/VOC urethane matching topcoat.
    d. Topcoat: Institutional low-odor/VOC urethane (gloss).

F. Existing Concrete:

1. Concrete re-finishing system:

    a. Preparation: Dry diamond grinding process, repeated as necessary to a depth no greater than 1/32”.
    b. Two-Coat Application: FGS Hardener Plus.

END OF SECTION 099123

SECTION 099600 - HIGH-PERFORMANCE COATINGS

PART 1 - GENERAL

1.1 RELATED DOCUMENTS

A. Drawings and general provisions of the Contract, including General and Supplementary Conditions and Division 1 Specification Sections, apply to this Section.

1.2 SUMMARY

A. This Section includes surface preparation and application of high-performance coating systems on the following substrates:

1. Interior Substrates:

a. Concrete masonry units (CMU) as noted.
b. Gypsum board as noted.
c. Steel stairs, pipe and tube railings (typical).

B. Related Sections include the following:

1. Division 5 Sections for shop priming of metal substrates with primers specified in this Section.
2. Division 9 painting Sections for special-use coatings and general field painting.

1.3 SUBMITTALS

A. Product Data: For each type of product indicated.

B. Product List: For each product indicated. Cross-reference products to coating system and locations of application areas. Use same designations indicated on Drawings and in schedules.

1.4 QUALITY ASSURANCE

A. Master Painters Institute (MPI) Standards:

1. Products: Complying with MPI standards indicated and listed in "MPI Approved Products List."
2. Preparation and Workmanship: Comply with requirements in "MPI Architectural Painting Specification Manual" for products and coating systems indicated.

1.5 DELIVERY, STORAGE, AND HANDLING

A. Store materials not in use in tightly covered containers in well-ventilated areas with ambient temperatures continuously maintained at not less than 45 deg F.

1. Maintain containers in clean condition, free of foreign materials and residue.
2. Remove rags and waste from storage areas daily.

1.6 PROJECT CONDITIONS

A. Apply coatings only when temperature of surfaces to be coated and surrounding air temperatures are between 50 and 95 deg F.

B. Do not apply coatings in snow, rain, fog, or mist; when relative humidity exceeds 85 percent; at temperatures less than 5 deg F above the dew point; or to damp or wet surfaces.

PART 2 - PRODUCTS

2.1 HIGH-PERFORMANCE COATINGS, GENERAL

A. Material Compatibility:

1. Provide materials for use within each coating system that are compatible with one another and substrates indicated, under conditions of service and application as demonstrated by manufacturer, based on testing and field experience.
2. Provide products of same manufacturer for each coat in a coating system.

B. Colors: As selected by Architect from manufacturer's full range. See color schedule on drawings.

2.2 BLOCK FILLERS

A. Interior/Exterior Latex Block Filler: MPI#4.

1. Products: Subject to compliance with requirements, provide products by Sherwin-Williams Company or the equivalent products by one of the following:

a. Sherwin-Williams Company (The); PrepRite, Int/Ext Block Filler, B25W25

b. Benjamin Moore & Co.; Moorcraft, Super Craft Latex Block Filler, 285-01.
c. Columbia Paint & Coatings; High Performance, Int/Ext Acrylic Latex Block Filler, 05-055-PP.
d. Coronado Paint; Super Kote 5000, Commercial Latex Block Filler, 946-11.
e. General Paint; Block Filler, 70-224.
f. ICI Paints; Devoe Coatings, Bloxfil Acrylic Block Filler, 4000.
g. Miller Paint; Ext. Block Filler, 6015.
h. PPG Architectural Finishes, Inc.; Interior/Exterior Latex Block Filler, 6-12.
i. Vista Paint; Block Kote, 040.

2.3 EPOXY COATINGS

A. Epoxy, Cold-Cured, Gloss: MPI #77.

1. Products: Subject to compliance with requirements, provide products by Sherwin-Williams Company or the equivalent products by one of the following:

a. Sherwin-Williams Company (The); Pro Industrial High Performance, (Basis-of-Design).
b. Benjamin Moore & Co.; Polyamide Epoxy Coating, CM36/CM37.
c. Columbia Paint & Coatings; Insl-x, Insl-Tile II, EP-5300.
d. Coronado Paint; Polyamide Epoxy Coating, 101 Line.
e. ICI Paints; Devoe/Fuller, Guardcote, DP34UXX.
f. Miller Paint; PPG Aquapon, Epoxy Cold Cured - Gloss, 95-1.
g. PPG Architectural Finishes, Inc.; Aquapon, Epoxy Cold Cured Gloss, 95-1.
h. Spectra-Tone; Insl-x, Insl-Tile II, EP5300 Series.
i. Tower Paint; Epoxy High Gloss Enamel, T8700.

B. Water-Based Epoxy (Interior and Exterior): MPI #115.

1. Products: Subject to compliance with requirements, provide products by Sherwin-Williams Company or the equivalent products by one of the following:

    a. Sherwin-Williams Company (The); Industrial & Marine, Water Based Catalyzed Epoxy, B70W Series (Basis-of-Design).

    b. Benjamin Moore & Co.; Acrylic Epoxy Gloss "A", Hardener "B", M43/M44.
    c. Columbia Paint & Coatings; Dupont, Corlar Waterborne Acrylic Epoxy, 76P.
    d. Coronado Paint; Water-Based Amine Adduct Epoxy, 142 Line.
    e. General Paint, Ameron; Amercoat 335, 96 Line.
    f. ICI Paints; Devoe Coatings, Tru Glaze WB Epoxy Coating, 4418.
    g. Miller Paint; Waterborne Epoxy Gloss, 4300/4440.
    h. PPG Architectural Finishes, Inc.; Aquapon, Waterborne Epoxy, 98-1/98-98.
    i. Spectra-Tone; Insl-x Aqua-Tile W.B. Epoxy, ATA 100 Series.
    j. Tower Paint, Sierra, Wall & Trim Enamel, S50.

PART 3 - EXECUTION

3.1 EXAMINATION

A. Examine substrates and conditions, with Applicator present, for compliance with requirements for maximum moisture content and other conditions affecting performance of work.

1. Maximum Moisture Content of Substrates: When measured with an electronic moisture meter as follows:

    a. Masonry (Clay and CMU): 12 percent.

2. Verify compatibility with and suitability of substrates, including compatibility with existing finishes or primers.
3. Begin coating application only after unsatisfactory conditions have been corrected and surfaces are dry.
4. Coating application indicates acceptance of surfaces and conditions.

3.2 PREPARATION

A. Comply with manufacturer's written instructions and recommendations in "MPI Architectural Painting Specification Manual" applicable to substrates indicated.

B. Remove plates, machined surfaces, and similar items already in place that are not to be coated. If removal is impractical or impossible because of size or weight of item, provide surface-applied protection before surface preparation and coating.

1. After completing coating operations, reinstall items that were removed; use workers skilled in the trades involved.

C. Clean substrates of substances that could impair bond of coatings, including dirt, oil, grease, and incompatible paints and encapsulants.

1. Remove incompatible primers and reprime substrate with compatible primers as required to produce coating systems indicated.

D. Clay Masonry Substrates: Remove efflorescence and chalk. Do not coat surfaces if moisture content or alkalinity of surfaces to be coated exceeds that permitted in manufacturer's written instructions.

1. Clean surfaces with pressurized water. Use pressure range of 100 to 600 psi at 6 to 12 inches.

E. CMU Substrates: Remove efflorescence and chalk. Do not coat surfaces if moisture content or alkalinity of surfaces to be coated exceeds that permitted in manufacturer's written instructions.

3.3 APPLICATION

A. Apply high-performance coatings according to manufacturer's written instructions.

1. Use applicators and techniques suited for coating and substrate indicated.
2. Coat surfaces behind movable equipment and furniture same as similar exposed surfaces. Before final installation, coat surfaces behind permanently fixed equipment or furniture with prime coat only.
3. Coat back sides of access panels, removable or hinged covers, and similar hinged items to match exposed surfaces.

B. If undercoats or other conditions show through final coat, apply additional coats until cured film has a uniform coating finish, color, and appearance.

C. Apply coatings to produce surface films without cloudiness, spotting, holidays, laps, brush marks, runs, sags, ropiness, or other surface imperfections. Produce sharp glass lines and color breaks.

3.4 CLEANING AND PROTECTION

A. At end of each workday, remove rubbish, empty cans, rags, and other discarded materials from Project site.

B. After completing coating application, clean spattered surfaces. Remove spattered coatings by washing, scraping, or other methods. Do not scratch or damage adjacent finished surfaces.

C. Protect work of other trades against damage from coating operation. Correct damage by cleaning, repairing, replacing, and recoating, as approved by Architect, and leave in an undamaged condition.

D. At completion of construction activities of other trades, touch up and restore damaged or defaced coated surfaces.

3.5 INTERIOR HIGH-PERFORMANCE COATING SCHEDULE

A. CMU / Glazed CMU Substrates:

1. Water-Based Epoxy Coating System:

a. Prime Coat: Interior/exterior latex block filler, MPI #4.
b. Intermediate Coat: Water-based epoxy (interior and exterior), MPI #115.
c. Topcoat: Water-based epoxy (interior and exterior), MPI #115.

B. Gypsum Board Substrates:

1. Epoxy System:

a. Prime Coat: Primer sealer, latex, interior, MPI #50.
b. Intermediate Coat: Epoxy, gloss, MPI #77.
c. Topcoat: Epoxy, gloss, MPI #77.

C. Steel Substrates:

1. Pigmented Polyurethane over High-Build Epoxy System:

a. Prime Coat: Primer, epoxy, as recommended in writing by topcoat manufacturer.
b. Intermediate Coat: Epoxy, high-build, low gloss, MPI #108.
c. Topcoat: Polyurethane, two-component, pigmented, gloss (Gloss Level 6), MPI #72.

END OF SECTION 099600

SECTION 101100 - VISUAL DISPLAY UNITS

PART 1 - GENERAL

1.1 RELATED DOCUMENTS

A. Drawings and general provisions of the Contract, including General and Supplementary Conditions and Division 01 Specification Sections, apply to this Section.

1.2 SUMMARY

A. Section Includes:
   1. Markerboards.
   2. Tackboards.
   3. Visual display rails.

B. Related Sections:

   1. Section 097723 "Fabric-Wrapped Panels" for tackable, fabric-covered wall surfaces.
   2. Section 101200 "Display Cases" for bulletin boards in built-in trophy and display cases.

1.3 DEFINITIONS

A. Tackboard: Framed or unframed, tackable, visual display board assembly.

B. Visual Display Board Assembly: Visual display surface that is factory fabricated into composite panel form, either with or without a perimeter frame; includes chalkboards, markerboards, and tackboards.

C. Visual Display Surface: Surfaces that are used to convey information visually, including surfaces of chalkboards, markerboards, tackboards, and surfacing materials that are not fabricated into composite panel form but are applied directly to walls.

1.4 ACTION SUBMITTALS

A. Product Data: For each type of product indicated.

B. Shop Drawings: For visual display surfaces. Include plans, elevations, sections, details, and attachments to other work.

   1. Show locations of panel joints.
   2. Include sections of typical trim members.

C. Samples for Initial Selection: For each type of visual display surface indicated, for units with factory-applied color finishes, and as follows:

   1. Actual sections of porcelain-enamel face sheet, tackboard assembly, and display rail.

D. Product Schedule: For visual display surfaces. Use same designations indicated on Drawings.

1.5 CLOSEOUT SUBMITTALS

A. Operation and Maintenance Data: For visual display surfaces to include in maintenance manuals.

1.6 QUALITY ASSURANCE

A. Installer Qualifications: Manufacturer's authorized representative who is trained and approved for installation of motor-operated, sliding visual display units required for this Project.

B. Source Limitations: Obtain visual display surfaces from single source from single manufacturer.

C. Surface-Burning Characteristics: As determined by testing identical products according to ASTM E 84 by a qualified testing agency. Identify products with appropriate markings of applicable testing agency.

1. Flame-Spread Index: 25 or less.
2. Smoke-Developed Index: 50 or less.

1.7 DELIVERY, STORAGE, AND HANDLING

A. Deliver factory-built visual display surfaces, including factory-applied trim where indicated, completely assembled in one piece without joints, where possible. If dimensions exceed maximum manufactured panel size, provide two or more pieces of equal length as acceptable to Architect. When overall dimensions require delivery in separate units, prefit components at the factory, disassemble for delivery, and make final joints at the site.

B. Store visual display surfaces vertically with packing materials between each unit.

1.8 PROJECT CONDITIONS

A. Environmental Limitations: Do not deliver or install visual display surfaces until spaces are enclosed and weathertight, wet work in spaces is complete and dry, work above ceilings is complete, and temporary HVAC system is operating and maintaining ambient temperature and humidity conditions at occupancy levels during the remainder of the construction period.

B. Field Measurements: Verify actual dimensions of construction contiguous with visual display surfaces by field measurements before fabrication.

1. Allow for trimming and fitting where taking field measurements before fabrication might delay the Work.

1.9 WARRANTY

A. Special Warranty for Porcelain-Enamel Face Sheets: Manufacturer's standard form in which manufacturer agrees to repair or replace porcelain-enamel face sheets that fail in materials or workmanship within specified warranty period.

1. Failures include, but are not limited to, the following:

a. Surfaces lose original writing and erasing qualities.
b. Surfaces exhibit crazing, cracking, or flaking.

2. Warranty Period: 50 years from date of Substantial Completion.

PART 2 - PRODUCTS

2.1 MATERIALS, GENERAL

A. Porcelain-Enamel Face Sheet: Porcelain-enamel-clad, ASTM A 463/A 463M, Type 1, stretcher-leveled aluminized steel, with 0.024-inch (0.60-mm) uncoated thickness; with porcelain-enamel coating fused to steel at approximately 1000 deg F (538 deg C).

1. Gloss Finish: Low gloss; dry-erase markers wipe clean with dry cloth or standard eraser. Suitable for use as projection screen.

B. Plastic-Impregnated Cork Sheet: Seamless, homogeneous, self-sealing sheet consisting of granulated cork, linseed oil, resin binders, and dry pigments that are mixed and calendared onto fabric backing; with washable vinyl finish and integral color throughout with surface-burning characteristics indicated.

C. Hardboard: ANSI A135.4, tempered.

D. Extruded Aluminum: ASTM B 221 (ASTM B 221M), Alloy 6063.

E. Adhesives: Manufacturer's standard product that complies with the testing and product requirements of the California Department of Health Services' "Standard Practice for the Testing of Volatile Organic Emissions from Various Sources Using Small-Scale Environmental Chambers."

2.2 MARKERBOARD ASSEMBLIES

A. Porcelain-Enamel Markerboards: Magnetic, Balanced, high-pressure, factory-laminated markerboard assembly of three-ply construction consisting of backing sheet, core material, and 0.013-inch- (0.33-mm-) thick, porcelain-enamel face sheet with low-gloss finish.

1. Manufacturers: Subject to compliance with requirements, provide products by one of the following:

a. AARCO Products, Inc.
b. Claridge Products and Equipment, Inc.
c. Marsh Industries, Inc.; Visual Products Group.
d. Platinum Visual Systems; a division of ABC School Equipment, Inc.
e. PolyVision Corporation; a Steelcase company.

2. Manufacturer's Standard Core: Minimum 1/4 inch (6 mm) thick, with manufacturer's standard moisture-barrier backing.
3. Laminating Adhesive: Manufacturer's standard, moisture-resistant thermoplastic type.

2.3 TACKBOARD ASSEMBLIES

A. Manufacturers: Subject to compliance with requirements, provide products by one of the following:
1. AARCO Products, Inc.
2. Claridge Products and Equipment, Inc.
3. Marsh Industries, Inc.; Visual Products Group.
4. Platinum Visual Systems; a division of ABC School Equipment, Inc.

5. PolyVision Corporation; a Steelcase company.

B. Plastic-Impregnated-Cork Tackboard (TB): 1/4-inch- (6-mm-) thick, plastic-impregnated cork sheet factory laminated to 1/4-inch- (6-mm-) thick hardboard backing.

2.4 VISUAL DISPLAY RAILS

A. Manufacturers: Subject to compliance with requirements, provide products by one of the following:

1. AARCO Products, Inc.
2. Claridge Products and Equipment, Inc.
3. Marsh Industries, Inc.; Visual Products Group.
4. Platinum Visual Systems; a division of ABC School Equipment, Inc.
5. PolyVision Corporation; a Steelcase company.

B. General: Manufacturer's standard, aluminum-framed, tackable cork visual display surface fabricated into narrow rail shape and designed for displaying material.

2.5 MARKERBOARD AND TACKBOARD ACCESSORIES

A. Aluminum Frames and Trim: Fabricated from not less than 0.062-inch- (1.57-mm-) thick, extruded aluminum; standard size and shape.
1. Factory-Applied Trim: Manufacturer's standard.

B. Map Rail: Provide the following accessories:

1. Display Rail: Continuous and integral with map rail; fabricated from cork approximately 1 to 2 inches (25 to 50 mm) wide.
2. End Stops: Located at each end of map rail.
3. Map Hooks and Clips: Two map hooks with flexible metal clips for every 48 inches (1219 mm) of map rail or fraction thereof.
4. Flag Holder: One for each room.

2.6 FABRICATION

A. Porcelain-Enamel Visual Display Assemblies: Laminate porcelain-enamel face sheet and backing sheet to core material under heat and pressure with manufacturer's standard flexible, waterproof adhesive.

B. Visual Display Boards: Factory assemble visual display boards unless otherwise indicated.

1. Where factory-applied trim is indicated, trim shall be assembled and attached to visual display boards at manufacturer's factory before shipment.

C. Factory-Assembled Visual Display Units: Coordinate factory-assembled units with trim and accessories indicated. Join parts with a neat, precision fit.

1. Make joints only where total length exceeds maximum manufactured length. Fabricate with minimum number of joints, balanced around center of board, as acceptable to Architect.
2. Provide manufacturer's standard vertical-joint spline system between abutting sections of markerboards.
3. Provide manufacturer's standard mullion trim at joints between markerboards and tackboards of combination units.

4. Where size of visual display boards or other conditions require support in addition to normal trim, provide structural supports or modify trim as indicated or as selected by Architect from manufacturer's standard structural support accessories to suit conditions indicated.

D. Aluminum Frames and Trim: Fabricate units straight and of single lengths, keeping joints to a minimum. Miter corners to a neat, hairline closure.

1. Where factory-applied trim is indicated, trim shall be assembled and attached to visual display units at manufacturer's factory before shipment.

2.7 GENERAL FINISH REQUIREMENTS

A. Comply with NAAMM's "Metal Finishes Manual for Architectural and Metal Products" for recommendations for applying and designating finishes.

B. Protect mechanical finishes on exposed surfaces from damage by applying a strippable, temporary protective covering before shipping.

C. Appearance of Finished Work: Noticeable variations in same piece are not acceptable. Variations in appearance of adjoining components are acceptable if they are within the range of approved Samples and are assembled or installed to minimize contrast.

2.8 ALUMINUM FINISHES

A. Clear Anodic Finish: AAMA 611, AA-M12C22A31, Class II, 0.010 mm or thicker.

PART 3 - EXECUTION

3.1 EXAMINATION

A. Examine substrates and conditions, with Installer present, for compliance with requirements for installation tolerances, surface conditions of wall, and other conditions affecting performance of the Work.

B. Examine walls and partitions for proper preparation and backing for visual display surfaces.

C. Examine walls and partitions for suitable framing depth where sliding visual display units will be installed.

D. Proceed with installation only after unsatisfactory conditions have been corrected.

3.2 PREPARATION

A. Comply with manufacturer's written instructions for surface preparation.

B. Clean substrates of substances that could impair the performance of and affect the smooth, finished surfaces of visual display boards, including dirt, mold, and mildew.

3.3 INSTALLATION, GENERAL

A. General: Install visual display surfaces in locations and at mounting heights indicated on Drawings. Keep perimeter lines straight, level, and plumb. Provide grounds, clips, backing materials, adhesives, brackets, anchors, trim, and accessories necessary for complete installation.

3.4 INSTALLATION OF FACTORY-FABRICATED VISUAL DISPLAY BOARDS AND ASSEMBLIES

A. Visual Display Boards: Attach concealed clips, hangers, and grounds to wall surfaces and to visual display boards with fasteners at not more than 16 inches (400 mm) o.c. Secure both top and bottom of boards to walls.

1. Field-Applied Aluminum Trim: Attach trim over edges of visual display boards and conceal grounds and clips. Attach trim to boards with fasteners at not more than 24 inches (610 mm) o.c.

a. Attach chalktrays to boards with fasteners at not more than 12 inches (300 mm) o.c.

3.5 INSTALLATION OF VISUAL DISPLAY RAILS

A. Display Rails: Install rails in locations and at mounting heights indicated on Drawings. Attach to wall surface with fasteners at not more than 16 inches (400 mm) o.c.

3.6 CLEANING AND PROTECTION

A. Clean visual display surfaces according to manufacturer's written instructions. Attach one cleaning label to visual display surface in each room.

B. Touch up factory-applied finishes to restore damaged or soiled areas.

C. Cover and protect visual display surfaces after installation and cleaning.

END OF SECTION 101100

SECTION 101200 - DISPLAY CASES

PART 1 - GENERAL

1.1 RELATED DOCUMENTS

A. Drawings and general provisions of the Contract, including General and Supplementary Conditions and Division 01 Specification Sections, apply to this Section.

1.2 SUMMARY

A. Section Includes:
   1. Nonilluminated display cases.

B. Related Sections:
   1. Section 101100 "Visual Display Units" for tackboards.

1.3 DEFINITIONS

A. Bulletin Board: Tackable visual display surface or tackboard enclosed in a display case.

B. Display Case: Glazed cabinet with visual display surface background and adjustable shelves.

1.4 PERFORMANCE REQUIREMENTS

A. Thermal Movements: Allow for thermal movements from ambient and surface temperature changes. Base calculations on surface temperatures of materials due to both solar heat gain and nighttime-sky heat loss.

   1. Temperature Change (Range): 120 deg F (67 deg C), ambient; 180 deg F (100 deg C), material surfaces.

1.5 ACTION SUBMITTALS

A. Product Data: For each type of product indicated. Include construction details, material descriptions, dimensions of individual components and profiles, and finishes for display cases.

B. Shop Drawings: For display cases. Include plans, elevations, sections, details, and attachments to other work.

   1. Show location of seams and joints in visual display surfaces.
   2. Include sections of typical trim members.

C. Samples for Initial Selection: For units with factory-applied color finishes, and as follows:

   1. Actual sections of visual display surfaces.

D. Samples for Verification: For each type of product indicated.

1. Visual Display Surface: Not less than 8-1/2 by 11 inches (215 by 280 mm), mounted on substrate indicated for final Work. Include one panel for each type, color, and texture required.
2. Trim: 6-inch- (152-mm-) long sections of each trim profile including corner section.

1.6 CLOSEOUT SUBMITTALS

A. Maintenance Data: For visual display surfaces, operating hardware to include in maintenance manuals.

1.7 QUALITY ASSURANCE

A. Source Limitations: Obtain display cases from single source from single manufacturer.

B. Surface-Burning Characteristics: As determined by testing identical products according to ASTM E 84 by a qualified testing agency. Identify products with appropriate markings of applicable testing agency.

1. Flame-Spread Index: 25 or less.
2. Smoke-Developed Index: 50 or less.

1.8 PROJECT CONDITIONS

A. Environmental Limitations: Do not deliver or install display cases until spaces are enclosed and weathertight, wet work in spaces is complete and dry, work above ceilings is complete, and temporary HVAC system is operating and maintaining ambient temperature and humidity conditions at occupancy levels during the remainder of the construction period.

B. Field Measurements: Verify actual dimensions of openings for display cases by field measurements before fabrication.

PART 2 - PRODUCTS

2.1 MATERIALS

A. Hardboard: ANSI A135.4, tempered.

B. Fiberboard: ASTM C 208.

C. Hardwood Plywood: HPVA HP-1.

D. Plastic-Impregnated Cork Sheet: Seamless, homogeneous, self-sealing sheet consisting of granulated cork, linseed oil, resin binders, and dry pigments that are mixed and calendared onto burlap backing; with washable vinyl finish and integral color throughout.

E. Extruded-Aluminum Bars and Shapes: ASTM B 221 (ASTM B 221M), Alloy 6063.

F. Aluminum Tubing: ASTM B 429, Alloy 6063.

G. Clear Tempered Glass: ASTM C 1048, Kind FT, Condition A, Type I, Class 1, Quality Q3, with exposed edges seamed before tempering, and 6 mm thick unless otherwise indicated.

H. High-Pressure Plastic Laminate: NEMA LD 3.

I. Fasteners: Provide screws, bolts, and other fastening devices made from same material as items being fastened, except provide hot-dip galvanized, stainless-steel, or aluminum fasteners for exterior applications. Provide types, sizes, and lengths to suit installation conditions. Use security fasteners where exposed to view.

J. Adhesives: Manufacturer's standard product that complies with the testing and product requirements of the California Department of Health Services' "Standard Practice for the Testing of Volatile Organic Emissions from Various Sources Using Small-Scale Environmental Chambers."

2.2 TACKBOARD ASSEMBLIES

A. Plastic-Impregnated-Cork Tackboard: 1/4-inch- (6-mm-) thick, plastic-impregnated cork sheet factory laminated to 1/4-inch- (6-mm-) thick hardboard backing.

2.3 DISPLAY CASE (DC-#)

A. Manufacturers: Subject to compliance with requirements, provide products by one of the following:
   1. AARCO Products, Inc.
   2. Claridge Products and Equipment, Inc.
   3. PolyVision Corporation; a Steelcase company.

B. Recessed Cabinet: Factory-fabricated cabinet; with tackboard assembly on back inside surface, operable glazed doors at front, and trim on face to cover edge of recessed opening.

   1. Cabinet Box: Extruded aluminum.
   2. Cabinet Frame and Trim: Aluminum.
   3. Aluminum Finish: Clear anodic.

C. Glazed Sliding Doors: Tempered glass; unframed; with extruded-aluminum top and bottom track; supported on nylon or ball-bearing rollers; with plastic top guide and rubber bumpers. Equip each door with ground finger pull and adjustable cylinder lock with two keys.

   1. Thickness: Not less than 6 mm thick.
   2. Number of Doors: As recommended by Manufacturer.

D. Shelves: 6-mm-thick tempered glass; supported on adjustable shelf standards and supports.

   1. Shelf Width: Minimum 12”, Maximum 18”.
   2. Number of Shelves: As required to provide 12” between shelves within full height of cabinet.

E. Adjustable Shelf Standards and Supports: BHMA A156.9, B04102; with shelf brackets, B04112; recess mounted in rear surface. Provide standards full height of display case.

F. Tack Surface: Plastic-impregnated-cork tackboard assembly.

G. Sizes: See Schedule in Part Three of this Section.

2.4 FABRICATION

A. Fabricate display cases to requirements indicated for dimensions, design, and thickness and finish of materials.

B. Use metals and shapes of thickness and reinforcing to produce flat surfaces, free of oil-canning, and to impart strength for size, design, and application indicated.

C. Fabricate cabinets and door frames with reinforced corners, mitered to a hairline fit, with no exposed fasteners.

D. Fabricate shelf standards plumb and at heights to align shelf brackets for level shelves.

2.5 GENERAL FINISH REQUIREMENTS

A. Comply with NAAMM's "Metal Finishes Manual for Architectural and Metal Products" for recommendations for applying and designating finishes.

B. Protect mechanical finishes on exposed surfaces from damage by applying a strippable, temporary protective covering before shipping.

C. Appearance of Finished Work: Noticeable variations in same piece are not acceptable. Variations in appearance of adjoining components are acceptable if they are within the range of approved Samples and are assembled or installed to minimize contrast.

2.6 ALUMINUM FINISHES

A. Clear Anodic Finish: AAMA 611, AA-M12C22A31, Class II, 0.010 mm or thicker.

PART 3 - EXECUTION

3.1 EXAMINATION

A. Examine walls, with Installer present, for compliance with requirements for installation tolerances, surface conditions of wall, and other conditions affecting performance of the Work.

B. Examine roughing-in for electrical power system to verify actual locations of connections before installation of illuminated units.

C. Examine walls and partitions for proper backing for display cases.

D. Examine walls and partitions for suitable framing depth if recessed units will be installed.

E. Proceed with installation only after unsatisfactory conditions have been corrected.

3.2 PREPARATION

A. Prepare recesses for display cases as required by type and size of unit.

3.3 INSTALLATION

A. General: Install units in locations and at mounting heights indicated on Drawings, or if not indicated, at heights indicated below. Keep perimeter lines straight, level, and plumb. Provide grounds, clips, backing materials, adhesives, brackets, anchors, trim, and accessories necessary for complete installation.

B. Recessed Display Cases: Attach units to wall framing with fasteners at not more than 16 inches (400 mm) o.c. Attach aluminum trim over edges of recessed display cases and conceal grounds and clips. Attach trim with fasteners at not more than 24 inches (600 mm) o.c.

C. Install display case shelving level and straight.

3.4 ADJUSTING AND CLEANING

A. Adjust doors to operate smoothly without warp or bind and so contact points meet accurately. Lubricate operating hardware as recommended by manufacturer.

B. Touch up factory-applied finishes to restore damaged or soiled areas.

3.5 SCHEDULE

A. Display Case DC-1: 5’-0”W x 4’-0”H x 1’-6”D
   1. Locations: (1) at Corridor C100C, (1) at Lobby C100D, (1) at Corridor C200

B. Display Case DC-2: 5’-0”W x 4’-0”H x 1’-0”D
   1. Locations: (1) at Lobby C100D

END OF SECTION 101200

SECTION 101400 - SIGNAGE

PART 1 - GENERAL

1.1 RELATED DOCUMENTS

A. Drawings and general provisions of the Contract, including General and supplementary Conditions and Division-1 Specification Sections, apply to this Section.

1.2 SUMMARY

A. This Section includes the following types of signs:

1. Interior ADA Room Signs.
2. Symbols of Accessibility.
3. Special Signs.
4. Interior Cast Letters.
5. Exterior Cast Letters on building.
6. Miscellaneous signage.

B. Related Sections: The following sections contain requirements that relate to this section:

1. Division 1 "Temporary Facilities and Controls" for temporary project identification signs.
2. Division 10 "Site LED Signs" for messaging signs located elsewhere on site.

1.3 SUBMITTALS

A. General: Submit the following in accordance with Conditions of the Contract and Division 1 Specification Sections.

B. Product Data: Include manufacturer's construction details relative to materials, dimensions of individual components, profiles, and finishes for each type of sign required.

C. Shop Drawings: Provide shop drawings for fabrication and erection of signs. Include plans, elevations, and large-scale sections of typical members and other components. Show anchors, grounds, reinforcement, accessories, layout, and installation details.

1. Provide message list for each sign required, including large-scale details of wording and layout of lettering.

2. For signs supported by or anchored to permanent construction, provide setting drawings, templates, and directions for installation of anchor bolts and other anchors to be installed as a unit of Work in other Sections.

3. Furnish full-size spacing templates for individually mounted dimensional letters and numbers.

D. Samples: Provide the following samples of each sign component for initial selection of color, pattern and surface texture as required and for verification of compliance with requirements indicated.

1. Samples for initial selection of color, pattern, and texture:

a. Cast Acrylic Sheet and Plastic Laminate: Manufacturer's color charts consisting of actual sections of material including the full range of colors available for each material required.

1) Transparent Sheet: Where sheet material is indicated as "clear" provide colorless sheet in matte finish, with light transmittance of 92 percent, when tested in accordance with the requirements of

ASTM D 1003.

b. Aluminum: Samples of each finish type and color, on 6-inch-long sections of extrusions and not less than 4-inch squares of sheet or plate, showing the full range of colors available.

2. Samples for verification of color, pattern, and texture selected, and compliance with requirements indicated:

a. Cast Acrylic Sheet and Plastic Laminate: Provide a sample of each type of sign. Include a sign for each color, texture, and pattern required. On each panel include a representative sample of the graphic image process required, showing graphic style, and colors and finishes of letters, numbers, and other graphic devices.

b. Aluminum: Samples of each finish type and color, on 6-inch-long sections of extrusions and not less than 4-inch squares of sheet or plate. Where finishes involve normal color and texture variations include sample sets showing the full range of variations expected.

c. Dimensional Letters: Provide one full-size representative sample of each dimensional letter type required, showing letter style, color, and material finish and method of attachment.

E. Certification: Provide written certification from the sign manufacturer that signage meets ADA requirements.

1.4 QUALITY ASSURANCE

A. Single-Source Responsibility: For each separate type of sign required, obtain signs from one source from a single manufacturer.

B. Design Criteria: The drawings and specifications indicate size, profiles, and dimensional requirements of signs and are based on the specific type and model indicated. Signs by other manufacturers may be considered provided that deviations in dimensions and profiles are minor and do not change the design concept as judged by the Architect. The burden of proof of equality is on the proposer.

C. Signage must comply with "Americans with Disabilities" (ADA) standards.

1.5 PROJECT CONDITIONS

A. Field Measurements: Take field measurements prior to preparation of shop drawings and fabrication to ensure proper fitting. Show recorded measurements on final shop drawings. Coordinate fabrication schedule with construction progress to avoid delay.

PART 2 - PRODUCTS

2.1 MANUFACTURERS

A. Available Manufacturers" Subject to compliance with requirements, manufacturers offering products that may be incorporated in the work include, but are not limited to, the following:

1. Andco Industries Corp.
2. A.C. Davenport & Son Co.
3. A.S.I. Sign Systems
4. Inter Sign National, Inc.
5. Spanjer Brothers, Inc.
6. The Supersine Company.
7. Southwell Company.
8. Leeds.

B. General Requirements

1. All letters shall be Helvetica Medium, upper case, unless otherwise noted.
2. Letters shall be centered on signs unless otherwise indicated.
3. Panel backgrounds shall be colored from manufacturer's standards with a matte finish.

2.2 MATERIALS

A. Cast Acrylic Sheet: Provide cast (not extruded or continuous cast) methyl methacrylate monomer plastic sheet, in sizes and thicknesses indicated, with a minimum flexural strength of 16,000 psi when tested in accordance with ASTM D 790, a minimum allowable continuous service temperature of 176 deg F (80 deg C), and of the following general types:

1. Transparent Sheet: Where sheet material is indicated as "clear," provide colorless sheet in matte finish, with light transmittance of 92 percent, when tested in accordance with the requirements of ASTM D 1003.

B. Plastic Laminate: Provide high-pressure plastic laminate engraving stock with face and core plies in contrasting colors, in finishes and color combinations indicated or, if not indicated, as selected from the manufacturer's standards.

C. Aluminum Castings: Provide aluminum castings of alloy and temper recommended by the aluminum producer and finisher for the casting process used and for the use and finish indicated.

D. Fasteners: Use concealed fasteners fabricated from metals that are not corrosive to the sign material and mounting surface.

E. Anchors and Inserts: Use nonferrous metal or hot-dipped galvanized anchors and inserts for exterior installations and elsewhere as required for corrosion resistance. Use toothed steel of lead expansion bolt devices for drilled-in-place anchors. Furnish inserts, as required, to be set into concrete or masonry work.

F. Unexposed Solid Wood Frame: Unexposed solid wood may be of any suitable hardwood species, unselect as to grain or color, but free of defects affecting structural soundness. Unexposed wood must be straight, free of surface blemishes, and dimensionally stable.

2.3 ROOM SIGNS

A. Sign Size: Minimum 6″ x 6″.

B. Type: 1/32″ raised letter and numerals on plastic laminate.

C. Letter Size: 5/8” high.

D. Numeral Size: 1¼” high.

E. Locations: Provide new signage identifying each room listed on Finish Schedule at each door, excluding exterior and vestibule doors. Mount at 60” AFF on wall at latch side of door, in accordance with ADA guidelines.

F. Provide type 2 braille plate with room name and number as part of all room signs.

G. Comply with all ADA requirements.

H. Wording on Sign: Text will approximate that which is shown on the finish schedule. Owner will review the shop drawing submittal and advise the Contractor of any revisions.

I. Provide rear blanks at all glass mounted locations.

2.4 SYMBOL OF ACCESSIBILITY

A. Provide 6″x 6″ medium blue plastic laminate square with 6″ international handicapped insignia engraved in white

at all restrooms which are equipped for handicapped use. Mount on wall adjacent to opening as directed by Architect. Top of sign shall be 42″ above finished floor.

2.7 EXTERIOR CAST LETTERS

A. Type: Cast aluminum letters. Provide cast metal letters cast aluminum with baked enamel finish. Furnish cast units with smooth flat faces, sharp corners, true lines and accurate profiles. Provide units free of pits, scale, sand holes, or other defects. Protect exposed surfaces with two coats of clear, non-yellowing lacquer. Provide five-year finish guarantee.

B. Size: As indicated in Calibri font.

C. Location: As shown on drawings at building exterior entrance.

D. Mounting: Provide projecting studs. See drawings for configuration.

E. Representative Manufacturer: Andco Industries Corp.

F. Color: White.

G. Wording and numbering: As designated on elevations.

2.8 MISCELLANEOUS SIGNS

A. Provide as part of Base Bid Work of this section a $3,000.00 allowance for additional signage as directed by Owner/Architect.

PART 3 - EXECUTION

3.1 INSTALLATION

A. General: Locate sign units and accessories where indicated, using mounting methods of the type described and in compliance with the manufacturer's instructions.

1. Install signs level, plumb, and at the height indicated, with sign surfaces free from distortion or other defects in appearance.

2. Attach signs with concealed theft-proof fasteners.

B. Installation of Room Signs:

1. Mount on wall or glass sidelight with top of sign four feet above floor on the latch side of single doors and on the right side when facing double doors from corridor side, unless specifically shown or approved otherwise.

3.2 CLEANING AND PROTECTION

A. At completion of the installation, clean soiled sign surfaces in accordance with the manufacturer's instructions. Repair or replace damaged signs as directed by the Architect. Protect units from damage until acceptance by Owner.

END OF SECTION 101400

SECTION 102113 - TOILET COMPARTMENTS

PART 1 - GENERAL

1.1 RELATED DOCUMENTS

A. Drawings and general provisions of the Contract, including General and Supplementary Conditions and Division 01 Specification Sections, apply to this Section.

1.2 SUMMARY

A. Section Includes:

1. Solid-polymer / solid color reinforced composite toilet compartments configured as toilet enclosures and urinal screens.

1.3 SUBMITTALS

A. Product Data: For each type of product indicated. Include construction details, material descriptions, dimensions of individual components and profiles, and finishes.

B. Shop Drawings: For toilet compartments. Include plans, elevations, sections, details, and attachments to other work.

1. Show locations of cutouts for compartment-mounted toilet accessories.
2. Show locations of reinforcements for compartment-mounted grab bars.
3. Show locations of centerlines of toilet fixtures.

C. Samples for Initial Selection: For each type of unit indicated involving material and color selection.

D. Samples for Verification: For the following products, in manufacturer's standard sizes unless otherwise indicated:

1. Each type of material, color, and finish required for units, prepared on 6-inch- square Samples of same thickness and material indicated for Work.

1.4 QUALITY ASSURANCE

A. Regulatory Requirements: Comply with applicable provisions in the U.S. Architectural & Transportation Barriers Compliance Board's "Americans with Disabilities Act (ADA) and Architectural Barriers Act (ABA) Accessibility Guidelines for Buildings and Facilities" and ICC/ANSI A117.1 for toilet compartments designated as accessible.

1.5 PROJECT CONDITIONS

A. Field Measurements: Verify actual locations of toilet fixtures, walls, columns, ceilings, and other construction contiguous with toilet compartments by field measurements before fabrication.

PART 2 - PRODUCTS

2.1 MATERIALS

A. Aluminum Castings: ASTM B 26/B 26M.

B. Aluminum Extrusions: ASTM B 221.

C. Stainless-Steel Sheet: ASTM A 666, Type 304, stretcher-leveled standard of flatness.

D. Stainless-Steel Castings: ASTM A 743/A 743M.

2.2 SOLID-POLYMER OR SOLID COLOR REINFORCED COMPOSITE UNITS

A. Basis of Design Product: Subject to compliance with requirements, provide Comtec Industries/Capitol Partitions: “Solid Plastic or comparable product by one of the following:

1. Accurate Partitions Corporation “Solid Plastic”
2. Ampco, Inc. “Solid Plastic High Density Polyethylene”
3. Bradley Corporation; Mills Partitions “Bradmar Solid Plastic Series 400 – Sentinel”
4. Global Steel Products Corp. “Polymer”
5. Hadrian Manufacturing Inc. “Solid Plastic”
6. Knickerbocker Partition Corporation. “Pastique SP”
7. Metpar Corp. “Polly SPR”
8. Rockville Partitions Incorporated. “High Density Polymer”
9. Santana Products, Inc. “Solid Plastic”
10. Bobrick Washroom Equipment, Inc. “Sierra Series (Solid Color Reinforced Composite)”

B. Toilet-Enclosure Style: Overhead braced / Floor mounted.

C. Urinal-Screen Style: Wall hung.

D. Door, Panel, and Pilaster Construction: Solid high density polyethylene (HDPE) or polypropylene (PP) panel material, not less than 1 inch thick, seamless, with eased edges, and with homogenous color and pattern throughout thickness of material.

1. Heat-Sink Strip: Manufacturer's standard continuous, stainless-steel strip fastened to exposed bottom edges of solid-polymer components to prevent burning.
2. Color and Pattern: One color and pattern in each room as selected by Architect from manufacturer's full range (all categories).

E. Pilaster Shoes: Manufacturer's standard design; polymer.

1. Polymer Color and Pattern: Matching pilaster.

F. Brackets (Fittings):

1. Full-Height (Continuous) Type: Manufacturer's standard design; polymer.

a. Polymer Color and Pattern: Matching panel.
b. Provide continuous double ear anodized aluminum wall brackets at urinal screens.

2.3 ACCESSORIES

A. Hardware and Accessories: Manufacturer's standard design, heavy-duty operating hardware and accessories.

1. Material: Stainless steel.
2. Hinges: Continuous, cam type that swings to a closed or partially open position.
3. Latch and Keeper: Manufacturer's standard latch unit (provide recessed if available as an option) designed for emergency access and with combination rubber-faced door strike and keeper. Provide units that comply with regulatory requirements for accessibility at compartments designated as accessible.
4. Coat Hook: Manufacturer's standard combination hook and rubber-tipped bumper, sized to prevent in-swinging door from hitting compartment-mounted accessories.
5. Door Bumper: Manufacturer's standard rubber-tipped bumper at out-swinging doors.
6. Door Pull: Manufacturer's standard unit at out-swinging doors that complies with regulatory requirements for accessibility. Provide units on both sides of doors at compartments designated as accessible.

B. Overhead Bracing: Manufacturer's standard continuous, extruded-aluminum head rail with antigrip profile and in manufacturer's standard finish.

C. Anchorages and Fasteners: Manufacturer's standard exposed fasteners of stainless steel with theft-resistant-type heads. Provide sex-type bolts for through-bolt applications. For concealed anchors, use stainless steel.

2.4 FABRICATION

A. Overhead-Braced Units: Provide manufacturer's standard corrosion-resistant supports, leveling mechanism, and anchors at pilasters to suit floor conditions. Provide shoes at pilasters to conceal supports and leveling mechanism.

B. Door Size and Swings: Unless otherwise indicated, provide 24-inch- wide, in-swinging doors for standard toilet compartments and 36-inch- wide, out-swinging doors with a minimum 32-inch- wide, clear opening for compartments designated as accessible.

PART 3 - EXECUTION

3.1 INSTALLATION

A. General: Comply with manufacturer's written installation instructions. Install units rigid, straight, level, and plumb. Secure units in position with manufacturer's recommended anchoring devices.

1. Maximum Clearances:

a. Pilasters and Panels: 1/2 inch.
b. Panels and Walls: 1 inch.

B. Overhead-Braced Units: Secure pilasters to floor and level, plumb, and tighten. Set pilasters with anchors penetrating not less than 1-3/4 inches into structural floor unless otherwise indicated in manufacturer's written instructions. Secure continuous head rail to each pilaster with no fewer than two fasteners. Hang doors to align tops of doors with tops of panels, and adjust so tops of doors are parallel with overhead brace when doors are in closed position.

C. Urinal Screens: Attach with anchoring devices to suit supporting structure. Set units level and plumb, rigid, and secured to resist lateral impact.

3.2 ADJUSTING

A. Hardware Adjustment: Adjust and lubricate hardware according to hardware manufacturer's written instructions for proper operation. Set hinges on in-swinging doors to hold doors open approximately 30 degrees from closed position when unlatched. Set hinges on out-swinging doors to return doors to fully closed position.

END OF SECTION 102113

SECTION 102123 - CUBICLE CURTAINS AND TRACK

PART 1 - GENERAL

1.1 RELATED DOCUMENTS

A. Drawings and general provisions of the Contract, including General and Supplementary Conditions and Division 01 Specification Sections, apply to this Section.

1.2 SUMMARY

A. Section Includes:

1. Curtain tracks and carriers.
2. Cubicle curtains.

B. Related Requirements:

1. Section 092216 "Non-Structural Metal Framing" for supplementary metal framing and blocking for mounting items requiring anchorage.

1.3 ACTION SUBMITTALS

A. Product Data: For each type of product.

1. Include durability, laundry temperature limits, fade resistance, applied curtain treatment, and fire-test-response characteristics for each type of curtain fabric indicated.
2. Include data for each type of track.

B. Shop Drawings:

1. Show layout and types of cubicles, sizes of curtains, number of carriers, anchorage details, and conditions requiring accessories. Indicate dimensions taken from field measurements.
2. Include details on blocking above ceiling.

C. Samples: For each exposed product and for each color and texture specified, 10 inches (254 mm) in size.

D. Samples for Initial Selection: For each type of curtain material indicated.

E. Samples for Verification: For each type of product required, prepared on Samples of size indicated below:

1. Curtain Fabric: 10-inch- (254-mm-) square swatch or larger as required to show complete pattern repeat, from dye lot used for the Work, with specified treatments applied. Mark top and face of material.
2. Mesh Top: Not less than 10 inches (254 mm) square.

F. Curtain and Track Schedule: Use same designations indicated on Drawings.

1.4 CLOSEOUT SUBMITTALS

A. Operation and Maintenance Data: For curtains, track, and hardware to include in operation and maintenance manuals.

PART 2 - PRODUCTS

2.1 PERFORMANCE REQUIREMENTS

A. Curtains: Provide curtain fabrics with the following characteristics:

1. Launderable to a temperature of not less than 160 deg F (71 deg C).
2. Flame resistant and identical to those that have passed NFPA 701 when tested by a testing and inspecting agency acceptable to authorities having jurisdiction.

a. Identify fabrics with appropriate markings of a qualified testing agency.

2.2 CURTAINS AND CURTAIN SUPPORT SYSTEMS

A. Manufacturers: Subject to compliance with requirements, provide products by one of the following:

1. ADC Hospital Equipment; Division of Automatic Devices Company.
2. Alderman Acres Mfg, Inc.
3. Barjan Manufacturing Ltd.
4. Coldraco, Inc.
5. Covoc Corporation.
6. K. N. Crowder Manufacturing, Inc.
7. C/S General Cubicle.
8. Cubicle Curtain Factory, Inc.
9. Diamond Drapery Co.
10. Erwin and Associates, Inc.
11. Hospi-Tel Manufacturing Co.
12. Imperial Fastener Company, Inc.
13. InPro Corporation.
14. A. R. Nelson Co.
15. Pryor Products.
16. Salsbury Industries.
17. Silent Gliss USA Inc.
18. Standard Textile Company, Inc.
19. Tubular Specialties Manufacturing, Inc.

B. Extruded-Aluminum Curtain Track: Not less than 1-1/4 inches wide by 3/4 inch high (32 mm wide by 19 mm high); with 0.062-inch (1.57-mm) minimum wall thickness.

1. Curved Track: Factory-fabricated, 12-inch- (305-mm-) radius bends.
2. Finish: Clear anodized.

C. Curtain Track Accessories: Fabricate splices, end caps, connectors, end stops, coupling and joining sleeves, wall flanges, brackets, ceiling clips, and other accessories from same material and with same finish as track.

D. Curtain Carriers: Two nylon rollers and nylon axle with chrome-plated steel hook.

E. Exposed Fasteners: Stainless steel.

F. Concealed Fasteners: Stainless steel.

G. Cubicle Curtain Fabric: Curtain manufacturer's standard, 100 percent polyester; inherently and permanently flame resistant, stain resistant, and antimicrobial.

1. Products: Subject to compliance with requirements, provide one of the following:

a. INVISTA; Avora FR.
b. Trevira, R-M Schulz Consulting, Inc.; Trevira CS.

2. Pattern: As selected by Architect from manufacturer’s full range.
3. Color: As selected by Architect from manufacturer's full range.

H. Curtain Grommets: Two-piece, rolled-edge, rustproof, nickel-plated brass; spaced not more than 6 inches (152 mm) o.c.; machined into top hem.

I. Mesh Top: Not less than 20-inch- (508-mm-) high mesh top of No. 50 nylon mesh.

J. Curtain Tieback: Nickel-plated brass chain; one at each curtain termination.

2.3 CURTAIN FABRICATION

A. Fabricate curtains as follows:

1. Width: Equal to track length from which curtain is hung plus 10 percent added fullness, but not less than 12 inches (305 mm) added fullness.
2. Length: Equal to floor-to-ceiling height, minus depth of track and carrier at top, and minus clearance above the finished floor as follows:

a. Cubicle Curtains: 15 inches (381 mm).

3. Top Hem: Not less than 1 inch (25.4 mm) and not more than 1-1/2 inches (38 mm) wide, triple thickness, reinforced with integral web, and double lockstitched.
4. Mesh Top: Top hem of mesh not less than 1 inch (25.4 mm) and not more than 1-1/2 inches (38 mm) wide, triple thickness, reinforced with integral web, and double lockstitched. Double lockstitch bottom of mesh directly to 1/2-inch (13-mm) triple thickness, top hem of curtain fabric.
5. Bottom Hem: Not less than 1 inch (25.4 mm) and not more than 1-1/2 inches (38 mm) wide, double thickness and double lockstitched.
6. Side Hems: Not less than 1/2 inch (13 mm) and not more than 1-1/4 inches (32 mm) wide, with double turned edges, and single lockstitched.

B. Vertical Seams: Not less than 1/2 inch (13 mm) wide, double turned and double stitched.

PART 3 - EXECUTION

3.1 EXAMINATION

A. Examine substrates and conditions, with Installer present, for compliance with requirements for installation tolerances and other conditions affecting performance of the Work.

B. Proceed with installation only after unsatisfactory conditions have been corrected.

3.2 INSTALLATION

A. General: Install tracks level and plumb, according to manufacturer's written instructions.

B. Up to 20 feet (6.0 m) in length, provide track fabricated from single, continuous length.

1. Curtain Track Mounting: Surface.

C. Surface-Track Mounting: Fasten tracks to ceilings at intervals recommended by manufacturer. Fasten tracks to structure at each splice and tangent point of each corner. Center fasteners in track to ensure unencumbered carrier operation. Attach track to ceiling as follows:

1. Mechanically fasten directly to bottom of concrete deck with post-installed anchors.
2. Mechanically fasten directly to finished ceiling with toggle bolts.
3. Mechanically fasten to furring through suspended ceiling with screw and tube spacer.
4. Mechanically fasten to suspended ceiling grid with screws.
5. Attach track to suspended ceiling grid with manufacturer's proprietary clip.

D. Track Accessories: Install splices, end caps, connectors, end stops, coupling and joining sleeves, and other accessories as required for a secure and operational installation.

E. Curtain Carriers: Provide curtain carriers adequate for 6-inch (152-mm) spacing along full length of curtain plus an additional carrier.

F. Curtains: Hang curtains on each curtain track. Secure with curtain tieback.

END OF SECTION 102123

SECTION 102239 - FOLDING PANEL PARTITIONS

PART 1 - GENERAL

1.1 RELATED DOCUMENTS

A. Drawings and general provisions of the Contract, including General and Supplementary Conditions and Division 01 Specification Sections, apply to this Section.

1.2 SUMMARY

A. Section Includes:

1. Manually operated, acoustical panel partitions.

B. Related Requirements:

1. Section 055000 "Metal Fabrications" for supports that attach supporting tracks to overhead structural system.

1.3 DEFINITIONS

A. STC: Sound Transmission Class.

1.4 ACTION SUBMITTALS

A. Product Data: For each type of product.

B. Shop Drawings: For operable panel partitions.

1. Include plans, elevations, sections, details, numbered panel installation sequence, and attachments to other work.
2. Indicate stacking and operating clearances. Indicate location and installation requirements for hardware and track, blocking, and direction of travel.

C. Samples for Initial Selection: For each type of exposed material, finish, covering, or facing.

1. Include Samples of accessories involving color selection.

D. Delegated-Design Submittal: For operable panel partitions.

1. Include design calculations for seismic restraints.

1.5 INFORMATIONAL SUBMITTALS

A. Coordination Drawings: Reflected ceiling plans, drawn to scale, on which the following items are shown and coordinated with each other, using input from installers of the items involved:

1. Partition track, track supports and bracing, switches, turning space, and storage layout.
2. Suspended ceiling components.
3. Structural members to which suspension systems are attached.
4. Size and location of initial access modules for acoustical tile.
5. Items penetrating finished ceiling, including the following:

    a. Lighting fixtures.
    b. HVAC ductwork, outlets, and inlets.
    c. Speakers.
    d. Sprinklers.
    e. Smoke detectors.
    f. Access panels.

6. Plenum acoustical barriers.

B. Setting Drawings: For embedded items and cutouts required in other work, including support-beam, mounting-hole template.

C. Sample Warranty: For manufacturer's special warranty.

1.6 CLOSEOUT SUBMITTALS

A. Operation and Maintenance Data: For operable panel partitions to include in maintenance manuals.

1. In addition to items specified in Section 017823 "Operation and Maintenance Data," include the following:

    a. Panel finish facings and finishes for exposed trim and accessories. Include precautions for cleaning materials and methods that could be detrimental to finishes and performance.
    b. Seals, hardware, track, track switches, carriers, and other operating components.
    c. Electric operator and controls.

1.7 MAINTENANCE MATERIAL SUBMITTALS

A. Furnish extra materials, from the same production run, that match products installed and that are packaged with protective covering for storage and identified with labels describing contents.

1. Panel Finish-Facing Material: Furnish full width in quantity to cover both sides of two panels when installed.

1.8 QUALITY ASSURANCE

A. Manufacturer Qualifications: A qualified manufacturer that is certified for chain of custody by an FSC-accredited certification body.

B. Vendor Qualifications: A vendor that is certified for chain of custody by an FSC-accredited certification body.

C. Installer Qualifications: An entity that employs installers and supervisors who are trained and approved by manufacturer.

D. Pre-installation Conference: Conduct conference at Project site.

E. Fire Marshal approval: Do not purchase products prior to approval from local Fire Marshal.

1.9 DELIVERY, STORAGE, AND HANDLING

A. Protectively package and sequence panels in order for installation. Clearly mark packages and panels with numbering system used on Shop Drawings. Do not use permanent markings on panels.

1.10 WARRANTY

A. Special Warranty: Manufacturer agrees to repair or replace components of operable panel partitions that fail in materials or workmanship within specified warranty period.

1. Failures include, but are not limited to, the following:

a. Faulty operation of operable panel partitions.
b. Deterioration of metals, metal finishes, and other materials beyond normal use.

2. Warranty Period: Two years from date of Substantial Completion.

PART 2 - PRODUCTS

2.1 PERFORMANCE REQUIREMENTS

A. Delegated Design: Engage a qualified professional engineer, as defined in Section 014000 "Quality Requirements," to design seismic bracing of tracks to structure above.

B. Acoustical Performance: Provide operable panel partitions tested by a qualified testing agency for the following acoustical properties according to test methods indicated:

1. Sound-Transmission Requirements: Operable panel partition assembly tested for laboratory sound-transmission loss performance according to ASTM E 90, determined by ASTM E 413, and rated for not less than the STC indicated.
2. Noise-Reduction Requirements: Operable panel partition assembly, identical to partition tested for STC, tested for sound-absorption performance according to ASTM C 423, and rated for not less than the NRC indicated.

C. Fire-Test-Response Characteristics: Provide panels with finishes complying with one of the following as determined by testing identical products by UL or another testing and inspecting agency acceptable to authorities having jurisdiction:

1. Surface-Burning Characteristics: Comply with ASTM E 84 or UL 723; testing by a qualified testing agency. Identify products with appropriate markings of applicable testing agency.

a. Flame-Spread Index: 25 or less.
b. Smoke-Developed Index: 450 or less.

2. Fire Growth Contribution: Complying with acceptance criteria of local code and authorities having jurisdiction when tested according to NFPA 265 Method B Protocol.

2.2 OPERABLE ACOUSTICAL PANELS

A. Operable Acoustical Panels: Operable acoustical panel partition system, including panels, seals, finish facing, suspension system, operators, and accessories.

1. Basis of Design Product: Subject to compliance with requirements. Provide Modernfold Acousti-Seal #932 or comparable product by one of the following::

a. Hufcor.
b. Moderco Inc.
c. Modernfold, Inc.; a DORMA Group Company.
d. Panelfold Inc.

B. Panel Operation: Series of paired flat panels hinged together in pairs, manually operated, top supported with operable floor seals.

C. Panel Construction: Provide top reinforcement as required to support panel from suspension components and provide reinforcement for hardware attachment. Fabricate panels with tight hairline joints and concealed fasteners. Fabricate panels so finished in-place partition is rigid; level; plumb; aligned, with tight joints and uniform appearance; and free of bow, warp, twist, deformation, and surface and finish irregularities. All panel horizontal and vertical framing members fabricated from minimum 18-gage formed steel with overlapped and welded corners for rigidity. Top channel is reinforced to support suspension system components. Frame is designed so that full vertical edges of panels are of formed steel and provide concealed protection of the edges of the panel skin.

D. Dimensions: Fabricate operable acoustical panel partitions to form an assembled system of dimensions indicated and verified by field measurements.

1. Panel Width: Forty-eight inch (48”) widths.

E. Acoustics: Meet STC 50 / NIC 42.

F. Panel Skin: Roll-formed steel wrapping around panel edge. Panel skins shall be lock formed and welded directly to the frame for unitized construction.

G. Panel Weight: 8 lb/sq. ft. (40 kg/sq. m) maximum.

H. Panel Thickness: Not less than 3 inches (75 mm).

I. Panel Closure: Horizontally expanding panel edge with removable crank.

J. Hardware: Manufacturer's standard as required to operate operable panel partition and accessories; with decorative, protective finish.

1. Hinges for panels, closure panels: Full leaf butt hinges, attached directly to the panel frame with welded hinge anchor plates within panel to further support hinge mounting to frame. Lifetime warranty on hinges. Hinges mounted into panel edge or vertical astragals are not acceptable.

2.3 SEALS

A. General: Provide seals that produce operable panel partitions complying with performance requirements and the following:

1. Seals fitting tight at contact surfaces and sealing continuously between adjacent panels and between operable panel partition perimeter and adjacent surfaces, when operable panel partition is extended and closed.

B. Vertical Seals: Deep-nesting, interlocking astragals mounted on each edge of panel, with continuous PVC acoustical seal.

C. Horizontal Top Seals: Continuous-contact, extruded-PVC seal exerting uniform constant pressure on track.

D. Horizontal Bottom Seals: PVC-faced, mechanical, retractable, constant-force-contact seal exerting uniform constant pressure on floor when extended, ensuring horizontal and vertical sealing and resisting panel movement.
   1. Automatically Operated for Acoustical Panels: Extension and retraction of bottom seal automatically operated by movement of partition, with operating range not less than 1-1/2 inches (38 mm) between retracted seal and floor finish.

2.4 PANEL FINISH FACINGS

A. General: Provide finish facings for panels that comply with indicated fire-test-response characteristics and that are factory applied to operable panel partitions with appropriate backing, using mildew-resistant nonstaining adhesive as recommended by facing manufacturer's written instructions.

   1. Apply one-piece, seamless facings free of air bubbles, wrinkles, blisters, and other defects, with edges tightly butted, and with no gaps or overlaps. Horizontal butted edges or seams are not permitted. Tightly secure and conceal raw and selvage edges of facing for finished appearance.
   2. Where facings with directional, repeating, or matching grain are indicated, mark facing top and attach facing in same direction.
   3. Match facing pattern 72 inches (1830 mm) above finished floor.

B. Wood Veneer: Laminated to noncombustible core with moisture-resistant adhesive.

   1. Species and Cut: As selected by Architect from manufacturer's full range.
   2. Matching of Adjacent Veneer Leaves: Slip match.
   3. Veneer Matching within Panel Face: Balance match.
   4. Panel-Matching Method: No matching between panels is required. Select and arrange panels for similarity of grain pattern and color between adjacent panels.
   5. Vertical Panel-Matching Method: Panel vertical slip match; panels are slip matched from lower panels to upper panels.
   6. Wood-Veneer Finish: As selected by Architect from manufacturer's full range, as follows:

C. Trimless Edges: Fabricate exposed panel edges so finish facing wraps uninterrupted around panel, covering edge and resulting in an installed partition with facing visible on vertical panel edges, without trim, for minimal sightlines at panel-to-panel joints.

2.5 SUSPENSION SYSTEMS

A. Tracks: Steel or aluminum with adjustable steel hanger rods for overhead support, designed for operation, size, and weight of operable panel partition indicated. Size track to support partition operation and storage without damage to suspension system, operable panel partitions, or adjacent construction. Limit track deflection to no more than 0.10 inch (2.54 mm) between bracket supports. Provide a continuous system of track sections and accessories to accommodate configuration and layout indicated for partition operation and storage.

1. Panel Guide: Aluminum guide on both sides of the track to facilitate straightening of the panels; finished with factory-applied, decorative, protective finish.
2. Head Closure Trim: As required for acoustical performance; with factory-applied, decorative, protective finish.

B. Carriers: Trolley system as required for configuration type, size, and weight of partition and for easy operation; with ball-bearing wheels.

1. Multidirectional Carriers: Capable of negotiating intersections without track switches.

C. Track Intersections, Switches, and Accessories: As required for operation, storage, track configuration, and layout indicated for operable panel partitions, and compatible with partition assembly specified. Fabricate track intersections and switches from steel or aluminum.

D. Aluminum Finish: Mill finish or manufacturer's standard, factory-applied, decorative finish unless otherwise indicated.

E. Steel Finish: Manufacturer's standard, factory-applied, corrosion-resistant, protective coating unless otherwise indicated.

PART 3 - EXECUTION

3.1 EXAMINATION

A. Examine flooring, structural support, and opening, with Installer present, for compliance with requirements for installation tolerances and other conditions affecting performance of operable panel partitions.

B. Proceed with installation only after unsatisfactory conditions have been corrected.

3.2 INSTALLATION

A. General: Comply with ASTM E 557 except as otherwise required by operable panel partition manufacturer's written installation instructions.

B. Install operable panel partitions and accessories after other finishing operations, including painting, have been completed in area of partition installation.

C. Install panels from marked packages in numbered sequence indicated on Shop Drawings.

D. Broken, cracked, chipped, deformed, or unmatched panels are not acceptable.

E. Broken, cracked, deformed, or unmatched gasketing or gasketing with gaps at butted ends is not acceptable.

F. Light-Leakage Test: Illuminate one side of partition installation and observe vertical joints and top and bottom seals for voids. Adjust partitions for alignment and full closure of vertical joints and full closure along top and bottom seals.

3.3 ADJUSTING

A. Adjust operable panel partitions, hardware, and other moving parts to function smoothly, and lubricate as recommended by manufacturer.

B. Verify that safety devices are properly functioning.

3.4 DEMONSTRATION

A. Engage a factory-authorized service representative to train Owner's maintenance personnel to adjust, operate, and maintain operable panel partitions.

END OF SECTION 102239

SECTION 102800 – TOILET, BATH AND LAUNDRY ACCESSORIES

PART 1 - GENERAL

1.1 RELATED DOCUMENTS

A. Drawings and general provisions of the Contract, including General and Supplementary Conditions and Division 1 Specification Sections, apply to this Section.

1.2 SUMMARY

A. This Section includes the following:

1. Toilet and bath accessories.

B. Extent of each type of Toilet Accessories is indicated on drawings and schedules.

C. Related Sections include the following:

1. Division 6 Section “Miscellaneous Rough Carpentry” for blocking at end walls.
2. Division 10 Section "Toilet Compartments” for partitions and screens.
3. Division 22 for pipe protection
4. Division 26 for hand dryers

1.3 SUBMITTALS

A. Product Data: Include construction details, material descriptions and thicknesses, dimensions, profiles, fastening and mounting methods, specified options, and finishes for each type of accessory specified.

B. Setting Drawings: For cutouts required in other work; include templates, substrate preparation instructions, and directions for preparing cutouts and installing anchoring devices.

C. Product Schedule: Indicating types, quantities, sizes, and installation locations by room of each accessory required. Use designations indicated in the Toilet and Bath Accessory Schedule and room designations indicated on Drawings in product schedule.

D. Maintenance Data: For accessories to include in maintenance manuals specified in Division 1. Provide lists of replacement parts and service recommendations.

1.4 QUALITY ASSURANCE

A. Source Limitations: Provide products of same manufacturer for each type of accessory unit and for units exposed to view in same areas, unless otherwise approved by Architect.

B. Product Options: Accessory requirements, including those for materials, finishes, dimensions, capacities, and performance, are established by specific products indicated in the Toilet and Bath Accessory Schedule.

1. Products of other manufacturers listed in Part 2 with equal characteristics, as judged solely by Architect, may be provided.
2. Do not modify aesthetic effects, as judged solely by Architect, except with Architect's approval. Where modifications are proposed, submit comprehensive explanatory data to Architect for review.

1.5 COORDINATION

A. Coordinate accessory locations with other work to prevent interference with clearances required for access by disabled persons, proper installation, adjustment, operation, cleaning, and servicing of accessories.

B. Deliver inserts and anchoring devices set into concrete or masonry as required to prevent delaying the Work. Coordinate requirements and locations for blocking as required.

1.6 WARRANTY

A. General Warranty: Special warranty specified in this Article shall not deprive Owner of other rights Owner may have under other provisions of the Contract Documents and shall be in addition to, and run concurrent with, other warranties made by Contractor under requirements of the Contract Documents.

B. Manufacturer's Mirror Warranty: Written warranty, executed by mirror manufacturer agreeing to replace mirrors that develop visible silver spoilage defects within minimum warranty period indicated.

1. Minimum Warranty Period: 15 years from date of Substantial Completion.

PART 2 - PRODUCTS

2.1 MANUFACTURERS

A. Manufacturers: Subject to compliance with requirements, provide accessories by one of the following:

1. General Toilet and Bath Accessories: (Items on schedule utilize Bobrick Mfg. numbers unless otherwise indicated.)

a. Bobrick Washroom Equipment, Inc.
b. Bradley Corporation.
c. McKinney/Parker Washroom Accessories Corp.

B. Available Products: Subject to compliance with requirements, products that may be incorporated into the Work include, but are not limited to, those indicated in the Toilet and Bath Accessory Schedule on the Drawings.

2.2 MATERIALS

A. Stainless Steel: ASTM A 666, Type 304, with No. 4 finish (satin), in 0.0312-inch (0.8-mm) minimum nominal thickness, unless otherwise indicated.

B. Brass: ASTM B 19, leaded and unleaded flat products; ASTM B 16 (ASTM B 16M), rods, shapes, forgings, and flat products with finished edges; ASTM B 30, castings.

C. Sheet Steel: ASTM A 366/A 366M, cold rolled, commercial quality, 0.0359-inch (0.9-mm) minimum nominal thickness; surface preparation and metal pretreatment as required for applied finish.

D. Galvanized Steel Sheet: ASTM A 653/A 653M, G60 (Z180).

E. Chromium Plating: ASTM B 456, Service Condition Number SC 2 (moderate service), nickel plus chromium electrodeposited on base metal.

F. Baked-Enamel Finish: Factory-applied, gloss-white, baked-acrylic-enamel coating.

G. Mirror Glass: ASTM C 1036, Type I, Class 1, Quality q2, nominal 6.0 mm thick, with silvering, electroplated copper coating, and protective organic coating complying with FS DD-M-411.

H. Galvanized Steel Mounting Devices: ASTM A 153/A 153M, hot-dip galvanized after fabrication.

I. Fasteners: Screws, bolts, and other devices of same material as accessory unit, tamper and theft resistant when exposed, and of galvanized steel when concealed.

2.3 FABRICATION

A. General: One, maximum 1-1/2-inch- (38-mm-) diameter, unobtrusive stamped manufacturer logo, as approved by Architect, is permitted on exposed face of accessories. On interior surface not exposed to view or back surface of each accessory, provide printed, waterproof label or stamped nameplate indicating manufacturer's name and product model number.

B. General: Names or labels are not permitted on exposed faces of accessories. On interior surface not exposed to view or on back surface of each accessory, provide printed, waterproof label or stamped nameplate indicating manufacturer's name and product model number.

C. Surface-Mounted Toilet Accessories: Unless otherwise indicated, fabricate units with tight seams and joints, and exposed edges rolled. Hang doors and access panels with continuous stainless-steel hinge. Provide concealed anchorage where possible.

D. Recessed Toilet Accessories: Unless otherwise indicated, fabricate units of all-welded construction, without mitered corners. Hang doors and access panels with full-length, stainless-steel hinge. Provide anchorage that is fully concealed when unit is closed.

E. Framed Glass-Mirror Units: Fabricate frames for glass-mirror units to accommodate glass edge protection material. Provide mirror backing and support system that permits rigid, tamper-resistant glass installation and prevents moisture accumulation.

1. Provide galvanized steel backing sheet, not less than 0.034 inch (0.85 mm) and full mirror size, with nonabsorptive filler material. Corrugated cardboard is not an acceptable filler material.

F. Mirror-Unit Hangers: Provide mirror-unit mounting system that permits rigid, tamper- and theft-resistant installation, as follows:

1. One-piece, galvanized steel, wall-hanger device with spring-action locking mechanism to hold mirror unit in position with no exposed screws or bolts.
2. Heavy-duty wall brackets of galvanized steel, equipped with concealed locking devices requiring a special tool to remove.

G. Keys: Provide universal keys throughout Project for internal access to accessories for servicing and resupplying. Provide minimum of twelve keys to Owner's representative.

PART 3 - EXECUTION

3.1 INSTALLATION

A. Install accessories according to manufacturers' written instructions, using fasteners appropriate to substrate indicated and recommended by unit manufacturer. Install units level, plumb, and firmly anchored in locations and at heights indicated.

B. Secure mirrors to walls in concealed, tamper-resistant manner with special hangers, toggle bolts, or screws. Set units level, plumb, and square at locations indicated, according to manufacturer's written instructions for substrate indicated.

C. Install grab bars to withstand a downward load of at least 250 lbf (1112 N), when tested according to method in ASTM F 446.

3.2 ADJUSTING AND CLEANING

A. Adjust accessories for unencumbered, smooth operation and verify that mechanisms function properly. Replace damaged or defective items.

B. Remove temporary labels and protective coatings.

C. Clean and polish exposed surfaces according to manufacturer's written recommendations.

3.3 TOILET AND BATH ACCESSORY SCHEDULE

A. See Plans for locations and types.

1. Confirm exact location with the Owner.

END OF SECTION 102800

SECTION 104161 – SITE LED SIGNS

PART 1 - GENERAL

1.1 RELATED DOCUMENTS

A. Drawings and general provisions of Contract, including General and Supplementary Conditions and Division-1 Specification sections, apply to work of this section.

1.2 SUMMARY

A. This Section includes the following:

1. New Site LED messaging sign on masonry support.

B. Related Sections include the following:

1. Division 26 for electric service and connections.
2. Division 27 for communications.

1.3 SUBMITTALS

A. Product Data: For each model indicated. Include details of construction relative to materials, dimensions of individual components, profiles, and finishes.

B. Shop Drawings: For each type of sign required.

1. Include dimensioned plans, elevations and details, large-scale sections of typical members, and other components. Show anchors, grounds, reinforcement and layout, and indicate finishes.

2. Include setting drawings, templates, and directions for installing anchor bolts and other anchorages to be installed as a unit of Work in other Sections.

3. Wiring diagrams from manufacturer for sign.

C. Samples for Initial Selection: Manufacturer's color charts showing the full range of colors and textures available for the following:

1.4 QUALITY ASSURANCE

A. Installer Qualifications: Engage an experienced installer who is an authorized representative of the LED sign manufacturer for installation and maintenance of units required for this Project.

B. Source Limitations: Obtain sign components through one source from a single manufacturer.

C. Product Options: Size, profiles, and dimensional requirements of signs are based on the specific model indicated. Other manufacturers' signs with equal performance characteristics may be considered. Refer to Division 1 Section "Substitutions."

D. Do not modify intended aesthetic effects, as judged solely by Architect, except with Architect's approval and only to the extent needed to comply with performance requirements. Where modifications are proposed, submit comprehensive explanatory data to Architect for review.

E. Listing and Labeling: Provide electrically operated fixtures specified in this Section that are listed and labeled.

1. The Terms “Listed” and “Labeled”: As defined in the National Electrical code, Article 100.

1.5 PROJECT CONDITIONS

A. Field Measurements: Verify rough openings for signs by field measurements before fabrication and indicate measurements on Shop Drawings. Coordinate fabrication schedule with construction progress to avoid delaying the Work.

B. Established Dimensions: Where field measurements cannot be made without delaying the Work, establish opening dimensions and proceed with fabricating signs without field measurements. Coordinate wall construction to ensure actual opening dimensions correspond to established dimensions.

PART 2 - PRODUCTS

2.1 MANUFACTURERS

A. Available Manufacturers: Subject to compliance with requirements provide 32”x 128” DayStar by Stewart Signs or a comparable product from a manufacturer approved prior to bidding.

2.2 MATERIALS

A. Aluminum Extrusions: Manufacturer’s standard extruded-aluminum sections with not less than the strength and durability properties specified in ASTM B 221 (ASTM B 221M) for 6063-T5 alloy.

B. Clear Float Glass: ASTM C 1036 Type I (transparent glass, flat), Class 1 (clear), Quality q3 (glazing select), 6 mm thick, unless otherwise indicated.

2.3 DOUBLE-FACED LED SIGNS

A. LED Cabinets: Provide protection of internal electronic components. Each cabinet is NEMA 4X style. Internal temperature is controlled with cooling fans and heating bars, Surge protection built into both the power input as well as the data input.

B. LED Vandal Covers: Provide protection from vandalism, graffiti and UV damage by a polycarbonate matte finish vandal cover.

C. Versatile Displays: Double-sided LED displays allowing different messages to be shown on each side. Scheduling software to allow display of messages at certain times, up to a year in advance! All messages and schedules to be stored onboard the sign.

D. Video & Graphics Capabilities: Provide capability to text as well as display video clips, animations and still images. Provide full-color shaded display.

E. Time & Temperature: date and temperature can be displayed at any point and embedded with your own text or graphics. Temperature is derived from the included temperature probe attached to the sign. Time and date are derived from the internal clock with battery, and does not have to be reset in the event of a power-outage.

F. Adjustable Brightness & Scheduled Dimming: Provide capability to automatically or manually set brightness. A light meter on each side of a double-sided sign allows their brightness to be adjusted individually; an important consideration for signs facing East and West. If using the manual setting, different brightness levels can be set for daytime and nighttime use. Your display can even be set to turn off and back on at certain times.

G. Graphics Library: Provide unlimited lifetime access to manufacturer's LED Graphics Library.

H. Security: Provide password-protected software with a "bad word checker" that will block offensive words in the event that the password is compromised.

I. Communications Method: Wired.

2.4 FABRICATION

A. General: Fabricate signs to requirements indicated, including dimensions, design, and thickness and finish of materials. Use metals and shapes of thickness, with reinforcing if needed, to produce flatness, free of oil canning, and to impart strength for size, design, and application indicated.

B. Fabricate perimeter cabinet and cover frames with reinforced corners, mitered to a hairline fit, with no exposed fasteners.

C. Hardware for Covers: Equip covers with hardware of type indicated.

2.5 FINISHES

A. General: Comply with NAAMM's "Metal Finishes Manual for Architectural and Metal Products" for recommendations relative to applying and designating finishes.

B. Colors: Provide colors as selected by Architect from manufacturer's full range of colors.

C. Finish designations prefixed by AA conform to the system established by the Aluminum Association for designating aluminum finishes.

D. Class II, Clear Anodic Finish: AA-M12C22A31 (Mechanical Finish: nonspecular as fabricated; Chemical Finish: etched, medium matte; Anodic Coating: Architectural Class II, clear coating 0.010 mm or thicker) complying with AAMA 607.1.

PART 3 - EXECUTION

3.1 EXAMINATION

A. Examine masonry support, with the Installer present, for compliance with requirements and other conditions affecting installation of directory.

B. Do not proceed with installation until unsatisfactory conditions have been corrected.

3.2 INSTALLATION

A. Install units plumb and level, in locations and with mountings shown. Securely attach to supporting structure with concealed fasteners, according to manufacturer's written installation instructions.

3.3 CLEANING AND PROTECTING

A. At completion of installation, clean surfaces according to manufacturer's written instructions.

B. Protect installed signs from damage until acceptance by Owner at the time of Substantial Completion.

END OF SECTION 104160

SECTION 104200 - PLAQUES

PART 1 - GENERAL

1.1 RELATED DOCUMENTS

A. Drawings and general provisions of Contract, including General and Supplementary Conditions and Division 1 Specification sections, apply to work of this section.

1.2 DESCRIPTION OF WORK

A. Work includes furnishing one plaque and all required accessories.

B. Related work not included in this Section consists of:

1. Installation of plaques is part of Section 061000.

1.3 SUBMITTALS

A. Submit shop drawings for initial approval.

B. Submit rubbing of final plaque for final approval before casting.

C. Submit complete catalogs and specifications of approved equal.

PART 2 - MATERIALS

2.1 GENERAL

A. Equivalent to the Southwell Company, San Antonio, Texas 78291.

B. Approved equivalents:

1. Spanjer Brothers, Inc., Parsippany, New Jersey.
2. United States Bronze Sign Co., Inc., New York, New York.
3. James H. Matthews & Company, Pittsburgh, Pennsylvania.

C. Specified items and requirements are for Southwell plaques and letters.

2.2 PLAQUES

A. Type: Bronze, 85-5-5-5 standard U.S. bronze alloy.

B. Sizes:
1) 18” W x 24” H each.

C. Background: Stippled and oxidized.

D. Border and Face: Raised letters, satin finish.

E. Border: Single line.

F. Letter Style: Ribbon.

G. Custom Logos: Manufacturer will pay all costs attributed to production of graphics necessary, including conversion of graphic found at the end of this section to a vector image.

H. Mounting: Concealed, on masonry.

I. Quantity: One.

J. Locations: As designated on drawings.

PART 3 - EXECUTION

3.1 GENERAL

A. According to manufacturer's printed instruction.

B. Should it be decided to erect plaques before final completion of building, Contractor shall box-in plaques to protect from damage. Remove before final inspection.

C. Persons named on enclosed samples shall be checked by Contractor with the Architect prior to initial sample submission of the sign samples in order to verify persons so named are still maintaining said state and local office positions following most recent elections.

3.2 LAYOUT: EXAMPLE OF INFORMATION FOLLOWS THIS SECTION.

END OF SECTION 104200

SECTION 104413 - FIRE EXTINGUISHER AND DEFIBRILLATOR CABINETS

PART 1 - GENERAL

1.1 RELATED DOCUMENTS

A. Drawings and general provisions of the Contract, including General and Supplementary Conditions and Division 01 Specification Sections, apply to this Section.

1.2 SUMMARY

A. Section Includes:

1. Fire protection cabinets for the following:

a. Portable fire extinguishers.

2. Defibrillator Cabinets

B. Related Sections:

1. Division 10 Section "Fire Extinguishers."

1.3 ACTION SUBMITTALS

A. Product Data: For each type of product indicated. Include construction details, material descriptions, dimensions of individual components and profiles, and finishes for fire protection cabinets.

1. Fire Protection Cabinets: Include roughing-in dimensions, details showing mounting methods, relationships of box and trim to surrounding construction, door hardware, cabinet type, trim style, and panel style.

B. Shop Drawings: For fire protection cabinets. Include plans, elevations, sections, details, and attachments to other work.

C. Product Schedule: For fire protection cabinets. Coordinate final fire protection cabinet schedule with fire extinguisher schedule to ensure proper fit and function. Use same designations indicated on Drawings.

1.4 CLOSEOUT SUBMITTALS

A. Maintenance Data: For fire protection cabinets to include in maintenance manuals.

1.5 QUALITY ASSURANCE

A. Fire-Rated, Fire Protection Cabinets: Listed and labeled to comply with requirements in ASTM E 814 for fire-resistance rating of walls where they are installed.

1.6 COORDINATION

A. Coordinate size of fire protection cabinets to ensure that type and capacity of fire extinguishers indicated are accommodated.

B. Coordinate sizes and locations of fire protection cabinets with wall depths.

PART 2 - PRODUCTS

2.1 MATERIALS

A. Stainless-Steel Sheet: ASTM A 666, Type 304.

B. Cold-Rolled Steel Sheet: ASTM A 1008/A 1008M, Commercial Steel (CS), Type B.

C. Tempered Float Glass: ASTM C 1048, Kind FT, Condition A, Type I, Quality q3, 3 mm thick, Class 1 (clear).

2.2 FIRE PROTECTION CABINET **(FEC):**

A. Cabinet Type: Suitable for fire extinguisher.

1. Products: Subject to compliance with requirements, provide one of the following:

a. J. L. Industries, Inc., a division of Activar Construction Products Group; Cosmopolitan Stainless Steel FX
b. Larsen's Manufacturing Company; Architectural Fire Rated
c. Potter Roemer LLC; FRC 1780 Series.

B. Cabinet Construction: 1-hour fire rated.

1. Fire-Rated Cabinets: Construct fire-rated cabinets with double walls fabricated from 0.0428-inch- (1.1-mm-) thick, cold-rolled steel sheet lined with minimum 5/8-inch- (16-mm-) thick, fire-barrier material. Provide factory-drilled mounting holes.
2. Stainless Steel Tub

C. Cabinet Material: Stainless-steel sheet.

D. Semirecessed Cabinet: Cabinet box partially recessed in walls of sufficient depth to suit style of trim indicated; with one-piece combination trim and perimeter door frame overlapping surrounding wall surface with exposed trim face and wall return at outer edge (backbend). Provide where walls are of insufficient depth for recessed cabinets but are of sufficient depth to accommodate semirecessed cabinet installation.

1. Square-Edge Trim: 1-1/4- to 1-1/2-inch (32- to 38-mm) backbend depth.

E. Cabinet Trim Material: Stainless-steel sheet.

F. Door Material: Stainless-steel sheet.

G. Door Style: Vertical Duo with SAF-T-LOK

H. Door Glazing: Laminated Safety.

I. Door Hardware: Manufacturer's standard door-operating hardware of proper type for cabinet type, trim style, and door material and style indicated.

1. Provide continuous hinge, of same material and finish as trim, permitting door to open 180 degrees.

J. Accessories:

1. Mounting Bracket: Manufacturer's standard steel, designed to secure fire extinguisher to fire protection cabinet, of sizes required for types and capacities of fire extinguishers indicated, with plated or baked-enamel finish.
2. Lettered Door Handle: One-piece, cast-iron door handle with the word "FIRE" embossed into face.
3. Identification: Lettering complying with authorities having jurisdiction for letter style, size, spacing, and location. Locate as indicated.

    a. Identify fire extinguisher in fire protection cabinet with the words "FIRE EXTINGUISHER."

        1) Location: Applied to cabinet door.
        2) Application Process: Etched.
        3) Lettering Color: Black.
        4) Orientation: Vertical.

K. Finishes:

1. Stainless Steel: No. 4.

2.3 AUTOMATIC EXTERNAL DEFIBRILLATOR CABINET (AED)

A. Basis-of-Design: Subject to compliance with requirements, provide the following:

1. Cabinet: JL Industries, Inc., Metal AED Cabinet #1413.
    a. Quantity: 2
    b. Locations to be determined by owner

2. Product substitutions shall be made during the bidding period according to the requirements specified in “Material and Equipment.”

B. Mounting: Surface Mounted.

C. Accessories: Provide manufacturer’s standard battery pack with standby life of not less than seven years, two sets of defibrillation pads, emergency instruction card, and all other equipment required for proper use and maintenance.

2.4 FABRICATION

A. Fire Protection Cabinets: Provide manufacturer's standard box (tub) with trim, frame, door, and hardware to suit cabinet type, trim style, and door style indicated.

1. Weld joints and grind smooth.
2. Provide factory-drilled mounting holes.
3. Prepare doors and frames to receive locks.

B. Cabinet Doors: Fabricate doors according to manufacturer's standards, from materials indicated and coordinated with cabinet types and trim styles selected.

1. Fabricate door frames with tubular stiles and rails and hollow-metal design, minimum 1/2 inch (13 mm) thick.
2. Miter and weld perimeter door frames.

C. Cabinet Trim: Fabricate cabinet trim in one piece with corners mitered, welded, and ground smooth.

2.5 GENERAL FINISH REQUIREMENTS

A. Comply with NAAMM's "Metal Finishes Manual for Architectural and Metal Products" for recommendations for applying and designating finishes.

B. Protect mechanical finishes on exposed surfaces of fire protection cabinets from damage by applying a strippable, temporary protective covering before shipping.

C. Finish fire protection cabinets after assembly.

D. Appearance of Finished Work: Noticeable variations in same piece are not acceptable. Variations in appearance of adjoining components are acceptable if they are within the range of approved Samples and are assembled or installed to minimize contrast.

2.6 STAINLESS-STEEL FINISHES

A. Surface Preparation: Remove tool and die marks and stretch lines, or blend into finish.

B. Polished Finishes: Grind and polish surfaces to produce uniform finish, free of cross scratches.

1. Run grain of directional finishes with long dimension of each piece.
2. When polishing is completed, passivate and rinse surfaces. Remove embedded foreign matter and leave surfaces chemically clean.
3. Directional Satin Finish: No. 4.

PART 3 - EXECUTION

3.1 EXAMINATION

A. Examine walls and partitions for suitable framing depth and blocking where semirecessed cabinets will be installed.

B. Proceed with installation only after unsatisfactory conditions have been corrected.

3.2 PREPARATION

A. Prepare recesses for semirecessed fire protection cabinets as required by type and size of cabinet and trim style.

3.3 INSTALLATION

A. General: Install fire protection cabinets in locations and at mounting heights indicated or, if not indicated, at heights indicated below:

1. Fire Protection Cabinets: 54 inches (1372 mm) above finished floor to top of cabinet.

B. Fire Protection Cabinets: Fasten cabinets to structure, square and plumb.

1. Unless otherwise indicated, provide recessed fire protection cabinets. If wall thickness is not adequate for recessed cabinets, provide semirecessed fire protection cabinets.
2. Fasten mounting brackets to inside surface of fire protection cabinets, square and plumb.

3.4 ADJUSTING AND CLEANING

A. Remove temporary protective coverings and strippable films, if any, as fire protection cabinets are installed unless otherwise indicated in manufacturers written installation instructions.

B. Adjust fire protection cabinet doors to operate easily without binding. Verify that integral locking devices operate properly.

C. On completion of fire protection cabinet installation, clean interior and exterior surfaces as recommended by manufacturer.

D. Touch up marred finishes, or replace fire protection cabinets that cannot be restored to factory-finished appearance. Use only materials and procedures recommended or furnished by fire protection cabinet and mounting bracket manufacturers.

E. Replace fire protection cabinets that have been damaged or have deteriorated beyond successful repair by finish touchup or similar minor repair procedures.

END OF SECTION 104413

SECTION 104416 - FIRE EXTINGUISHERS

PART 1 - GENERAL

1.1 RELATED DOCUMENTS

A. Drawings and general provisions of the Contract, including General and Supplementary Conditions and Division 01 Specification Sections, apply to this Section.

1.2 SUMMARY

A. Section includes portable, hand-carried fire extinguishers and mounting brackets for fire extinguishers.

B. Related Sections:

1. Division 10 Section "Fire Extinguisher Cabinets."

1.3 ACTION SUBMITTALS

A. Product Data: For each type of product indicated. Include rating and classification, material descriptions, dimensions of individual components and profiles, and finishes for fire extinguisher and mounting brackets.

B. Product Schedule: For fire extinguishers. Coordinate final fire extinguisher schedule with fire protection cabinet schedule to ensure proper fit and function. Use same designations indicated on Drawings.

1.4 INFORMATIONAL SUBMITTALS

A. Warranty: Sample of special warranty.

1.5 CLOSEOUT SUBMITTALS

A. Operation and Maintenance Data: For fire extinguishers to include in maintenance manuals.

1.6 QUALITY ASSURANCE

A. NFPA Compliance: Fabricate and label fire extinguishers to comply with NFPA 10, "Portable Fire Extinguishers."

B. Fire Extinguishers: Listed and labeled for type, rating, and classification by an independent testing agency acceptable to authorities having jurisdiction.

1.7 COORDINATION

A. Coordinate type and capacity of fire extinguishers with fire protection cabinets to ensure fit and function.

1.8 WARRANTY

A. Special Warranty: Manufacturer's standard form in which manufacturer agrees to repair or replace fire extinguishers that fail in materials or workmanship within specified warranty period.

1. Failures include, but are not limited to, the following:

a. Failure of hydrostatic test according to NFPA 10.
b. Faulty operation of valves or release levers.

2. Warranty Period: Six years from date of Substantial Completion.

PART 2 - PRODUCTS

2.1 PORTABLE, HAND-CARRIED FIRE EXTINGUISHERS

A. Fire Extinguishers: Type, size, and capacity for each fire protection cabinet and mounting bracket indicated.

1. Basis-of-Design Product: Subject to compliance with requirements, provide J.L. Industries – Cosmic 10E or comparable product by one of the following:

a. Larsen's Manufacturing Company.
b. Potter Roemer LLC.

2. Valves: Manufacturer's standard.
3. Handles and Levers: Manufacturer's standard.
4. Instruction Labels: Include pictorial marking system complying with NFPA 10, Appendix B.

B. Multipurpose Dry-Chemical Type in Steel Container (FE) & (FEC): UL-rated 4-A:60-B:C, 10-lb (4.5-kg) nominal capacity, with monoammonium phosphate-based dry chemical in enameled-steel container.

2.2 MOUNTING BRACKETS (FE):

A. Mounting Brackets: Manufacturer's standard steel, designed to secure fire extinguisher to wall or structure, of sizes required for types and capacities of fire extinguishers indicated, with plated or red baked-enamel finish.

1. Basis-of-Design Product: Subject to compliance with requirements, provide J.L. Industries, Inc. – MB846C or comparable product by one of the following:

a. Larsen's Manufacturing Company.
b. Potter Roemer LLC.

PART 3 - EXECUTION

3.1 EXAMINATION

A. Examine fire extinguishers for proper charging and tagging.

1. Remove and replace damaged, defective, or undercharged fire extinguishers.

B. Proceed with installation only after unsatisfactory conditions have been corrected.

3.2 INSTALLATION

A. General: Install fire extinguishers and mounting brackets in locations indicated and in compliance with requirements of authorities having jurisdiction.

1. Mounting Brackets: 54 inches (1372 mm) above finished floor to top of fire extinguisher.

B. Mounting Brackets: Fasten mounting brackets to surfaces, square and plumb, at locations indicated.

END OF SECTION 104416

SECTION 105113 - METAL LOCKERS

PART 1 - GENERAL

1.1 RELATED DOCUMENTS

A. Drawings and general provisions of the Contract, including General and Supplementary Conditions and Division 01 Specification Sections, apply to this Section.

1.2 SUMMARY

A. Section Includes:

1. Standard metal lockers.

1.3 SUBMITTALS

A. Product Data: For each type of product indicated. Include construction details, material descriptions, dimensions of individual components and profiles, and finishes for each type of metal locker and bench.

B. Shop Drawings: For metal lockers. Include plans, elevations, sections, details, and attachments to other work.

1. Show locker trim and accessories.
2. Include locker identification system and numbering sequence.

C. Qualification Data: For qualified Installer.

D. Maintenance Data: For adjusting, repairing, and replacing locker doors and latching mechanisms to include in maintenance manuals.

E. Warranty: Sample of special warranty.

1.4 QUALITY ASSURANCE

A. Installer Qualifications: Manufacturer's authorized representative who is trained and approved for installation of units required for this Project.

B. Source Limitations: Obtain metal lockers, locker benches, and accessories from single source from single manufacturer.

C. Regulatory Requirements: Where metal lockers and benches are indicated to comply with accessibility requirements, comply with the U.S. Architectural & Transportation Barriers Compliance Board's "Americans with Disabilities Act (ADA) and Architectural Barriers Act (ABA) Accessibility Guidelines for Buildings and Facilities" and ICC/ANSI A117.1.

1.5 DELIVERY, STORAGE, AND HANDLING

A. Do not deliver metal lockers until spaces to receive them are clean, dry, and ready for their installation.

B. Deliver combination control charts to Owner by registered mail or overnight package service.

1.6 PROJECT CONDITIONS

A. Field Measurements: Verify actual dimensions of recessed openings by field measurements before fabrication.

1.7 COORDINATION

A. Coordinate sizes and locations of concrete bases for metal lockers.

B. Coordinate sizes and locations of framing, blocking, furring, reinforcements, and other related units of work specified in other Sections to ensure that metal lockers can be supported and installed as indicated.

1.8 WARRANTY

A. Special Warranty: Manufacturer's standard form in which manufacturer agrees to repair or replace components of metal lockers that fail in materials or workmanship, excluding finish, within specified warranty period.

1. Failures include, but are not limited to, the following:

a. Structural failures.
b. Faulty operation of latches and other door hardware.

2. Damage from deliberate destruction and vandalism is excluded.
3. Warranty Period for Knocked-Down Metal Lockers: Two years from date of Substantial Completion.

1.9 EXTRA MATERIALS

A. Furnish extra materials that match products installed and that are packaged with protective covering for storage and identified with labels describing contents.

1. Full-size units of the following metal locker hardware items equal to 10 percent of amount installed for each type and finish installed, but no fewer than five units:

a. Identification plates.
b. Hooks.

PART 2 - PRODUCTS

2.1 MATERIALS

A. Cold-Rolled Steel Sheet: ASTM A 1008/A 1008M, Commercial Steel (CS), Type B, suitable for exposed applications.

B. Metallic-Coated Steel Sheet: ASTM A 653/A 653M, Commercial Steel (CS), Type B; with A60 (ZF180) zinc-iron, alloy (galvannealed) coating designation.

C. Stainless-Steel Sheet: ASTM A 666, Type 304.

D. Plastic Laminate: NEMA LD 3, Grade HGP.

E. Extruded Aluminum: ASTM B 221 (ASTM B 221M), alloy and temper recommended by aluminum producer and manufacturer for type of use and finish indicated.

F. Steel Tube: ASTM A 500, cold rolled.

G. Particleboard: ANSI A208.1, Grade M-2.

H. Fasteners: Zinc- or nickel-plated steel, slotless-type, exposed bolt heads; with self-locking nuts or lock washers for nuts on moving parts.

I. Anchors: Material, type, and size required for secure anchorage to each substrate.

1. Provide nonferrous-metal or hot-dip galvanized anchors and inserts on inside face of exterior walls, and elsewhere as indicated, for corrosion resistance.
2. Provide toothed-steel or lead expansion sleeves for drilled-in-place anchors.

2.2 STANDARD METAL LOCKERS

A. Basis-of-Design Product: Subject to compliance with requirements, provide Guardian Plus Lockers by Penco Products, Inc. or comparable product by one of the following:

1. Republic Storage Systems Company.
2. Art Metal Products.
3. Hadrian Products, Inc.
4. Keystone Locker Company.

B. Locker Arrangement: Single tier, Double tier

1. See Schedule at end of this specification for sizes.

C. Material: Cold-rolled Metallic-coated steel sheet.

D. Body: Assembled by riveting or bolting body components together. Fabricate from unperforated steel sheet as follows:

1. Tops, Bottoms, and Intermediate Dividers: 0.024-inch nominal thickness, with single bend at sides.
2. Backs and Sides: 0.024-inch nominal thickness, with full-height, double-flanged connections.
3. Shelves: 0.024-inch nominal thickness, with double bend at front and single bend at sides and back.

E. Frames: Channel formed; fabricated from 0.060-inch nominal-thickness steel sheet; lapped and factory welded at corners; with top and bottom main frames factory welded into vertical main frames. Form continuous, integral door strike full height on vertical main frames.

1. Cross Frames between Tiers: Channel formed and fabricated from same material as main frames; welded to vertical main frames.
2. Frame Vents: Fabricate face frames with vents.

F. Doors: One piece; shall consist of 20 gauge over panel welded to form into channel shape with double bend at vertical edges and with right-angle single bend at horizontal edges.

1. Doors 24 inner panel.
2. Doors for box lockers less than 15 inches wide may be fabricated from 0.048-inch nominal-thickness steel sheet.
3. Reinforcement: Manufacturer's standard reinforcing angles, channels, or stiffeners for doors more than 15 inches wide; welded to inner face of doors.
4. Stiffeners: Manufacturer's standard full-height stiffener fabricated from 0.048-inch nominal-thickness steel sheet; welded to inner face of doors.
5. Sound-Dampening Panels: Manufacturer's standard, designed to stiffen doors and reduce sound levels when doors are closed, of die-formed metal with full perimeter flange and sound-dampening material; welded to inner face of doors.
6. Door Style: Unperforated panel.

G. Hinges: Welded to door and attached to door frame with no fewer than two factory-installed rivets per hinge that are completely concealed and tamper resistant when door is closed; fabricated to swing 180 degrees; self-closing.

1. Continuous Hinges: Manufacturer's standard, steel, full height.

H. Recessed Door Handle and Latch: Manufacturer’s standard housing, formed from 0.0359 inch (0.90 mm) thick nickel-plated steel or stainless steel, with integral door pull, recessed for latch lifter and locking devices; non-protruding latch lifter; and automatic, pre-locking, pry-resistant latch, as follows:

1. Provide minimum three-point latching for each door more than 42 inches (1067 mm) high; minimum two-point latching for each door 42 inches (1067 mm) high or less.

a. Provide strike and eye for padlock.

I. Equipment: Equip each metal locker with identification plate and the following unless otherwise indicated:

1. Single-Tier Units: Shelf, one double-prong ceiling hook, and two single-prong wall hooks.
2. Double-Tier Units: One double-prong ceiling hook and two single-prong wall hooks.

J. Continuous Zee Base: Fabricated from 0.075-inch (1.90-mm) nominal-thickness steel sheet.

1. Height: 4 inches (102 mm).
2.

K. Accessories:

1. Recess Trim: Fabricated from 0.048-inch nominal-thickness steel sheet.
2. Filler Panels: Fabricated from manufacturer's standard thickness, but not less than 0.036-inch nominal-thickness steel sheet.
3. Boxed End Panels: Fabricated from 0.060-inch nominal-thickness steel sheet.
4. Finished End Panels: Fabricated from 0.024-inch nominal-thickness steel sheet.

L. Finish: powder coat.

1. Color(s): Custom color to match Architect’s sample. See Color Schedule on drawings.

2.3 FABRICATION

A. Fabricate metal lockers square, rigid, and without warp and with metal faces flat and free of dents or distortion. Make exposed metal edges safe to touch and free of sharp edges and burrs.

1. Form body panels, doors, shelves, and accessories from one-piece steel sheet unless otherwise indicated.
2. Provide fasteners, filler plates, supports, clips, and closures as required for complete installation.

B. Fabricate each metal locker with an individual door and frame; individual top, bottom, and back; and common intermediate uprights separating compartments. Factory weld frame members of each metal locker together to form a rigid, one-piece assembly.

C. Knocked-Down Construction: Fabricate metal lockers using nuts, bolts, screws, or rivets for nominal assembly at Project site.

D. Accessible Lockers: Fabricate as follows:

1. Locate bottom shelf no lower than 15 inches above the floor.

2. Where hooks, coat rods, or additional shelves are provided, locate no higher than 48 inches above the floor.

E. Hooks: Manufacturer's standard ball-pointed type, aluminum or steel; zinc plated.

F. Identification Plates: Manufacturer's standard, etched, embossed, or stamped aluminum plates, with numbers and letters at least 3/8 inch high.

G. Continuous Base: Formed into channel or zee profile for stiffness, and fabricated in lengths as long as practical to enclose base and base ends of metal lockers; finished to match lockers.

H. Continuous Sloping Tops: Fabricated in lengths as long as practical, without visible fasteners at splice locations; finished to match lockers.

1. Sloping-top corner fillers, mitered.

I. Recess Trim: Fabricated with minimum 2-1/2-inch face width and in lengths as long as practical; finished to match lockers.

J. Filler Panels: Fabricated in an unequal leg angle shape; finished to match lockers. Provide slip-joint filler angle formed to receive filler panel.

K. Boxed End Panels: Fabricated with 1-inch wide edge dimension, and designed for concealing fasteners and holes at exposed ends of nonrecessed metal lockers; finished to match lockers.

1. Provide one-piece panels for double-row (back-to-back) locker ends.

L. Finished End Panels: Designed for concealing unused penetrations and fasteners, except for perimeter fasteners, at exposed ends of nonrecessed metal lockers; finished to match lockers.

1. Provide one-piece panels for double-row (back-to-back) locker ends.

2.4 STEEL SHEET FINISHES

A. Factory finish steel surfaces and accessories except stainless-steel and chrome-plated surfaces.

B. Baked-Enamel Finish: Immediately after cleaning, pretreating, and phosphatizing, apply manufacturer's standard thermosetting baked-enamel finish. Comply with paint manufacturer's written instructions for application, baking, and minimum dry film thickness.

PART 3 - EXECUTION

3.1 EXAMINATION

A. Examine walls, floors, and support bases, with Installer present, for compliance with requirements for installation tolerances and other conditions affecting performance of the Work.

B. Prepare written report, endorsed by Installer, listing conditions detrimental to performance of the Work.

C. Proceed with installation only after unsatisfactory conditions have been corrected.

3.2 INSTALLATION

A. General: Install level, plumb, and true; shim as required, using concealed shims.

1. Anchor locker runs at ends and at intervals recommended by manufacturer, but not more than 36 inches o.c. Using concealed fasteners, install anchors through backup reinforcing plates, channels, or blocking as required to prevent metal distortion.
2. Anchor single rows of metal lockers to walls near top and bottom of lockers.

B. Knocked-Down Metal Lockers: Assemble with standard fasteners, with no exposed fasteners on door faces or face frames.

C. Equipment and Accessories: Fit exposed connections of trim, fillers, and closures accurately together to form tight, hairline joints, with concealed fasteners and splice plates.

1. Attach hooks with at least two fasteners.
2. Attach door locks on doors using security-type fasteners.
3. Identification Plates: Identify metal lockers with identification indicated on Drawings.

   a. Attach plates to each locker door, near top, centered, with at least two aluminum rivets.
   b. Attach plates to upper shelf of each open-front metal locker, centered, with a least two aluminum rivets.

4. Attach recess trim to recessed metal lockers with concealed clips.
5. Attach filler panels with concealed fasteners. Locate filler panels where indicated on Drawings.
6. Attach sloping-top units to metal lockers, with closures at exposed ends.
7. Attach boxed end panels with concealed fasteners to conceal exposed ends of nonrecessed metal lockers.
8. Attach finished end panels with fasteners only at perimeter to conceal exposed ends of nonrecessed metal lockers.

3.3 ADJUSTING, CLEANING, AND PROTECTION

A. Clean, lubricate, and adjust hardware. Adjust doors and latches to operate easily without binding.

B. Protect metal lockers from damage, abuse, dust, dirt, stain, or paint. Do not permit use during construction.

C. Touch up marred finishes, or replace metal lockers that cannot be restored to factory-finished appearance. Use only materials and procedures recommended or furnished by locker manufacturer.

3.4 LOCKER SCHEDULE

A. ML-1 Standard double tier (15" W x 18" D x 60" H) at corridors
B. ML-2 Standard single tier (12" W x 12" D x 72" H) at kitchen area

END OF SECTION 105113

SECTION 105613 - METAL STORAGE SHELVING

PART 1 - GENERAL

1.1 RELATED DOCUMENTS

A. Drawings and general provisions of the Contract, including General and Supplementary Conditions and Division 01 Specification Sections, apply to this Section.

1.2 SUMMARY

A. Section Includes:

1. Four-post metal storage shelving.

1.3 PERFORMANCE REQUIREMENTS

A. Structural Performance for Four-Post Metal Storage Shelving: Capable of withstanding the loads indicated according to MH 28.1.

1.4 SUBMITTALS

A. Product Data: For each type of product indicated. Include rated capacities, construction details, material descriptions, dimensions of individual components and profiles, and finishes for metal storage shelving.

B. Shop Drawings: For metal storage shelving. Include plans, elevations, sections, details, and attachments to other work. Include installation details of connectors, lateral bracing, and special bracing.

C. Samples for Initial Selection: For units with factory-applied color finishes. Include similar Samples of accessories involving color selection.

D. Product Schedule: For metal storage shelving, use same designations as Metal Storage Shelving Schedule.

1.5 QUALITY ASSURANCE

A. Installer Qualifications: Manufacturer's authorized representative who is trained and approved for installation of units required for this Project.

B. Source Limitations: Obtain metal storage shelving from single source from single manufacturer.

1.6 PROJECT CONDITIONS

A. Environmental Limitations: Do not deliver or install metal storage shelving until spaces are enclosed and weathertight, wet work in spaces is complete and dry, and temporary HVAC system is operating and maintaining ambient temperature and humidity conditions at occupancy levels during the remainder of the construction period.

1.7 COORDINATION

A. Coordinate locations and installation of metal storage shelving that may interfere with ceiling systems including lighting, HVAC, speakers, sprinklers, access panels, electrical switches or outlets, and floor drains.

PART 2 - PRODUCTS

2.1 MATERIALS

A. Cold-Rolled Steel Sheet: ASTM A 1008/A 1008M, Commercial Steel (CS), Type B.

B. Steel Tubing: ASTM A 513, Type 2.

2.2 FOUR-POST METAL STORAGE SHELVING

A. Open Four-Post Metal Storage Shelving MS-#: Factory-formed, field-assembled, freestanding system, designed for shelves to span between and be supported by corner posts, with shelves adjustable over the height of shelving unit. Fabricate initial shelving unit with a post at each corner. Fabricate additional shelving units similarly, so each unit is independent. Provide fixed top and bottom shelves, adjustable intermediate shelves, and accessories indicated.

1. Basis-of-Design Product: Subject to compliance with requirements, provide Burroughs Corporation: Box Edge Plus or comparable product by one of the following:

   A. Adjustable Shelving Products; a division of Karp Associates, Inc.: ACR Series
   B. Equipto: Iron Grip
   C. Penco Products, Inc.: Clipper Industrial Shelving
   D. Tennsco: Q-Line

2. Load-Carrying Capacity per Shelf: 400 lb. minimum.

3. Posts: Fabricated from hot-rolled steel; in offset angle shape; with perforations at 1-1/2 inches o.c. to receive shelf-to-post connectors.

   A. Steel Thickness, Nominal: 14 gauge (0.075 inch) or as required for load-carrying capacity per shelf and number of shelves.
   B. Post Base: Bolt leveler.

4. Bracing: Manufacturer's standard, single or double diagonal cross bracing at back and ends; as required for stability, load-carrying capacity of shelves, and number of shelves.

5. Solid-Type Shelves: Fabricated from steel sheet as follows:

   A. Steel-Sheet Thickness, Nominal: 18 gauge (0.048 inch) or as required for load-carrying capacity per shelf.
   B. Fabricate fronts and backs of shelves with box-formed edges, with corners lapped and welded.
      a) Where required by Manufacturer to meet loading requirements, fabricate fronts and backs of shelves with vertical edges that are flanged and returned, with edges reinforced with steel bars or channels.

6. Shelf-to-Post Connectors: Compression clips.

7. Base: Closed, with base strips fabricated from same material and with same finish as shelving.

8. Metal Storage Shelving Schedule: (Width x Depth x Height)

   a. MS-1: 48” x 18” x 84”
   b. MS-2: 36” x 24” x 84”
   c. MS-3: 48” x 24” x 84”

9. Finish: powder coat.

    a. Color and Gloss: As selected by Architect from manufacturer's full range.

2.3 FABRICATION

A. Shop Fabrication: Prefabricate shelving components in shop to greatest extent possible to minimize field fabrication; temporarily preassemble shelving components where necessary to ensure that field-assembled components fit together properly. Use connections that maintain structural value of joined pieces. Clearly mark units for reassembly and coordinated installation.

B. Fabricate metal storage shelving square and rigid, with posts plumb and true and shelves flat and free of dents or distortion. Fabricate connections to form a rigid structure, free of buckling and warping.

1. Form exposed work true to line and level with accurate angles and surfaces and straight sharp edges.
2. Form exposed connections with hairline joints, flush and smooth, using concealed fasteners where possible. Locate joints where least conspicuous.
3. Build in straps, plates, brackets, and other reinforcements as needed to support shelf loading.
4. Cut, reinforce, drill, and tap metal fabrications to receive hardware, fasteners, and similar items.

C. Form metal in maximum lengths to minimize joints. Form bent-metal corners to smallest radius possible without causing grain separation or otherwise impairing the Work.

D. Form edges and corners free of sharp edges or rough areas. Fold back and crimp exposed edges of unsupported sheet metal to form a ½-inch- wide hem on the concealed side; ease edges of metal plate to radius of approximately 1/32 inch. Shear and punch metals cleanly and accurately. Remove burrs.

E. Weld corners and seams continuously to develop strength, minimize distortion, and maintain the corrosion resistance of base metals. At exposed locations, finish welds and surfaces smooth and blended so no roughness shows after finishing and contour of welded surface matches that of adjacent surface. Weld before finishing components to greatest extent possible. Remove weld spatter and welding oxides from exposed surfaces before finishing.

2.4 GENERAL FINISH REQUIREMENTS

A. Comply with NAAMM's "Metal Finishes Manual for Architectural and Metal Products" for recommendations for applying and designating finishes.

B. Appearance of Finished Work: Noticeable variations in same piece are not acceptable. Variations in appearance of adjoining components are acceptable if they are within the range of approved Samples and are assembled or installed to minimize contrast.

2.5 STEEL FINISHES

A. Surface Preparation: Remove mill scale and rust, if present, from uncoated steel, complying with SSPC-SP 5/NACE No. 1, "White Metal Blast Cleaning" or SSPC-SP 8, "Pickling."

B. Powder-Coat Finish: Manufacturer's standard Epoxy Polyester Hybrid powder coat applied in an electrostatic-charged powder coat factory spray-painting system. Comply with coating manufacturer's written instructions for cleaning, pretreatment, application, and minimum dry thickness.

PART 3 - EXECUTION

3.1 EXAMINATION

A. Examine areas, with Installer present, for compliance with requirements for installation tolerances and other conditions affecting performance of the Work.

B. Examine floors for suitable conditions where metal storage shelving will be installed.

C. Proceed with installation only after unsatisfactory conditions have been corrected.

3.2 INSTALLATION

A. Install metal storage shelving level, plumb, square, rigid, true, and with shelves flat and free of dents or distortion. Make connections to form a rigid structure, free of buckling and warping.

1. Install exposed connections with hairline joints, flush and smooth, using concealed fasteners where possible.
2. Install braces, straps, plates, brackets, and other reinforcements as needed to support shelf loading and as required for stability.
3. Adjust post-base bolt leveler to achieve level and plumb installation.
4. Install shelves in each shelving unit at spacing indicated on Drawings or, if not indicated, at equal spacing.

    a. Four-Post Metal Storage Shelving: Install four clips, one at each post, for support of each shelf; with clips fully engaged in post perforations.

3.3 ERECTION TOLERANCES

A. Erect four-post metal storage shelving to a maximum tolerance from vertical of 1/2 inch in up to 10 feet of height, not exceeding 1 inch for heights taller than 10 feet.

3.4 ADJUSTING

A. Adjust metal storage shelving so that connectors and other components engage accurately and securely.

B. Adjust and lubricate operable components to operate smoothly and easily, without binding or warping. Check and readjust operating hardware.

C. Touch up marred finishes or replace metal storage shelving that cannot be restored to factory-finished appearance. Use only materials and procedures recommended or furnished by metal storage shelving manufacturer.

D. Replace metal storage shelving that has been damaged or has deteriorated beyond successful repair by finish touchup or similar minor repair procedures.

END OF SECTION 105613

SECTION 107316 - PREFABRICATED CANOPY SYSTEMS

PART 1 - GENERAL

1.1 RELATED DOCUMENTS

A. Drawings and general provisions of the Contract, including General and Supplementary Conditions and Division 1 Specification Sections, apply to this Section.

1.2 SUMMARY

A. This Section includes design, fabrication and installation of complete welded, extruded aluminum wall mounted canopies. All work shall be in accordance with the drawings and this specification.

1. Manufacturer's standard building components and accessories may be used, provided components, accessories, and complete structure conform to design indicated and specified requirements.

B. Custom extruded aluminum canopies as shown on drawings at entrance.

1.3 SYSTEM PERFORMANCE REQUIREMENTS

A. General: Engineer, design, fabricate and erect the pre-engineered building system to withstand loads from winds, gravity, structural movement including movement thermally induced, and to resist in-service use conditions that the building will experience, including exposure to the weather, without failure.

B. Submittals:

1. Product Data: Submit manufacturer's product information, specifications and installation instructions for building components and accessories.
2. Shop Drawings: Submit complete shop drawings including all necessary plan dimensions, elevations and details. Contractor shall verify all dimensions and provide elevations at each column, finish floor, and related soffit before releasing to manufacturer for fabrication.
3. Certification: Submit design calculations signed and sealed by a Registered Professional Engineer. Design calculations shall state that the protective cover system design complies with the wind requirements of ANSI/ASCE 7-88, the stability criteria of applicable building code, and all other governing criteria. Engineer to be registered in state where project is located.

C. Quality Assurance:

1. Protective cover shall be wholly produced by a recognized manufacturer with at least **10** years experience in the design and fabrication of extruded aluminum protective cover system. Components shall be installed by manufacturer. Protective cover system, including material and workmanship, shall be warranted from defects for a period of one year from substantial completion.

PART 2 - PRODUCTS

2.1 AVAILABLE MANUFACTURERS

A. Basis of Design: Subject to compliance with requirements, provide **Mapes Architectural Products; Super Lumideck**, or comparable product by one of the following:

1. Dittmer Architectural Aluminum
2. Peachtree Protective Covers
3. E.L. Burns Co., Inc.

2.2 DESIGN

A. Protective cover shall be all welded extruded aluminum system complete with internal drainage. Non-welded systems are not acceptable. Roll formed deck is not acceptable. Expansion joints shall be included to accommodate temperature changes of 120°F.

2.3 MATERIALS

A. Aluminum Members: All sections shall be extended aluminum 6063 alloy, Heat treated to a T-6 Temper.

B. Fasteners: Fasteners shall be aluminum, 18-8 stainless steel, 300 series stainless steel, or 410 stainless steel.

C. Protective coating: Aluminum columns embedded in concrete or solid grouted cmu shall be protected by clear acrylic.

D. Grout:

1. Portland Cement: ASTM C 150, Type 1.
2. Sand: ASTM C 404.
3. Water: Potable

E. Gaskets: Gaskets shall be dry seal santoprene pressure type.

F. Aluminum Flashing: ASTM B 209, Type 3003 H14, 0.040 inch, minimum.

2.4 COMPONENTS

A. Beams: Beams shall be open-top tubular extrusion of size and shape shown on drawings, top edges thickened for strength and designed to receive deck members in self-flashing manner. Extruded structural ties shall be installed in tops of all beams.

B. Deck: Deck shall be extruded self-flashing sections interlocking into composite unit with sufficient chamber to offset dead load deflection and cause positive drainage. Welded plates shall be used as closures at deck ends.

C. Fascia: Fascia shall be manufacturer's standard shape. Size as indicated on drawings.

D. Flashing: Flashing shall be .040 aluminum (min.). All thru-wall flashing by others.

E. Hanger rods: Manufacturer's standard, as required to comply with structural performance requirements.

2.5 FABRICATION

A. Bent Construction: Beams and columns shall be factory welded with neatly mitered corners onto one-piece rigid bents. All welds shall be smooth and uniform using an inert gas shielded arc. Suitable edge preparation shall be performed to assure 100% penetration. Grind welds only where interfering with adjoining structure to allow for flush connection. Field welding is not permitted. Rigid mechanical joints shall be used shipping limitations prohibit the shipment of fully welded bents.

B. Deck Construction: Deck shall be manufactured of extruded modules that interlock in self-flashing manner. Interlocking joints shall be positively fastened at 8²0.C. creating a monolithic structural unit capable for developing the full strength of the sections. The fastenings must have minimum shear strength of 350 pounds each. Deck shall be assembled with sufficient camber to offset dead load deflection.

2.6 FINISHES

A. High-Performance Organic Finish: Three-coat fluoropolymer finish complying with AAMA 2605 and containing not less than 70 percent PVDF resin by weight in both color coat and clear top coat. Prepare, pretreat, and apply coating to exposed metal surfaces to comply with coating and resin manufacturers' written instructions.

1. Color and Gloss: As selected by Architect from manufacturer's full range.

PART 3 - EXECUTION

3.1 PREPARATION

A. Erection shall be performed after all curtain wall, EIFS and roofing work in the vicinity is complete and cleaned.

B. Contractor shall verify and approve dimensions and elevations shown on shop drawings with actual field dimensions to verify conditions are satisfactory for installation.

3.2 INSTALLATION

A. Column Sleeves: Column sleeves (styrofoam blockouts) or anchor bolts (if required) shall be furnished by the protective manufacturer and installed by Contractor.

B. Erection: Protective cover shall be erected true to line, level and plumb. Aluminum columns embedded in concrete shall be filled with grout to the discharge level to prevent standing water. Non-draining columns shall have weep holes installed at top of concrete to remove condensation.

C. Coordination: Coordinate installation with other trades as necessary for a complete and operable installation.

3.3 CLEANING

A. All protective cover components shall be cleaned promptly after completion of installation.

3.4 PROTECTION

A. Extreme care shall be taken to protect materials during and after installation.

END OF SECTION 107316

SECTION 107500 - FLAGPOLES

PART 1 - GENERAL

1.1 RELATED DOCUMENTS

A. Drawings and general provisions of the Contract, including General and Supplementary Conditions and Division 01 Specification Sections, apply to this Section.

1.2 SUMMARY

A. Section includes One (1) aluminum ground-mounted flagpole as designated on Civil drawings.

B. Owner-Furnished Material: Flags.

1.3 SUBMITTALS

A. Product Data: For each type of product indicated. Include construction details, material descriptions, dimensions of individual components and profiles, operating characteristics, fittings, accessories, and finishes for flagpole.

B. Shop Drawings: For flagpoles. Include plans, elevations, details, and attachments to other work. Show general arrangement, jointing, fittings, accessories, grounding, anchoring, and support.

1. Include section, and details of foundation system for ground-mounted flagpoles.

C. Samples for Verification: For each type of exposed finish required, in manufacturer's standard sizes.

1.4 QUALITY ASSURANCE

A. Source Limitations: Obtain flagpole as complete unit, including fittings, accessories, bases, and anchorage devices, from single source from single manufacturer.

1.5 DELIVERY, STORAGE, AND HANDLING

A. General: Spiral wrap flagpoles with heavy paper and enclose in a hard fiber tube or other protective container.

PART 2 - PRODUCTS

2.1 MANUFACTURERS

A. Manufacturers: Subject to compliance with requirements, provide products by one of the following:

1. American Flagpole; a Kearney-National Inc. company.
2. Atlantic Fiberglass Products, Inc.
3. Baartol Company.
4. Concord Industries, Inc.
5. Eder Flag Manufacturing Company, Inc.
6. Ewing Flagpoles.

7. Lingo Inc.; Acme Flagpole Company Division.
8. Millerbernd Manufacturing Company.
9. Morgan-Francis; Division of Original Tractor Cab Co., Inc.
10. PLP Composite Technologies, Inc.
11. Pole-Tech Company Inc.
12. U.S. Flag & Flagpole Supply, LP.
13. USS Manufacturing Inc.

2.2 FLAGPOLES

A. Flagpole Construction, General: Construct flagpoles in one piece if possible. If more than one piece is necessary, comply with the following:

1. Fabricate shop and field joints without using fasteners, screw collars, or lead calking.
2. Provide flush hairline joints using self-aligning, snug-fitting, internal sleeves.
3. Provide self-aligning, snug-fitting joints.

B. Exposed Height: 30 feet.

C. Metal Foundation Tube: Manufacturer's standard corrugated-steel foundation tube, not less than 0.064-inch- nominal wall thickness. Provide with 3/16-inch steel bottom plate and support plate; 3/4-inch-diameter, steel ground spike; and steel centering wedges welded together. Galvanize steel after assembly. Provide loose hardwood wedges at top of foundation tube for plumbing pole.

1. Provide flashing collar of same material and finish as flagpole.

2.3 FITTINGS

A. Finial Ball: Manufacturer's standard flush-seam ball, sized as indicated or, if not indicated, to match flagpole-butt diameter.

1. 0.063-inch spun aluminum with gold anodic finish.

B. Internal Halyard, Winch System: Manually operated winch with control stop device and removable handle, stainless-steel cable halyard, and concealed revolving truck assembly with plastic-coated counterweight and sling. Provide flush access door secured with cylinder lock. Finish truck assembly to match flagpole.

1. Halyard Flag Snaps: Provide two bronze swivel snap hooks per halyard.
   a. Provide with neoprene or vinyl covers.

2.4 MISCELLANEOUS MATERIALS

A. Drainage Material: Crushed stone, or crushed or uncrushed gravel; coarse aggregate.

B. Sand: ASTM C 33, fine aggregate.

C. Elastomeric Joint Sealant: Multicomponent nonsag urethane joint sealant complying with requirements in Division 07 Section "Joint Sealants" for Use NT (nontraffic) and for Use M, G, A, and, as applicable to joint substrates indicated, for Use O.

D. Bituminous Paint: Cold-applied asphalt emulsion complying with ASTM D 1187.

2.5 GENERAL FINISH REQUIREMENTS

A. Comply with NAAMM's "Metal Finishes Manual for Architectural and Metal Products" for recommendations for applying and designating finishes.

B. Appearance of Finished Work: Noticeable variations in same piece are not acceptable. Variations in appearance of adjoining components are acceptable if they are within the range of approved Samples and are assembled or installed to minimize contrast.

2.6 ALUMINUM FINISHES

A. Clear Anodic Finish: AAMA 611, AA-M12C22A41, Class I, 0.018 mm or thicker.

PART 3 - EXECUTION

3.1 EXAMINATION

A. Examine substrates, areas, and conditions, with Installer present, for compliance with requirements for installation tolerances, including foundation; accurate placement, pattern, orientation of anchor bolts, and other conditions affecting performance of the Work.

B. Proceed with installation only after unsatisfactory conditions have been corrected.

3.2 PREPARATION

A. Prepare uncoated metal flagpoles that are set in foundation tubes by painting below-grade portions with a heavy coat of bituminous paint.

B. Foundation Excavation: Excavate to neat clean lines in undisturbed soil. Remove loose soil and foreign matter from excavation and moisten earth before placing concrete. Place and compact drainage material at excavation bottom.

C. Provide forms where required due to unstable soil conditions and for perimeter of flagpole base at grade. Secure and brace forms to prevent displacement during concreting.

D. Place concrete, as specified in Division 03 Section "Cast-in-Place Concrete." Compact concrete in place by using vibrators. Moist-cure exposed concrete for not less than seven days or use nonstaining curing compound.

E. Trowel exposed concrete surfaces to a smooth, dense finish, free of trowel marks, and uniform in texture and appearance. Provide positive slope for water runoff to perimeter of concrete base.

3.3 FLAGPOLE INSTALLATION

A. General: Install flagpoles where shown and according to Shop Drawings and manufacturer's written instructions.

B. Ground Set: Place foundation tube, center, and brace to prevent displacement during concreting. Place concrete. Plumb and level foundation tube and allow concrete to cure. Install flagpole, plumb, in foundation tube.

1. Foundation Tube: Place tube seated on bottom plate between steel centering wedges and install hardwood wedges to secure flagpole in place. Place and compact sand in foundation tube and remove hardwood wedges. Seal top of foundation tube with a 2-inch layer of elastomeric joint sealant and cover with flashing collar.

2. END OF SECTION 107500

SECTION 113100 - RESIDENTIAL APPLIANCES

PART 1 - GENERAL

1.1 RELATED DOCUMENTS

A. Drawings and general provisions of the Contract, including General and Supplementary Conditions and Division 01 Specification Sections, apply to this Section.

1.2 SUMMARY

A. Section Includes:

1. Refrigeration appliances.
2. Cleaning appliances.

B. Related Sections:

1. Section 112600 "Unit Kitchens" for small, compact kitchen units that include residential appliances.

1.3 ACTION SUBMITTALS

A. Product Data: For each type of product indicated. Include rated capacities, operating characteristics, dimensions, furnished accessories, and finishes for each appliance.

1. Product Data for: For appliances indicated, documentation that products are ENERGY STAR rated.

B. Product Schedule: For appliances.

1.4 INFORMATIONAL SUBMITTALS

A. Warranties: Sample of special warranties.

1.5 CLOSEOUT SUBMITTALS

A. Operation and Maintenance Data: For each residential appliance to include in operation and maintenance manuals.

1.6 QUALITY ASSURANCE

A. Source Limitations: Obtain residential appliances from single source and each type of residential appliance from single manufacturer.

B. Accessibility: Where residential appliances are indicated to comply with accessibility requirements, comply with the U.S. Architectural & Transportation Barriers Compliance Board's ADA-ABA Accessibility Guidelines and ICC/ANSI A117.1.

1.7 WARRANTY

A. Special Warranties: Manufacturer's standard form in which manufacturer agrees to repair or replace residential appliances or components that fail in materials or workmanship within specified warranty period.

PART 2 - PRODUCTS

2.1 REFRIGERATOR/FREEZERS

A. Manufacturers: Subject to compliance with requirements, provide products by one of the following:
1. LG Appliances.
2. Samsung.
3. Sears Brands LLC (Kenmore).
4. Whirlpool Corporation.

B. Refrigerator/Freezer: Two-door refrigerator/freezer with freezer on top and complying with AHAM HRF-1.

1. Basis-of-Design Product: Whirlpool Gold – WRT771REYM

2. Energy Performance, ENERGY STAR: Provide appliances that qualify for the EPA/DOE ENERGY STAR product labeling program.

3. Appliance Color/Finish: Stainless steel.

2.2 CLOTHES WASHERS AND DRYERS

A. Manufacturers: Subject to compliance with requirements, provide products by one of the following:
1. LG Appliances.
2. Samsung.
3. Sears Brands LLC (Kenmore).
4. Whirlpool Corporation.

B. Clothes Washer CW #: Complying with ASSE 1007.

1. Type: Stacking, front-loading unit.
2. Basis-of-Design Product: Whirlpool Duet – WFW70HEBW

3. Energy Performance, ENERGY STAR: Provide appliances that qualify for the EPA/DOE ENERGY STAR product labeling program.
4. Water-Efficient Clothes Washer: Provide clothes washer with modified energy factor greater than or equal to 2.0 and water factor less than 5.5.
5. Appliance Finish: Porcelain enamel on top and lid; baked enamel on front and sides.

a. Color: White.

6. Front-Panel Finish: Manufacturer's standard.

a. Panel Color: White.

C. Clothes Dryer: Complying with AHAM HLD-1.
1. Type: Stacking, frontloading, electric unit.
2. Basis-of-Design Product: Whirlpool Duet – WED70HEBW
3. Features:
a. Stacking kit to stack dryer over washer.

4. Appliance Finish: Porcelain enamel on top and lid; baked enamel on front and sides.

a. Color: White.

5. Front-Panel Finish: Manufacturer's standard.

a. Panel Color: White.

2.3 GENERAL FINISH REQUIREMENTS

A. Protect mechanical finishes on exposed surfaces from damage by applying a strippable, temporary protective covering before shipping.

B. Appearance of Finished Work: Noticeable variations in same piece are not acceptable. Variations in appearance of adjoining components are acceptable if they are within the range of approved Samples and are assembled or installed to minimize contrast.

PART 3 - EXECUTION

3.1 EXAMINATION

A. Examine substrates and conditions, with Installer present, for compliance with requirements for installation tolerances, power connections, and other conditions affecting installation and performance of residential appliances.

B. Examine roughing-in for piping systems to verify actual locations of piping connections before appliance installation.

C. Prepare written report, endorsed by Installer, listing conditions detrimental to performance of the Work.

D. Proceed with installation only after unsatisfactory conditions have been corrected.

3.2 INSTALLATION, GENERAL

A. General: Comply with manufacturer's written instructions.

B. Freestanding Equipment: Place units in final locations after finishes have been completed in each area. Verify that clearances are adequate to properly operate equipment.

C. Utilities: Comply with plumbing and electrical requirements.

3.3 FIELD QUALITY CONTROL

A. Perform tests and inspections.

1. Manufacturer's Field Service: Engage a factory-authorized service representative to inspect components, assemblies, and equipment installations, including connections, and to assist in testing.

B. Tests and Inspections:

1. Perform visual, mechanical, and electrical inspection and testing for each appliance according to manufacturers' written recommendations. Certify compliance with each manufacturer's appliance-performance parameters.
2. Leak Test: After installation, test for leaks. Repair leaks and retest until no leaks exist.
3. Operational Test: After installation, start units to confirm proper operation.
4. Test and adjust controls and safeties. Replace damaged and malfunctioning controls and components.

C. An appliance will be considered defective if it does not pass tests and inspections.

D. Prepare test and inspection reports.

3.4 DEMONSTRATION

A. Engage a factory-authorized service representative to train Owner's maintenance personnel to adjust, operate, and maintain residential appliances.

END OF SECTION 113100

SECTION 11 4000

FOODSERVICE EQUIPMENT

PART 1 - GENERAL

1.01 DESCRIPTION

A. Scope: Furnish all labor, materials, services, equipment and appliances required to provide and deliver all foodservice equipment hereinafter specified into the building, uncrate, assemble, hang, set-in-place, level, and completely install, exclusive of final utility connections.

B. Related Work Specified Elsewhere:
1. All plumbing, electrical and ventilating work required in conjunction with commercial foodservice equipment including rough-in to points indicated on mechanical drawings, and final connections from rough-in points, electrical service to points of connection and final connections shall be by Divisions 22, 23 and 26.
2. Refrigeration work will be done by the Kitchen Equipment Contractor except for electrical connections to and between compressors, blower coils, controls, etc. These final connections shall be by Divisions 22 and 26.
3. All traps, steam traps, grease traps, line strainers, tail pieces, valves, stops, shut-offs, and fittings necessary for equipment specified will be furnished and installed under mechanical contract by Division 22 unless specifically called for otherwise under each item.
4. All line and disconnect switches, safety cut-offs and fittings, convenience boxes or other electrical controls, fittings and connections will be furnished and installed under electrical contract by Division 26, unless specifically indicated otherwise in the item specifications. Starting switches for certain specified pieces of foodservice equipment are to be provided by Kitchen Equipment Contractor. Those starting switches, if furnished loose as standard by Foodservice Manufacturers (other than fabricated items), shall be mounted and wired complete under Division 26.
5. Any sleeves or conduit required for refrigeration, syrup tubing, or carbonation tubing will be furnished and installed under Division 22.
6. Unless specifically called for in the Item Specifications, ventilating fans and all duct work between same and ceiling rough-in openings, and from same to discharge opening in building will be furnished and installed by Division 22.

1.02 DEFINITIONS

A. All references to the terms "Contractor", "Kitchen Equipment Contractor", or "K.E.C." in the specifications and/or on the drawings shall be defined to mean the Kitchen Equipment Contractor.

B. All references to the term "Owner" in the specifications and/or on the drawings shall be defined to mean the Owner or Owner's designated representative and the Foodservice Equipment Consultant.

C. All references to the term "Consultant" or "Foodservice Equipment Consultant" in the specifications and/or on the drawings shall be defined to mean **NYIKOS ASSOCIATES, INC.** its employees, and authorized representatives and is referred to throughout the contract documents as if singular in number and masculine in gender.

D. The phrase "The K.E.C. shall" or "by the K.E.C.", as applicable, is understood to be included as a part of each sentence, paragraph or article of these specifications unless otherwise indicated or specified.

1.03 QUALITY ASSURANCE

A. Qualification of Suppliers:
1. Commercial foodservice equipment suppliers shall submit satisfactory evidence of compliance with the following qualifications and conditions to be approved.
   a. Successful completion of jobs of comparable scope.
   b. Have manufacturer's authorization to distribute and install specified factory items of equipment.
   c. Maintain a permanent staff experienced in the installation of foodservice equipment and preparation

of professional style rough-in drawings and brochures.

d. Maintain or have access to fabrication shop meeting N.S.F. requirements. If other than foodservice equipment suppliers own fabrication shop, obtain Consultant approval of fabrication shop desired to be used.

e. Maintain or have access to a readily available stock of repair and replacement parts, together with authorized service personnel.

B. Qualification of Fabricators:

1. Fabricators shall be an N.S.F. approved organization with trained personnel and facilities to properly design, detail and fabricate equipment in accordance with the specifications and standard details contained herein.
2. Custom fabricated equipment shall bear the National Sanitation Foundation seal of approval and listed as such under N.S.F. Standards No. 2 and No. 33.
3. Only one (1) fabricator shall be used for this project, and all equipment will be fabricated at the same shop. Where units cannot be fully shop-fabricated, complete fabrication at project site.
4. Acceptable fabricators are:
   a. Pro Stainless, Inc.; Keyser, WV
   b. Commercial Stainless, Inc.; Bloomsburg, PA
   c. Keystone Custom Fabricators, Inc.; Elizabeth, PA
   d. Eagle Spec Fab; Symrna, DE
   e. Select Stainless Inc.; Matthews, NC
   f. Other fabricators, as approved by Consultant.

C. Qualification of Manufacturers:

1. Manufacturers shall be regularly engaged in the production of items furnished and shall have demonstrated the capability to furnish similar equipment that performs the functions specified or indicated herein.

D. Standard Products:

1. Materials, products, and equipment furnished under this contract shall be the standard items of manufacturers regularly engaged in the production of such materials, products, and equipment and shall be of the manufacturer's latest design that complies with the specifications which have been produced and used successfully on other projects and in similar applications.
2. Discrepancies within contract documents should immediately be brought to the attention of the Consultant in writing for clarification prior to fabrication or ordering of standard items.

1.04 PLANS & SPECIFICATIONS

A. Specifications and drawings have been prepared to form the basis for procurement, erection, start-up and adjustment of all equipment in this contract. Plans and specifications shall be considered as mutually explanatory and work required by one, but not the other, shall be performed as though required by both. Items required by one, but not by the other shall be provided as though required by both. Work shall be accomplished as called for in specifications and shown on drawings, so that all items of equipment shall be completely functional for purpose for which they were designed. When there is any discrepancy between drawings and specifications, drawings shall govern. Bidders should seek clarification of any discrepancies from the Consultant prior to bidding.

1.05 SUBMITTALS

A. General Requirements:

1. Within six (6) weeks or earlier, as required, assemble and submit all shop drawings, rough-in drawings, brochures, color samples, etc. as a complete package. There will be no review of partial submittals.
2. Any and all costs, to all trades and parties involved, arising from delay of project due to non-submittal of the complete package by the K.E.C. within a reasonable time period shall be borne solely by the K.E.C.
3. Identify each submittal by project name, date, contractor, submittal name, and any other necessary information to distinguish it from other submittals.

B. Shop Drawings:

1. Submit one (1) set of paper sepia and one (1) set of bond prints on sheets equal in size to Contract Documents of equipment specified for custom fabrication including all accessories attached to each item.

2. Drawings shall be detailed and fully dimensioned to a minimum scale of 3/4"=1'-0" for plan and elevation views, and 1-1/2"=1'-0" for sections, based on the floor plan(s) and following item specifications. Drawings will be checked for thoroughness, accuracy, completeness, neatness, and returned for corrections, if necessary.

C. Rough-in Drawings:
1. Submit one (1) set of paper sepia and one (1) set of bond prints on sheets equal in size to Contract Documents of detailed arrangement plans professionally prepared from architects dimensioned plans (not traced from Contract Documents) at a minimum scale of 1/4"=1'-0".
2. Equipment Layout Plan showing arrangement of all items specified and identified on schedule of equipment listing item number, description, quantity, manufacturer, model number, and remarks.
3. Ventilation Plan showing dimensioned locations of all duct openings for ventilators and dishmachines identifying size, c.f.m. required (exhaust and supply), static pressures, and connection heights.
4. Plumbing/Electrical Plans showing dimensioned locations, sizes, elevations and capacities of all utility services required for each item of equipment in relation to finished walls, columns, and heights above finished floor.
5. Special Conditions Plan showing exact dimensions and details of all masonry bases, floor depressions, critical partition locations/heights, wall openings, reinforcing for wall and/or ceiling mounted equipment, and conduit locations for soda and compressed gas lines.

D. Equipment Brochures:
1. Submit two (2) hard bound copies of manufacturer's illustrations and technical data for approval prior to procurement. All items of Standard Manufacture shall be submitted, including items purchased to be built into fabricated equipment. Each illustration shall be marked to accurately describe the item to be furnished as specified. Include all deviations from standard information (i.e., voltage, phase, load, etc.).
2. Include a separate information sheet ahead of each illustration sheet showing all service connection sizes, electrical requirements, loads, consumptions, and all accessories specified.
3. Manufacturer's suggested schematic drawings for connection of mechanical and electrical services for such items as booster heaters, disposers, or any other item of equipment that may require the same.

E. Miscellaneous Shop Drawings:
1. Submit one (1) set of paper sepia and one (1) set of bond prints of manufactured equipment specified requiring clarification and approval such as, walk-in cooler/freezer drawings, ventilator drawings, utility raceway drawings, and refrigeration system drawings.

F. Operation and Maintenance Manuals:
1. Submit four (4) sets bound in hard covered book form for all mechanically operated equipment of standard manufacture. Include operating and cleaning/maintenance instructions, parts listing, recommended parts inventory listing and purchase source, copy of warranties, and similar applicable information.
2. Brochure covers shall bear the job name, date, and name of contractor.

G. Manufacturer's List:
1. The K.E.C. shall submit in writing a list of all manufacturer's representatives of the food service equipment such as convection ovens, ranges, etc., and their authorized service agencies' addresses and telephone numbers; to be presented after submission of manufacture data.

H. Samples:
1. Samples of materials, products, and fabrication methods, shall be submitted for approval upon request at no additional cost, before proceeding with work.

I. Re-submission Requirements:
1. Shop Drawings:
   a. Revise initial drawings as required and resubmit in accordance with submittal procedures.
   b. Indicate on drawings all changes which have been made in addition to those requested by Consultant.
2. Product Data and Samples:
   a. Submit new data and samples as required for initial submittal.
   b. Make all re-submittals within fourteen (14) working days from date of Consultants previous action.

J. Approvals:

1. After approval of the submittals listed above, furnish as many prints and copies as are required for the various trades, the Owner, the Architect, and the Consultant.
2. The approval of the shop drawings will be general and shall not relieve the K.E.C. of responsibility for proper fitting, finishing, quantities, and erection of work in strict accordance with the contract requirements, nor does it relieve him of the responsibility of furnishing material and workmanship not indicated on approved shop drawings but required for the completion of his work.
3. Approval by the Consultant and/or Owner of the manufacturer's data submitted by the K.E.C. does not waive the responsibility of K.E.C. to furnish each item of equipment in complete compliance with the specifications and drawings. Discrepancies between Contract Documents and furnished equipment shall be corrected even after approval and installation of this equipment at no additional cost to the Owner.

1.06 PRODUCT DELIVERY, STORAGE AND HANDLING

A. Delivery:
1. Equipment shall be delivered to the job site only after the building is weather-safe and vandal-safe.

B. Storage:
1. Store equipment in an area convenient to the point of installation in such a way that it can be protected from the weather and job hazards.

C. Protection:
1. Wrapping and protective coatings shall remain on all items until ready for use and in the case of stainless steel items, until installation is complete and the job is ready for cleaning.
2. Existing equipment not scheduled for removal but to remain within the construction area shall be wrapped with protective plastic and/or padding to prevent damage and shall remain on all items until installation is complete and the job is ready for cleaning.

D. Damage:
1. All responsibility shall rest with the K.E.C. for any damage or loss incurred prior to final acceptance. Such items as may be lost or damaged shall immediately be replaced or repaired to a new condition to the complete satisfaction of and at no additional cost to the Owner.

1.07 JURISDICTION TRADE AGREEMENTS AND RESTRICTIONS

A. Include the work specified, shown or reasonably infer able as part of foodservice equipment. Portions of this work may be subcontracted to those qualified to do such work, as may be necessary because of jurisdictional trade agreements and restrictions.

1.08 REGULATIONS AND CODES

A. Except as otherwise indicated, each item of equipment shall comply with the latest current edition of the following standards as applicable to the manufacture, fabrication, and installation of the work in this section.
1. N.S.F. Standards: Comply with National Sanitation Foundation Standards and criteria, and provide N.S.F. "Seal of Approval" on each manufactured item and major items of custom-fabricated work.
2. U.L. Standards: For electrical components and assemblies, provide either U.L. labeled products or, where no labeling service is available, provide a complete index of the components used as selected from the U.L. "Recognized Component Index".
3. A.N.S.I. Standards: For gas-burning equipment, comply with A.N.S.I. Z21-Series standards. Comply with A.N.S.I. B57.1 for compressed gas cylinder connections and with applicable standards of the Compressed Gas Association for water connection air gaps and vacuum breakers.
4. A.G.A.: All gas-fired equipment shall be A.G.A. Approved, equipped to operate on the type gas available at the job site and shall contain 100% automatic safety shut-off devices.
5. N.F.P.A. Standards: Comply with N.F.P.A. Bulletin 96 for exhaust systems and with N.F.P.A. Bulletins 17, 17A & 96 and U.L. 300 for fire extinguishing systems.
6. A.S.M.E. Code: Comply with A.S.M.E. boiler code requirements for steam generating and steam heated equipment. Provide A.S.M.E. inspection, stamps, and certification of registration with National Board.
7. National Electric Code: Comply with N.E.C. Volume 5 for electrical wiring and devices included with foodservice equipment.
8. All authorities having jurisdiction over this type of equipment and/or installation.

9. Where specifications and/or drawings require mechanical, electrical or refrigeration work to be performed, such work shall be done in strict conformance to other portions of the Base Building Specification which sets forth standards for this type of work.
10. Where there exists two standards or codes for one type of work, the stricter method shall govern.

1.09 WARRANTIES

A. Warrantee in writing all equipment and fabrication against defects and workmanship for a period of two (2) years from date of acceptance.
   1. Each piece of mechanical equipment shall be listed, together with the authorized service and repair agency whom the Owner will call should malfunctions occur within the one-year (1) guarantee period.

B. Refrigeration system compressors shall be warranted for five (5) years by the manufacturer. Free refrigeration service, including parts and labor, shall be furnished for two (2) years from date of acceptance.

1.10 JOB CONDITIONS

A. Visit the job site to field check actual wall dimensions and roughing-in and shall be responsible for fabricating and installing the equipment in accordance with the available space and utility services as they exist on the job site.

B. Check all door openings, passageways, elevators, etc., to be sure that the equipment can be conveyed to its proper location within the building and if necessary, check the possibility of holding wall erection, placement of doorjambs, windows, etc. for the purpose of moving the equipment to its proper location with the Contractor. Any removal and rebuilding of walls, partitions, doorjambs, etc. necessary to place the equipment, or if caused by incorrect information on the Contractor's drawings, shall be done at the expense of the K.E.C., at no additional cost to the Owner.

C. Notify the Consultant and Owner before fabrication of equipment of any discrepancies between plans and specifications and actual conditions on the job.

D. Before finished floors, walls, and/or ceilings are in place, physically check the location of all "rough-ins" at the job site. Report discrepancies in writing.

E. Any changes required after fabrication has been started to ensure equipment accurately fitting the space as it exists and conforming to actual field dimensions on the job shall be made at no additional cost to the Owner.

F. If special hoisting equipment and operators are required, include such cost as part of the bid for this work.

1.11 CHANGES IN THE WORK

A. The Owner reserves the right to require reasonable modification to be made in the routing of work and relocation of equipment. This specifically refers to conditions where interference occurs or where more desirable accessibility can be obtained or whose materials cannot be installed because of structural or mechanical conditions encountered. Such changes shall be made at no additional cost to the Owner.

1.12 PATENTS

A. Hold harmless and save the Owner and its officers, consultants, servants and employees from liability of any nature or kind, including costs and expenses for or on account of any copyrighted, patented, or un-patented invention, process, trademark, design, device, material, article, or appliance manufactured or used in the performance of the contract, including its use by the Owner, unless otherwise specifically stipulated in the Contract Documents.

B. If the Contractor has information that the process or article specified is an infringement of a patent, he shall be responsible for such loss unless he promptly gives such information to the Owner in writing. The contract price shall include all royalties or costs arising from the use of any or all of the above which are, in any way, involved in the contract.

1.13 CONTRACTOR'S WARRANTY

A. The Contractor represents and warrants:
   1. That he is financially solvent and that he is experienced in and competent to perform the types of work or to furnish the plans, materials, supplies or equipment, to be so performed or furnished by him.
   2. That he is familiar with all Federal, State, municipal, and department laws, ordinances, orders, and regulations, which may, in any way, affect the work of those employed therein, including, but not limited to, any special acts relating to the work or to the project of which it is a part.
   3. That such temporary and permanent work required by the contract as is to be done by him can be satisfactorily constructed and used for the purpose for which it is intended and that such construction will not injure any person or damage any property.
   4. That he has carefully examined the plans, specifications, addenda, if any, and the site of the work and that, from his own investigations, he has satisfied himself as to the nature and location of the work, the character, quality, and quantity of materials likely to be encountered, the character of equipment and other facilities needed for the performance of the work, the general and local conditions, and all other materials which may, in any way, affect the work or its performance.
   5. That he has satisfied himself as to the existing openings and accesses to the foodservice area through which his equipment shall be required to pass and that he is responsible for his equipment being delivered in as many sections as necessary to conform to the available space dictated by these existing limitations.

1.14 SUBSTITUTIONS

A. Bids submitted shall be for the specific manufacturer and model, size, capacity, and accessories, as specified or shown on the drawings.

B. The K.E.C. may quote upon brands and models of equipment other than those specified as a substitute. In the event that it is desired to request approval of substitute material, product, article, process, or item of equipment in lieu of that which is specified, submit a written request at least (10) working days prior to date of bids, setting forth the proposed substitution in detail, including an itemized analysis of the addition or deduction in the amount of the contract, if any, which will result if the substitution is approved. Each such request shall include a complete description of the proposed substitute, the name of the material or equipment for which it is to be substituted, drawings, cuts, performance and test data and any other data or information necessary for a complete evaluation. If approved, bidders will be notified in the form of addendum.

C. The Contractor shall be held responsible for additional costs to himself or any other prime contractor for changes required to install materials, devices, equipment, etc., which the Contractor has substituted for that specified.

D. The Owner reserves the right to award a contract or contracts based upon the inclusion or exclusion of one or more of the alternate estimates. The description of all workmanship and materials under the various headings of the specifications shall have the same meaning and force when applied to similar workmanship and materials in the alternate. If the descriptions are not specific, the workmanship shall be the best quality and the materials the best commercial grade.

E. Whenever any product is specified in the Contract Documents by reference to the name, trade name, make, or catalog number of any manufacturer or supplier, the intent is not to limit competition but to establish a standard of quality which is necessary for the project. Products of other manufacturers meeting the established criteria will be considered. However, please take note that the plumbing, electrical, steam, heating, ventilating, and air-conditioning drawings prepared by the consulting engineers, have been engineered based on the first product named under each item number designation. Therefore, any other product which is submitted for approval in lieu of the primary item specified, shall conform to the rough-in requirements established for the first product named, as well as physical size and building construction requirements.

F. Any equipment listed which is not in accordance with the provisions of these specifications will be rejected. If the Contractor fails to submit for approval within the specified time the list of equipment as required herein, the Consultant shall then have the right to make the final equipment selection. The selection made by the Consultant shall strictly conform to these specifications and will be final and binding, and the items shall be furnished and installed by the Contractor without change in the contract price at the time of completion.

G. It shall be the responsibility of the K.E.C. to prove that substitutions are equal to specified items. **NYIKOS ASSOCIATES, INC.** as the Owner's representative, shall be the determining authority as to the acceptability or equality of the substitutions. <u>No substitutions shall be approved after bids are received.</u>

1.15 DESIGN/MODEL CHANGE, DISCONTINUED ITEMS

A. All equipment specified shall be of latest design. Any improvements made in design and construction of prefabricated items before equipment is actually delivered to the project site, shall be incorporated in equipment, at no additional cost, provided such incorporation does not delay delivery date of equipment.

B. In the event of an item being discontinued after specified and prior to delivery to project site, the K.E.C. shall be responsible for notifying the Consultant in writing of the discontinued item and request an alternate of equal performance, including all accessories, at no additional cost to the Owner.

PART 2 - PRODUCTS

2.01 GENERAL

A. The equipment and its component parts shall be new and unused. All items of standard manufactured equipment shall be current models at the time of delivery. All parts subject to wear, breakage, or distortion shall be accessible for adjustment, replacement, and repair.

B. Means shall be provided to ensure adequate lubrication for all moving parts. All oil holes, grease fittings, and filler caps shall be accessible without the use of tools.

C. The design of the equipment shall be such as to provide for safe and convenient operation. Covers or other safety devices shall be provided for all items of equipment presenting safety hazards. Such guards or safety devices shall not present substantial interference to the operation of the equipment. All guards shall provide easy access to the guarded parts.

D. Trim shall not be an acceptable substitute for accuracy and neatness. When trim is required and accepted by the Consultant and the Owner in lieu of rejection of items of equipment, it shall be the K.E.C.'s responsibility to provide same at no additional cost.

E. Unless otherwise specified herein, no material lighter than #20 gauge shall be incorporated into the work. All gauges for sheet iron and sheet steel shall be U.S. Standard Gauges, and finished equipment gauge thickness shall not vary more than 5% plus or minus from the thickness indicated below.

GAUGE	THICKNESS	GAUGE	THICKNESS
#10	0.1406	#16	0.0625
#12	0.1094	#18	0.0500
#14	0.0781	#20	0.0375

F. Materials or work described in words which have a well-known and acceptable trade meaning shall be held to refer to such accepted meanings.

2.02 MATERIALS

A. Refrigeration Systems:
   1. Self-contained:
      a. Whether the units be top-mounted or cabinet-mounted, they shall be started by the K.E.C. and shall be tested for maintenance of temperature.
      b. All units shall be furnished with condensate evaporators.
   2. Remote: Provide and install complete refrigeration system(s), charged, started, and operating properly, according to the Item Specifications and the following.
      a. Single stage compressors with air-cooled condensers operating within the recommended range of suction discharge pressure of economical operation and within the required capacity.
      b. All units shall be new and factory assembled, to operate with the refrigerant specified. Refrigerant R-404A shall be used for all medium and low temperature applications. Due to the unsettled nature of refrigerants, no refrigerant shall be used with a phase-out date of less than ten (10) years from the date of installation.
      c. Compressors shall be accessible hermetic type, Copeland or approved equal, and shall be equipped with high-low pressure control, liquid line drier, sight glass, suction and discharge vibration eliminator, and head pressure control.
      d. The system shall have a factory mounted and pre-wired control panel complete with main fused

disconnect, compressor circuit breakers, contactors, and time clocks wired for single point power connection.

e. The supporting frame shall be constructed of structural steel, fully welded, and protected against rust and corrosion with one (1) coat primer, and two (2) coats paint, unless otherwise specified.

f. Systems specified for outdoor installation shall be fully protected in a weather-proofed housing with louvered front panel and hinged top, constructed to resist rust and corrosion, and furnished with low ambient controls. Crankcase heater shall be provided with every compressor.

3. Where specifications call for pre-piped lines (i.e., from a fixture to a valve compartment, etc.), provide such work in strict conformance with other sections of the specifications which set forth standards for this type of work or in conformity with the requirements of the Board of Fire Underwriters or ASHRAE Standards, whichever is greater.

4. Each refrigeration item specification is written to provide minimum specifications and scope of work. All refrigeration equipment shall be designed and installed to maintain the following general temperatures unless otherwise specified.

TYPE		REFRIGERATORS	FREEZERS
a.	Walk-In	+35º F./1.7º C.	-10º F./-23.3º C.
b.	Reach-In	+35º F./1.7º C.	-10º F./-23.3º C.
c.	Undercounter	+35º F./1.7º C.	-10º F./-23.3º C.
d.	Fabricated	+35º F./1.7º C.	-10º F./-23.3º C.
e.	Cold Pans	+0º F./-17.8º C.	
f.	Work Rooms	+50º F./10º C.	

5. Provide (including payment if subcontracted) all electrical and refrigeration components needed by the completed system and complete (or have completed by the respective trades) all connections of and to said components.

6. An evaporator coil defrost system shall be provided and installed by the K.E.C. on all refrigeration systems designed to operate at an evaporator coil temperature of less than +35º F. Evaporator coil units provided without electric defrost feature shall be installed with a solenoid valve in the liquid line, controlled by the time clock so as to shut off the flow of refrigerant and allow the compressor to pump down and shut off by activation of the pressure control switch.

7. Verify the requirements of and provide any or all additional refrigeration specialty(s) or component(s) required or recommended by the manufacturer for proper operation under the specific operating conditions and location of each system specified.

8. Verify and provide manufacturer's certification that the equipment selection hereinafter specified for each refrigeration system is properly sized and shall meet the operating requirements set forth for each system regarding maintaining specified operating temperature, hours of compressor running time, and system pressures and velocities as recommended by the equipment manufacturer(s).

9. All refrigeration systems shall be installed and wired in strict conformance with the manufacturer's instructions and recommendations.

B. Motors and Heating Elements:

1. Motors up to and including 1/2 HP shall be wired for 120 volt, single phase service. Motors larger than 1/2 HP shall be wired for 208 volt, single or three phase service as indicated. Motors shall be of the drip-proof, splash-proof, or totally enclosed type, having a continuous duty cycle and ball bearings, except small timing motors which may have sleeve bearings. All motors shall have windings impregnated to resist moisture. Motors located where subject to deposits of dust, lint, or other similar matter shall be of the totally enclosed type. Motors shall have ample power to operate the machines for which designated under full load operating conditions without exceeding their nameplate ratings. Insulation shall be N.E.M.A. Class B or better.

2. Heating elements having a connected load up to and including 1,000 watts shall be wired for 120 or 208 volt, single phase service, or as indicated on the drawings.

a. Any heating element larger than 1,000 watts or any combination of elements in one fixture totaling more than 1,000 watts shall be wired for 208 volt single or three phase service, as indicated on the drawings.

b. Fixtures having multiple heating elements may be wired for three phase service with the load balanced as equally as possible within the fixture.

C. Switches and Controls:

1. Provide recognized commercial grade signals, "on-off" pushbuttons or switches, and other speed and temperature controls as required for operation of each item, complete with pilot lights and permanent graphics, conspicuously labeled, to assist the user of each item.
2. Mount switches and controls directly adjacent the piece of equipment for which it involves, on operator's side of counter body apron, out of view to the public.
3. Provide on or for each motor-driven appliance or electrical heating or control unit, a suitable control switch or starter of the proper type and rating and in accordance with Underwriter's Code wherever such equipment is not built in. All other line switches, safety cut-outs, control panels, fuse boxes, other control fittings and connections, when not an integral part of the unit or furnished loose by the manufacturer will be furnished and installed by the Electrical Contractor, unless otherwise specified. All electrical controls, switches, or devices provided loose for field installation as a part of the item specified shall be installed in the field by the Contractor unless otherwise specified.
4. Appliances shall be furnished complete with motors, driving mechanisms, starters, and controllers, including master switches, timers, cut-outs, reversing mechanisms, and other electrical equipment if and as applicable.

D. Cover Plates:
1. All controls mounted on vertical surfaces of fixtures shall be set into recessed die stamped stainless steel cups, or mounted onto removable cover plates in such a fashion as to not protrude or interfere with the operation of each item.
2. Cover plates shall be furnished and installed for all electrical outlets, receptacles, switches and controls furnished by the K.E.C., and shall match the material and finish of the equipment to which they will be fastened.

E. Wiring and Conduit:
1. Wiring shall be properly protected in N.E.M.A. and U.L. approved metal enclosures. Only rigid steel conduit shall be used, zinc coated where unexposed and chrome plated where exposed. All wiring shall be run concealed wherever possible.
2. All equipment furnished under this contract shall be so wired, wound, or constructed so as to conform with the electrical characteristics at the job site.
3. Wiring and connection diagrams shall be furnished with electrically operated machines and for all electrically wired fabricated equipment.
4. Furnish all foodservice equipment completely wired internally using wire and conduit suitable for a wet location. Where an Electrician's services are required, the work shall be done in the K.E.C.'s factory or at his expense at the job site at no additional cost to the Owner. Provide all electrical outlets and receptacles required to be mounted on or in fabricated equipment and interconnect to a master circuit breaker panel with all wires neatly tagged showing item number, voltage characteristics, and load information. Final connection shall be made by the Electrical Contractor.

F. Cords, Plugs, and Receptacles:
1. The Electrical Contractor shall provide three- or four-wire, grounding-type receptacles for all wall and floor mounted outlets to be used for plug-in equipment with characteristics as noted on the drawings. Provide Hubbell three-wire or four-wire grounding-type connectors and neoprene cords installed on each item of plug-in equipment, as indicated on drawings and item specifications.
2. K.E.C. shall coordinate with the Electrical Contractor so that the receptacles provided will match the specific plugs provided as part of the plug-in equipment. Any changes in cords and plugs required in the field due to lack of coordination between the Electrical Contractor and the K.E.C. shall be the latter's responsibility.
3. Reduce the length of all cords furnished with the specified equipment to a suitable or appropriate length so they do not interfere with other equipment or operations.
4. Pedestal receptacles that are part of fabricated equipment exposed to view, shall be similar to T&S Model #B-1508DD single face, single gang or Model #B-1528DD single face, double gang.

G. Water Inlets:
1. Water inlets shall be located above the positive water level wherever possible to prevent siphoning of liquids into the water supply system. Wherever conditions shall require a submerged inlet, a suitable type of check valve (except in jurisdictions where check valves are prohibited) and vacuum breaker shall be placed on the fixture to form a part of same to prevent siphoning. Where exposed to view, piping and fittings shall be chrome-plated.

H. Drain Lines:
1. Plumbing Contractor shall provide and install indirect waste lines from equipment which will discharge into floor drains or safe wastes in accordance with Plumbing Rough-In Plans, chrome-plated where exposed. Extend to a point at least 1" (or as required by local codes) above the rim of the floor drain, cut bottom on 45º angle and secure in position.
2. All horizontal piping lines shall be run at the highest possible elevation and not less than 6" above finished floor, through equipment where possible.
3. No exposed piping in or around fixtures or in other conspicuous places shall show tool marks of more than one thread at the fitting.
4. All steam operating valves on or in fabricated and purchased foodservice equipment shall be provided with composition hand wheels, which shall remain reasonably cool in service.
5. Provide suitable pressure regulating valves for all equipment with such components that might reasonably be expected to be affected over a period of time by adverse pressure conditions.

I. Faucets, Valves and Fittings:
1. All sinks shall be fitted with chromium plated, swing spout faucets of same manufacturer throughout as follows, or otherwise specified in Item Specifications.
   a. Prep and Utility Sinks:
      1.) Splash-Mounted:
         a.) T&S Brass and Bronze Works, Inc., Model #B-231.
         b.) Fisher Manufacturing Company, Model #3253.
      2.) Deck-Mounted:
         a.) T&S Brass and Bronze Works, Inc., Model #B-221.
         b.) Fisher Manufacturing Company, Model #3313.
   b. Pot Sinks:
      1.) Splash-Mounted:
         a.) T&S Brass and Bronze Works, Inc., Model #B-290.
         b.) Fisher Manufacturing Company, Model #5214.
2. Pre-Rinse Assemblies:
   a. Splash-Mounted:
      1.) T&S Brass and Bronze Works, Inc., Model #B-133 with #B-109 wall bracket.
      2.) Fisher Manufacturing Company, Model #2210 with #2902-12 wall bracket.
   b. Deck-Mounted:
      1.) T&S Brass and Bronze Works, Inc., Model #B-143 with #B-510 mixing valve and #B-109 wall bracket.
      2.) Fisher Manufacturing Company, Model #2810 with #2805-CV mixing valve and #2902-12 wall bracket.
3. Vacuum Breakers:
   a. General Use:
      1.) Fisher Manufacturing Company, Model #3990-8000.
   b. Disposers:
      1.) Splash-Mounted:
         a.) T&S Brass and Bronze Works, Inc., Model #B-455.
         b.) Fisher Manufacturing Company, Model #3990.
      2.) Deck-Mounted:
         a.) T&S Brass and Bronze Works, Inc., Model #B-456.
         b.) Fisher Manufacturing Company, Model #3991.
4. Trough Inlets:
   a. Fisher Manufacturing Company, Model No. #2905.
5. Other specialty faucets, pre-rinse assemblies, vacuum breakers, and trough inlets, as specified under Item Specifications.
6. All sink compartments shall be fitted with 2" NPT male, chrome-plated, brass rotary waste valves complete with overflow assemblies and stainless steel strainers.
   a. Prep and General Utility Sinks:
      1.) Fisher Manufacturing Company, Model #6100.
   b. Pot Sinks:
      1.) Fisher Manufacturing Company, Model #6102.
7. Refer to Division 22 for all other fittings.

J. Metals and Alloys:
1. Stainless steel sheets shall conform to ASTM 240, Type 302, Condition A, 18-8, of U.S. Standard Gauges as previously indicated under paragraph 2.1.E.
   a. All exposed surfaces shall have a No. 4 finish. A No. 2B finish shall be acceptable on surfaces of equipment not exposed to view.
   b. All sheets shall be uniform throughout in color, finish, and appearance.
   c. Rolled shapes shall be of cold rolled type conforming to ASTM A36.
2. Stainless steel tubing and pipe shall be Type 304, 18-8, having a No. 4 finish, and shall conform to either ASTM A213 if seamless or ASTM A249 if welded.
3. Where galvanized metal is specified, it shall be copper-bearing galvanized iron, cold-rolled, stretcher leveled, bonderized, re-rolled to insure a smooth surface, and used in the largest possible sizes with as few joints as necessary.
4. Galvanizing shall be applied to rolled shapes in conformance with ASTM A123, and to sheets in conformance with ASTM A526, coating designation G-90.

K. Castings:
1. Castings shall consist of corrosion resisting metal (white metal) containing not less than 30% nickel. All castings shall be rough ground, polished, and buffed to bright lustre and free from pit marks, runs, checks, burrs, and other imperfections. In lieu of corrosion resisting metal castings, die-stamped or cast 18-8 stainless steel will be acceptable.

L. Hardware and Casters:
1. All hardware shall be of heavy duty type, satin finished chromium plated brass, cast or forged or highlighted stainless steel of uniform design. All hardware shall be a well-known brand, and shall be identified by the manufacturer's name and model number for easy replacement of broken or worn parts.
2. Casters on custom-built equipment shall be heavy duty type, ball bearing, solid or disc wheel, with grease-proof rubber, neoprene, or polyurethane tire. Wheel shall be 5" diameter, minimum width of tread 1-3/16", minimum capacity per caster 250 pounds, unless otherwise noted.
   a. Solid material wheels are to be provided with stainless steel rotating wheel guard.
   b. All casters shall have sealed wheel and swivel bearings, polished plated finish and be N.S.F. approved.
   c. All equipment specified with casters shall have a minimum of two (2) with brakes installed on opposite corners, unless otherwise noted.

M. Locks:
1. When specified, doors and drawers of all custom fabricated or manufactured equipment shall be provided with cylinder locks, disc tumbler type with stainless steel faceplate as manufactured by Standard-Keil Mfg. Co., or approved equal.
   a. Provide two (2) sets of keys for each lock.
   b. All locks shall be keyed alike, except at cashiers stations or unless otherwise specified.

N. Thermometers:
1. All fabricated refrigerated compartments shall be fitted with exterior mounted, adjustable, dial or digital thermometers with flush bezels, and shall be calibrated after installation.

O. Sealants:
1. Sealant, wherever required, shall conform to ASTM C 920; Type S Grade NS, Class 25, Use Nt, with characteristics that when fully cured and washed meets requirements of Food and Drug Administration Regulation 21 CFR 177.2600 and N.S.F. RTV-732 for use in areas where it comes in contact with food.
2. Dow-Corning #780 or General Electric "Silastic", or approved equal, in either clear or approved color to match surrounding surfaces and applied in accordance with sealant manufacturers recommendations for a smooth, sealed finish.

P. Millwork:
1. All millwork materials shall be free from defects impairing strength, durability, or appearance; straight and free from warpage; and of the best grade for their particular function. All wood shall be well-seasoned, kiln dried, and shall have an average moisture content of 8%, a max. of 10% and a min. of 5%.
2. Plywood and other woodwork of treatable species, where so required by code, shall be fire-retardant treated to result in a flame spread rating of 25 or less with no evidence of significant progressive combustion when

tested for 30 minutes duration under ASTM E84 and shall bear the testing laboratory mark on the surface to be concealed.

3. Concealed softwood or hardwood lumber shall be of poplar, douglas fir, basswood, red oak, birch, maple, beech or other stable wood and shall be select or better grade, unselected for color and grain, surfaced four sides, square-edged, and straight. Basswood may be used where fire-retardant materials are required.
4. Plywood for transparent finish shall conform to U.S. Product Standard PS-51-71, Type I (fully waterproofed bond), with architectural grade face veneers of species as specified, free of all pin knots, patches, color streaks and spots, sapwood, and other defects. Plywood designated to have plywood cores shall be of either 5 or 7 ply construction. Plywood so designated on the drawings and plywood not otherwise shown shall have a particleboard core, cross banding of veneers, and face and back veneers. Particleboard cores shall have a 45-pound density, except where the fire retardant treatment requires cores of lesser density.
5. Face veneers shall be matched for color and grain to produce balance and continuity of character. Mineral streaks and other discolorations, worm-holes, ruptured grain, loose texture, doze, or shake will not be permitted. Face veneer leaves on each surface shall be full-length, book-matched, center-matched, and sequence-matched. Surfaces shall be sequence and blueprint matched. Veneers not otherwise indicated shall be plain sliced. Backing veneers for concealed surfaces shall be of a species and thickness to balance the pull of the face veneers.
6. Hardwood plywood for painted surfaces shall conform to U.S. Product Standard PS-51-71, Type I, and shall have sound birch, maple or other approved close grain hardwood faces suitable for a paint finish.
7. Perforated hardboard shall be a tempered hardboard, 1/4" thick, conforming to Federal Specification LLL-B-810B, Type I, SIS, Finish B (primed), Design B (perforated), with 1/4" diameter holes spaced on 1" centers both ways.
8. Plywood for laminate assemblies shown or specified with plywood core shall be of the 5 or 7 ply construction with sanded close-grain hardwood face and back veneers, laminated with waterproof glue, in thickness shown, conforming to U.S. Product Standard PS-51-71.
9. Particle board for plastic laminate assemblies shown or specified with particle board wood core shall conform to U.S. Product Standard CS-236-66, Type 1, or 2, Grade B (45 pound density), class 2: except where fire-retardant treatment is required the density shall conform to the treatment requirements.

Q. Plastic Laminate:
1. Plastic laminate surfaces shall be laminated with thermosetting decorative sheets of the color, pattern, and style as selected by the Architect.
   a. Horizontal surfaces shall be laminated with sheets conforming to Federal Specification L-P-508F, Style D, Type I (general purpose), Grade HP, Class 1, 1/16" thick, satin finish, with rough sanded backs.
   b. Vertical surfaces shall be laminated with sheets conforming to Federal Specification L-P-598F, Style D, Type II, (vertical Surface), Grade HP, Class 1, non-forming, satin finish, 1/32" thick or heavier.
   c. Curved surfaces shall be laminated from sheets conforming to Federal Specification L-P-508F, Style D, Type III (post-forming), Grade HP, Class 1, satin finish.
   d. Balance sheets for backs in concealed locations shall be either reject material of the same type and thickness as the general purpose grade facing or may be .020" thick laminate backing sheets conforming to Federal Specification L-P-00508E, Style ND, Type V (backing sheet), Grade HP.
2. Adhesives:
   a. For application of plastic laminate to wood substrates of horizontal surfaces shall be a phenolic, resorcinol, or melamine adhesive conforming to Federal Specification MMM-A-181C, producing a waterproof bond.
   b. For applying plastic laminate to vertical surfaces shall be either a waterproof type or a water-resistant type such as a modified urea-formaldehyde resin liquid glue conforming to Federal Specification MMM-A-188C.
   c. Contact adhesive will not be acceptable.

2.03 FABRICATION AND MANUFACTURE

A. Materials and Workmanship:
1. Unless otherwise specified or shown on drawings, all materials shall be new, of best quality, perfect, and without flaws. Material shall be delivered and maintained on the job in an undamaged condition.

2. Fabrication shall be equal to the standards of manufacture used by all first class equipment manufacturers, performed by qualified, efficient, and skilled mechanics of the trades involved.
3. All items of standard equipment shall be the latest model at time of delivery.
4. All fabricated work shall be the product of one manufacturer of uniform design and finish.
5. Each fabricated item of equipment shall include all necessary reinforcing, bracing, and welding with the proper number and spacing of uprights and cross members for strength.
6. Wherever standard sheet sizes will permit, the tops of all tables, shelves, exterior panels of cabinet type fixtures, and all doors and drainboards shall be constructed of a single sheet of metal.
7. Except where required to be removable, all flat surfaces shall be secured to vertical and horizontal bracing members by welding or other approved means to eliminate all buckle, warp, rattle, and wobble. All equipment not braced in a rigid manner and which is subject to rattle and wobble shall be unacceptable, and the K.E.C. shall add additional bracing in an approved manner to achieve acceptance.

B. Sanitary Construction:
1. All fabricated equipment shall be constructed in strict compliance with the standards of the National Sanitation Foundation as outlined in their Bulletin on Food Service Equipment entitled "Standard No. 2" dated October 1952, and in compliance with the local and State Public Health Regulations in which the installation will occur.
2. All fabricated equipment shall bear the N.S.F. "Seal of Approval".

C. Construction Methods:
1. Welding:
   a. All welding shall be the heliarc method with welding rod of the same composition as the sheets or parts welded. Welds shall be complete, strong, and ductile with excess metal ground off and joints finished smooth to match adjoining surfaces; free of mechanical imperfections such as gas holes, pits, cracks, etc., and shall be continuously welded so that the fixtures shall appear as one-piece construction. Butt welds made by spot solder and finished by grinding shall not be acceptable.
   b. Spot welds shall have a maximum spacing of 3". Tack welds shall be of at least 1/4" length, and spaced no greater than 4" from center to center. Weld spacing at the ends of the channel battens shall not exceed 2" centers.
   c. In no case shall soldering be considered as a replacement for welding, nor shall any soldering operation be done where dependence is placed on stability and strength of the joint.
   d. Fixtures shall be shop fabricated of one piece and shipped to the job completely assembled wherever possible. Equipment too large to transport or enter the building in one piece shall be constructed so that the field joints can be welded at the job site.
   e. All exposed joints shall be ground flush with adjoining material and finished to harmonize therewith. Whenever material has been sunk or depressed by welding operation, depression shall be suitably hammered and peened flush with the adjoining surface and ground to eliminate low spots. In all cases the grain of rough grinding shall be removed by successive fine polishing operations.
   f. All unexposed welded joints on undershelves of tables or counters of stainless steel shall be suitably coated at the factory with an approved metallic-based paint.
   g. After galvanized steel members have been welded, all welds and areas where galvanizing has been damaged shall have a zinc dust coating applied in conformance with Military Specification Number MIL-P-26915.
2. Joints:
   a. Butt joints and contact joints wherever they occur, shall be close fitting and shall not require a filler. Wherever break bends occur, they shall be free of undue extrudence and shall not be flaky, scaly, or cracked in appearance; where such breaks do mar the uniform surface appearance of the material, all such marks shall be removed by suitable grinding, polishing, and finishing. Wherever sheared edges occur, they shall be free of burrs, fins, and irregular projections and shall be finished to obviate all danger of laceration when the hand is drawn over them. In no case shall overlapping materials be acceptable where miters or bullnosed edges occur.
   b. Field welded joints shall be ground smooth without dips and irregularities and finished to match original finish.
3. Bolt, Screw and Rivet Construction:
   a. All exposed surfaces shall be free from bolt and screw heads. When bolts are required, they shall be of the concealed type and be of similar composition as the metal to which they are applied.
   b. Where bolt or screw threads on the interior of fixtures are visible or may come into contact with hands

or wiping cloths, they shall be capped with a stainless steel or chrome acorn nut and stainless steel lock washer.

c. If rivets are used to fasten rear paneling to the body of the fixture, such rivets shall be stainless steel. In no case shall iron rivets be used.

4. Sound Deadening:
   a. Schnee Butyl-Sealant 1/2" wide rope continuously between all frame members and underside of stainless steel table tops, overshelves and undershelves.
   a. Tighten stud bolts for maximum compression of sealant.
5. Hi-Liting:
   a. All horizontal edges of stainless steel tops, splashes, tops of raised rolled rims, and edges of all exposed doors, handles and shelf edges shall be hi-lited, in uniform design by grinding with abrasive not coarser than #240 grit, then polishing with compound to a uniform mirror finish.
6. Polishing:
   a. The grain of polishing shall run in the same direction on all horizontal and on all vertical surfaces of each item of fabricated equipment except in the case where the finish of the horizontal sections of each shall terminate in a mitered edge.
   b. Where sinks and adjacent drainboards are equipped with backsplash, the grain of the polishing shall be consistent in direction throughout the length of the backsplash and sink compartment.
7. Finishes:
   a. Paint and coatings shall be of an N.S.F. approved type suitable for use in conjunction with foodservice equipment. Such paint or coating shall be durable, non-toxic, non-dusting, non-flaking and mildew resistant, shall comply with all governing regulations, and shall be applied in accordance with the manufacturers recommendations.
   b. All exterior, galvanized parts, exposed members of framework, and wrought steel pipe where specified to be painted shall be cleaned, primed with rust inhibiting primer, de-greased, and finished with two (2) coats of glossy enamel grey hammertone paint, unless otherwise noted.
   c. Where baked enamel finishes are specified, they shall be oven baked on the fixtures for a minimum of 1-1/2 hours at a minimum temperature of 300º F.
   d. Fabricated equipment shall be spray coated with plastic suitable for protecting the equipment during transport and installation. The coating shall be easily removable after the equipment installation is complete at the job site, and final clean-up has begun.

D. Construction:
1. Legs:
   a. All tubular stands for open base tables, sinks, or dishtables shall have legs constructed of 1-5/8" O.D. stainless steel tubing, with 1-1/4" O.D., #16 gauge stainless steel crossbracing running between legs at a point 10" above finished floor.
   b. All joints between legs and crossbracing shall be welded and ground smooth, full 360º.
   c. The top end of legs shall be closely fitted into fully-enclosed stainless steel conical gussets no less than 3" high, similar to Klein #481-58 or #483-58, or approved equal.
   d. Gussets shall be fully welded to framing reinforcing members, so that, set screw is not visible from front.
   e. Legs without crossrails will not be accepted.
   f. Legs shall be spaced at not more than 5'-6" on centers, unless otherwise specified.
2. Feet:
   a. All tubular legs will be swedged for appearance and close fit to United Show Case #BF-158, or approved equal, fully enclosed, stainless steel bullet-shaped foot.
      1.) The foot shall be threaded into a collar and completely welded inside the tubular leg to permit a maximum adjustment of 2" without any thread exposure.
      2.) Threads shall be National Course Series Class 2 fit or better, machined to prevent end play when foot is at maximum adjustment.
      3.) The bullet-shaped foot shall have slightly rounded bottom to protect the floor, and a minimum bearing surface of 3/4" diameter of stainless steel-to-floor contact.
      4.) Bottom of tubular leg shall be finished off smoothly to provide a sanitary fitting and prevent the accumulation of grease or other debris.
   b. Cabinet type fixtures shall be mounted on 8" high die-stamped, sanitary, two-piece stainless steel legs no less than 2-3/4" in diameter at the top, Component Hardware #A72-0811, or approved equal.
      1.) The bottom fully enclosed, stainless steel, bullet-shaped foot threads up into the inside of the

upper member, with a male threaded 5/8" bushing to permit maximum adjustment of 2" without thread exposure.

2.) The upper section shall be stamped in a neat design with a flared inverted shoulder and fully welded to a base plate designed for anchoring to the channel underbracing.

3. Table Tops:
   a. Tables shall be constructed of stainless steel, and of a thickness not less than #14 gauge with 1-3/4" by 120º rolled edges, or as otherwise specified and detailed.
   b. All corners shall be bull-nosed and of the same radius as rolled edges.
   c. Joints where required shall be butt-welded and ground smooth to present a uniform one-piece appearance.
   d. All tops shall be reinforced on the underside with a fully welded framework of 1-1/2"x1-1/2"x1/8" galvanized steel angles with the framing extending around the top perimeter and crossbraced on 24" maximum centers.
   e. 1"x4"x1" galvanized or stainless steel, fully welded, cross channel, closed end members placed at each pair of legs with one (1) channel running lengthwise will also be acceptable.
   f. All tops shall be reinforced so that there will be no noticeable deflection.
   g. Metal tops where adjacent to walls or other items of equipment, shall be constructed with integral, coved, back and/or endsplashes as required and specified in accordance with the standard details contained herein. Close all ends of splashes.
4. Enclosed Bases:
   a. All enclosed bases or cabinet bodies shall be of seamless #18 gauge stainless steel construction, enclosed on the ends and sides as required and called for under each item.
   b. Ends of body shall terminate at front or operator's side in a 2" wide mullion, vertical, and completely enclosed. All intermediate mullions shall be completely enclosed.
   c. The bases shall be reinforced at the top with a framework of 1-1/2"x1-1/2"x1/8" galvanized angles, with all corners mitered and welded solid.
   d. Underside of top shall be reinforced with channels and gussets where necessary. Additional angles and cross members shall be provided to reinforce shelves and support tops under heavy tabletop equipment.
   e. Where sinks or other drop-in equipment occur, provide additional reinforcing extending crosswise, both sides of opening.
   f. In the case of fixtures fitting against or between walls, the bodies shall be set in 1" or 2" from the wall line, with the tops continuing to the wall line with integral, coved splashes as specified. Extend vertical face of body to the wall line only. This will permit adjustment to wall irregularities. Vertical trim strips will not be accepted.
   g. Bodies shall be fitted with counter style stainless steel legs as hereinbefore specified.
5. Drawers:
   a. Drawers, where specified, shall have removable pan inserts of #18 gauge stainless steel, and shall be approximately 20"x20"x5" deep unless otherwise specified.
      1.) Perimeter top edge shall be flanged out 1/2".
      2.) All interior horizontal corners shall be rounded on a 1" radius, and all interior vertical corners shall be rounded on a 2" radius.
   b. Fronts shall be double pan #16 gauge stainless steel construction, 1" thick, insulated with a semi-rigid, fiberglass board, un-faced, having a three-pound density.
      1.) The top of the drawer face shall be formed as an integral pull by breaking the front pan back on a 45º angle 1", then straight up 1", back to front 1", and then down at the front 3/4".
      2.) Drawer front shall have all edges and corners ground smooth with a radius edge pull.
   c. The drawer shall have an all welded frame of 1"x1", #16 gauge stainless steel angles sized to fit the removable pan insert.
   d. Drawers shall operate on #12 gauge slides with roller bearings with hardened and ground raceways, Grant, Model #3320, or approved equal. Slides shall be pitched approximately 3/8" per foot to permit self-closing action.
   e. Drawers shall be adequately and neatly fitted to the guides to permit easy operation without rattle or binding.
   f. Slides and frame shall be reinforced to support a dead weight of 150 pounds when drawer is fully extended.
   g. Adjustable stops shall be provided for each drawer at the fully-opened position, and be readily lift-able by hand for easy removal of drawer.

h. All drawers not mounted inside a cabinet body shall be completely enclosed in an #18 gauge stainless steel box-type enclosure and suspended from angle framing under the fixture top. The housing bottom shall be flanged and welded to an #18 gauge stainless steel reinforcing channel extending across the open end.

6. Sliding Doors:
   a. Sliding doors shall be of the double pan type, with the exterior pan constructed of &2#18 gauge stainless steel with all four sides channeled and corners welded. The interior pan shall be similarly constructed of #20 gauge stainless steel, set into the exterior pan, and welded in place.
   b. All doors shall be insulated with semi-rigid fiberglass board, un-faced, having a three-pound density. Styrofoam shall not be acceptable.
   c. Doors 18" wide or greater, shall have internally welded 4" wide reinforcing channels to prevent warpage.
   d. Each door shall be fitted with a positive flush-type stainless steel pull, Standard-Kiel #1262-1014-1283 recessed handle, or approved equal.
   e. In the back of each door install a 1"x1", #16 gauge stainless steel angle stop welded in a suitable location to prevent the doors from overpassing the flush pulls.
   f. Doors in the closed position shall overlap each other by no more than 2".
   g. Each door shall be fitted with two (2), 1-3/8" ball bearing sheaves fastened to 1"x1/8" stainless steel bar stock welded to the top corners of each door for suspending on an overhead #16 gauge stainless steel channel track. The hangers shall be tapped for 1/4"-20 thumb screw vertical locks which prevent the doors from jumping the track in operation while permitting easy removal for cleaning without tools.
   h. Insure that the bottom of the doors are positively and continuously guided to assure proper alignment and passing regardless of the position of each door.
   i. Provide hard rubber bumpers for doors to close against to insure quiet operation.
7. Hinged Doors:
   a. Hinged doors shall be of the same materials and construction as sliding doors previously specified.
   b. Hinges shall be heavy duty, stainless steel, removable type, and fastened by tapping into 1/4"x3/4" stainless steel bar stock inside the door pan and behind the door jamb.
   c. The door face shall be flush with the cabinet body when fully closed.
   d. Size widths of doors equally when installed in pairs, or in series with other pairs, with no door being greater than 36" in width.
   e. Doors shall be held closed by permanent magnetic closure devices of an approved type and of sufficient strength to hold the doors shut. Install two (2) per door (minimum), mounted to the door jamb, top and bottom, with opposing chrome-plated steel plates securely fastened to the inner panel of the doors.
8. Undershelves:
   a. All open base tables shall be provided with full-length undershelves of #16 gauge stainless steel fully welded to legs with all joints ground smooth and polished.
   b. Front edge shall turn down 1-1/2" and under 1/2".
   c. Turn up rear and ends 2", with integral coved radius, when specified.
   d. If required by width, provide 1-1/2"x1-1/2"x1/8" galvanized angle bracing mounted to underside, full length.
9. Interior Shelves:
   a. All interior shelves within cabinet bodies, enclosed bases and overhead cabinets, shall be of #16 gauge stainless steel.
   b. Removable shelves shall be constructed in equal sections, and rest in 1-1/2"x1-1/2"x1/8" stainless steel angle frame. Cove all horizontal corners in accordance with N.S.F. requirements.
   c. Stationary shelves shall have 2" turn-up on back and ends, and continuously welded to cabinet body, polished and ground smooth to form a one-piece interior free of any crevices.
   d. Front edge shall turn down 1-1/2" and under 1/2", and finished with "z" bar forming completely enclosed edge for maximum strength and sanitation.
   e. Provide 1-1/2"x1-1/2"x1/8" angle bracing mounted to underside, full length.
10. Elevated Shelves:
   a. Shelves over equipment not adjacent to a wall shall be mounted on 1" diameter #16 gauge stainless steel tubular standards neatly fitted with stainless steel base flanges, unless otherwise specified.
   b. The top of the tubular standards shall be completely welded to #14 gauge stainless steel support channels, full width of overshelf.

c. Inside the tubular standard, and welded to same, provide 1/2" diameter steel tension rod extended through countertop and securely anchored to lower framework reinforcing with nuts and lock washers in such a manner as to assure a stable, sway-free structure.
d. If required by width, provide 1-1/2"x1-1/2"x1/8" stainless steel angle bracing mounted to underside, full length.
e. Cantilevered shelves, when called for, shall be #16 gauge stainless steel supported on #14 gauge stainless steel brackets welded to 1-5/8" O.D. stainless steel tubular standards extending through the backsplash, and fully welded to the table framework. Provide Klein #481-SH welded sleeves where standards penetrate backsplash.

11. Wall Shelves:
    a. Open wall shelves shall be constructed of #16 gauge stainless steel with back and ends turned up 2", positioned 2" out from face of wall, with all corners welded, and supported on #14 gauge stainless steel brackets.
    b. Brackets shall be flanged inward beneath the shelf and at the wall 1-1/2" with intersecting flanges completely welded, and attached to shelf with studs welded to the underside and bolted with stainless steel lock washers and chrome-plated cap nuts.
    c. Each bracket shall be fastened to the wall with a minimum of two (2) 1/4"-20 stainless steel bolts anchored securely by means of toggles or expansion shields.
12. Sinks:
    a. All sinks shall be the size and shape as shown on drawings, and constructed of #14 gauge stainless steel with backs, bottoms and fronts formed of one continuous sheet and the ends welded in place.
    b. Sinks shall have all corners, both vertical and horizontal, coved on a 3/4" radius electrically welded, ground smooth and polished. Solder in filleted corners will not be acceptable.
    c. Multiple compartment sinks shall be divided with double wall, #14 gauge stainless steel partitions with a 1/2" radius on top and all corners rounded as other corners, continuously welded, ground smooth and polished.
    d. The bottom of each compartment shall be creased to a die stamped recess, tapered and shaped to receive a lever type waste without the use of solder, rivets, or welding.
    e. Provide #14 gauge stainless steel waste lever angle bracket mounted to underside of compartment at front.
    f. The front and exposed ends of sinks shall be fabricated with a 1-1/2", 180º rolled edge. The back and ends adjacent to walls or other fixtures shall be turned up with integral coved edge 12" high and returned 2-1/2" at the top on a 45º angle. Cap ends of all exposed splashes.
    g. Unless otherwise specified, two (2) faucet holes on 8" centers shall be provided, located over the center line of partitions between compartments, 2-1/2" down from splash break.
    h. Gussets for legs shall be fully welded all around to #12 gauge stainless steel triangular plates fully welded to underside of sink.
    i. Sinks fabricated into working surfaces shall be constructed of the same material and in like manner to sinks specified above, except rolled edge and backsplash shall be omitted and the bowl shall be completely welded integral and flush with the working surface. Where basket type wastes are called for, they shall be fitted with removable seats.
    j. Where sink bowls are exposed, the exterior shall also be polished to a #4 finish.
13. Sink Drainboards:
    a. Drainboards shall be constructed of the same material as the sinks and shall be welded integral to same.
    b. The front portion of drainboards shall continue the 1-1/2", 180º rolled edge of sink bowls on a continuous and level horizontal plane.
    c. The surface of the drainboard shall pitch from 2-1/2" at the end furthest from the sink, to 3" at the bowl; or 1/8" per foot. In addition, the bottom surface shall be dished toward the center for complete drainage.
    d. The backsplash of the drainboard shall match the rear of the sink contour and shall be welded integral thereto, running parallel to the floor.
    e. Drainboards shall be reinforced on the underside with a framework of 1"x4"x1" stainless steel channel underbracing placed at each pair of legs, with exposed ends capped, and one (1) channel running lengthwise.
    f. Where disposer cones are fabricated into drainboards, additional 1"x4"x1" stainless steel channels shall be welded into the top framing, spanning the drainboard from front-to-back on both sides of the cone and located not more than 3" to either side.

g. Disposer control panels or switches shall be supported beneath drainboards, when specified, by means of a #12 gauge stainless steel mounting bracket.

14. Dishtable Tops:
    a. Dishtables shall be constructed of #14 gauge stainless steel with all corners, both vertical and horizontal, coved on a 3/4" radius electrically welded, ground smooth and polished. Solder in filleted corners will not be acceptable.
    b. Fronts and exposed ends shall be fabricated with a 3" high, 1-1/2", 180º rolled edge with rounded corners. The back and ends adjacent to walls or other fixtures shall be turned up with integral coved edge 12" high and returned 2-1/2" at the top on a 45º angle. Cap ends of all exposed splashes.
    c. All tops shall slope 1/8" per foot (minimum).
    d. Dishtables shall be reinforced on the underside with a framework of 1"x4"x1" stainless steel channel underbracing placed at each pair of legs, with exposed ends capped, and one (1) channel running lengthwise fully welded between front-to-back channels.
    e. Where tops fit into dishmachines, they shall turn down and into, forming a sealed watertight fit, and attached according to dishmachine manufacturers instructions.
    f. On each side of dishmachine, tables shall be provided with integral splash shields as part of the backsplash.
    g. Silicon filling of gaps caused by poor fit will not be acceptable.
    h. On corner-type door machines, provide #14 gauge stainless steel wall-mounted, splash panel to protect adjacent wall, full width of door opening.
15. Cafeteria Style Counters:
    a. All counters shall be constructed as previously specified under Enclosed Bases.
    b. Provide top and bottom framing for each counter food pan, cold pan, coffee urn, ice cream unit, ice bin, dish dispenser, etc., whether a drop-in unit or a cutout for a portable unit.
    c. Where plate shelves occur, frame horizontally 8-1/2" back from counter edge or as design dictates, and at bottom of shelf at counteredge.
    d. The countertop shall be constructed of #14 gauge stainless steel, as previously specified, with all joints welded, ground and polished.
    e. Fronts and exposed ends shall be stainless steel, plastic laminate or other material as noted in the Item Specifications.
    f. All display glass shelving shall be 1/4" polished plate glass and fully trimmed with #18 gauge stainless steel formed channels. Top shelves shall be the same width as the shelf below. Shelves shall be supported on 5/8" square, #16 gauge stainless steel perimeter tubing fully welded to 1-1/4" square, #16 gauge stainless steel tubing uprights.
    g. Provide appropriate adjustable glass sneeze or breath guards trimmed in stainless steel along front, entire length, mounted in Klein 4465-A brackets.
    h. Protector shelf over hot food wells shall be #16 gauge stainless steel supported on 1-1/4" square, #16 gauge stainless steel tubing uprights, with 1/4" polished plate glass front and end panels trimmed in #18 gauge stainless steel channels. When specified for self-service, mount bottom edge of front panel 8" above countertop.
    i. All display and protector shelves shall be furnished with full-length fluorescent lights wired to on/off switch in counter apron, with lamps and protective shields. Conceal all wiring in tubular uprights.
    j. Refer to Item Specification for changes, as required.
    k. Counter shall be internally wired complete by the K.E.C., and in such a way as to meet the requirements of the Electrical Code of the job location.

2.04 EQUIPMENT

A. All items listed on the Contract Documents under the heading "Equipment Schedule" shall be furnished in strict accordance with the foregoing specifications and with the following detailed Itemized Specifications.

B. Manufacturer's names and model numbers are shown establishing quality, size, and finish required, representing the Owner's and Consultant's requirements and basis for bid. Equipment is listed hereinafter with same item numbers as shown on Contract Documents.

PART 3 - EXECUTION

3.01 INSPECTION

A. Before beginning the installation of foodservice equipment, the spaces and existing conditions shall be examined by the K.E.C. and any deficiencies, discrepancies, or unsatisfactory conditions for proper installation of foodservice equipment shall be reported to the Architect in writing.
   1. Do not proceed with installation until unsatisfactory conditions have been corrected in a manner satisfactory to the installer.
   2. Beginning installation shall constitute acceptance of the area.

3.02 PREPARATION

A. Foodservice equipment drawings are diagrammatic and intended to show layout, arrangement, mechanical and electrical requirements.

B. Field verify all measurements at the building prior to fabrication of custom equipment. Coordinate measurements and dimensions with rough-in and space requirements.

3.03 INSTALLATION

A. The K.E.C. shall coordinate his delivery schedule with the Contractor to ensure adequate openings in the building to receive the equipment.

B. Equipment shall be un-crated, fully assembled and set level in position for final connections. Parts shipped loose but required for connection shall be properly tagged and shall be accompanied by the necessary installation instructions.

C. Provide a competent, experienced foreman to supervise installation and final connections with other trades.

D. Remote Refrigeration Systems:
   1. All refrigeration work where applicable to this contract shall be accomplished in an approved manner, using finest quality fittings, controls, valves, etc.
   2. Refrigeration items shall be started up, tested, adjusted, and turned over to the Owner in first class condition and left running in accordance with the manufacturer's instructions.
   3. Refrigeration lines and hook-ups shall be completed by the K.E.C. with the exception of electric, water, and drain line final connections unless otherwise specified.
   4. All copper tubing shall be refrigerant grade A.C.R. or type "L".
   5. Silver solder and/or Sil-Fos shall be used for all refrigerant piping. Soft solder is not acceptable.
   6. All refrigerant lines in pipe sleeves or conduit shall be effectively caulked at ends to prevent entrance of water or vermin and at penetrations through walls or floors.
   7. All tubing shall be securely anchored with clamps, and suspended lines shall be supported with adjustable hangers at 6'-0" o.c. maximum.
   8. Wrap drain line in freezer compartment(s) with approved heat-tape for final connection by Electrical Contractor.

E. Sealing and Caulking:
   1. Prior to the application of sealant, all surfaces shall be thoroughly cleaned and de-greased.
   2. Apply around each unit of permanent installation at all intersections with walls, floors, curbs or other permanent items of equipment.
   3. Joints shall be air-tight, water-tight, vermin-proof, and sanitary for cleaning purposes.
   4. In general, joints shall be not less than 1/8" wide, with backer rod to shape sealant bead properly at 1/4" depth. Shape exposed surfaces of sealant slightly concave, with edges flush with faces of materials at joint.
   5. At internal corner joints, apply sealant or gaskets to form a sanitary cove, of not less than 3/8" radius.
   6. Provide sealant-filled joints up to 3/4" in joint width. Trim strips for wider joints shall be set in a bed of sealant and attached with stainless steel fasteners, 48" o.c., or less, to insure suitable fastening and prevent buckling of the metals fastened.

F. Cutting:
   1. All cutting, fitting, or patching required during installation shall be accomplished by the K.E.C., at his own expense, so as to make the work conform to the plans and specifications.
   2. The K.E.C. shall not cut or otherwise alter, except with the consent of the Owner, the work of any other Contractor.

3. Provide cut-outs in foodservice equipment where required to run plumbing, electric, or steam lines through equipment items for final connections.

3.04 FIELD QUALITY CONTROL

A. Inspection:
1. Provide access to shop fabrication areas during normal working hours to facilitate inspection of the equipment, during construction, by the Architect or his authorized representative.
2. Errors found during these inspections shall be corrected to the extent required within the scope of the plans, specifications, and approved drawings.

B. Start-Up and Testing:
1. Delay start-up of foodservice equipment until service lines have been tested, balanced, and adjusted for pressure, voltage, and similar considerations; and until water and steam lines have been cleaned and treated for sanitation.
2. Before testing, lubricate each equipment item in accordance with manufacturer's recommendations.
3. Supply a trained person or persons who shall start up all equipment, test and make adjustments as necessary, resulting in each item of equipment, including controls and safety devices, performing in accordance with the manufacturer's specifications.
4. All gas-fired equipment shall be checked by the local gas company as to calibration, air adjustments, etc., and adjustments made as required.
5. Repair or replace any equipment found to be defective in its operation, including items which are below capacity or operating with excessive noise or vibration.

C. Demonstration:
1. Provide an operating demonstration of all equipment at a time of Owner's convenience, to be held in the presence of authorized representatives of the Architect and Owner.
2. Demonstration shall be performed by manufacturer's representative knowledgeable in all aspects of his equipment.
3. During the demonstration, instruct the Owner's operating personnel in the proper operation and maintenance of the equipment.
4. Furnish complete, bound, operation/maintenance manuals and certificates of warranty for all items of equipment provided, in accordance with Article 1.5 Submittals, Paragraph F, at this demonstration time.

3.05 ADJUST AND CLEAN

A. Upon completion of installation and tests, clean and sanitize foodservice equipment, and leave in condition ready for use in food service.

B. Remove all protective coverings, and thoroughly clean equipment both internally and externally.

C. Make and check final adjustments required for proper operation of the equipment.

D. Restore finishes marred during installation to remove abrasions, dents, and other damages. Polish stainless steel surfaces, and touch-up painted surfaces with original paint.

E. Clean up all refuse, rubbish, scrap materials, and debris caused by the work of this Section, and put the site in a neat, orderly, and broom-clean condition.

3.06 ITEMIZED EQUIPMENT

ITEM #1: UTILITY CART, MOBILE

QUANTITY:	Two (2)
MANUFACTURER:	Lakeside Manufacturing Company
MODEL NO.:	544 (N058)
PERTINENT DATA:	700-lb. Capacity, Three-Shelf, N.S.F. Model
UTILITIES REQ'D:	----
ALTERNATE MFRS.:	Piper Products

ITEM #1: (Continued)

Furnish and set-in-place per Equipment Plan, Sheet QF101; Manufacturer's Instructions and the following:

1. All four (4) casters swivel-type, in lieu of two (2) swivel, two (2) fixed.

ITEM #2: WALK-IN COOLER/FREEZER

QUANTITY:	One (1)
MANUFACTURER:	Thermo-Kool
MODEL NO.:	Indoor Installation (N058)
PERTINENT DATA:	4" Thick Durathane Construction - Class I; NSF Construction
UTILITIES REQ'D:	1750W, 120V, 1PH; (2) 3/4" IW
ALTERNATE MFRS.:	Bally; ThermalRite

Furnish and set-in-place per Equipment Plan, Sheet QF101; Building Conditions Plan, Sheet QF102; Manufacturer's Shop Drawing and the following:

1. Two Section Unit: 18'-3½" L x 7'-9" W x 9'-0" H. Interior width: Freezer - 9'-4" wide; Cooler - 7'-11½" wide.

2. Exterior Finish:
   - 26 GA stucco embossed galvanized steel where unexposed.
   - 20 GA stucco embossed stainless steel where exposed.

3. Interior Finish:
   - White acrylic enamel baked-on .040 stucco embossed aluminum walls.
   - White acrylic enamel baked on 26 GA smooth galvanized steel ceiling.

4. Interior Floor:
   - 4" prefabricated floor panels installed in 6" deep floor recess over hot asphalt paper or 10 MIL polyethylene sheets on building floor slab.
   - 2" setting bed with two (2) layers of wire reinforcing mesh fabric and quarry tile floor material with 6" high integral coved base, interior and exterior of box, installed over prefabricated floor panel by Tile Contractor.

5. Entrance Door:
   - Two (2) flush-mounted, self-closing right-hand hinged doors with 34" x 76" net opening.
   - Polished chrome camlift hinges with lift-off capability. One (1) extra hinge per door, three (3) total.
   - Kason #1236 polished chrome lever-action handle with knob-turn release and cylinder lock.
   - Kason #09440004 polished chrome mortise dead-bolt lock, factory mounted.
   - Hydraulic door closer.
   - Standard 2" diameter dial indicating thermometer factory mounted, each compartment.
   - Pilot light and switch assembly factory mounted in door frame with stainless steel coverplate.
   - 36" high aluminum diamond tread kickplates, interior and exterior of door, frame and jamb.
   - 14" x 24" heated observation windows, both compartments.
   - Undercut doors for quarry tile floor.
   - Cool Curtain Clear-Vu Model #SS3678 vinyl swinging curtains factory installed at each entrance door.
   - Kason #1806 LED light fixture with high-impact plastic cover centered over door opening to avoid conflict with shelving, each compartment. Extend wiring in conduit, foamed within door panel header, to junction box mounted on top of walk-in ceiling, each compartment.
   - Kason #907 interior door handle, factory mounted, with concealed metal backing plate.
   - Round vinyl door bumper mounted to front exterior face to protect handle from puncturing wall when door in full open position.
   - Engraved phenolic plastic compartment sign - 12" long x 2" high; white in color with 1" high blue CAPITAL letters mounted on each door above observation window; (1) - COOLER, (1) - FREEZER.
   - Stainless steel heated threshold, each compartment.

6. Heated pressure relief port in freezer, ceiling mounted.

ITEM #2: (Continued)

7. Two (2) Kason #1810L21248LB 48" long twin-tube LED light fixtures with shatter-proof high impact plastic covers centrally-mounted to walk-in ceiling per Detail, Sheet QF104; one (1) for the cooler, one (1) for the freezer. Provide low-temperature ballast (-20°F.) in freezer. Fixtures shipped loose and installed by K.E.C.; final connection by Electrical Contractor.

8. Modularm Model #75LC recessed flush-mount digital thermometer with audio-visual temperature alarm factory mounted in door frames for both cooler and freezer compartments inter-wired with building monitoring system by Electrical Contractor, as required. Extend temperature probe to rear wall of each compartment.

9. Provide and install trim strips of matching exterior finish between ends of walk-in panels and building walls from finish floor to 6" above finish ceiling; verify finished ceiling height.

10. Provide and install closure panels of matching exterior finish between top of walk-in and finish ceiling per Detail Sheet QF102; K.E.C. to verify finished ceiling height.

11. All electrical conduit shall be run concealed above walk-in ceiling, per Detail Sheet QF104.

12. Evaporator coil drain lines shall be run to floor drain with "P"-trap on exterior of box by K.E.C. Pitch drain lines 1" per foot of horizontal run.

13. Black flexible "Armaflex" insulation applied to exposed drain lines and fittings within interior of box by K.E.C.

14. Spiral heat tape applied to drain line within interior of freezer compartment prior to application of insulation by K.E.C. Drain line heating cable shall be installed for continuous 24-hour operation.

15. Coordinate location of sprinkler head drops and provide penetrations, where necessary.

16. Seal and insulate all openings to prevent infiltration of warm air into cooler/freezer compartments.

17. Quality Inspection Requirement:
    -- Walk-In shall be completely erected at the manufacturer’s facility prior to shipment and a quality control inspection performed on the assembled structure. A digital photograph of factory assembled walk-in shall be provided for the K.E.C. permanent records and included in the operation and maintenance manuals.

ITEM #3: COOLER REFRIGERATION SYSTEM

QUANTITY:	One (1)
MANUFACTURER:	ColdZone
MODEL NO.:	ORE-H080M44-2S (N058)
PERTINENT DATA:	Uni-Pak, Air-Cooled, Outdoor Installation, Remote
UTILITIES REQ'D:	4.6A, 208V, 1PH
ALTERNATE MFR.:	RDT; Omni-Temp

Furnish and set-in-place per Equipment Plan, Sheet QF101; Building Conditions Plan, Sheet QF102; Manufacturer's Shop Drawing and the following:

1. Condensing Unit: Factory Pre-Assembled, Hermetic, Medium Temperature, R-404A.

2. System located outdoors on roof. Curb with pitch-pocket furnished and installed by General Contractor.

3. Complete winterization package and condensing unit weatherproof cover.

4. Factory installed air defrost timer with contactors and relays.

5. Overall size: 28" L x 28" W x 17" H.

ITEM #3: (Continued)

6. Weight: 152 lbs.

7. Evaporator Coil with High-Efficiency EC Motors: Low-Profile, End-Mount Type, Model AA26-70B; 1.8A, 120V, 1PH
   -- System to operate at +35°F.
   -- Furnished complete with thermostat, solenoid and expansion valves factory mounted ready for final connection by Refrigeration Contractor.

8. Complete refrigeration system warrantee: five (5) years for the compressor, Two (2) years for the condensing unit, and Two (2) years for all parts of the evaporator coil.

9. Factory installed main-fused disconnect switch.

ITEM #4: FREEZER REFRIGERATION SYSTEM

QUANTITY:	One (1)
MANUFACTURER:	ColdZone
MODEL NO.:	ORE-H215L44-2T (N058)
PERTINENT DATA:	Uni-Pak Air-Cooled, Outdoor Installation, Remote
UTILITIES REQ'D:	13.1A, 208V, 3PH
ALTERNATE MFR.:	RDT; Omni-Temp

Furnish and set-in-place per Equipment Plan, Sheet QF101; Building Conditions Plan, Sheet QF102; Manufacturer's Shop Drawing and the following:

1. Condensing Unit: Factory Pre-Assembled, Hermetic, Medium Temperature, R-404A.

2. System located outdoors on roof. Curb with pitch-pocket furnished and installed by General Contractor

3. Complete winterization package and condensing unit weatherproof cover.

4. Factory installed air defrost timer with contactors and relays.

5. Overall size: 40" L x 28" W x 17" H.

6. Weight: 243 lbs.

7. Evaporator Coil with High-Efficiency EC Motors: Low-Profile, End-Mount Type, Model AE26-75B; 0.9A, 208V, 1PH (Fan); 7.0A, 208V, 1PH (Defrost Heater)
   -- System to operate at -10°F.
   -- Furnished complete with thermostat, solenoid and expansion valves factory mounted ready for final connection by Refrigeration Contractor.

8. Complete refrigeration system warrantee: five (5) years for the compressor, Two (2) years for the condensing unit, and Two (2) years for all parts of the evaporator coil.

9. Factory installed main-fused disconnect switch.

ITEM #5: SHELVING

QUANTITY: Eleven (11)
MANUFACTURER: InterMetro Industries Corporation
MODEL NO.: MetroMax i (N058)
PERTINENT DATA: Free-Standing, Open-Grid Shelf Mat, Polymer
UTILITIES REQ'D: ----
ALTERNATE MFRS.: None

Furnish and set-in-place per Equipment Plan, Sheet QF101; Manufacturer's Instructions and the following:

Cooler:

1. Two (2) #MX1836G sections; 18" W x 36" L x 4-tier high.

2. Two (2) #MX1842G sections; 18" W x 42" L x 4-tier high.

3. One (1) #MX1854G section; 18" W x 54" L x 4-tier high.

4. Twenty (20) #MX63P polymer posts, 63" high.

5. Plastic wedge lock connectors, quantity as required.

6. Locate bottom shelf @ 12" A.F.F.; space remaining shelves equally.

Freezer:

1. Two (2) #MX1836G sections; 18" W x 36" L x 4-tier high.

2. Three (3) #MX1842G sections; 18" W x 42" L x 4-tier high.

3. One (1) #MX1848G section; 18" W x 48" L x 4-tier high.

4. Twenty-four (24) #MX63P polymer posts, 63" high.

5. Plastic wedge lock connectors, quantity as required.

6. Locate bottom shelf @ 12" A.F.F.; space remaining shelves equally.

ITEM #6: SHELVING

QUANTITY: Eight (8)
MANUFACTURER: InterMetro Industries Corporation
MODEL NO.: Super Erecta (N058)
PERTINENT DATA: Stationary, Free-Standing, Chrome-Plated, Wire
UTILITIES REQ'D: ----
ALTERNATE MFRS.: None

Furnish and set-in-place per Equipment Plan, Sheet QF101; Manufacturer's Instructions and the following:

Dry Storage:

1. Eight (8) #2142NC sections; 21" W x 42" L x 5-tier high.

2. Thirty-two (32) #74P chrome-plated posts; 74-5/8" high.

3. Plastic split sleeves, quantity as required.

ITEM #6: (Continued)

4. Locate bottom shelf @ 12" A.F.F.; space remaining shelves equally.

ITEM #7: HAND SINK

QUANTITY: Three (3)
MANUFACTURER: Eagle Foodservice Equipment Company
MODEL NO.: HSA-10-FAW-LRS (N058)
PERTINENT DATA: Wall Mounted, Wrist Action Faucet
UTILITIES REQ'D: 1/2" HW, 1/2" CW, 1-1/2" W
ALTERNATE MFRS.: Advance/Tabco; Universal

Furnish and set-in-place per Equipment Plan, Sheet QF101; Manufacturer's Instructions and the following:

1. Complete sink assembly consisting of: gooseneck faucet, p-trap, tailpiece and basket drain.

2. Accessories (each unit):
   -- #606215 skirt assembly.
   -- Integral right and left stainless steel splash shield.

ITEM #8: SOAP & TOWEL DISPENSER

QUANTITY: Three (3)
MANUFACTURER: Bobrick Washroom Equipment, Inc.
MODEL NO.: B-5050/B-262 (N058)
PERTINENT DATA: Surface Wall Mounted, Stainless Steel Finish (400) C-Fold Capacity
UTILITIES REQ'D: ----
ALTERNATE MFRS.: None

Furnish and set-in-place per Equipment Plan, Sheet QF101; Manufacturer's Instructions and the following:

1. Mount units above hand sink and seal perimeter to wall.

ITEM #9: PREP SINK

QUANTITY: One (1)
MANUFACTURER: Custom Fabricated
MODEL NO: #14 GA Stainless Steel
PERTINENT DATA: 8'-0" Long x 2'-6" Wide x 2'-10" High
UTILITIES REQ'D: 1/2" HW, 1/2" CW, (2) 1-1/2" IW
ALTERNATE MFRS.: None

Fabricate and set-in-place per Equipment Plan, Sheet QF101; Fabrication Detail, Sheet QF501; and the following:

1. Front and end edge rolls per Detail 1.02B.

2. 13" high backsplash per Detail 1.04A with finished back.

3. Framework per Detail 1.05.

4. Legs per Detail 1.07. Flanged feet on each corner leg.

5. Stainless steel undershelf on both ends per Detail 1.11.

ITEM #9: (Continued)

6. Sound-deaden underside of sinks and drainboards with NSF-approved sound dampening material.

7. Accessories:
   -- One (1) T&S #B-0231 backsplash-mounted swing spout faucet with #B-0199-1 aerator.
   -- Two (2) T&S #B-3950-01 twist waste valves with overflow assemblies and #010387-45 basket strainers.
   -- Two (2) duplex receptacles with stainless steel faceplates mounted in finished backsplash. Final connection by Electrical Contractor.

8. Item will remain shrink-wrapped until ready for final connection by Plumbing Contractor. Immediately following completion of final connections, K.E.C. shall re-shrink-wrap tubs or provide removable panel to avoid use by construction trades. Post sign on wall above sink tubs in English and Spanish stating: WARNING! NOT TO BE USED BY CONSTRUCTION TRADES. FAILURE TO COMPLY WILL RESULT IN $500.00 FINE AND ALL COSTS TO REPLACE ITEM WITH NEW.

ITEM #10: REACH-IN REFRIGERATOR, MOBILE

QUANTITY:	One (1)
MANUFACTURER:	Continental Refrigerator
MODEL NO.:	DL2R-SS-HD (N058)
PERTINENT DATA:	Designer Line Series, Two-Section, Self-Contained, Stainless Steel Interior/Exterior
UTILITIES REQ'D:	9.1A, 120V, 1PH
ALTERNATE MFR.:	True Food Service Equipment

Furnish and set-in-place per Equipment Plan, Sheet QF101; Manufacturer's Instructions and the following:

1. Half-height doors hinged per Equipment Plan.

2. Cylinder door locks, keyed-alike.

3. Interior fitted with standard wire shelves, three (3) per compartment, twelve (12) total.

4. Exterior mounted digital thermometer.

5. 5" diameter heavy-duty swivel casters, front two (2) with brakes.

6. Cord and plug set.

ITEM #11: UNDERCOUNTER BLAST CHILLER

QUANTITY:	One (1)
MANUFACTURER:	Piper Products
MODEL NO.:	RCR051S (N058)
PERTINENT DATA:	One-Section, Self-Contained, Stainless Steel Interior/Exterior
UTILITIES REQ'D:	5.4A, 208V, 1PH
ALTERNATE MFRS.:	Delfield

Furnish and set-in-place per Equipment Plan, Sheet QF101; Manufacturer's Instructions and the following:

1. 2½" high stainless steel legs with adjustable bullet feet.

2. Cord and plug set with matching receptacle furnished and installed by Electrical Contractor.

ITEM #12: SLICER

QUANTITY: One (1)
MANUFACTURER: Hobart Corporation
MODEL NO.: 2712-1 (N058)
PERTINENT DATA: Automatic 2-Speed Carriage Drive, 12" Diameter Blade, With Low Fence
UTILITIES REQ'D: 1/2 HP, 120V, 1PH
ALTERNATE MFRS.: Berkel; Globe

Furnish and set-in-place per Equipment Plan, Sheet QF101; Manufacturer's Instructions and the following:

1. Accessories:
   -- One (1) #161712-FENHGH adjustable high fence.
   -- One (1) #FOOD-CHUTE tubular chute with plunger.
   -- Operator training video tape.

2. Cord and plug set.

ITEM #13: FOOD PROCESSOR

QUANTITY: One (1)
MANUFACTURER: Robot Coupe USA, Inc.
MODEL NO.: R-602V (N058)
PERTINENT DATA: Continuous Feed Hopper, Dual Purpose, Variable Speed, 7-Qt. Bowl
UTILITIES REQ'D: 15.0A, 120V, 1PH
ALTERNATE MFRS.: None

Furnish and set-in-place per Equipment Plan, Sheet QF101; Manufacturer's Instructions and the following:

1. Standard food processor package consisting of: food processor, 7-qt. stainless steel bowl, continuous feed vegetable preparation attachment, (1) #28058 1/8" grating disc and (1) #28064 1/8" slicing disc.

2. Accessories:
   -- One (1) #R255 disc rack.

3. Cord and plug set.

ITEM #14: WORKTABLE

QUANTITY: One (1)
MANUFACTURER: Custom Fabricated
MODEL NO.: #14 GA Stainless Steel
PERTINENT DATA: 8'-0" Long x 2'-6" Wide x 3'-0" High
UTILITIES REQ'D: ----
ALTERNATE MFRS.: None

Fabricate and set-in-place per Equipment Plan, Sheet QF101; Fabrication Detail, Sheet QF501; and the following:

1. Perimeter edge rolls per Detail 1.02M.

2. Framework per Detail 1.05.

3. Legs per Detail 1.07.

4. Stainless steel undershelf per Detail 1.11.

ITEM #14: (Continued)

5. One (1) stainless steel drawer assembly per Detail 1.14, Type I with locks.

6. Worktable per Detail 2.01.

7. Sound-deaden underside of tabletop with NSF-approved sound dampening material.

ITEM #15: POT WASHING SINK

QUANTITY:	One (1)
MANUFACTURER:	Custom Fabricated
MODEL NO.:	#14 GA Stainless Steel
PERTINENT DATA:	12'-0" Long x 2'-6" Wide x 3'-0" High
UTILITIES REQ'D:	(2) 3/4" HW, (2) 3/4" CW, (3) 2" IW
ALTERNATE MFR.:	None

Fabricate and set-in-place per Equipment Plan, Sheet QF101; Fabrication Detail, Sheet QF501; and the following:

1. Front and end edge roll per Detail 1.02B.

2. 13" high backsplash per Detail 1.04A with finished back.

3. Framework per Detail 1.05

4. Legs per Detail 1.07. Flanged feet on each corner leg.

5. Crossbracing per Detail 1.10.

6. Stainless steel undershelf on both ends per Detail 1.11.

7. Pot sink and drainboards per Detail 3.01.

8. Sound-deaden underside of sinks and drainboards with NSF-approved sound dampening material.

9. Accessories:
   - -- Two (2) T&S #B-290 backsplash mounted swing spout faucets.
   - -- Three (3) T&S #B-3950-01 twist waste valves with overflow assemblies and #010387-45 basket strainers.
   - -- Two (2) duplex receptacles with stainless steel faceplates mounted in finished backsplash. Final connection by Electrical Contractor.

10. Item will remain shrink-wrapped until ready for final connection by Plumbing Contractor. Immediately following completion of final connections, K.E.C. shall re-shrink-wrap tubs or provide removable panel to avoid use by construction trades. Post sign on wall above sink tubs in English and Spanish stating: WARNING! NOT TO BE USED BY CONSTRUCTION TRADES. FAILURE TO COMPLY WILL RESULT IN $500.00 FINE AND ALL COSTS TO REPLACE ITEM WITH NEW.

ITEM #16: POT & PAN SHELVING, MOBILE

QUANTITY:	One (1)
MANUFACTURER:	InterMetro Industries Corporation
MODEL NO.:	MetroMax i (N058)
PERTINENT DATA:	Four-Tier High, Polymer, Open Grid Mat Shelf
UTILITIES REQ'D:	----
ALTERNATE MFR.:	None

ITEM #16: (Continued)

Furnish and set-in-place per Equipment Plan, Sheet QF101, Manufacturer's Instructions and the following:

1. One (1) #MX2448G section; 24" W x 48" L x 4-tier high.

2. Four (4) #MX63UP polymer posts for stem casters, 63" high.

3. Two (2) #5MPX polyurethane swivel casters with donut bumpers.

4. Two (2) #5MPBX polyurethane swivel casters with brakes and donut bumpers.

5. Plastic wedge lock connectors, quantity as required.

6. Locate bottom shelf @ 12" A.F.F., space remaining shelves equally.

7. Accessories:
   -- Two (2) #MTR2448XE tray drying racks.
   -- Ten (10) #MXD24-8 shelf dividers.

ITEM #17: WASHER/DRYER, STACKED – (N.I.K.E.C. - SPECIFIED BY ARCHITECT)

QUANTITY: One (1)

ITEM #18: ICE MACHINE/BIN

QUANTITY: One (1)
MANUFACTURER: Manitowoc Equipment Works
MODEL NO.: ID-0322A/B-420 (N058)
PERTINENT DATA: Air-Cooled, 350-LB. Maker, 310-LB. Bin, Dice Size Cubes
UTILITIES REQ'D: 11.5A, 120V, 1PH; 1/2" CW, 1/2" IW (Maker Drain), 3/4" IW (Bin Drain)
ALTERNATE MFRS.: Scotsman; Ice-O-Matic

Furnish and set-in-place per Equipment Plan, Sheet QF101; Manufacturer's Instructions and the following:

1. Stainless steel exterior finish, ice machine and bin.

2. Accessories:
   -- One (1) Everpure Model EV9324-21 InsurIce 2000 single water filter system with 20" Coarse Filter factory assembled to common wall mounting rack.
   -- 6" high stainless steel leg set with adjustable bullet feet.
   -- Custom fabricated stainless steel ice scoop holder bracket mounted to right-side of bin per Detail, Sheet QF501.

ITEM #19: WORKTABLE WITH SINK

QUANTITY: One (1)
MANUFACTURER: Custom Fabricated
MODEL NO.: #14 GA Stainless Steel
PERTINENT DATA: 12'-0" Long x 2'-6" Wide x 3'-0" High
UTILITIES REQ'D: ½" HW, ½" CW, 1-½" IW
ALTERNATE MFR.: None

ITEM #19: (Continued)

Fabricate and set-in-place per Equipment Plan, Sheet QF101; Fabrication Detail, Sheet QF501 and the following:

1. Perimeter edge roll per Detail 1.02M.

2. Framework per Detail 1.05.

4. Legs per Detail 1.07.

5. Crossbracing per Detail 1.10.

6. Stainless steel undershelf per Detail 1.11.

6. Two (2) stainless steel drawer assemblies per Detail 1.14, Type I, with locks.

7. Worktable per Detail 2.01.

8. 18" x 18" x 10" deep utility sink per Detail 3.04 with waste lever angle bracket welded to underside of sink.

9. Sound-deaden underside of tabletop and sink with NSF-approved sound dampening material.

10. Accessories:
    -- One (1) T&S #B-325 deck-mounted swivel gooseneck faucet with #B-199-1 aerator.
    -- One (1) T&S #B-3950-01 twist waste valve with overflow assembly and #010387-45 basket strainer.

ITEM #20: CONVECTION OVEN

QUANTITY:	One (1)
MANUFACTURER:	Blodgett Oven Company, Inc.
MODEL NO.:	HV-100G-DOUBLE (N058)
PERTINENT DATA:	Double Section, Standard Depth, HydroVection™
UTILITIES REQ'D:	(2)20.0, 120V, 1PH; (2)3/4" CW, (2)1" IW; ¾" Natural Gas @ 120 MBH
ALTERNATE MFRS:	None

Furnish and set-in-place per Equipment Plan, Sheet QF101; Manufacturer's Instructions and the following:

1. Natural gas fired, pressure regulator as required. Manifold rear gas connection of each oven compartment for single connection point ready for quick disconnect assembly furnished with Item #22.

2. Standard compliment of wire racks, five (5) per section.

3. Accessories:
    -- 11" adjustable legs.
    -- MenuSelect control with core probe.
    -- Stacking kit.
    -- Ten (10) multi-purpose fry pans.
    -- Five (5) additional stainless steel wire racks.
    -- One (1) Everpure #EV9797-21 KleenSteam II Single System Water Filter. Ship to Utility Raceway manufacturer for factory installation.

4. Approved backflow preventor furnished and installed by Plumbing Contractor.

5. Mechanical and electrical service supplied through Utility Raceway, Item #22.

ITEM #21: EXHAUST CANOPY

QUANTITY:	One (1)
MANUFACTURER:	Captive-Aire Systems, Inc.
MODEL NO.:	6030VHB-ND (N058)
PERTINENT DATA:	Stainless Steel, Non-Grease, Heat/Vapor Removal Only Type
UTILITIES REQ'D:	1,800 CFM Exhaust; 350W, 120V, 1PH (Lights)
ALTERNATE MFR.:	Avtec; Gaylord

Furnish and install per Equipment Plan, Sheet QF101; Exhaust Canopy Details, Sheet QF503; Manufacturer's Instructions and the following:

1. 5'-0" Wide x 12'-0" Long x 2'-6" High with bottom edge mounted at 6'-8" A.F.F. Length comprised of one (1) 12'-0" section. Entire unit constructed of 18 GA stainless steel type 304 with #4 finish on all exposed surfaces with liquid tight all welded external continuous seams and joints per N.F.P.A. 96,U.L. and State of Delaware Codes.

2. Three (3) U.L. Listed, NSF-Approved, 36" long twin-tube recessed LED light fixtures, equally spaced. Bulbs furnished and installed by K.E.C.

3. Matching stainless steel perimeter closure panels to finished ceiling; K.E.C. to verify ceiling height.

4. On/Off fan and light switches factory mounted in Item #22: Utility Raceway.

5. Hanger rods and support system from structure above by Contractor. K.E.C. to coordinate method and location with other trades.

6. Integral stainless steel hanger brackets.

7. 8" wide stainless steel angle framing and closure panels @ rear to accommodate Utility Raceway, Item #22.

8. Exhaust hood shall be of same manufacturer as Utility Raceway, Item #22.

ITEM #22: UTILITY RACEWAY

QUANTITY:	One (1)
MANUFACTURER:	Captive-Aire Systems, Inc.
MODEL NO.:	UDW (N058)
PERTINENT DATA:	Wall-Mounted
UTILITIES REQ'D:	14.4KW, 120/208V, 3PH; 3/4"CW; 1-1/4" Natural Gas @ 960MBH (Looped Service)
ALTERNATE MFRS.:	Avtec; Gaylord

Furnish and install per Equipment Plan, Sheet QF101; Utility Raceway Details, Sheet QF502; Manufacturer's Instructions and the following:

1. All components and labor necessary for a complete system manufactured in accordance with NEC latest edition, NEMA, NFPA No. 96 and No. 54, Uniform Plumbing Code, ASME, OSHA using only U.L. Listed certified components.

2. 12'-0" long x 8" wide x 6'-10" high with risers, completely pre-wired and pre-plumbed to one final connection point for electric, cold water and gas. All connections shall face down on horizontal member.

3. System shall extend up to bottom edge of Exhaust Canopy, Item #21.

4. 54" overall height less risers with peaked top.

5. 36" wide x 6'-10" high risers on each end with 2" penetration into ventilator at 6'-8" A.F.F.

ITEM #22: (Continued)

6. Entire raceway shall be constructed of #16 gauge Type 304 stainless steel with a #4 mill finish.

7. Removable link plates constructed of #16 gauge stainless steel.

8. Electrical compartment shall be completely enclosed with stainless steel housing accessible by the removal of link plates. Internal electrical feeder shall be cable wireway having balanced load and phases and with connection lugs for main service. Branch circuit wiring for each electrical connection shall be phase identified and sized in accordance with circuit breaker rated capacity. Raceway shall provide electrical, gas and water service for items #20, #23 and #24.

9. Provide 12" long interchangeable 16 gauge stainless steel link connection plate for each electrical connection equipped with individual circuit breaker(s) installed in breaker panel mounted in right-hand riser, and grounding type receptacle with twist-lock feature or pre-wired flexible sealtite conduit.

10. On each connection plate provide U.L. listed GFIC ground fault interrupter circuits and matching power supply cords on each 120-volt single-phase connection.

11. Cold water plumbing compartment shall be isolated from electrical compartment. All piping and disconnects in system shall be color coded.

12. At each individual gas branch connection, provide 1/4-turn ball valve and 48" long Dormont PVC coated AGA and NSF approved flexible hose with SnapFast quick-disconnect device and double SwivelMAX gas connectors.

13. Provide fire/fuel shut-off for electric equipment per NFPA No. 96. System shall require one final connection by Contractor from fire protection system.

14. All cold water piping, including individual branch pipe connection, shall be hard temper type "L" copper tubing with copper sweat type solder fittings. At each individual connection, provide A.G.A approved flexible hose(s) with two wall brass and stainless steel construction with quick-disconnect fittings.

15. Provide matching cord sets for all electric equipment, five (5) total.

16. Neoprene bumper strips, full length.

17. U.L. listed, solid-state control panel mounted in right-hand riser end, with the following integral accessories:
    - -- Ventilator start/stop station with adjustable time-delay to exhaust residual heat.
    - -- Ventilator light switch, pre-wired in 10ft. flexible conduit ready for connection to light junction box in ventilator by Electrical Contractor.

18. Accessories:
    - -- One (1) Everpure #EV9797-21 KleenSteam II water filter system factory-installed and housed within left-hand riser. Provide one (1) independent pre-piped water line to service point for Item #20: Convection Oven. Fabricate 18"x18" lexan viewport in riser panel to monitor pressure gauge and filter bowl.

19. Fabricated in three (3) sections, assembled in field to present integral one-piece appearance.

20. Main electrical shunt-type circuit breakers mounted in left-hand riser for 50A, 120/208V, 3PH service.

21. Factory supervision of installation and start-up.

22. Raceway shall be of same manufacturer as Exhaust Canopy, Item #21.

ITEM #23: CONVECTION STEAMER

QUANTITY: One (1)
MANUFACTURER: AccuTemp Products, Inc.
MODEL NO.: N61201E060 DBL (N058)
PERTINENT DATA: (2) Double Stacked, Stand-Mounted 6-Pan, Connected Boilerless, Evolution Series
UTILITIES REQ'D: (2)1.0A, 120V, 1PH; (2) 3/4" CW, (2) 3/4" IW; (2)1/2" Natural Gas @ 60 MBH
ALTERNATE MFRS.: None

Furnish and set-in-place per Equipment Plan, Sheet QF101; Manufacturer's Instructions and the following:

1. Accessories:
   -- #SNH-20-00 heavy-duty stainless steel support stand with adjustable bullet feet.

2. Electrical and mechanical services provided thru Utility Raceway, Item #22.

ITEM #24: CONVECTION OVEN, MOBILE

QUANTITY: One (1)
MANUFACTURER: Blodgett Oven Company, Inc.
MODEL NO.: DFG-100-SINGLE (N058)
PERTINENT DATA: Single-Deck, Standard Depth
UTILITIES REQ'D: 1/3 HP, 120V, 1PV; 3/4" Natural Gas @ 55 MBH
ALTERNATE MFRS: None

Furnish and set-in-place per Equipment Plan, Sheet QF101; Manufacturer's Instructions and the following:

1. Natural gas fired, pressure regulator as required.

2. Standard compliment of wire racks, five (5) per section.

3. Doors with dual pane thermal windows and interior light package.

4. Accessories:
   -- Stainless steel front, both sides, top and solid back panels.
   -- Four (4) heavy-duty 5" diameter polyurethane swivel casters, front two (2) with brakes.
   -- Blower fan guard.

5. Cord and plug sets.

6. Electrical and mechanical services supplied through Utility Raceway, Item #22.

ITEM #25: PAN RACK CART, MOBILE

QUANTITY: Two (2)
MANUFACTURER: CresCor
MODEL NO.: 207-UA-13A (N058)
PERTINENT DATA: Universal Angles, Channel Posts, (18) 22x20 Pan Capacity
UTILITIES REQ'D: ----
ALTERNATE MFR: InterMetro; Lakeside

Furnish and set-in-place per Equipment Plan, Sheet QF101; Manufacturer's Instructions and the following:

1. Accessories:
   -- Full perimeter non-marking wrap-around vinyl bumper.

ITEM #26: PASS-THRU REFRIGERATOR, MOBILE

QUANTITY: Two (2)
MANUFACTURER: Continental Refrigerator
MODEL NO.: DL1R-SS-PT-HD (N058)
PERTINENT DATA: Designer Line Series, Two-Section, Self-Contained, Stainless Steel Exterior/Interior
UTILITIES REQ'D: 7.2A, 120V, 1PH
ALTERNATE MFRS.: True

Furnish and set-in-place per Equipment Plan, Sheet QF101; Manufacturer's Instructions and the following:

1. Half-height doors hinged per Equipment Plan. Glass doors on kitchen side, solid doors on serving side.

2. Cylinder door locks, keyed-alike.

3. #16 gauge stainless steel, angle type, bottom support tray slides for 18"x26" pans in lieu of wire shelves installed on 3" centers, nine (9) pair per compartment, eighteen (18) total, each unit.

4. Exterior mounted digital thermometer installed on kitchen side.

5. Plastic laminate finish factory applied to door fronts on serving side only; color as selected by Architect, K.E.C. to verify.

6. Set of four (4), 5" diameter heavy-duty swivel-type locking casters with brakes.

7. Cord and plug set.

ITEM #27: PASS-THRU HEATED CABINET, MOBILE

QUANTITY: Two (2)
MANUFACTURER: Piper Products
MODEL NO.: 1016-SS-D (N058)
PERTINENT DATA: Double Unit, Insulated, Stainless Steel Exterior/Interior
UTILITIES REQ'D: 33.3A, 120V, 1PH
ALTERNATE MFRS.: CresCor; InterMetro

Furnish and set-in-place per Equipment Plan, Sheet QF101; Manufacturer's Instructions and the following:

1. Half-height doors hinged per Equipment Plan. Glass doors on kitchen side, solid doors on serving side.

2. Cylinder door locks, keyed-alike.

3. Accessories:
   -- Full-perimeter wrap-around non-marking vinyl bumper.

4. Cord and plug set.

ITEM #28: MILK COOLER, MOBILE

QUANTITY: Two (2)
MANUFACTURER: Continental Refrigerator
MODEL NO.: MC3-SS-S (N058)
PERTINENT DATA: 34" Wide, Single Access, Forced-Air, 8 Cu. Ft. Capacity
UTILITIES REQ'D: 1/4HP, 120V, 1PH
ALTERNATE MFR.: True

ITEM #28: (Continued)

Furnish and set-in-place per Equipment Plan, Sheet QF101; Manufacturer's Instructions and the following:

1. Stainless steel exterior and interior.

2. Cord and plug set.

3. Cylinder lid lock.

4. Swivel casters with brakes.

5. Accessories:
   -- #5-223 corner bumpers.

ITEM #29: SERVING COUNTER

QUANTITY:	One (1)
MANUFACTURER:	Elite 500 by Piper Products
MODEL NO.:	Modular Interlocking Sections
PERTINENT DATA:	T-Shaped Configuration, #14 Gauge S/S Tops
UTILITIES REQ'D:	----
ALTERNATE MFRS.:	Director’s Choice by Eagle Group; Shelleysteel by The Delfield Co.

Refer to individual counter components listed under alpha headings for specification.

ITEM #29A: HOT FOOD COUNTER

QUANTITY:	Two (2)
MANUFACTURER:	Elite 500 by Piper Products
MODEL NO.:	5-HF-MOD (N058)
PERTINENT DATA:	Electrically Heated, Open Base, Five (5) Wells
UTILITIES REQ'D:	24.0A, 208V, 1PH
ALTERNATE MFRS.:	Director’s Choice by Eagle Group; Shelleysteel by The Delfield Co.

Furnish and set-in-place per Equipment Plan, Sheet QF101; Manufacturer's Shop Drawing and the following:

1. (SRTS-74) - 10" wide full-length solid stainless steel tray slide with mitered end mounted on rigid brackets @ 29" A.F.F..

2. (SCB-74) - 8" wide full-length fold-down stainless steel work shelf on server's side.

3. (CPGL-74) – Cafeteria-style food protector with tempered glass front, ends and lights.

4. Line-up interlocks for counter body and tray slide.

5. Cord and plug set.

6. (SSL) - 6" high stainless steel legs with adjustable bullet feet.

7. (SD-74) – Sliding doors with lock on server’s side.

8. Standard counter height of 36" A.F.F. turn end down to align and interlock with adjacent cold food counter.

9. Laminate front and ends, color as selected by Architect; K.E.C. to verify.

ITEM #29B: COLD FOOD COUNTER

QUANTITY:	Two (2)
MANUFACTURER:	Elite 500 by Piper Products
MODEL NO.:	4CM-MOD (N058)
PERTINENT DATA:	Mechanically-Refrigerated Cold Pan, Open Base, NSF 7
UTILITIES REQ'D:	6.3A, 120V, 1PH; 3/4" IW
ALTERNATE MFRS.:	Director's Choice by Eagle Group; Shelleysteel by The Delfield Co.

Furnish and set-in-place per Equipment Plan, Sheet QF101; Manufacturer's Shop Drawing and the following:

1. (SRTS-74) - 10" wide full-length solid stainless steel tray slide with mitered end mounted on rigid brackets @ 29" A.F.F..

2. (CDDL) – Cafeteria style two-tier display with tempered glass front, ends and lights.

3. Line-up interlocks for counter body and tray slide.

4. Cord and plug set.

5. (SSL) – 6" high stainless steel legs with adjustable bullet feet.

6. (FB) - False bottom.

7. Modified counter height of 30" A.F.F.

8. Modify length of cold pan and display case to allow adequate passage for 10"x14" compartmented tray between cold pan and adjacent hot food counter.

9. Laminate front and ends, color as selected by Architect; K.E.C. to verify.

ITEM #29C: CORNER SOLID TOP COUNTER

QUANTITY:	Two (2)
MANUFACTURER:	Elite 500 by Piper Products
MODEL NO.:	R2-ST-MOD (N058)
PERTINENT DATA:	36" Wide, Open Base
UTILITIES REQ'D:	----
ALTERNATE MFRS.:	Director's Choice by Eagle Group; Shelleysteel by The Delfield Co.

Furnish and set-in-place per Equipment Plan, Sheet QF101; Manufacturer's Shop Drawing and the following:

1. Line-up interlocks for counter body.

2. (SSL) – 6" high stainless steel legs with adjustable bullet feet.

3. (SD-36) – Sliding doors with lock on server's side.

4. (DOUT) - 15-amp duplex convenience receptacle mounted in counter apron, server's side.

5. Cord and plug set.

6. Modified counter height of 30" A.F.F.

7. Laminate front and ends, color as selected by Architect; K.E.C. to verify.

ITEM #29D: CASHIER STAND

QUANTITY: Two (2)
MANUFACTURER: Elite 500 by Piper Products
MODEL NO.: 2-CD-MOD (N058)
PERTINENT DATA: 30" Long
UTILITIES REQ'D: 15A, 120V, 1PH (Dedicated Circuit)
ALTERNATE MFRS.: Director's Choice by Eagle Group; Shelleysteel by The Delfield Co.

Furnish and set-in-place per Equipment Plan, Sheet QF101; Manufacturer's Shop Drawing and the following:

1. (SRTS-30) - 10" wide full-length solid stainless steel tray slide with mitered end mounted on rigid brackets@ 29" A.F.F. Extend tray slide to span length of Item #29C: Solid Top Counter and interlock with cold food counter.

2. Line-up interlocks for countertop and tray slide.

3. (DOUT) - 15-amp convenience outlet mounted below top in counter body. Provide die-raised opening in top for power cord access.

4. Cashier's utility drawer with locking provision mounted on end.

5. (SSL) – 6" high stainless steel legs with adjustable bullet feet.

6. Cord and plug set.

7. Standard counter working height of 36" A.F.F. Turn top down to align & interlock with adjacent solid top counter.

8. Laminate front and ends, color as selected by Architect; K.E.C. to verify.

ITEM #30: WORKCOUNTER

QUANTITY: Two (2)
MANUFACTURER: Custom Fabricated
MODEL NO.: #14 GA Stainless Steel
PERTINENT DATA: 5'-0" Long x 2'-6" Wide x 3'-0" High
UTILITIES REQ'D: ----
ALTERNATE MFRS.: None

Fabricate and set-in-place per Equipment Plan, Sheet QF101; Fabrication Detail, Sheet QF501; and the following:

1. Front and end edge roll per Detail 1.02M.

2. 6" high backsplash per Detail 1.04A.

3. Counter framework per Detail 1.06.

4. Heavy-duty counter legs per Detail 1.08.

5. Workcounter per Detail 4.01.

6. Stainless steel hinged doors per Detail 4.26, with locks and laminate finish, color as selected by Architect; K.E.C. to verify.

7. Sound-deaden underside of tabletop with NSF-approved sound dampening material.

ITEM #31: CASH REGISTER -- (N.I.K.E.C. – FURNISHED BY OWNER)

QUANTITY: Two (2)

ITEM #32: CONDIMENT COUNTER, MOBILE

QUANTITY: One (1)
MANUFACTURER: Elite 500 by Piper Products
MODEL NO.: 2TSL-MOD (N058)
PERTINENT DATA: 50" Long, With Storage Base
UTILITIES REQ'D: ----
ALTERNATE MFRS.: Director's Choice by Eagle Group; Shelleysteel by The Delfield Co.

Furnish and set-in-place per Equipment Plan, Sheet QF101; Manufacturer's Shop Drawing and the following:

1. (SRTS-50) - 10" wide full-length solid tray slides mounted on fold-down brackets, on both sides.

2. Enclosed understorage base with bottom and intermediate stainless steel shelf and stainless steel sliding doors with lock.

3. 5" diameter heavy-duty swivel casters, all four (4) with brakes.

4. Modified counter height of 30" A.F.F.

5. Laminate front, back and ends, color as selected by Architect; K.E.C. to verify.

ITEM #33: MOP SINK & RACK -- (N.I.K.E.C. – SPECIFIED UNDER MECHANICAL DIVISION)

QUANTITY: One (1)

ITEM #34: SHELVING -- (N.I.K.E.C. – SPECIFIED BY ARCHITECT)

QUANTITY: One (1)

(END OF FOODSERVICE ITEMIZED SPECIFICATIONS)

STANDARD DETAILS

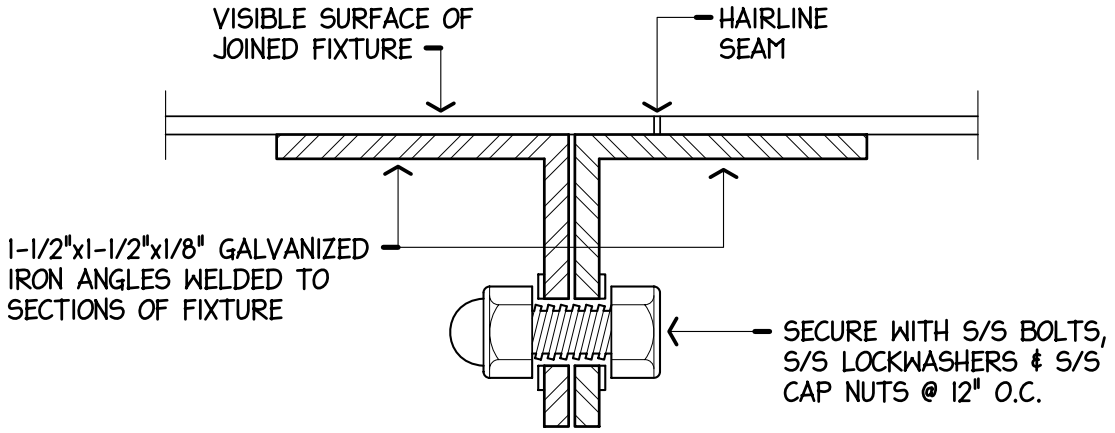

NOTE! JOINED SECTIONS SHALL BE DRAWN TOGETHER LEAVING ONLY A HAIRLINE SEAM.

A. BOLT DRAWN JOINT

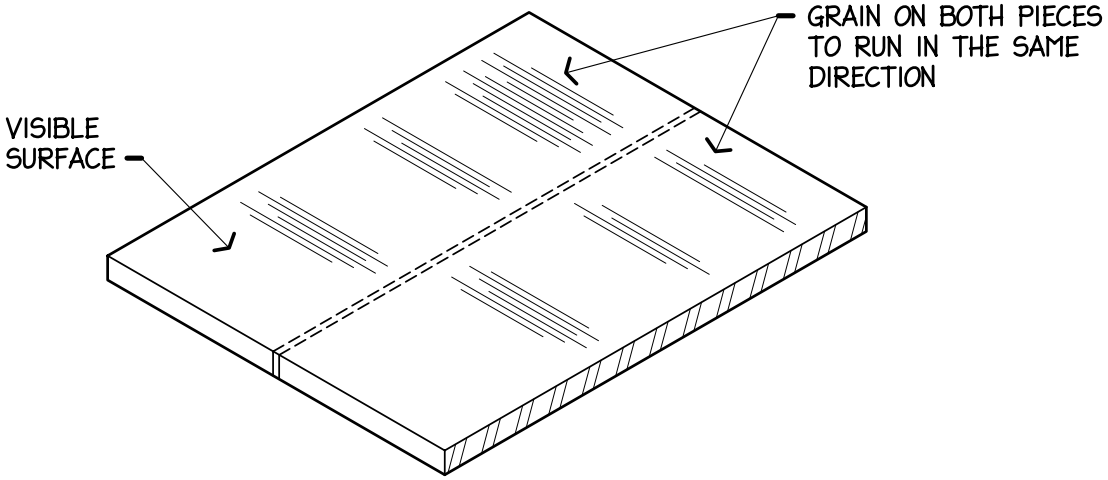

NOTE! ON FIXTURES SPECIFIED WITH WELDED FIELD JOINTS, WELDS SHALL BE CONTINUOUS, GROUND & POLISHED LEAVING NO VISIBLE EVIDENCE OF WELD.

B. WELDED BUTT JOINT

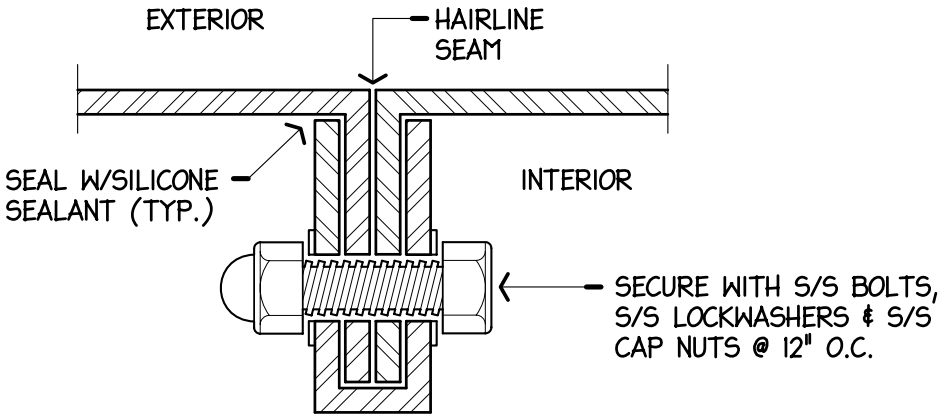

NOTE! JOINED SECTIONS SHALL BE DRAWN TOGETHER LEAVING ONLY A HAIRLINE SEAM.

C. RAISED CAP SEAM - KNUCKLE JOINT

NYIKOS ASSOCIATES, INC. Food Facilities Design/Consulting	DESCRIPTION: FIELD JOINTS & ASSEMBLY	STANDARD DTL: 1.01 PAGE: 114000-40

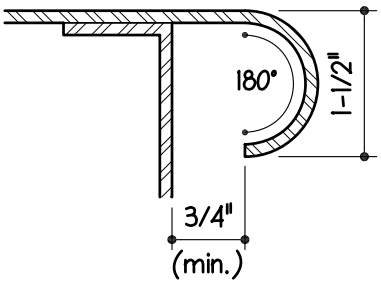

ROLLED A.

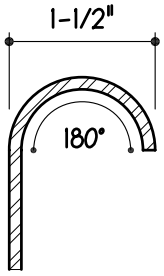

RAISED ROLLED B.

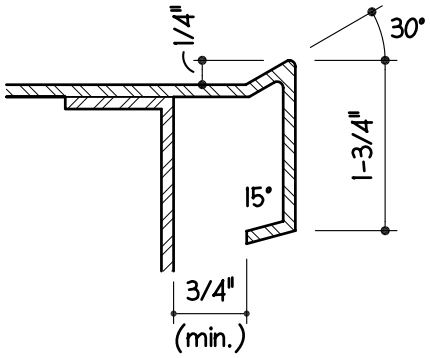

INVERTED "V" EDGE C.

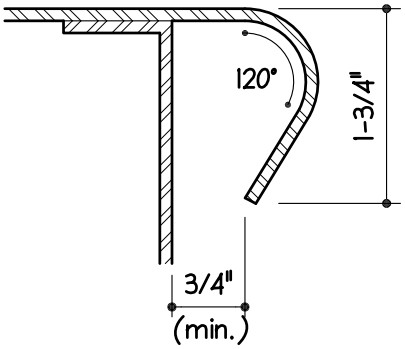

BULL NOSE ROLLED D.

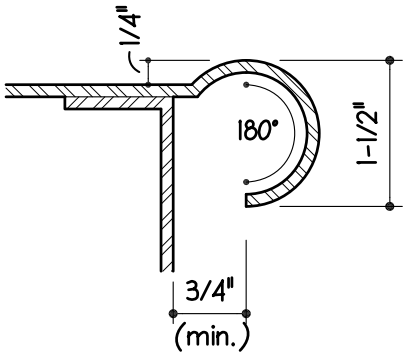

MARINE EDGE E.

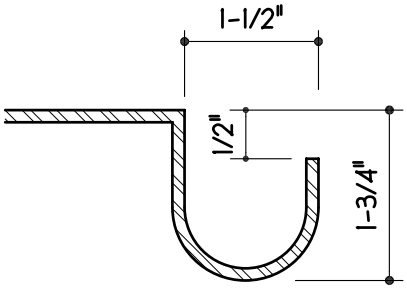

FLOUR GUTTER F.

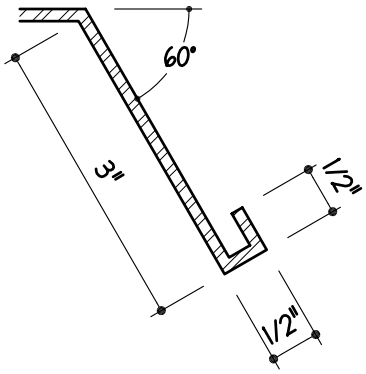

RECIPE CARD HOLDER G.

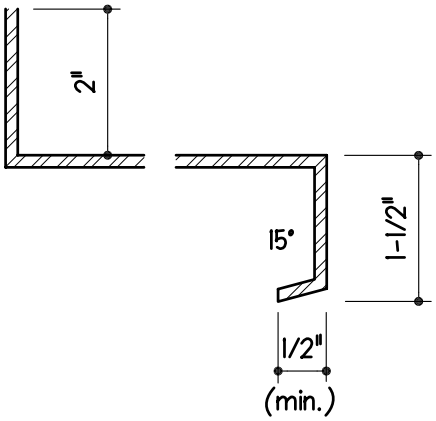

UNDERSHELF EDGE H.

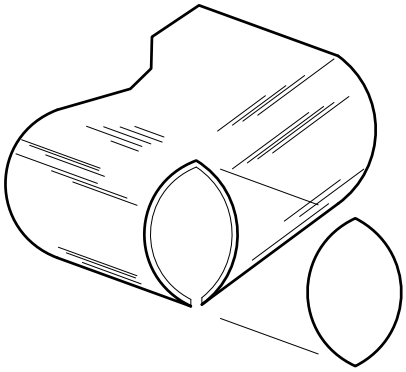

BULL NOSE CORNER I.

NYIKOS ASSOCIATES, INC. Food Facilities Design/Consulting	DESCRIPTION: EDGES	STANDARD DTL: 1.02 PAGE: 114000-41

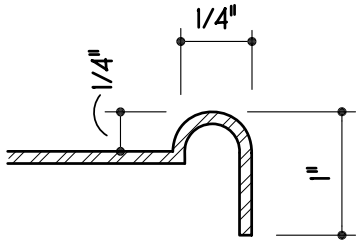

RAISED OPENING EDGE J.

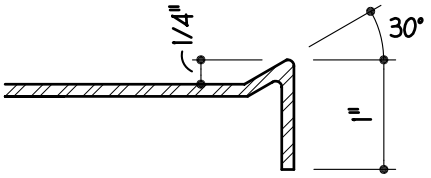

RAISED OPENING EDGE K.

a. AS SPECIFIED. TO MATCH ADJACENT ROLLED EDGES

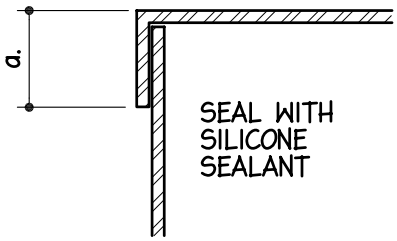

STRAIGHT TURN DOWN L.

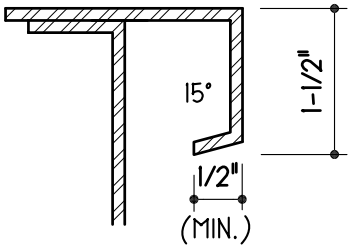

TURNED DOWN EDGE M.

NYIKOS ASSOCIATES, INC.
Food Facilities Design/Consulting

DESCRIPTION:

EDGES

STANDARD DTL: 1.02.1

PAGE: 114000-42

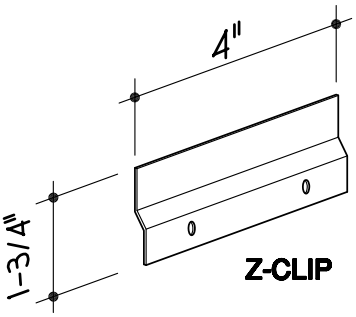

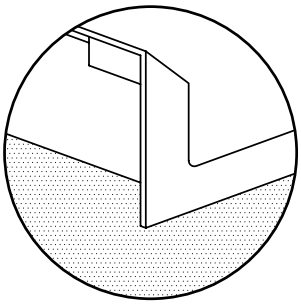

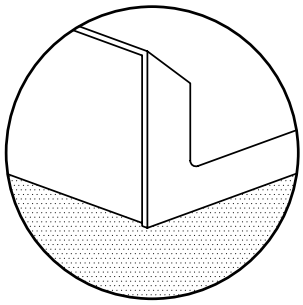

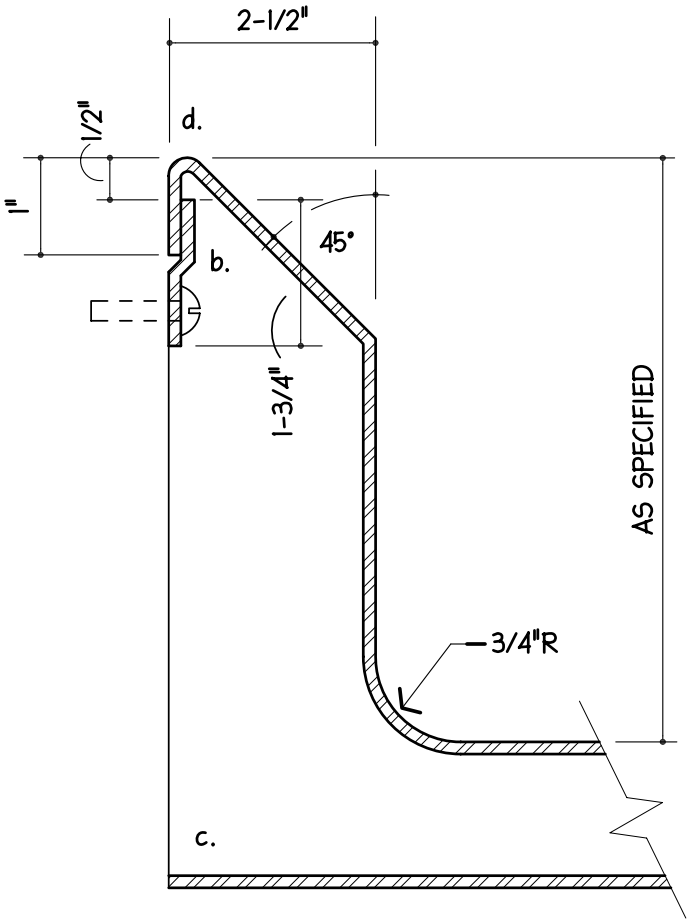

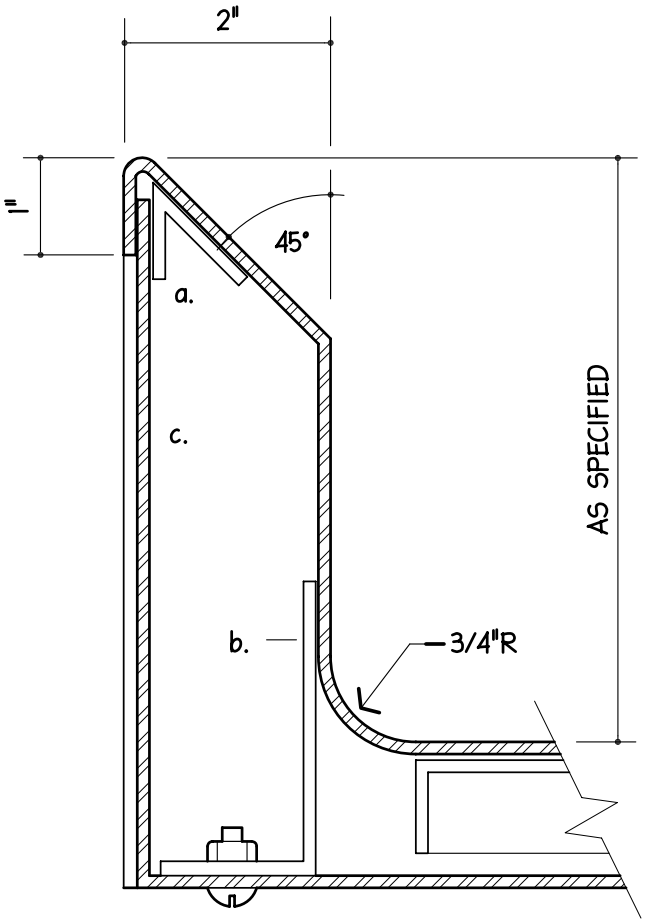

WALL UNIT

DETAIL A

a. 2-1/2" AT SINK TO ALLOW FOR CONNECTED OVERFLOW

b. 12 GA. S/S CLIPS, 4" LONG, FASTENED TO EACH WALL END OF EACH UNIT ¢ 4'-0" ON CENTER. SECURE TO WALL W/A MINIMUM OF TWO 1/4"x20 S/S TOGGLE BOLTS OR EXPANSION SHIELDS.

c. EXPOSED ENDS TO BE FULLY WELDED CLOSED.

d. SEAL ALL AROUND TO WALL WITH SILICONE SEALANT.

FREE STANDING UNIT

DETAIL B

a. 1"x1"x14 GA. S/S x1-1/2"LONG RETAINING CLIP WELDED IN PLACE. ONE AT EACH END OF UNIT AND 12" ON CENTER.

b. 2-1/2"x1-1/2x1-1/2" 14 GA.S/S CLIP WELDED TO SPLASH. ONE AT OF EACH UNIT ¢ 12" ON CENTER.

c. 14 GA S/S PANEL SECURED TO CLIPS W/ S/S OVALHEAD BOLT. WELD NUT TO CLIP.

d. EXPOSED ENDS TO BE FULLY WELDED.

NYIKOS ASSOCIATES, INC. Food Facilities Design/Consulting	DESCRIPTION: BACKSPLASHES	STANDARD DTL: 1.04 PAGE: 114000-43

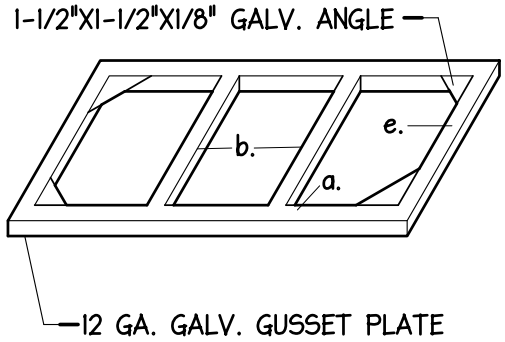

TABLES

A.

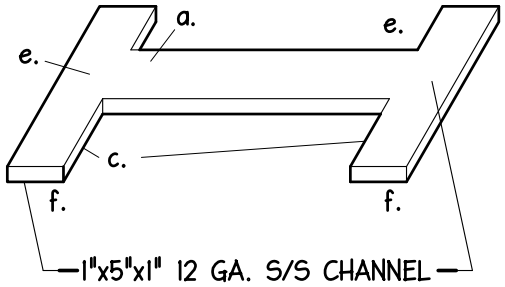

DISHTABLES

B.

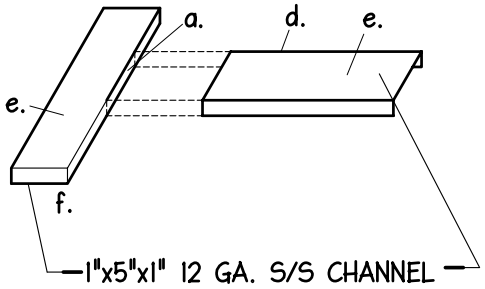

SINK DRAINBOARDS

C.

a. FULLY WELDED CONSTRUCTION.

b. ANGLE LOCATION - ENDS; SIDES OF TOP INSETS; INTERMEDIATES 24" ON CENTER.

c. CHANNEL LOCATION - ENDS AND INTERMEDIATE MAXIMUM 6'-6" O.C.

d. ADD CENTER CHANNEL WHEN DRAINBOARD LENGHT EXCEEDS 5'-6".

e. SECURE TOP TO FRAMEWORK WITH WELDED STUDS, S/S LOCKWASHERS AND CAP NUTS.

f. CLOSE CHANNEL AT FRONT ONLY.

NYIKOS ASSOCIATES, INC. Food Facilities Design/Consulting	DESCRIPTION: TABLE & DRAINBOARD FRAMEWORK	STANDARD DTL: 1.05 PAGE: 114000-44

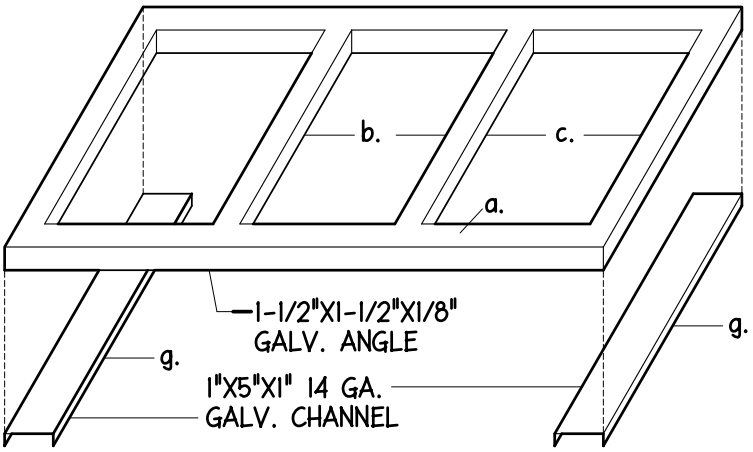

FRAME FOR STRUCTURALLY FORMED CABINET BODY

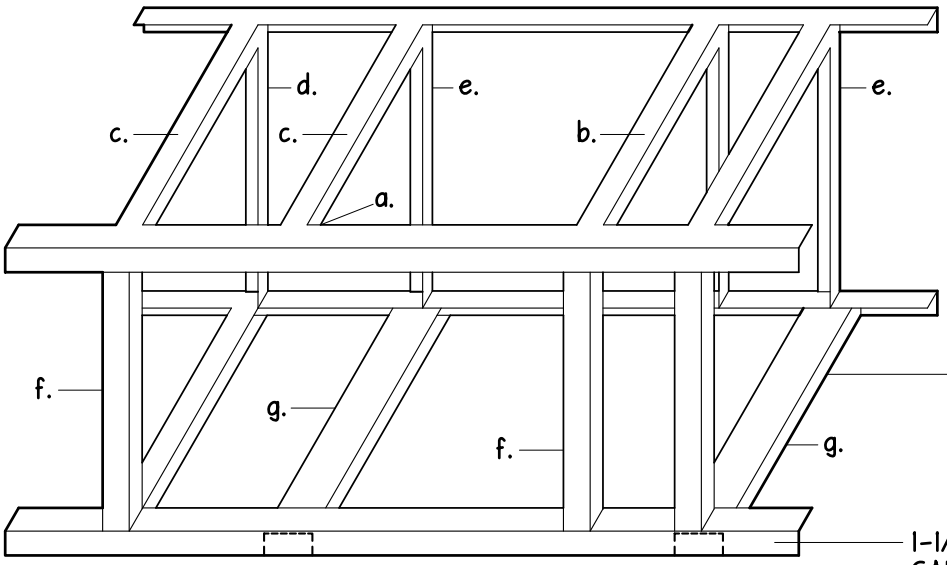

BOX FRAME FOR PANEL CABINET BODY

a. FULLY WELDED CONSTRUCTION.

b. SECURE TOP TO FRAMEWORK WITH WELDED STUDS, S/S LOCKWASHERS, AND CAP UNITS. MAXIMUM 15" ON CENTER.

c. TOP ANGLE LOCATION - ENDS; SIDES OF TOP INSETS; UNDER HEAVY EQUIPMENT LEGS; INTERMEDIATES 24" ON CENTER.

d. BACK ANGLE LOCATION - ENDS; INTERMEDIATE MAXIMUM 5'-6" ON CENTER.

e. CAFETERIA FRONT ANGLE (CHANNEL) LOCATION - ENDS; INTERMEDIATES TO CORRESPOND TO PILASTERS, SLIDE BRACKETS, PANEL SPACING, MAXIMUM 4'-0" ON CENTER. RE: STDS.-4.01 THRU 4.04.

f. WORK SIDE ANGLE LOCATION - ENDS; SIDE OF OPENINGS; INTERMEDIATES MAXIMUM 5'-6" ON CENTER.

g. BOTTOM LEG CHANNEL LOCATION - ENDS; INTERMEDIATES CORRESPOND TO FRONT PANEL SPACING; PILASTERS, SLIDE BRACKETS. MAXIMUM 5'-6" ON CENTER.

NYIKOS ASSOCIATES, INC. Food Facilities Design/Consulting	DESCRIPTION: COUNTER FRAMEWORK	STANDARD DTL: 1.06 PAGE: 114000-45

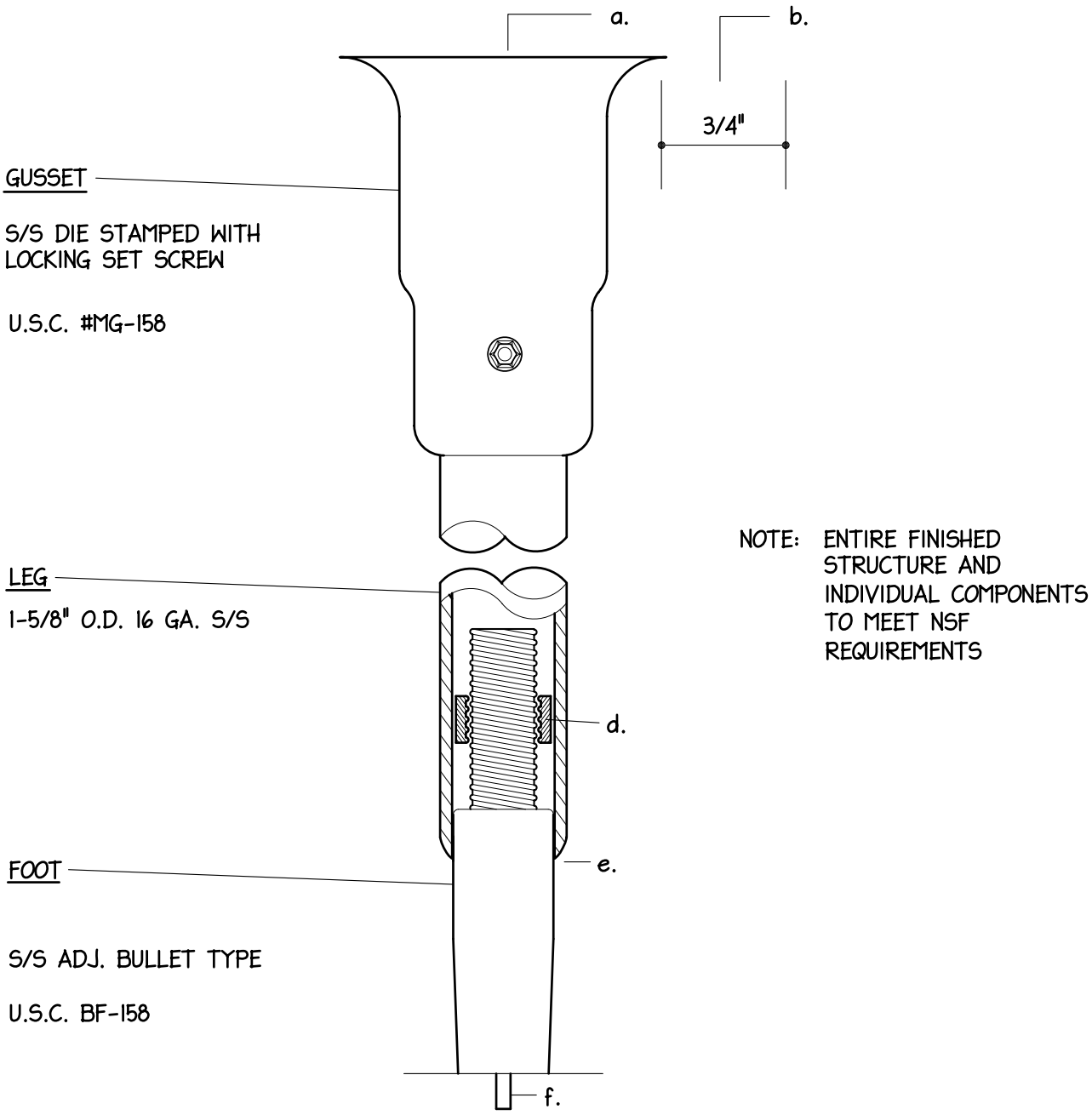

a. FULLY WELD GUSSET TO FRAMEWORK OR SINK

b. 3/4" MINIMUM CLEARANCE ALL AROUND

c. SET SCREW NOT VISIBLE TO WORKING SIDE OF EQUIPMENT.

d. MAXIMUM 1/32" CLEARANCE BETWEEN LEG AND FOOT

e. FOOT SET AT MIDPOINT TO ALLOW 1" ADJUSTMENT UP AND 1" DOWN. WITHOUT THREAD EXPOSURE.

f. LEGS UNSUPPORTED LATERALLY BY CROSSBACKING OR UNDERSHELVES SHALL BE PINNED TO FLOOR USING 1/4" DIA. X 1/2" PINS WELDED TO FOOT AND SET IN MATCHING HOLES IN THE FLOOR.

NYIKOS ASSOCIATES, INC. Food Facilities Design/Consulting	DESCRIPTION: TABLE & SINK LEGS	STANDARD DTL: 1.07 PAGE: 114000-46

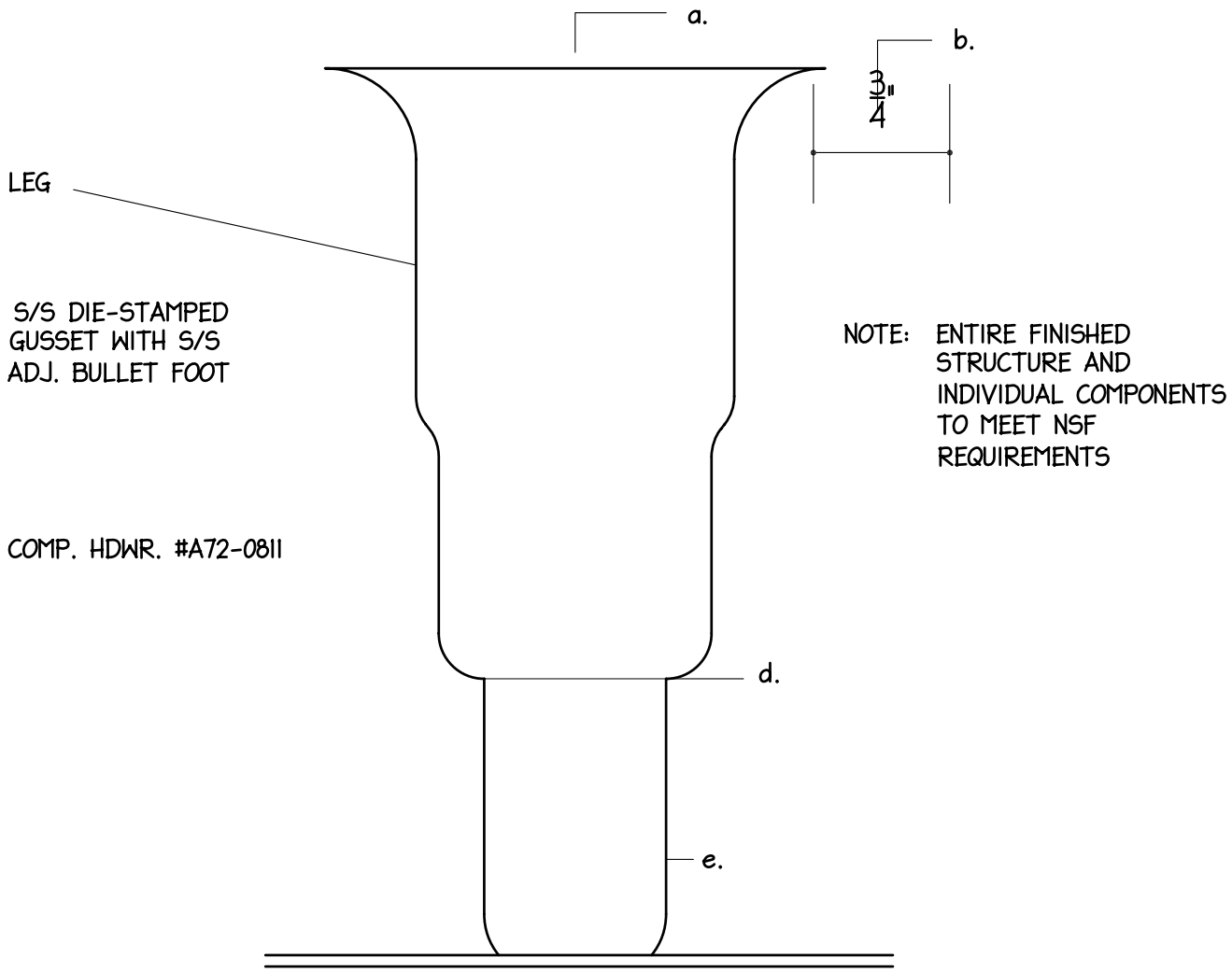

a. FULLY WELD TO FRAMEWORK CHANNEL

b. 3/4" MINIMUM CLEARANCE ALL AROUND

d. MAXIMUM 1/32" CLEARANCE BETWEEN LEG AND FOOT

e. FOOT SET AT MIDPOINT TO ALLOW 1" ADJUSTMENT UP AND 1" DOWN. WITHOUT THREAD EXPOSURE.

NYIKOS ASSOCIATES, INC. Food Facilities Design/Consulting	DESCRIPTION: COUNTER LEGS	STANDARD DTL: 1.08 PAGE: 114000-47

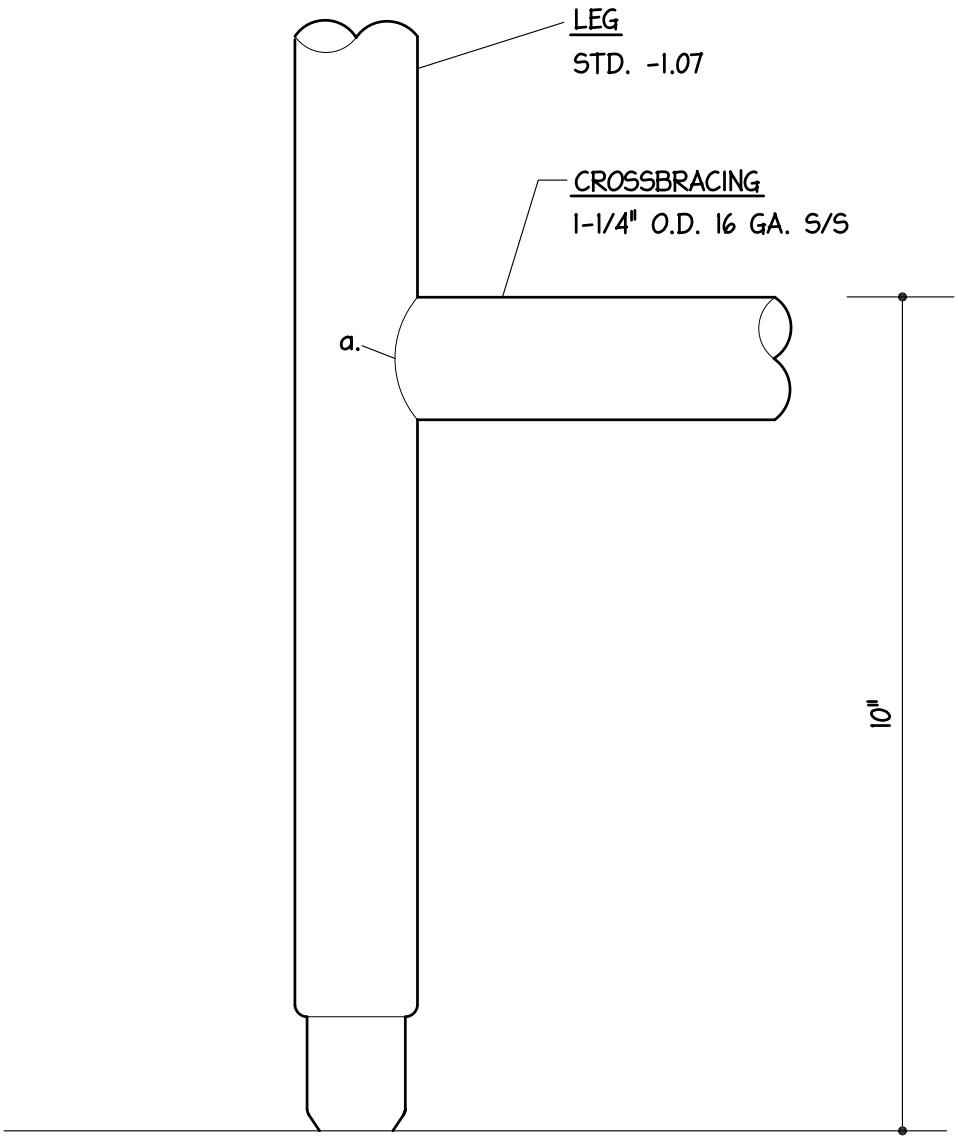

a. FULLY WELD, GRIND SMOOTH AND POLISH.

NYIKOS ASSOCIATES, INC. Food Facilities Design/Consulting	DESCRIPTION: CROSSBRACING	STANDARD DTL: 1.10 PAGE: 114000-48

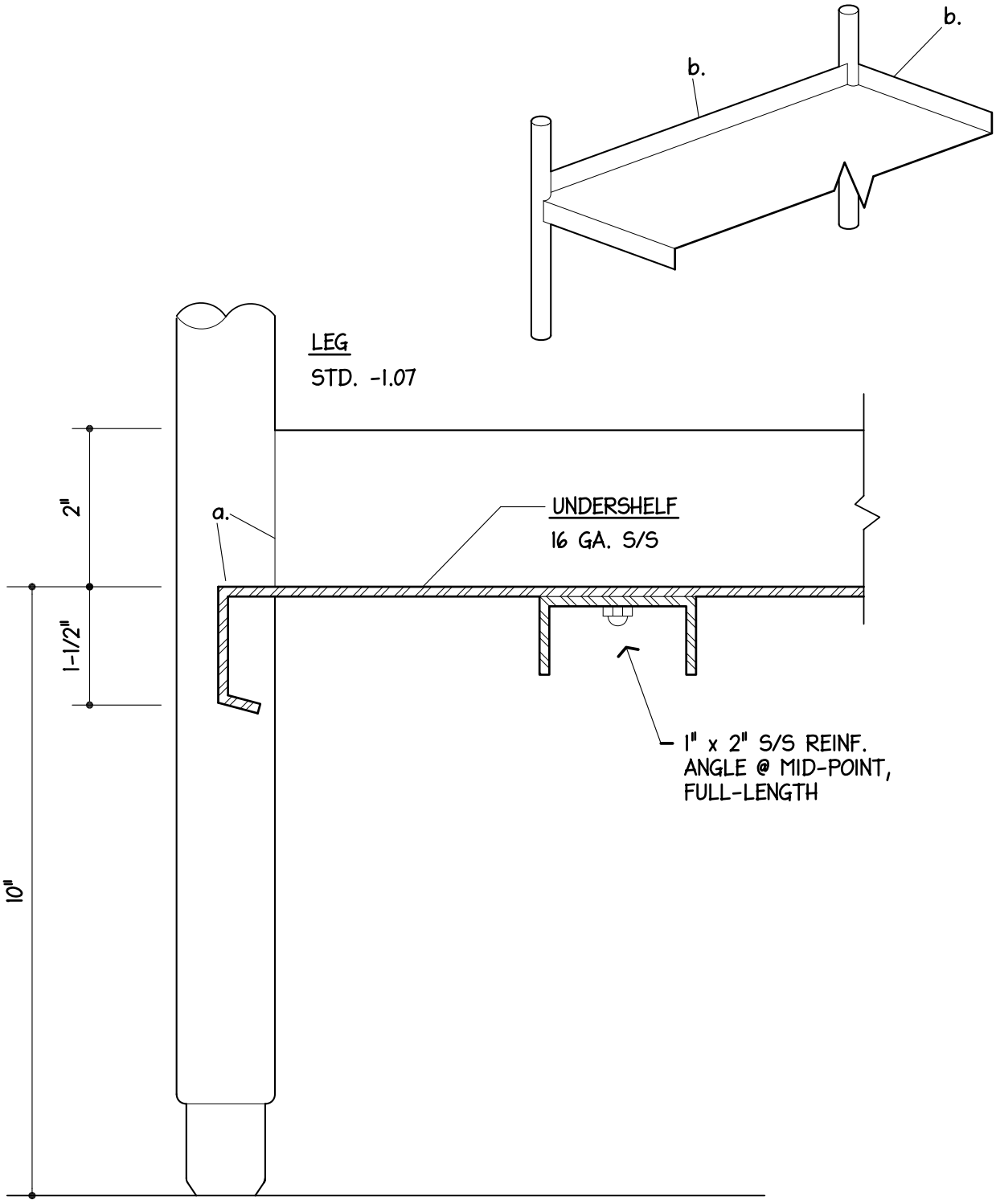

a. FULLY WELD, GRIND SMOOTH AND POLISH.

b. WHEN SPECIFIED, TURN REAR AND ENDS UP 2".

NYIKOS ASSOCIATES, INC. Food Facilities Design/Consulting	DESCRIPTION: UNDERSHELF	STANDARD DTL: 1.11
		PAGE: 114000-49

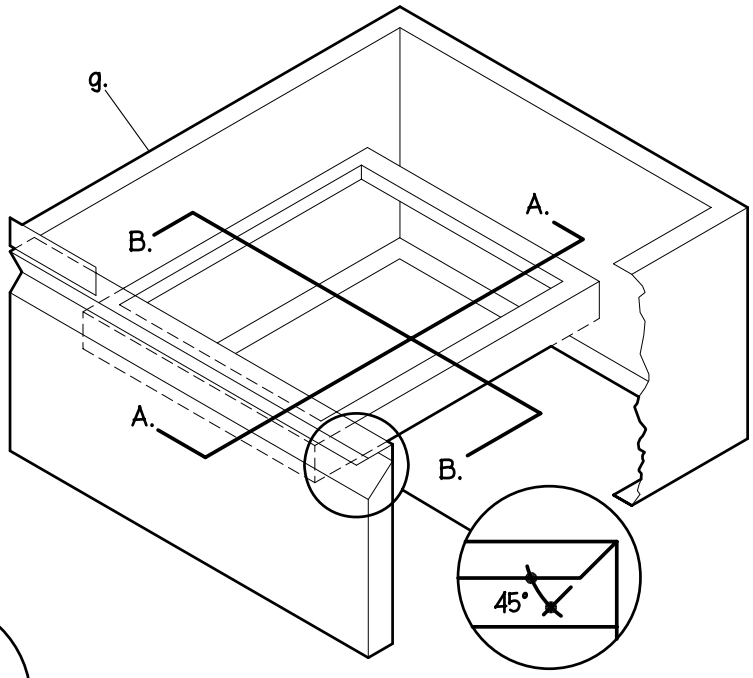

e. 16 GA. S/S ALL WELDED.

f. 3 PIECE SELF CLOSING DWR. SLIDE AS MFD. BY COMPONENT HARDWARE, S52 SERIES WITH S/S ROLLER BEARINGS. PITCH SLIDE DOWNWARD 3/8" PER FOOT FOR SELF-CLOSING ACTION.

g. 18 GA. S/S DWR. ENCLOSURE. ALL WELDED.

h. SEMI - RIGID FIBERGLASS SOUND DAMPENING.

j. HARD RUBBER DRAWER BUMPER EACH CORNER.

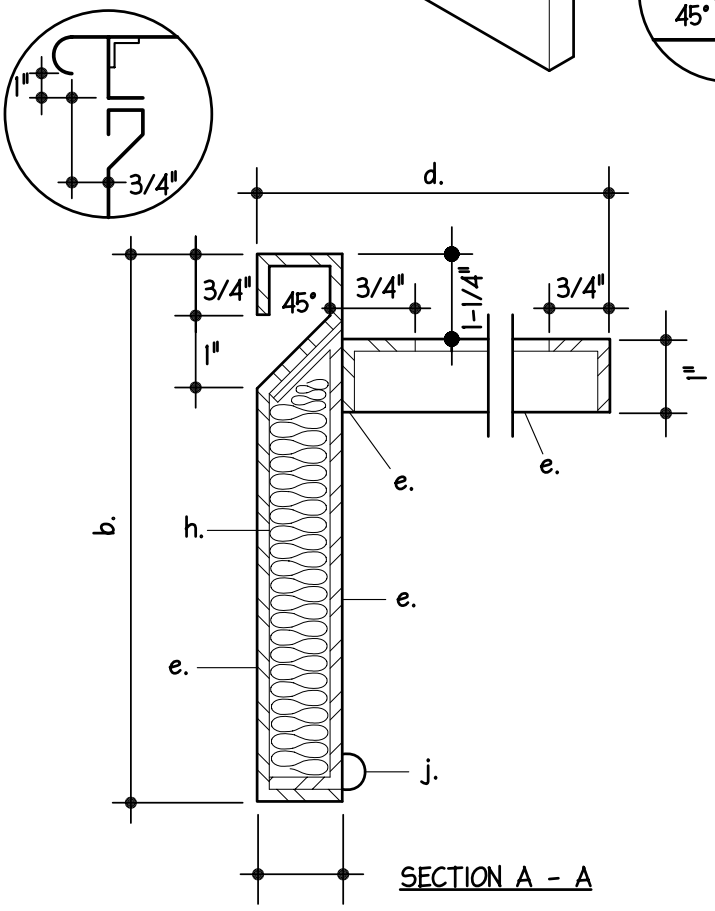

SECTION A - A

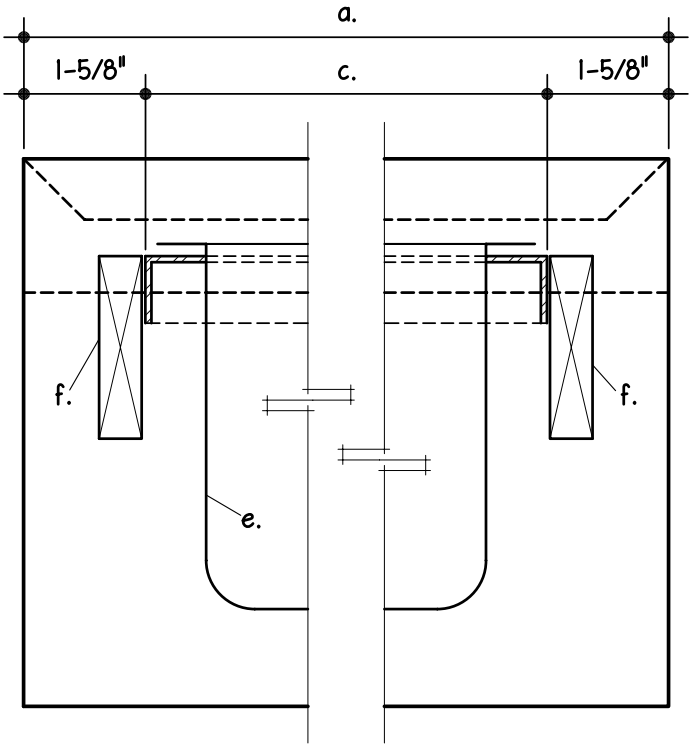

SECTION B -B

i. PROVIDE DIE - STAMPED #18 GA. S/S DWR. PANS AS FOLLOWS:

TYPE	NO.	PANS	a.	b.	c.	d.
I	1	20x20x5 DP.	25	7-1/2	21-3/4	22-3/4
II	1	20x20x8 DP.	25	10-1/2	21-3/4	22-3/4
III	1	12x20x4 DP.	25	6-1/2	21-3/4	14-1/2
IV	2	12x20x4 DP.	28	6-1/2	26-1/4	22-1/2
V	1	12x20x4 DP.	17	13-1/2	13-1/2	22-1/2

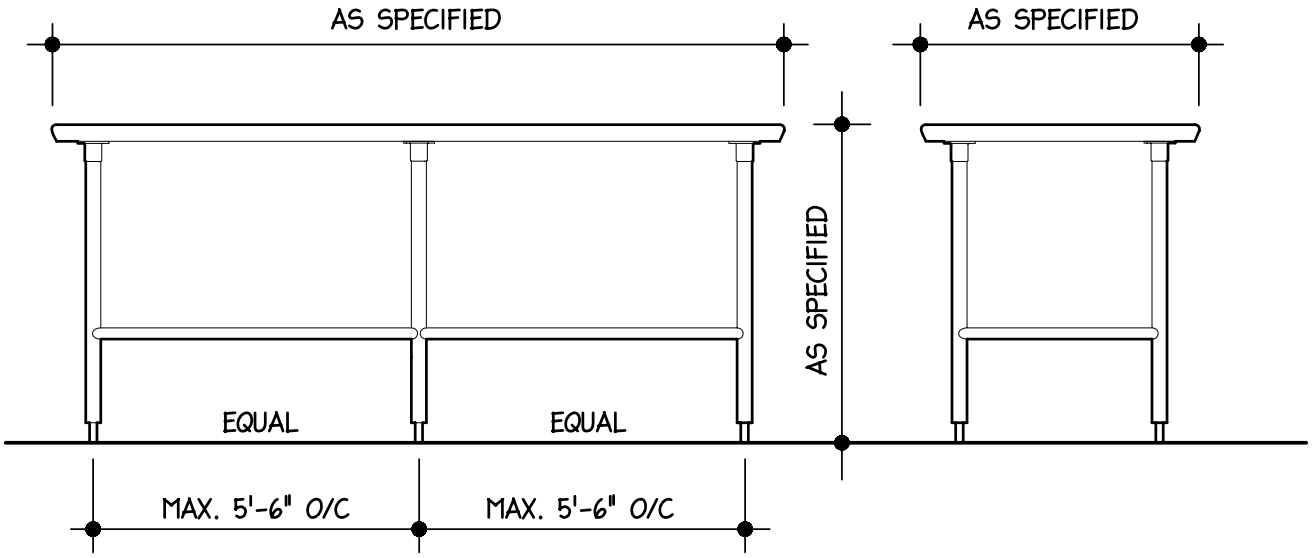

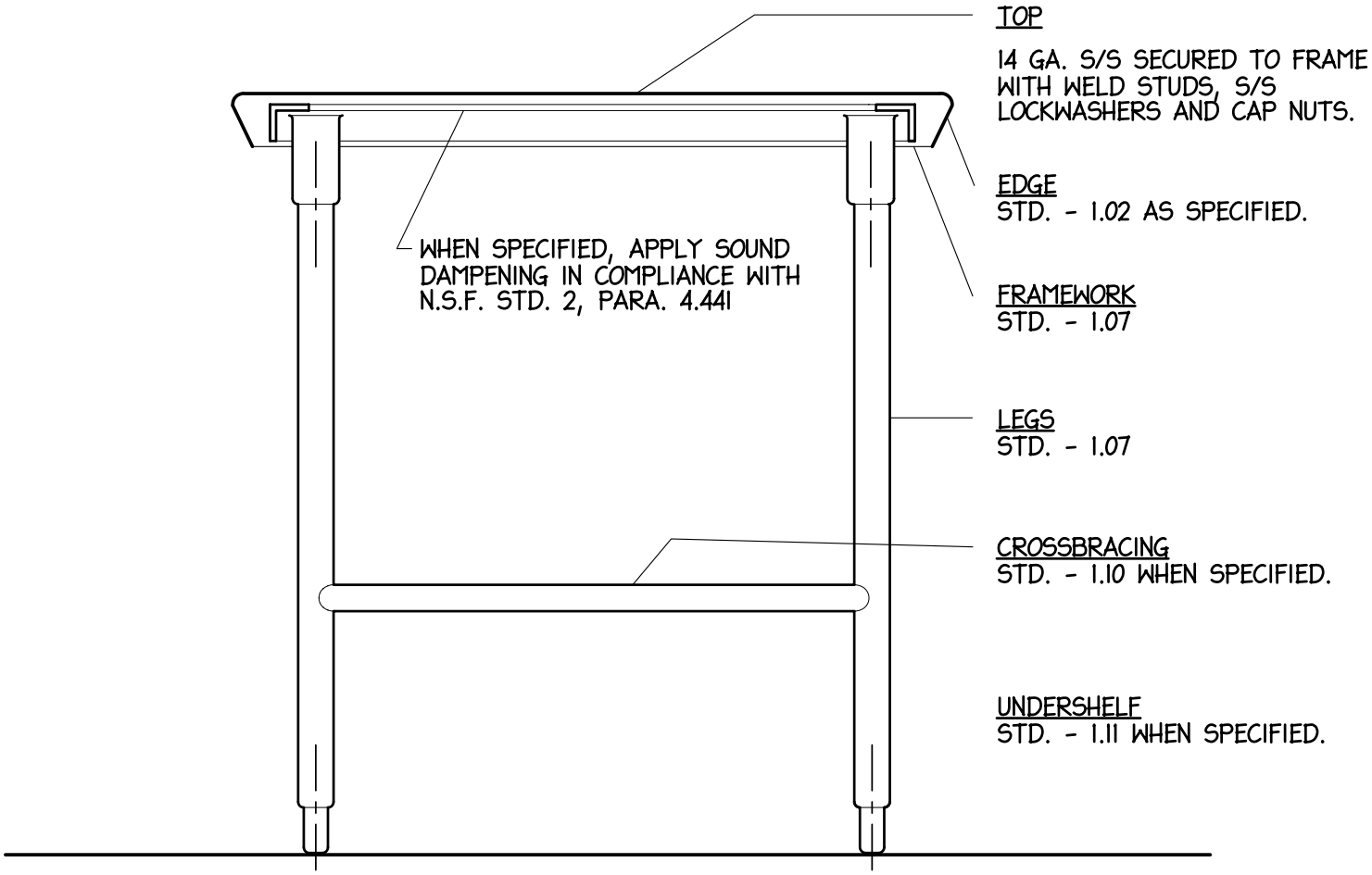

NYIKOS ASSOCIATES, INC. Food Facilities Design/Consulting	DESCRIPTION: **WORKTABLE**	STANDARD DTL: **2.01** PAGE: **114000-51**

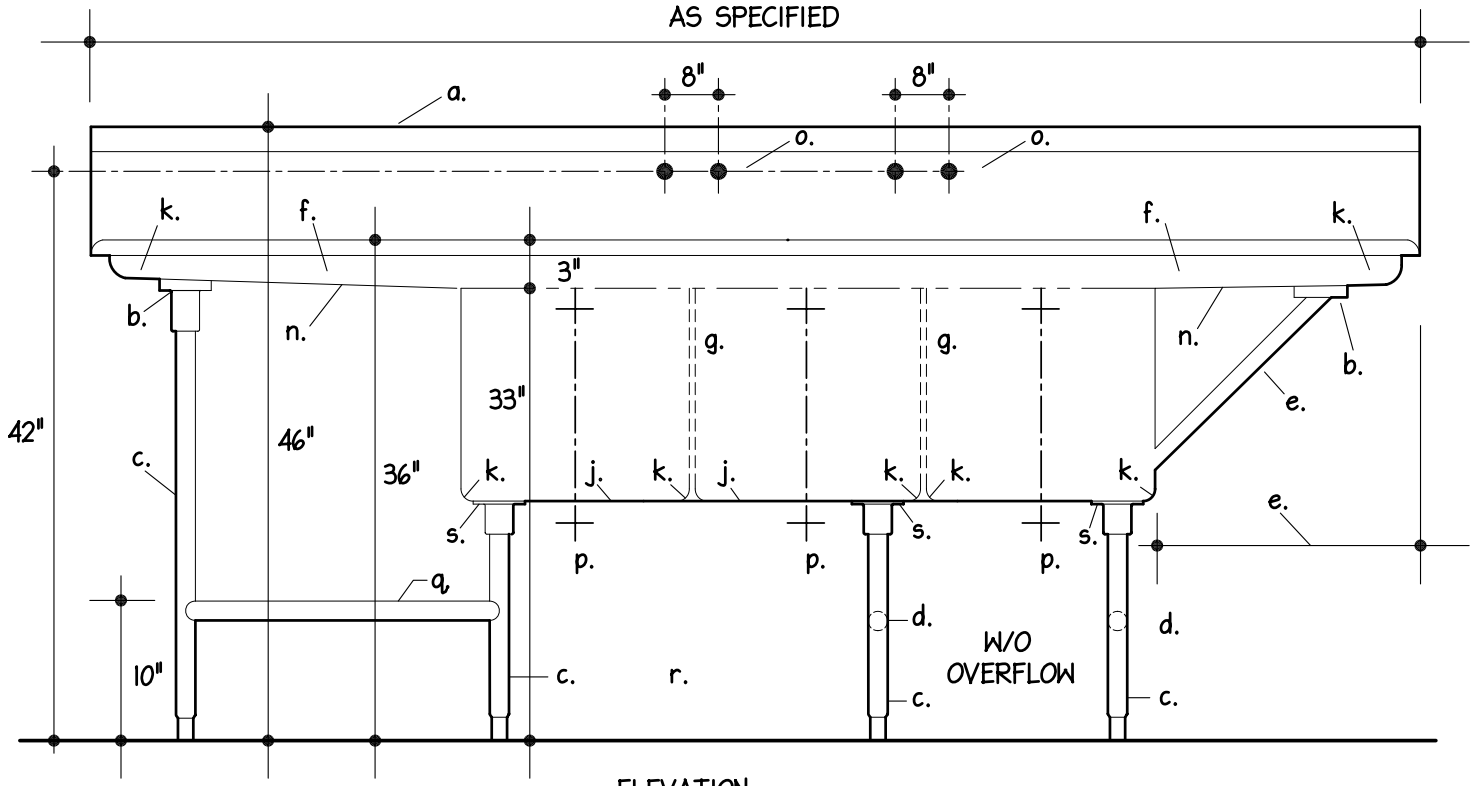

ELEVATION

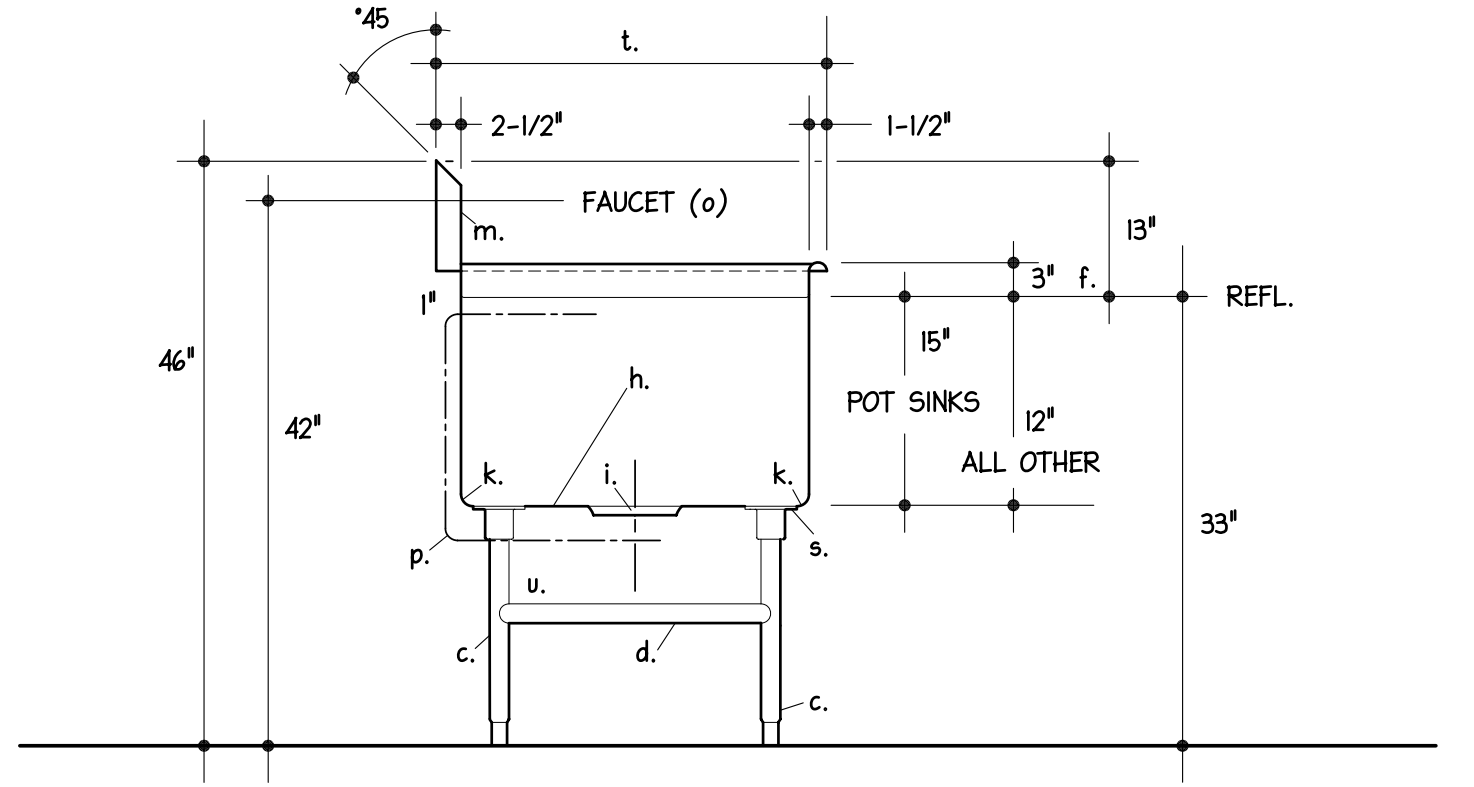

TYPICAL SECTION

a. MATERIAL - 14 GA. S/S.

b. STD. - 1.05c.

c. STD. - 1.07

d. STD. - 1.10

CONTINUED ON STD.- 3.01.1

e. DRAINBOARDS UP TO 24" IN LENGTH REQUIRE NO LEGS OR BRACES. DRAINBOARDS 25" TO 30" REQUIRE 1" O.D. 16 GA. S/S BRACE. DRAINBOARDS OVER 30" REQUIRE LEGS AND CHANNEL FRAMEWORK.

f. DRAINBOARDS SHALL PITCH TO SINK 1/8" PER FOOT OF LENGTH TO PROVIDE COMPLETE DRAINING WITHOUT POOLING. THE 3" HIGH RAISED ROLLED RIM AT THE SINK SHALL DECREASE IN HEIGHT TOWARD THE OUTER ENDS OF THE DRAINBOARD.

g. PARTITIONS BETWEEN COMPARTMENTS TO BE DOUBLE WALLED CONSTRUCTION WITH ROUNDED TOP, ALL WELDED INTEGRAL WITH SINK BODY.

h. BACK, BOTTOM, AND FRONT SHALL BE ONE CONTINUOUS PIECE WITH ENDS WELDED INTEGRAL, WITHOUT OVERLAPPING JOINTS OR OPEN SPACES, BETWEEN COMPARTMENTS.

i. WASTES SHALL BE SEATED IN DIE STAMPED DEPRESSIONS WITHOUT USE OF SOLDER, RIVETS OR WELDING. INSTALLED COMPONENTS SHALL BE FLUSH WITH SURROUNDING SURFACE.

j. EACH SINK COMPARTMENT TO BE PITCHED AND CREASED TO WASTE TO ASSURE COMPLETE DRAINING WITHOUT POOLING.

k. ENTIRE UNIT SHALL BE ALL WELDED COVE CORNERED CONSTRUCTION WITH VERTICAL AND HORIZONTAL AND INTERIOR CORNERS HAVING A 3/4" RADIUS.

l. STD.- 1.02 b EDGE.

m. STD. - 1.04a. BACKSPLASH.

n. UNDERSIDE OF DRAINBOARDS AND SINKS TO BE SPRAYED WITH SOUND DAMPENING IN COMPLIANCE WITH N.S.F. STD. 2 PARA 4.441 WHEN SPECIFIED.

o. FAUCETS - T¢S MODEL B-232 WITH AERATOR B-199, REMOVABLE MONEL SEATS AND 1/2" I.P.S. MALE INLETS.

p. WASTES - 2" NICKEL PLATED BRONZE ROTARY HANDLE WASTE S/S STRAINER PLATE WITH CHROME WITH CHROME PLATED BRASS CONNECTED OVERFLOW, STANDARD- KIEL HARDWARE MFG. CO. #1770-1015-1000.

q, REAR CROSS BRACING ONLY.

r. OMIT FRONT AND REAR LENGTHWISE CROSSBRACIG UNDER SINKS.

s. 12 GAUGE STAINLESS STEEL 6"x 6" TRIANGULAR SUPPORT PLATE WELDED TO UNDERSIDE OF SINKS.

t. WIDTH AS SPECIFIED.

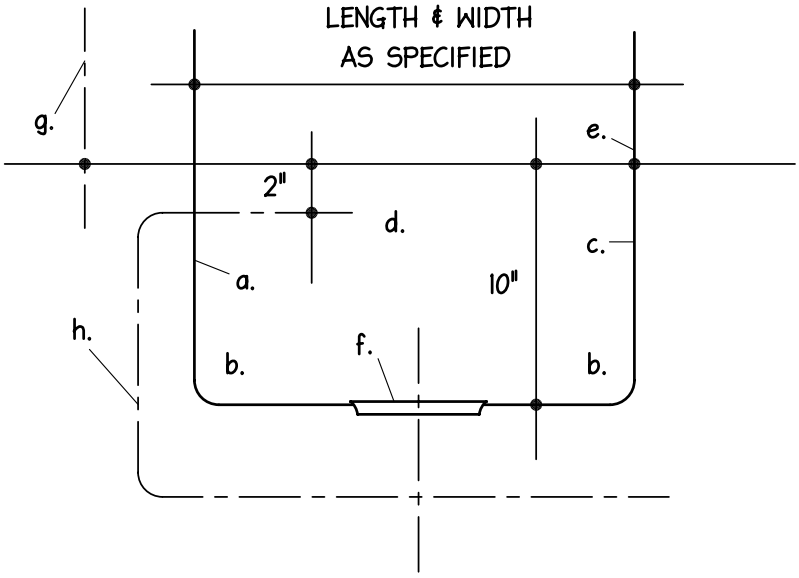

TYPICAL SECTION

a. MATERIAL - 14 GA. S/S

b. ENTIRE UNIT SHALL BE ALL WELDED COVE CORNERED CONSTRUCTION WITH VERTICAL AND HORIZONTAL AND INTERIOR CORNERS HAVING A 3/4" RADIUS.

c. TWO SIDES AND BOTTOM SHELL BE ONE CONTINUOUS PIECE WITH ENDS WELDED INTEGRAL WITHOUT OVERLAPPING JOINTS.

d. PARTITIONS BETWEEN COMPARTMENTS TO BE DOUBLE WALLED CONSTRUCTION WITH ROUNDED TOP, ALL WELDED INTEGRAL WITH SINK.

e. FULLY WELD SINK TO TOP WITHOUT OVERLAPPING JOINTS.

f. WASTES SHALL BE SEATED IN DIE STAMPED DEPRESSIONS WITHOUT USE OF SOLDER RIVETS OR WELDING . INSTALLED COMPONENTS SHALL BE FLUSH WITH SURROUNDING SURFACE.

g. FAUCET - T¢S MODEL B-222 FAUCET WITH B-199 AERATOR, REMOVABLE MONEL SEATS AND 1/2" IPS MALE INLETS.

h. WASTES - 1-1/2" NICKEL PLATED BRONZE ROTARY HANDLE WASTE AND S/S STRAINER PLATE WITH CHROME PLATED BRASS CONNECTED OVERFLOW, STANDARD-KEIL HARDWARE COMPANY NO. #1770-1015-1000.

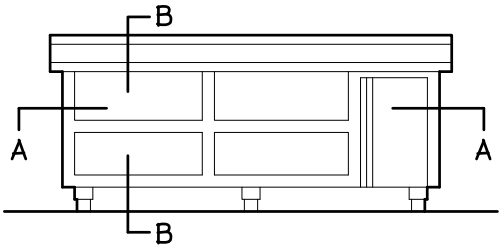

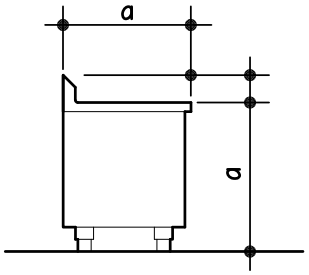

a. AS SPECIFIED

b. SEAL WITH SILICONE SEALANT

c. TIGHT JOINT. CLOSED BOTTOM.

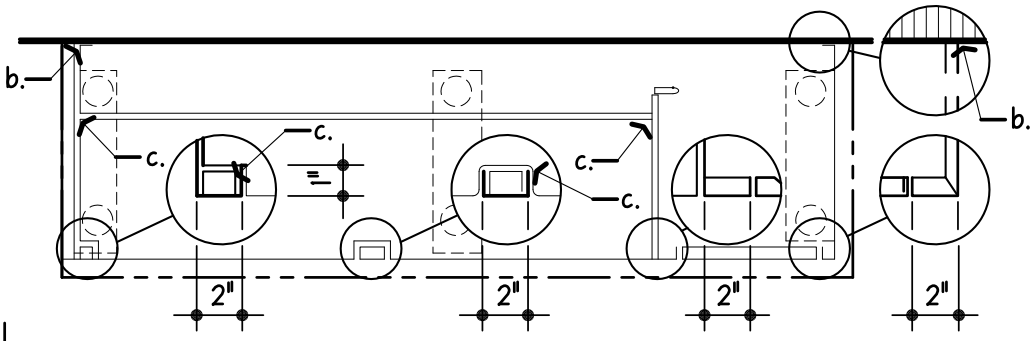

NOTE!:
POP RIVETS & EXPOSED STUDS & CAP NUTS NOT ACCEPTABLE.

SECTION A-A

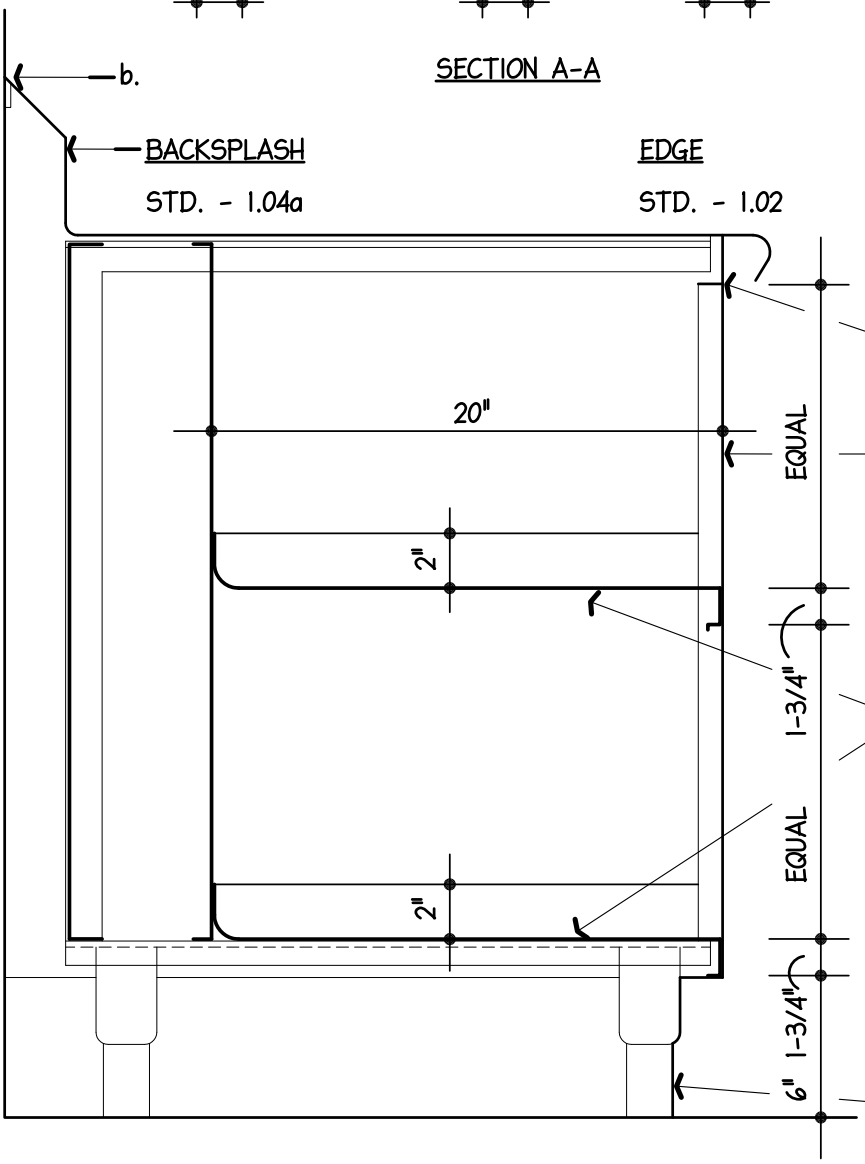

SECTION B-B

TOP

14 GA. S/S SECURED TO FRAMEWORK WITH WELDED STUDS, S/S L.W. AND CAP NUTS.

FRAMEWORK

STD. - 1.06

BODY

18 GA. S/S WITH INTEGRALLY FORMED STRUCTURAL ANGLES AND CHANNELS TACK WELDED.

SHELVES

16 GA. S/S SECURED TO LINER WITH TACK WELLS 1/2" LONG, 12" O/C.

DOOR

STD. - 4.25
- 4.26
- 4.27
- 4.28

LEGS

STD. - 1.08

NYIKOS ASSOCIATES, INC. Food Facilities Design/Consulting	DESCRIPTION: BACK COUNTER	STANDARD DTL: 4.01 PAGE: 114000-55

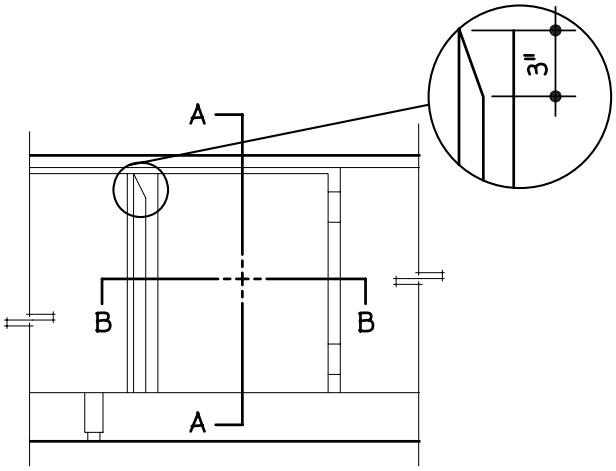

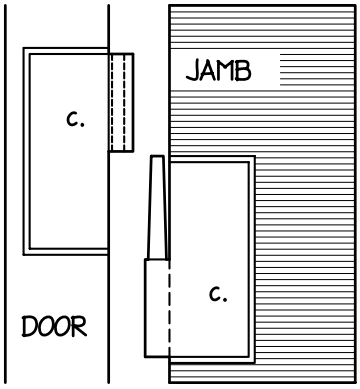

HINGE DETAIL

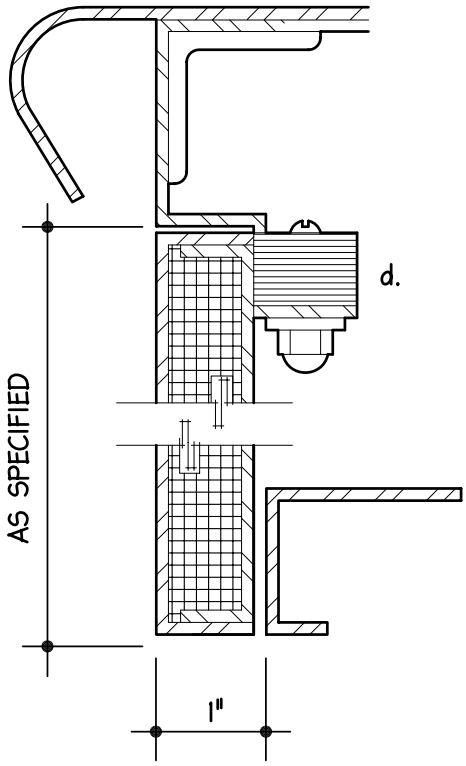

SECTION A-A

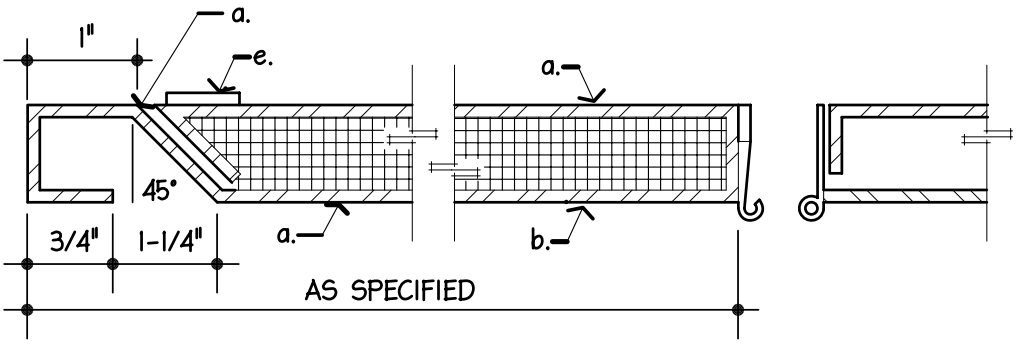

SECTION B-B

a. PANELING - 18 GA. S/S GA. EXTERIOR AND INTERIOR PANS TACK WELDED.

b. SEMI-RIGID FIBERGLASS SOUND DAMPENING.

c. HEAVY-DUTY S/S CLIP JOINT HINGE AS MFD. BY STANDARD-KEIL. SET IN FLUSH WITH SURFACE OF DOOR AND JAMB AND WELDED IN PLACE.

d. STANDARD-KEIL #2932-1010-3000 MAGNETIC CATCH MOUNTED FLUSH IN CUT OUT ON 1" TURN DOWN.

e. STEEL PLATE FOR MAGNETIC CATCH TACK WELDED TO INTERIOR DOOR PAN.

(END OF SECTION 114000)

SECTION 116143 - STAGE CURTAINS

PART 1 - GENERAL

1.1 RELATED DOCUMENTS

A. Drawings and general provisions of the Contract, including General and Supplementary Conditions and Division 01 Specification Sections, apply to this Section.

1.2 SUMMARY

A. Section includes stage curtains, draw-curtain tracks, and rigging accessories.

B. Related Sections:

1. Section 055000 "Metal Fabrications" for steel framing and supports for stage-curtain systems.

1.3 ACTION SUBMITTALS

A. Product Data: For each type of product indicated. For draw-curtain machines, include rated capacities, operating characteristics, and electrical characteristics.

B. Shop Drawings: Show fabrication and installation details for stage curtains. Include plans, elevations, sections, details, attachments to other work, and the following:

1. Operating clearances.
2. Requirements for supporting curtains, track, and equipment. Verify capacity of each track and rigging component to support loads.
3. Locations of equipment components, switches, and controls. Differentiate between manufacturer-installed and field-installed wiring.
4. Wiring Diagrams: For power, signal, and control wiring.

C. Samples for Initial Selection: For each type of stage curtain indicated. Include color charts showing the full range of colors, textures, and patterns available, together with a 12-inch- (300-mm-) square Sample (any color) of each type of fabric.

D. Curtain Fabric Samples for Verification: Full width by 36-inch- (900-mm-) long section of fabric from dye lot to be used for the Work, with specified treatments applied. Show complete pattern repeat. Mark top and face of fabric.

E. Delegated-Design Submittal: For rigging indicated to comply with performance requirements and design criteria, including analysis data signed and sealed by the qualified professional engineer licensed in Delaware responsible for their preparation.

1.4 CLOSEOUT SUBMITTALS

A. Operation and Maintenance Data: For stage curtains and rigging to include in operation and maintenance manuals.

1.5 QUALITY ASSURANCE

A. Installer Qualifications: Fabricator of stage curtains.

B. Fire-Test-Response Characteristics: Provide stage curtains with the fire-test-response characteristics indicated, as determined by testing identical products per test method indicated below by UL or a testing and inspecting agency acceptable to authorities having jurisdiction.

1. Flame-Resistance Ratings: Passes NFPA 701.

a. Permanently attach label to each fabric of curtain assembly indicating whether fabric is inherently and permanently flame resistant or treated with flame-retardant chemicals, and whether it requires retreatment after designated time period or cleaning.

C. Electrical Components, Devices, and Accessories: Listed and labeled as defined in NFPA 70, by a qualified testing agency, and marked for intended location and application.

1.6 PROJECT CONDITIONS

A. Field Measurements: Verify actual dimensions of openings and construction contiguous with stage curtains and rigging by field measurements before fabrication and indicate measurements on Shop Drawings.

1.7 WARRANTY

A. Special Warranty: Manufacturer's standard form in which manufacturer agrees to repair or replace components of rigging equipment that fail in materials or workmanship within specified warranty period.

1. Failures include, but are not limited to, faulty operation of rigging equipment.
2. Warranty Period: Two years from date of Substantial Completion.

PART 2 - PRODUCTS

2.1 CURTAIN FABRICS

A. General: Provide fabrics inherently and permanently flame resistant or chemically flame resistant by immersion treatment to comply with requirements indicated. Provide fabrics of each type and color from same dye lot.

B. Polyester Velour: Napped fabric of 100 percent polyester weighing not less than 22 oz./linear yd. (683 g/linear m), with pile height approximately 75 mils (1.9 mm); inherently and permanently flame resistant; 54-inch (1372-mm) minimum width.

1. Products: Subject to compliance with requirements, provide one of the following:

a. Dazian LLC; Angelo.
b. JB Martin Company; Dante.
c. J. L. de Ball America, Inc.; Diablo.
d. KM Fabrics, Inc.; Prestige.
e. Rose Brand; Encore.

2. Color: As selected by Architect from manufacturer's full range.

C. Muslin: Sheer, plain-woven fabric.
1. Fabric: 100 percent polyester weighing not less than 11.75 oz. /linear yd. (364 g/linear m); inherently and permanently flame resistant; 106-inch (2692-mm) minimum width.
2. Color: White.

2.2 CURTAIN FABRICATION

A. A. Description and Sizes: New draperies shall be as made in accordance with the following schedule and as shown in the drawings, proscenium opening size (28’-0” wide by 14’-0” high):

Description	Qty	Width	Height	Fullness	Fabric Type	Lining
Main Valance	1	38’-0”	5’-0”	100%	1	No
Main Curtain	2	20’-0”	15’-0”	100%	1	No

B. General: Affix permanent label, stating compliance with requirements of authorities having jurisdiction, in accessible location on curtain not visible to audience. Provide vertical seams unless otherwise indicated. Arrange vertical seams so they do not fall on faces of pleats. Do not use fabric cuts less than one-half width.

1. Vertical Hems: Provide vertical hems not less than 2 inches (50 mm) wide, and not less than 4 inches (102 mm) wide at borders, valance, teasers, and tormentors, with not less than a 1-inch (25-mm) tuck, and machine sew with no selvage material visible from front of curtain. Sew open ends of hems closed.
2. Leading Edge Turnbacks: Provide turnbacks formed by folding back not less than 12 inches (300 mm) of face fabric, with not less than a 1-inch (25-mm) tuck, and secure by sewing turnbacks vertically.
3. Top Hems: Reinforce top hems by double-stitching 3-1/2-inch- (89-mm-) wide, heavy jute webbing to top edge on back side of curtain with not less than 2 inches (50 mm) of face fabric turned under.
4. Pleats: Provide 100 percent fullness in curtains, exclusive of turnbacks and hems, by sewing additional material into 3-inch (75-mm) double-stitched box pleats sewn flat and spaced at 12 inches (300 mm) o.c. along top hem reinforcement.
5. Grommets: Brass No. 4.
   a. Pleated Curtains: Centered on each box pleat and 1 inch (25 mm) from corner of curtain; for snap hooks or S-hooks.

6. Bottom Hems: For curtains with fullness.
   a. For floor-length curtains, provide hems not less than 6 inches (150 mm) deep with separate, interior, 100 percent cotton, heavy canvas chain pockets equipped with proof coil chain. Stitch chain pockets so chain rides 2 inches (50 mm) above finished bottom edge of curtain. Sew open ends of hems closed.

      1) Proof Coil Chain: Grade 30, No. 8, zinc plated, 3/16 inch (4.7 mm), ASTM A 413/A 413M.

C. Scrim: Fabricate from scrim curtain fabric, sewn flat. Provide a continuous 6-inch (150-mm) pipe pocket at bottom with a 6-inch (150-mm) flap of same fabric in front of pocket. Provide double-stitched, 3-1/2-inch (89-mm) jute webbing at top with not less than No. 2 brass grommets spaced at 12 inches (300 mm) o.c. and 1 inch (25 mm) from corner of curtain. Provide not less than a 2-inch (50-mm) double-folded side hem and a 4-inch (100-mm) bottom hem.

D. Drop: Fabricate from muslin fabric, sewn flat, with either horizontal or vertical seams to suit Project and selvage to the rear. Provide 6-inch (150-mm) pipe pocket at bottom with a 6-inch (150-mm) flap of same fabric in front of pocket. Provide double-stitched, 3-1/2-inch (89-mm) jute webbing at top with not less than No. 2 brass grommets spaced at 12 inches (300 mm) o.c. and 1 inch (25 mm) from corner of curtain. Provide not less than a 2-inch (50-mm) double-folded side hem and a 4-inch (100-mm) bottom hem.

E. Snap Hooks: Track manufacturer's standard heavy-duty hooks, blind sewn to top hem of curtain.

2.3 STEEL-CURTAIN TRACK

A. Steel Track: Fabricate of roll-formed, galvanized, commercial-quality, zinc-coated steel sheet; complying with ASTM A 653/A 653M; G60 (Z180) coating designation with continuous bottom slot and with each half of track in one continuous piece; black paint finish.

1. Products: Subject to compliance with requirements, provide one of the following:

a. Automatic Devices Company; Besteel 170 series.
b. H & H Specialties Inc.; 200 series.

2. Thickness: 0.064 inch (1.63 mm).

B. Suspended Track: NPS 1-1/2 (DN 40) steel pipe stiffener for supporting both sections of suspended curved tracks.

C. Clamp and Bracket Hangers: Manufacturer's steel clamps and brackets of sufficient strength required to support loads for attaching track to overhead support.

D. Track Lap Clamp: Metal to match track channel for attaching double-sectioned track at center overlap.

E. Fold Guide: Equip carriers with rear-fold or backpack guide and rubber spacers to permit offstage curtain folding; sized for use with operating line if any.

F. Heavy-Duty Track System: Equip track with heavy-duty components. Provide end stops for track.

1. Curtain Carriers: Standard carriers of plated steel with a pair of nylon-tired ball-bearing wheels riveted parallel to body. Equip carriers with rubber or neoprene bumpers to reduce noise, and heavy-duty, plated-steel swivel eye and manufacturer's standard trim chain for attaching curtain snap or S-hook. Provide quantity of curtain carriers sufficient for track length, to suit curtain fabrication.

a. Master Curtain Carriers: One master carrier, for each leading curtain edge, of plated steel with two pairs of nylon-tired ball-bearing wheels and with two line guides per carrier.

2. End Pulleys and Floor Block: One dead-end, single-wheel pulley; one live-end, double-wheel pulley; and one adjustable, floor block; each with not less than 5-inch (125-mm) molded-nylon- or glass-filled-nylon-tired ball-bearing sheaves enclosed in steel housings. Provide pulleys with steel housing finished to match track and with bracket for securing off-stage curtain end. Provide an adjustable floor block to maintain proper tension on operating line with steel housing painted black.

2.4 DRAW-CURTAIN MACHINE

A. General: Provide operating machine of size and capacity recommended and provided by track manufacturer for curtain specified, with electric motor and factory-prewired motor controls, starter, gear-reduction unit, and remote controls. Coordinate wiring requirements and electrical characteristics with building electrical system.

1. Products: Subject to compliance with requirements, provide one of the following:

a. Automatic Devices Company; Autodrape Model No. 1454.
b. H & H Specialties Inc.; Atlas Silk Model No. 454.

B. Operator Type: Cable drum with grooved drum and cable tension device to automatically take up cable slack and retain cable in grooves.

C. Operator Type: Traction drive.

D. Motor Characteristics: Sufficient to start, accelerate, and operate connected loads at designated speeds within installed environment and with indicated operating sequence, and without exceeding nameplate rating or considering service factor. Comply with NEMA MG 1 and the following:

1. Voltage: 115 V.
2. Horsepower: 1/2.
3. Enclosure: Manufacturer's standard.
4. Duty: Continuous duty at ambient temperature of 105 deg F (40 deg C) and at altitude of 3300 feet (1005 m) above sea level.
5. Service Factor: 1.15 for open dripproof motors; 1.0 for totally enclosed motors.
6. Phase: One.

E. Limit Switches: Fully closed and fully opened preset stops.

2.5 CURTAIN RIGGING

A. Curtain Battens: Fabricate battens from steel pipe with a minimum number of joints. As necessary for required lengths, connect pipe with a drive-fit pipe sleeve not less than 18 inches (450 mm) long, and secure with four flush rivets, plug welds, threaded couplings, or another equally secure method. Shop-paint completed pipe battens with black paint and with a 1-inch- (25-mm-) wide yellow stripe at the center of each.

1. Steel Pipe: ASTM A 53/A 53M, Grade A, standard weight (Schedule 40), black, NPS 1-1/2 (DN 40) nominal diameter unless otherwise indicated.

B. Supports, Clamps, and Anchors: Sheet steel in manufacturer's standard thicknesses, galvanized after fabrication according to ASTM A 153/A 153M, Class B.

C. Trim and Support Cable: 1/4-inch- (6-mm-) diameter, 7x19 galvanized-steel cable with a breaking strength of 7000 lb (3175 kg). Provide fittings complying with cable manufacturer's written recommendations for size, number, and method of installation, including a drop-forged galvanized turnbuckle to allow for leveling.

D. Inserts, Bolts, Rivets, and Fasteners: Manufacturer's standard corrosion-resistant units.

PART 3 - EXECUTION

3.1 EXAMINATION

A. Examine areas and conditions, with Installer present, for compliance with requirements for supporting members, blocking, installation tolerances, clearances, and other conditions affecting performance of stage-curtain work. Examine inserts, clips, blocking, or other supports required to be installed by others to support tracks and battens.

B. Proceed with installation only after unsatisfactory conditions have been corrected.

3.2 INSTALLATION, GENERAL

A. Install stage-curtain system according to track manufacturer's and curtain fabricator's written instructions.

3.3 TRACK INSTALLATION

A. Ceiling-Mounted Tracks: Drill track at intervals not greater than manufacturer's written instructions for spacing, and fasten directly to structure.

B. Beam-Mounted Tracks: Install tracks by suspending from manufacturer's special beam clamps securely mounted to I-beam structure at spacing, according to manufacturer's written instructions.

C. Wall-Mounted Tracks: Install tracks by suspending from manufacturer's special bracket clamps securely mounted to wall construction at spacing, according to manufacturer's written instructions.

D. Spacing: Do not exceed the following dimensions between supports:

1. Heavy-Duty Track: 72 inches (1829 mm).

E. Install track for center-parting curtains with not less than 24-inch (600-mm) overlap of track sections at center, supported by special lap clamps.

3.4 CURTAIN INSTALLATION

A. Track Hung: Secure curtains to track carriers with snap hooks.

3.5 DRAW-CURTAIN-MACHINE INSTALLATION

A. Install draw-curtain machines by securely mounting to wall construction, according to manufacturer's written instructions.

3.6 DEMONSTRATION

A. Engage a factory-authorized service representative to train Owner's maintenance personnel to adjust, operate, and maintain stage curtains, draw-curtain machines, and tracks.

END OF SECTION 116143

SECTION 116623 - GYMNASIUM EQUIPMENT

PART 1 - GENERAL

1.1 RELATED DOCUMENTS

A. Drawings and general provisions of the Contract, including General and Supplementary Conditions and Division 01 Specification Sections, apply to this Section.

1.2 SUMMARY

A. Section Includes:

1. Basketball equipment.
2. Volleyball equipment.
3. Wall and column safety pads.

B. Related Requirements:

1. Division 3 Section "Cast-in-Place Concrete" for installation of floor insert sleeves or oversized recessed voids to be cast in concrete subfloors and footings.
2. Division 5 Section "Structural Steel" for structural supports not provided by gymnasium equipment manufacturer for supporting gymnasium equipment to building structure.
3. Division 9 Section “Resilient Athletic Flooring” for related floor finish.

1.3 DEFINITIONS

A. NFHS: National Federation of State High School Associations.

1.4 ACTION SUBMITTALS

A. Product Data: For each type of product.

1. If applicable, include assembly, disassembly, and storage instructions for removable equipment.
2. Motors: Show nameplate data, ratings, characteristics, and mounting arrangements.

B. Shop Drawings: For gymnasium equipment.

1. Include plans, elevations, sections, details, and attachments to other work.

C. Samples for Verification: For the following products:

1. Pad Fabric: Wall padding not less than 3 inches (76 mm) square, with specified treatments applied. Mark face of material.

1.5 CLOSEOUT SUBMITTALS

A. Operation and Maintenance Data: For gymnasium equipment to include in emergency, operation, and maintenance manuals.

1.6 QUALITY ASSURANCE

A. Installer Qualifications: An entity that employs installers and supervisors who are trained and approved by manufacturer.

1.7 FIELD CONDITIONS

A. Environmental Limitations: Do not install gymnasium equipment until spaces are enclosed and weatherproof, wet work in spaces is complete and dry, and ambient temperature and humidity conditions are maintained at the levels indicated for Project when occupied for its intended use.

B. Field Measurements: Verify position and elevation of floor inserts and layout for gymnasium equipment.

1.8 COORDINATION

A. Coordinate layout and installation of overhead-supported gymnasium equipment and suspension-system components with other construction including light fixtures, HVAC equipment, fire-suppression-system components, and partition assemblies.

1.9 WARRANTY

A. Special Warranty: Manufacturer agrees to repair or replace components of gymnasium equipment that fail in materials or workmanship within specified warranty period.

1. Failures include, but are not limited to, the following:

a. Basketball backboard failures including glass breakage.
b. Faulty operation of basketball backstops.

2. Warranty Period: 25 years from date of Substantial Completion.

PART 2 - PRODUCTS

2.1 MANUFACTURERS, GENERAL

A. Source Limitations: Obtain gymnasium equipment from single source from single manufacturer.

2.2 BASKETBALL EQUIPMENT

A. Manufacturers: Subject to compliance with requirements, provide products by one of the following:

1. Performance Sports Systems, Inc. (Basis-of-Design).
2. AALCO Manufacturing
3. Bison, Inc.
4. Jaypro Sports Construction Group.
5. Porter Athletic, Inc.

B. General: Provide equipment complying with requirements in NFHS's "NFHS Basketball Rules Book."

C. Protruding fasteners or exposed bolt heads on front face of backboards are not permitted.

D. Provide manufacturer's recommended connections complying with Section 055000 "Metal Fabrications" of size and type required to transfer loads to building structure.

E. Overhead-Supported Backstops:
   1. Folding Type: Provide manufacturer's standard assembly for forward-folding, front-braced backstop, with hardware and fittings to permit folding.
      a. Basis of Design: Performance Sports Systems No. 3107

   2. Framing: Steel pipe, tubing, and shapes. Design framing to minimize vibration during play.

      a. Center-Mast Frame: Welded and bolted or clamped with side sway bracing.
      b. Finish: Manufacturer's standard polyester powder-coat finish.

   3. Goal Height Adjuster: Adjustable from 8 to 10 feet (2.4 to 3 m) with gear-drive mechanism, locking in any position within adjustment range, with visible height scale attached to side of framing.
      a. Operation: Manual Height Adjuster with Power Wand
         1) Basis of Design: Performance Sports Systems No. 1130 with No. 1159

F. Backstop Safety Device: Designed to limit free fall if support cable, chains, pulleys, fittings, winch, or related components fail; with mechanical automatic reset; 6000-lb (2722-kg) load capacity; one per folding backstop.

   1. Retractor Device: Manufacturer's standard device designed to retract both support and safety cables, chains, and straps away from play of the basketball when backstop is in playing position; one per folding backstop.

G. Basketball Backboards:

   1. Shape and Size:

      a. Rectangular, 72 by 42 inches (1800 by 1067 mm) width by height.

   2. Backboard Material: With predrilled holes or preset inserts for mounting goals, and as follows:
      a. Glass: Not less than 1/2-inch- (13-mm-) thick, transparent tempered glass complying with ASTM C 1048 Kind FT (fully tempered) and with impact testing requirements in 16 CFR 1201 Category II or ANSI Z97.1 Class A for safety glazing. Provide glass with impact-absorbing resilient rubber or PVC gasket around perimeter in a fully welded, brushed-natural-finish, extruded-aluminum frame, with steel subframe, reinforcement, bracing, and mounting slots for mounting backboard frame to backboard support framing.

         1) Standard Mount: Provide steel corner reinforcement with mounting slots for mounting backboard frame to backstop support framing at standard mounting centers.
         2) Rim-Restraining Device: Complying with NCAA and NFHS rules and designed to ensure that basket remains attached if glass backboard breaks.
   3. Target Area and Border Markings: Marked in white, with manufacturer's standard pattern and stripe width.

H. Goal Mounting Assembly: Compatible with goal, backboard, and support framing; with hole pattern that is manufacturer's standard for goal attachment.

1. Glass Backboard Goal Mounting Assembly: Goal support framing and reinforcement designed to transmit load from goal to backboard frame and to minimize stresses on glass backboard.

I. Basketball Goals: Complete with flanges, braces, attachment plate, and evenly spaced loops welded around underside of ring.

1. Single-Rim Basket Ring Competition Goal: Materials, dimensions, and fabrication per manufacturer's standard design.
2. Type: Movable, breakaway design with manufacturer's standard breakaway mechanism and rebound characteristics identical to those of fixed, nonmovable ring.
3. Breakaway Characteristics: Positive-lock movable breakaway design, with manufacturer's standard breakaway mechanism including preset pressure release, set to release at 230-lb (105-kg) load, and automatic reset. Provide movable ring with rebound characteristics identical to those of fixed, nonmovable ring.
4. Field Adjustment: Provide rim that is field-adjustable for rebound elasticity without being removed from the backboard.
5. Mount: Front.
6. Net Attachment: No-tie loops for attaching net to rim without tying.
7. Finish: Polyester powder-coat finish.

J. Basketball Nets: 12-loop-mesh net, between 15 and 18 inches (380 to 460 mm) long, sized to fit rim diameter, and as follows:

1. Cord: Made from white nylon.

K. Backboard Safety Pads: Designed for backboard thickness indicated and extending continuously along bottom and up sides of backboard and over goal mounting and backboard supports per manufacturer's standard design.

1. Attachment: Bolt on.
2. Color: As selected by Architect from manufacturer's full range.

2.3 VOLLEYBALL EQUIPMENT

A. Manufacturers: Subject to compliance with requirements, provide products by one of the following:

1. Performance Sports Systems, Inc. (Basis-of-Design).
2. AALCO Manufacturing
3. Bison, Inc.
4. Jaypro Sports Construction Group.
5. Porter Athletic, Inc.

B. General: Provide equipment complying with requirements in "NFHS Volleyball Rule Book."

C. Floor Insert: Chrome-finished steel floor plate; and steel pipe sleeve, concealed by floor plate, with capped bottom end, sized with ID to fit post standards, not less than 9 inches (230 mm) long to securely anchor pipe sleeve below finished floor in concrete footing; with anchors designed for securing floor insert to floor substrate indicated; one per post standard.

2.4 SAFETY PADS

A. Manufacturers: Subject to compliance with requirements, provide products by one of the following:

1. Performance Sports Systems, Inc. (Basis-of-Design).
2. AALCO Manufacturing
3. Jaypro Sports Construction Group.
4. Porter Athletic, Inc.

B. Safety Pad Surface-Burning Characteristics: ASTM E 84 by UL or another testing and inspecting agency acceptable to authorities having jurisdiction:

1. Flame-Spread Index: 25 or less.
2. Smoke-Developed Index: 450 or less.

C. Pad Coverings: Provide safety pad fabric covering that is fabricated from puncture- and tear-resistant, PVC-coated polyester or nylon-reinforced PVC fabric, not less than 14-oz./sq. yd (475-g/sq. m) and treated with fungicide for mildew resistance; with surface-burning characteristics indicated[, and lined with fire-retardant liner].

D. Wall Safety Pads: Padded wall wainscot panels designed to be attached in a continuous row; each panel section consisting of fill laminated to backer board with visible surfaces fully covered by seamless fabric covering, free of sag and wrinkles and firmly attached to back of backer board.

1. Backer Board: Not less than 3/8-inch- (9.5-mm-) thick fire-retardant-treated plywood according to AWPA U1, UCFA Fire Retardant Interior.
2. Fire-Resistive Fill: Multiple-impact-resistant foam not less than 2-inch- (50-mm-) thick, fire-resistive neoprene; 6.0-lb/cu. ft. (96-kg/cu. m) density.
3. Size: Each panel section, 24 inches (610 mm) wide by not less than 60 inches (1524 mm) long.
4. Number of Modular Panel Sections: As required per drawings.
5. Installation Method: Concealed mounting Z-clips.
6. Fabric Covering Color(s): Selected by Architect from Manufacturer’s full range of colors.

E. Column Safety Pads: Pads covering exposed flange of columns to height indicated, consisting of not less than 1-1/4-inch- (32-mm-) thick, multiple-impact-resistant, closed-cell, polyethylene-foam filler, covered on both sides and all edges by fabric covering with backer board and manufacturer's standard anchorage to column.

1. Length: Each pad matching length of wall safety pads.
2. Fabric Covering Color(s): Match color of wall safety pads.

F. Cut-out Trim: Provide manufacturer's standard flanged cut-out trim kits for fitting pads around switches, receptacles, and other obstructions.

1. Color: Black.

2.5 MATERIALS

A. Aluminum: Alloy and temper recommended by manufacturer for use and finish type indicated.

1. Extruded Bars, Profiles, and Tubes: ASTM B 221 (ASTM B 221M).
2. Cast Aluminum: ASTM B 179.
3. Flat Sheet: ASTM B 209 (ASTM B 209M).

B. Steel: Comply with the following:

1. Steel Plates, Shapes, and Bars: ASTM A 36/A 36M.
2. Steel Tubing: ASTM A 500/A 500M or ASTM A 513, cold formed.

3. Steel Sheet: ASTM A 1011/A 1011M.

C. Support Cable: Manufacturer's standard galvanized-stranded-steel wire rope with a breaking strength of 7000 lb (3175 kg). Provide fittings complying with wire rope manufacturer's written instructions for size, number, and installation method.

D. Castings and Hangers: Malleable iron, complying with ASTM A 47/A 47M; grade required for structural loading.

E. Equipment Wall-Mounted Board: Wood, transparent finish, size, and quantity as required to mount gymnasium equipment according to manufacturer's written instructions.

F. Anchors, Fasteners, Fittings, and Hardware: Manufacturer's standard corrosion-resistant or noncorrodible units; concealed; tamperproof, vandal- and theft-resistant design.

G. Grout: Nonshrink, nonmetallic, premixed, factory-packaged, nonstaining, noncorrosive, nongaseous grout, complying with ASTM C 1107/C 1107 with minimum strength recommended in writing by gymnasium equipment manufacturer.

PART 3 - EXECUTION

3.1 EXAMINATION

A. Examine substrates, areas, and conditions, with Installer present, for compliance with requirements for play court layout, alignment of mounting substrates, installation tolerances, operational clearances, accurate locations of connections to building electrical system, and other conditions affecting performance of the Work.

1. Verify critical dimensions.
2. Examine wall assemblies, where reinforced to receive anchors and fasteners, to verify that locations of concealed reinforcements are clearly marked. Locate reinforcements and mark locations.

B. Proceed with installation only after unsatisfactory conditions have been corrected.

3.2 INSTALLATION, GENERAL

A. General: Comply with manufacturer's written installation instructions. Complete equipment field assembly where required.

B. Unless otherwise indicated, install gymnasium equipment after other finishing operations, including painting, are completed.

C. Permanently Placed Gymnasium Equipment and Components: Install rigid, level, plumb, square, and true; anchored securely to supporting structure; positioned at locations and elevations indicated; in proper relation to adjacent construction; and aligned with court layout.

1. Operating Gymnasium Equipment: Verify clearances for movable components of gymnasium equipment throughout entire range of operation and for access to operating components.

D. Floor Insert Setting: Grout sleeve for post standards in oversized, recessed voids in concrete slabs. Clean holes of debris. Position sleeve and fill void around sleeves with grout, mixed and placed to comply with grout manufacturer's written instructions. Protect portion of sleeve above subfloor and footing from

splatter. Verify that sleeves are set plumb, aligned, and at correct height and spacing; hold in position during placement and finishing operations until grout is sufficiently cured. Set insert so top surface of completed unit is flush with finished flooring surface.

E. Wall / Column Safety Pads: Mount with bottom edge at [4 inches (102 mm)] [dimension indicated on Drawings] above finished floor.

F. Cut-out Trim: Limit cuts in face of padding from trim unit's corner-to-corner outside dimensions. Install with ends of cuts concealed behind trim flange.

G. Anchoring to In-Place Construction: Use anchors and fasteners where necessary to secure built-in and permanently placed gymnasium equipment to structural support and to properly transfer load to in-place construction.

H. Connections: Connect electric operators to building electrical system.

3.3 ADJUSTING

A. Adjust movable components of gymnasium equipment to operate safely, smoothly, easily, and quietly, free from binding, warp, distortion, nonalignment, misplacement, disruption, or malfunction, throughout entire operational range. Lubricate hardware and moving parts.

3.4 CLEANING

A. After completing gymnasium equipment installation, inspect components. Remove spots, dirt, and debris and touch up damaged shop-applied finishes according to manufacturer's written instructions.

B. Replace gymnasium equipment and finishes that cannot be cleaned and repaired, in a manner approved by Architect, before time of Substantial Completion.

3.5 DEMONSTRATION

A. Train Owner's maintenance personnel to adjust, operate, and maintain gymnasium equipment.

END OF SECTION 116623

SECTION 122413 - ROLLER WINDOW SHADES

PART 1 - GENERAL

1.1 RELATED DOCUMENTS

A. Drawings and general provisions of the Contract, including General and Supplementary Conditions and Division 01 Specification Sections, apply to this Section.

1.2 SUMMARY

A. Section Includes:

1. Manually operated roller shades with single rollers.
2. Motor-operated roller shades with double rollers.

B. Related Requirements:

1. Division 06 Section "Miscellaneous Rough Carpentry" for wood blocking and grounds for mounting roller shades and accessories.
2. Division 26 Sections for electrical service and connection for motor operators, controls, limit switches, and other powered devices and for system disconnect switches for motorized shade operation.

1.3 ACTION SUBMITTALS

A. Product Data: For each type of product.

1. Include styles, material descriptions, construction details, dimensions of individual components and profiles, features, finishes, and operating instructions for roller shades.

B. Shop Drawings: Show fabrication and installation details for roller shades, including shadeband materials, their orientation to rollers, and their seam and batten locations.

1. Motor-Operated Shades: Include details of installation and diagrams for power, signal, and control wiring.

C. Samples for Initial Selection: For each type and color of shadeband material.

D. Roller-Shade Schedule: Use same designations indicated on Drawings.

1.4 CLOSEOUT SUBMITTALS

A. Maintenance Data: For roller shades to include in maintenance manuals.

1.5 MAINTENANCE MATERIAL SUBMITTALS

A. Furnish extra materials that match products installed and that are packaged with protective covering for storage and identified with labels describing contents.

1. Roller Shades: Full-size units equal to 5 percent of quantity installed for each size, color, and shadeband material indicated, but no fewer than two units.

1.6 QUALITY ASSURANCE

A. Installer Qualifications: Fabricator of products.

1.7 DELIVERY, STORAGE, AND HANDLING

A. Deliver roller shades in factory packages, marked with manufacturer, product name, and location of installation using same designations indicated on Drawings.

1.8 FIELD CONDITIONS

A. Environmental Limitations: Do not install roller shades until construction and finish work in spaces, including painting, is complete and dry and ambient temperature and humidity conditions are maintained at the levels indicated for Project when occupied for its intended use.

B. Field Measurements: Where roller shades are indicated to fit to other construction, verify dimensions of other construction by field measurements before fabrication and indicate measurements on Shop Drawings. Allow clearances for operating hardware of operable glazed units through entire operating range. Notify Architect of installation conditions that vary from Drawings. Coordinate fabrication schedule with construction progress to avoid delaying the Work.

PART 2 - PRODUCTS

2.1 MANUALLY OPERATED SHADES WITH SINGLE ROLLER **(WS-1)**

A. Basis-of-Design Product: Subject to compliance with requirements, provide MechoShade Systems – Suburban / 2 or comparable product by one of the following: (if mounting can meet Mecho Shade dimensions)
   1. Draper Inc. – Single Roller Clutch Operated FlexShade
   2. Hunter Douglas Contract. – FR Roller Shades (if mounting can meet Mecho Shade dimension)

B. Source Limitations: Obtain roller shades from single source from single manufacturer.

C. Chain-and-Clutch Operating Mechanisms: With continuous-loop bead chain and clutch that stops shade movement when bead chain is released; permanently adjusted and lubricated.

   1. Bead Chains: Nickel-plated metal.

      a. Loop Length: Full length of roller shade.
      b. Limit Stops: Provide upper and lower ball stops.
      c. Chain-Retainer Type: Chain tensioner, sill mounted.

D. Rollers: Corrosion-resistant steel or extruded-aluminum tubes of diameters and wall thicknesses required to accommodate operating mechanisms and weights and widths of shadebands indicated without deflection. Provide with permanently lubricated drive-end assemblies and idle-end assemblies designed to facilitate removal of shadebands for service.

1. Single-Roller Mounting Configuration: Side by side.

    a. Drive-End Location: Right side of inside face of shade.
    b. Direction of Shadeband Roll: Regular, from back of roller.
    c. Shadeband-to-Roller Attachment: Removable spline fitting integral channel in tube.

E. Mounting Hardware: Brackets or endcaps, corrosion resistant and compatible with roller mounting configuration, roller assemblies, operating mechanisms, installation accessories, and installation locations and conditions indicated.

F. Roller-Coupling Assemblies: Coordinated with operating mechanism and designed to join up to three inline rollers into a multiband shade that is operated by one roller drive-end assembly.

G. Shadeband:

1. Shadeband Material: Light-filtering fabric.
2. Shadeband Bottom (Hem) Bar: Steel or extruded aluminum.

    a. Type: Enclosed in sealed pocket of shadeband material.
    b. Color and Finish: As selected by Architect from manufacturer's full range.

H. Installation Accessories:

1. Front Fascia: Aluminum extrusion that conceals front and underside of roller and operating mechanism and attaches to roller endcaps without exposed fasteners.

    a. Shape: L-shaped.
    b. Height: Manufacturer's standard height required to conceal roller and shadeband when shade is fully open, but not less than 3 inches (76 mm).

2. Endcap Covers: To cover exposed endcaps.
3. Installation Accessories Color and Finish: As selected from manufacturer's full range.

2.2 MOTOR-OPERATED, DOUBLE-ROLLER SHADES **(WS-2)**

A. Basis-of-Design Product: Subject to compliance with requirements, provide MechoShade Systems – Electro/3 Standard Double Shade #20 or comparable product by one of the following: (if mounting can meet Mecho Shade dimensions)
1. Draper Inc. – Dual Roller Motorized FlexShade
2. Hunter Douglas Contract. – FR Roller Shades (if mounting can meet Mecho Shade dimension)

B. Source Limitations: Obtain roller shades from single source from single manufacturer.

C. Motorized Operating Systems: Provide factory-assembled, shade-operator systems of size and capacity and with features, characteristics, and accessories suitable for conditions indicated, complete with electric motor and factory-prewired motor controls, power disconnect switch, enclosures protecting controls and operating parts, and accessories required for reliable operation without malfunction. Include wiring from motor controls to motors. Coordinate operator wiring requirements and electrical characteristics with building electrical system.

1. Electrical Components: Listed and labeled as defined in NFPA 70, by a qualified testing agency, and marked for intended location and application.
2. Electric Motor: Manufacturer's standard tubular, enclosed in rollers.

a. Electrical Characteristics: Single phase, 110 V, 60 Hz.

3. Remote Control: Electric controls with NEMA ICS 6, Type 1 enclosure for recessed or flush mounting. Provide the following for remote-control activation of shades:

a. Keyed Control Station: Keyed, maintained-contact, three-position, switch-operated control station with open, close, and off functions. Provide two keys per station.
b. Color: As selected by Architect from manufacturer's full range.

4. Crank-Operator Override: Crank and gearbox operate shades in event of power outage or motor failure.
5. Limit Switches: Adjustable switches, interlocked with motor controls and set to stop shade movement automatically at fully raised and fully lowered positions.
6. Operating Features:

a. Group switching with integrated switch control; single faceplate for multiple switch cutouts.
b. Override switch.

D. Rollers: Corrosion-resistant steel or extruded-aluminum tubes of diameters and wall thicknesses required to accommodate operating mechanisms and weights and widths of shadebands indicated without deflection. Provide with permanently lubricated drive-end assemblies and idle-end assemblies designed to facilitate removal of shades for service.

1. Double-Roller Mounting Configuration: Side by side.
2. Inside Roller:

a. Drive-End Location: Right side of inside face of shade.
b. Direction of Shadeband Roll: Regular, from back of roller.

3. Outside Roller:

a. Drive-End Location: Right side of inside face of shade.
b. Direction of Shadeband Roll: Regular, from back of roller.

4. Shadeband-to-Roller Attachment: Removable spline fitting integral channel in tube.

E. Mounting Hardware: Brackets or endcaps, corrosion resistant and compatible with roller mounting configuration, roller assemblies, operating mechanisms, installation accessories, and installation locations and conditions indicated.

F. Roller-Coupling Assemblies: Coordinated with operating mechanism and designed to join up to three inline rollers into a multiband shade that is operated by one roller drive-end assembly.

G. Inside Shadebands:

1. Shadeband Material: Light-filtering fabric.
2. Shadeband Bottom (Hem) Bar: Steel or extruded aluminum.

a. Type: Enclosed in sealed pocket of shadeband material.
b. Color and Finish: As selected by Architect from manufacturer's full range.

H. Outside Shadebands:

1. Shadeband Material: Light-blocking fabric.

2. Shadeband Bottom (Hem) Bar: Steel or extruded aluminum.

   a. Type: Enclosed in sealed pocket of shadeband material.
   b. Color and Finish: As selected by Architect from manufacturer's full range.

I. Installation Accessories:

1. Recessed Shade Pocket: Rectangular, extruded-aluminum enclosure designed for recessed ceiling installation; with front, top, and back formed as one piece, end plates, and removable bottom closure panel.

   a. Height: Manufacturer's standard height required to enclose roller and shadeband when shade is fully open, but not less than 4 inches (102 mm).
   b. Provide pocket with lip at lower edge to support acoustical ceiling panel.
2. Installation Accessories Color and Finish: As selected from manufacturer's full range.

2.3 SHADEBAND MATERIALS

A. Shadeband Material Flame-Resistance Rating: Comply with NFPA 701. Testing by a qualified testing agency. Identify products with appropriate markings of applicable testing agency.

B. Light-Filtering Fabric: Woven fabric, stain and fade resistant.

1. Source: Roller-shade manufacturer.
2. Basis of Design – Mecho Shade Systems: ThermoVeil Basket Weave 1500
3. Type: PVC-coated polyester.
4. Weave: Basketweave.
5. Roll Width: 96 inches.
6. Orientation on Shadeband: Up the bolt.
7. Openness Factor: 3 percent.
8. Color: As selected by Architect from manufacturer's full range.

C. Light-Blocking Fabric: Opaque fabric, stain and fade resistant.

1. Source: Roller-shade manufacturer.
2. Basis of Design – Mecho Shade Systems: Midnite Blackout 0200 Series
3. Type: Acrylic-coated polyester.
4. Roll Width: 96 inches.
5. Orientation on Shadeband: Up the bolt.
6. Openness Factor: 0 percent.
7. Color: As selected by Architect from manufacturer's full range.

2.4 ROLLER-SHADE FABRICATION

A. Product Safety Standard: Fabricate roller shades to comply with WCMA A 100.1, including requirements for flexible, chain-loop devices; lead content of components; and warning labels.

B. Unit Sizes: Fabricate units in sizes to fill window and other openings as follows, measured at 74 deg F (23 deg C):

1. Between (Inside) Jamb Installation: Width equal to jamb-to-jamb dimension of opening in which shade is installed less 1/4 inch (6 mm) per side or 1/2-inch (13-mm) total, plus or minus 1/8 inch

(3.1 mm). Length equal to head-to-sill or -floor dimension of opening in which shade is installed less 1/4 inch (6 mm), plus or minus 1/8 inch (3.1 mm).

C. Shadeband Fabrication: Fabricate shadebands without battens or seams to extent possible except as follows:

1. Vertical Shades: Where width-to-length ratio of shadeband is equal to or greater than 1:4, provide battens and seams at uniform spacings along shadeband length to ensure shadeband tracking and alignment through its full range of movement without distortion of the material.

PART 3 - EXECUTION

3.1 EXAMINATION

A. Examine substrates, areas, and conditions, with Installer present, for compliance with requirements for installation tolerances, operational clearances, and other conditions affecting performance of the Work.

B. Proceed with installation only after unsatisfactory conditions have been corrected.

3.2 ROLLER-SHADE INSTALLATION

A. Install roller shades level, plumb, and aligned with adjacent units according to manufacturer's written instructions.

B. Electrical Connections: Connect motor-operated roller shades to building electrical system.

3.3 ADJUSTING

A. Adjust and balance roller shades to operate smoothly, easily, safely, and free from binding or malfunction throughout entire operational range.

3.4 CLEANING AND PROTECTION

A. Clean roller-shade surfaces after installation, according to manufacturer's written instructions.

B. Provide final protection and maintain conditions, in a manner acceptable to manufacturer and Installer, that ensure that roller shades are without damage or deterioration at time of Substantial Completion.

C. Replace damaged roller shades that cannot be repaired, in a manner approved by Architect, before time of Substantial Completion.

3.5 DEMONSTRATION

A. Engage a factory-authorized service representative to train Owner's maintenance personnel to adjust, operate, and maintain motor-operated roller shades.

END OF SECTION 122413

SECTION 123200 - MANUFACTURED WOOD CASEWORK

PART 1 - GENERAL

1.1 RELATED DOCUMENTS

A. Drawings and general provisions of the Contract, including General and Supplementary Conditions and Division 01 Specification Sections, apply to this Section.

1.2 SUMMARY

A. Section Includes:

1. Plastic-laminate-faced wood cabinets of stock design.
2. Solid-surfacing-material countertops.
3. Wall shelving.

B. Related Sections:

1. Division 06 Section "Miscellaneous Rough Carpentry" for wood blocking for anchoring manufactured wood casework.
2. Division 09 Section "Non-Structural Metal Framing" for reinforcements in metal-framed partitions for anchoring manufactured wood casework.

1.3 DEFINITIONS

A. MDF: Medium-density fiberboard.

B. Exposed Portions of Cabinets: Surfaces visible when doors and drawers are closed, including bottoms of cabinets more than 48 inches (1220 mm) above floor, and surfaces visible in open cabinets.

C. Semiexposed Portions of Cabinets: Surfaces behind opaque doors, such as interiors of cabinets, shelves, dividers, interiors and sides of drawers, and interior faces of doors. Tops of cases 78 inches (1980 mm) or more above floor are defined as semiexposed.

D. Concealed Portions of Cabinets: Surfaces not usually visible after installation, including sleepers, web frames, dust panels, and ends and backs that are placed directly against walls or other cabinets.

E. Hardwood Plywood: A panel product composed of layers or plies of veneer, or of veneers in combination with lumber core, hardboard core, MDF core, or particleboard core, joined with adhesive, and faced both front and back with hardwood veneers.

1.4 ACTION SUBMITTALS

A. Product Data: For each type of product indicated.

B. Shop Drawings: Include plans, elevations, sections, details, and attachments to other work. Show fabrication details, including types and locations of hardware. Show installation details, including field joints and filler panels. Indicate manufacturer's catalog numbers for casework.

C. Samples for Initial Selection: For cabinet finishes and for each type of top material indicated.

1.5 MAINTENANCE MATERIAL SUBMITTALS

A. Furnish complete touchup kit for each type and finish of manufactured wood casework provided. Include scratch fillers, stains, finishes, and other materials necessary to perform permanent repairs to damaged casework finish.

1.6 QUALITY ASSURANCE

A. Installer Qualifications: Manufacturer's authorized representative who is trained and approved for installation of units required for this Project.

B. Source Limitations: Obtain manufactured wood casework from single source from single manufacturer.

C. Quality Standard: Unless otherwise indicated, comply with requirements for modular cabinets in AWI's "Architectural Woodwork Quality Standards."

1. Provide AWI Quality Certification Program certificate indicating that manufactured wood casework complies with requirements.

D. Product Designations: Drawings indicate sizes, configurations, and finish material of manufactured wood casework by referencing designated manufacturer's catalog numbers. Other manufacturers' casework of similar sizes and door and drawer configurations, of same finish material, and complying with the Specifications may be considered. Refer to Division 01 Section "Product Requirements."

1.7 DELIVERY, STORAGE, AND HANDLING

A. Deliver manufactured wood casework only after painting, utility roughing-in, and similar operations that could damage, soil, or deteriorate casework have been completed in installation areas. If casework must be stored in other than installation areas, store only in areas where environmental conditions meet requirements specified in "Project Conditions" Article.

B. Keep finished surfaces covered with polyethylene film or other protective covering during handling and installation.

1.8 PROJECT CONDITIONS

A. Environmental Limitations: Do not deliver or install manufactured wood casework until spaces are enclosed and weathertight, wet work in spaces is complete and dry, work above ceilings is complete, and temporary HVAC system is operating and maintaining ambient temperature and humidity conditions at occupancy levels during the remainder of the construction period.

B. Field Measurements: Verify actual dimensions of construction contiguous with manufactured wood casework by field measurements before fabrication.

1.9 COORDINATION

A. Coordinate layout and installation of framing and reinforcements in walls and partitions for support of manufactured wood casework.

1.10 WARRANTY

A. Special Warranty: Manufacturer's standard form in which manufacturer agrees to repair or replace components of manufactured wood casework that fail in materials or workmanship within specified warranty period.

1. Failures include, but are not limited to, the following:

   a. Delamination of components or other failures of glue bond.
   b. Warping of components.
   c. Failure of operating hardware.
   d. Deterioration of finishes.

2. Warranty Period: Five years from date of Substantial Completion.

PART 2 - PRODUCTS

2.1 MANUFACTURERS

A. Basis-of-Design Product: Subject to compliance with requirements, provide TMI Systems or comparable product by one of the following:

   1. Plastic-Laminate-Faced Manufactured Casework:
      a. Case Systems Inc.
      b. Fisher Hamilton L.L.C.
      c. LSI Corporation of America; a Sagas International company.

2.2 MATERIALS, GENERAL

A. Maximum Moisture Content for Lumber: 7 percent for hardwood and 12 percent for softwood.

B. Hardwood Plywood: HPVA HP-1, either veneer core or particleboard core unless otherwise indicated.

C. Softwood Plywood: DOC PS 1.

D. Particleboard: ANSI A208.1, Grade M-2.

E. MDF: ANSI A208.2, Grade 130.

F. Hardboard: AHA A135.4, Class 1 Tempered.

G. Plastic Laminate: High-pressure decorative laminate complying with NEMA LD 3.

   1. Manufacturers: Subject to compliance with requirements, provide products by one of the following:
      a. Formica Corporation.
      b. Wilsonart International; Div. of Premark International, Inc.

H. Edgebanding for Plastic Laminate: Rigid PVC extrusions, through color with satin finish, 3 mm thick at doors and drawer fronts, 1 mm thick elsewhere.

   1. Select wood edgebanding for grain and color compatible with face veneers.

I. Solid-Surfacing Material: Homogeneous solid sheets of filled plastic resin complying with ISSFA-2.

   1. Manufacturers: Subject to compliance with requirements, provide products by one of the following:

      a. E. I. du Pont de Nemours and Company.
      b. Meganite Inc.; a division of The Pyrochem Group.

2. Type: Provide Standard type unless Special Purpose type is indicated.

2.3 CABINET MATERIALS

A. Exposed Cabinet Materials:

1. Plastic Laminate: Grade VGS.
2. Unless otherwise indicated, provide specified edgebanding on all exposed edges.

B. Semiexposed Cabinet Materials:

1. Plastic Laminate: Grade VGS.

a. Provide plastic laminate for semiexposed surfaces unless otherwise indicated.

2. Metal for Steel Drawer Pans: Cold-rolled, steel sheet.
3. Unless otherwise indicated, provide specified edgebanding on all semiexposed edges.

C. Concealed Cabinet Materials:

1. Plastic Laminate: Grade BKL.

2.4 DESIGN, COLOR, AND FINISH

A. Design: Provide manufactured wood casework of the following design:

1. Flush overlay with wire pulls.

B. Plastic-Laminate Colors, Patterns, and Finishes: As selected by Architect from plastic-laminate manufacturer's full range.

C. PVC Edgebanding Color: As selected from casework manufacturers full range.

D. Solid-Surfacing Material Colors and Patterns: As selected by Architect from manufacturer's full range.

2.5 CABINET FABRICATION

A. Plastic-Laminate-Faced Cabinet Construction: As required by referenced quality standard, but not less than the following:

1. Bottoms and Ends of Cabinets, and Tops of Wall Cabinets and Tall Cabinets: 3/4-inch (19-mm) particleboard, plastic-laminate faced.
2. Shelves: 3/4-inch (19-mm) plywood, plastic-laminate faced.
3. Backs of Cabinets: 1/2-inch (12.7-mm) particleboard, plastic-laminate faced.
4. Drawer Fronts: 3/4-inch (19-mm) particleboard, plastic-laminate faced.
5. Drawer Sides and Backs: 1/2-inch (12.7-mm) solid-wood or veneer-core hardwood plywood, with glued dovetail or multiple-dowel joints.
6. Drawer Bottoms: 1/4-inch (6.4-mm) hardwood plywood glued and dadoed into front, back, and sides of drawers. Use 1/2-inch (12.7-mm) material for drawers more than 24 inches (600 mm) wide.
7. Doors: 3/4-inch (19-mm) particleboard or MDF, plastic-laminate faced.

B. Filler Strips: Provide as needed to close spaces between cabinets and walls, ceilings, and indicated equipment. Fabricate from same material and with same finish as cabinets.

2.6 CASEWORK HARDWARE AND ACCESSORIES

A. Hardware, General: Unless otherwise indicated, provide manufacturer's standard satin-finish, commercial-quality, heavy-duty hardware.

1. Use threaded metal or plastic inserts with machine screws for fastening to particleboard except where hardware is through-bolted from back side.

B. Frameless Concealed Hinges (European Type): BHMA A156.9, Type B01602, 135 degrees of opening.

C. Pulls: Solid stainless-steel wire pulls, fastened from back with two screws. Provide 2 pulls for drawers more than 24 inches (600 mm) wide.

D. Door Catches: Powder-coated, nylon-roller spring catch. Provide 2 catches on doors more than 48 inches (1220 mm) high.

E. Drawer Slides: BHMA A156.9, Type B05091.

1. Heavy Duty (Grade 1HD-100 and Grade 1HD-200): Side mounted; full-extension type; zinc-plated, steel ball-bearing slides.
2. Box Drawer Slides: Grade 1, for drawers not more than 6 inches (150 mm) high and 24 inches (600 mm) wide.
3. File Drawer Slides: Grade 1HD-200, for drawers more than 6 inches (150 mm) high or 24 inches (600 mm) wide.

F. Drawer and Hinged Door Locks: Cylindrical (cam) type, 5-pin tumbler, brass with chrome-plated finish, and complying with BHMA A156.11, Grade 1.

1. Provide a minimum of two keys per lock and six master keys.
2. Provide locks on all doors and drawers.

G. Adjustable Shelf Supports: 2-pin locking plastic shelf rests complying with BHMA A156.9, Type B04013.

H. Grommets for Cable Passage through Countertops: 2-inch (51-mm) OD, black, molded-plastic grommets and matching plastic caps with slot for wire passage.

2.7 COUNTERTOPS

A. Countertops, General: Provide smooth, clean exposed tops and edges in uniform plane free of defects. Provide front and end overhang of 1 inch (25 mm) over base cabinets.

B. Solid-Surfacing-Material Tops: 1/2-inch- (12.7-mm-) thick, solid-surfacing material with front edge built up with same material].

1. Front: Straight, slightly eased at top.

a. Edge profile depth: 1 ½”

2. Backsplashes: 1/2-inch- (12.7-mm-) thick, solid-surfacing material; slightly eased at edge.

2.8 WALL SHELVING

A. Plastic-Laminate Shelving: Plastic-laminate sheet, Grade HGL or HGP, shop bonded to both sides of plywood. Sand surfaces to which plastic laminate is to be bonded.

1. Shelf Thickness: 3/4 inch (19 mm).
2. Edge Treatment: Finish both edges with rigid PVC extrusion, through color with satin finish, 3 mm thick.
3. Provide 4 shelves at each closet on adjustable tracks full height of closet.

B. Adjustable Shelf Supports: Powder-coated steel standards and shelf brackets, complying with BHMA A156.9, Types B04102 and B04112, surface mounted.

PART 3 - EXECUTION

3.1 EXAMINATION

A. Examine areas, with Installer present, for compliance with requirements for installation tolerances, location of framing and reinforcements, and other conditions affecting performance of manufactured wood casework.

B. Proceed with installation only after unsatisfactory conditions have been corrected.

3.2 CASEWORK INSTALLATION

A. Install level, plumb, and true; shim as required, using concealed shims. Where manufactured wood casework abuts other finished work, apply filler strips and scribe for accurate fit, with fasteners concealed where practical.

B. Base Cabinets: Set cabinets straight, level, and plumb. Adjust subtops within 1/16 inch (1.5 mm) of a single plane. Fasten cabinets to masonry or framing, wood blocking, or reinforcements in walls and partitions with fasteners spaced 24 inches (600 mm) o.c. Bolt adjacent cabinets together with joints flush, tight, and uniform. Align similar adjoining doors and drawers to a tolerance of 1/16 inch (1.5 mm).

1. Where base cabinets are not installed adjacent to walls, fasten to floor at toe space with fasteners spaced 16 inches (400 mm) o.c. Secure sides of cabinets to floor, where they do not adjoin other cabinets, with not less than two fasteners.

C. Wall Cabinets: Hang cabinets straight, level, and plumb. Adjust fronts and bottoms within 1/16 inch (1.5 mm) of a single plane. Fasten to hanging strips, masonry, or framing, blocking, or reinforcements in walls or partitions. Align similar adjoining doors to a tolerance of 1/16 inch (1.5 mm).

1. Fasten through back, near top and bottom, at ends, and not more than 16 inches (400 mm) o.c.
2. Use toggle bolts at hollow masonry.
3. Use expansion anchors at solid masonry.
4. Use No. 10 wafer-head sheet metal screws through metal backing or metal framing behind wall finish at metal-framed partitions.

D. Install hardware uniformly and precisely. Set hinges snug and flat in mortises unless otherwise indicated. Adjust and align hardware so moving parts operate freely and contact points meet accurately. Allow for final adjustment after installation.

E. Adjust casework and hardware so doors and drawers operate smoothly without warp or bind. Lubricate operating hardware as recommended by manufacturer.

3.3 INSTALLATION OF TOPS

A. Field Jointing: Where possible make in the same manner as shop jointing, using dowels, splines, adhesives, and fasteners recommended by manufacturer. Prepare edges to be joined in shop so Project-

site processing of top and edge surfaces is not required. Locate field joints where shown on Shop Drawings.

1. Secure field joints in plastic-laminate countertops with concealed clamping devices located within 6 inches (150 mm) of front and back edges and at intervals not exceeding 24 inches (600 mm). Tighten according to manufacturer's written instructions to exert a constant, heavy-clamping pressure at joints.

B. Secure tops to cabinets with Z- or L-type fasteners or equivalent, using two or more fasteners at each front, end, and back.

C. Abut top and edge surfaces in one true plane, with internal supports placed to prevent deflection.

D. Secure backsplashes and end splashes to tops with concealed metal brackets at 16 inches (400 mm) o.c. and walls with adhesive.

E. Seal junctures of tops, splashes, and walls with mildew-resistant silicone sealant or another permanently elastic sealing compound recommended by countertop material manufacturer.

3.4 INSTALLATION OF SHELVING

A. Securely fasten shelf standards to masonry, partition framing, wood blocking, or reinforcements in partitions.

1. Fasten shelf standards at ends and not more than 12 inches (300 mm) o.c.
2. Use toggle bolts at hollow masonry.
3. Use expansion anchors at solid masonry.
4. Use self-tapping sheet metal screws in metal framing or metal backing at metal-framed partitions. Do not use wall anchors in gypsum board.

B. Install shelf standards plumb and at heights to align shelf brackets for level shelves. Space standards not more than 36 inches (900 mm) o.c.

C. Install shelving level and straight, closely fitted to other work where indicated.

3.5 CLEANING AND PROTECTING

A. Repair or remove and replace defective work as directed on completion of installation.

B. Clean finished surfaces, touch up as required, and remove or refinish damaged or soiled areas to match original factory finish, as approved by Architect.

C. Protection: Provide 6-mil (0.15-mm) plastic or other suitable water-resistant covering over countertop surfaces. Tape to underside of countertop at a minimum of 48 inches (1220 mm) o.c. Remove protection at Substantial Completion.

END OF SECTION 123200

SECTION 123280 – MEDIA SHELVING AND CASEWORK

PART 1 - GENERAL

1.1 RELATED DOCUMENTS

A. Drawings and general provisions of the Contract, including General and Supplementary Conditions and Division 01 Specification Sections, apply to this Section.

1.2 SUMMARY

A. Section includes:

1. Furnishing and installation of steel book stack shelving in Media Center.

1.3 SUBMITTALS

A. Product Data: Submit applicable reference standards, performance data, and application recommendations and limitations.

B. Shop Drawings: Submit design and installation drawings showing product components in assembly with adjacent materials and products.

C. Quality Control Submittals:

1. Manufacturer's installation instructions.

D. Contract Closeout Submittals:

1. Maintenance recommendations.
2. Warranty.

1.4 DELIVERY, STORAGE AND HANDLING

A. Pack and ship to avoid damage according to manufacturer's recommendations:

1. Finish and assemble components in factory before shipment.
2. Ship components in individual, sealed, labeled cartons.
3. Deliver components to room designated for installation.

B. Do not accept or install damaged products at the site.

C. Store products in heated indoor storage near point of installation. Retain protective packaging until installing.

1.5 PROJECT CONDITIONS

A. Environmental Requirements: Do not install cabinets until all mortar, wet and dust producing work is completed.

B. Field Measurements: Obtain required field measurements from the Contractor and indicate on Shop Drawings.

1.6 WARRANTY

A. Provide manufacturer's written warranty that products not in accordance with requirements of Contract Documents within three years after commencement of warranties shall be corrected promptly after receipt of written notice from Owner.

PART 2 - PRODUCTS

2.1 ACCEPTABLE MANUFACTURERS

A. Basis-of-Design Product: Subject to compliance with requirements, provide products by Montel and Worden Company or equivalent product by one of the following:

1. Brodart Contract Furniture, McElhatten, PA.
2. Library Interiors, Inc., California, MD
3. Russwood Library Furniture, Raleigh, NC.

B. Manufacturers offering substitute products must obtain approval prior to bidding as required under provisions of Instructions to Bidders.

1. Manufacturer requesting prior approval must submit evidence of minimum 20 years experience manufacturing media education furniture.
2. Manufacturer requesting prior approval must submit samples of materials, construction features and finishes.

2.2 PRODUCTS

A. Basis of Design: Steel shelving units by Montel and end panels by The Worden Company.

2.3 SYSTEM DESCRIPTION

A. Type of Book stack:

1. Steel book stacks shall be cantilever, unit construction design with individual welded frame assemblies.
2. The modular construction shall be such that all components of a book stack section may be removed from any range without in any way disturbing the adjacent units, so that any range may be divided for the purpose of rearrangements without the necessity of procuring additional components. Any bracing which prevents insertion of oversize material (past the center line) on any base or adjustable shelf is not acceptable.

B. Sheet metal is to be cold rolled, Class 1 steel. Gauge thicknesses are U.S. standard with the following minimum requirements:

1. Upright Columns of welded frame: 16 gauge.
2. Top and Bottom Spreaders of welded frame: 16 gauge.
3. Shelves (including Base Shelf): 18 gauge.
4. Shelf End Brackets: 16 gauge.

C. All shelving shall be carefully adjusted to the floor and leveled. Wall shelving shall be attached to the walls at the most inconspicuous locations.

D. Shelving Types: As designated on drawings and in schedule.

1. Shelf dimensions are nominal.
2. All components, parts and accessories are to be provided for complete installation.

E. High Performance Laminate Self-Edged End Panels: Wilsonart Laminate #7953-38 Harvest Maple.

1. All components, parts and accessories are to be provided for complete installation.

F. Powder-coated steel shelving: Black.

G. High Performance Laminate Countertops: Formica Multifleck #253-58, Matte Finish.

PART 3 - EXECUTION

3.1 INSTALLATION

A. Installation in accordance with manufacturer's instructions.

3.2 ADJUSTING

A. Adjust all hardware for smooth operation.

3.3 CLEANING

A. Clean all surfaces of soil and remove all packaging materials and construction debris.

3.4 MEDIA CENTER SHELVING SCHEDULE

A. Montel Aetnastak Welded Frame Cantilever Shelving with HPL End panels and Counter tops. End panels are 3/4” thick, self-edged, laminated two sides, particle board core. Counter tops are 1-1/8” thick with self-edge, laminated on all sides, particle board core.

SH-1
Double faced closed base, 42"h x 36"w x 24"d with 4 - 12"d adj. divider type shelves and 2 divider type base shelves, self-edged HPL end panels, where required, and HPL counter tops. HPL all sides of end panels and countertops. Provide 2 - 9” high dividers per shelf.

SH-2
Double faced closed base, 42"h x 36"w x 24"d with 4 – 12”d hinged periodical shelves and 2 hinged periodical bases, self-edged HPL end panels, where required, and HPL counter tops. HPL all sides of end panels and countertops.

SH-3
Single faced closed base, 78"h x 36"w x 12"d with 4 - 12"d adj. divider type shelves and divider type base shelf, self-edged HPL end panels and metal canopy top. HPL all sides of end panels. Provide 2 - 9” high dividers per shelf.

SH-4
Single faced
closed base, 78"h x 24"w x 12"d with 4 - 12"d adj. divider type shelves and divider type base shelf, self-edged HPL end panels and metal canopy top. HPL all sides of end panels. Provide 2 - 9” high dividers per shelf.

SH-5
Single faced 42"h x 36"w x 12"d closed base w/ base shelf and 2 - 12"d adj. flat shelves, self-edged HPL end panels and counter tops. HPL all sides of end panels and countertops. Provide 2 - 9” high dividers per shelf.

EP-1
Double faced to fit 42”h x 24”d base.

EP-2
Single faced to fit 78”h x 12”d base.

EP-3
Single faced to fit 42”h x 12”d base.

END OF SECTION 123280

SECTION 129300 - SITE FURNISHINGS

PART 1 - GENERAL

1.1 RELATED DOCUMENTS

A. Drawings and general provisions of the Contract, including General and Supplementary Conditions and Division 1 Specification Sections, apply to this Section.

1.2 SUMMARY

A. This Section includes the following:

1. Bicycle racks

B. Related Sections include the following:

1. Division 3 Section "Cast-in-Place Concrete" for installation of pipe sleeves cast and installation of anchor bolts cast in concrete footings.

C. Products furnished, but not installed under this Section, include pipe sleeves, anchor bolts, to be cast in concrete footings.

1.3 SUBMITTALS

A. Product Data: For each type of product indicated.

B. Samples for Initial Selection: For units with factory-applied color finishes.

C. Samples for Verification: For each type of exposed finish required, prepared on Samples of size indicated below.

Size: Not less than 6-inch long linear components and 4-inch square sheet components.

D. Product Schedule: For site furnishings. Use same designations indicated on Drawings.

E. Maintenance Data: For site furnishings to include in maintenance manuals.

1.4 QUALITY ASSURANCE

A. Source Limitations: Obtain each type of site furnishing(s) through one source from a single manufacturer.

PART 2 - PRODUCTS

2.1 MATERIALS

A. Anchors, Fasteners, Fittings, and Hardware: Manufacturer's standard, corrosion-resistant-coated or non-corrodible materials; tamperproof, vandal and theft resistant, concealed, recessed, and capped or plugged.

B. Non-shrink, Non-metallic Grout: Premixed, factory-packaged, non-staining, non-corrosive, non--gaseous grout complying with ASTM C 1107; recommended in writing by manufacturer, for exterior applications.

C. Erosion-Resistant Anchoring Cement: Factory-packaged, non-shrink, non-staining, hydraulic-controlled expansion cement formulation for mixing with potable water at Project site to create pourable anchoring,

patching, and grouting compound; resistant to erosion from water exposure without needing protection by a sealer or waterproof coating; recommended in writing by manufacturer, for exterior applications.

2.2 BICYCLE RACKS

A. Basis-of-Design Product: Subject to compliance with requirements, provide Huntco: BR Series Rack – 15 total as manufactured by Huntco Supply, LLC P.O. Box 10395 Portland, Oregon 97296, (p) 503.224.8700, www.huntco.com or a comparable product by one of the following:

1. American Bicycle Security Company
2. Canterbury International
3. Creative Pipe, Inc.
4. Keystone Ridge Designs, Inc.
5. Landscape Forms
6. Landscape Structures Inc.
7. Maglin Furniture Systems Ltd.
8. Miracle Recreation Equipment Co.; a division of PlayPower, Inc.
9. SportsPlay Equipment, Inc.

B. Color: Thermo Plastic -Black.

2.3 FABRICATION

A. Metal Components: Form to required shapes and sizes with true, consistent curves, lines, and angles. Separate metals from dissimilar materials to prevent electrolytic action.

B. Welded Connections: Weld connections continuously. Weld solid members with full-length, full-penetration welds and hollow members with full-circumference welds. At exposed connections, finish surfaces smooth and blended so no roughness or unevenness shows after finishing and welded surface matches contours of adjoining surfaces.

C. Pipes and Tubes: Form simple and compound curves by bending members in jigs to produce uniform curvature for each repetitive configuration required; maintain cylindrical cross section of member throughout entire bend without buckling, twisting, cracking, or otherwise deforming exposed surfaces of handrail and railing components.

D. Exposed Surfaces: Polished, sanded, or otherwise finished; all surfaces smooth, free of burrs, barbs, splinters, and sharpness; all edges and ends rolled, rounded, or capped.

E. Factory Assembly: Assemble components in the factory to greatest extent possible to minimize field assembly. Clearly mark units for assembly in the field.

2.4 FINISHES, GENERAL

A. Comply with NAAMM's "Metal Finishes Manual for Architectural and Metal Products" for recommendations for applying and designating finishes.

B. Appearance of Finished Work: Variations in appearance of abutting or adjacent pieces are acceptable if they are within one-half of the range of approved Samples. Noticeable variations in the same piece are not acceptable. Variations in appearance of other components are acceptable if they are within the range of approved Samples and are assembled or installed to minimize contrast.

2.5 STEEL AND GALVANIZED STEEL FINISHES

A. Thermo Plastic Coating: Manufacturer's standard, Thermo Plastic Coating finish complying with finish manufacturer's written instructions for surface preparation, including pretreatment, application, baking, and minimum dry film thickness.

PART 3 - EXECUTION

3.1 EXAMINATION

A. Examine areas and conditions, with Installer present, for compliance with requirements for correct and level finished grade, mounting surfaces, installation tolerances, and other conditions affecting performance.

1. Proceed with installation only after unsatisfactory conditions have been corrected.

3.2 INSTALLATION, GENERAL

A. Comply with manufacturer's written installation instructions unless more stringent requirements are indicated. Complete field assembly of site furnishings where required.

B. Unless otherwise indicated, install site furnishings after landscaping and paving have been completed.

C. Install site furnishings level, plumb, true, and securely anchored or positioned at locations indicated on Drawings.

D. Pipe Sleeves: Use steel pipe sleeves preset and anchored into concrete for installing posts. After posts have been inserted into sleeves, fill annular space between post and sleeve with nonshrink, nonmetallic grout or anchoring cement, mixed and placed to comply with anchoring material manufacturer's written instructions, with top smoothed and shaped to shed water.

3.3 CLEANING

A. After completing site furnishing installation, inspect components. Remove spots, dirt, and debris. Repair damaged finishes to match original finish or replace component.

END OF SECTION129300

SECTION 142400 - HYDRAULIC ELEVATORS

PART 1 - GENERAL

1.1 RELATED DOCUMENTS

A. Drawings and general provisions of the Contract, including General and Supplementary Conditions and Division 01 Specification Sections, apply to this Section.

1.2 SUMMARY

A. Section includes hydraulic passenger elevators.

B. Related Requirements:

1. Section 015000 "Temporary Facilities and Controls" for temporary use of elevators for construction purposes.
2. Section 042000 "Unit Masonry" for setting sleeves, inserts, and anchoring devices in masonry and for grouting elevator entrance frames installed in masonry walls.
3. Section 051200 "Structural Steel Framing" for the following:

    a. Attachment plates, angle brackets, and other preparation of structural steel for fastening guide-rail brackets.
    b. Hoist beams.
    c. Structural-steel shapes for sills that are part of steel frame.

4. Section 055000 "Metal Fabrications" for the following:

    a. Attachment plates and angle brackets for supporting guide-rail brackets.
    b. Divider beams.
    c. Structural-steel shapes for sills.
    d. Pit ladders.
5. Section 096519 "Resilient Tile Flooring" for elevator cab flooring.
6. Section 099123 "Interior Painting" for field painting of hoistway walls.
7. Section 221429 "Sump Pumps" for sump pumps, sumps, and sump covers in elevator pits.
8. Section 271500 "Communications Horizontal Cabling" for telephone service for elevators.
9. Section 283111 "Digital, Addressable Fire-Alarm System" for smoke detectors in elevator lobbies to initiate emergency recall operation and for connection to elevator controllers.

1.3 DEFINITIONS

A. Definitions in ASME A17.1/CSA B44 apply to work of this Section.

B. Defective Elevator Work: Operation or control system failures; performances below specified ratings; excessive wear; unusual deterioration or aging of materials or finishes; unsafe conditions; the need for excessive maintenance; abnormal noise or vibration; and similar unusual, unexpected, and unsatisfactory conditions.

1.4 ACTION SUBMITTALS

A. Product Data: Include capacities, sizes, performances, operations, safety features, finishes, and similar information. Include product data for car enclosures, hoistway entrances, and operation, control, and signal systems.

B. Shop Drawings:

1. Include plans, elevations, sections, and large-scale details indicating service at each landing, machine room layout, coordination with building structure, relationships with other construction, and locations of equipment.
2. Include large-scale layout of car-control station.
3. Indicate maximum dynamic and static loads imposed on building structure at points of support, and maximum and average power demands.

C. Samples for Initial Selection: For finishes involving color selection.

D. Samples for Verification: For exposed car, hoistway door and frame, and signal equipment finishes; 3-inch- (75-mm-) square Samples of sheet materials; and 4-inch (100-mm) lengths of running trim members.

1.5 INFORMATIONAL SUBMITTALS

A. Qualification Data: For Installer.

B. Seismic Qualification Certificates: For elevator equipment, accessories, and components, from manufacturer.

1. Basis for Certification: Indicate whether withstand certification is based on actual test of assembled components or on calculation.
2. Dimensioned Outline Drawings of Equipment Unit: Identify center of gravity and locate and describe mounting and anchorage provisions.
3. Detailed description of equipment anchorage devices on which the certification is based and their installation requirements.

C. Manufacturer Certificates: Signed by elevator manufacturer certifying that hoistway, pit, and machine room layout and dimensions, as shown on Drawings, and electrical service, as shown and specified, are adequate for elevator system being provided.

D. Sample Warranty: For special warranty.

1.6 CLOSEOUT SUBMITTALS

A. Operation and Maintenance Data: For elevators to include in emergency, operation, and maintenance manuals.

1. In addition to items specified in Section 017823 "Operation and Maintenance Data," include diagnostic and repair information available to manufacturer's and Installer's maintenance personnel.

B. Inspection and Acceptance Certificates and Operating Permits: As required by authorities having jurisdiction for normal, unrestricted elevator use.

C. Continuing Maintenance Proposal: Submit a continuing maintenance proposal from Installer to Owner, in the form of a standard one-year maintenance agreement, starting on date initial maintenance service is concluded. State services, obligations, conditions, and terms for agreement period and for future renewal options.

1.7 QUALITY ASSURANCE

A. Installer Qualifications: Elevator manufacturer or an authorized representative who is trained and approved by manufacturers.

1.8 DELIVERY, STORAGE, AND HANDLING

A. Deliver, store, and handle materials, components and equipment in manufacturer's protective packaging. Store materials, components, and equipment off of ground, under cover, and in a dry location.

1.9 COORDINATION

A. Coordinate installation of sleeves, block outs, elevator equipment with integral anchors, and other items that are embedded in concrete or masonry for elevator equipment. Furnish templates, sleeves, elevator equipment with integral anchors, and installation instructions and deliver to Project site in time for installation.

B. Coordinate locations and dimensions of other work relating to hydraulic elevators including pit ladders; sumps and floor drains in pits; entrance sills; electrical service; and electrical outlets, lights, and switches in hoistways, pits, and machine rooms.

1.10 WARRANTY

A. Manufacturer's Special Warranty: Manufacturer agrees to repair, restore, or replace elevator work that fails in materials or workmanship within specified warranty period.

1. Failures include, but are not limited to, operation or control system failure, including excessive malfunctions; performances below specified ratings; excessive wear; unusual deterioration or aging of materials or finishes; unsafe conditions; need for excessive maintenance; abnormal noise or vibration; and similar unusual, unexpected, and unsatisfactory conditions.
2. Warranty Period: One year from date of Substantial Completion. Warranty will coincide with a 12 month free maintenance service period.

PART 2 - PRODUCTS

2.1 MANUFACTURERS & INSTALLERS

A. Manufacturers: Subject to compliance with requirements, provide products by one of the following:
1. Controllers - Motion Control Engineering, Elevator Controls, Smart Rise, GAL or Virginia Controls or approved equal. No proprietary equipment will be allowed.
2. Pumping Unit - DEM (Delaware Elevator Manufacturing), MEI Minnesota Elevator or approved equal.
3. Fixtures – Innovation, GAL or Monitor or approved equal.
4. Door Equipment – GAL (No Substitutions)

B. Approved Installers:
1. Delaware Elevator, Inc. (Contact Keith Mitchell 410-749-3489 Ext. 170)
2. KONE Elevator
3. Shindler Elevator
4. Thyssen-Krupp Elevator
5. OTIS Elevator

2.2 PERFORMANCE REQUIREMENTS

A. Regulatory Requirements: Comply with ASME A17.1/CSA B44.

B. Accessibility Requirements: Comply with Section 407 in the U.S. Architectural & Transportation Barriers Compliance Board's ADA-ABA Accessibility Guidelines and with ICC A117.1.

C. Seismic Performance: Elevator system shall withstand the effects of earthquake motions determined according to ASCE/SEI 7 and shall comply with elevator safety requirements for seismic risk Zone 2 or greater in ASME A17.1/CSA B44.

1. The term "withstand" means "the system will remain in place without separation of any parts when subjected to the seismic forces specified."
2. Provide earthquake equipment required by ASME A17.1/CSA B44.
3. Provide seismic switch required by ASCE/SEI 7.
4. Project's Seismic Design Category: Zone 2A = 0.15g

2.3 ELEVATORS

A. Elevator System, General: Non-Proprietary standard elevator systems. Unless otherwise indicated, manufacturers' standard components shall be used, as included in standard elevator systems and as required for complete system.

B. Elevator Description:
1. Elevator Number(s): One.
2. Type: Holeless, beside-the-car, single-acting, dual cylinder.
3. Rated Load: 3500 lb.
4. Passenger Elevator (Stretcher Compliant)
5. Rated Speed: 100 fpm.
6. Operation System: Single automatic.
7. Auxiliary Operations:
   a. Standby power operation.
   b. Nuisance call cancel.
8. Security Features: Keyless Entry System
9. Car Enclosures:
   a. Inside Height: 94 inches to underside of ceiling.
   b. Front Walls (Return Panels): Satin stainless steel, No. 4 finish
   c. Car Fixtures: Satin stainless steel, No. 4 finish.
   d. Side and Rear Wall Panels: Plastic laminate.
   e. Reveals: Satin stainless steel, No. 4 finish.
   f. Door Faces (Interior): Satin stainless steel, No. 4 finish.
   g. Door Sills: Aluminum
   h. Ceiling: Satin stainless steel, No. 4 finish.

i. Handrail: 1/2 by 2 inches (13 by 50 mm) rectangular satin stainless steel, No. 4 finish, at rear of car.
j. Floor prepared to receive rubber flooring (specified in Section 096519 "Resilient Tile Flooring").

10. Hoistway Entrances:

a. Width: 42 inches (1067 mm).
b. Height: 84 inches (2134 mm).
c. Type: Single-speed side sliding.
d. Frames: Satin stainless steel, No. 4 finish.
e. Doors: Satin stainless steel, No. 4 finish.
f. Sills: Aluminum

11. Hall Fixtures: Satin stainless steel, No. 4 finish.
12. Additional Requirements:

a. Provide inspection certificate in each car, mounted under acrylic cover with frame made from satin stainless steel, No. 4 finish.
b. Provide hooks for protective pads and one complete set(s) of full-height protective pads.

2.4 SYSTEMS AND COMPONENTS

A. Pump Units: Positive-displacement type with a maximum of 10 percent variation between no load and full load and with minimum pulsations.

1. Pump shall be submersible type with submersible squirrel-cage induction motor, and shall be suspended inside oil tank from vibration isolation mounts or shall be tank-top-mounted type with fan-cooled, squirrel-cage induction motor, and shall be mounted on oil tank with vibration isolation mounts and enclosed in prime-painted steel enclosure lined with 1-inch- (25-mm-) thick, glass-fiber insulation board.
2. Motor shall have solid-state starting.
3. Motor shall have variable-voltage, variable-frequency control.

B. Hydraulic Silencers: System shall have hydraulic silencer containing pulsation-absorbing material in blowout-proof housing at pump unit.

C. Piping: Size, type, and weight of piping as recommended by elevator manufacturer, with flexible connectors to minimize sound and vibration transmissions from power unit.

1. Cylinder units shall be connected with dielectric couplings.
2. Casing for Underground Piping: Schedule 40 PVC pipe complying with ASTM D 1785, joined with PVC fittings complying with ASTM D 2466 and solvent cement complying with ASTM D 2564.

D. Hydraulic Fluid: Nontoxic, biodegradable fluid made from vegetable oil with antioxidant, anticorrosive, antifoaming, and metal-passivating additives and approved by elevator manufacturer for use with elevator equipment.

1. Product: Subject to compliance with requirements, provide "Hydro Safe" by Hydro Safe Oil Division, Inc.

E. Inserts: Furnish required concrete and masonry inserts and similar anchorage devices for installing guide rails, machinery, and other components of elevator work. Device installation is specified in another Section.

F. Car Frame and Platform: Manufacturer’s standard.

G. Guides: Roller guides; polymer-coated, nonlubricated sliding guides.

2.5 OPERATION SYSTEMS

A. General: Provide manufacturer's standard microprocessor operation system as required to provide type of operation indicated.

B. Auxiliary Operations: In addition to primary operation system features, provide the following operational features for elevators where indicated:

1. Single-Car Standby Power Operation: On activation of standby power, car is returned to a designated floor and parked with doors open. Car can be manually put in service on standby power, either for return operation or for regular operation, by switches in control panel located at fire command station. Manual operation causes automatic operation to cease.
2. Nuisance Call Cancel: When car calls exceed a preset number while car load is less than a predetermined weight, all car calls are canceled. Preset number of calls and predetermined weight can be adjusted.

C. Security Features: Provide the following security features, where indicated. Security features shall not affect emergency firefighters' service.

1. Card-Reader Operation: System uses card readers at hall push-button stations to authorize calls. Security system determines which landings and at what times calls require authorization by card reader. Provide required conductors in traveling cable and panel in machine room for interconnecting card readers, other security access system equipment, and elevator controllers.

a. Security access system equipment is to be from Essex Electronics and will be the responsibility of the elevator contractor.

2.6 DOOR REOPENING DEVICES

A. Infrared Array: Provide door reopening device with uniform array of 36 or more microprocessor-controlled, infrared light beams projecting across car entrance. Interruption of one or more light beams shall cause doors to stop and reopen.

B. Nudging Feature: After car doors are prevented from closing for predetermined adjustable time, through activating door reopening device, a loud buzzer shall sound and doors shall begin to close at reduced kinetic energy.

2.7 CAR ENCLOSURES

A. General: Provide enameled-steel car enclosures to receive removable wall panels, with access doors, power door operators, and ventilation.

1. Provide standard railings complying with ASME A17.1/CSA B44 on car tops where required by ASME A17.1/CSA B44.

B. Materials and Finishes: Manufacturer's standards, but not less than the following:

1. Subfloor: Exterior, underlayment grade plywood, not less than 5/8-inch (15.9-mm) nominal thickness.
2. Floor Finish: Specified in 096519
3. Stainless-Steel Wall Panels: Flush, hollow-metal construction; fabricated from stainless-steel sheet.
4. Plastic-Laminate Wall Panels: Plastic laminate adhesively applied to 1/2-inch (13-mm) fire-retardant-treated particleboard with manufacturer's standard protective edge trim. Panels have a flame-spread index of 25 or less, when tested according to ASTM E 84. Plastic-laminate color, texture, and pattern as selected by Architect from plastic-laminate manufacturer's full range.
5. Fabricate car with recesses and cutouts for signal equipment.
6. Stainless-Steel Doors: Flush, hollow-metal construction; fabricated from stainless-steel sheet.
7. Sight Guards: Provide sight guards on car doors.
8. Sills: Extruded metal, with grooved surface, 1/4 inch (6.4 mm) thick.
9. Metal Ceiling: Flush panels, with low-voltage downlights in the center of each panel. Align ceiling panel joints with joints between wall panels.
10. Handrails: Manufacturer's standard handrails, of shape, metal, and finish indicated.

2.8 HOISTWAY ENTRANCES

A. Hoistway Entrance Assemblies: Manufacturer's standard horizontal-sliding, door-and-frame hoistway entrances complete with track systems, hardware, sills, and accessories. Frame size and profile shall accommodate hoistway wall construction.

B. Fire-Rated Hoistway Entrance Assemblies: Door and frame assemblies shall comply with NFPA 80 and be listed and labeled by a testing and inspecting agency acceptable to authorities having jurisdiction based on testing at as close-to-neutral pressure as possible.

C. Materials and Fabrication: Manufacturer's standards, but not less than the following:
1. Stainless-Steel Frames: Formed from stainless-steel sheet.
2. Star of Life Symbol: Identify emergency elevators with star of life symbol, not less than 3 inches (76 mm) high, on both inside surfaces of hoistway door frames.
3. Stainless-Steel Doors: Flush, hollow-metal construction; fabricated from stainless-steel sheet.
4. Sight Guards: Provide sight guards on doors matching door edges.
5. Sills: Extruded metal, with grooved surface, 1/4 inch (6.4 mm) thick.
6. Nonshrink, Nonmetallic Grout: Factory-packaged, nonstaining, noncorrosive, nongaseous grout complying with ASTM C 1107/C 1107M.

2.9 SIGNAL EQUIPMENT

A. General: Provide hall-call and car-call buttons that light when activated and remain lit until call has been fulfilled. Fabricate lighted elements with LEDs.

B. Car-Control Stations: Provide manufacturer's standard recessed car-control stations. Mount in return panel adjacent to car door unless otherwise indicated.

1. Mark buttons and switches for required use or function. Use both tactile symbols and Braille.
2. Provide "No Smoking" sign matching car-control station, either integral with car-control station or mounted adjacent to it, with text and graphics as required by authorities having jurisdiction.

C. Emergency Communication System: Two-way voice communication system, with visible signal, which dials preprogrammed number of monitoring station and does not require handset use. System is contained in flush-mounted cabinet, with identification, instructions for use, and battery backup power supply.

D. Firefighters' Two-Way Telephone Communication Service: Provide telephone jack in each car and required conductors in traveling cable for firefighters' two-way telephone communication service specified in Section 283111 "Digital, Addressable Fire-Alarm System"

E. Car Position Indicator: Provide illuminated, digital-type car position indicator, located above car door or above car-control station. Also, provide audible signal to indicate to passengers that car is either stopping at or passing each of the floors served. Include travel direction arrows if not provided in car-control station.

F. Hall Push-Button Stations: Provide one hall push-button station at each landing.

1. Provideunits with flat faceplate for mounting with body of unit recessed in wall.
2. Equip units with buttons for calling elevator and for indicating applicable direction of travel.

G. Hall Lanterns: Units with illuminated arrows; but provide single arrow at terminal landings. Provide the following:

1. Manufacturer's standard wall-mounted units, for recessed mounting above entrance frames.

H. Hall Annunciator: With each hall lantern, provide audible signals indicating car arrival and direction of travel. Signals sound once for up and twice for down.

1. At manufacturer's option, audible signals may be placed on cars.

I. Hall Position Indicators: Provide illuminated, digital-display-type position indicators, located above hoistway entrance at ground floor. Provide units with flat faceplate for mounting and with body of unit recessed in wall.

1. Integrate ground-floor hall lanterns with hall position indicators.

J. Standby Power Elevator Selector Switches: Provide switches, as required by ASME A17.1/CSA B44, where indicated. Adjacent to switches, provide illuminated signal that indicates when normal power supply has failed.

K. Fire-Command-Center Annunciator Panel: Provide panel containing illuminated position indicators for each elevator, clearly labeled with elevator designation; include illuminated signal that indicates when elevator is operational and when it is at the designated emergency return level with doors open. Provide standby power elevator selector switch(es), as required by ASME A17.1/CSA B44, adjacent to position indicators. Provide illuminated signal that indicates when normal power supply has failed.

L. Emergency Pictorial Signs: Fabricate from materials matching hall push-button stations, with text and graphics as required by authorities having jurisdiction, indicating that in case of fire elevators are out of service and exits should be used instead. Provide one sign at each hall push-button station unless otherwise indicated.

2.10 FINISH MATERIALS

A. General: Provide the following materials for exposed parts of elevator car enclosures, car doors, hoistway entrance doors and frames, and signal equipment as indicated.

B. Cold-Rolled Steel Sheet: ASTM A 1008/A 1008M, commercial steel, Type B, exposed, matte finish.

C. Hot-Rolled Steel Sheet: ASTM A 1011/A 1011M, commercial steel, Type B, pickled.

D. Stainless-Steel Sheet: ASTM A 240/A 240M, Type 304.

E. Stainless-Steel Bars: ASTM A 276, Type 304.

F. Stainless-Steel Tubing: ASTM A 554, Grade MT 304.

G. Aluminum Extrusions: ASTM B 221 (ASTM B 221M), Alloy 6063.

H. Plastic Laminate: High-pressure type complying with NEMA LD 3, Type HGS for flat applications.

PART 3 - EXECUTION

3.1 EXAMINATION

A. Examine elevator areas, with Installer present, for compliance with requirements for installation tolerances and other conditions affecting performance of the Work. Verify critical dimensions and examine supporting structure and other conditions under which elevator work is to be installed.

B. Prepare written report, endorsed by Installer, listing conditions detrimental to performance of the Work.

C. Proceed with installation only after unsatisfactory conditions have been corrected.

3.2 INSTALLATION

A. Install cylinder plumb and accurately centered for elevator car position and travel. Anchor securely in place, supported at pit floor and braced at intervals as needed to maintain alignment. Anchor cylinder guides at spacing needed to maintain alignment and avoid overstressing guides.

B. Welded Construction: Provide welded connections for installing elevator work where bolted connections are not required for subsequent removal or for normal operation, adjustment, inspection, maintenance, and replacement of worn parts. Comply with AWS workmanship and welding operator qualification standards.

C. Sound Isolation: Mount rotating and vibrating equipment on vibration-isolating mounts to minimize vibration transmission to structure and structure-borne noise due to elevator system.

D. Install piping above the floor, where possible. Install underground piping in casing.

E. Lubricate operating parts of systems as recommended by manufacturers.

F. Alignment: Coordinate installation of hoistway entrances with installation of elevator guide rails for accurate alignment of entrances with car. Where possible, delay installation of sills and frames until car is operable in shaft. Reduce clearances to minimum, safe, workable dimension at each landing.

G. Leveling Tolerance: 1/4 inch (6 mm), up or down, regardless of load and travel direction.

H. Set sills flush with finished floor surface at landing. Fill space under sill solidly with nonshrink, nonmetallic grout.

I. Locate hall signal equipment for elevators as follows, unless otherwise indicated:

1. For groups of elevators, locate hall push-button stations between two elevators at center of group or at location most convenient for approaching passengers.
2. Place hall lanterns either above or beside each hoistway entrance.
3. Mount hall lanterns at a minimum of 72 inches (1829 mm) above finished floor.

3.3 FIELD QUALITY CONTROL

A. Acceptance Testing: On completion of elevator installation and before permitting elevator use (either temporary or permanent), perform acceptance tests as required and recommended by ASME A17.1/CSA B44 and by governing regulations and agencies.

B. Advise Owner, Architect, and authorities having jurisdiction in advance of dates and times that tests are to be performed on elevators.

3.4 PROTECTION

A. Temporary Use: NONE

3.5 DEMONSTRATION

A. Engage a factory-authorized service representative to train Owner's maintenance personnel to operate elevator(s).

B. Check operation of elevator with Owner's personnel present before date of Substantial Completion and again not more than one month before end of warranty period. Determine that operation systems and devices are functioning properly.

3.6 MAINTENANCE

A. Initial Maintenance Service: Beginning at Substantial Completion, maintenance service shall include 12 months' full maintenance by skilled employees of elevator Installer. Include monthly preventive maintenance, repair or replacement of worn or defective components, lubrication, cleaning, and adjusting as required for proper elevator operation. Parts and supplies shall be manufacturer's authorized replacement parts and supplies.

1. Perform maintenance during normal working hours.
2. Perform emergency callback service during normal working hours with response time of two hours or less.

END OF SECTION 142400