ADDENDUM NO. 2

TO

POLYTECH HIGH SCHOOL
RENOVATIONS AND ADDITIONS
BID PACKAGE 'B'

This addendum is hereby made part of the Project Manual and Drawings dated 9 November 2012.

The Project Manual and Drawings shall be supplemented or amended as specified herein.

This Addendum contains changes to the requirement of the Project Manual. Such changes shall be incorporated into the Contract Documents and shall apply to work with the same meaning and force as if they had been included in the original Documents. Whenever this Addendum modifies a portion of a paragraph of the Project Manual, the remainder of the paragraph affected shall remain in force. Added information is shown as **Bold,** deleted information is shown as ~~strikethrough~~**.**

This Addendum contains changes to the requirement of the Drawings. Such changes shall be incorporated into the Contract Documents and shall apply to work with the same meaning and force as if they had been included in the original Documents. Whenever this Addendum modifies a portion of any drawing, the remainder of the drawing affected shall remain in force. Added, deleted or revised information is shown as "clouded".

The conditions and terms of the basic Contract Documents shall govern work unless otherwise described in this Addendum. Whenever the conditions of work, and the quality or quantity of materials, or workmanship are not fully described in this Addendum, the conditions of work included in the basic Contract Documents for similar items of work shall apply to the work described in this Addendum.

If no similar items of work are included in the basic Contract Document, the best quality of material and workmanship shall apply and all work shall be subject to the written acceptance of the Architect.

THE BID OPENING DATE WAS CHANGED. ALL BIDS ARE DUE AT THE POLYTECH SCHOOL DISTRICT OFFICE, NO LATER THEN 2:00 PM ON WEDNESDAY, 12 DECEMBER 2012. DO NOT DELIVER YOUR PROPOSALS TO THE POLYTECH HIGH SCHOOL OFFICE.

BIDDERS ARE ADVISED THAT THE ONLY RELIABLE SOURCE OF DOCUMENTS FOR THIS SOLICITATION IS THE EDIS FTP SITE. BIDDERS THAT RELY ON INFORMATION PUBLISHED ON ANY OTHER WEBSITES DO SO AT THEIR OWN RISK.

Addendum No. 2 – Consists of the following:

I. Responses to Bidders' Questions

II. Revisions to Project Manual/Specifications:

Section 000110 Table of Contents
Section 000115 List of Drawings
Section 011100 Summary of Work
Section 012100 Allowances
Section 061053 Miscellaneous Rough Carpentry
Section 077200 Roof Accessories
Section 088100 Fire-Rated Glazing
Section 092900 Gypsum Board
Section 096519 Resilient Tile Flooring
Section 097623 Resinous Flooring
Section 098433 Acoustical Wall Units
Section 230400 Heating Generation Equipment
Section 230410 Heating Generation Auxiliary Equipment
Section 260721 Fire Alarm and Detection Systems

III. Revisions to Drawings

MB1.1	FIRST FLOOR HVAC PLAN
DMA1.3	RADIO/TV & MEDICAL DEMOLITION MECHANICAL
MA1.3	RADIO/TV & MEDICAL
PD1.1	PLUMBING PLAN AREA 'A'
PD2.1	PLUMBING ROOF PLAN
DEA1.3	RADIO/TV & MEDICAL DEMOLITION ELECTRICAL
E1.1	ELECTRICAL SCHEDULES
E1.4	SINGLE LINE DIAGRAM & LEGEND ELECTRICAL
E-300	SITE UTILITY PLAN ELECTRICAL
EA1.2	WEIGHT ROOM & LOCKERS ELECTRICAL
EA1.3	RADIO/TV & MEDICAL ELECTRICAL

I. RESPONSES TO BIDDERS' QUESTIONS

A copy of the responses to RFI's 9, 11, 18, 20, 28, 29, 31, 32, 33, 34, 36, 37, 38, 41, 42, 44, 47, 48, 49, 50, 51, 52, 54, 55 and 56 are attached hereto.

II. REVISIONS TO PROJECT MANUAL/SPECIFICATIONS

A. Section 000110 Table of Contents

1. ADD Section 096519 Resilient Tile Flooring to the list of specifications on page 000110-3 and annotate as Addendum No. 2, dated 5 December 2012.

B. Section 000115 List of Drawings

1. REVISE the Latest Revision Date for drawings DMA1.3, MA1.3, PD1.1, DEA1.3, E1.1, E1.4, E300, EA1.2, and EA1.3 to read 4 Dec 12.

C. Section 011100 Summary of Work

1. Contract B-2 Concrete
   a. ADD the following NEW item after item 2-31 on page 011100-19:

      "2-32 Provide portable generators for temporary power needed for the performance of work."

2. Contract B-3 Masonry

   a. ADD the following NEW items after item 3-25 on page 011100-22:

      "3-26 Grout solid the existing CMU jambs where new door frames are to be installed."

      "3-27 "Provide portable generators for temporary power needed for the performance of work."

3. Contract B-5 Carpentry and General Work.
   a. DELETE item 5-24 on page 011100-28 and INSERT revised item:

      "5-24 This Contractor shall include in the base bid a $27,000 allowance for signage."

   b. DELETE item 5-30 on page 011100-28 and INSERT revised item:

      "5-30 Install wall mounted gymnasium protection pads furnished by the owner. The Contractor will furnish all necessary Z-clips, anchors, accessories, etc. needed for a complete installation."

   c. ADD the following NEW item after item 5-46 on page 011100-32:

"5-47 Provide wire cages."

4. Contract B-6 Manufactured Casework
   a. DELETE item 6-4 on page 011100-33 and INSERT revised item:

      "6-4 Provide solid polymer countertops, wall caps, window stools and window sills."

5. Contract B-8 Curtain Wall, Glazing, Storefronts, & Skylights
   a. ADD the following NEW item after item 8-16 on page 011100-37:

      "8-17 Provide on-site field testing of window systems for air infiltration and water resistance per the specifications."

6. Contract B-9 Metal Framing and Drywall
   a. ADD the following NEW item after item 9-15 on page 011100-39:

      "9-16 Patch and repair the existing stucco and provide new stucco on the Environmental Sciences building Area 'C'."

7. Contract B-11 Paint and Wall Finishes
   a. ADD the following NEW items after item 11-17 on page 011100-43:

      "11-18 Paint the new and existing stucco on the Environmental Sciences building Area 'C'.

      11-19 Paint concrete floors."

8. Contract B-15 Carpet, VCT & Ceramic Tile
   a. ADD Section 096519 Resilient Tile Flooring to the list of specifications on page 000110-47 and annotate as Addendum No. 2, dated 5 December 2012.

   b. DELETE items 15-6, 15-7, 15-9, and 15-11 on page 011100-47 and INSERT revised items:

      "15-6 Provide interlocking rubber tile flooring."

      "15-7 Refinish the existing wood floor in the gymnasium in Area 'AG'. Remove and reinstall the existing collapsible bleachers in order to finish the floor all the way to the walls. Restripe the floor to match the existing striping."

      "15-9 Provide transition and reducer strips in the various materials and locations as scheduled on the drawings."

"15-11 Provide cleaning, waxing and protection. Protection will be with reinforced kraft paper, cardboard, or masonite."

c. ADD the following NEW items after item 15-15 on page 011100-48:

"15-16 Provide vinyl composition tile (Fritz) to match existing floor.

15-17 Provide skim coating of CMU in order to prepare the new or existing walls to receive ceramic tile."

9. Contract B-19 Mechanical and Plumbing
   a. ADD the following NEW items after item 19-44 on page 011100-56:

"19-45 This contractor will be responsible for the demolition, removal and replacement of the concrete slab associated with the removal of existing underground sanitary and storm sewer and with the installation of new sanitary and storm sewer in the existing areas."

"19-46 Provide downspout boots on rainwater conductors where indicated."

10. Contract B-21 Electrical, Fire Alarm & Special Systems.
   a. ADD the following sentences to the end of item 21-2 on page 011100-59:

"Contract A-1 Sitework is responsible for providing the 2 yard lights at the pump stations."

b. ADD the following sentences to the end of item 21-7 on page 011100-60:

"The Electrical Contractor will connect to the permanent transformer set by the utility company for temporary power and lighting for Area 'D'. The temporary power and lighting for Area 'B' will come through the new service panels which are served by the panels in the existing electric/boiler room. This contractor will provide a temporary generator for temporary power and lighting for Area 'B' until such time the temporary service can be connected to the existing service."

c. DELETE item 21-14 on page 011100-60 and INSERT revised item:

"21-14 Provide conductors from the utility pole on Walnut Shade Road to transformer. Permanent transformer will be furnished and installed by the utility company. The connections on primary side at utility pole and transformer will be by the utility company. The Electrical Contractor will provide the connections on the secondary side of the transformer. The Sitework Contractor will be providing 2 PVC conduits, with pull cords, from the utility pole to the transformer."

d. DELETE bullet 21-22 on page 011100-61. An electric meter will be furnished by the utility company at the main transformer.

D. Section 012100 Allowances

1. ADD the following item to Contract B-5 Carpentry and General Work:
   "5. $27,000 for signage."

2. ADD the following item to Contract B-21 Electrical, Fire Alarm & Special Systems:
   "2. Provide 25 additional peripheral fire alarm devices."

E. Section 061053 Miscellaneous Rough Carpentry – REVISE this section as follows and annotate as Addendum No.2, dated 5 December 2012. The section was revised as follows:

1. Page 061053-1, Paragraph 1.1.A; Added:

   "8. Wire mesh partitions."

2. Page 061053-4, Paragraph 2.10; Added in entirety:

   "2.10 WIRE MESH
   A. General: The wire mesh to be vinyl-coated, welded steel wire, min. 16 gauge.
   B. Max. wire spacing 2"x2".
   C. Edges shall be twisted or bonded to a continuous strand, for safe handling and secure fastening.
   D. Mount wire on secured side of new partitions. Staple wire securely to wood stud framing at 8" o.c. max."

F. Section 077200 Roof Accessories

1. ADD approved manufacturer after paragraph 2.6.1a on page 077200-9

   "b. Nystrom"

G. **Section 088100 Fire-Rated Glazing -** DELETE this section in its entirety and INSERT revised Section 088100, annotated Addendum No.2, dated 5 December 2012.

H. **Section 092900 Gypsum Board -** DELETE this section in its entirety and INSERT revised Section 088100, annotated Addendum No.2, dated 5 December 2012.

I. **Section 096519 Resilient Tile Flooring –** INSERT new section 096519, pages 096519-1 through 096519-4, annotated Addendum No.2, dated 5 December 2012.

J. Section 097623 Resinous Flooring

1. ADD approved manufacturer after paragraph 2.1.A.2 on page 096723-6

"3. Dur-A-Flex"

K. Section 098433 Acoustical Wall Units

1. ADD approved manufacturer after paragraph 2.1.A on page 098433-3

   "B. Leading Acoustics"

L. Section 230400 Heating Generation Equipment - REVISE this section as follows and annotate as Addendum No.2, dated 5 December 2012. The section was revised as follows:

1. Page 230400-6, Paragraph 2.2.F: Add Raypak XTherm to the list of acceptable makes.

M. Section 230410 – Heating Generation Auxiliary Equipment REVISE this section as follows and annotate as Addendum No.2, dated 5 December 2012. The section was revised as follows:

1. Page 230410-2: CLARIFICATION: The vent for each boiler shall be as described in Paragraph 2.1 even if the boiler manufacturer allows the use of other materials for their particular boiler.

N. **Section 260721 Fire Alarm and Detection Systems -** DELETE this section in its entirety and INSERT revised Section 260721, annotated Addendum No. 2. The section was revised as follows:

1. Page 260721-1, Paragraph 1.1.A: Revised to read as:

   "A. This specification document provides the requirements for the installation, programming and configuration of a complete networked digital protocol analog addressable fire alarm system with distributed voice evacuation or approved equal. This system shall include, but not be limited to, system cabinet, power supply, built in Signaling Line Circuit (SLC), 4 line display 40 character each LCD annunciator, eight programmable Flexputs, built in dual line digital communicator associated peripheral devices, batteries, wiring, conduit and other relevant components and accessories required to furnish a complete and operational Life Safety System. The system shall have the interconnection capability for up to 16 panels. The specified panels' firmware must be enabled to support 16 panels and is to be provided by a Silent Knight "Select" certified Dealer. The networked system has two modes of operation, multiple panels covering one larger building, or multiple independent buildings."

2. Page 260721-8, Paragraph 3.0.A.5: Revised to read as:

   "5. The FACP must have Day/Night sensitivity capabilities on detectors and be capable of supporting up to 636 analog addressable points. (SLC) capable of supporting a

minimum of 159 detectors and 159 module devices each. The FACP network must support up to sixteen FACP's on the network providing a maximum addressable point capacity of 10,176 points (636 x 8 = 10,176). The FACPs' firmware must be enabled to support 16 panels The system components must be provided and programmed by a Silent Knight "Select" certified dealer."

3. Page 260721-19, Paragraph 8.1: Inserted the following:

"B. Spare Equipment

1. The Electrical Contractor shall furnish up to five (5) in any combination of fire alarm devices selected by the Owner, including but not limited to smoke, heat, duct, monitor module, control monitor module, or audio/visual devices for Owner spare.

C. In addition to the equipment shown on the project drawings, include twenty-five (25) additional peripheral devices of any type (i.e. smoke detector, duct smoke detector, heat detector, pull station. Monitor module, relay module, control module, horn/strobe, speaker/strobe, strobe, etc.).

These devices may be installed at the discretion of the local Fire Marshal, the project engineer, or the licensed fire alarm company, upon review and/or testing performed by all.

If necessary, these devices, along with the required panel additions, wiring, labor, etc., shall be furnished and installed at no additional cost to the owner. If, at the end of the project, they are not required to be installed, they shall be given to the owner for their use.

D. Concurrent with the warranty period, the licensed fire alarm contractor shall provide (2) semi-annual inspections of the completed fire alarm system in accordance with the State of Delaware Fire Prevention Regulations. All costs shall be included in the contract amount. No additional fees will be paid by the owner for this service."

III. <u>REVISIONS TO DRAWINGS</u>

A. MB1.1 FIRST FLOOR HVAC PLAN - Clarification on duct insulation. Drawing Notes 5, 6, and 9 describe the requirements for acoustic lining in ductwork. Section 230230, page 4, article 2.3 describes duct liner as 1"thick material, and on page 6, article 3.1.K requires this ductwork to have one inch thick fiberglass external insulation as well. The external duct insulation shall meet the requirements of article 2.2.B on page 3.

B. DMA1.3 RADIO/TV & MEDICAL DEMOLITION MECHANICAL - DELETE this drawing in its entirety and INSERT revised drawing DMA1.3, annotated Addendum No.2, dated 4 December 2012. The drawing was revised as follows:

1. Revise area designation in Key Plan and Plan identifier.

C. **MA1.3 RADIO/TV & MEDICAL MECHANICAL** – DELETE this drawing in its entirety and INSERT revised drawing MA1.3, annotated Addendum No.2, dated 4 December 2012. The drawing was revised as follows:

1. Revise area designation in Key Plan and Plan identifier.

D. **PD1.1 PLUMBING PLAN AREA 'A' -** DELETE this drawing in its entirety and INSERT revised drawing PD1.1, annotated Addendum No.2, dated 4 December 2012. The drawing was revised as follows:

1. Revise notes for Boilers #1 & #2.

E. **PD2.1 PLUMBING ROOF PLAN -** Refer to the natural gas riser diagram on Drawing P1.1 for work affecting the gas service into the boiler room.

F. **DEA1.3 RADIO/TV & MEDICAL DEMOLITION ELECTRICAL** - DELETE this drawing in its entirety and INSERT revised drawing DEA1.3, annotated Addendum No.2, dated 4 December 2012. The drawing was revised as follows:

1. Revise area designation in Key Plan and Plan identifier.

G. **E1.1 SCHEDULES ELECTRICAL -** DELETE this drawing in its entirety and INSERT revised drawing E1.1, annotated Addendum No.2, dated 4 December 2012. The drawing was revised as follows:

1. Add pole model number to Type "T" lighting fixture.

H. **E1.4 SINGLE LINE DIAGRAM & LEGEND ELECTRICAL -** DELETE this drawing in its entirety and INSERT revised drawing E1.4, annotated Addendum No.2, dated 4 December 2012. The drawing was revised as follows:

1. Revise the Single Line Diagrams electric service notes and panel schedule for EM-AUD.

I. **E300 SITE UTILITY PLAN ELECTRICAL -** DELETE this drawing in its entirety and INSERT revised drawing E300, annotated Addendum No.2, dated 4 December 2012. The drawing was revised as follows:

1. Items were added after Bid Pack "A" was issued. Type "U" fixtures, Revised type "S" fixtures to type "S1", Revised service conduits notes.
2. Add generator, main distribution switchboard, and transfer switch in approximate location of Existing Boiler Room.

3. Add Pole Base Detail for Parking area.

J. EA1.2 WEIGHT ROOM & LOCKERS ELECTRICAL - DELETE this drawing in its entirety and INSERT revised drawing EA1.2, annotated Addendum No.2, dated 4 December 2012. The drawing was revised as follows:

1. Revise fixture labeled "A" to "F" and Add "F" identifier to unidentified fixture in Women's Locker Room.

K. EA1.3 RADIO/TV & MEDICAL ELECTRICAL - DELETE this drawing in its entirety and INSERT revised drawing EA1.3, annotated Addendum No.2, dated 4 December 2012. The drawing was revised as follows:

1. Revise area designation in Key Plan and Plan identifier.

END OF ADDENDUM NO. 2

REQUEST FOR INFORMATION

TO: MARTIN DUSBIBER, DALLC RFI#: 9

FROM: CHRISTIAN J. MCCONE DATE: 26 NOV 12

PROJECT: POLYTECH HIGHSCHOOL RENOVATIONS & ADDITIONS – BID PACK 'B'

DWG. # / DETAIL: _____ SPEC. SECTIONS: 260721 PAGE: _____

REQUEST:

Our company would like to be added to the approved fire alarm vendor list, Section 260721, paragraph 2.1.B. We have extensive experience with Silent Knight and will have no problem getting a proposal together for Polytech renovations. We service Seaford School district and Laurel School district at this time. We are involved with the Seaford High addition and also was low bid on structural cable portion on Laurel Middle & High School recent bid. Please let me know if there any way ARK Systems can be added to vendor list. See attached.

Submitted By: Howard Sinclair, ARK Systems Date: 20 NOV 12

RESPONSE:

"Specifications Indicate" the system shall have interconnection capability for up to 16 panels. The Vendor must meet select dealer level. If ARK Systems can provide documentation of "select dealer" we can approve and add to Vendor list.

Response By: William J Slusser
Furlow Associates, Inc Date: 11/28/12

REQUEST FOR INFORMATION

TO: MARTIN DUSBIBER, DALLC RFI#: 11

FROM: CHRISTIAN J. MCCONE DATE: 26 NOV 12

PROJECT: POLYTECH HIGHSCHOOL RENOVATIONS & ADDITIONS – BID PACK 'B'

DWG. # / DETAIL: _____ SPEC. SECTIONS: 260721 PAGE: _____

REQUEST:

Our company would like to be added to the approved fire alarm vendor list, Section 260721, paragraph 2.1.B. I noticed in the fire alarm portion of the specifications two specific vendors were noted. Anaconda Protective Concepts was not one of those. Anaconda has been providing service to Polytech for some time now. Also, we are a Silent Knight vendor, and specifically certified on the SK Farenhyt IFP-2000 VIP panel that was specified.

Submitted By: Paul Flannigan, Anaconda Protective Concepts Date: 21 NOV 12

RESPONSE:

"Specifications Indicate" the system shall have interconnection capability for up to 16 panels. The Vendor must meet select dealer level. If Anaconda can provide documentation of "select dealer" we can approve and add to Vendor list.

Response By: William J Slusser
Furlow Associates, Inc Date: 11/28/12

REQUEST FOR INFORMATION

TO: MARTIN DUSBIBER, DALLC RFI#: 18

FROM: CHRISTIAN J. MCCONE DATE: 27 NOV 12

PROJECT: POLYTECH HIGHSCHOOL RENOVATIONS & ADDITIONS – BID PACK 'B'

DWG. # / DETAIL: _____ SPEC. SECTIONS: 088100 PAGE: _____

REQUEST:

Regarding the response to question # 6 in RFI#8, see details 28, 29 and 30 on AD6.6 which note "TGP Heat Barrier Series" for the framing and 120 minute fire rated glazing "Pilkington Pyrostop" for the glass. I am familiar with that assembly but do not see a specification for it.

Submitted By: Alan Wood, Charles Brown Glass Co. Inc. Date: 26 NOV 12

RESPONSE:

This was answered in a previous RFI. Specification Section 088100 Fire-Rated Glazing will be revised in Addendum No. 2.

Response By: Martin Dusbiber & Chris McCone Date: 11/29/2012 & 12/5/12

REQUEST FOR INFORMATION

TO: MARTIN DUSBIBER, DALLC RFI#: 20

FROM: CHRISTIAN J. MCCONE DATE: 27 NOV 12

PROJECT: POLYTECH HIGHSCHOOL RENOVATIONS & ADDITIONS – BID PACK 'B'

DWG. # / DETAIL: _____ SPEC. SECTIONS: _____ PAGE: _____

REQUEST:

1. There are references for new stucco, recoating of stucco, and stucco repair on sheets AC2.1 and details 2 & 3/AC5.3. Who would be responsible for this? Are there any specification for this work?
2. On sheet AA1.3.1 there appears to be soffits at the acoustical ceiling direction change or entrances into different rooms but they are not noted as new gypsum board. Are these existing?
3. Can we please get some additional information or clarity on what the architect is looking for on the suspended gypsum board clouds in the auditorium as shown on sheets AD1.11 & AD4.8 including details, hanging/support details, proposed radius degree information, etc. Is this to be a system or a packaged product from a manufacturer? If so, please specify. As it stands now we have some illustrations on what is should look like when done but more information is needed.

Submitted By: Ken Coldiron, Brandywine Contractors Inc Date: 26 NOV 12

RESPONSE:

1. This work will be assigned to contract B9 Metal Framing and Drywall. A separate specification for stucco repairs will not be issued. Additional wording has been added to specification section 024119 Selective Demolition. See Addendum No. 2
2. These two, 36" long, bulkheads are new and should be labeled D2. They are there solely to allow the ceiling to change direction.
3. Suspended gypsum board clouds in the auditorium are to be ½" G.W.B. ceiling clouds on suspended convex metal furring system – Provide 6" high G.W.B. edges all sides. Refer to sketch indicating cloud dimensions for pricing purposes.

Response By: Harry Pettoni/Chris McCone Date: 11/28/12 & 12/5/12

REQUEST FOR INFORMATION

TO: MARTIN DUSBIBER, DALLC RFI#: 28

FROM: CHRISTIAN J. MCCONE DATE: 28 NOV 12

PROJECT: POLYTECH HIGHSCHOOL RENOVATIONS & ADDITIONS – BID PACK 'B'

DWG. # / DETAIL: SD2.1 SPEC. SECTIONS: PAGE:

REQUEST:

Detail 9/SD2.1 - Please indicate distance between dowels and/or length unless note should read "#5 @ 16" o.c dowel 6" into existing footing with epoxy adhesive" (similar to detail 4/SD2.1).

Submitted By: Lynn Madden, Kent Construction, Inc. Date: 27 NOV 12

RESPONSE:
Note should read "12" long #5 @ 16" o.c. Dowel 6" into existing footing with epoxy adhesive. Dowel in detail 4/SD2.1 should be 12" long also.

Response By: Cherie Moore Date: 11-29-12

REQUEST FOR INFORMATION

TO: MARTIN DUSBIBER, DALLC RFI#: 29

FROM: CHRISTIAN J. MCCONE DATE: 28 NOV 12

PROJECT: POLYTECH HIGHSCHOOL RENOVATIONS & ADDITIONS – BID PACK 'B'

DWG. # / DETAIL: AB1.7 SPEC. SECTIONS: 275115 PAGE:

REQUEST:

On the above mentioned plan you will find a symbol for a pa speaker (AV1) that is to be provided/installed by the contractor. However, there is no mention of what type of speaker is to be provided in the specifications and how it would tie into the existing pa/intercom system. Please confirm. Thank you.

Submitted By: Luis Colon, Baltimore Sound Engineering Date: 27 NOV 12

RESPONSE:
This speaker is part of the PA system and is NIC

Response By: Martin Dusbiber Date: 11/29/2012

REQUEST FOR INFORMATION

TO: MARTIN DUSBIBER, DALLC RFI#: 31

FROM: CHRISTIAN J. MCCONE DATE: 29 NOV 12

PROJECT: POLYTECH HIGHSCHOOL RENOVATIONS & ADDITIONS – BID PACK 'B'

DWG. # / DETAIL: _____ SPEC. SECTIONS: 096723 PAGE: _____

REQUEST:

We would like to add Dur-A-Flex flooring systems under Section 096723-Resinous Flooring. These systems are equal to or better than the Basis of Design. Should you require anything further please let me know. See attached information.

Submitted By: Chuck Harrison, C.C.S.,Inc. Date: 27 NOV 12

RESPONSE:
Dur-A-Flex is an approved substitution as long as the product proposed meets the intent of the drawings and specifications for each type of floor system.

Response By: Martin Dusbiber Date: 11/29/2012

REQUEST FOR INFORMATION

TO: MARTIN DUSBIBER, DALLC RFI#: 32

FROM: CHRISTIAN J. MCCONE DATE: 29 NOV 12

PROJECT: POLYTECH HIGHSCHOOL RENOVATIONS & ADDITIONS – BID PACK 'B'

DWG. # / DETAIL: _____ SPEC. SECTIONS: _____ PAGE: _____

REQUEST:

1. I cannot find the following: TX-5,existing annunciator, generator/ATS spec,
2. Will a location be provided for the generator and incoming generator feed and wireway assembly?
3. I cannot seem to find the transfer switches, or the emergency relay panels on the drawings.
4. Scope of work calls out for "clock and guards", I did not see a symbol for clocks and cannot find the spec.
5. Scope of work 21-34 calls for commissioning of a security system. Please confirm this work is not part of contract B-21.
6. Panel schedule For EM-AUD does not indicate a 3P breaker to feed TX-5 primary disconnect.
7. Is there an 800a disconnect on the secondary side of TX-7?
8. On the one line, a 100a primary disconnect is shown for TX-9. TX-9 is shown in the boiler room, the breaker feeding TX-9 should suffice as a primary disconnecting means for the transformer. Should there be a 200a secondary disconnect in the storage room with the tv dimmer rack?

Submitted By: Gary Wolf, Current Solutions, Inc. Date: 28 NOV 12

RESPONSE:

1. Refer to Addendum #2, Drawing EPD1.2, Stage B832. Refer to Addendum #3, Drawing E300.
2. Yes, Refer to Addendum #3, Drawing E300.
3. Yes, Refer to Addendum #3, Drawing E300.
4. Refer to Architectural Drawings & Specifications.
5. The security system is being provided by others. Item 21-34 will be deleted.
6. Refer to Addendum #2, Drawing E1.4.
7. Refer to Addendum #1, Drawing E1.4.
8. Refer to Addendum #1, Drawing E1.4.

Response By: William J. Slusser
Furlow Associates, Inc. Date: 12-4-12

REQUEST FOR INFORMATION

TO: MARTIN DUSBIBER, DALLC RFI#: 33

FROM: CHRISTIAN J. MCCONE DATE: 29 NOV 12

PROJECT: POLYTECH HIGHSCHOOL RENOVATIONS & ADDITIONS – BID PACK 'B'

DWG. # / DETAIL: _____ SPEC. SECTIONS: 075419 PAGE: _____

REQUEST:

1) Summary states adhered assembly, section 3.6 states Mechanically Attached, which one?
2) Vapor Retarder section 2.5. Is this required on all roof areas or just where the tear off occurs? Temp. roof?
3) Section 3.5 mentions a coverboard, I didn't see a specific spec for this item nor on drawings?
4) Section 3.9, Field Quality mentions an EFVM? Engage qualified testing agency to inspect and furnish reports to Architect. Could furnish more information? Flood test? Are these items required? I have a concern about the weight of the water on the flood test.
5) I've heard the tear off of the existing roof area on the Environment Building is by Demo contract and the alternate on existing gym is by roofing contractor (Thinking of gym floor), is this true?
6) Drawing SA-1.2 Roof Framing Plan. Is this drawing for mech. renovations, with RTU-A2 being in the base bid?
7) Roof area B, drawing AB-1.2 states 3" rigid roof insulation. Area D does'nt mention a thickness, but specification 075419-8, under 2.6, item 2a states an LTTR of 28 which is two layers of 2.3" roof insulation. Please clarify.
8) Spec 075419-8, 2.2D "Protection Mat - What part of the assembly is this installed? It's listed in roofing scope as well.
9) Where mech. demo occurs in existing roof areas, does the deck infill by another contract? Misc Metals?

Submitted By: Leonard, Quality Exteriors Date: 27 NOV 12

RESPONSE:

1. Coverboards may be mechanically fastened or adhered per the Manufacturer's instructions. All other roofing and insulation layers should be fully adhered.
2. A vapor barrier is only to be used for new roofed areas, and should go directly over the deck.
3. Coverboards should be ½" high density polyisocyanurate (min. density of 4 lb./c.f., and compressive strength of 100 psi), similar to "SecureShield HD+" by Carlisle. They are to be placed directly over the existing insulation, as a base for the new roofing.
4. The field survey is revised to infra-red for this application. Specifications do call for flood testing.

5. See Addendum No. 1.
6. Yes, installation of RTU-A2 and related work is in the Base Bid.
7. The Specifications govern. LTTR 28 (U=0.0357) is required.
8. Protection Mat is no longer required. It is only for mechanically fastened or ballasted systems.
9. Para. 7-15 of the Roofing Contract (page 011100-35) calls for "permanent patching of existing roof systems at areas of demolition" by the Roofing Contractor.

Response By: Martin Dusbiber Date: 12/04/2012

REQUEST FOR INFORMATION

TO: MARTIN DUSBIBER, DALLC RFI#: 34

FROM: CHRISTIAN J. MCCONE DATE: 29 NOV 12

PROJECT: POLYTECH HIGHSCHOOL RENOVATIONS & ADDITIONS – BID PACK 'B'

DWG. # / DETAIL: _____ SPEC. SECTIONS: VARIOUS PAGE: _____

REQUEST:

I have following questions regarding the above referenced sections of work on this project:

General Gymnasium Equipment Questions

1. Drawing AA1.5.2. FFE schedule item #1 calls for (2) scoreboards furnished by owner and installed by contractor. Are the scoreboards not a part of this bid?
   Just the installation indicated on the plans
2. Drawing AB1.5.1. FFE schedule item #2 calls for (1) wireless scoreboard furnished by owner and installed by contractor. Are the scoreboards not a part of this bid?
   Just the installation indicated on the plans
3. Drawing AB1.5.1. FFE schedule item #6 & 7 (volleyball anchors and volleyball nets, respectively) call for the (6) volleyball anchors and (2) volleyball systems to be furnished by owner and installed by contractor. Are the anchors and nets (specifically the anchors) not a part of this bid?
   Just the installations indicated on the plans

Section 114860 – Gymnasium Protection Accessories

1. Will Performance Sports Systems be approved as equal for this section of work? Attached is product information showing it is equal to the specified product.
   This company is an approved equal for items scheduled to be supplied by contractor as long as the products meet the intent of the drawings and specification requirements.
2. Drawing AA1.5.1 FFE schedule item #11 calls for wall mats but states owner provided contractor installed. Are the wall pads provided by the contractor or owner?
   Just the installations indicated on the plans
3. Are any wall pads required in the existing Gym (#320) or Multi-Purpose Room (#1030)?
   No, please see the contract drawings

Section 116623 – Gymnasium Equipment

1. Paragraph 2.2.C.2 specifies height adjuster for the basketball backstops. Is this to be manual or electric?
   Electric
2. Paragraph 2.2.F. specifies the basketball backboards but no edge padding around the lower perimeter of the backboard. Are bolt-on safety edge pads required on the lower portion of the backboards?
   Edge Padding is to be included
3. Paragraph 2.2.H.2. specifies a fixed non-movable goal. With height adjusters allowing a goal height of 8'-0", it is highly recommended that these goals be break-away style. Are break-away goals required in lieu of fixed, non-moveable?
   Goals are to meet NCAA 5F requirements regarding safety

Section 126100 – Fixed Audience Seating

1. Paragraph 2.1.B.3.f. specifies four different styles of end panels. Which is required?
   Owner shall select from the range of options indicated.
2. Paragraph 2.2.N.2.d. specifies four different styles of outer back panels. Which is required?
   Owner shall select from the range of options indicated.
3. Paragraph 2.2.N.2.e. specifies two different styles of back foams. Which is required?
   Owner shall select from the range of options indicated.
4. Paragraph 2.2.N.2.f. specifies six different styles of back cover tailoring options. Which is required?
   Owner shall select from the range of options indicated.

Section 126600 – Telescoping Gymnasium Seating

1. Paragraph 2.3.A. specifies a bleacher length of 87′-6″ long, however drawing AA1.5.1. shows a bleacher length that is 79′-0″ long. Which length is to be provided?
   Bleacher length is to be as indicated on the drawings
2. Paragraph 2.3.B.3. specifies row spacing of 33″, however drawing AB3.2 shows row spacing of only 26″. Which is required 33″ or 26″ row spacing?
   There is no indicated row spacing on drawing AB3.2 Row spacing is to be as specified.

Submitted By: Jason Dinan, TJ Distributors Date: 28 NOV 12

RESPONSE:
See Above

Response By: Martin Dusbiber Date: 11/30/2012

REQUEST FOR INFORMATION

TO: MARTIN DUSBIBER, DALLC RFI#: 36

FROM: CHRISTIAN J. MCCONE DATE: 30 NOV 12

PROJECT: POLYTECH HIGH SCHOOL RENOVATIONS & ADDITIONS – BID PACK 'B'

DWG. # / DETAIL: _____ SPEC. SECTIONS: _____ PAGE: _____

REQUEST:
Can you please answer the following questions for Polytech Bid Pack B.

1. The drawings refer to an existing generator however our scope item 21-26 states we are to provide the generator. If we are to provide the generator can you provide specs for the generator and ATS?
2. Scope item 21-14 states to provide all primary work. Are we to include all primary wiring and terminations in our base bid?
3. The light fixture schedule on E302 states that fixture type "S" is a new fixture and that "S1" is an existing to be installed on a new pole base however the fixture schedule on E1.1 states the fixture type "S" is an existing fixture to be install on a new pole base and "S1" is a new fixture. Which fixture schedule is correct?
4. On drawing E1.2 the mechanical schedule some safety switches are listed as provide by the EC. Are all other safety switches being provided by others or do I need to account for them also?
5. Does the "T" fixture need a pole base and if so can you provide a detail for the base?

Submitted By: Scott Frieze, Nickle Electric Date: 28 NOV 12

RESPONSE:

1. The scope item will be revised in Addendum No. 2
2. CLARIFICATION: Bid Pack 'A' Contractor will install primary conduits from pole to transformer location. Bid Pack 'B' Contractor will provide and install conductors from pole to transformer. Connections on primary side at pole and transformer will be by Utility Company.
3. Refer to Addendum #1.
4. Equipment with:
   - "PROVIDE LOCKABLE FUSED DISCONNECT SWITCH" will be provided by Electrical Contractor.
   - "PROVIDE COMBINATION STARTER DISCONNECT SWITCH" will be provided by Electrical Contractor.
   - "FURNISHED WITH UNIT" disconnect will be provided by manufacturer.
5. Refer to Addendum #2, Drawing E1.1.

Response By: William J Slusser, Furlow Associates, Inc. Date: 12/4/12

REQUEST FOR INFORMATION

TO: MARTIN DUSBIBER, DALLC RFI#: 37

FROM: CHRISTIAN J. MCCONE DATE: 30 NOV 12

PROJECT: POLYTECH HIGH SCHOOL RENOVATIONS & ADDITIONS – BID PACK 'B'

DWG. # / DETAIL: _____ SPEC. SECTIONS: _____ PAGE: _____

REQUEST:

1. Specification section 061053-1, 1.3, specifies FSC certification on the rough lumber. It is the only reference I can find that indicate that this is a green project. Is this fsc certification correct? It adds significantly to the cost.
2. Specification section 114860, gym protection accessories. The only wall mounted pads I see are in the auxiliary gym (309). These pads are provided by the owner. Should there be any in the multi-purpose room?
3. Contract B-5 includes signage. There is none shown in the documents.
4. Contract B-5 includes demolition. Will mechanical and electrical contractors disconnect and lower equipment to the floor.
5. Who is responsible for the wire cage in mp storage?

Submitted By: Pete Kramer, J.S. Kramer Date: 29 NOV 12

RESPONSE:

1. FSC certification is not required as this is not a LEED project.
2. There are no wall pads in the MP room. Specification 114860 for the Gym Pads is provided for reference. The wall pads are provided by the owner and installed by the contractor.
3. Signage is an allowance. This will be included in Addendum No. 2.
4. See the scope clarifications in Addendum No. 1
5. This work will be assigned to Contract B5 Carpentry and General Work. The wire mesh to be vinyl-coated welded steel wire, max. spacing 2"x2", min. 16 ga.. Staple the wire mesh at 8" o.c. to wood studs spaced at 24" o.c. max. Wood sill shall be treated. Studs shall run up to the deck above. See Section A on Sheet AB3.1.

Response By: Martin Dusbiber Date: 12/3/2012

REQUEST FOR INFORMATION

TO: MARTIN DUSBIBER, DALLC RFI#: 38

FROM: CHRISTIAN J. MCCONE DATE: 30 NOV 12

PROJECT: POLYTECH HIGH SCHOOL RENOVATIONS & ADDITIONS – BID PACK 'B'

DWG. # / DETAIL: _____ SPEC. SECTIONS: 098433 PAGE: _____

REQUEST:

TechStar Industries represents and services **Leading Acoustics** and several leading noise/acoustic product manufacturers, throughout the country. Our goal is to provide assistance in product selection, specification, placement and implementation. As a full service company we also offer installation of all our products with performance guarantees.

Submitted By: Phil Hooser, TechStar Industries div. Mid-Atlantic Acoustics, Inc.
Date: 29 NOV 12

RESPONSE:

Based on the documentation received by TechStar Industries for the referenced Specification Section 098433, the information submitted is acceptable and allowed as an approved substitution.

Response By: Harry Pettoni Date: 11/30/12

REQUEST FOR INFORMATION

TO: MARTIN DUSBIBER, DALLC RFI#: 41

FROM: CHRISTIAN J. MCCONE DATE: 30 NOV 12

PROJECT: POLYTECH HIGH SCHOOL RENOVATIONS & ADDITIONS – BID PACK 'B'

DWG. # / DETAIL: _____ SPEC. SECTIONS: 275115 PAGE: _____

REQUEST:

Re: Bid Section 275115, Sound & Visual Systems

1. Confirm tentative/anticipated time frame for Audio Visual installation?
2. WILL THE AV CONSULTANT PROVIDE LINE DRAWINGS FOR THE AUDIO VISUAL SYSTEMS? Line drawings definitely are needed to quote this accurately. Without them, quoting is subject to a great deal of interpretation. We are requesting that Line Drawings be made available.
3. Auditorium: Please provide a Control System specification for this system, Crestron, Extron?
4. Drawing AD1.15 is using the Av symbol "AV1". Clarify what this symbol represents?
5. Drawing AD1.5 refers to the symbol AV11 as "AV Control Plate", confirm/clarify this item?
6. Confirm that all rooms receiving a LCD TV or LCD projector will use the manufacturer's supplied remote to control the display device?
7. Drawing AD1.9, verify what symbol AV11 represents?
8. Confirm all floor boxes and conduit will be provided by others, not the AV contractor?
9. Drawing AD1.9 calls for Mystery Electronics Floor pockets and inserts. Confirm that the AV contractor is responsible to provide only floor boxes called out in Av specification.
10. Warranty: (Part 1. General Requirements 1.6.B) Please clarify what is meant by "required adjustments" Special Warranty.

Submitted By: Shantel A. Sage, Account Manager Date: 30 NOV 12

RESPONSE:

1. The installation will be in the spring of 2014. See the spec for a detailed schedule.
2. Line drawings will not be provided. The drawings and specifications indicate the equipment required, location and scale.
3. A control system is not required or specified.
4. AV1 represents a PA speaker which is part of the phone system and is NIC
5. Symbol not found on drawing AD1.5 AV11 as indicated on the other drawings is covered in

the specifications.

6. Confirmed
7. See #5
8. Confirmed. See specifications for boxes to be provided by the A/V contractor at the stage.
9. Confirmed
10. The A/V contractor shall provide start up and training of all A/V systems. In addition, the A/V contractor shall include two system adjustments within a two year period. Systems requiring adjustment shall be under warranty for this two year period. Additional Special warranties from manufacturers will still be applicable.

Response By: DALLC Date: 3 Dec 12

REQUEST FOR INFORMATION

TO: MARTIN DUSBIBER, DALLC RFI#: 42

FROM: CHRISTIAN J. MCCONE DATE: 30 NOV 12

PROJECT: POLYTECH HIGH SCHOOL RENOVATIONS & ADDITIONS – BID PACK 'B'

DWG. # / DETAIL: _____ SPEC. SECTIONS: 275115 PAGE: _____

REQUEST:

1. On AC4.1, room 302P(Locker), the plans label the lockers in this room as "36", but #36 doesn't exist on the schedule on the same plan. Please clarify is these lockers are new work, and what type if so?

2. On AA4.1 detail 10(Alternate #6) an accessory schedule is said to be on AA6.1, but no such schedule exists.

A. Can the accessory schedule on AD4.6(used for Base Bid- Auditorium and classroom addition) be used for Alternate #6?

Submitted By: Velvet Bowen, Dover Building Supply Date: 29 NOV 12

RESPONSE:

1. The metal lockers and their concrete bases in Locker Room 302P are indeed new. They are not scheduled either on the FF&E Plan AC1.5 or the Enlarged Plan AC4.1. However, they are shown in Section 1/AC3.1 and in Interior Elevation 3/AC4.4, which also refers to the Specifications.
2. The Accessory Schedule for Interior Elevation 10/AA4.1 appears on the FF&E Plan, sheet AA1.5.1.

Response By: Martin Dusbiber Date: 12/03/2012

REQUEST FOR INFORMATION

TO: MARTIN DUSBIBER, DALLC RFI#: 44

FROM: CHRISTIAN J. MCCONE DATE: 3 DEC 12

PROJECT: POLYTECH HIGH SCHOOL RENOVATIONS & ADDITIONS – BID PACK 'B'

DWG. # / DETAIL: _____ SPEC. SECTIONS: _____ PAGE: _____

REQUEST:

1. Who owns concrete cuts removal and put back in existing areas were new drains and lines are being added at below grade.
2. Does Area B get insulation on exposed duct.
3. Who owns new equipment pads?
4. DMA 1.3 Both Areas are called out as "AR". Should the medical area have been labeled Area "AM" and be in Alt 4?
5. Is the bid date being extended?
6. In the boiler room, I could not find any drawing showing how the gas service gets in that room. Is gas to the room N.IC.?

Submitted By: Dave Ragolia, Estimator/Pre-Construction Project Manager CNCS-Mechanical Division

Date: 30 NOV 12

RESPONSE:

1. This work will be assigned to Contract B19 Mechanical and Plumbing
2. On Drawing MB1.1, notes 5, 6, and 9 describe the requirements for acoustic lining in ductwork. In Section 230230, page 4, article 2.3 describes duct liner as 1"thick material, and on page 6, article 3.1.K requires this ductwork to have one inch thick fiberglass external insulation as well. The external duct insulation shall meet the requirements of article 2.2.B on page 3.
3. The equipment pads for the mechanical equipment are assigned to Contract B-19. See scope item 19-7 on page 011100-54. The pads for the greenhouse equipment are assigned to Contract B-2 Concrete.
4. On Drawings DMA1.3 and MA1.3, the work shown in Rooms 201, 203, and 205 is work of Area AM – Alternate.
5. The bid opening date has been extended to Wednesday 12 Dec 12. See Addendum No. 1
6. Refer to Drawing P1.1 for the natural gas riser diagram affecting the work of the gas service into the boiler room.

Response By: Robert L Leitsch, P.E. Furlow Associates, Inc. Date: 12/4/12

REQUEST FOR INFORMATION

TO: MARTIN DUSBIBER, DALLC RFI#: 47

FROM: CHRISTIAN J. MCCONE DATE: 3 DEC 12

PROJECT: POLYTECH HIGH SCHOOL RENOVATIONS & ADDITIONS – BID PACK 'B'

DWG. # / DETAIL: _____ SPEC. SECTIONS: _____ PAGE: _____

REQUEST:

Drawing EPD1.2 shows the location of the junction boxes for the "Y" fixtures. Can you clarify what sections of the walk way you want to light up with the "Y" fixture?

Submitted By: Scott Frieze, Nickle Electric Date: 30 NOV 12

RESPONSE:

Refer to revised Drawing EPD1.2 under Addendum #3.

Response By: William J Slusser
Furlow Associates, Inc. Date: 12/4/12

REQUEST FOR INFORMATION

TO: MARTIN DUSBIBER, DALLC RFI#: 48

FROM: CHRISTIAN J. MCCONE DATE: 3 DEC 12

PROJECT: POLYTECH HIGH SCHOOL RENOVATIONS & ADDITIONS – BID PACK 'B'

DWG. # / DETAIL: _____ SPEC. SECTIONS: _____ PAGE: _____

REQUEST:

The greenhouse specifications refer to a "passage house" in several locations in regards to the accessories. It states the greenhouse manufacturer is to supply a cooler, heater, fan, and shades for this area. I do not see a passage house on the architectural drawings. It appears the greenhouse is directly attached to a locker room, which is conventional construction. These accessories do not appear to go in there. If you could please clarify this, it would be appreciated.

Craig Andersen
Crystal Structures, a division of
Sunshine Rooms, Inc.
800 222 1598 X111

Submitted By: Lynn Madden, Kent Construction, Inc. Date: 30 NOV 12

RESPONSE:
The greenhouse is attached directly to the new construction as indicated on the plans. The new construction takes the place of the specified passage house. Any specific related specified accessories for this area alone would not be required.

Response By: Martin Dusbiber Date: 12/04/2012

REQUEST FOR INFORMATION

TO: MARTIN DUSBIBER, DALLC RFI#: 49

FROM: CHRISTIAN J. MCCONE DATE: 3 DEC 12

PROJECT: POLYTECH HIGH SCHOOL RENOVATIONS & ADDITIONS – BID PACK 'B'

DWG. # / DETAIL: _____ SPEC. SECTIONS: 077200 PAGE: _____

REQUEST:

Attached please find our request for approval for substitution of acoustical smoke vents for the project listed above. Our model matches or exceeds specified requirements, with no difference in pricing, installation, scheduling or warranty.

Included are our substitution request form, product warranty, shop drawings, test results, product summary, competition comparison, and project references.

Submitted By: Scott Kragh, Nystrom Date: 3 DEC 12

RESPONSE:
This manufacturer is an approved substitution providing the product meets the intent of the drawings, specifications and related code requirements.

Response By: Martin Dusbiber Date: 12/04/2012

REQUEST FOR INFORMATION

TO: MARTIN DUSBIBER, DALLC RFI#: 50

FROM: CHRISTIAN J. MCCONE DATE: 3 DEC 12

PROJECT: POLYTECH HIGH SCHOOL RENOVATIONS & ADDITIONS – BID PACK 'B'

DWG. # / DETAIL: _____ SPEC. SECTIONS: 077200 PAGE: _____

REQUEST:

My name Ron Cantwell with Tate Engineering Systems, Inc., we have serviced Polytech's boilers for more than 30 years. We would like to ask that the Raypak XTherm condensing boiler be listed as an equivalent for this project. It exceeds the efficiency requirements and warranty periods (please see attached) with local sales and service within an hour of the job site. This unit can also be vented with PVC, CPVC (which provides a huge savings in installation and maintenance), or AL29-4C. We sold more than 75 Raypak units to Dover Air Force Base with 16 of them being XTherms and have had great reliability and would be glad to provide you a contact name for reference.

If approved can I also ask if the boilers need to be provided with BACnet interface or will a 4-20 mA interface be sufficient for this ATC set up provided by Tri-M Group? I can contact Dave Furio if you prefer.

Submitted By: Ron Cantwell, Tate Engineering Date: 3 DEC 12

RESPONSE:

1. The Raypak XTherm boiler will be added to the list of acceptable makes in Section 230400, page 6, article 2.2.F with the understanding that the conditions of paragraphs 1.6.A and 2.2.F.1 fully apply to all listed makes.

2. The vents for each boiler shall remain as specified with type AL29-4C in Section 230410, paragraph 2.1.

3. The boilers and associated pumps shall be activated by the ATC system as described in Section 230900, paragraph 2.8.B.3. Coordinate with Tri-M Group on any further specific hardware and software details.

Response By: Robert L Leitsch, P.E.
Furlow Associates, Inc. Date: 12/4/12

REQUEST FOR INFORMATION

TO: MARTIN DUSBIBER, DALLC RFI#: 51

FROM: CHRISTIAN J. MCCONE DATE: 3 DEC 12

PROJECT: POLYTECH HIGH SCHOOL RENOVATIONS & ADDITIONS – BID PACK 'B'

DWG. # / DETAIL: _____ SPEC. SECTIONS: 116143 PAGE: _____

REQUEST:

1. Section 116143 1.1 A. 7 What is this referring to? There is a Motorized lighting Front of house Lighting bar as part of the Theater Lighting specs Section 260511 1.1 K. , but I am not aware of there being an additional Front of House motorized hoist and control. Please advise.

2. The projection screen control (Section 116143 1.1 H. 2.f) is part of the Sound and Visual System. Section 275115 . We need to know which spec section will take precedence for this control and which contractor is responsible to furnish and install?

Submitted By: Kevin Short, Mid South Audio Date: 3 DEC 12

RESPONSE:

1. The FOH motorized light bar is to be provided by the A/V contractor as indicated on the drawings and as specified in section 260115. The related power wiring is by the electrical contractor. The controls for the light bar are as indicated on the drawings. There are no motorized stage rigging systems other than the indicated light bar.
2. The screen and controls are to be provided by the A/V contractor as indicated on the drawings and per specification section 275115. The related power wiring is by the electrical contractor.

Response By: Martin Dusbiber Date: 12/04/2012

REQUEST FOR INFORMATION

TO: MARTIN DUSBIBER, DALLC RFI#: 52

FROM: CHRISTIAN J. MCCONE DATE: 3 DEC 12

PROJECT: POLYTECH HIGH SCHOOL RENOVATIONS & ADDITIONS – BID PACK 'B'

DWG. # / DETAIL: AB1.1 & C/AB3.2 SPEC. SECTIONS: 123661 PAGE:

REQUEST:

1. Detail C/AB3.2 indicates the window sill as "Composite Sills". Please advise exactly what type of material is required here; Corian per Specification Section #123661 or some other type of material. Also, if these sills are not "Corian" please advise if these sill are to be part of Bid Package B-6 or B-5.

Submitted By: Keith D. Sepke, Estimator/Project Manager, Thoma, Inc. Date: 3 DEC 12

RESPONSE:

Window sills are to be as specified in section 123661. Product is to be Corian or approved equal as specified. The window sills are assigned to contract B-6 Manufactured Casework. See item 6-4 on page 011100-33.

Response By: Martin Dusbiber Date: 12/04/2012

REQUEST FOR INFORMATION

TO: MARTIN DUSBIBER, DALLC RFI#: 54

FROM: CHRISTIAN J. MCCONE DATE: 3 DEC 12

PROJECT: POLYTECH HIGH SCHOOL RENOVATIONS & ADDITIONS – BID PACK 'B'

DWG. # / DETAIL: _____ SPEC. SECTIONS: _____ PAGE: _____

REQUEST:

1) What is the location of the existing main gear?
2) What is the location of the existing generator and the ATS?
3) On drawing E 1.4 there is an emergency single line that has several panels, breakers and control wiring. Where is this equipment to be mounted since part of the controls tie into the dimmer board and the new mechanical room is running out of space. The only panel located on the drawings is EM-AUD which is located in the mechanical room.

Submitted By: Barry Miller, The Tri-M Group Date: 3 DEC 12

RESPONSE:

1. Existing gear is located in the Main Boiler Room. Refer to Drawing E-300 for location. Will be addressed under Addendum #2.

2. Refer to Drawing E300, Addendum #2.

3. New transfer switch and annunicator panels are located in the existing Boiler Room.

Response By: William J Slusser
Furlow Associates, Inc. Date: 12/4/12

REQUEST FOR INFORMATION

TO: MARTIN DUSBIBER, DALLC RFI#: 55

FROM: CHRISTIAN J. MCCONE DATE: 3 DEC 12

PROJECT: POLYTECH HIGH SCHOOL RENOVATIONS & ADDITIONS – BID PACK 'B'

DWG. # / DETAIL: _____ SPEC. SECTIONS: _____ PAGE: _____

REQUEST:

1. Specification section 075419 Part 1.2 Summary notes an "Adhered PVC roofing system" but then Part 3.6 notes "Mechanically Fastened Roofing System". Over lightweight concrete the system would have to be adhered. Over metal deck the system could be adhered or mechanically fastened. Typically, but not always, on a steel deck we'll see a layer of gypsum cover board go down first and then a self adhered vapor barrier. All the insulation and membrane are then set in adhesive so the vapor barrier is not penetrated. Please clarify- adhered or mechanically attached over steel deck.
2. Specification section 075419 Part 3 Execution, 3.5 letter H notes "Install cover boards over insulation…" however it is not listed under the products section of this specification. Please clarify product type and its location in the roof assembly.
3. Specification section 075419 Part 2.5 Vapor Retarder- Is this scheduled to be installed directly to the metal deck & the Lightweight concrete?
4. Specification section 075419 Part 3.9- Field Quality Control A-1 - Electric Field Vector Mapping (EFVM) is typically used in vegetative type roof systems. An infrared survey would be more appropriate. If EFVM is required please clarify what are Vector Mapping Conductive Mediums scheduled to be installed in the roof system.

Submitted By: Tim Brown H.K. Griffith Date: 3 DEC 12

RESPONSE:

1. Coverboards may be mechanically fastened or adhered per the Manufacturer's instructions. All other roofing and insulation layers should be fully adhered.
2. Coverboards should be ½" high density polyisocyanurate (min. density of 4 lb./c.f., and compressive strength of 100 psi), similar to "SecureShield HD+" by Carlisle. They are to be placed directly over the existing insulation, as a base for the new roofing.
3. The vapor barrier only to be used for new roofed areas.
4. The infrared survey is approved for this application.

Response By: Martin Dusbiber Date: 12/04/2012

REQUEST FOR INFORMATION

TO: MARTIN DUSBIBER, DALLC RFI#: 56

FROM: CHRISTIAN J. MCCONE DATE: 3 DEC 12

PROJECT: POLYTECH HIGH SCHOOL RENOVATIONS & ADDITIONS – BID PACK 'B'

DWG. # / DETAIL: _____ SPEC. SECTIONS: _____ PAGE: _____

REQUEST:

1. Where do you find information on the drawings on location of the existing generator, ATS switches, new panel EM-AUD, 100a disconnect, TX-5, 60a circuit breakers and the EM transfer cabinets?
2. Drawing EA1.2 Women's locker room has one fixture labeled "A" and one with no label in a room of all type "F's". Please clarify?
3. Drawing E1.2 & EA1.2 where is panel MDP located for RTU#4 in the weight room?
4. Do you use the same base detail on E300 for area that is not in grass?
5. EPD1.2 note #13 has 3-2" conduits for electric strip over the auditorium seating but there are 4 chain controls circuits for that area, is this for something different? There is no information shown for the locations of note #13.
6. Where do you find the circuits information for the EM transfer Cabinets?
7. Drawing EC1.2 - Where is there the relocation for the 75kva XFMR for PP-3A? There is no room in the corridor next to panels.
8. E300 – What are the two 1"c spare in the site lighting trenching, do they connect to each base?
9. There is reference to the Environmental Science Building for the location of panel NE on drawing E1.3. Need location.

Submitted By: Vernon Roberts, John W. Tieder Date: 3 DEC 12

RESPONSE:

1. a. Drawing E300, Addendum #2.
   b. Drawing E300, Addendum #2.
   c. Panel EM-AUD, Drawing EPD1.1 (Plan Location) Drawing E1.4 for Panel Schedule, wiring, TX-5 and EM transfer cabinets.
2. Change 'A' to 'F' and tag unlabeled fixture with 'F'. Refer to Drawing EA1.2, Addendum #2.
3. Main distribution switchboards "MAS" can be found on Drawing E300, Addendum #2.
4. New base detail. Refer to Drawing E-300, Addendum #2.
5. Will be detailed in Addendum #3.
6. Refer to Drawing ELD1.2, Circuits labeled 'EM'.
7. Transformer can be found in Utility Chemical 302A the bold box in the right corner. Will retag in Addendum #3.
8. Refer to drawing E-300, Addendum #2 Pole Base detail notes for conduits.
9. Refer to Drawing E-300, Addendum #2. Panel 'NE' is indicated.

Response By: William J Slusser, Furlow Associates, Inc. Date: 12/4/12

SECTION 088100 – FIRE-RATED GLAZING

PART 1 - GENERAL

1.1 RELATED DOCUMENTS

A. Drawings and general provisions of the Contract, including General and Supplementary Conditions and Division 1 Specification Sections, apply to this Section.

1.2 SUMMARY

A. Section includes fire-rated glazing for the following products and applications:

1. Interior doors.
2. Interior borrowed lites and sidelights. (Add.2)

B. Related Sections include the following:

1. Division 8 Section 081416 "Flush Wood Doors." for vision panels in interior wood doors.
2. Division 8 Section 081113 "Steel Doors and Frames." for vision panels in interior hollow metal doors and interior borrowed lite frames.
3. Division 8 Section 088000 "Glazing" for non-fire-rated glazing products.

1.3 PERFORMANCE REQUIREMENTS

A. General: Fire-rated glass, ceramic clear and wireless glazing material with surface-applied film listed for use in impact safety-rated locations such as doors and borrowed lites with fire rating requirements ranging from 20 minutes to 3 hours with required hose stream test.

B. Glass Design: Provide glass lites for various openings in nominal thicknesses indicated, but not less than the thicknesses required to meet applicable codes.

C. Fire-Rated Glazing Limitations Guide: Comply with the following:

Rating	Assembly	Max. Exposed Area (Sq. In.)	Max. Width Of Exposed Glazing (In.)	**OR**	Max. Height Of Exposed Glazing (In.)	Stop Height
20 min.	Doors					
	Hollow Metal Steel	3,204	36”		89”	5/8”
	Other than doors					
	Hollow Metal Steel	3,325	95”		95”	5/8”
45 min.	Doors					
	Hollow Metal Steel	3,204	36”		89”	5/8”

	Other than doors Hollow Metal Steel	3,325	95”	95”	5/8”
60 min.	Doors (non-temp. rise) Hollow Metal Steel	3,204	36”	89”	5/8”
	Doors (temp rise)	100	12”	33”	5/8”
	Other than Doors Hollow Metal Steel	3,325	95”	95”	5/8”
90 min.	Doors (non-temp. rise)	2,034	36”	56-1/2”	3/4”
	Doors (temp. rise)	100	12”	33”	1/2”
	Other than Doors Hollow Metal Steel	2,627	56-1/2”	56-1/2”	5/8”
3 Hrs.	Doors	100	12”	33”	1/2”

1.4 REFERENCES (Add.2)

A. American Architectural Manufacturers Association (AAMA)

1. AAMA 1503-1998: Voluntary Test Method for Thermal Transmittance and Condensation Resistance of Windows, Doors and Glazed Wall Sections

2. AAMA 2603-2002 - Voluntary Specification, Performance Requirements and Test Procedures for Pigmented Organic Coatings on Aluminum Extrusions and Panels.

3. AAMA 2604-2005 - Voluntary Specification, Performance Requirements and Test Procedures for High Performance Organic Coatings on Aluminum Extrusions and Panels.

B. American Society for Testing and Materials (ASTM):

1. Fire safety related:

a. ASTM E119: Methods for Fire Tests of Building Construction and Materials.

b. ASTM E2074-00: Standard Test Method for Fire Tests of Door Assemblies, Including Positive Pressure Testing of Side-Hinged and Pivoted Swinging Door Assemblies.

2. Material related

a. ASTM A 1008/A 1008M - Standard Specification for Steel, Sheet, Cold-Rolled, Carbon, Structural, High-Strength, Low Alloy, and High-Strength Low-Alloy with Improved Formability, Solution Hardened, and Bake Hardenable; 2007.

b. ASTM A 1011/A 1011M - Standard Specification for Steel, Sheet and Strip, Hot-Rolled, Carbon, Structural, High-Strength Low-Alloy and High-Strength Low-Alloy with Improved Formability, and Ultra-High Strength; 2006b.

3. Sound related:

a. ASTM E 90-04: Test Method for Laboratory Measurement of Airborne Sound Transmission Loss of Building Partitions and Elements

b. ASTM E 413-04: Standard Classification for Rating Sound Insulation

C. American Welding Society (AWS)
1. AWS D1.3 - Structural Welding Code - Sheet Steel;; 2007

D. Builders Hardware Manufacturers Association, Inc
1. BHMA A156 - American National Standards for door hardware; 2006 (ANSI/BHMA A156).

E. National Fire Protection Association (NFPA):
1. NFPA 80: Fire Doors and Windows.
2. NFPA 251: Fire Tests of Building Construction & Materials
3. NFPA 252: Fire Tests of Door Assemblies

F. Underwriters Laboratories, Inc. (UL):
1. UL 9: Fire Tests of Door Assemblies
2. UL 10 B: Fire Tests of Door Assemblies
3. UL 10 C: Positive Pressure Fire Tests of Window & Door Assemblies
4. UL 263: Fire tests of Building Construction and Materials

G. American National Standards Institute (ANSI):
1. ANSI Z97.1: Standard for Safety Glazing Materials Used in Buildings

H. Consumer Product Safety Commission (CPSC):
1. CPSC 16 CFR 120: Safety Standard for Architectural Glazing Materials

1.5 PERFORMANCE REQUIREMENTS (Add.2)

A. Fire Rating Requirements
1. Duration – Doors: Capable of providing a fire rating for 90 minutes.
2. Duration – Walls: Capable of providing a fire rating for 120 minutes.

B. Delegated design: For the performance requirements listed below requiring structural design provide data, calculations and drawings signed and sealed by an engineer licensed in the state where the project is located.

C. Structural Performance
1. Member deflection: Limit deflection of the edge of the glass normal to the plane of the glass to1/175 of the glass edge length or ¾ inch, whichever is less
2. Accommodate movement between storefront and adjoining systems

D. Air infiltration: Provide systems that allow a maximum air leakage through fixed glazed openings of 0.06 cfm/sq. ft. of area when tested per ASTM E 283 at a static air differential of 1.57 lbf/sq ft

1.6 SUBMITTALS

A. General: Comply with the requirements of Division 1 Section 013300 “Submittals”.

B. Product Data: Provide manufacturer’s technical data for each fire-rated glass product and glazing material indicated, including installation and maintenance instructions.

C. Shop Drawings: (Add.2)

1. Include plans, elevations and details of product showing component dimensions; framed opening requirements, dimensions, tolerances, and attachment to structure

2. Provide templates for the location of embeds and anchor locations required any adjoining work.

D. Frame samples for Initial Color Selection(Add.2): For steel frames with factory-applied powder coat color finishes.

1. Triplicate copies of manufacturer's powder coating color charts showing the full range of colors available.

2. Sample of brushed stainless steel frame

3. Verification Sample of selected finish on steel frame piece

E. Glass Samples: Provide 10-inch-square samples of each glass product specified.

F. Glazing Schedule: Use same designations indicated on Drawings for glazed openings in preparing a schedule listing glass types and thicknesses for each size opening and location.

G. Product Certificates: Signed by manufacturer of fire-rated glass products certifying that products furnished comply with requirements. Products shall be permanently labeled, designating type and thickness of glass, by a recognized certification agency or independent testing laboratory acceptable to authorities having jurisdiction.

H. Product Test Listing: Comply with UL, based on comprehensive testing of current products.

I. Qualification Data: For firms and persons specified in "Quality Assurance" Article to demonstrate their capabilities and experience. Include lists of completed projects with project names and addresses, names and addresses of architects and owners, and other information specified.

J. Adhesion and Compatibility Test Report: From glazing sealant manufacturer indicating glazing sealants were tested for adhesion to glass and glazing channel substrates and for compatibility with glass and other glazing materials.

K. Product Test Reports: From a qualified testing agency, indicating the specified products comply with requirements based on comprehensive testing of standard products. Provide product test reports for each glass product.

L. Warranties: Special warranties specified in this Section.

1.7 QUALITY ASSURANCE

A. Installer Qualifications: An experienced installer who has completed glazing similar in material, design, and extent to that indicated for Project and whose work has resulted in construction with a record of successful in-service performance.

B. Source Limitations for Fire-Rated Ceramic Glass: Obtain all fire-rated ceramic glass from one source from a single manufacturer.

C. Source Limitations for Fire-Rated Laminated Glass: Obtain all fire-rated laminated glass from one source from a single fabricator using the same type of glass and other components for each type of unit indicated.

D. Source Limitations for Glazing Accessories: Obtain all glazing accessories from one source from a single manufacturer for each product and installation method indicated.

E. Fire-Rated Door Assemblies: Assemblies complying with NFPA 80 that are listed and labeled by a testing and inspecting agency acceptable to authorities having jurisdiction, for fire ratings indicated, based on testing according to NFPA 252 and ASTM E 152.

F. Fire-Rated Window Assemblies: Assemblies complying with NFPA 80 that are listed and labeled by a testing and inspecting agency acceptable to authorities having jurisdiction, for fire ratings indicated, based on testing according to NFPA 257.

G. Certification(Add.2): Signed by manufacturers of glass and glazing products certifying that products furnished comply with requirements.

1. ***Door assemblies shall be tested to the acceptance criteria of ASTM E2074-00, NFPA 252, UL 9, UL 10-C Standard Methods of Fire Tests of Door Assemblies.***
2. ***Wall assemblies shall be tested to the acceptance criteria of ASTM E119, NFPA 251, UL 263 Standard Test Methods for Fire Tests of Building Construction and Materials.***

H. Fire-Rated Glass Labeling: Each lite shall be permanently labeled, designating type and thickness of glass, certifying it for use in tested and rated fire-protective assemblies, by a recognized certification agency or independent testing laboratory acceptable to authorities having jurisdiction.

I. Safety Glass: Category II materials complying with testing requirements in CPSC 16 CFR 1201 and ANSI Z97.1.

J. Glazing Publications: Comply with published recommendations of glass product manufacturers and organizations below, unless more stringent requirements are indicated. Refer to the following publications for glazing terms not otherwise defined in this Section or in referenced standards.

1. GANA Publications: GANA's "Glazing Manual"
2. FGMA Publications: FGMA's "Sealant Manual".
3. CSFM Publications: CSFM's "Fire Tests for Door and Window Assemblies".

K. Preinstallation Conference: Conduct conference at Project site.

1. Review and finalize construction schedule and verify availability of materials, Installer's personnel, equipment, and facilities needed to make progress and avoid delays.
2. Review temporary protection requirements for glazing during and after installation.

1.8 DELIVERY, STORAGE, AND HANDLING

A. Deliver fire-rated glazing materials in manufacturer's factory packaging, undamaged, complete with installation instructions.

B. At delivery, inspect all containers for damage, and report damage to manufacturer immediately.

C. Fully support glass and framing along their entire length.

D. Glass and frame units must be separated by non-abrasive pads such as cork or cloth. (Add.2)

E. Protect fire-rated glazing materials according to manufacturer's written instructions and as needed to prevent damage to glass and glazing materials from condensation, temperature changes, direct exposure to sun, or other causes.

1.9 PROJECT CONDITIONS

A. Environmental Limitations: Do not proceed with glazing when ambient and substrate temperature conditions are outside limits permitted by glazing material manufacturers and when glazing channel substrates are wet from rain, frost, condensation, or other causes.

B. Coordinate the work of this Section with others effected; including but not limited to masonry, lightweight steel framing and gypsum board, and finish hardware. (Add.2)

1.10 WARRANTY

A. General Warranty: Special warranties specified in this Article shall not deprive Owner of other rights the Owner may have under other provisions of the Contract Documents and shall be in addition to, and run concurrent with, other warranties made by Contractor under requirements of the Contract Documents.

B. Manufacturer's Special Warranty on Fire-Rated Glass: Written warranty, made out to Owner and signed by fire-rated glass manufacturer agreeing to furnish replacements for fire-rated glass units that deteriorate within specified warranty period indicated below.
   1. Warranty Period: 3 years from date of Substantial Completion.

PART 2 - PRODUCTS

2.1 GLASS PRODUCTS, GENERAL

A. Thickness: Where glass thickness is indicated, it is a minimum. Provide glass lites in thicknesses as needed to comply with requirements indicated.

2.2 MANUFACTURERS

A. Available Products: Subject to compliance with requirements, manufacturers of products that may be incorporated into the Work include, but are not limited to, the following:
   1. Fire-Rated Glazing Products – Ceramic Glass
      a. Nippon Electric Glass Co., Ltd. (Technical Glass Products 1-800-426-0279)
      b. Vetrotech, Inc.
      c. Schott North America, Inc.

   2. Fire-Rated Door and Wall Assembly; 120 Minute Rated (Add.2)
      a. Manufacturer Glazing Material: "Pilkington Pyrostop" fire-rated glazing as manufactured by the Pilkington Group and distributed by Technical Glass Products, 8107 Bracken Place SE, Snoqualmie WA; web site http://www.fireglass.com

b. Frame System: "Fireframes Heat Barrier Series" fire-rated brushed stainless steel frame system as manufactured and supplied by Technical Glass Products, 8107 Bracken Place SE, Snoqualmie, WA 98065; web site http://www.fireglass.com

2.3 FIRE-RATED CERAMIC GLASS

A. Fire-Rated Glass, General: Listed and labeled by a testing agency acceptable to authorities having jurisdiction, for fire-protection ratings indicated, based on testing according to NFPA 252 for door assemblies and NFPA 257 for window assemblies.

1. Type FR-1 Fire-Rated Glass: Monolithic ceramic glazing, clear, ceramic flat glass; 3/16-inch nominal thickness. For use in fire-rated applications where a SAFETY RATING IS NOT REQUIRED. Refer to Schedules for applied use.

   a. Basis-of-Design Product: Subject to compliance with requirements, provide "Nippon Electric Glass Co., Ltd. (distributed by Technical Glass Products); Standard FireLite" with the following characteristics or comparable product:
      Thickness: 3/16"
      Weight: 2.4 lbs./sq. ft.
      Visible Transmittance: 88%
      Visible Reflection: 9%
      Hardness: 700
      Positive Test Pressure: UL 10C

2. Type FR-2 Fire-Rated Glass: Film-faced ceramic glazing, clear, ceramic flat glass; 3/16-inch nominal thickness; faced on one surface with a clear glazing film; complying with ANSI Z97.1 and with testing requirements in 16 CFR 1201 for Category II materials. For use in fire-rated applications where a SAFETY RATING IS REQUIRED. Refer to Schedules for applied use.

   a. Basis-of-Design Product: Subject to compliance with requirements, provide "Nippon Electric Glass Co., Ltd. (distributed by Technical Glass Products); "FireLite NT" with the following characteristics or comparable product:
      Thickness: 3/16"
      Film: Fire-rated surface film
      Weight: 2.4 lbs./sq. ft.
      Visible Transmittance: 88%
      Visible Reflection: 9%
      Hardness: 700
      Positive Test Pressure: UL 10C

2.4 GLAZING TAPE FOR FIRE-RATED GLAZING MATERIALS

A. Glazing Tape: Closed cell polyvinyl chloride (PVC) foam, coiled on release paper over adhesive on two sides, maximum water absorption by volume of 2%.

1. Glass panels that exceed 1,393 sq. in. for a 90-minute rating must be glazed with fire-rated glazing tape supplied by manufacturer.

2.5 MISCELLANEOUS GLAZING MATERIALS

A. General: Provide products of material, size, and shape complying with referenced glazing standard, requirements of manufacturers of glass and other glazing materials for application indicated, and with a proven record of compatibility with surfaces contacted in installation.

B. Silicone Sealant: One part natural curing silicone, medium modulous sealant, Type S; Grade NS; Class 25 with additional movement capability of 50 percent in both extension and compression (total 100%).

1. Available products include, but are not limited to the following:
   a. Dow Corning 795; Dow Corning Group
   b. Silglaze-II 2800 – General Electric Co.
   c. Spectrem 2 – Tremco, Inc.

C. VOC Content: For Sealants used inside weatherproofing system, not more than 250 g/L when calculated according to 40 CFR 59, subpart D.

D. Cleaners, Primers, and Sealers: Types recommended by sealant or gasket manufacturer.

E. Setting Blocks: Neoprene, EPDM, or silicone; tested for compatibility with glazing compound; of 70 to 90 Shore A hardness.

F. Bituminous Paint (Add.2): Cold-applied, asphalt-mastic paint complying with SSPC-Paint 12 requirements, except containing no asbestos; formulated for 30-mil thickness per coat.

2.6 MATERIALS -120 MIN. RATED GLASS (Add.2)

A. Fire Rated Glazing: Composed of multiple sheets of Pilkington "Optiwhite" low iron, high-visible-light transmission glass laminated with an intumescent interlayer.

B. Impact Safety Resistance: ANSI Z97.1 and CPSC 16CFR1201 (Cat. I and II).

C. Properties Interior Glazing

Property	
Fire Rating	***120 minute***
Manufacturer's designation	***120-104***
Glazing type	***Insulated glass unit***
Nominal Thickness	***2-1/8 (54mm)***
Weight in lbs/sf	***21.71***
Daylight Transmission	***78%***
Sound Transmission Coefficient	***46dB***

2.7 MATERIALS – 120 MIN. RATED STEEL FRAMING

A. Steel Framing System, 120 min:
1. Frame: Brushed stainless steel formed tubing permanently joined with steel bolts.
2. Insulation: Insulate framing system against effects of fire, smoke, and heat transfer from either side. Insulate profiled steel tubing using a shell construction that incorporates Promatect-H intermediate interlayer. Firmly pack perimeter of framing

system to rough opening with mineral wool fire stop insulation or appropriately rated intumescent sealant.

3. ***Steel Glazing Beads: Extruded steel beads with dimensions recommended by manufacturer to securely hold glazing material in place.***
4. ***Fasteners: Type recommended by manufacturer***
5. ***Glazing Accessories: Set Pilkington Pyrostop glass using calcium silicate, or setting blocks.***
6. ***Glazing Gaskets, Compounds and tapes: Glaze Pilkington Pyrostop glass with approved EPDM glazing gaskets and [closed cell PVC tape], or [pure silicone sealant].***

2.8 MATERIALS – 90 MIN. RATED DOORS

A. Manufacturer's 90-minute rated single leaf door with finish hardware as scheduled elsewhere.

B. Coordinate door hardware with Set specified in Section 087100 Door Hardware

2.9 FABRICATION OF 120 MIN. RATED ASSEMBLY

A. Furnish interior frame assemblies welded.
1. ***When necessary, splice frames too large for shop fabrication or shipping or to fit in available building openings.***
2. ***Fit with suitable fasteners.***

B. Field glaze door and frame assemblies.

C. Factory prepare steel door assemblies and install all hardware.

D. Fabrication Dimensions: Fabricate fire rated assembly to field dimensions.

E. Obtain reviewed Shop Drawings prior to fabrication.

2.10 FINISHES, GENERAL

A. Comply with NAAMM's "Metal Finishes Manual for Architectural and Metal Products" for recommendations for applying and designating finishes.

B. Finish frames after assembly.

C. Protect finishes on exposed surfaces from damage by applying a strippable, temporary protective covering before shipping.

D. Appearance of Finished Work: Variations in appearance of abutting or adjacent pieces are acceptable. Noticeable variations in the same piece are not acceptable.

2.11 FACTORY FINISHES

A. Color and Gloss: As selected by Architect from manufacturer's full range.

2.12 FABRICATION OF GLASS AND OTHER GLAZING PRODUCTS

A. Fabricate glass and other glazing products in sizes required to glaze openings indicated for Project, with edge and face clearances, edge and surface conditions, and bite complying with written instructions of product manufacturer and referenced glazing standard, to comply with system performance requirements.

PART 3 - EXECUTION

3.1 EXAMINATION

A. Examine glass framing, with Installer present, for compliance with the following:

1. Manufacturing and installation tolerances, including those for size, squareness, and offsets at corners.
2. Minimum required face or edge clearances.
3. Observable edge damage or face imperfections.

B. Proceed with installation only after unsatisfactory conditions have been corrected.

3.2 INSTALLATION OF 120 MIN. RATED ASSEMBLY (Add.2)

A. Follow manufacturer's written instructions and reviewed shop drawings.

B. Install fully welded fire assembly in strict accordance with the approved shop drawings.

C. The manufacturer recommends 3/8 inch shim space at all walls.

D. Set continuous sill members and flashing in full sealant bed to produce a watertight installation

E. Install fire safing / fire stopping at edges of system

F. Install glazing in strict accordance with fire resistant glazing material manufacturer's specifications. Field cutting or tampering is not permissible.

G. Do not install damaged frames or chipped glassing units.

H. Install plumb and true. Limit out of plumb or true to 1/8 inch in 10'-0" in any dimension.

3.3 FIRE-RATED GLAZING, GENERAL

A. Clean glazing channels and other framing members receiving glass immediately before glazing. Remove coatings not firmly bonded to substrates.

B. Comply with combined written instructions of manufacturers of glass, sealants, gaskets, and other glazing materials, unless more stringent requirements are indicated, including those in referenced glazing publications.

C. Glazing channel dimensions, as indicated on Drawings, provide necessary bite on glass, minimum edge and face clearances, with reasonable tolerances. Adjust as required by Project conditions during installation.

D. Protect glass edges from damage during handling and installation. Remove damaged glass from Project site and legally dispose of off-site. Damaged glass is glass with edge damage or other imperfections that, when installed, could weaken glass and impair performance or appearance.

E. Install setting blocks in sill rabbets, sized and located to comply with referenced glazing publications, unless otherwise required by glass manufacturer. Set blocks in thin course of compatible sealant suitable for heel bead.

F. Do not exceed edge pressures stipulated by glass manufacturers for installing glass lites.

G. Provide edge blocking where indicated or needed to prevent glass lites from moving sideways in glazing channel, as recommended in writing by glass manufacturer and according to requirements in referenced glazing publications.

H. Cut glazing tape to length and set against permanent stops, flush with sight lines to fit openings exactly, with stretch allowance during installation.

I. Glaze vertically into labeled fire-rated metal frames with same fire rating as glass and push against tape for full contact at perimeter of pane or unit.

J. Place glazing tape on free perimeter of glazing. Press against tape for full contact at perimeter.

K. Set glass lites in each series with uniform pattern, draw, bow, and similar characteristics.

L. Install removable stop and secure without displacement of tape.

3.4 REPAIR AND TOUCH UP (Add.2)

A. Limited to minor repair of small scratches. Use only manufacturer's recommended products.
1. Such repairs shall match original finish for quality of material and view.
2. Repairs and touch-up not visible from 5 feet distant. Owner and Architect to approve.

3.5 CLEANING AND PROTECTION

A. Protect glass from contact with contaminating substances resulting from construction operations. If, despite such protection, contaminating substances do come into contact with glass, remove them immediately as recommended by glass manufacturer.

B. Remove and replace glass that is broken, chipped, cracked, abraded, or damaged in any way, including natural causes, accidents, and vandalism, during construction period.

C. Wash glass on both exposed surfaces in each area of Project not more than four days before date scheduled for inspections that establish date of Substantial Completion. Wash glass as recommended by glass manufacturer.

END OF SECTION 088100

SECTION 092900 - GYPSUM BOARD

PART 1 - GENERAL

1.1 SUMMARY

A. This Section includes the following:

1. Interior gypsum board.
2. Exterior gypsum board for ceilings and soffits.

1.2 SUBMITTALS

A. Product Data: For each type of product indicated.

B. Samples: For the following products:

1. Trim Accessories: Full-size Sample in 12-inch- long length for each trim accessory indicated.
2. Textured Finishes: Manufacturer's standard size for each textured finish indicated and on same backing indicated for Work.

1.3 QUALITY ASSURANCE

A. Fire-Resistance-Rated Assemblies: For fire-resistance-rated assemblies, provide materials and construction identical to those tested in assembly indicated according to ASTM E 119 by an independent testing agency.

B. STC-Rated Assemblies: For STC-rated assemblies, provide materials and construction identical to those tested in assembly indicated according to ASTM E 90 and classified according to ASTM E 413 by an independent testing agency.

C. Mockups: Before beginning gypsum board installation, install mockups of at least 100 sq. ft. in surface area to demonstrate aesthetic effects and set quality standards for materials and execution.

1. Install mockups for the following:

   a. Each level of gypsum board finish indicated for use in exposed locations.
   b. Each texture finish indicated.

2. Apply or install final decoration indicated, including painting and wallcoverings, on exposed surfaces for review of mockups.
3. Simulate finished lighting conditions for review of mockups.
4. Approved mockups may become part of the completed Work if undisturbed at time of Substantial Completion.

PART 2 - PRODUCTS

2.1 INTERIOR GYPSUM BOARD

A. General: Complying with ASTM C 36/C 36M or ASTM C 1396/C 1396M, as applicable to type of gypsum board indicated and whichever is more stringent.

1. Available Manufacturers: Subject to compliance with requirements, manufacturers offering products that may be incorporated into the Work include, but are not limited to, the following:

a. American Gypsum Co.
b. BPB America Inc.
c. G-P Gypsum.
d. Lafarge North America Inc.
e. National Gypsum Company.
f. PABCO Gypsum.
g. Temple.
h. USG Corporation.

B. Regular Type:

1. Thickness: 5/8 & 1/2 inch.
2. Long Edges: Tapered and featured (rounded or beveled) for prefilling.

C. Type X:

1. Thickness: 5/8 inch.
2. Long Edges: Tapered and featured (rounded or beveled) for prefilling.

D. Special Type X: Having improved fire resistance over standard Type X, and complying with requirements of fire-resistance-rated assemblies indicated on Drawings.

1. Thickness: As required by fire-resistance-rated assembly indicated on Drawings.
2. Long Edges: Tapered.

E. Flexible Type: Manufactured to bend to fit radii and to be more flexible than standard regular-type gypsum board of same thickness.

1. Thickness: 1/4 inch.
2. Long Edges: Tapered.

F. Ceiling Type: Manufactured to have more sag resistance than regular-type gypsum board.

1. Thickness: 1/2 inch.
2. Long Edges: Tapered.

G. Abuse-Resistant Type: Manufactured to produce greater resistance to surface indentation and through-penetration (impact resistance) than standard, regular-type and Type X gypsum board.

1. Core: Regular Type 5/8 inch, Type X.
2. Long Edges: Tapered.

H. Moisture- and Mold-Resistant Type: With moisture- and mold-resistant core and surfaces.

1. Core: 5/8 inch, Type X.
2. Long Edges: Tapered.

2.3 EXTERIOR GYPSUM SOFFIT BOARD

A. General: Complying with ASTM C 1396/C 1396M, with manufacturer's standard edges.

1. Manufacturers: Subject to compliance with requirements, available manufacturers offering products that may be incorporated into the Work include, but are not limited to, the following:

a. American Gypsum.
b. CertainTeed Corp.
c. Georgia-Pacific Gypsum LLC.
d. Lafarge North America Inc.
e. National Gypsum Company.
f. PABCO Gypsum.
g. Temple-Inland.
h. USG Corporation.

2. Core: As indicated on drawings.

B. Glass-Mat Gypsum Sheathing Board: ASTM C 1177/C 1177M, with fiberglass mat laminated to both sides and with manufacturer's standard edges.

1. Products: Subject to compliance with requirements, available products that may be incorporated into the Work include, but are not limited to, the following:

a. CertainTeed Corp.; GlasRoc Sheathing.
b. Georgia-Pacific Gypsum LLC; Dens-Glass Gold.
c. National Gypsum Company; Gold Bond, e(2)XP.
d. USG Corporation; Securock Glass Mat Sheathing.

2. Core: As indicated on drawings.

C. Cellulose Fiber-Reinforced Gypsum Sheathing Board: ASTM C 1278/C 1278M, gypsum sheathing, with manufacturer's standard edges.

1. Products: Subject to compliance with requirements, available products that may be incorporated into the Work include, but are not limited to, the following:

a. USG Corporation; Fiberock Aqua-Tough.

2. Type and Thickness: Type X, 5/8 inch thick.

3. Size: 48 by 120 inches.

2.2 TRIM ACCESSORIES

A. Interior Trim: ASTM C 1047.

1. Material: Galvanized or aluminum-coated steel sheet, rolled zinc, plastic, or paper-faced galvanized steel sheet.
2. Shapes:

   a. Cornerbead.
   b. Bullnose bead.
   c. LC-Bead: J-shaped; exposed long flange receives joint compound.
   d. L-Bead: L-shaped; exposed long flange receives joint compound.
   e. U-Bead: J-shaped; exposed short flange does not receive joint compound.
   f. Expansion (control) joint.
   g. Curved-Edge Cornerbead: With notched or flexible flanges.

2.3 JOINT TREATMENT MATERIALS

A. General: Comply with ASTM C 475/C 475M.

B. Joint Tape:

1. Interior Gypsum Wallboard: Paper.
2. Exterior Gypsum Soffit Board: Paper.
3. Glass-Mat Gypsum Sheathing Board: 10-by-10 glass mesh.
4. Tile Backing Panels: As recommended by panel manufacturer.

C. Joint Compound for Interior Gypsum Wallboard: For each coat use formulation that is compatible with other compounds applied on previous or for successive coats.

1. Prefilling: At open joints, rounded or beveled panel edges, and damaged surface areas, use setting-type taping compound.
2. Embedding and First Coat: For embedding tape and first coat on joints, fasteners, and trim flanges, use setting-type taping compound.

   a. Use setting-type compound for installing paper-faced metal trim accessories.

3. Fill Coat: For second coat, use drying-type, all-purpose compound.
4. Finish Coat: For third coat, use drying-type, all-purpose compound.

D. Joint Compound for Exterior Applications:

1. Exterior Gypsum Soffit Board: Use setting-type taping compound and setting-type, sandable topping compound.
2. Glass-Mat Gypsum Sheathing Board: As recommended by sheathing board manufacturer.

E. Joint Compound for Tile Backing Panels:

1. Water-Resistant Gypsum Backing Board: Use setting-type taping compound and setting-type, sandable topping compound.
2. Glass-Mat, Water-Resistant Backing Panel: As recommended by backing panel manufacturer.
3. Cementitious Backer Units: As recommended by backer unit manufacturer.

2.4 AUXILIARY MATERIALS

A. General: Provide auxiliary materials that comply with referenced installation standards and manufacturer's written recommendations.

B. Laminating Adhesive: Adhesive or joint compound recommended for directly adhering gypsum panels to continuous substrate.

1. Use adhesives that have a VOC content of 50 g/L or less when calculated according to 40 CFR 59, Subpart D (EPA Method 24).

C. Steel Drill Screws: ASTM C 1002, unless otherwise indicated.

1. Use screws complying with ASTM C 954 for fastening panels to steel members from 0.033 to 0.112 inch thick.
2. For fastening cementitious backer units, use screws of type and size recommended by panel manufacturer.

D. Sound Attenuation Blankets: ASTM C 665, Type I (blankets without membrane facing) produced by combining thermosetting resins with mineral fibers manufactured from glass, slag wool, or rock wool.

1. Fire-Resistance-Rated Assemblies: Comply with mineral-fiber requirements of assembly.

E. Acoustical Sealant: As specified in Division 07 Section "Joint Sealants."

F. Thermal Insulation: As specified in Division 07 Section "Thermal Insulation."

G. Vapor Retarder: As specified in Division 07 Section "Thermal Insulation."

PART 3 - EXECUTION

3.1 APPLYING AND FINISHING PANELS, GENERAL

A. Comply with ASTM C 840.

B. Examine panels before installation. Reject panels that are wet, moisture damaged, and mold damaged.

C. Isolate perimeter of gypsum board applied to non-load-bearing partitions at structural abutments, except floors. Provide 1/4- to 1/2-inch- wide spaces at these locations, and trim edges with edge trim where edges of panels are exposed. Seal joints between edges and abutting structural surfaces with acoustical sealant.

3.2 APPLYING INTERIOR GYPSUM BOARD

A. Install interior gypsum board in the following locations:

1. Regular Type: As indicated on Drawings.
2. Type X: As indicated on Drawings.
3. Ceiling Type: As indicated on Drawings.
4. Foil-Backed Type: As indicated on Drawings.
5. Moisture- and Mold-Resistant Type: As indicated on Drawings

3.3 APPLYING EXTERIOR GYPSUM PANELS FOR CEILINGS AND SOFFITS

A. Apply panels perpendicular to supports, with end joints staggered and located over supports.

1. Install with 1/4-inch open space where panels abut other construction or structural penetrations.
2. Fasten with corrosion-resistant screws.

3.4 APPLYING TILE BACKING PANELS

A. Water-Resistant Gypsum Backing Board: Install at showers, tubs, and where indicated. Install with 1/4-inch gap where panels abut other construction or penetrations.

B. Glass-Mat, Water-Resistant Backing Panel: Comply with manufacturer's written installation instructions and install at locations indicated to receive tile. Install with 1/4-inch gap where panels abut other construction or penetrations.

C. Cementitious Backer Units: ANSI A108.1, at locations indicated to receive tile.

D. Areas Not Subject to Wetting: Install regular-type gypsum wallboard panels to produce a flat surface except at showers, tubs, and other locations indicated to receive water-resistant panels.

E. Where tile backing panels abut other types of panels in same plane, shim surfaces to produce a uniform plane across panel surfaces.

3.5 INSTALLING TRIM ACCESSORIES

A. General: For trim with back flanges intended for fasteners, attach to framing with same fasteners used for panels. Otherwise, attach trim according to manufacturer's written instructions.

B. Control Joints: Install control joints according to ASTM C 840 and in specific locations approved by Architect for visual effect.

C. Interior Trim: Install in the following locations:

1. Cornerbead: Use at outside corners, unless otherwise indicated.

D. Exterior Trim: Install in the following locations:

1. Cornerbead: Use at outside corners.
2. LC-Bead: Use at exposed panel edges

3.6 FINISHING GYPSUM BOARD

A. General: Treat gypsum board joints, interior angles, edge trim, control joints, penetrations, fastener heads, surface defects, and elsewhere as required to prepare gypsum board surfaces for decoration. Promptly remove residual joint compound from adjacent surfaces.

B. Prefill open joints, rounded or beveled edges, and damaged surface areas.

C. Apply joint tape over gypsum board joints, except those with trim having flanges not intended for tape.

D. Gypsum Board Finish Levels: Level 5 for finish panels exposed to view.

a. Primer and its application to surfaces are specified in other Division 09 Sections.

E. Glass-Mat Gypsum Sheathing Board: Finish according to manufacturer's written instructions for use as exposed soffit board.

F. Glass-Mat Faced Panels: Finish according to manufacturer's written instructions.

G. Cementitious Backer Units: Finish according to manufacturer's written instructions.

3.7 PROTECTION

A. Protect installed products from damage from weather, condensation, direct sunlight, construction, and other causes during remainder of the construction period.

B. Remove and replace panels that are wet, moisture damaged, and mold damaged.

1. Indications that panels are wet or moisture damaged include, but are not limited to, discoloration, sagging, or irregular shape.
2. Indications that panels are mold damaged include, but are not limited to, fuzzy or splotchy surface contamination and discoloration.

END OF SECTION 092900

SECTION 096519 - RESILIENT TILE FLOORING

PART 1 GENERAL

1.1 SUMMARY

A. Section Includes:

1. Vinyl composition floor tile (Fritz)
2. Rubber interlocking 3/8” floor tiles

B. Related Work specified elsewhere

1. Resilient base – Section 096513

1.2 SUBMITTALS

A. Product Data: For each type of product indicated.

B. Samples: For each color and pattern of floor tile required.

C. Maintenance data.

1.3 QUALITY ASSURANCE

A. Fire-Test-Response Characteristics: As determined by testing identical products according to ASTM E 648 or NFPA 253 by a qualified testing agency.

1. Critical Radiant Flux Classification: Class I, not less than 0.45 W/sq. cm.

1.4 PROJECT CONDITIONS

A. Maintain ambient temperatures within range recommended by manufacturer in spaces to receive floor tile.

B. Until Substantial Completion, maintain ambient temperatures within range recommended by manufacturer.

C. Close spaces to traffic during floor tile installation.

D. Close spaces to traffic for 48 hours after floor tile installation.

E. Install floor tile after other finishing operations, including painting, have been completed.

PART 2 - PRODUCTS

2.1 VINYL COMPOSITION FLOOR TILE

A. Products: Subject to compliance with requirements, patching of the existing VCT flooring shall match existing.

2.2 INTERLOCKING RUBBER FLOOR TILE

A. Products: Subject to compliance with requirements, available products that may be incorporated into the Work include, but are not limited to, the following:

1. Tuff-N-Easy rubber interlocking 3/8" floor tiles or approved equal, distributed by MatsMatsMats.com. Color to be selected by the Architect and the owner. Product to be installed per the manufacturers requirements.

B. Material: SBR bonded granular recycled rubber, with EPDM in colored tiles.

C. Thickness: 3/8 inch

D. Size: 28.5 x 28.5 inches

E. Density: 60 lb/cubic foot

F. Compression & Recovery: 99.4% after 48 hours; 99.7% after 96 hours

G. Chemical Behavior: Resistant to water, diluted acids and alkaline solutions. Chemically neutral and UV resistant.

H. Colors and Patterns: As selected by Architect from full range of manufacturer's colors.

2.3 INSTALLATION MATERIALS

A. Trowelable Leveling and Patching Compounds: Latex-modified, portland cement based or blended hydraulic-cement-based formulation provided or approved by manufacturer for applications indicated.

B. Adhesives: Water-resistant type recommended by manufacturer to suit floor tile and substrate conditions indicated.

C. Floor Polish: Provide protective liquid floor polish products as recommended by manufacturer.

PART 3 - EXECUTION

3.1 PREPARATION

A. Prepare substrates according to manufacturer's written instructions to ensure adhesion of resilient products.

B. Concrete Substrates: Prepare according to ASTM F 710.

1. Verify that substrates are dry and free of curing compounds, sealers, and hardeners.
2. Remove substrate coatings and other substances that are incompatible with adhesives and that contain soap, wax, oil, or silicone, using mechanical methods recommended by manufacturer. Do not use solvents.
3. Alkalinity and Adhesion Testing: Perform tests recommended by manufacturer. Proceed with installation only after substrates pass testing.
4. Moisture Testing: Perform tests recommended by floor covering manufacturer. Proceed with installation only after substrates pass testing.
   a. Perform relative humidity test using in situ probes, ASTM F 2170. Proceed with installation only after substrates have a maximum 75% relative humidity level measurement.

C. Fill cracks, holes, and depressions in substrates with trowelable leveling and patching compound and remove bumps and ridges to produce a uniform and smooth substrate.

D. Do not install floor tiles until they are same temperature as space where they are to be installed.

1. Move resilient products and installation materials into spaces where they will be installed at least 48 hours in advance of installation.

E. Sweep and vacuum clean substrates to be covered by resilient products immediately before installation.

3.2 FLOOR TILE INSTALLATION

A. Comply with manufacturer's written instructions for installing floor tile.

B. Lay out floor tiles from center marks established with principal walls, discounting minor offsets, so tiles at opposite edges of room are of equal width. Adjust as necessary to avoid using cut widths that equal less than one-half tile at perimeter.

1. Lay tiles square with room axis to match existing.

C. Match floor tiles for color and pattern by selecting tiles from cartons in the same sequence as manufactured and packaged, if so numbered. Discard broken, cracked, chipped, or deformed tiles.

1. Lay tiles with grain running in direction to match existing.

D. Scribe, cut, and fit floor tiles to butt neatly and tightly to vertical surfaces and permanent fixtures including built-in furniture, cabinets, pipes, outlets, and door frames.

E. Extend floor tiles into toe spaces, door reveals, closets, and similar openings. Extend floor tiles to center of door openings.

F. Maintain reference markers, holes, and openings that are in place or marked for future cutting by repeating on floor tiles as marked on substrates. Use chalk or other nonpermanent, nonstaining marking device.

G. Adhere floor tiles to flooring substrates using a full spread of adhesive applied to substrate to produce a completed installation without open cracks, voids, raising and puckering at joints, telegraphing of adhesive spreader marks, and other surface imperfections.

3.3 CLEANING AND PROTECTION

A. Comply with manufacturer's written instructions for cleaning and protection of floor tile.

B. Floor Polish: Remove soil, visible adhesive, and surface blemishes from floor tile surfaces before applying liquid floor polish.

1. Apply two coat(s).

C. Cover floor tile until Substantial Completion.

END OF SECTION 096519

SECTION 260721: FIRE ALARM AND DETECTION SYSTEMS

PART 1 – GENERAL

1.1 DESCRIPTION OF WORK

A. This specification document provides the requirements for the installation, programming and configuration of a complete networked digital protocol analog addressable fire alarm system with distributed voice evacuation or approved equal. This system shall include, but not be limited to, system cabinet, power supply, built in Signaling Line Circuit (SLC), 4 line display 40 character each LCD annunciator, eight programmable Flexputs, built in dual line digital communicator associated peripheral devices, batteries, wiring, conduit and other relevant components and accessories required to furnish a complete and operational Life Safety System. The system shall have the interconnection capability for up to 16 panels. The specified panels' firmware must be enabled to support 16 panels and is to be provided by a Silent Knight "Select" certified Dealer. The networked system has two modes of operation, multiple panels covering one larger building, or multiple independent buildings.

B. It is the intent of these drawings, schedules and specifications to outline the scope of work required to furnish and install a complete and operating fire alarm and detection system for this project.

C. The following specifications and the associated drawings are for reference only and are to only indicate the intent for a required fire alarm system and the level of quality. These specifications and drawings shall not be used for the basis of providing a bid for the project. It will be the responsibility of the Electrical Contractor to obtain the services of a licensed fire alarm vendor in the State of Delaware to indicate the required items necessary for a complete and operational system as recognized by the NFPA, State Fire Marshal's Office and the ADA. This responsibility shall also include any coordination with fire protection interface, mechanical equipment shutdown, hood suppression interface, etc. During construction, the shop drawings shall be submitted and approved by the Authority Having Jurisdiction (AHJ). Any changes required by the AHJ during the shop drawing review or during the final walk-thru shall be the responsibility of the Electrical Contractor and shall not be passed on to the Owner, Architect or Engineer in the form of a change order.

D. Types of fire alarm and detection systems required in this section include the following:

Combination:	Manual and Automatic
Zoned:	Wing, Floor, Level, Area, Machine or Device
Non-Coded:	Continuous Signal

E. The system shall include all required hardware, raceways, interconnecting wiring and software to accomplish the intent of this specification and the contract drawings, whether or not specifically itemized herein.

F. All equipment furnished and installed shall be new and the latest state of the art products of a single manufacturer, engaged in the manufacturing and sale of the specified fire detection devices for over ten (10) years.

G. The system as specified shall be furnished, installed, tested and approved by the local Authority Having Jurisdiction, and shall be turned over to the owner in an operational condition. In the interest of job coordination and responsibility the installing contractor shall contract with a single supplier for fire alarm equipment, engineering, programming, inspection and tests for the complete system.

H. Demolition of existing fire alarm equipment indicated on plans, once the new system is installed, functioning and certified. Furnish temporary interface between the old existing system and the new fire alarm system, as both will exist side by side, during completion of the project.

I. Coordinate with Mechanical Contractor to furnish operations for air handling unit shutdown.

1.2 QUALIFICATIONS OF INSTALLERS

A. Before commencing work, submit data showing that the manufacturer has successfully installed fire alarm systems of the size, scope, type and design in projects of this type.

B. The manufacturer's vendor and his fire protection engineer shall have a minimum of five (5) years experience in, and be licensed and certified in, the design and installation of the selected fire alarm system being furnished for this project.

C. The installing contractor shall submit copies of all required Licenses and Bonds for his selected equipment vender, his fire protection engineer and his own as may be required by the City, County and State of Delaware.

1.3 MANUFACTURER'S REPRESENTATIVE

A. The electrical contractor shall furnish the services of a manufacturer factory trained and certified representative, experienced in the installation, operation, maintenance and service of the type of system being furnished. The representative shall be licensed in the State of Delaware. The representative shall supervise the installation, software documentation, adjustment, preliminary testing, final testing and certification of the system. The representative shall furnish the required instruction to the owner's personnel in the system's programming, operation and maintenance.

1.4 CODES, REGULATIONS AND STANDARDS

A. The publications listed below form a part of this specification to the extent referenced. The publications are referenced in the text by basic designation only. The latest version of each listed publication shall be used as a guide unless the authority having jurisdiction has adopted an earlier version.

B. Factory Mutual (FM)

1. FM AG Approval Guide

C. National Fire Protection Association (NFPA)

1. NFPA 70 National Electrical Code (NEC)
2. NFPA 72 National Fire Alarm Code
3. NFPA 90A Standard for the Installation of Air Conditioning and Ventilating Systems

4. NFPA 101 Life Safety Code
5. NFPA 170 Standard Fire Safety and Hazmat Symbols

D. Underwriters' Laboratories, Inc. (UL) Appropriate "UL" equipment standards

1. "UL" 864 Control Panels
2. "UL" 268 Smoke Detectors
3. "UL" 268A Smoke Detectors (HVAC)
4. "UL" 1076 Security
5. "UL" 1971 Standard for Visual Signaling Appliances

E. Building Codes

1. BOCA National Building Code and the BOCA Fire Code
2. Standard Building Code and the Standard Fire Code
3. Uniform Building Code and the Uniform Fire Code
4. International Building Code and the International Fire Code

F. State Codes and Regulations

1. Delaware State Fire Prevention Commission
2. State of Delaware
3. State Fire Prevention Regulations as amended through January 1995
4. Americans with Disabilities Act of 1990 and/or State and Local equivalency standards adopted by The Authority Having Jurisdiction.

1.5 COORDINATION

A. As a requirement of this project, the Electrical Contractor and/or his subcontractor or vendor shall furnish coordination for his equipment and layouts with other subcontractors or vendors furnishing equipment and services for Divisions 1 thru 23. Any and all contractors who install their equipment or furnish services prior to coordination, or any contractor who changes their equipment or services after coordination has occurred, without notifying associated subcontractors, shall be held responsible for making all required changes with no additional cost to the Owner, or delay in construction time.

B. The Mechanical, Plumbing, Fire Protection and Electrical Contractors are responsible to coordinate all manufacturer's recommended sizes for all circuit breakers, starters, disconnects, fuses, wire and conduit for all equipment. Submission of a shop drawing will certify that this has been completed.

C. The drawings and specifications reflect the type, number and size of services required for the equipment the design is based upon, should the supplying subcontractor elect to furnish an alternate piece of equipment requiring different services and/or space conditions, he shall inform the subcontractor furnishing those services and be held responsible to pay for all required changes as part of this contract.

1.6 SUBMITTALS

A. The installing contractor shall include the following information in his shop drawing equipment submittal:

1. Submit manufacturer's data on fire alarm and detection systems including, but not limited to, roughing-in diagrams and instructions for installation, operation and maintenance, suitable for inclusion in maintenance manuals. Also include a standard of a typical riser diagram and wiring diagram for equipment to be furnished and installed under this contract.

2. The fire alarm devices and equipment shown on the floor plans is indicated strictly to show intent and coordination with other trades, and shall not be taken to indicate a complete fire alarm and detection layout; meeting all NFPA, State and local codes for this project. It shall be the responsibility of the Electrical Contractor's sub-contractor/vendor and his fire protection engineer to produce a complete set of drawings indicating all required equipment, devices, wiring diagrams and components needed to meet and fulfill the requirements of the NFPA, State of Delaware's Office of the Fire Marshal and the Authority Having Jurisdiction.

3. One (1) complete set of the entire submittal shall be forwarded to the local Fire Marshal's Office for approval. The submission shall also include the following:

   a. Power calculations. Battery capacity calculations. Battery size shall be a minimum of 125 % of the calculated requirement.
   b. Supervisory power requirements for all equipment.
   c. Alarm power requirements for all equipment.
   d. Power supply justification showing power requirements for each of the system power supplies. Power supplies shall be sized to furnish the total connected load in a worst-case condition plus 25 % spare capacity.
   e. Voltage drop calculations for wiring runs demonstrating worst-case condition.
   f. NAC circuit design shall incorporate a 15% spare capacity for future expansion.

   The plan review by the Fire Marshal's Office shall be forwarded to the Project's Engineer, signed or under cover sheet, of approval from the Fire Marshal, as a shop drawing, once received in triplicate.

4. Complete manufacturer's catalog data including supervisory power usage, alarm power usage, physical dimensions, finish and mounting requirements.

5. Complete drawings covering the following shall be submitted by the Electrical Contractor for the proposed system:

   a. Floor plans in a CAD compatible format showing all equipment and raceways, marked for size, conductor count with type and size, showing the percentage of allowable National Electrical Code fill used.

   b. Furnish a fire alarm system matrix as referenced by NFPA 72 figure A-7.5.2.2 (1999). Matrix shall illustrate alarm input/output events in association with initiation devices. Matrix summary shall include system supervisory and trouble output functions.

c. Include any and all departures, exceptions, variances or substitutions from these specifications and/or drawings at the time of bid.

6. Should the above-mentioned information not be included in the shop drawing submission, the submission shall be rejected without processing and returned to the contractor.

PART 2 – PRODUCTS

2.1 ACCEPTABLE MANUFACTURERS

A. The model numbers provided are for use with the Silent Knight Farenhyt IFP-2000VIP fire alarm system and outline the products to be furnished for this project.

B. Approved equipment manufacturers and installing vendors:

1) Silent Knight
Advantech, Inc
4092 North DuPont Highway
Dover, Delaware 19901
(302) 674-8405

2) Silent Knight
B-Safe Security
109 Baltimore Ave
Wilmington, Delaware 19805

C. These specifications are designed and written in such a manner as to represent the minimum Fire Alarm and Detection System requirements. Any other components not indicated in these specifications, but deemed necessary by the selected manufacturer, for a complete and operational system, shall be included at no additional cost to the owner.

D. Once the vendor’s design has been through the Fire Marshal’s Office, and received his approval and been submitted as shop drawings any additional devices required by the Fire Marshal shall be taken from the spare equipment list. Refer to paragraph 5.3 SPARE EQUIPMENT herein.

2.2 GENERAL SYSTEM OPERATION

A. When an alarm occurs on an initiating device, the control panel indicates the alarm condition until manually reset.

B. An alarm may be acknowledged by actuating the "ACKNOWLEDGE" switch. This shall silence the panel buzzer, and change the "SYSTEM ALARM" LED from flashing to steadily lit.

C. This project shall be provided with synchronized audible and visual signaling devices. Activation of the signal silence switch at the fire alarm panel shall cause the audible signal to stop. The visual signal shall continue. If a subsequent initiating device causes an alarm, the audible signal shall resound. The visual signals shall continue until the system is reset. Synchronization shall be provided so that horns and strobes on different circuits will operate in unison.

D. If the microprocessor fails, the system shall execute a default signaling program. This program will enable the panel to sound the audible signals and summon the Fire Department. Inability of the system to sound signals or summon the fire department during microprocessor failure shall not be acceptable.

E. A single ground or open on the system signaling line circuit shall not cause system malfunction, loss of operating power or the ability to report an alarm from all initiating devices. A wire to wire short on the signaling line circuit shall cause fault isolation modules on either side to open allowing operation of all analog/addressable devices not located between the activated fault isolation modules.

2.3 SPECIFIC OPERATIONS

A. Operation of a manual station or automatic activation of any smoke detector, heat detector, or kitchen hood suppression system, shall cause the following:

1. Indicate on the Fire Alarm Control Panel and Annunciator Panels the specific device in alarm via the English-language alphanumeric display. The "ALARM" LED shall also flash and the local audible device shall pulse.

2. All strobes to flash in unison. All horns to sound a synchronized “Code 3” output. All speakers within the gymnasium, cafeteria, and auditorium to broadcast a “Code 3” pre-alert tone followed by a prerecorded voice message of the owner’s choice.

3. Shutdown all air handling units in the vicinity of the alarm. Provide an addressable relay module at each air handling unit for connection to the low voltage shutdown control circuit. If a 120VAC control circuit is to be interrupted by the fire alarm system, provide an addressable control relay and isolation relay rated for the control circuit load.

4. Printing and history storage equipment shall log the information associated with each alarm condition, along with the time and date of each occurrence.

5. Release all electrically locked or held-open doors.

6. Transmit the fire alarm condition to a U.L. listed central monitoring station, to dispatch the local Fire Department.

B. Supervisory/Trouble Operations

1. Alarm activation of a duct mounted smoke detector or sprinkler valve tamper switch, shall cause the exact device in alarm to be displayed on the fire alarm panel and remote annunciator alphanumeric display, and initiate a supervisory condition within the fire alarm panel.

2. Transmit a supervisory condition to the central monitoring facility.

3. Duct mounted smoke detectors, when in alarm, shall cause their associated air handling unit to shut down.

4. Activation of any trouble condition within the fire alarm system shall cause the trouble visual and audible indicators to operate within the fire alarm panel, the reason for the trouble condition to be shown in plain English on the alphanumeric display, and a trouble condition to be transmitted to the central monitoring facility.

C. The fire alarm system is to be connected to a U.L. listed central monitoring station, with the following requirements:

1. The entire installation shall comply with the requirements of NFPA 72, 2002 Edition (Remote Station Protective Signaling System) utilizing a Digital Alarm Communicator Transmitter (DACT) and a Digital Alarm Communicator Receiver (DACR).

2. The fire alarm system shall transmit alarm, trouble, and supervisory conditions, a daily test signal and the other signals required by NFPA 72.

3. The contractor shall be responsible for the entire installation (wiring, mounting of system components, connections at panel and the Digital Alarm Communicator Transmitter, programming, and functional testing).

4. The contractor shall coordinate with the owner to provide off-site monitoring of the fire alarm system. Off-site monitoring shall be provided by the Owner's U.L. listed central station facility, and paid for by the Owner.

5. The owner shall be responsible for providing two (2) standard telephone lines at the rate demarcation point for connection to the fire alarm system dialer, and pay for all charges from the telephone company.

6. Digital alarm communicator transmitter shall be an integral component of the fire alarm control panel, and not a separate unit. Provide Digital Alarm Communicator Transmitter.

D. The fire alarm control panel shall be provided with a firefighter's one-way voice paging system.

1. The one-way voice paging system shall consist of a voice command center audio message generator with microphone and all-call pushbutton, pre-recorded voice message chip, speaker circuits with selector switches/status indicators, and audio amplifiers.

   Provide a minimum of (1) speaker circuit per area required to have voice evacuation signaling. Speaker circuits to be wired using a Style Y (Class B) circuit. Speaker circuits shall be provided with a maximum usage of 80% of it's rated maximum output, to allow for future additions. Provide calculations and supporting data in submittal booklet, for verification by review authorities. 25 watt audio amplifiers shall be provided so that no amplifier will exceed 80% of it's maximum capacity, to allow for future additions. Provide calculations and supporting data in submittal booklet, for verification by review authorities.

E. The fire alarm control panel shall be provided with strobe indicating circuits. Strobe circuits to be wired using a Style Y (Class B) circuit. Auxiliary power supplies and circuits shall be provided so that neither power supply or circuit will exceed 80% of its rated output, based on the strobe light intensities required by NFPA 72. Provide calculations and supporting data in submittal booklet, for verification by review authorities.

F. The fire alarm control panel shall be provided with a minimum of two (2) signaling line circuits, so that no one circuit exceeds 80% of its rated maximum. Provide calculations and supporting data in submittal booklet, for verification by review authorities.

   Signaling line circuits shall be wired using a Style 7 (Class A) circuit, incorporating fault

isolation modules. Provide the required quantity of fault isolation modules so that no more than 20 analog/addressable devices are located between modules.

G. The fire alarm control panel components shall be housed in multiple cabinets of the same dimensions. All components shall be integrally compatible with the main central processor, to provide a neat, and professional appearance. The use of separate central processors, strobe power supplies, or audio evacuation panels at the main fire alarm control panel location is forbidden. Remote audio/visual power supplies, as shown on the drawings, is acceptable. Care shall be taken during the system design phase so that both audible and visual signals located in the same viewing area will be synchronized.

PART 3 – SYSTEM COMPONENTS

A. The fire alarm control panel (FACP) shall be the Silent Knight IFP-2000VIP analog addressable control panel. The audio amplifiers shall be the Silent Knight VIP-50 voice evacuation units. The FACP must have a 6 amp power supply and be capable of expansion to a maximum of 54 total amps via bus connected expander modules that supervise low battery, loss off AC and loss of communication.

1. The electrical contractor is required to arrange for and coordinate integration and/or interfaces with the School District's security system vendor, Advantech, Inc. of Dover, DE. The electrical contractor's fire alarm submittals must include a Coordinating Instructions document provided by the School District's security system vendor. The electrical contractor must employ the School District's security systems vendor to do the required fire alarm to security system integration and/or interfaces.

2. The system must contain at least one Silent Knight VIP-50 50 watt amplifier and shall be expandable to 400 watts utilizing up to 7 additional amplifiers. Each amplifier shall be capable of adding a 4 zone splitter (Silent Knight VIP-CE4) to distribute the audio information to different locations in the installation. The system shall have the capability of controlling up to 32 notification zones. The amplifiers must contain the capability of being remotely located through a four-wire communications circuit and a two-wire VBUS circuit. The system shall have the capability of adding up to 2 remote supervised microphones.

3. The voice evacuation system must have the capability of downloading up to three separate messages and utilize DSP technology for higher audio intelligibility.

4. The voice evacuation system shall be capable of operating at 25vrms or 70.7vrms and must be field selectable at the amplifier level. Systems that require additional modules for voltage conversion shall not be accepted.

5. The FACP must have Day/Night sensitivity capabilities on detectors and be capable of supporting up to 636 analog addressable points. (SLC) capable of supporting a minimum of 159 detectors and 159 module devices each. The FACP network must support up to sixteen FACP's on the network providing a maximum addressable point capacity of 10,176 points (636 x 8 = 10,176). The FACPs' firmware must be enabled to support 16 panels The system components must be provided and programmed by a Silent Knight "Select" certified dealer.

6. The FACP must support a minimum of eight programmable "Flexputs". The panel must have a built in 160 character LCD annunciator with the capability of having a minimum of eight supervised remote annunciators connected in the field.

7. The FACP must have a built in UL approved digital communicator. The communicator must allow local and remote up/downloading of system operating options, event history, and detector sensitivity data.

8. The FACP must automatically test the smoke detectors in compliance with NFPA standards to ensure that they are within listed sensitivity parameters and be listed with Underwriters Laboratories for this purpose.

9. The FACP must compensate for the accumulation of contaminants that affect detector sensitivity. The FACP must have day/night sensitivity adjustments, maintenance alert feature (differentiated from trouble condition), detector sensitivity selection, auto-programming mode (Jumpstart) and the ability to upgrade the core operating software on site or over the telephone.

10. The FACP shall have a Jumpstart feature that can automatically enroll all properly connected accessories into a functional system within 60 seconds of powering up the panel. Panels that do not have these capabilities will not be accepted.

11. The main communication bus (SBUS RS485) shall be capable of class A or class B configuration with a total Bus length of 6,000 feet.

B. System Wiring

1. The Signaling Line Circuit (SLC) and Data Communication Bus (S-BUS) shall be wired with standard NEC 760 compliant wiring, no twisted, shielded or mid capacitance wiring is required for standard installations. All FACP screw terminals shall be capable of accepting 14-18 AWG wire. All system wiring shall be in accordance with the requirements of NFPA 70, the National Electrical Code (NEC) and also comply with article 760 of the NEC.

C. Signaling Line Circuits

1. Each SLC shall be capable of a wiring distance of 10,000 feet from the SLC driver module (5815XL) and be capable of supporting 636 devices. The communication protocol to SLC devices must be digital. Any SLC loop device, which goes into alarm, must interrupt the polling cycle for priority response from the FACP. The FACP must respond consistently to a device that goes into alarm on an SLC in under 3 seconds. The auxiliary 5815XL SLC loop module must be capable of being located up to 6000 feet from the FACP on an RS-485 bus, which is separate from the SLC bus. The SLC shall be capable of functioning in a class A or class B configuration.

D. SLC loop devices

1. Devices supported must include analog photoelectric, ionization smoke detectors, analog heat detectors, addressable input modules, relay output modules or addressable notification modules. There is to be no limit to the number of any particular device type up to the maximum of 636, that can be connected to the SLC.

E. Analog detector functions

1. The products of combustion detectors must communicate analog values using a digital protocol to the control panel for the following functions:

   a. Automatic compliance with NFPA 72 standards for detector sensitivity testing
   b. Drift compensation to assure detector is operating correctly
   c. Maintenance alert when a detector nears the trouble condition
   d. Trouble alert when a detector is out of tolerance

F. Sensitivity function

1. The FACP shall have the ability to set three different sensitivity levels. A zone can be programmed to a day and a night sensitivity value. The day/night schedule shall allow for 16 holiday dates that are user programmable to allow the FACP to respond at the night level on those days.

G. Programmable FlexPuts

1. The FACP shall support eight programmable Flexput circuits that are capable of being programmed as supervised reverse polarity notification circuits or supervised auxiliary power circuits that can be programmed as continuous, reset able or door holder power. The circuits shall also be programmable as input circuits in class A or B configurations to support dry contact or compatible two wire smoke detectors.

H. Addressable Notification Module

1. The contractor shall furnish and install where indicated on the plans, addressable notification modules, Silent Knight model IDP-Control The modules shall be U.L. listed compatible with Silent Knight's IFP-2000VIP fire alarm control panel. The notification module must provide one class A (Style Z) or class B (Style Y) notification output with one auxiliary power input. The notification module must be suitable for mounting in a standard 4 square electrical box and must include a plastic cover plate. The notification module must provide an LED that is visible from the outside of the cover plate. The notification module must be fully programmable for such applications as required by the installation. The IDP-control shall reside on the SLC loop and can be placed up to 10,000ft. from the control or 5815XL SLC loop module.

I. Annunciators

1. The main control must have a built in annunciator with an 160-character LCD display and feature LED's for General alarm, Supervisory, System trouble, System Silence and Power. When in the normal condition the LCD shall display time and date based on a 200 year clock which is capable of automatic daylight savings time adjustments. All controls and programming keys are silicone mechanical type with tactile and audible feedback. Keys have a travel of .040 in.. No membrane style buttons will be permissible. The annunciator must be able to silence and reset alarms through the use of a keypad entered code. The annunciators must have twenty levels of user codes that will allow the limitation of operating system programming to authorized individuals.

J. Remote Annunciators

1. The fire system shall be capable of supporting up to eight remote annunciators. LCD Remote annunciator Model VIP-RM2000 shall have the same control and display layout so that they match identically the built in annunciator. Remote annunciators shall be available in red . Remote annunciators shall have the same functionality and operation as the built in annunciator. All annunciators must have -character LCD displays and must feature five LED's for general alarm, supervisory, system trouble, system silence, and system power. All controls and programming keys are silicone mechanical type with tactical and audible feedback. Keys shall have a travel of .040 inches. No membrane style buttons will be permitted.

2. The annunciator must be able to silence and reset alarms through the use of a code entered on the annunciator keypad . The annunciator must have twenty levels of user codes that will limit the operating system programming to authorized individuals. The control panel must allow all annunciators to accommodate multiple users input simultaneously. Remote annunciators shall be capable of operating at a distance of 6000 feet from the main control panel on unshielded non-twisted cable.

K. The fire system shall be able to support up to eight I/O modules (SK5880) that shall be used to drive remote LED graphic style displays and accommodate up to eight dry contact type switch inputs. The I/O modules shall each drive up to 40 LEDs without requiring external power connections. The I/O module inputs shall be supervised and be suitable for alarm and trouble circuits as well as reset and silence switches. The system shall also support up to 40 LED drivers that reside on the two-wire SLC loop. These driver boards shall contain 80 LED outputs that are powered by an external power source.

L. Serial/Parallel interface

1. The fire system shall be capable of supporting up to two serial / parallel interfaces (SK5824) that are capable of driving standard computer style printers. The interface shall be programmable as to what information is sent to it and shall include the ability to print out Detector Status by point, Event History by point and System Programming.

M. Distributed Power Module

1. The contractor shall supply a power module #RPS-1000 compatible with the IFP2000VIP fire alarm control panel. The power module must have 9 amps of output power, six flexput circuits rated at 3amps each, and two form C relay circuits rated at 2.5 amps at 24 volts DC. The fire system shall be capable of supporting a minimum of eight (8) RPS-1000 power modules. The six flexput circuits shall have the same functionality as the flexput circuits on the main panel. The Distributed Power Supply shall be capable of being connected via an RS-485 system bus (SBUS) at a maximum distance of 6000ft. from the main control panel. The power module shall contain an additional RS-485 bus that is completely compatible with all IFP-200VIP add on modules; including 5815XL SLC expanders, RA-2000-SK5880 annunciators, 5824 serial/parallel module and addressable devices. The power module will also act as a bus repeater so that additional RS-485 (modules) devices can be connected at a maximum distance of 6000ft. from the power module.

2. The power module's RS-485 bus shall be electrically isolated providing ground loop isolation and transient protection.

N. Digital Communicator

1. The digital communicator must be an integral part of the control panel and be capable of reporting all zones or points of alarm, supervisory, and trouble as well as all system status information such as loss of AC, low battery, ground fault, loss of supervision to any remote devices with individual and distinct messages to a central station or remote station. The communicator must also be capable of up/downloading of all system programming options, Event history and Sensitivity compliance information to a PC on site or at a remote location.

2. The communicator shall have an answering machine bypass feature that will allow the panel to respond to communication even on phone lines that have other communication equipment present. The communicator must be capable of reporting via SIA and Contact ID formats. The communicator shall have a delayed AC loss report function which will provide a programmable report delay plus a 10-25 min random component to help ease traffic to the central station during a power outage. No controls that use External modems for remote programming and diagnostics shall be accepted.

O. Dry Contacts

1. The FACP will have three form "C" dry contacts, one will be dedicated to trouble conditions, the other two will be programmable for alarm, trouble, sprinkler supervisory, notification, pre-alarm, waterflow, manual pull, aux. 1 or aux. 2. The trouble contact shall be normal in an electrically energized state so that any total power loss (AC and Backup) will cause a trouble condition. In the event that the Microprocessor on the FACP fails the trouble contacts shall also indicate a trouble condition.

P. Ground Fault Detection

1. A ground fault detection circuit shall be used to detect positive and negative grounds on all field wiring. The ground fault detector shall operate the general trouble devices as specified but shall not cause an alarm to be sounded. Ground faults will not interfere with normal operation, such as alarm, or other trouble conditions.

Q. Over Current Protection

1. All low voltage circuits will be protected by microprocessor controlled power limiting or have a self restoring polyswitches for the following: smoke detector power, main power supply, indicating appliance circuits, battery standby power and auxiliary output.

R. Test Functions

1. A "Lamp Test" mode shall be a standard feature of the fire alarm control panel and shall test all LED's and the LCD display on the main panel and remote annunciators.

2. A "Walk Test" mode shall be a standard feature of the fire alarm control panel. The walk test feature shall function so that each alarm input tested will operate the associated notification appliance for two seconds. The FACP will then automatically perform a reset and confirm

normal device operation. The event memory shall contain the information on the point tested. the zone tripped, the zone restore and the individual points return to normal.

3. A “Fire Drill” mode shall allow the manual testing of the fire alarm system notification circuits. The “Fire Drill” shall be capable of being controlled at the main annunciator, remote annunciators and via a remote contact input.

4. A “Bypass Mode” shall allow for any point or nac circuit to be bypassed without effecting the operation of the total fire system.

S. Remote Input Capabilities

1. The control panel shall have provisions for supervised switch inputs for the purpose of Alarm reset and Alarm and trouble restore.

T. Notification Appliance Mapping Structure

1. All notification circuits and modules shall be programmable via a mapping structure that allows for a maximum of 999 output groups. Each of these groups shall have the ability to be triggered by any of the panels 999 Zones. A zone may trigger from groups individually, or may contain a global trigger for manual pull stations, fire drills and two different system alarms. Additionally each Zone will individually control the cadence pattern of each of the Groups that it is “Mapped” to so that sounders can indicate a variety of conditions. The Zone shall be capable of issuing a different cadence pattern for each of the Groups under it’s control. The mapping structure must also allow a group to be designated to “ignore cadence” for use with strobes and other continuous input devices. Zones shall have eight different output categories; Detector alarm, Trouble, Supervisory, Pre-alarm, Waterflow, Manual pull, Zone auxiliary one and Zone Auxiliary two. Each of the categories shall have the ability to control from 1 to 8 output groups with a cadence pattern. The patterns are; March code, ANSI 3.41, Single Stroke Bell Temporal, California code, Zone 1 coded, Zone 2 coded, Zone 3 coded, Zone 4 coded, Zone 5 coded, Zone 6 coded, Zone 7 coded, Zone 8 coded, Custom output pattern 1, Custom output pattern 2, Custom output pattern 3, Custom output pattern 4, and Constant. This mapping/cadence pattern shall be supported by all system power supplies and Notification Expander Modules.

U. Downloading Software

1. The fire alarm control panel must support up/downloading of system programming from a PC under Windows 3.1 or Windows 95, 98 & Windows N/T. The FACP must also be able to download the detector sensitivity test results and a 1000 event system event buffer to the PC. Communication shall take place over a direct connection to the PC and/or via the same telephone lines as the built in digital communicator and shall not require an external modem to be connected to the panel. The downloading software shall contain a code that will block unauthorized persons from accessing the panel via direct connection or over the phone lines.

V. Service reminder

1. The FACP shall be capable of automatically generating textual service reminder and the main and remote annunciator LCD’s to inform the user of required testing or service. The service reminder shall not interfere with the normal operation of the FACP.

W. English language descriptions

1. The FACP shall provide the ability to have an text description of each system device, input zone and output group on the system. The use of individual lights to provide descriptions will not be acceptable.

PART 4 – SYSTEM OPERATION

4.1 ALARM

A. When a device indicates any alarm condition the control panel must respond within 3 seconds. All programmed audio and visual devices will activateat this time. The General Alarm or Supervisory Alarm LED on the annunciator(s) should light and the LCD should prompt the user as to the number of current events. The alarm information must be stored in event memory for later review. Event memory must be available at the main and all remote annunciators.

B. When the alarmed device is restored to normal, the control panel shall be required to be manually reset to clear the alarm condition, except that the alarms may be silenced as programmed.

C. An alarm shall be silenced by a code or Firefighter key at the main or remote annunciators. When silenced, this shall not prevent the resounding of subsequent events if another event should occur (subsequent alarm feature). When alarms are silenced the silenced LED on the control panel, and on any remote annunciators shall remain lit, until the alarmed device is returned to normal

4.2 TROUBLES

A. When a device indicates a trouble condition, the control panel System Trouble LED should light and the LCD should prompt the user as to the number of current events. The trouble information must be stored in event memory for later review. Event memory must be available at the main and all remote annunciators.

B. When the device in trouble is restored to normal, the control panel shall be automatically reset, The trouble restore information must be stored in event memory for later review. Event memory must be available at the main and all remote annunciators. A trouble shall be silenced by a code or Firefighter key at the main or remote annunciators. When silenced, this shall not prevent the resounding of subsequent events if another event should occur.

4.3 SUPERVISION METHODS

A. Each SLC loop shall be electrically supervised for opens and ground faults in the circuit wiring, and shall be so arranged that a fault condition on any loop will not cause an alarm to sound. Additionally, every addressable device connected to the SLC will be supervised and individually identified if in a fault condition. The occurrence of any fault will light a trouble LED and sound the system trouble sounder, but will not interfere with the proper operation of any circuit which does not have a fault condition.

B. Each indicating appliance circuit shall be electrically supervised for opens, grounds and short circuit faults, on the circuit wiring, and shall be so arranged that a fault condition on any indicating appliance circuit or group of circuits will not cause an alarm to sound. The occurrence of any fault will light the trouble LED and sound the system trouble sounder, but will not interfere with the proper operation of any circuit which does not have a fault condition.

PART 5 – CONTROL UNIT

5.1 SYSTEM CABINET

A. Mounting

1. The system cabinets shall be red and can be either surface or flush mounted. The cabinet door shall be easily removable to facilitate installation and service.

B. Audible System Trouble Sounder

1. An audible system trouble sounder shall be an integral part of the control unit. Provisions shall also be provided for an optional supervised remote trouble signal.

C. Power Supply and Charger:

1. The entire system shall operate on 24 VDC, filtered switch mode power supply with the rated current available of 9 Amps. The FACP must have a battery charging circuit capable of complying with the following requirements:

   a. Twenty-four (24) hours of battery standby with five (5) minutes of alarm signaling at the end of this twenty-four (24) hour period (as required per NFPA 72 central station signaling requirements) using rechargeable batteries with automatic charger to maintain gel-cell batteries in a fully charged condition.

2. The power supply shall comply with U.L. Standard 864 for power limiting.

3. The FACP will indicate a trouble condition if there is a loss of AC power or if the batteries are missing or of insufficient capacity to support proper system operation in the event of AC failure. A “Battery Test” will be performed automatically every minute to check the integrity of the batteries. The test must disconnect the batteries from the charging circuit and place a load on the battery to verify the battery condition.

4. In the event that it is necessary to provide additional power one or more of the model RPS-1000 Distributed Power Modules shall be used to accomplish this purpose.

D. Connections and Circuits

1. Connections to the light and power service shall be on a dedicated branch circuit in accordance with the National Fire Alarm Code NFPA 72, National Electrical Code (NEC) NFPA 70, and the local authority having jurisdiction (AHJ).

2. The circuit and connections shall be mechanically protected.

3. A circuit disconnecting means shall be accessible only to authorized personnel and shall be clearly marked “FIRE ALARM CIRCUIT CONTROL”.

PART 6 – ACCESSORY COMPONENTS

6.1 The FACP shall support the following devices on the RS-485 data bus:

VIP-VCM	Voice Control Module
VIP-SW16	Additional 16 Zone Switch Module
VIP-50	50 Watt Amplifier (8 max.)
VIP-CE4	4 Zone Splitter
VIP-RM2000	Remote Microphone (2 max.)
5815XL	Signaling Line Circuit Expander (SLC) Module
5824	Printer Interface Module
RA-2000	LCD Remote Annunciator
5865-3	LED Remote Annunciator
5865-4	LED Remote Annunciator with reset and silence switches
5880	LED I/O module
RPS-1000	Intelligent Distributed Power Module
5495	Remote Power Supply 6.0 Amp
5496	Remote Addressable Power Supply 6.0 Amp
5499	Remote Power Supply 9.0 Amp

6.2 Each node shall support the operation of 159 detectors and 159 addressable module total devices per SLC loop without regard to device type. The following devices shall be supported:

IDP-Photo	Addressable Photoelectric Smoke detector
IDP-Photo-T	Addressable Photoelectric Smoke detector with Thermal
IDP-Ion	Addressable Ionization Sensor
IDP-Heat	Addressable Heat Sensor
IDP-Heat-ROR	Addressable Heat with Rate of Rise
IDP-Heat-Ht	Addressable Heat High temp 190°
IDP-Acclimate	Addressable Multi Criteria Smoke detector with thermal
IDP-6AB	6” detector base
SSDNR	Addressable Photoelectric duct Detector does not include head
SSD2	Addressable Photoelectric duct Detector with Head
SSDCOIL	required on D2 and DNR if a remote test
IDP-Relay	Addressable Relay Module
IDP-Relay-6	Addressable Multi Relay Module
IDP-Monitor	Addressable Input Module (Class A or B)
IDP-Minimon	Mini Input Module
IDP-Monitor-2	Addressable Dual Input Module
IDP-Monitor-10	Addressable Multi Input Module (10)
IDP-Control	Addressable Notification Module
IDP-Control-6	Addressable Notification Multi Module (6)
IDP-Zone	Two Wire Smoke Detector Module
IDP-Zone-6	6 Multi Smoke Detector Module
IDP-Iso	Isolation Module
IDP-Beam	Addressable Beam Detector
IDP-Beam-T	Addressable Beam Detector with Test feature

SSB224RB	Detector Relay Base
SSB501BHT	Detector Sounder Base
SSRTS451KEY	Remote Test Switch For Photoelectric Duct Detector
IDP-Pull-SA	Addressable Single Action Pull Station
IDP-Pull-DA	Addressable Dual Action Pull Station

The FACP shall support these other Silent Knight devices via addressable input, addressable Notification, or Addressable Output Modules.

PS-DATK Dual action Manual Pull Station – Key Reset

6.3 MANUAL FIRE ALARM STATIONS

A. Manual Fire Alarm Stations shall be non-coded, double action type, with a key operated test-reset lock in order that they may be tested, and so designed that after actual emergency operation, they cannot be restored to normal except by use of a key. The reset key shall be so designed that it will reset manual station and open FACP without use of another key. An operated station shall automatically condition itself so as to be visually detected, as operated, at a minimum distance of fifty feet, front or side. Manual stations shall be constructed of die cast metal with clearly visible operating instructions on the front of the stations in raised letters. Stations shall be suitable for surface mounting on matching backbox, or semi-flush mounting on a standard single-gang box, and shall be installed within the limits defined by the Americans with Disabilities Act (ADA) dependent on manual station accessibility or per local requirements. Manual stations shall be Model IDP-Pull. If using conventional pull stations they must be installed in conjunction with an Addressable Input Module (IDP-Monitor) or Mini Input Module (IDP-Minimon) used with the manual stations. Shall be Silent Knight Model PS-DATK, PS-SATK, PS-DA or PS-SA and Underwriters Laboratories listed when used with addressable modules.

6.4 REMOTE POWER SUPPLIES

A. The Remote Power Supplies for Notification appliances shall be the Silent Knight Model RPS-1000. The Model RPS-1000 Intelligent Power Supply shall hang on the main S-Bus and be programmed through the IFP-2000VIP control. It will support 6 amps of 24 volt DC power, with 6 Flexput circuits, rated at 3 amps each. Two additional 5815XL SLC loop expanders shall be capable to be installed in the cabinet. The power supply will also regenerate the S-Bus for an additional 6000’.

B. The remote power supply model 5499 or 5495 may also be used on the system. These power supplies are activated by the IDP-Control module and support 24VDC power, with 4 notification circuits, rated at 3 amps each. The total power on a 5495 is 6 amps. The total power on a 5499 is 9 amps. These power boosters may also be activated from another notification circuit from either the fire alarm control, a distributed power supply (RPS-1000).

6.5 NOTIFICATION DEVICES

A. The visual and audio/visual signaling devices shall be compatible with the IFP-2000VIP, as stated in the installation manuals and be Listed with Underwriters Laboratories Inc. per UL 1971 and/or 1638. Each indicating appliance circuit shall be electrically supervised for opens, grounds and short circuit faults, on the circuit wiring, and shall be so arranged that a fault condition on any indicating appliance circuit or group of circuits will not cause an alarm to sound. The occurrence

of any fault will light the trouble LED and sound the system trouble sounder, but will not interfere with the proper operation of any circuit which does not have a fault condition. The notification appliance (combination audio/visual units only) shall produce a peak sound output of 90dba or greater as measured in an anechoic chamber. The appliance shall be capable of meeting the candela requirements of the blueprints presented by the Engineer and ADA. The appliance shall be polarized to allow for electrical supervision of the system wiring. The unit shall be provided with terminals with barriers for input/output wiring and be able to mount a single gang or double gang box or double workbox with the use of an adapter plate. The unit shall have an input voltage range of 19-30 volts.

6.6 SMOKE DETECTORS

A. Smoke detectors shall be Silent Knight model IDP-Photo ceiling mounted, Analog/Addressable photoelectric smoke detectors. The combination detector head and twist lock base shall be U.L. listed compatible with the Silent Knight IFP-2000 fire alarm control panel.

B. The base shall permit direct interchange with Silent Knight's IDP-Ion ionization smoke detector or the IDP-Heat detector. The base shall be the appropriate twist lock base IDP-6AB

C. The smoke detector shall have a flashing status LED for visual supervision. When the detector is actuated, the flashing LED will latch on steady at full brilliance. The detector may be reset by actuating the control panel's reset switch. The sensitivity of the detector shall be capable of being selected and measured by the control panel without the need for external test equipment.

D. The vandal security-locking feature shall be used in those areas as indicated on the drawing. The locking feature shall be field selectable when required. It shall be possible to perform a sensitivity test of the detector without the need of generating smoke. The test method shall simulate the effects of products of combustion in the chamber to ensure testing of the detector circuits.

E. Detectors shall have completely closed back to restrict entry of dust and air turbulence and have a 30 mesh insect screen. Electronics of the unit shall be shielded to protect against false alarms from E.M.I. and R.F.I.

6.7 HEAT DETECTORS

A. Furnish and install analog/addressable heat detectors, Silent Knight model IDP-Heat. The combination heat detector and twist lock base shall be U.L. listed compatible with the Silent Knight IFP-2000 fire alarm control panel.

B. The base shall permit direct interchange with the Silent Knight IDP- Ionization smoke detector and the IDP-Photo photoelectric smoke detector. The base shall be appropriate twist lock base IDP-6AB.

C. The heat detector shall have a flashing status LED for visual supervision. When the detector is actuated, the flashing LED will latch on steady at full brilliance. The detector may be reset by actuating the control panel's reset switch. The vandal security-locking feature shall be used in those areas as indicated on the drawings. Electronics of the unit shall be shielded to protect against false alarms from E.M.I. and R.F.I.

6.8 DUCT DETECTORS

A. Duct Detector shall be Silent Knight SSDNR with an IDP-Photo smoke head.

PART 7 – WIRING

7.1 INSTALLER'S RESPONSIBILITIES

A. The installer shall coordinate the installation of the fire alarm equipment.

B. All conductors and wiring shall be installed according to the manufacturer's

C. It shall be the installer's responsibility to coordinate with the supplier, regarding the correct wiring procedures before installing any conduits or conductors.

7.2 INSTALLATION OF SYSTEM COMPONENTS

A. System components shall be installed in accordance with the latest revisions of the appropriate NFPA pamphlets, the requirements contained herein, National Electrical Code, local and state regulations, the requirements of the fire department and other applicable authorities having jurisdiction (AHJ).

7.3 All wire used on the fire alarm system shall be U.L. Listed as fire alarm protection signaling circuit cable per National Electrical Code, Articles 760.

PART 8 – WARRANTY AND FINAL TEST

8.1 GENERAL

A. The electrical contractor shall warrant all equipment and wiring free from inherent mechanical and electrical defects for one year (365 days) from the date of final acceptance.

B. Spare Equipment

1. The Electrical Contractor shall furnish up to five (5) in any combination of fire alarm devices selected by the Owner, including but not limited to smoke, heat, duct, monitor module, control monitor module, or audio/visual devices for Owner spare.

C. In addition to the equipment shown on the project drawings, include twenty-five (25) additional peripheral devices of any type (i.e. smoke detector, duct smoke detector, heat detector, pull station. Monitor module, relay module, control module, horn/strobe, speaker/strobe, strobe, etc.).

These devices may be installed at the discretion of the local Fire Marshal, the project engineer, or the licensed fire alarm company, upon review and/or testing performed by all.

If necessary, these devices, along with the required panel additions, wiring, labor, etc., shall be furnished and installed at no additional cost to the owner. If, at the end of the project, they are not required to be installed, they shall be given to the owner for their use.

D. Concurrent with the warranty period, the licensed fire alarm contractor shall provide (2) semi-annual inspections of the completed fire alarm system in accordance with the State of Delaware Fire Prevention Regulations. All costs shall be included in the contract amount. No additional fees will be paid by the owner for this service.

8.2 FINAL TEST

Before the installation shall be considered completed and acceptable by the awarding authority, a test of the system shall be performed as follows:

A. The contractor’s job foreman, the fire alarm distributor’s assigned technician, a representative of the owner, and a representative of the Fire Marshal’s Office.

B. The contractor's job foreman, in the presence of a representative of the owner, and the fire marshal's office shall operate every building fire alarm device to ensure proper operation and correct annunciation at each remote annunciator and control panel.

C. One half (1/2) of all tests shall be performed on battery standby power.

D. Where application of heat would destroy any detector, it may be manually activated.

E. When the testing has been completed to the satisfaction of both the contractor's job foremen and the representatives of the manufacturer and owner, a State of Delaware "Fire Alarm Signaling System Certificate of Installation" shall be completed and signed by the necessary personnel.

F. The contractor shall leave the fire alarm system in proper working order, and without additional expense to the owner, shall replace any defective materials or equipment provided by him under this contract within one (1) year (365 days) from the date of final acceptance by the awarding authority. Warranty work shall be completed during normal business hours, a maximum of 24 hours after notification of the service request.

G. Provide service response within (1) hour during a "false alarm" condition.

8.3 AS-BUILT DRAWINGS, TESTING, AND MAINTENANCE INSTRUCTIONS

A. As Built Drawings

1. A complete set of reproducible “as-built” drawings showing installed wiring, product addresses, and specific interconnections between all equipment, shall be delivered to the owner upon completion of system.

B. Operating and Instruction Manuals

Three (3) complete sets of operating and instruction manuals, each placed in a 3-ring binder, shall be delivered to the owner upon completion. Each manual shall contain a copy of the as-built fire alarm system drawings. The instruction period for the owner or it's representatives shall be 4 hours, performed during normal business hours.

C. Testing Frequency Instructions

1. Complete, accurate, step-by-step testing instructions giving recommended and required testing frequency of all equipment, methods for testing each individual piece of equipment, and a complete trouble-shooting manual explaining how to test the primary internal parts of each piece of equipment shall be delivered to the owner upon completion of the system.

2. Maintenance instructions shall be complete, easy to read, understandable, and shall provide the following information:

   - Instruction on replacing any components of the system, including internal parts.
   - Instructions on periodic cleaning and adjustment of equipment with a schedule of these functions.

   A complete list of all equipment and components with information as to the address and phone number of both the manufacturer and local supplier of each item.

3. User operating instructions shall be provided, and prominently displayed on the cabinet front or on a separate sheet located next to the fire alarm control unit, in accordance with UL Standard #864.

END OF SECTION 260721

FINAL DRAWINGS
FOR BIDDING

DEMOLITION NOTES

1. REMOVE HEATING HOT WATER SUPPLY AND RETURN PIPING, INSULATION, SUPPORTS, CAP PIPING THAT REMAINS.
2. REMOVE CHILLED WATER SUPPLY AND RETURN PIPING, INSULATION, SUPPORTS, CAP PIPING THAT REMAINS.
3. REMOVE UNIT VENTILATOR, SUPPORTS, CONTROLS, AND ACCESSORIES. COORDINATE DISCONNECT OF POWER TO FAN MOTOR WITH THE WORK OF DIVISION 26 – ELECTRIC.
4. REMOVE RETURN AIR DUCT, INSULATION, GRILLES, SUPPORTS, AND ACCESSORIES. REFER TO ARCHITECTURAL DRAWINGS AND CONSTRUCTION MANAGER'S SCOPE OF WORK FOR WALL RESTORATION DETAILS.
5. REMOVE SUPPLY DUCTWORK, INSULATION, AIR DIFFUSERS, AIR GRILLES, DAMPERS, SUPPORTS, AND ACCESSORIES.
6. REMOVE OUTSIDE AIR DUCT UP THROUGH ROOF, INSULATION, GRAVITY VENTILATOR, CURB, DAMPER, CONTROLS, AND ACCESSORIES. REFER TO ARCHITECTURAL DRAWINGS AND CONSTRUCTION MANAGER'S SCOPE OF WORK FOR ROOF RESTORATION DETAILS.
7. REMOVE RETURN AIR DUCT, INSULATION, REGISTERS, DAMPERS, SUPPORTS, AND ACCESSORIES BACK TO UNIT VENTILATOR CONNECTION.
8. REMOVE TRANSFER GRILLES, DUCT, INSULATION, AND ACCESSORIES. REFER TO ARCHITECTURAL DRAWINGS AND CONSTRUCTION MANAGER'S SCOPE OF WORK FOR WALL RESTORATION DETAILS.
9. REMOVE DUCT MOUNTED ELECTRIC HEATING COIL UNIT, SUPPORTS, CONTROLS, AND ACCESSORIES. COORDINATE DISCONNECT OF POWER TO COIL CONTROL PANEL WITH THE WORK OF DIVISION 26 – ELECTRIC.
10. REMOVE WALL MOUNTED THERMOSTATS, CAP CONTROL AIR OR SAFE OFF WIRING. PROVIDE STAINLESS STEEL COVER PLATE ON FACE OF BACK BOX.
11. REMOVE OUTSIDE AIR DUCT, INSULATION, SUPPORTS, AND ACCESSORIES FROM ROOF PENETRATION BACK TO UNIT VENTILATOR CONNECTION.
12. REMOVE CONDENSATE DRAIN TRAP, DRAIN PIPING TO TERMINATION POINT, INSULATION, SUPPORTS, AND ACCESSORIES.
13. REMOVE CONDENSATE DRAIN OUTLET DOWN TO GRADE, ABANDON DROP IN PARTITION. REFER TO ARCHITECTURAL DRAWINGS AND CONSTRUCTION MANAGER'S SCOPE OF WORK FOR WALL RESTORATION DETAILS.
14. REMOVE RELIEF AIR GRILLES, DUCT, INSULATION, SUPPORTS, FIRE DAMPERS, AND ACCESSORIES. REFER TO ARCHITECTURAL DRAWINGS AND CONSTRUCTION MANAGER'S SCOPE OF WORK FOR WALL RESTORATION DETAILS.
15. REMOVE RELIEF AIR DUCT UP THROUGH ROOF, GRAVITY VENTILATOR, CURB, DAMPER, CONTROLS AND ACCESSORIES. REFER TO ARCHITECTURAL DRAWINGS AND CONSTRUCTION MANAGER'S SCOPE OF WORK FOR ROOF RESTORATION DETAILS.
16. CUT AND CAP BRANCH CHILLED WATER LINES AT MAINS OVER TOILET ROOM. CUT HEATING HOT WATER RUNOUTS, PROVIDE 1-1/4" VALVED OUTLET FOR REUSE ON EACH MAIN.
17. CUT AND CAP BRANCH HEATING HOT WATER AND CHILLED WATER LINES AT MAINS IN CORRIDOR CEILING.
18. REMOVE HEATING HOT WATER AND CHILLED WATER PIPING, INSULATION, SUPPORTS, AND ACCESSORIES.
19. ABANDON BRANCH PIPING IN WALL CAVITY. REFER TO ARCHITECTURAL DRAWINGS AND CONSTRUCTION MANAGER'S SCOPE OF WORK FOR WALL RESTORATION DETAILS.
20. REMOVE CASEWORK, SUPPORTS, AND ACCESSORIES FROM CHASE WALL TO UNIT VENTILATOR. REFER TO ARCHITECTURAL DRAWINGS AND CONSTRUCTION MANAGER'S SCOPE OF WORK FOR WALL AND FLOOR RESTORATION DETAILS.
21. REMOVE UNIT VENTILATOR, SUPPORTS, CONTROLS, AND ACCESSORIES. COORDINATE DISCONNECT OF POWER TO FAN MOTOR WITH THE WORK OF DIVISION 26 – ELECTRIC. REFER TO ARCHITECTURAL DRAWINGS AND CONSTRUCTION MANAGER'S SCOPE OF WORK FOR WALL AND FLOOR RESTORATION DETAILS.
22. REMOVE OUTSIDE AIR GRILLE, FRAME, PLENUM WALL BOX, SUPPORTS, AND ACCESSORIES. REFER TO ARCHITECTURAL DRAWINGS AND CONSTRUCTION MANAGER'S SCOPE OF WORK FOR WALL RESTORATION DETAILS.
23. REMOVE CONDENSATE DRAIN TRAP, PIPING, INSULATION, AND ACCESSORIES. REFER TO ARCHITECTURAL DRAWINGS AND CONSTRUCTION MANAGER'S SCOPE OF WORK FOR WALL RESTORATION DETAILS.
24. REMOVE AIR HANDLING UNIT, SUPPORTS,CONTROLS AND ACCESSORIES. COORDINATE DISCONNECT OF POWER TO FAN MOTOR WITH THE WORK OF DIVISION 26–ELECTRIC.
25. REMOVE DUCT MOUNTED HOT WATER HEATING COIL UNIT, SUPPORTS, CONTROLS, AND ACCESSORIES. REMOVE BRANCH SUPPLY AND RETURN WITH PIPING, INSULATION, VALVES, SUPPORTS, ACCESSORIES AND CAP AT MAINS.

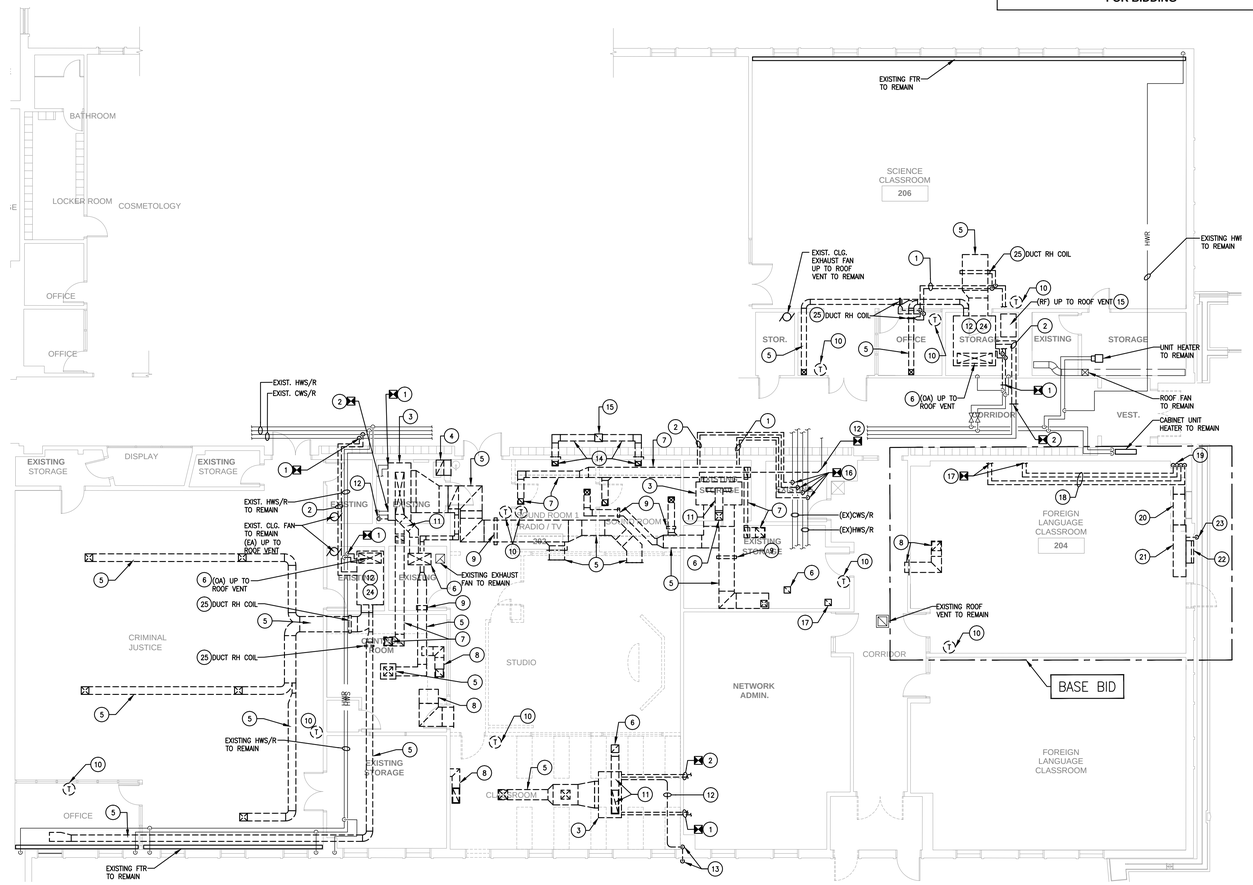

1 FLOOR PLAN MECHANICAL - DEMOLITION - AREA "AR" - ALTERNATE
1/8" = 1'-0"

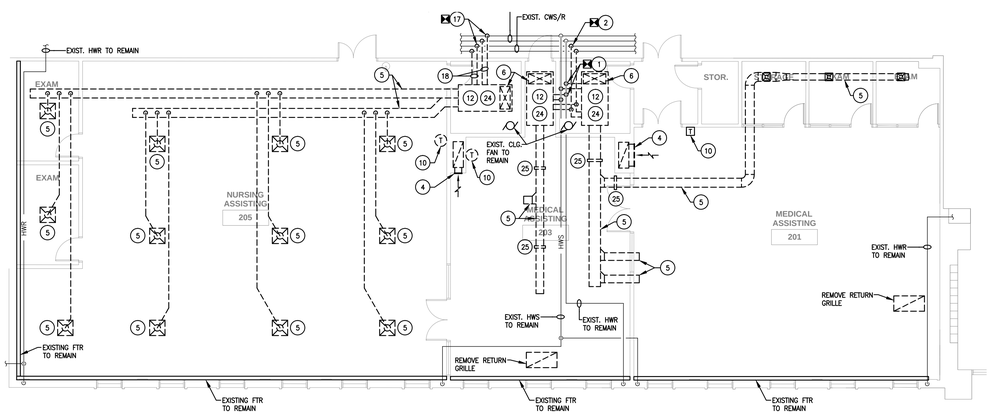

2 FLOOR PLAN MECHANICAL - DEMOLITION - AREA "AM" - ALTERNATE
1/8" = 1'-0"

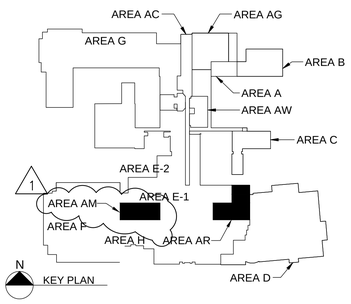

furlow associates
consulting engineers
1206 society drive · claymont, de 19703

NO.	REVISION	DATE
1	ADDENDUM #2	12/04/12

Crabtree, Rohrbaugh & Associates Architects
4811 Jonestown Road, Suite 230
Harrisburg, Pennsylvania 17055
phone: (717) 458-0272 - fax: (717) 458-0047

DELAWARE ARCHITECTS, LLC
550 S. DUPONT BLVD. SUITE E - MILFORD, DE 19963
Office: 302-491-6047 Fax: 302-491-6048

POLYTECH SCHOOL DISTRICT
ADDITIONS AND RENOVATIONS TO POLYTECH HIGH SCHOOL

RADIO / TV & MEDICAL DEMOLITION MECHANICAL

SCALE:	1/8" = 1'-0"
DESIGN BY:	RLL
DRAWN BY:	RLL
CHECKED BY:	SAJ
DALLC FILE:	Project Number
DATE:	08/10/2012

DMA1.3

©COPYRIGHT 2011 DELAWARE ARCHITECTS, LLC

FINAL DRAWINGS
FOR BIDDING

DRAWING NOTES

1. MECHANICAL CONTRACTOR SHALL COORDINATE WITH THE WORK OF THE FIRE ALARM CONTRACTOR TO LOCATE AND INSTALL DUCT SMOKE DETECTORS IN THE SUPPLY AND RETURN AIR DUCTS AS REFERENCED ON THE MECHANICAL DRAWINGS.
2. PROVIDE HEATING COIL CONTROL VALVE AND ACCESSORIES BELOW ROOF DECK IN ACCESSIBLE LOCATION. REFER TO DETAIL DRAWINGS FOR ADDITIONAL WORK.
3. MOUNT RTU ON 14" HIGH ROOF CURB FURNISHED BY UNIT MANUFACTURER. PROVIDE ACOUSTIC PACKAGE WITHIN ROOF CURB AS SHOWN ON DETAIL DRAWINGS.

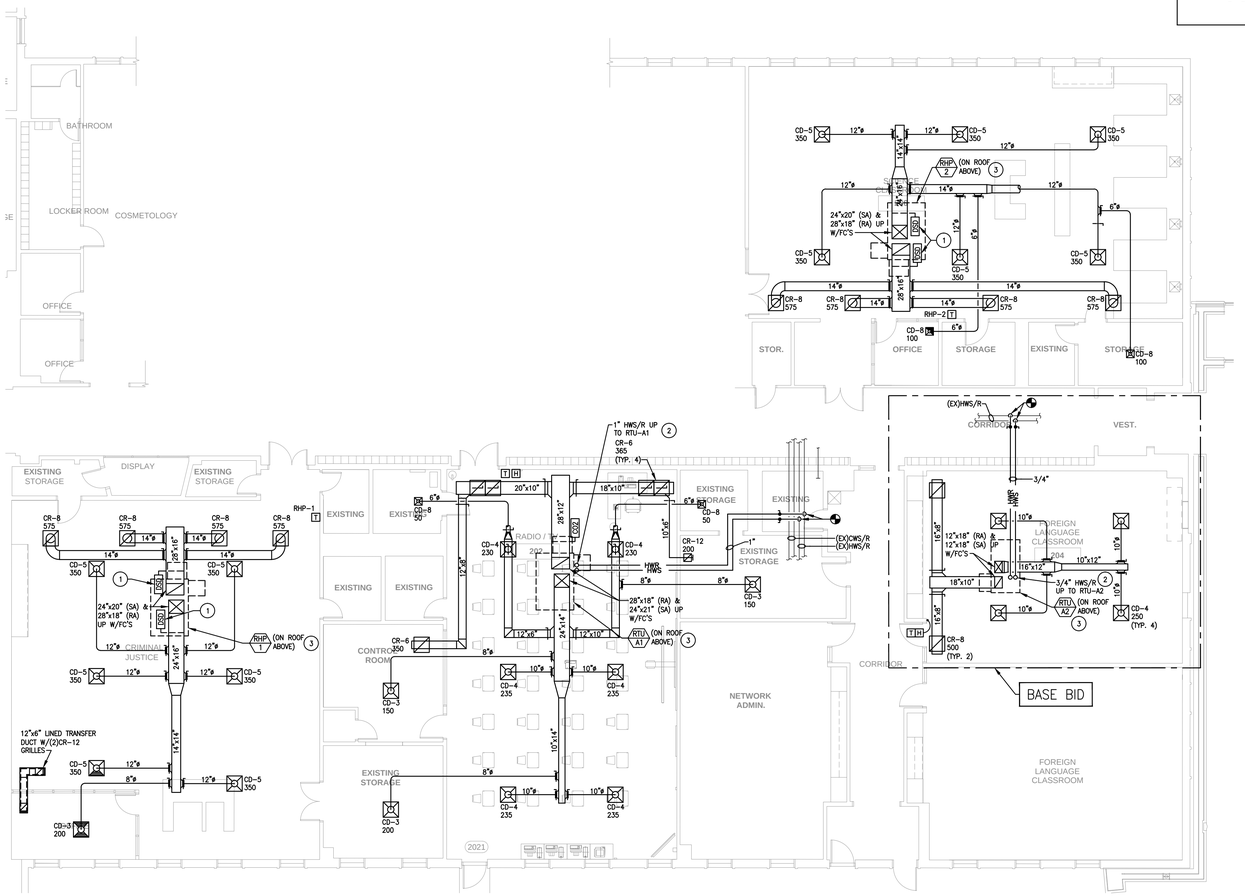

1 FLOOR PLAN MECHANICAL - AREA "AR" - ALTERNATE
1/8" = 1'-0"

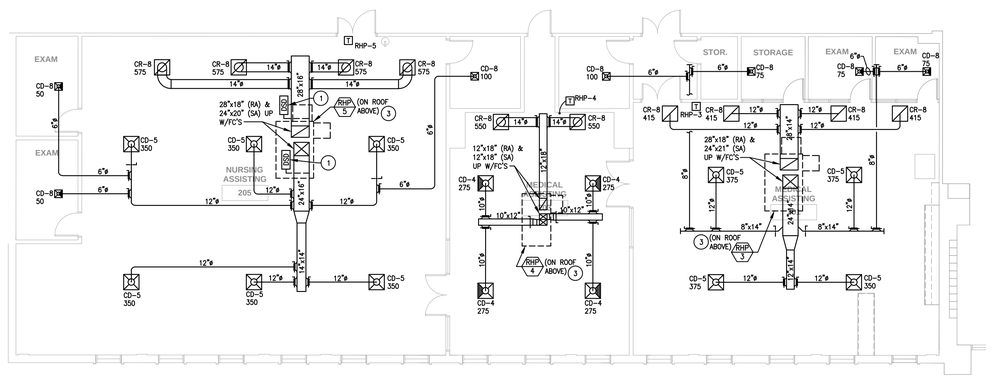

2 FLOOR PLAN MECHANICAL - AREA "AM" - ALTERNATE
1/8" = 1'-0"

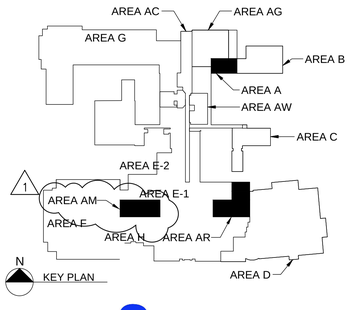

furlow associates
consulting engineers
1206 society drive · claymont, de 19703

NO.	REVISION	DATE
1	ADDENDUM #2	12/04/12

Crabtree, Rohrbaugh & Associates Architects
4811 Jonestown Road, Suite 230
Harrisburg, Pennsylvania 17055
phone: (717) 458-0272 - fax: (717) 458-0047

DELAWARE ARCHITECTS, LLC
550 S. DUPONT BLVD. SUITE E - MILFORD, DE 19963
Office: 302-491-6047 Fax: 302-491-6048

POLYTECH SCHOOL DISTRICT
ADDITIONS AND RENOVATIONS TO POLYTECH HIGH SCHOOL

RADIO / TV & MEDICAL MECHANICAL

SCALE:	1/8" = 1'-0"
DESIGN BY:	RLL
DRAWN BY:	RLL
CHECKED BY:	SAJ
DALLC FILE:	Project Number
DATE:	08/15/2012

MA1.3

COPYRIGHT 2011 DELAWARE ARCHITECTS, LLC

FINAL DRAWINGS
FOR BIDDING

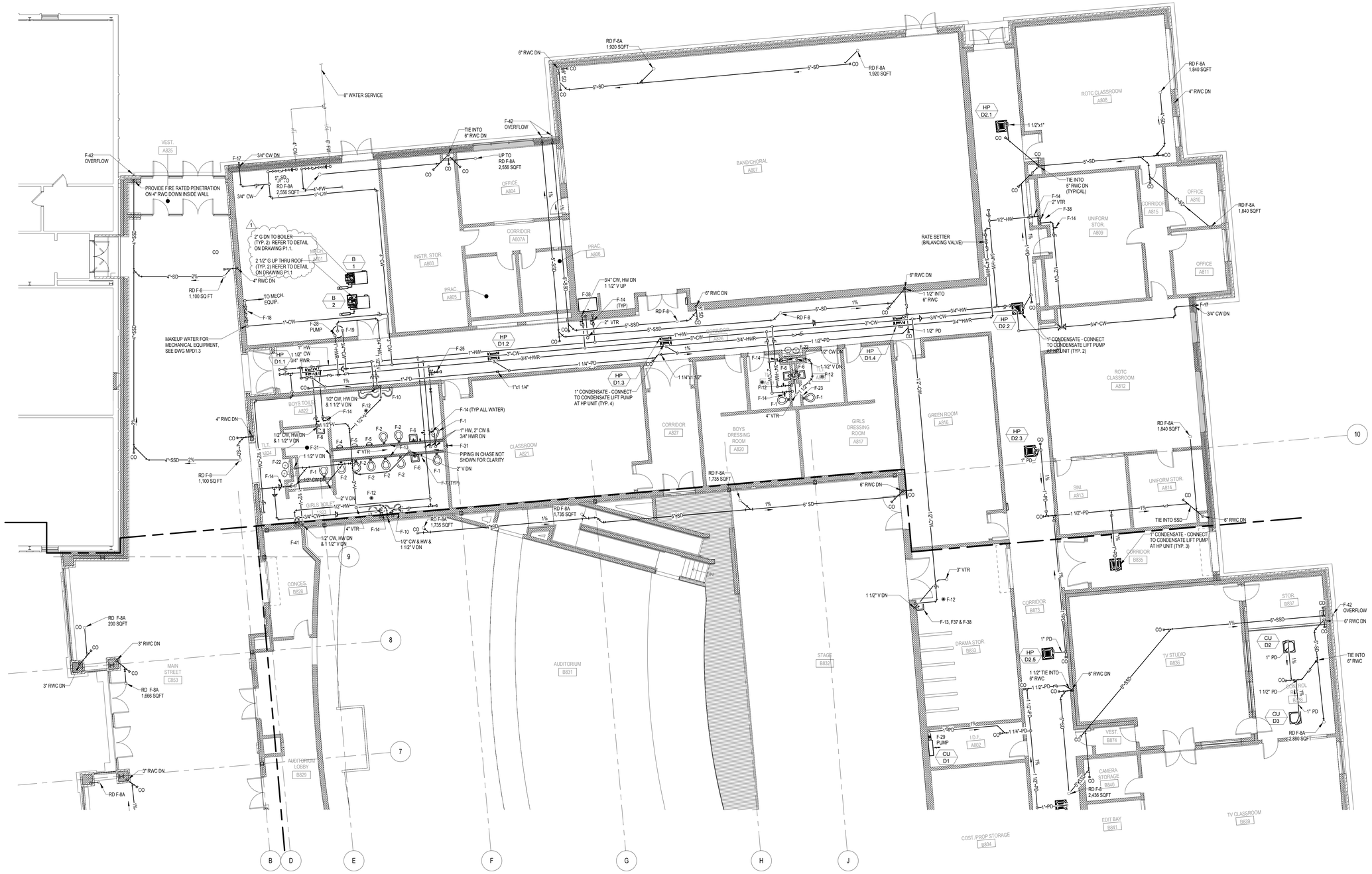

1 PLUMBING PLAN AREA 'A'
1/8" = 1'-0"

DRAWING NOTES: PIPING PLANS

1. SEE DRAWING P1.0 FOR ALL MISCELLANEOUS SYMBOLS, ABBREVIATIONS, AND GENERAL NOTES.

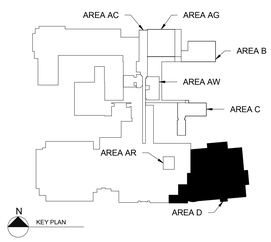

furlow associates
consulting engineers
1200 century drive · cleveland, pa 19343

NO.	REVISION	DATE
1	Addendum #2	12-04-12

Crabtree, Rohrbaugh & Associates Architects
4811 Jonestown Road, Suite 230
Harrisburg Corporate Hill Drive
Mechanicsburg, Pennsylvania 17055
phone: (717) 458-0272 - fax: (717) 458-0047

DELAWARE ARCHITECTS, LLC
550 S. DUPONT BLVD. SUITE E - MILFORD, DE 19963
Office: 302-491-4048 Fax: 302-491-4049

POLYTECH SCHOOL DISTRICT
ADDITIONS AND RENOVATIONS TO POLYTECH HIGH SCHOOL

PLUMBING PLAN AREA 'A'

SCALE:	1/8" = 1'-0"
DESIGN BY:	MLP
DRAWN BY:	MLP
CHECKED BY:	SAJ
DALLC FILE:	
DATE:	08/15/2012

PD1.1

© COPYRIGHT 2011 DELAWARE ARCHITECTS, LLC

FINAL DRAWINGS
FOR BIDDING

DEMOLITION NOTES

1. DEMOLITION DRAWINGS ARE A GUIDE AND INDICATE MAJOR EXISTING ELECTRICAL EQUIPMENT AND DEVICES TO BE REMOVED BUT THE WORK SHALL INCLUDE REMOVAL OF ALL ELECTRICAL SYSTEMS, EQUIPMENT, DEVICES AND WIRING INDICATED ON THESE CONTRACTUAL DRAWING OF THIS PROJECT UNLESS OTHER-WISE NOTED ON THE NEW PLANS TO BE RETAINED OR RETROFITTED. CONTRACTOR SHALL FIELD VERIFY ALL EXISTING CONDITIONS AND SERVICES RELATED TO THE WORK INDICATED. THE SUBMISSION OF AN ELECTRICAL BID SHALL REFLECT THAT THE CONTRACTOR UNDERSTAND THE EXTENT OF THE DEMOLITION WORK. THE FOLLOWING NOTES INDICATE SOME OF THE MAJOR DEMOLITION SCOPE ITEMS.
2. ALL CONDUIT UNDER FLOOR OR CONCEALED IN WALLS NOT BEING REUSED SHALL BE GROUND DOWN 3/8" BELOW SURFACE AND PATCHED / SEALED TO ORIGINAL CONDITION USING SAME MATERIALS AS ORIGINAL CONSTRUCTION.
3. ALL ELECTRICAL EQUIPMENT ASSOCIATED WITH MECHANICAL AND PLUMBING SYSTEMS SHALL BE DISCONNECTED AND REMOVED COMPLETE UNLESS OTHERWISE INDICATED. REFER TO THE NEW PLANS FOR NEW MECHANICAL AND PLUMBING SYSTEMS TO BE POWERED.
4. UPON REMOVAL OF ANY CONDUITS, DEVICES, IN WALLS/FLOORS/ROOF, THE CONTRACTOR SHALL BE RESPONSIBLE FOR PATCHING / SEALING ALL PENETRATIONS. WALL PATCHING SHALL BE RETURNED TO ORIGINAL CONDITION USING SAME MATERIALS AS ORIGINAL CONSTRUCTION.
5. THE CONTRACTOR SHALL REMOVE THE EXISTING DATA JACKS AND CAT 5e WIRING TO POINT OF AND NOT LIMITED TO DISCONNECT / STARTER CONDUIT AND BRANCH CIRCUIT WIRING.
6. THE CONTRACTOR SHALL DISCONNECT EXISTING BOILER EMERGENCY SHUT-OFF SWITCHES COMPLETE TO BOILER CONTROL PANELS AND NOT LIMITED TO CONDUIT AND BRANCH CIRCUIT WIRING.
7. THE CONTRACTOR SHALL REMOVE EXISTING RECEPTACLES COMPLETE TO THE ELECTRIC PANEL INCLUDING BRANCH CIRCUIT WIRING AND CONDUIT.
8. THE CONTRACTOR SHALL REMOVE EXISTING FIRE ALARM AND SECURITY DEVICES INDICATED COMPLETE TO THE FIRE ALARM PANEL/SECURITY PANEL. COORDINATED WITH THE SCHOOL DISTRICT VENDOR, ADVANTECH PRIOR TO REMOVAL.
9. THE CONTRACTOR SHALL DISCONNECT EXISTING FANS COMPLETE TO THE ELECTRIC PANEL INCLUDING BRANCH CIRCUIT WIRING AND CONDUIT.
10. THE CONTRACTOR SHALL DISCONNECT EXISTING H & V UNITS COMPLETE TO SOURCE AND NOT LIMITED TO DISCONNECT / STARTER, CONDUIT AND BRANCH CIRCUIT WIRING.
11. THE CONTRACTOR SHALL REMOVE THE EXISTING LIGHT FIXTURES AND SWITCHES COMPLETE AS INDICATED ON PLANS. RETAIN BRANCH CIRCUIT WIRING FOR RECONNECTION. IN AREAS WHERE THE LIGHT FIXTURES ARE CONNECTED TO POWER TRACK, REMOVE POWER TRACK COMPLETE AND RETAIN BRANCH CIRCUIT WIRING FOR RECONNECTION.
12. THE CONTRACTOR SHALL DISCONNECT THE EXISTING AIR COOLED CONDENSING UNITS TO SOURCE AND NOT LIMITED TO THE DISCONNECT /STARTER, CONDUIT, AND BRANCH CIRCUIT WIRING.
13. THE CONTRACTOR SHALL DISCONNECT AND RETAIN THE BRANCH CIRCUIT WIRING FROM THE EXISTING PATC UNIT. COORDINATE WITH THE MECHANICAL CONTRACTOR FOR THE RELOCATION OF UNIT. CONTRACTOR SHALL RECONFIGURE THE BRANCH CIRCUIT WIRING AND CONDUIT AND EXTEND AS REQUIRED. CIRCUIT EXTENDS FROM PANEL "LA".
14. THE CONTRACTOR SHALL REMOVE EXISTING SURFACE WIREMOLD COMPLETE TO THE ELECTRIC PANEL INCLUDING BRANCH CIRCUIT WIRING AND CONDUIT.
15. THE CONTRACTOR SHALL DISCONNECT THE EXISTING DATA JACKS FROM THE WALL AND RELOCATE TO THE NEW LOCATIONS INDICATED. COORDINATE THE ASSOCIATED WIRING WORK WITH THE SCHOOL DISTRICTS VENDOR, UNDERCOM PRIOR TO RELOCATION OF THE DEVICE BOXES. REFER TO NEW WORK PLANS FOR LOCATIONS OF NEW AND RELOCATED DEVICE BOXES.
16. THE CONTRACTOR SHALL SUPPORT THE EXISTING FIRE ALARM AND SECURITY DEVICES INDICATED FOR REMOVAL OF THE DROP CEILING. COORDINATED WITH THE SCHOOL DISTRICT VENDOR, ADVANTECH PRIOR TO ASSOCIATED WORK.
17. THE CONTRACTOR SHALL SUPPORT THE EXISTING SPEAKERS INDICATED FOR REMOVAL OF THE DROP CEILING. COORDINATED WITH THE SCHOOL DISTRICT VENDOR, COLLINS BUSINESS MACHINES PRIOR TO ASSOCIATED WORK.
18. THE CONTRACTOR SHALL REMOVE THE EXISTING SURFACE MOUNTED ELECTRIC PANELS COMPLETE INCLUDING BRANCH CIRCUIT WIRING AND CONDUIT.
19. THE CONTRACTOR SHALL REMOVE THE EXISTING SURFACE MOUNTED 15 KVA WALL MOUNTED TRANSFORMER COMPLETE INCLUDING BRANCH CIRCUIT WIRING, AND DISCONNECT SWITCH.
20. THE CONTRACTOR SHALL DISCONNECT THE FEEDER TO PANEL "EM", SAFE OFF, AND RETAIN FOR EXTENSION TO THE ENVIRONMENTAL SCIENCE BUILDING. REFER TO NEW WORK FOR ASSOCIATED WORK.
21. THE CONTRACTOR SHALL DISCONNECT AND RETAIN THE EXISTING 75 KVA TRANSFORMER. CONTRACTOR SHALL BE RESPONSIBLE FOR STORAGE OF TRANSFORMER DURING DEMOLITION. REFER TO NEW WORK DRAWINGS FOR NEW LOCATION AND ASSOCIATED CONNECTION INFORMATION.
22. THE CONTRACTOR SHALL DISCONNECT AND RETAIN THE BRANCH CIRCUIT WIRING FOR THE WALK-IN REFRIGERATOR. REMOVE DISCONNECT SWITCH AND BRANCH CIRCUIT WIRING TO PANEL COMPLETE. REFER TO NEW WORK DRAWINGS FOR NEW LOCATION AND ASSOCIATED CONNECTION INFORMATION.
23. THE EXISTING NOTIFIER FIRE ALARM SYSTEM SHALL REMAIN. IT SHALL BE THE RESPONSIBILITY OF THE E.C. SUPPORT THE DEVICES FOR REMOVAL OF CEILING AND PROVIDE DUST COVERS TO THE SMOKE DETECTORS IN THE AREA OF DEMOLITION. THE E.C. SHALL COORDINATE THIS WORK WITH THE FIRE ALARM SYSTEM VENDOR, DENNIS GERBER OF KRATOS AT 302-992-7950 EXT. 104. FIRE ALARM DEVICES REQUIRED TO BE DISCONNECTED FROM THE BASE SHALL BE RECERTIFIED UPON REINSTALLATION.
24. CONTRACTOR SHALL SUPPORT THE 2' X 4' MOUNTING PLATE FOR THE PROJECTOR AND THE RECEPTACLE FOR REMOVAL OF THE DROP CEILING TO COMPLETE THE NEW MECHANICAL WORK. REFER TO THE NEW WORK PLAN FOR REINSTALLATION.
25. RECEPTACLES MOUNTED IN THE CLASSROOM CEILING SHALL BE SUPPORTED TO THE STEEL STRUCTURE FOR REMOVAL OF THE DROP CEILING TO COMPLETE THE NEW MECHANICAL WORK. THIS WORK SHALL NOT BE LIMITED TO CABLING, RACEWAYS, ETC.
26. THE CONTRACTOR SHALL REMOVE THE EXISTING RECESSED CLOCK AND BACK BOX COMPLETE INCLUDING ALL WIRING ASSOCIATED WITH THE CLOCK AND SPEAKER SYSTEM.

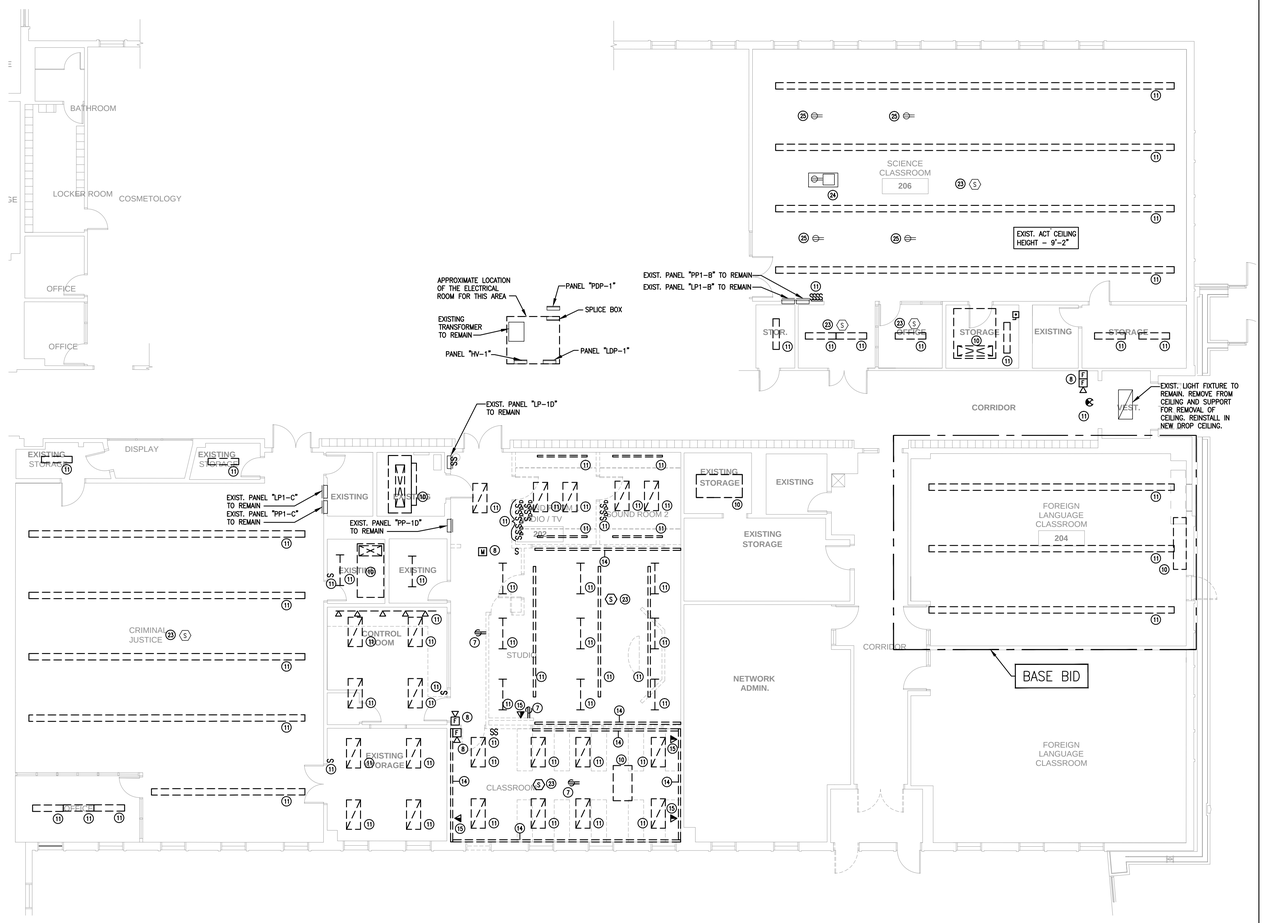

1 FLOOR PLAN ELECTRICAL - DEMOLITION - AREA "AR" - ALTERNATE
1/8" = 1'-0"

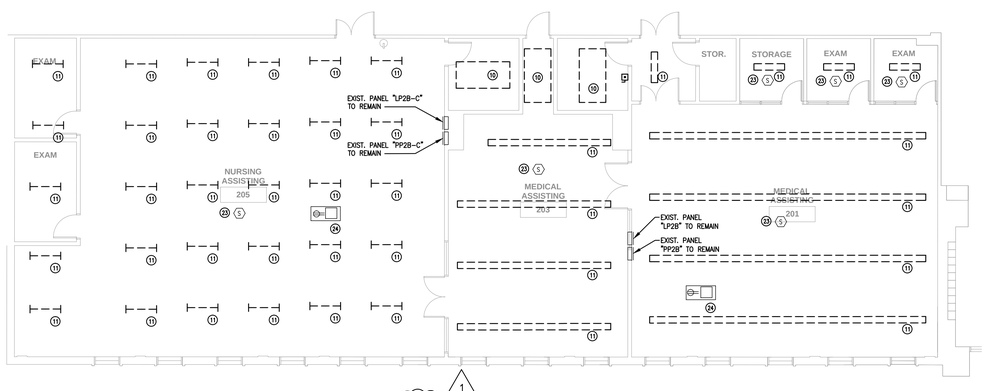

2 FLOOR PLAN ELECTRICAL - DEMOLITION - AREA "AM" ALTERNATE

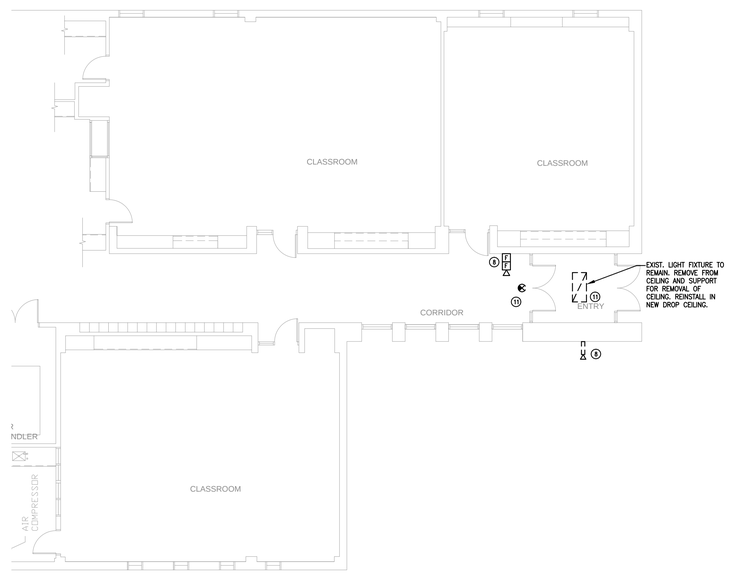

3 FLOOR PLAN ELECTRICAL - DEMOLITION - AREA "AR" BASE BID
1/8" = 1'-0"

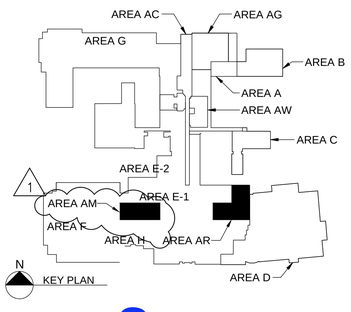

furlow associates
consulting engineers
1206 society drive · claymont, de 19703

NO.	REVISION	DATE
1	ADDENDUM #2	12/04/12

Crabtree, Rohrbaugh & Associates Architects
Mechanicsburg, Pennsylvania 17055
phone: (717) 458-0272 - fax: (717) 458-0047

DELAWARE ARCHITECTS, LLC
550 S. DUPONT BLVD. SUITE E - MILFORD, DE 19963
Office: 302-491-6047 Fax: 302-491-6048

POLYTECH SCHOOL DISTRICT
ADDITIONS AND RENOVATIONS TO POLYTECH HIGH SCHOOL

RADIO / TV & MEDICAL DEMOLITION ELECTRICAL

SCALE:	1/8" = 1'-0"
DESIGN BY:	WJS
DRAWN BY:	WJS
CHECKED BY:	SAJ
DALLC FILE:	Project Number
DATE:	08/15/2012

DEA1.3

©COPYRIGHT 2011 DELAWARE ARCHITECTS, LLC

FIXTURE SCHEDULE

NOTES:

1. EQUIVALENT MANUFACTURERS: FIXTURES BY MANUFACTURERS LISTED AS EQUIVALENTS SHALL BE OF THE SAME TYPE, PERFORMANCE AND QUALITY OF THOSE SPECIFIED. EQUIVALENT MANUFACTURERS MUST MEET ALL CRITERIA OF THE BASE FIXTURE SPECIFIED. ANY DEVIATIONS WHICH DO NOT REFLECT THE BASE FIXTURE MAY RESULT IN A REJECTED SHOP DRAWING (DURING SUBMITTAL PERIOD). LISTED EQUIVALENTS DO NOT AUTOMATICALLY MEAN APPROVED. NO SUBSTITUTES ARE TO BE MADE WITHOUT PRIOR APPROVAL. REQUEST FOR SUBSTITUTIONS SHALL BE SUBMITTED IN ACCORDANCE WITH THE SPECIFICATIONS.
2. BODINE GTD – GENERATOR TRANSFER DEVICE SHALL BE INSTALLED IN SHADED FIXTURES ONLY. ELECTRICAL CONTRACTOR SHALL FURNISH AND INSTALL A 277 VOLT CIRCUIT FROM LOCAL EMERGENCY PANEL TO THE BODINE GTD – GENERATOR TRANSFER DEVICE LOCATED IN FIXTURE INDICATED. ALL OTHER FIXTURES LABELED WITH THE SAME TAG SHALL BE CONNECTED TO THE NORMAL POWER CIRCUIT INDICATED.

TYPE: "A"
MFGR.: COLUMBIA
CAT. #: ZPT 24-2-28-G-FCBS-EPU
LAMPS: (2) 28W T5HO, 3500°K
MOUNTING: RECESSED, CEILING
EQUIV. MFGRS.: DAY-O-LIGHT
REMARKS: 2' X 4' ZERO PLENUM TROFFER, DIE-FORMED COLD ROLLED STEEL HOUSING, FLUSHED CURVED BAFFLE, BAKED WHITE POLYESTER FINISH, NEC COMPLIANT BALLAST DISCONNECT, 277 VOLT ELECTRONIC BALLAST. DUE TO HEIGHT RESTRICTIONS THE FIXTURE SHALL NOT EXCEED 2 1/2" IN HEIGHT ABOVE CEILING GRID RAIL.

TYPE: "A1"
MFGR.: COLUMBIA
CAT. #: ZPT 24-2-28-G-FCBS-EPU
LAMPS: (2) 28W T5, 3500°K
MOUNTING: RECESSED, CEILING
EQUIV. MFGRS.: DAY-O-LITE
REMARKS: 2' X 4' ZERO PLENUM TROFFER, DIE-FORMED COLD ROLLED STEEL HOUSING, FLUSHED CURVED BAFFLE, BAKED WHITE POLYESTER FINISH, NEC COMPLIANT BALLAST DISCONNECT, 277 VOLT ELECTRONIC BALLAST (SYLVANIA – QUCKTRONIC POWERSENSE T5 DIMMING UNV SYSTEMS). DUE TO HEIGHT RESTRICTIONS THE FIXTURE SHALL NOT EXCEED 2 1/2" IN HEIGHT ABOVE CEILING GRID RAIL.

TYPE: "A2"
MFGR.: COLUMBIA
CAT. #: ZPT 24-2-54-G-FCBS-EPU
LAMPS: (2) 54W T5, 3500°K
MOUNTING: RECESSED, CEILING
EQUIV. MFGRS.: DAY-O-LITE
REMARKS: 2' X 4' ZERO PLENUM TROFFER, DIE-FORMED COLD ROLLED STEEL HOUSING, FLUSHED CURVED BAFFLE, BAKED WHITE POLYESTER FINISH, NEC COMPLIANT BALLAST DISCONNECT, 277 VOLT ELECTRONIC BALLAST.

TYPE: "B"
MFGR.: COLUMBIA
CAT. #: ZPT 22-2-14-G-FCBO-EPU
LAMPS: (2) 14W T5, 3500°K
MOUNTING: RECESSED, CEILING
EQUIV. MFGRS.: DAY-O-LITE
REMARKS: 2' X 2' ZERO PLENUM TROFFER, DIE-FORMED COLD ROLLED STEEL HOUSING, FLUSHED CURVED BAFFLE, BAKED WHITE POLYESTER FINISH, NEC COMPLIANT BALLAST DISCONNECT, 277 VOLT ELECTRONIC BALLAST. DUE TO HEIGHT RESTRICTIONS THE FIXTURE SHALL NOT EXCEED 2 1/2" IN HEIGHT ABOVE CEILING GRID RAIL.

TYPE: "C"
MFGR.: DAY-BRIGHT LIGHTING
CAT. #: HCF642//CU-D6 AR22CF WGA22
LAMPS: (6) 42W T8, 3500K
MOUNTING: SURFACE CEILING
EQUIV. MFGRS.: METALUX, HUBBELL
REMARKS: 22 1/4" DIAMETER COMPACT FLUORESCENT HIGH BAY FIXTURE WITH CAST ALUMINUM HOUSING AND LID, POLYCARBONATE PRISMATIC DOME, (4) ELECRONTIC BALLASTS FOR 4 LEVEL SWITCHING, PREMIUM ARCHITECTURALLY SELECTED FINISH, 277V.

TYPE: "D"
MFGR.: COOPER LIGHTING
CAT. #: S76PF-2T5-XX-2EB-SI
LAMPS: (2) 28 WATT T-5 LAMPS, 3500K
MOUNTING: RECESSED CEILING
EQUIV. MFGRS.: PRESCOLITE, LITHONIA, DAY-O-LITE
REMARKS: PARABOLIC BAFFLE PERIMETER LIGHTING SYSTEM PROVIDE WALL WASH LIGHTING, STEEL HOUSING, WHITE BOLD BAFFLE WITH SEMI-SPECULAR ALUMINUM PARABOLIC BAFFLE, STAGGERED LAMPS, 277V ELECTRONIC BALLAST.

TYPE: "E"
MFGR.: DUALLITE
CAT. #: LXURWEI
LAMPS: FURNISHED W/FIXTURE
MOUNTING: UNIVERSAL MOUNTED
EQUIV. MFGRS.: PRESCOLITE, LITHONIA, EVENLITE
REMARKS: UNIVERSAL SINGLE/DOUBLE FACE EXIT SIGN WITH EVEN ILLUMINATED LEDS, WHITE THERMOPLASTIC HOUSING, RED LETTERS, DIRECTIONAL ARROWS, HINGED FACE PLATE, NICKLE-CADMIUM BATTERY WITH FULL AUTO CHARGING, 277V.

TYPE: "E1"
MFGR.: DUALLITE
CAT. #: SEWLSRWE-HTR-4X
LAMPS: FURNISHED W/FIXTURE
MOUNTING: UNIVERSAL MOUNTED
EQUIV. MFGRS.: PRESCOLITE, LITHONIA, EVENLITE
REMARKS: SINGLE FACE EXIT SIGN WITH EVEN ILLUMINATED LEDS, GASKETED DIE-CAST ALUMINUM HOUSING, RED LETTERS, WHITE HOUSING, DIE-CAST ALUMINUM CANOPY, DIRECTIONAL ARROWS, HINGED FACE PLATE, POLYCARBONATE VANDEL SHIELD, INTERNAL HEATER, NEMA 4X RATING, NICKLE-CADMIUM BATTERY WITH FULL AUTO CHARGING, 120V.

TYPE: "E2"
MFGR.: DUALLITE
CAT. #: LTURWI
LAMPS: FURNISHED W/FIXTURE
MOUNTING: UNIVERSAL MOUNTED
EQUIV. MFGRS.: PRESCOLITE, LITHONIA, EVENLITE
REMARKS: UNIVERSAL SINGLE/DOUBLE FACE COMBINATION EXIT SIGN AND EMERGENCY LIGHTING UNIT WITH 5 WATT HALOGEN LAMPS, WHITE THERMOPLASTIC HOUSING, RED LETTERS, DIRECTIONAL ARROWS, HINGED FACE PLATE, NICKLE-CADMIUM BATTERY WITH FULL AUTO CHARGING, 277V.

TYPE: "F"
MFGR.: COLUMBIA
CAT. #: 4PS24-328G-FAA12.125-EPU-F5835
LAMPS: (2) 28W T5, 3500K
MOUNTING: RECESSED CEILING
EQUIV. MFGRS.: METALUX, COOPER LIGHTING, DAYBRITE
REMARKS: 2' X 4' RECESSED TROFFER, FORMED STEEL HOUSING, FLUSH ALUMINUM DOOR, PATTERN 12 ACRYLIC LENSE 0.125" NOMINAL, UNIVERSAL VOLTAGE ELECTRONIC BALLAST.

TYPE: "F1"
MFGR.: COLUMBIA
CAT. #: 4PS22-214G-FAA12.125-EPU-F5835
LAMPS: (2) 14W T5, 3500K
MOUNTING: RECESSED CEILING
EQUIV. MFGRS.: METALUX, COOPER LIGHTING, DAYBRITE
REMARKS: 2' X 2' RECESSED TROFFER, FORMED STEEL HOUSING, FLUSH ALUMINUM DOOR, PATTERN 12 ACRYLIC LENSE 0.125" NOMINAL, UNIVERSAL VOLTAGE ELECTRONIC BALLAST.

TYPE: "G"
MFGR.: METALUX
CAT. #: DI-232-277-EB81
LAMPS: (2) 32 WATT T-8 (3500K)
MOUNTING: SURFACE MOUNT
EQUIV. MFGRS.: COLUMBIA, LITHONIA, DAYBRITE
REMARKS: 13 1/2" WIDE X 4' LONG INDUSTRIAL FLUORESCENT FIXTURE WITH COLD ROLLED STEEL HOUSING, DIE FORMED CHANNELS, HEAVY DUTY APERTURE REFLECTOR, PRESSURE LOCK LAMP HOLDERS, BAKED WHITE ENAMEL FINISH, (1) 2-LAMP ELECTRONIC BALLAST, 277V.

TYPE: "H"
MFGR.: DAY-BRITE (NITE BRITES)
CAT. #: BIS18WLXX-BLA-GEC-GU-GY
LAMPS: LED
MOUNTING: PENDANT, CEILING
EQUIV. MFGRS.: CANLITE, HUBBELL
REMARKS: 18 WATT LED VAPOR TIGHT FIXTURE WITH CLEAR GLOBE AND GUARD, 120 VOLT DRIVER.

TYPE: TYPE "I"
MFGR.: NOT USED

TYPE: "J"
MFGR.: COOPER LIGHTING
CAT. #: LDWP-FC-4A-ED-BK/PE/EMLED-CD
LAMPS: LED
MOUNTING: SURFACE WALL
EQUIV. MFGRS.: COLUMBIA, HUBBELL, LITHONIA, DAYBRITE
REMARKS: 40 LED FULL CUT OFF WALL LUMINAIRE, TWO PIECE DIE-CAST ALUMINUM HOUSING, DIE-CAST WITH CLEAR TEMPERED GLASS LENS.

TYPE: "K"
MFGR.: COOPER LIGHTING
CAT. #: AIM-100-MH-277-SG16-W-I-P-XX
LAMPS: (1) 100 WATT METAL HALIDE LAMP
MOUNTING: PENDANT CEILING
EQUIV. MFGRS.: PATHWAY LIGHTING, ABOLITE, HI-LITE
REMARKS: AVID SERIES PENDANT MOUNTED FIXTURE WITH INTEGRAL BALLAST HOUSING, CAST ALUMINUM MIDSECTION, FIELD ADJUSTABLE SOCKET BRACKET WITH MULTI SETTING FOR THE OPTICAL SYSTEM, WITH CAST ALUMINUM TOP WITH A 1/2" PIPE FOR PENDANT MOUNTING. COLOR SELECTION BY ARCHITECT.

TYPE: "K1"
MFGR.: COOPER LIGHTING
CAT. #: AIM-100-MH-277-SG16-W-I-P-XX-EM/SC
LAMPS: (1) 100 WATT METAL HALIDE LAMP
MOUNTING: PENDANT CEILING
EQUIV. MFGRS.: PATHWAY LIGHTING, ABOLITE, HI-LITE
REMARKS: SAME AS TYPE 'T' WITH EMERGENCY SEPARATE CIRCUIT WIRING.

GENERAL LIGHTING NOTES:

1. ALL FIXTURE COLORS SHALL BE VERIFIED WITH ARCHITECT PRIOR TO APPROVAL OF SHOP DRAWINGS.
2. ELECTRICAL CONTRACTOR SHALL PROVIDE PRICING IN BASE BID TO FURNISH, INSTALL AND WIRE 10 EXTRA TYPE "E" FIXTURES. THESE FIXTURES SHALL BE INSTALLED AS REQUIRED FOR THE FIRE MARSHAL'S OFFICE. SHOULD NONE BE REQUIRED, TURN ALL OR REMAINING FIXTURES OVER TO OWNER AS "ATTIC STOCK".

TYPE: "L"
MFGR.: BRUCK LIGHTING
CAT. #: 222-151-MC-MP
LAMPS: LED 3 WATT
MOUNTING: PENDANT
EQUIV. MFGRS.: TECH LIGHTING, PRIMA
REMARKS: ZARAE PENDANT, STANDARD CABLE 59" FIELD-CUT TO DESIERED LENGTH, WHIDE SHADE, MATTE CROM FINISH, 4" KISS CANOPY.

TYPE: "M"
MFGR.: CREE LIGHTING
CAT. #: ESAC10P56DUBKSSGC7003500
LAMPS: 56 LED ARRAY
MOUNTING: PENDANT
EQUIV. MFGRS.: PRESCOLITE, OCEAN STATE LIGHTING
REMARKS: ARCHITECTURAL 10" DIAMETER CYLINDER DOWNLIGHT, 6" AXIAL AND TILTED AXIAL OPTIC ON EACH LED, WIDE DISTRIBUTION BEAM SPREAD, EXTRUDED ALUMINUM HEAT SINK, ALUMINUM HOUSING,

TYPE: "N"
MFGR.: PROGRESS LIGHTING
CAT. #: P3070-15
LAMPS: (8) 60 WATT INCANDESCANT G-LAMPS
MOUNTING: SURFACE WALL
EQUIV. MFGRS.: KITCHLER
REMARKS: BROADWAY LIGHTS, MIRRORED GLASS POLISHED CHROME BACK, SOCKETS ON 7 1/2" CENTERS, MEDIUM BASED G-LAMP, MEASURES 60 1/2" LONG X 4 3/4" HIGH, FIXTURE HOLDS (8) MEDIUM BASE G-LAMPS, AT 60 WATTS EACH, 120 VOLT OPERATION.

TYPE: "N1"
MFGR.: PROGRESS LIGHTING
CAT. #: P3069-15
LAMPS: (8) 60 WATT INCANDESCANT G-LAMPS
MOUNTING: SURFACE WALL
EQUIV. MFGRS.: KITCHLER
REMARKS: BROADWAY LIGHTS, MIRRORED GLASS POLISHED CHROME BACK, SOCKETS ON 7 1/2" CENTERS, MEDIUM BASED G-LAMP, MEASURES 48 1/2" LONG X 4 3/4" HIGH, FIXTURE HOLDS (8) MEDIUM BASE G-LAMPS, AT 60 WATTS EACH, 120 VOLT OPERATION.

TYPE: TYPE "O"
MFGR.: NOT USED

TYPE: "P"
MFGR.: RUUD LIGHTING
CAT. #: INT-EDR-40-PD-04-D-UL-WH-350-TL1
LAMPS: LED LAMPS
MOUNTING: PENDANT CEILING
EQUIV. MFGRS.: HUBBELL, LITHONIA
REMARKS: THE EDGE LED INTERIOR ROUND LIGHT – 40° FLOOD, CAST ALUMINUM HOUSING, LED DRIVER, SPUM ALUMIMUM COVER WITH HEAT SINKS, FIXTURE MOUNTED FROM 3/8" IP PENDANT (COORDINATED FINAL ELEVATION WITH ARCHITECT).

TYPE: "Q"
MFGR.: SELUX CORPORATION
CAT. #: SA90-MR-Q26-XX-277
LAMPS: (2) 26 WATT QUAD FLOUORESCENT LAMPS
MOUNTING: SURFACE WALL
EQUIV. MFGRS.: AAL LIGHTING, LOUIS POULSEN
REMARKS: DECORATIVE WALL MOUNTED LUMINARIE, DIE-CAST ALUMINUM COVERS, FORMED ALUMINUM SHADES, INJECTED MOLDED ACRYLIC MULTI-PRISMS, ALUMINUM SUPPORT RODS, CAST ALUMINUM WALL ARM MOUNTS, AND EXTRUDED ALUMINUM COLUMN. (COORDINATED FINAL ELEVATION WITH ARCHITECT).

TYPE: "R"
MFGR.: PHILIPS LIGHTING (OMEGA)
CAT. #: OM6LED27277-R6LED35WDCSS
LAMPS: LED LAMPS
MOUNTING: RECESSED CEILING
EQUIV. MFGRS.: COOPER LIGHTING, LITHONIA, PRESCOLITE
REMARKS: 6" LED RECESSED WIDER BEAM DOWNLIGHT, LED ARRAY, DIE CAST ALUMINUM 1 1/2" DEEP COLLAR, UNIVERSAL MOUNTING BRACKET, 277 VOLT OPERATION.

TYPE: "R1"
MFGR.: PHILIPS LIGHTING (OMEGA)
CAT. #: OM6LED27120-R6LED35WDCSS
LAMPS: LED LAMPS
MOUNTING: RECESSED CEILING
EQUIV. MFGRS.: COOPER LIGHTING, LITHONIA, PRESCOLITE
REMARKS: SAME AS TYPE 'R' EXCEPT 120 VOLT OPERATION.

TYPE: "S"
REMARKS: EXISTING FIXTURE REINSTALLED ON NEW BASE

TYPE: "S1"
MFGR.: COOPER LIGHTING
CAT. #: OVG-25-M-C-8-3-D-L
LAMPS: (1) 250 WATT MEDAL HALIDE
MOUNTING: 25'-0" POLE RTA8L25AAS16
EQUIV. MFGRS.: SPAULDING, LITHONIA, PAL
REMARKS: DIE-CAST ALUMINUM HOUSING, REMOVABLE LOW PROFILE GLASS LENS, HYDROFORMED ANODIZED ALUMINUM REFRACTOR, STANDARD GRAY POLYESTER POWDER COAT FINISH, MOUNT ON 25'-0" H X 6" ROUND STEEL POLE WITH DARK PLATINUM FINISH, TYPE III DISTRIBUTION, HPF BALLAST, 480V. POLE SHALL BE GRAY POLYESTER POWDER COAT FINISH, 25'-0" TALL WITH ROUND SINGLE ELLIPTICAL ARM.

TYPE: "S2"
MFGR.: COOPER LIGHTING
CAT. #: OVG-25-M-C-8-3-D-L
LAMPS: (2) 250 WATT MEDAL HALIDE
MOUNTING: 25'-0" POLE RTA8L25AA26
EQUIV. MFGRS.: SPAULDING, LITHONIA, PAL
REMARKS: SIMILAR TO TYPE "S1" EXCEPT WITH TWO FIXTURES MOUNTED ON A COMMON POLE 180°. POLE SHALL BE GRAY POLYESTER POWDER COAT FINISH, 25'-0" TALL WITH ROUND TWIN ELLIPTICAL ARM.

TYPE: "T"
MFGR.: LSI INDUSTRIES
CAT. #: LS-F-N-FP-150-MH-F-MT-XXX-SQN/CC-D1804 S10G-12'-GA. (2)
LAMPS: (1) 150 WATT METAL HALIDE LAMP
MOUNTING: PENDANT POLE
EQUIV. MFGRS.: LUMEC LIGHTING, KIM LIGHTING
REMARKS: DECORATIVE EXTERIOR LIGHTING FIXTURE WITH DIE CAST ALUMINUM SHADE AND CROWN, NON-LUMINOUS TRANSITIONS, EXTRUDED AND CAST ALUMINUM BRACKETS, FLAT TEMPERED GLASS LENS, TYPE FORWARD THROW OPTICS, METAL HALIDE LAMP.

TYPE: "U"
MFGR.: HYDREL
CAT. #: M9810A-250ME-277-MFL-FLC-34S-LP-DNA
LAMPS: (1) 250 WATT METAL HALIDE
MOUNTING: RECESSED, GROUND
EQUIV. MFGRS.: COOPER, KIM, LSI, BRONZELITE
REMARKS: INGRADE UPLIGHT, POLYMER CYLINDER WITH INTEGRAL JUNCTION BOX, ADJUSTMENT RING 360° AIM ROTATION AND LOCK, POLYCARBONATE COVER, 277 VOLT ELECTRONIC BALLAST. FIXTURES LOCATED ON DRAWING E-300.

TYPE: "V"
MFGR.: KENALL
CAT. #: RCA41/1228RS11/G2WLPF
LAMPS: (2) 28W T5, 3500K
MOUNTING: RECESSED CEILING
EQUIV. MFGRS.: MORLITE
REMARKS: 1' X 4' RECESSED TROFFER, DIE FORMED FORMED STEEL HOUSING, DIE FORMED FORMED STEEL DOOR, PATTERN 12 ACRYLIC INNER LENSE 0.125" NOMINAL, CLEAR POLYCARBONATE OUTER LENSE 0.125" NOMINAL, PLASTER FROM MOUNT, UNIVERSAL VOLTAGE ELECTRONIC BALLAST, WET LOCATION LISTED.

TYPE: "W"
MFGR.: COOPER LIGHTING (NEO-RAY)
CAT. #: 6DIP1X2T5ST122EBSIEMS14
LAMPS: (3) 28W T5, 3500K PER 4'-0" SECTION
MOUNTING: PENDANT CEILING
EQUIV. MFGRS.: LITHONIA, ALERA, DAY-O-LITE
REMARKS: 6" DIAMETER TUBE FIXTURE, EXTRUDED ALUMINUM HOUSING, DIE CAST ALUMINUM END CAPS, CONTOURED BAFFLE SHIELDING, PENDANT MOUNT, ELECTRONIC BALLAST, AND EMERGENCY PACK.

TYPE: "X"
MFGR.: ALCKO LIGHTING
CAT. #: ARIS-41-301-120-PRL-AMB41
LAMPS: 20 LED LAMPS PER 4'-0" SECTION
MOUNTING: SURFACE WALL
EQUIV. MFGRS.: LITHONIA, COOPER LIGHTING, I2
REMARKS: LOW PROFILE LED DISPLAY CASE LIGHT FIXTURE, EXTRUDED ALUMINUM HOUSING, POLYCARBONATE END CAPS, EXTRUDED CLEAR POLYCARBONATE LENS, 120 VOLT OPERATION.

TYPE: "Y"
MFGR.: TEMPO INDUSTRIES
CAT. #: 2012 BK 1 XXT LED LAMPS
LAMPS: SURFACE FLOOR
MOUNTING: WEDIMARK LIGHTING, CELESTIA LIGHTING, TIVOLI
EQUIV. MFGRS.: GUARDIAN SERIES 2000 LED PATHWAY LIGHTING FOR CARPET TO
REMARKS: FLOOR AISLE LIGHTING, SPOOLED ROOLS, PARAEL WIRING UTLIZING CLASS 2 POWER SUPPLY WHICH ALLOWES EACH LIGHT TO OPERATE INDEPENTLY, FIELD CUTTABLE AND LAYOUT. XX EQUALS LED LIGHT COLOR SELECTED BY ARCHITECT. FIXTURES ARE LOCATED ON DRAWING EPD1.2.

NOTES FOR TRANSFORMER PAD:

1) CONCRETE SHALL HAVE A MIN. 28 DAY COMPRESSIVE STRENGTH OR 3,000 PSI AND SHALL CONTAIN 3% TO 6% ENTRAINED AIR BY VOLUME.
2) RODS SHALL BE No. 4 BAR AND CONFORM TO THE LATEST REVISION OF ASTM A-615, GR. 50. BARS TO FORM 6" x 6" MAT.
3) PAD SHALL BE SET ON A 6" THK. CRUSHED STONE (MAX STONE SIZE SHALL
4) THE SOIL BENEATH THE CRUSHED STONE SHALL BE WELL COMPACTED.

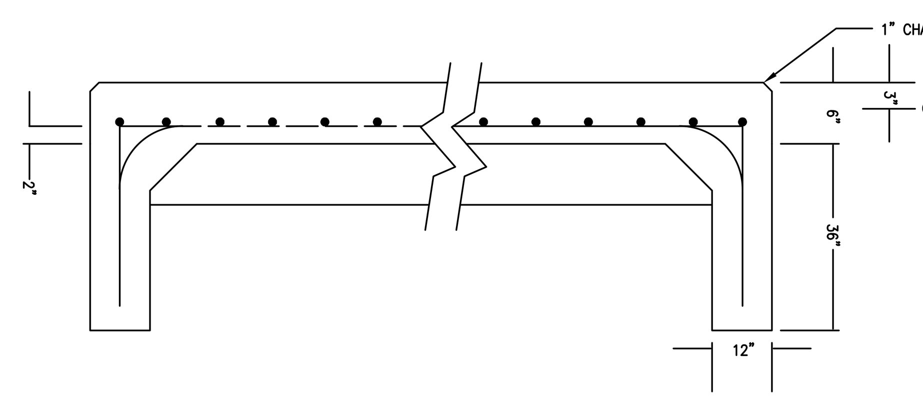

TRANSFORMER PAD DETAIL

NOT TO SCALE

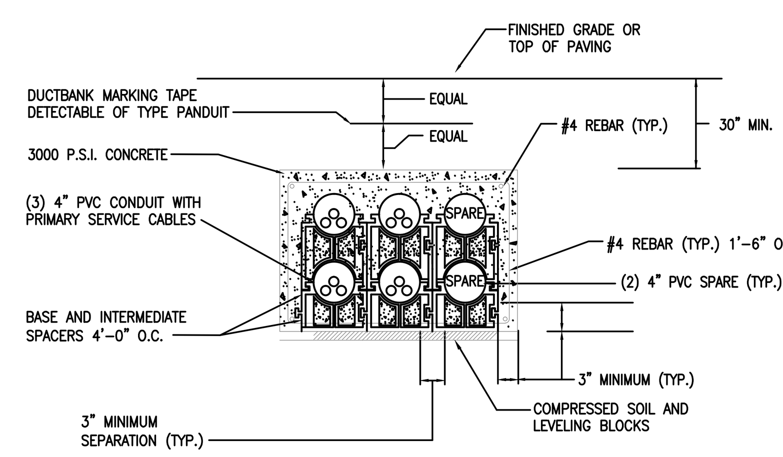

NOTES:

1. DETAIL SHOWN ABOVE SHALL BE APPLIED FOR CONCRETE DUCTBANK UNDERNEATH PAVED AREAS. ALL OTHER PORTIONS OF THE DUCTBANK SHALL NOT BE STEEL REINFORCED AND CONCRETE ENCASED.

DETAIL OF PRIMARY SERVICE DUCTBANK

NOT TO SCALE

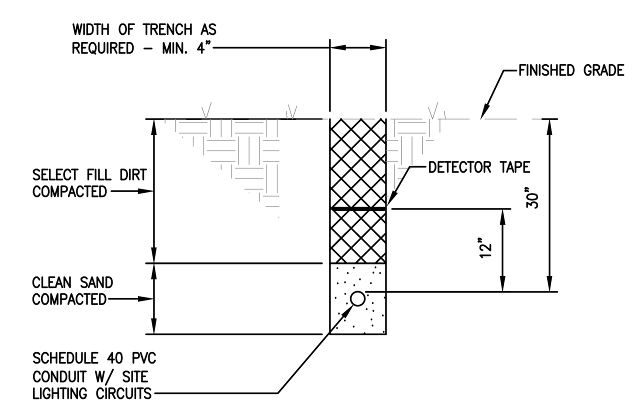

UNDERGROUND DIRECT BURIED CONDUIT

NOT TO SCALE

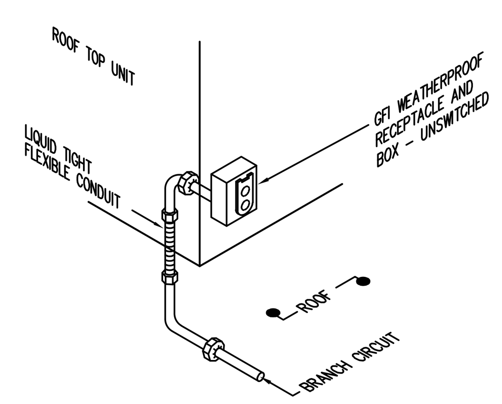

DETAIL OF ROOF RECEPTACLE ON ROOF

NOT TO SCALE

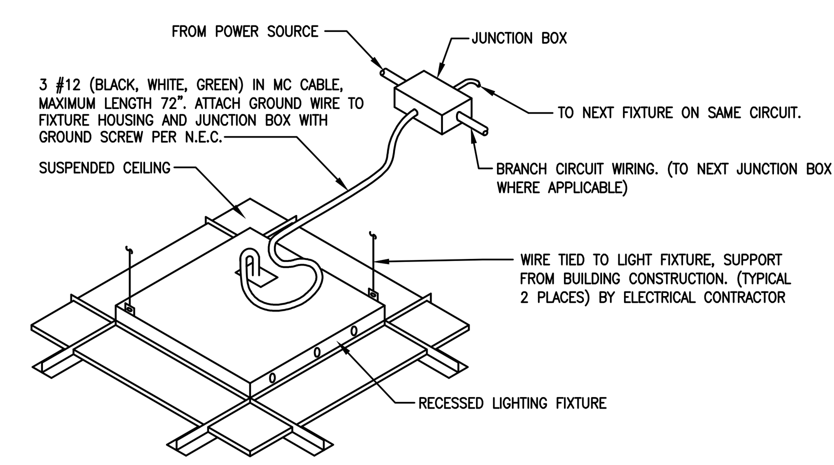

TYPICAL LAY-IN TROFFER DETAIL

NOT TO SCALE

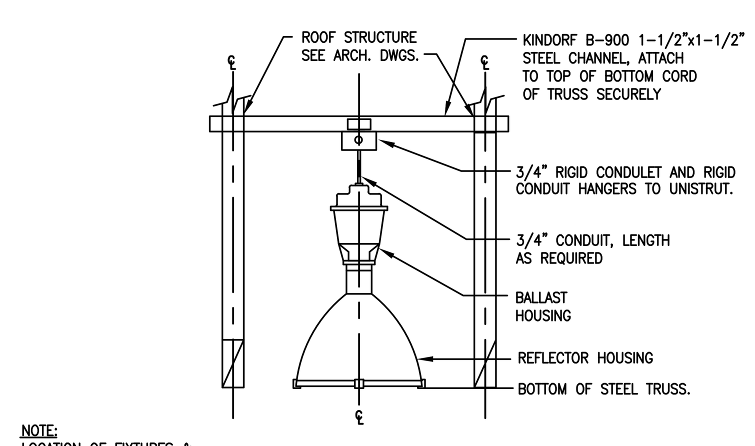

NOTE:
LOCATION OF FIXTURES & CHANNEL IS DIAGRAMMATIC. ACTUAL LOCATION OF CHANNEL NEEDS TO BE VERIFIED WITH NEW STRUCTURE.

FIXTURE MOUNTING DETAIL

NOT TO SCALE — FIXTURE TYPE "C"

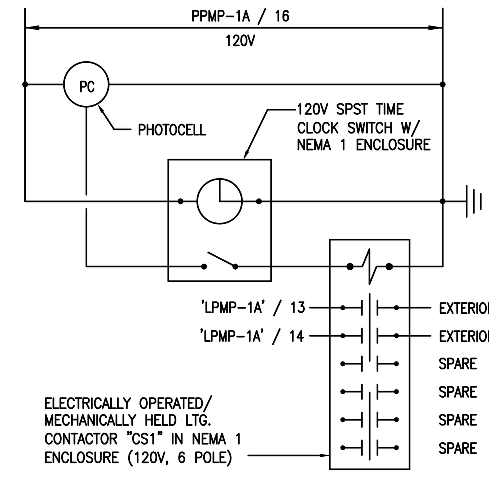

PHOTO/TIME CLOCK CONTROL DIAGRAM "CS1"

NOT TO SCALE — MULTI-PURPOSE ROOM

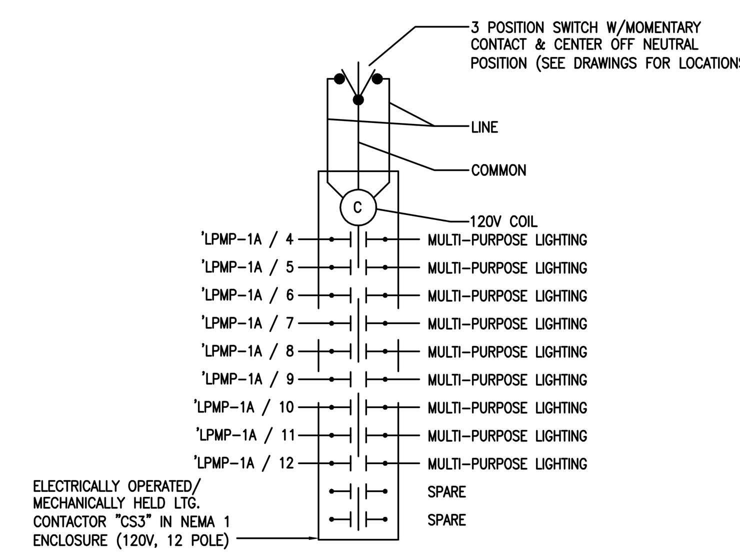

LIGHTING CONTROL DIAGRAM "CS2"

NOT TO SCALE — MULTIPURPOSE ROOM

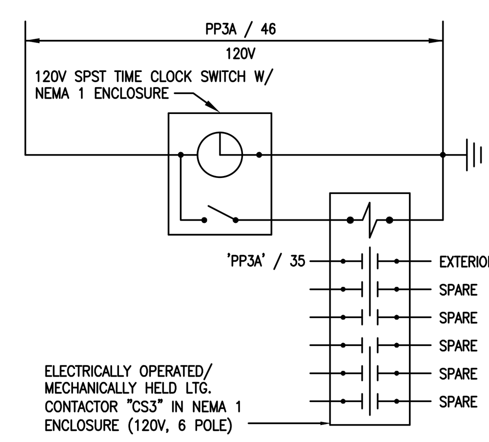

TIME CLOCK CONTROL DIAGRAM "CS3"

NOT TO SCALE — ENVIROMENTAL SCIENCE

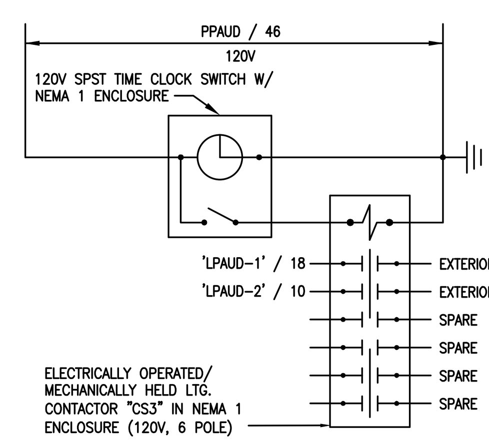

TIME CLOCK CONTROL DIAGRAM "CS4"

NOT TO SCALE — ENVIROMENTAL SCIENCE

LEGEND

- FIXTURE CONNECTED TO EMERGENCY CIRCUIT OR CONTAINS EMERGENCY BALLAST.
- SURFACE OR LAY-IN FLUORESCENT FIXTURE
- PERIMETER FLUORESCENT SLOT FIXTURE
- 2 X 2 LAY-IN INDIRECT FLUORESCENT FIXTURE
- RECESSED OR SURFACE MOUNTED DOWNLIGHT OR HIGH BAY
- FLUORESCENT COVE LIGHT STRIP OR INDUSTRIAL
- EXIT SIGN, SINGLE OR DOUBLE FACE
- (1) E — EMERGENCY BATTERY UNIT W/NUMBER OF HEADS INDICATED ON PLANS, NUMBER NEXT TO UNIT RELATES TO CORRESPONDING REMOTE HEADS.
- (1) (1) — REMOTE EMERGENCY HEADS (SINGLE OR DOUBLE) NUMBER NEXT TO HEAD RELATES TO CORRESPONDING BATTERY UNIT.
- S — SINGLE POLE WALL SWITCH CONTROL, 48" A.F.F.
- S^3 — 3-WAY WALL SWITCH CONTROL, 48" A.F.F.
- S^4 — 4-WAY WALL SWITCH CONTROL, 48" A.F.F.
- S_D — DIMMER SWITCH CONTROL, 48" A.F.F.
- S_E — EMERGENCY SHUT-OFF SWITCH CONTROL, 48" A.F.F.
- S_M — MANUAL MOTOR STARTER, 48" A.F.F.
- S_T — MANUAL MOTOR STARTER W/THERMAL OVERLOAD, 48" A.F.F.
- S_K — KEY OPERATED WALL SWITCH, 48" A.F.F.
- OS — DUAL TECHNOLOGY, INFRARED AND ULTRASONIC CLASSROOM OCCUPANCY SENSOR, 96" A.F.F.
- DUPLEX RECEPTACLE, 18" A.F.F. UNLESS NOTED OTHERWISE
- DUPLEX RECEPTACLE WITH GROUND FAULT PROTECTION, HEIGHT AS DIRECTED BY ARCHITECT
- DOUBLE DUPLEX RECEPTACLE, 18" A.F.F. UNLESS NOTED OTHERWISE
- HEAVY DUTY RECEPTACLE, 18" A.F.F. UNLESS NOTED OTHERWISE
- FLOOR OUTLET WITH DOUBLE DUPLEX RECEPTACLE AND BLANK COMPARTMENTS FOR DATA OUTLETS BY OTHERS. PROVIDE ALL REQUIRED ACCESSORIES TO SUPPORT THE SERVICES TO BE STUBBED UP IN WALL.
- TELE/DATA OUTLET CONSISTING OF A 1900 SERIES BOX, 1" CONDUIT STUBBED ABOVE ACCESSIBLE CEILING WITH PULL CORD. MOUNT 18" A.F.F. UNLESS NOTED OTHERWISE. REFER TO ARCHITECTURAL DRAWING FOR DEVICE QUANTITY AT EACH LOCATION.
- J — JUNCTION BOX
- ELECTRIC PANELBOARD
- BRANCH WIRING LOCATED BELOW THE SLAB
- CIRCUIT HOMERUN LOCATED BELOW THE SLAB
- BRANCH WIRING CONCEALED WITHIN THE BUILDING
- CIRCUIT HOMERUNS CONCEALED WITHIN THE BUILDING
- MOTOR OUTLET
- MOTOR STARTER
- COMBINATION MOTOR STARTER / DISCONNECT SWITCH
- NON-FUSED DISCONNECT SWITCH
- FUSED DISCONNECT SWITCH
- P — FIRE ALARM PULL STATION, 48" AFF
- s — FIRE ALARM COMBINATION HORN/SPEAKER AND STROBE. 80" AFF
- P — FIRE ALARM CEILING MTD SPEAKER/STROBE
- Ps — FIRE ALARM CEILING MTD STROBE
- hs — FIRE ALARM CEILING MTD HORN/STROBE
- FIRE ALARM DUCT DETECTOR
- RM — FIRE ALARM RELAY MODULE
- M — FIRE ALARM MAGNETIC HOLD OPEN
- FACP — FIRE ALARM CONTROL PANEL
- FSA — FIRE ALARM ANNUNICATOR PANEL
- PAD — POWER SUPPLY – AUXILARY
- ECS — PROWATCH ECS INTERFACE
- MIC — REMOTE MICROPHONE
- FA — FIRE FIGHTER HAND SET STATION
- NR — NETWORK REPEATER
- PC — PROCETIVE COVER
- WP — WEATHERPROOF
- E.C. — ELECTRICAL CONTRACTOR
- ER — EXISTING TO REMAIM
- NL — INDICATES FIXTURE ON UNSWITCHED NITE LIGHT CIRCUIT
- C.B. — CIRCUIT BREAKER
- A.F.F. — ABOVE FINISHED FLOOR
- A.F.G. — ABOVE FINISHED GRADE
- WG — WIRE GUARD
- GFI — GROUND FAULT INTERRUPTING
- * OR + — MOUNT ABOVE COUNTER

FINAL DRAWINGS
FOR BIDDING

NO.	REVISION	DATE
1	ADDENDUM #1	11/28/12
2	ADDENDUM #2	12/04/12

Crabtree, Rohrbaugh & Associates Architects
401 East Winding Hill Road
Mechanicsburg, Pennsylvania 17055
phone: (717) 458-0272 · fax: (717) 458-0047

DELAWARE ARCHITECTS, LLC
550 S. DUPONT BLVD. SUITE E - MILFORD, DE 19963
Office - 302-491-6047 Fax - 302-491-6048

POLYTECH SCHOOL DISTRICT
ADDITIONS AND RENOVATIONS TO POLYTECH HIGH SCHOOL

SCHEDULES
ELECTRICAL

furlow associates
consulting engineers
1206 society drive · claymont, de 19703

SCALE:	NONE
DESIGN BY:	WJS
DRAWN BY:	WJS
CHECKED BY:	SAJ
DACL FILE:	Project Number
DATE:	08/15/2012

E1.1

©COPYRIGHT 2011 DELAWARE ARCHITECTS, LLC

FINAL DRAWINGS
FOR BIDDING

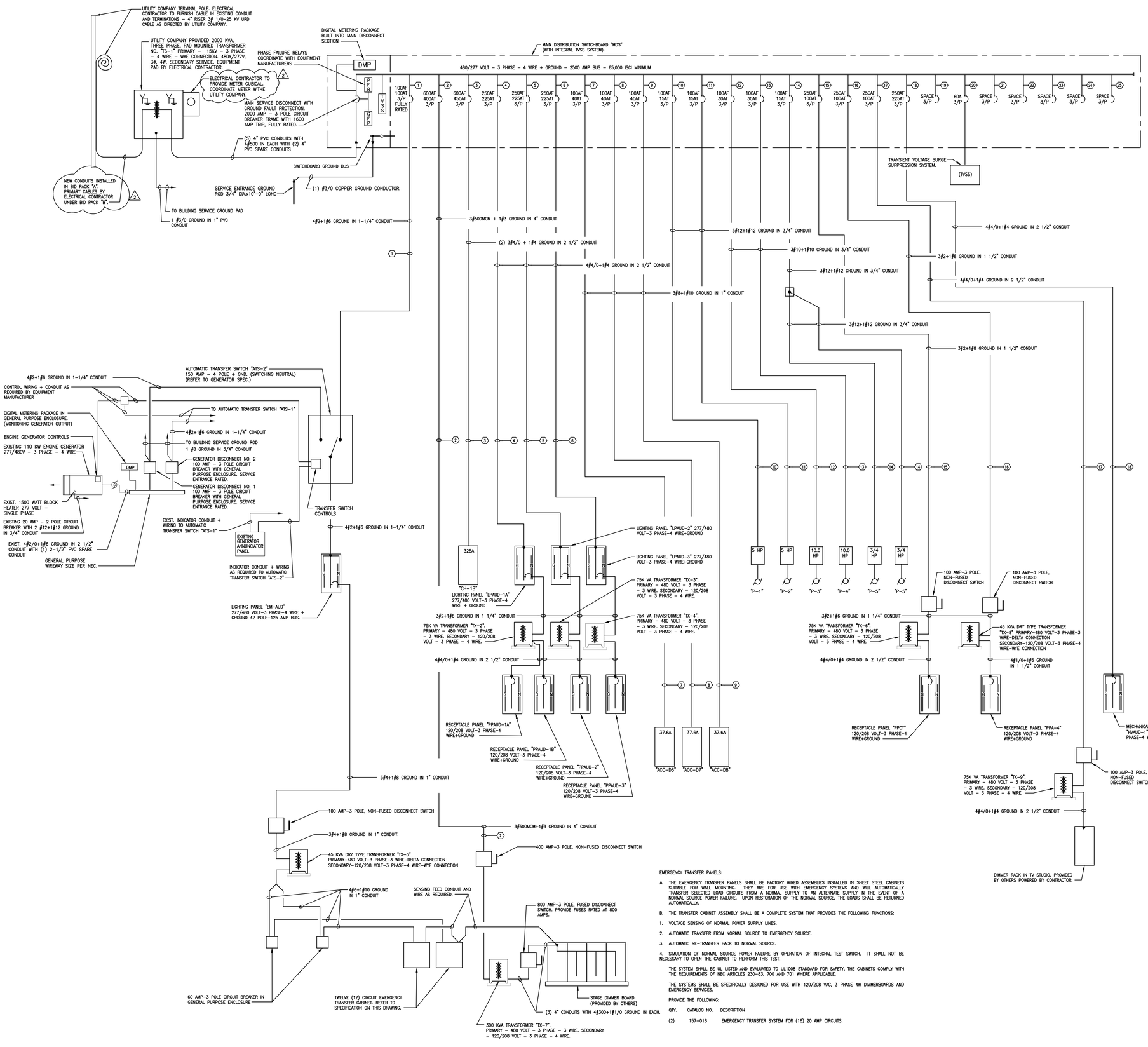

NEW PANEL SCHEDULE

"LPAUD–1A" – 277/480V–3 PHASE – 4 WIRE + GND. 42 POLE, 225A BUS M.L.O., 18,000 AIC, SURFACE MTD. WITH THE FOLLOWING CIRCUIT BREAKERS:
(1) 125A–3/P C.B. (TX–2)
(1) 15A–3/P C.B. (HE–D3)
(18) 20A–1/P C.B.
(6) 20A–1/P C.B. (INACTIVE)

"LPAUD–2" – 277/480V–3 PHASE – 4 WIRE + GND. 42 POLE, 225A BUS M.L.O., 18,000 AIC, SURFACE MTD. WITH THE FOLLOWING CIRCUIT BREAKERS:
(1) 125A–3/P C.B. (TX–3)
(10) 20A–1/P C.B.
(5) 20A–1/P C.B. (INACTIVE)

"LPAUD–3" – 277/480V–3 PHASE – 4 WIRE + GND. 42 POLE, 225A BUS M.L.O., 18,000 AIC, SURFACE MTD. WITH THE FOLLOWING CIRCUIT BREAKERS:
(1) 70A–3/P C.B. (TX–5)
(1) 40A–3/P C.B. (ACC–D9)
(1) 25A–3/P C.B. (RAHU–D1) (S)
(1) 15A–3/P C.B. (RAHU–D1) (R)
(9) 20A–1/P C.B. (ACTIVE)
(5) 20A–1/P C.B. (INACTIVE)

"LPMP–1A" – 277/480V–3 PHASE – 4 WIRE + GND. 42 POLE, 225A BUS M.L.O., 18,000 AIC, SURFACE MTD. WITH THE FOLLOWING CIRCUIT BREAKERS:
(1) 70A–3/P C.B. (TX–1)
(2) 50A–3/P C.B. (RTU'S)
(2) 30A–1/P C.B. (ECH–B1& B2)
(14) 20A–1/P C.B.
(5) 20A–1/P C.B. (INACTIVE)

"LP–3A" – 277/480V–3 PHASE – 4 WIRE + GND. 18 POLE, 125A BUS, 70A M.C.B., 18,000 AIC, SURFACE MTD. WITH THE FOLLOWING CIRCUIT BREAKERS:
(12) 20A–1/P C.B.
(5) 20A–1/P C.B. (INACTIVE)

"MVAUD–1" – 277/480V–3 PHASE – 4 WIRE + GND. 42 POLE, 225A BUS, 250A M.C.B., 18,000 AIC, SURFACE MTD. WITH THE FOLLOWING CIRCUIT BREAKERS:
(1) 50A–3/P C.B.
(2) 30A–3/P C.B.
(2) 25A–3/P C.B.
(13) 15A–3/P C.B.

"MV–3" – 277/480V–3 PHASE – 4 WIRE + GND. 42 POLE, 225A BUS, 250A M.C.B., 18,000 AIC, SURFACE MTD. WITH THE FOLLOWING CIRCUIT BREAKERS:
(1) 70A–3/P C.B. (RTU–C1)
(1) 20A–3/P C.B. (RTU–C2)
(1) 30A–1/P C.B. (WH–2)
(2) 25A–1/P C.B. (EWH–1 & 2)
(5) 20A–1/P C.B. (INACTIVE)

"MV–RPH–1" – 277/480V–3 PHASE – 4 WIRE + GND. 42 POLE, 225A BUS, 18,000 AIC, SURFACE MTD. WITH THE FOLLOWING CIRCUIT BREAKERS:
(1) 80A–3/P C.B. (RPH–3)
(1) 70A–3/P C.B. (RPH–4)
(1) 50A–3/P C.B. (RPH–5)

"MV–RPH–2" – 277/480V–3 PHASE – 4 WIRE + GND. 42 POLE, 225A BUS, 18,000 AIC, SURFACE MTD. WITH THE FOLLOWING CIRCUIT BREAKERS:
(2) 80A–3/P C.B. (RPH–1 & 2)

"PPAUD–1A" – 120/208V–3 PHASE – 4 WIRE + GND. 42 POLE, 225A BUS, 250A M.C.B., 18,000 AIC, SURFACE MTD. WITH THE FOLLOWING CIRCUIT BREAKERS:
(38) 20A–1/P C.B. (ACTIVE)
(4) 20A–1/P C.B. (INACTIVE)

"PPAUD–1B" – 120/208V–3 PHASE – 4 WIRE + GND. 42 POLE, 225A BUS, 250A M.C.B., 18,000 AIC, SURFACE MTD. WITH THE FOLLOWING CIRCUIT BREAKERS:
(1) 15A–2/P C.B. (ACTIVE)
(17) 20A–1/P C.B. (ACTIVE)
(2) 25A–1/P C.B. (ACTIVE)
(8) 20A–1/P C.B. (INACTIVE)

"PPAUD–2A" – 120/208V–3 PHASE – 4 WIRE + GND. 54 POLE, 225A BUS, 250A M.C.B., 18,000 AIC, SURFACE FLUSH MTD. WITH THE FOLLOWING CIRCUIT BREAKERS:
(6) 20A–2/P C.B. (ACTIVE)
(1) 15A–2/P C.B. (ACTIVE)
(28) 20A–1/P C.B. (ACTIVE)
(8) 20A–1/P C.B. (INACTIVE)

"PPAUD–3" – 120/208V–3 PHASE – 4 WIRE + GND. 54 POLE, 225A BUS, 150A M.C.B., 18,000 AIC, FLUSH MTD. WITH THE FOLLOWING CIRCUIT BREAKERS:
(37) 20A–1/P C.B. (ACTIVE)
(5) 20A–1/P C.B. (INACTIVE)

"PPCT" – 120/208V–3 PHASE – 4 WIRE + GND. 42 POLE, 225A BUS M.L.O., 18,000 AIC, FLUSH MTD. WITH THE FOLLOWING CIRCUIT BREAKERS:
(20) 20A–1/P C.B. (ACTIVE)
(8) 20A–1/P C.B. (SPARE)

"PP3A" – 120/208V–3 PHASE – 4 WIRE + GND. 54 POLE, 225A BUS M.L.O., 18,000 AIC, FLUSH MTD. WITH THE FOLLOWING CIRCUIT BREAKERS:
(1) 20A–2/P C.B. (ACC–1/CU–C1)
(46) 20A–1/P C.B. (ACTIVE)
(8) 20A–1/P C.B. (INACTIVE)

"PPA–4" – 120/208V–3 PHASE – 4 WIRE + GND. 42 POLE, 225A BUS, 150A M.C.B., 18,000 AIC, FLUSH MTD. WITH THE FOLLOWING CIRCUIT BREAKERS:
(29) 20A–1/P C.B. (ACTIVE)
(8) 20A–1/P C.B. (INACTIVE)

"PPMP–1A" – 120/208V–3 PHASE – 4 WIRE + GND. 30 POLE, 125A BUS, 125A M.C.B., 18,000 AIC, FLUSH MTD. WITH THE FOLLOWING CIRCUIT BREAKERS:
(19) 20A–1/P C.B. (ACTIVE)
(8) 20A–1/P C.B. (SPARE)

"CH–1" – 120/208V–3 PHASE – 4 WIRE + GND. 42 POLE, 225A BUS M.L.O., 18,000 AIC, FLUSH MTD. WITH THE FOLLOWING CIRCUIT BREAKERS:
(5) 25A–1/P C.B. (ACTIVE)
(7) 20A–1/P C.B. (ACTIVE)
(8) 20A–1/P C.B. (SPARE)

2

"EM–AUD" – 120/208V–3 PHASE – 4 WIRE + GND. 18 POLE, 125A BUS M.L.O., 10,000 AIC, SURFACE MTD. WITH THE FOLLOWING CIRCUIT BREAKERS:
(10) 20A–1/P C.B. (ACTIVE)
(8) 20A–1/P C.B. (SPARE)
(1) 70A–3/P C.B. (TX–5)

"EM–ES" – 120/208V–3 PHASE – 4 WIRE + GND. 18 POLE, 125A BUS M.L.O., 10,000 AIC, SURFACE MTD. WITH THE FOLLOWING CIRCUIT BREAKERS:
(5) 20A–1/P C.B. (ACTIVE)
(2) 20A–1/P C.B. (SPARE)

EMERGENCY TRANSFER PANELS:

A. THE EMERGENCY TRANSFER PANELS SHALL BE FACTORY WIRED ASSEMBLIES INSTALLED IN SHEET STEEL CABINETS SUITABLE FOR WALL MOUNTING. THEY ARE FOR USE WITH EMERGENCY SYSTEMS AND WILL AUTOMATICALLY TRANSFER SELECTED LOAD CIRCUITS FROM A NORMAL SUPPLY TO AN ALTERNATE SUPPLY IN THE EVENT OF A NORMAL SOURCE POWER FAILURE. UPON RESTORATION OF THE NORMAL SOURCE, THE LOADS SHALL BE RETURNED AUTOMATICALLY.

B. THE TRANSFER CABINET ASSEMBLY SHALL BE A COMPLETE SYSTEM THAT PROVIDES THE FOLLOWING FUNCTIONS:

1. VOLTAGE SENSING OF NORMAL POWER SUPPLY LINES.
2. AUTOMATIC TRANSFER FROM NORMAL SOURCE TO EMERGENCY SOURCE.
3. AUTOMATIC RE–TRANSFER BACK TO NORMAL SOURCE.
4. SIMULATION OF NORMAL SOURCE POWER FAILURE BY OPERATION OF INTEGRAL TEST SWITCH. IT SHALL NOT BE NECESSARY TO OPEN THE CABINET TO PERFORM THIS TEST.

THE SYSTEM SHALL BE UL LISTED AND EVALUATED TO UL1008 STANDARD FOR SAFETY, THE CABINETS COMPLY WITH THE REQUIREMENTS OF NEC ARTICLES 230–83, 700 AND 701 WHERE APPLICABLE.

THE SYSTEMS SHALL BE SPECIFICALLY DESIGNED FOR USE WITH 120/208 VAC, 3 PHASE 4W DIMMERBOARDS AND EMERGENCY SERVICES.

PROVIDE THE FOLLOWING:

QTY.	CATALOG NO.	DESCRIPTION
(2)	157–016	EMERGENCY TRANSFER SYSTEM FOR (16) 20 AMP CIRCUITS.

NEW ADDITION SINGLE LINE DIAGRAM

NOT TO SCALE

furlow associates
consulting engineers
1206 society drive · claymont, de 19703

NO.	REVISION	DATE
1	ADDENDUM #1	11/28/12
2	ADDENDUM #2	12/04/12

Crabtree, Rohrbaugh & Associates Architects
401 East Winding Hill Road
Mechanicsburg, Pennsylvania 17055
phone: (717) 458-0872 · fax: (717) 458-0047

DELAWARE ARCHITECTS, LLC
550 S. DUPONT BLVD. SUITE E - MILFORD, DE 19963
Office - 302-491-6047 Fax - 302-491-6048

POLYTECH SCHOOL DISTRICT
ADDITIONS AND RENOVATIONS TO
POLYTECH HIGH SCHOOL

SINGLE LINE DIAGRAM & LEGEND ELECTRICAL

SCALE:	NONE
DESIGN BY:	WJS
DRAWN BY:	WJS
CHECKED BY:	SAJ
DALLC FILE:	Project Number
DATE:	08/15/2012

E1.4

COPYRIGHT 2011 DELAWARE ARCHITECTS, LLC

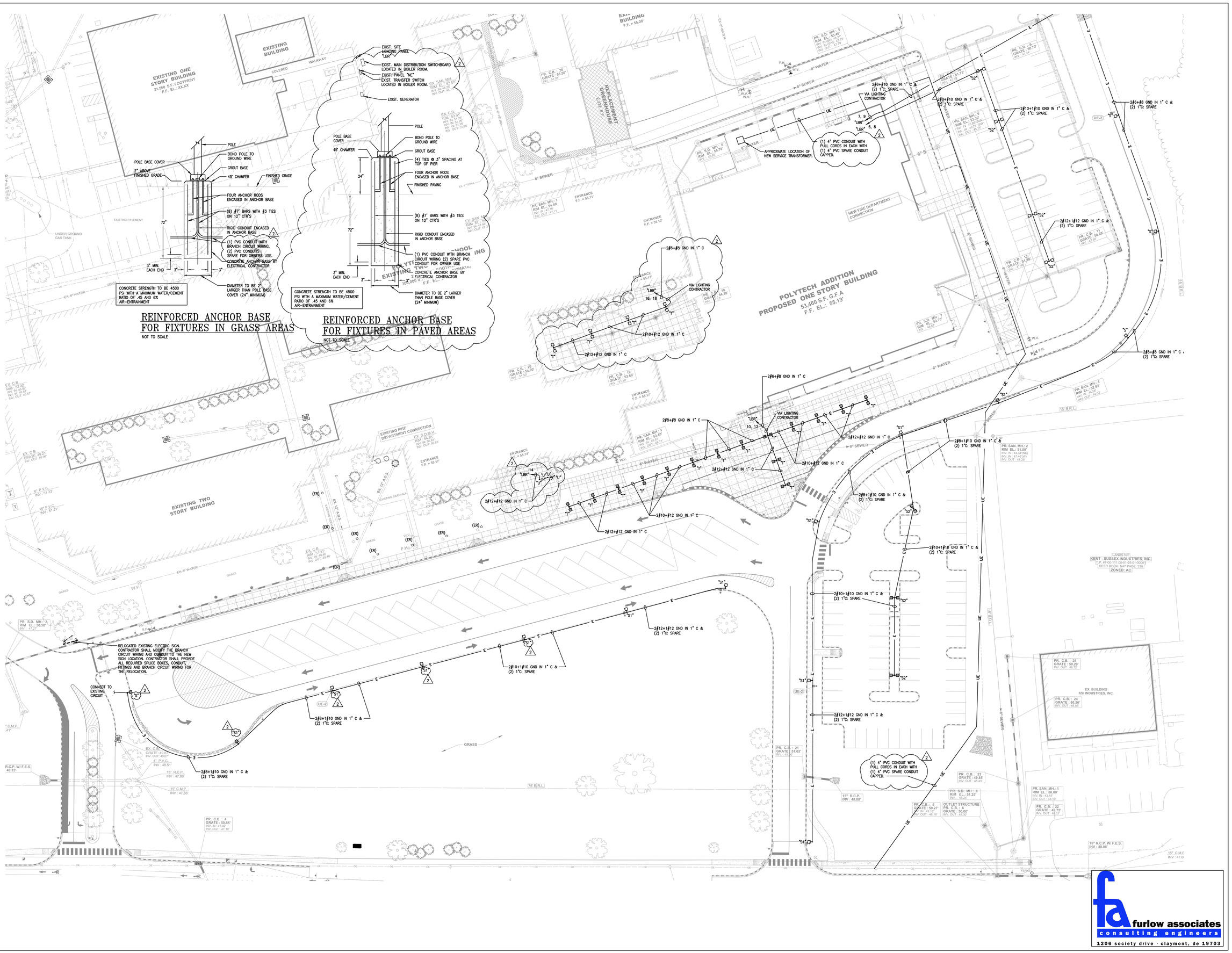

furlow associates
consulting engineers
1206 society drive · claymont, de 19703

NO.	REVISION	DATE
1	ADDENDUM #1	11/29/12
2	ADDENDUM #2	12/04/12
3		
4		
5		
6		
7		
8		
9		
10		

Crabtree, Rohrbaugh & Associates Architects
401 East Winding Hill Road
Mechanicsburg, Pennsylvania 17055
phone: (717) 458-0272 - fax: (717) 458-0047

DELAWARE ARCHITECTS, LLC
550 S. DUPONT BLVD. SUITE E - MILFORD, DE 19963
Office - 302-491-0047 FAX - 302-491-0048

POLYTECH SCHOOL DISTRICT
ADDITIONS AND RENOVATIONS TO POLYTECH HIGH SCHOOL

SITE UTILITY PLAN ELECTRICAL

SCALE:	1"=30'
DESIGN BY:	WJS
DRAWN BY:	WJS
CHECKED BY:	SAJ
DALLC FILE:	Project Number
DATE:	06-08-12

E300

© COPYRIGHT 2011 DELAWARE ARCHITECTS, LLC

FINAL DRAWINGS
FOR BIDDING

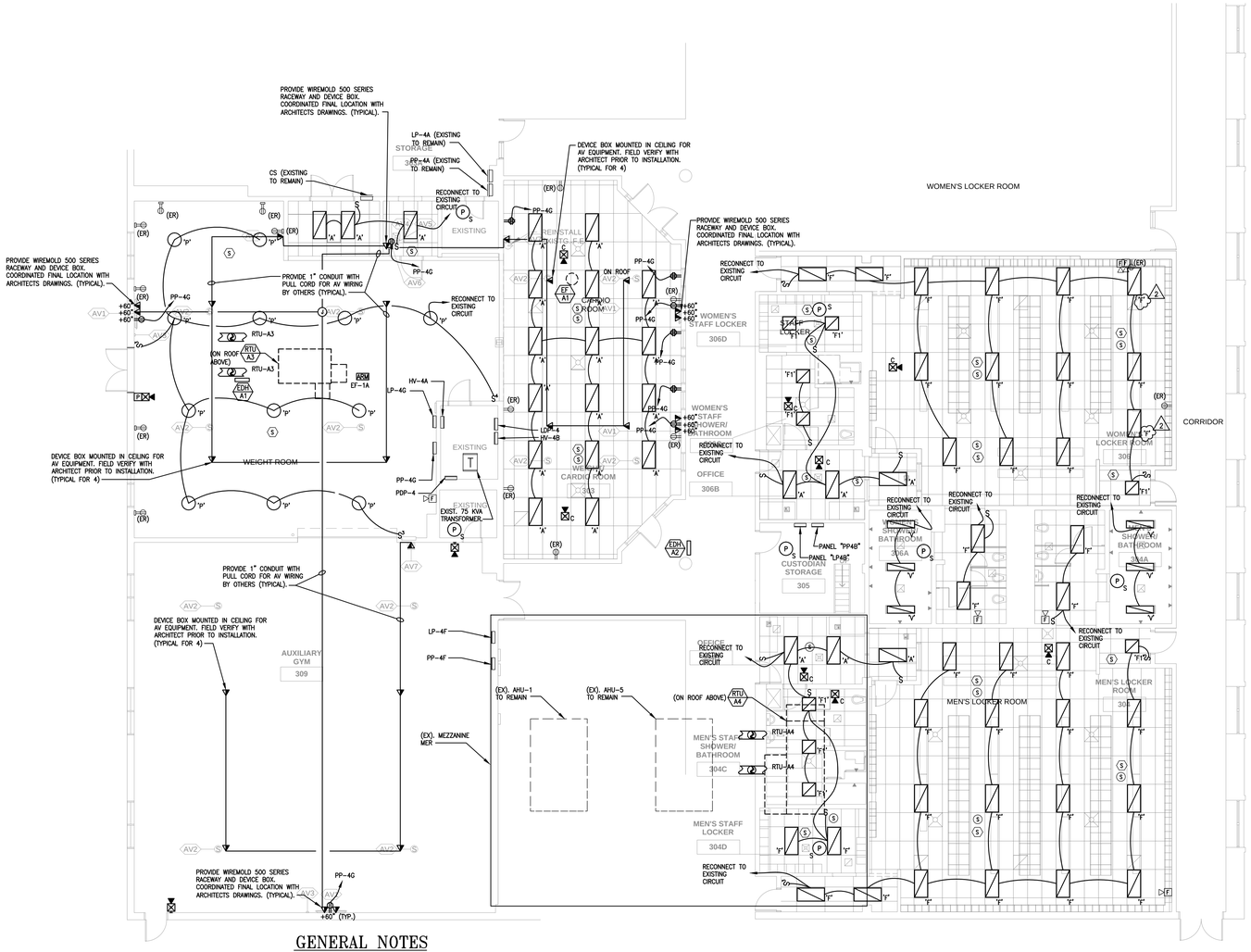

GENERAL NOTES

1. EXISTING ELECTRICAL PANELS/SWITCHBOARDS WERE RECENTLY REPLACED OR RETROFITTED WITH NEW INTERIORS, BREAKERS, AND FRONTS. CONTRACTOR SHALL COORDINATE MANUFACTURE TYPE FOR THE PURCHASE OF REQUIRED CIRCUIT BREAKERS INDICATED.

1 FLOOR PLAN ELECTRICAL - AREA "AW" - ALTERNATE
1/8" = 1'-0"

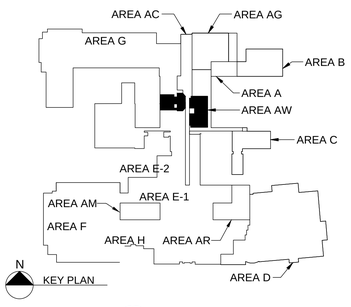

furlow associates
consulting engineers
1206 society drive · claymont, de 19703

NO.	REVISION	DATE
1	ADDENDUM #2	12/04/12

Crabtree, Rohrbaugh & Associates Architects
4811 Jonestown Road, Suite 230
Harrisburg, Pennsylvania 17055
phone: (717) 458-0272 - fax: (717) 458-0047

DELAWARE ARCHITECTS, LLC
550 S. DUPONT BLVD. SUITE E - MILFORD, DE 19963
Office: 302-491-6047 Fax: 302-491-6048

POLYTECH SCHOOL DISTRICT
ADDITIONS AND RENOVATIONS TO POLYTECH HIGH SCHOOL

WEIGHT ROOM & LOCKERS ELECTRICAL

SCALE:	1/8" = 1'-0"
DESIGN BY:	WJS
DRAWN BY:	WJS
CHECKED BY:	SAJ
DALLC FILE:	Project Number
DATE:	08/15/2012

EA1.2

©COPYRIGHT 2011 DELAWARE ARCHITECTS, LLC

FINAL DRAWINGS
FOR BIDDING

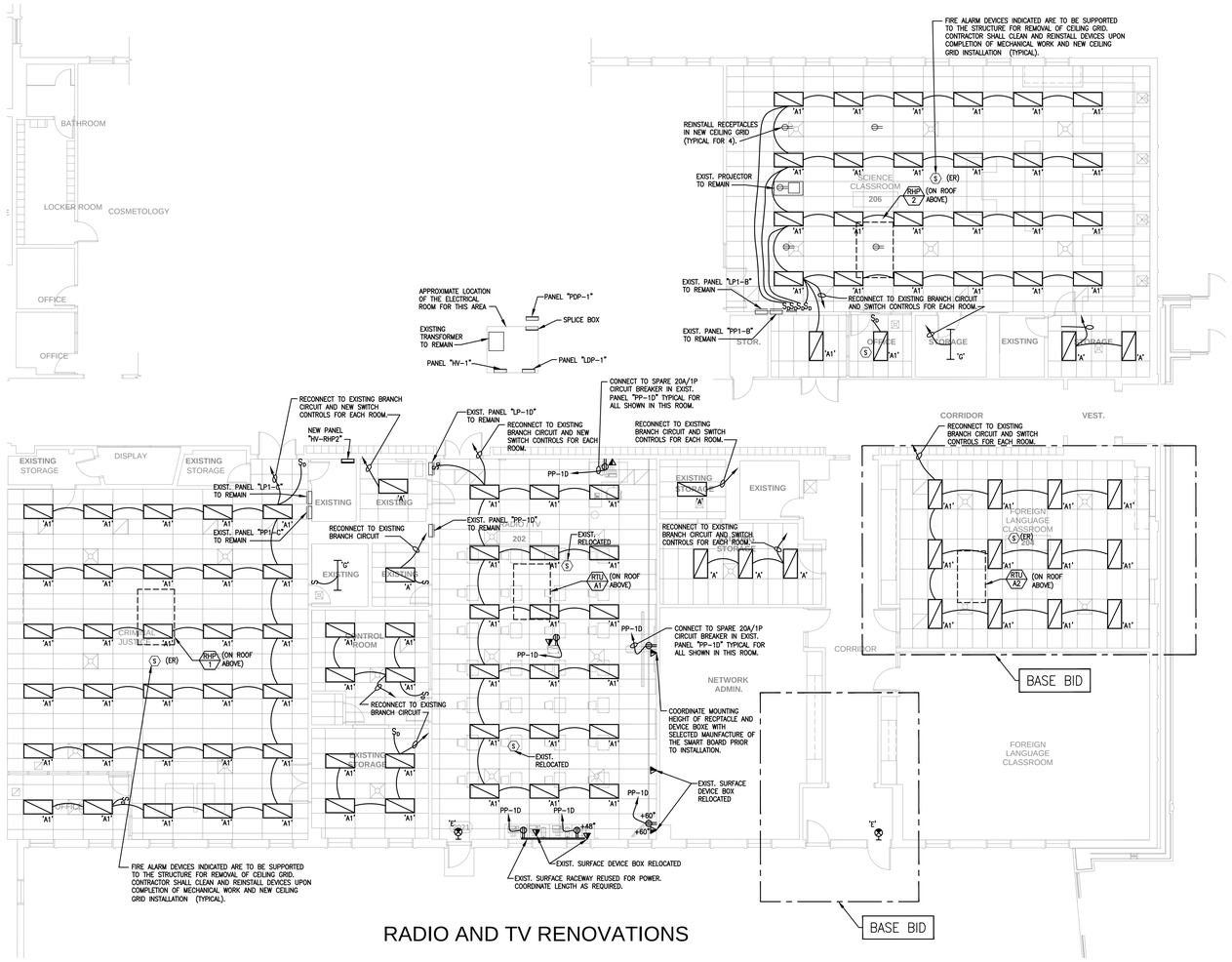

RADIO AND TV RENOVATIONS

1 FLOOR PLAN ELECTRICAL - AREA "AR" - ALTERNATE
1/8" = 1'-0"

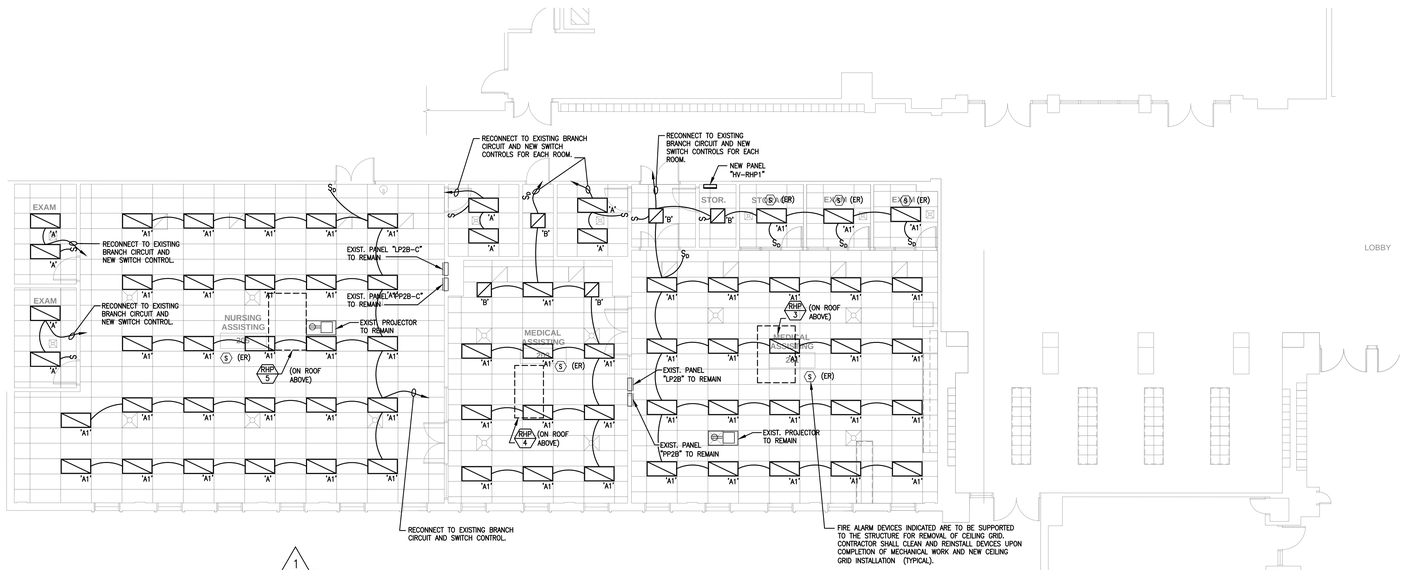

2 FLOOR PLAN ELECTRICAL - AREA "AM" - ALTERNATE
1/8" = 1'-0"

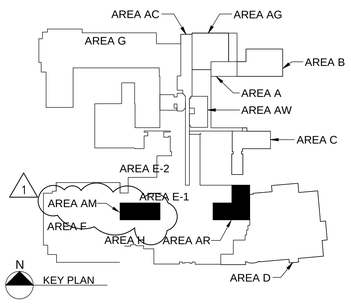

furlow associates
consulting engineers
1206 society drive · claymont, de 19703

NO.	REVISION	DATE
1	ADDENDUM #2	12/04/12

Crabtree, Rohrbaugh & Associates Architects
4811 Jonestown Road, Suite 230
Harrisburg, Pennsylvania 17055
phone: (717) 458-0272 - fax: (717) 458-0047

DELAWARE ARCHITECTS, LLC
550 S. DUPONT BLVD. SUITE E - MILFORD, DE 19963
Office: 302-491-6047 Fax: 302-491-6048

POLYTECH SCHOOL DISTRICT
ADDITIONS AND RENOVATIONS TO POLYTECH HIGH SCHOOL

RADIO, TV, & MEDICAL ELECTRICAL

SCALE:	1/8" = 1'-0"
DESIGN BY:	WJS
DRAWN BY:	WJS
CHECKED BY:	SAJ
DALLC FILE:	Project Number
DATE:	08/15/2012

EA1.3

© COPYRIGHT 2011 DELAWARE ARCHITECTS, LLC