Pennsylvania
Duane Morris Plaza
30 S. 17th Street
Suite 830
Philadelphia, PA 19103
Phone
267.804.7286

Delaware
315 S. Chapel Street
Newark, DE 19711
Phone
302.738.7172
Fax
302.738.7175

www.dedc-eng.com

CARVEL STATE OFFICE BUILDING
HVAC & SPRINKLER UPGRADES
OMB/DFM CONTRACT # MJ1002000014
ADDENDUM #2

SUBSITUTION REQUESTS

1. Acuity nLight Digital Controls has been found as an acceptable manufacturer for lighting controls.

It is the contractor's responsibility for any costs associated with deviating from the basis of design that subsequently become apparent or that are apparent now. Costs associated could include but are not limited to additional structure, space constraints for equipment service, electrical power requirements (breaker/fuse sizing and wire sizing changes), and piping connection location modifications. The contractor shall ensure approved as equal equipment meets or exceeds all requirements found both on the drawings and in the specifications provided for this project. Any approved as equal equipment submitted may be rejected that does not satisfy the specifications. The engineer has not redesigned the project around this substitution.

QUESTIONS:

1. Please provide a door hardware schedule.
    a. A door hardware schedule will be supplied in the next Addendum.
2. The specs include a section for cast-in-place concrete (033000) and 7/M590 shows a concrete pad detail, but I don't see any new concrete pads on the drawings. Drawing M390 shows existing concrete pads to remain for units AC-18 and AC-19. Please confirm that there is no concrete work on this project.
    a. Concrete work is required if the air conditioning units utilized on this project are larger than the existing pads in the mechanical room. The basis of design air conditioning units do not require the pad to be extended.
3. Demo notes D-04 and D-10 refer to disassembling and reassembling existing furniture. This work is typically by the owner. Is this work intended to be part of the contract?
    a. This work is to be included in the project.
4. Note 5 on drawing E190 refers to relocating data feeds. Please confirm that data wiring is by the owner.
    a. Structured cabling is to be included in this contract. Please see specification section 27 10 00 and revised electrical drawings included with this addendum.
5. The Door hardware spec calls for us to see the hardware schedule, however, Drwg A701 does not have a hardware schedule. Please advise.
    a. A door hardware schedule will be supplied in the next Addendum.
6. We have installed carpet on the 9th floor in several larger areas in the last year and the plans not only have these areas being redone but also with a different carpet.
    a. Please see revised A-102.
7. Will there be a place on site to store cubicles and other office furniture that needs to be reinstalled?
    a. There is no area for storage of system furniture outside of work area. Furniture will be disassembled or moved as required to facilitate work in space.

DEDC LLC
ENGINEERING | DESIGN | CONSULTING

Pennsylvania
Duane Morris Plaza
30 S. 17th Street
Suite 830
Philadelphia, PA 19103
Phone
267.804.7286

Delaware
315 S. Chapel Street
Newark, DE 19711
Phone
302.738.7172
Fax
302.738.7175

www.dedc-eng.com

8. On the Phasing Drawing Area 6 start date is 2/30/20 – is that a misprint and should it be 2/1/20 to 3/13/20?
    a. That is correct. Please see revised phasing plan.
9. On Drawing A-701 for Wall Type 1 where walls to underside of structural deck – what is the height?
    a. Contractor to verify prior to bid.
10. On Drawing A-701 for Wall Type 1 it is a new wall but at the top of the new wall it states exist wall to remain above ceiling – what does this mean and/or what is the intent?
    a. Disregard note, entire wall is new.
11. Will contractor be able to use the Elevator?
    a. Yes, the freight elevator may be utilized. Contractor is responsible for coordinating the use of the elevator with DFM maintenance.
12. Will there be an area to store the system furniture, outside of the work area? If so, where?
    a. There is no area for storage of system furniture outside of work area. Furniture will be disassembled or moved as required to facilitate work in space.
13. Drawing AD102 shows work to be done in the stair wells, ante room, Elect Room, Phone/Comm room and the corridor (lin3 13 - B thru H). What phase will this work be in?
    a. Please see revised phasing plan. Note work only applies to areas with drop ceilings.
14. Impact rates and abuse resistant wall board is listed in the specification. Will either one be required for this project?
    a. Not required.
15. Who is responsible for telecommunications?
    a. Structured cabling is to be included in this contract. Please see specification section 27 10 00 and revised electrical drawings included with this addendum.

DEDC LLC
ENGINEERING | DESIGN | CONSULTING

Pennsylvania
Duane Morris Plaza
30 S. 17th Street
Suite 830
Philadelphia, PA 19103
Phone
267.804.7286

Delaware
315 S. Chapel Street
Newark, DE 19711
Phone
302.738.7172
Fax
302.738.7175

www.dedc-eng.com

16. DRAWING REVISIONS:
    1. Drawing PH090:
        a. Split Area #2 into Area #2 & Area #9 to delineate day work from night/weekend work.
        b. Extended phasing areas to include mechanical rooms and corridors.
        c. Revised general notes.
    2. Drawing M690:
        a. Revised schedules.
    3. Drawing E090:
        a. Additional symbols for electrical legend.
    4. Drawing ED190:
        a. Revised scope in vendor space.
        b. Revised scope in desktop support.
    5. Drawing E190:
        a. Revised scope in vendor space.
        b. Revised scope in desktop support.
        c. Addition of floor boxes and wall boxes in various offices and conference rooms.
    6. Drawing E390:
        a. Revised schedules.
    7. Drawing AD101:
        a. Office 909 wall and door demo
        b. Added scope of demo wall and corner guards, remove wallpaper, patch and prep walls for paint
        c. Update keynote D-04, typical all drawings.
        d. Added keynotes C-08 and C-09, typical all drawings.
        e. Updated scope of floor demo.
    8. Drawing AD102:
        a. Updated scope of ceiling work in “core” of 9th floor.
    9. Drawing AR101:
        a. Updated scope of ceiling work in “core” of 9th floor.
    10. Drawing A-701:
        a. Updated door schedule
        b. Removed note regarding existing wall to remain above ceiling.

SPECIFICATION REVISIONS:

00 43 13: Replace section in its entirety.

00 61 13.13: Replace section in its entirety.

00 61 13.16: Replace section in its entirety.

23 73 13: New section.

23 81 24: New section.

27 10 00: Structured Cabling.

Pennsylvania
Duane Morris Plaza
30 S. 17th Street
Suite 830
Philadelphia, PA 19103
Phone
267.804.7286

Delaware
315 S. Chapel Street
Newark, DE 19711
Phone
302.738.7172
Fax
302.738.7175

www.dedc-eng.com

Addendum #2

1. Addendum #2 Summary (this document) (4 pages)

2. Drawings (10 pages)
   a. PH090
   b. AD101
   c. AD102
   d. AR101
   e. A-701
   f. M690
   g. E090
   h. ED190
   i. E190
   j. E390

3. Specification (96 pages)
   a. 00 43 13
   b. 00 61 13.13
   c. 00 61 13.16
   d. 23 73 13
   e. 23 81 24
   f. 27 10 00

Summarized By: DEDC, LLC
Matt Lano

Date: July 30, 2019

SECTION 00 43 13
BID BOND

TO ACCOMPANY PROPOSAL
(Not necessary if security is used)

KNOW ALL MEN BY THESE PRESENTS That: _____ _____of _____ in the County of _____ _____and State of _____as **Principal**, and _____ _____ of _____ in the County of _____ and State of _____ as **Surety**, legally authorized to do business in the State of Delaware ("**State**"), are held and firmly unto the **State** in the sum of _____ _____ Dollars ($_____), or _____ percent not to exceed _____ _____ Dollars ($_____) of amount of bid on Contract No. _____, to be paid to the **State** for the use and benefit of the Office of Management and Budget for which payment well and truly to be made, we do bind ourselves, our and each of our heirs, executors, administrators, and successors, jointly and severally for and in the whole firmly by these presents.

NOW THE CONDITION OF THIS OBLIGATION IS SUCH That if the above bonded **Principal** who has submitted to the Office of Management and Budget a certain proposal to enter into this contract for the furnishing of certain material and/or services within the **State**, shall be awarded this Contract, and if said **Principal** shall well and truly enter into and execute this Contract as may be required by the terms of this Contract and approved by the Office of Management and Budget this Contract to be entered into within twenty days after the date of official notice of the award thereof in accordance with the terms of said proposal, then this obligation shall be void or else to be and remain in full force and virtue.

Sealed with _____ seal and dated this _____day of _____ in the year of our Lord two thousand and _____ (20___).

SEALED, AND DELIVERED IN THE
Presence of

_____
Name of Bidder (Organization)

Corporate Seal

By: _____
Authorized Signature

Attest _____

_____
Title

_____
Name of Surety

Witness:_____

By: _____

_____
Title

END OF SECTION

THIS PAGE INTENTIONALLY LEFT BLANK

SECTION 00 61 13.13
PERFORMANCE BOND

Bond Number: _____

KNOW ALL PERSONS BY THESE PRESENTS, that we, _____, as principal ("**Principal**"), and _____, a _____ corporation, legally authorized to do business in the State of Delaware, as surety ("**Surety**"), are held and firmly bound unto the Office of Management and Budget ("**Owner**"), in the amount of _____ ($_____), to be paid to **Owner**, for which payment well and truly to be made, we do bind ourselves, our and each and every of our heirs, executors, administrations, successors and assigns, jointly and severally, for and in the whole, firmly by these presents.

Sealed with our seals and dated this _____ day of _____, 20__.

NOW THE CONDITION OF THIS OBLIGATION IS SUCH, that if **Principal**, who has been awarded by **Owner** that certain contract known as Contract No. _____ dated the _____ day of _____, 20__ (the "Contract"), which Contract is incorporated herein by reference, shall well and truly provide and furnish all materials, appliances and tools and perform all the work required under and pursuant to the terms and conditions of the Contract and the Contract Documents (as defined in the Contract) or any changes or modifications thereto made as therein provided, shall make good and reimburse **Owner** sufficient funds to pay the costs of completing the Contract that **Owner** may sustain by reason of any failure or default on the part of **Principal**, and shall also indemnify and save harmless **Owner** from all costs, damages and expenses arising out of or by reason of the performance of the Contract and for as long as provided by the Contract; then this obligation shall be void, otherwise to be and remain in full force and effect.

Surety, for value received, hereby stipulates and agrees, if requested to do so by **Owner**, to fully perform and complete the work to be performed under the Contract pursuant to the terms, conditions and covenants thereof, if for any cause **Principal** fails or neglects to so fully perform and complete such work.

Surety, for value received, for itself and its successors and assigns, hereby stipulates and agrees that the obligation of **Surety** and its bond shall be in no way impaired or affected by any extension of time, modification, omission, addition or change in or to the Contract or the work to be performed thereunder, or by any payment thereunder before the time required therein, or by any waiver of any provisions thereof, or by any assignment, subletting or other transfer thereof or of any work to be performed or any monies due or to become due thereunder; and **Surety** hereby waives notice of any and all such extensions, modifications, omissions, additions, changes, payments, waivers, assignments, subcontracts and transfers and hereby expressly stipulates and agrees that any and all things done and omitted to be done by and in relation to assignees, subcontractors, and other transferees shall have the same effect as to **Surety** as though done or omitted to be done by or in relation to **Principal**.

Surety hereby stipulates and agrees that no modifications, omissions or additions in or to the terms of the Contract shall in any way whatsoever affect the obligation of **Surety** and its bond.

Any proceeding, legal or equitable, under this Bond may be brought in any court of competent jurisdiction in the State of Delaware. Notices to **Surety** or Contractor may be mailed or delivered to them at their respective addresses shown below.

IN WITNESS WHEREOF, **Principal** and **Surety** have hereunto set their hand and seals, and such of them as are corporations have caused their corporate seal to be hereto affixed and these presents to be signed by their duly authorized officers, the day and year first above written.

PRINCIPAL

Name: _____

Witness or Attest: Address: _____

_____ By: _____(SEAL)
Name: Name:
Title:

(Corporate Seal)

SURETY

Name: _____

Witness or Attest: Address: _____

_____ By: _____ (SEAL)
Name: Name:
Title:

(Corporate Seal)

END OF SECTION

SECTION 00 61 13.16
PAYMENT BOND

Bond Number: _____

KNOW ALL PERSONS BY THESE PRESENTS, that we, _____, as principal ("**Principal**"), and _____, a _____ corporation, legally authorized to do business in the State of Delaware, as surety ("**Surety**"), are held and firmly bound unto the Office of Management and Budget ("**Owner**"), in the amount of _____ ($_____), to be paid to **Owner**, for which payment well and truly to be made, we do bind ourselves, our and each and every of our heirs, executors, administrations, successors and assigns, jointly and severally, for and in the whole firmly by these presents.

Sealed with our seals and dated this _____ day of_____, 20__.

NOW THE CONDITION OF THIS OBLIGATION IS SUCH, that if **Principal**, who has been awarded by **Owner** that certain contract known as Contract No. _____dated the _____ day of _____, 20__ (the "Contract"), which Contract is incorporated herein by reference, shall well and truly pay all and every person furnishing materials or performing labor or service in and about the performance of the work under the Contract, all and every sums of money due him, her, them or any of them, for all such materials, labor and service for which **Principal** is liable, shall make good and reimburse **Owner** sufficient funds to pay such costs in the completion of the Contract as **Owner** may sustain by reason of any failure or default on the part of **Principal**, and shall also indemnify and save harmless **Owner** from all costs, damages and expenses arising out of or by reason of the performance of the Contract and for as long as provided by the Contract; then this obligation shall be void, otherwise to be and remain in full force and effect.

Surety, for value received, for itself and its successors and assigns, hereby stipulates and agrees that the obligation of **Surety** and its bond shall be in no way impaired or affected by any extension of time, modification, omission, addition or change in or to the Contract or the work to be performed thereunder, or by any payment thereunder before the time required therein, or by any waiver of any provisions thereof, or by any assignment, subletting or other transfer thereof or of any work to be performed or any monies due or to become due thereunder; and **Surety** hereby waives notice of any and all such extensions, modifications, omissions, additions, changes, payments, waivers, assignments, subcontracts and transfers and hereby expressly stipulates and agrees that any and all things done and omitted to be done by and in relation to assignees, subcontractors, and other transferees shall have the same effect as to **Surety** as though done or omitted to be done by or in relation to **Principal**.

Surety hereby stipulates and agrees that no modifications, omission or additions in or to the terms of the Contract shall in any way whatsoever affect the obligation of **Surety** and its bond.

Any proceeding, legal or equitable, under this Bond may be brought in any court of competent jurisdiction in the State of Delaware. Notices to **Surety** or Contractor may be mailed or delivered to them at their respective addresses shown below.

IN WITNESS WHEREOF, **Principal** and **Surety** have hereunto set their hand and seals, and such of them as are corporations have caused their corporate seal to be hereto affixed and these presents to be signed by their duly authorized officers, the day and year first above written.

PRINCIPAL

Name: _____

Witness or Attest: Address: _____

_____ By: _____(SEAL)
Name: Name:
Title:

(Corporate Seal)

SURETY

Name: _____

Witness or Attest: Address: _____

_____ By: _____(SEAL)
Name: Name:
Title:

(Corporate Seal)

END OF SECTION

SECTION 23 73 13

MODULAR CENTRAL-STATION AIR-HANDLING UNITS

PART 1 GENERAL

1.01 SECTION INCLUDES

A. Casing construction.

B. Fan section.

C. Coil section.

D. Damper section.

E. Controls.

1.02 RELATED REQUIREMENTS

A. Section 23 05 13 - Common Motor Requirements for HVAC Equipment.

B. Section 23 05 48 - Vibration and Seismic Controls for HVAC Piping and Equipment.

C. Section 23 09 69 - Variable Frequency Controllers

D. Section 23 07 19 - HVAC Piping Insulation.

E. Section 23 40 00 - HVAC Air Cleaning Devices.

1.03 REFERENCE STANDARDS

A. AMCA (DIR) - [Directory of] Products Licensed Under AMCA International Certified Ratings Program; http://www.amca.org/certified/search/company.aspx.

B. AMCA 99 - Standards Handbook; 2010.

C. AMCA 210 - Laboratory Methods of Testing Fans for Certified Aerodynamic Performance Rating; 2007.

D. AMCA 300 - Reverberant Room Method for Sound Testing of Fans; 2014.

E. AMCA 301 - Methods for Calculating Fan Sound Ratings from Laboratory Test Data; 2014.

F. AMCA 500-D - Laboratory Methods of Testing Dampers for Rating; 2012.

G. ASHRAE Std 90.1 - Energy Standard for Buildings Except Low-Rise Residential Buildings; 2013, Including All Addenda.

1.04 ADMINISTRATIVE REQUIREMENTS

A. Coordinate the work with other trades for installation of roof mounted air handling units on roof curbs.

B. Preinstallation Meeting: Conduct a preinstallation meeting one week prior to the start of the work of this section; require attendance by all affected installers.

C. Sequencing: Ensure that utility connections are achieved in an orderly and expeditious manner.

1.05 SUBMITTALS

A. See Section 01 30 00 - Administrative Requirements, for submittal procedures.

B. Product Data:
   1. Published Literature: Indicate dimensions, weights, capacities, ratings, gages and finishes of materials, and electrical characteristics and connection requirements.
   2. Filters: Data for filter media, filter performance data, filter assembly, and filter frames.
   3. Fans: Performance and fan curves with specified operating point clearly plotted, power, RPM. Both maximum and minimum operation points are to be included on curve.
   4. Sound Power Level Data: Fan outlet and casing radiation at rated capacity.
   5. Electrical Requirements: Power supply wiring including wiring diagrams for interlock and control wiring, clearly indicating factory-installed and field-installed wiring.

C. Sustainable Design Documentation: Submit manufacturer's product data on refrigerant used, showing compliance with specified requirements.

D. Shop Drawings: Indicate assembly, unit dimensions, weight loading, required clearances, construction details, field connection details, and electrical characteristics and connection requirements.

E. Manufacturer's Instructions: Include installation instructions.

F. Maintenance Data: Include instructions for lubrication, filter replacement, motor and drive replacement, spare parts lists, and wiring diagrams.

G. Maintenance Materials: Furnish the following for State of Delaware OMB - Division of Facilities Management's use in maintenance of project.
   1. See Section 01 60 00 - Product Requirements, for additional provisions.
   2. Extra Fan Belts: One set for each unit.
   3. Extra Filters: One set for each unit.

1.06 QUALITY ASSURANCE

A. Manufacturer Qualifications: Company specializing in manufacturing the type of products specified in this section, with minimum three years of documented experience.

1.07 REGULATORY REQUIREMENTS

A. Products Requiring Electrical Connection: Listed and classified by Underwriters Laboratories Inc. as suitable for the purpose specified and indicated.

1.08 DELIVERY, STORAGE, AND HANDLING

A. Accept products on site in factory-fabricated protective containers, with factory-installed shipping skids and lifting lugs. Inspect for damage.

B. Store in clean dry place and protect from weather and construction traffic. Handle carefully to avoid damage to components, enclosures, and finish.

C. Do not operate units until ductwork is clean, filters are in place, bearings lubricated, and fan has been test run under observation.

1.09 WARRANTY

A. See Section 01 78 00 - Closeout Submittals, for additional warranty requirements.

B. Provide minimum five year manufacturer warranty covering repair or replacement due to defective materials or workmanship.

PART 2 PRODUCTS

2.01 MANUFACTURERS

A. Daikin Applied: www.daikinapplied.com.

B. United CoolAir: www.unitedcoolair.com

C. AboveAir Technologies: www.aboveair.com

D. Substitutions: See Section 01 60 00 - Product Requirements.

2.02 UNIT CONFIGURATION

A. The unit shall consist of the following components:
   1. Supply Fan
   2. Water Cooled Compressor
   3. Evaporator Coil
   4. Filter Section

2.03 CASING CONSTRUCTION

A. Full Perimeter Base Rail:
   1. Construct of galvanized steel.

2. Provide base rail of sufficient height to raise unit for external trapping of condensate drain pans.

B. Cabinet:
1. Cabinet shall be unpainted non-weatherized and constructed of scratch resistant heavy duty galvanized G90 steel.
2. Cabinet shall be modular in construction, shipped in multiple sections, on separate skids, depending on unit size in order to facilitate rigging and placement.
3. Cabinet access panels shall fit into recessed pockets within the cabinet structure and held in place with screws. Recessed areas will be lined with flexible gasket to minimize air leakage.
4. Unit shall be provided with removable hinged doors to provide access to variable frequency drive and controls. Hinges shall be fiberglass reinforced thermoplastic. Access doors shall have tool operated compression latches. Access doors shall be lined with flexible gasket to minimize air leakage.
5. Panels and doors shall allow access to key internal components to facilitate installation, maintenance and servicing of the unit.
6. All duct flanges shall be factory installed on each unit prior to shipment.
7. Water piping shall be wrapped in a material that hinders any formation of condensate on the piping.
8. All individual sections comprising a module are to be joined using cabinet section connectors to insure perfect alignment during factory and field assembly.
9. Elastomeric Foam Insulation – Cabinet and removable doors and panels shall be lined with a flexible, closed-cell elastomeric insulation in sheet form. Insulation materials shall have a closed-cell structure to prevent moisture from wicking. Materials shall have a maximum water vapor transmission of 0.08 perm-inches when tested in accordance with ASTM E 96, Procedure A, latest revision. Insulation material shall be manufactured without the use of CFC's, HFC's or HCFC's. Insulation shall be formaldehyde free, low VOC's, fiber free, dust free and shall resist mold and mildew. Materials shall have a flame spread index of less than 25 and a smoke-developed index of less than 50 when tested in accordance with ASTM E 84, latest revision. Materials shall have a maximum thermal conductivity of 0.27 Btu-in./h-ft2-°F at a 75 °F mean temperature when tested in accordance with ASTM C 177 or ASTM C 158, latest revisions.

2.04 REFRIGERATION CIRCUIT

A. Each refrigerant circuit shall be provided with high and low side Schrader access valves, sight glass with integral moisture indicator, filter drier, maximum operating pressure (MOP) expansion valve with external equalizer line, manual reset high and auto-reset low pressure safety switches.

B. Each refrigerant circuit will be factory leak tested, evacuated, and charged with R-410A refrigerant prior to shipment. No field piping, brazing, evacuation or refrigerant charging shall be required.

C. Each separate section containing refrigerant circuit components shall be provided with resealable refrigerant fittings in order to preserve the factory refrigerant charge and to facilitate assembly of sections without loss of the refrigerant circuit integrity.

D. Each refrigerant circuit shall be provided with a factory installed pressure actuated hot gas bypass valve capability that diverts a portion of discharge gas directly into the inlet of the evaporator coil.

E. Manual Hot Gas Bypass Shut Off Valves Unit shall include manual shutoff valves on hot gas bypass lines to be used for isolation of the hot gas bypass capability during unit start-up, testing, or maintenance.

2.05 COMPRESSORS

A. Compressor shall utilize internal spring vibration isolators and external rubber in shear (RIS) mounting to minimize sound and vibration transmission.

B. Units with multiple compressors shall have separate independent refrigerant circuits.

C. Staging of the compressors shall be controlled by the microprocessor based on the supply air temperature.

2.06 EVAPORATOR COIL SECTION

A. The direct expansion evaporator coil shall be configured for draw-thru airflow design for uniform air distribution across the coil face. It shall be made with heavy wall rifled seamless copper tubes mechanically expanded into tempered aluminum fins with corrugated fin design and drawn self-spacing collars. Coil end sheets shall be hot-dipped galvanized. All coils shall be factory leak checked under pressure.

B. Coils shall be interlaced, 4 rows deep with no more than 12 FPI, for uniform performance and optimum part load and humidity operation.

C. The evaporator coil shall utilize a distributor with suitable porting for injection of hot gas bypass. Maximum Operating Pressure (MOP) externally equalized balance port thermostatic expansion valves, externally equalized, shall feed each circuit in the evaporator coil.

D. Evaporator coil section shall be equipped with a 304 stainless steel drain pan. Drain pan shall extend to the entire length and width of the evaporator coil. Units shall have a single 1-1/4” NPT condensate drain connection for each module.

E. Evaporator section air path shall be as shown on project drawings.

2.07 WATER - COOLED CONDENSING SECTION

A. The water condenser coils shall be a co-axial counter-flow refrigerant type. The condensers shall be selected to maintain low refrigerant operating pressure, while using a minimum quantity of water. Maximum working pressures shall not exceed 450 psig water side, 650 psig refrigerant side.

B. All co-axial heat exchanger water channels shall be fabricated with spiral tubing fabricated out of non-ferrous tubing. Heat exchangers shall incorporate longitudinal fins, spirally-wound and soldered to the inner tube with an outer tube serving as a shell.

C. Each system shall be controlled by a single water regulating valve with a modulating direct coupled non spring return actuator. Valve shall regulate fluid flow to control refrigerant head pressure. Valve shall be connected to cooling fluid piping using threaded connections. Valve shall be 3-way pressure actuated configuration. Valve shall be rated for a 350 psig fluid pressure circuit.

D. Shell and Tube Condenser The horizontal shell and tube condensers shall have removable heads with mechanically cleanable tubes. Heat exchangers shall be fabricated to meet ASME certified standards. Condensers shall be designed for 150 psig cooling fluid side pressure and 600 psig for the refrigerant side pressure. Condensers shall be constructed of heavy duty steel enclosures with steel tube sheets, steel heads and heavy wall enhanced copper tube geometry. Removable, epoxy coated, heads shall have high quality replaceable gaskets. Shell and tube condensers shall have epoxy coated tube sheets to prevent pitting caused by galvanic action. Tube sheets, water and refrigerant fittings are to be machine welded. Tubes shall be rolled into tube sheets. Each condenser shall be equipped with a SAE flare connection high pressure relief valve. Condensers shall be piped with threaded couplings for easy removal of fluid piping for mechanical cleaning

2.08 BLOWER MOTOR

A. Units with the Direct Drive Parallel Fan (DDP) system shall consist of dual fans in each module. A single VFD shall be used to drive the dual fans and shall not have any speeds blocked out.

B. The blower assembly shall be direct driven non-overloading type backward inclined unhoused fans. The fan shall incorporate a corrosion resistant aluminum impeller with extruded airfoil shaped blades which are continuously welded. The front panel shall have a removable inlet cone.

C. Blower assemblies shall be mounted on a galvanized steel frame and front panel. The design shall insure structural integrity of the base to minimize any vibration. The motor base shall insure proper alignment to the fan wheel, motor and inlet cone.

D. The fans shall be dynamically balanced as a complete unit in accordance with ISO 1940, to achieve Balance Quality Grade G6.3 for the rotating assembly of fan and motor. Balance readings are to be made electronically in the axial, vertical and horizontal planes. The wheels shall not have any resonant conditions across the entire operating range.

E. The fans shall be secured to the motor shaft using taper lock bushings. Wheel hubs are to be machined aluminum. Wheels and hubs shall not require any finish coating.

F. The motor shall meet or exceed EISA 2007 efficiencies. Motors are to be NEMA rated as Open Drip Proof (ODP) with a 1.25 service factor

2.09 ELECTRICAL SYSTEM

A. The electrical system shall conform to National Electric Code (NEC) requirements.

B. Power connection shall be through the side of the unit to power terminal block. Single point power connection shall be used.

C. All controls shall be 24 volts and shall be factory mounted and wired, except as noted.

D. All electrical components (blower motors, compressors, electric heat stages, etc.) shall have individual definite purpose contactors.

E. Each component shall be safety agency listed as required. All components shall be identified to co-ordinate with the wiring diagram provided.

F. The control panel shall be isolated so that access can be made without disrupting unit operation. The hinged control panel door shall have tool operated latches.

2.10 EVAPORATOR AIR FILTRATION

A. The filter frame shall be mounted directly to the unit and shall be accessible from either side. Slides shall be provided within the filter frame for easy removal of all the filters. Filters shall also be able to be removed or installed from the face of the filter frame for those units that do not incorporate a return air duct.

B. Evaporator air filters shall be nominal 2” depth pleated, throwaway type panel filters consisting of cotton and synthetic or synthetic only media with galvanized expanded metal backing and moisture resistant enclosing frame. The filter shall be classified for flammability by Underwriters Laboratories, Inc. as Class 2.

C. The filter media shall have an efficiency of MERV 8 based on ASHRAE test standard 52.2.

D. The filter face area shall contain not less than 10 pleats per lineal foot. Media support shall be heavy gauge expanded, electro-galvanized metal with grid members being no less than 0.025”wide, providing an open area of not less than 96%. The grid shall be 100% bonded to the media on the air exiting side to eliminate media vibration and pull-away. The grid shall be formed to provide a uniform V-shaped pleat with the open area on the air exiting matched to the open area on the air entering side for maximum utilization of the media and low airflow resistance. The enclosing frame shall be constructed of a rigid, high wet strength board

2.11 CONTROLS

A. The VFD shall be provided by the controls contractor and shall be coordinated with the manufacturer prior to final equipment submittals. VFD shall be in accordance with section 23 09 69.

B. Each compressor shall be provided with its own contactor that breaks all phases of power. The microprocessor control shall provide anti-short cycle protection for each compressor. The refrigerant circuits shall be protected with high and low pressure switches. Upon opening, a signal will be provided to the microprocessor for an alarm signal and the unit will be shut down. The standard air flow proving switch must be satisfied before the compressors can be started.

C. Where two compressors make up a stage of cooling, a time delay shall be incorporated into the controls to delay the start of the second compressor.

D. A factory installed drain pan overflow switch shall be provided. This device will sense an above normal condensate level and send a signal to the microprocessor. This will shut the unit down and provide an alarm signal.

E. Contact terminals - Contact terminals are to be provided for remote On / Off, Common Alarm, or other conditions or functions as desired.

F. Dry Contacts - Unit shall include 3 sets of dry electrical contacts for field connection to auxiliary devices furnished by others.

G. Water Flow Switch - A field supplied and installed water flow switch shall be included in the unit controls. If adequate water flow is not proven, the controls shall not allow system operation. An alarm shall be enunciated. The water flow switch shall be wired to factory mounted terminals.

H. Freezestat - Factory installed freezestats shall be included. The freezestats shall be fully encapsulated, automatic reset type, clamped to each compressor suction line. Upon opening, the compressor shall be shut down and the blower shall continue to run until the freezestat resets.

I. Smoke Detector - A factory supplied smoke detector shall be shipped loose for field installation in the supply and return air duct and wired to the unit electrical control panel. Upon activation, this control will terminate system operation.

2.12 FAN SECTION

A. Type: Airfoil or backward inclined single width, single inlet, centrifugal plug type fan, in compliance with AMCA 99.

B. Performance Ratings: Determined in accordance with AMCA 210 and labeled with AMCA Certified Rating Seal.

C. Sound Ratings: AMCA 301; tested to AMCA 300 and label with AMCA Certified Sound Rating Seal.

D. Bearings: Self-aligning, grease lubricated, with lubrication fittings extended to exterior of casing with plastic tube and grease fitting rigidly attached to casing.

E. External Motor Junction Box: Factory mount NEMA 4 external junction box and connect to extended motor leads from internally mounted motors.

F. Motor Wiring Conduit: Factory wire fan motor wiring to the unit mounted external motor junction box.

G. Fan Accessories:

H. Flexible Duct Connections:
   1. For separating fan, coil, and adjacent sections.

I. Drives:
   1. Comply with AMCA 99.

J. Shafts: Solid, hot rolled steel, ground and polished, with key-way, and protectively coated with lubricating oil.

2.13 DAMPER SECTION

A. Mixing Section: Provide a functional section to support the damper assembly for modulating the volume of outdoor and return air.

B. Damper Blades:
   1. Double-skin airfoil design with metal, compressible jamb seals and extruded-vinyl blade-edge seals on all blades.
   2. Self-lubricating stainless steel or synthetic sleeve bearings.
   3. Comply with ASHRAE 90.1 for rated maximum leakage rate.

4. Base all leakage testing and pressure ratings on AMCA 500-D.
5. Arrange in parallel or opposed-blade configuration.

PART 3 EXECUTION

3.01 INSTALLATION

A. Install in accordance with manufacturer's instructions.

B. Isolate fan section with flexible duct connections.

C. Install flexible duct connections between fan inlet and discharge ductwork and air handling unit sections. Ensure that metal bands of connectors are parallel with minimum one inch flex between ductwork and fan while running.

D. Install assembled unit on vibration isolators. Install isolated fans with resilient mountings and flexible electrical leads. Install restraining snubbers as indicated. Refer to Section 23 05 48. Adjust snubbers to prevent tension in flexible connectors when fan is operating.

E. Provide variable sheaves required for final air balance.

F. Make connections to coils with unions or flanges.

3.02 SYSTEM STARTUP

A. Provide manufacturer's field representative to perform systems startup.

B. Prepare and start equipment and systems in accordance with manufacturers' instructions and recommendations.

C. Adjust for proper operation within manufacturer's published tolerances.

3.03 CLOSEOUT ACTIVITIES

A. See Section 01 78 00 - Closeout Submittals, for closeout submittals.

B. See Section 01 79 00 - Demonstration and Training, for additional requirements.

C. Training: Train State of Delaware OMB - Division of Facilities Management's personnel on operation and maintenance of system.
   1. Use operation and maintenance manual as training reference, supplemented with additional training materials as required.
   2. Provide minimum of one day of training.
   3. Instructor: Manufacturer's training personnel.
   4. Location: At project site.

END OF SECTION

SECTION 23 81 24

COMPUTER ROOM AIR CONDITIONERS - FLOOR MOUNTED

PART 1 GENERAL

1.01 SECTION INCLUDES

A. Air conditioning units.

B. Controls and control panels.

1.02 RELATED REQUIREMENTS

A. Section 23 05 13 - Common Motor Requirements for HVAC Equipment:

B. Section 23 40 00 - HVAC Air Cleaning Devices

C. Section 26 05 83 - Wiring Connections: Electrical characteristics and wiring connections.

1.03 REFERENCE STANDARDS

A. NFPA 90A - Standard for the Installation of Air-Conditioning and Ventilating Systems; 2015.

1.04 SUBMITTALS

A. See Section 01 30 00 - Administrative Requirements, for submittal procedures.

B. Product Data: Provide for manufactured products and assemblies. Indicate water, drain, refrigeration, rough-in connections, and electrical characteristics and connection requirements.

C. Manufacturer's Instructions: Indicate assembly, support details, connection requirements, and include start-up instructions.

D. Manufacturer's Field Reports: Indicate conditions at initial start-up including date, and initial set points.

E. Operation and Maintenance Data: Include manufacturer's descriptive literature, operating instructions, installation instructions, and maintenance and repair data.

F. Warranty: Submit manufacturer's warranty and ensure forms have been filled out in State of Delaware OMB - Division of Facilities Management's name and registered with manufacturer.

G. Maintenance Materials: Furnish the following for State of Delaware OMB - Division of Facilities Management's use in maintenance of project.
   1. See Section 01 60 00 - Product Requirements, for additional provisions.
   2. Extra Filters: One set for each individual unit.

1.05 QUALITY ASSURANCE

A. Manufacturer Qualifications: Company specializing in manufacturing the type of products specified in this section, with minimum three years of documented experience.

B. Products Requiring Electrical Connection: Listed and classified by Underwriters Laboratories Inc. as suitable for the purpose specified and indicated.

1.06 WARRANTY

A. See Section 01 78 00 - Closeout Submittals, for additional warranty requirements.

B. Warranty: Include coverage of entire unit for five years.

PART 2 PRODUCTS

2.01 MANUFACTURERS

A. AboveAir Technologies; www.aboveair.com

B. Liebert, a brand of Vertiv Co: www.vertivco.com/#sle.

C. Substitutions: See Section 01 60 00 - Product Requirements.

2.02 AIR CONDITIONING UNITS

A. Description: Packaged, water cooled, factory assembled, pre-wired and pre-piped unit, consisting of cabinet, fans, filters, and controls.

B. Assembly: Up-flow air delivery, in draw-through configuration.

C. Energy Efficiency:

2.03 CABINET AND FRAME

A. Insulation: Thermally and acoustically line cabinet interior with 1 inch thick acoustic duct liner.

B. The cabinet chassis and access panels shall be power-coat painted heavy guage galvanneal steel for decor matching and corrosion resistance.

C. Cabinet access panels shall rest in recessed pockets designed for minimum air leakage.

D. The cabinet and access panels shall be lined with 2 lb/ft2 high density sound and thermal insulation and sealed with self-extinguishing gasketing conforming to NFPA 90A and 90B.

E. The unit shall be serviceable through front access panels with quick-release quarter-turn fasteners.

2.04 EVAPORATOR FANS AND MOTORS

A. Fans: Double inlet, airfoil or backward inclined fans, statically and dynamically balanced, directly driven.

2.05 COMPRESSORS

A. Compressors: Individually serviceable without dismantling other components.

B. Refrigeration Circuits: Two, each with hot gas mufflers, thermal expansion valve with external equalizer, liquid line solenoid valve, liquid line filter-drier, refrigerant sight glass with moisture indicator, service shut-off valves and charging valves and accumulator sized for liquid seal under light load.

2.06 EVAPORATOR COILS

A. Coil shall be constructed of copper tubes and aluminum fins. The system shall be designed for a draw-through air pattern for maximum heat transfer. Coil end plates shall be hot dipped galvanized.

B. The evaporator coil shall be mounted in an insulated stainless steel condensate drain pan.

2.07 CONDENSERS

A. Water Cooled: Coaxial tube in tube type with liquid line stop valve and head pressure actuated water regulating valve. Terminate outside cabinet for easy external connections.

2.08 FILTERS

A. Filters shall be 1" thick pleated.

B. Rating, ASHRAE Std 52.2:
   1. Rated for 30% dust spot efficiency.

2.09 ELECTRICAL PANEL

A. Unit shall be provided with a single point main power connection.

B. The electrical system shall conform to National Electric Code (NEC) requirements according to UL 1995.

C. The control circuit shall be a 24 VAC low voltage circuit.

2.10 ELECTRONIC CONTROL SYSTEM

A. Provide with controller to interface with building automation system (BAS). Provide BACnet commincation interface.

B. Factory controls shall control refrigeration system and monitor alarms.

C. BAS shall enable/disable unit and provide setpoints.

PART 3 EXECUTION

3.01 EXAMINATION

A. Verify that proper power supply is available and of the correct characteristics.

3.02 INSTALLATION

A. Install in accordance with manufacturer's instructions.

B. Coordinate installation of computer room air conditioning units with computer room raised floor.

C. Install unit on vibration isolators, refer to section 23 05 48.

D. Provide shut-off valves in condenser water inlet and outlet piping on water cooled units below raised floor.

3.03 FIELD QUALITY CONTROL

A. Provide the services of the manufacturer's field representative to start and adjust systems and equipment and instruct operating personnel.

B. Prepare and start equipment and systems in accordance with manufacturers' instructions and recommendations.

3.04 CLOSEOUT ACTIVITIES

A. See section 01 78 00 - Closeout Submittals, for closeout submittals.

B. See section 01 79 00 - Demonstration and Training, for additional requirements.

C. Training: Train State of Delaware OMB - Division of Facilities Management's personnel on operation and maintenance of system.
   1. Use operation and maintenance manual as training reference, supplemented with additional training materials as required.
   2. Provide minimum of 4 hours of training.
   3. Instructor to be manufacturer's training personnel.
   4. Location: At project site.

END OF SECTION

SECTION 27 10 00
STRUCTURED CABLING

PART 1 GENERAL

1.01 RELATED REQUIREMENTS

A. Section 07 84 00 - Firestopping.

1.02 REFERENCE STANDARDS

A. Delaware Sate-Wide Information Techanology and Architecture Standards (NE-Cabling-002)

B. Delaware Sate-Wide Information Techanology and Architecture Standards (AC-Wireless-001)

C. NFPA 70 - National Electrical Code; Most Recent Edition Adopted by Authority Having Jurisdiction, Including All Applicable Amendments and Supplements.

D. TIA-607 - Generic Telecommunications Bonding and Grounding (Earthing) for Customer Premises; 2015c, with Addendum (2017).

E. ANSI/J-STD-607 - Commercial Building Grounding (Earthing) and Bonding Requirements for Telecommunications; Rev A, 2002.

1.03 SUBMITTALS

A. See Section 01 30 00 - Administrative Requirements, for submittal procedures.

B. Product Data: Provide manufacturer's standard catalog pages and data sheets for each product.
   1. Storage and handling requirements and recommendations.
   2. Installation methods.

C. Shop Drawings: Show compliance with requirements on isometric schematic diagram of network layout, showing cable routings, telecommunication closets, rack and enclosure layouts and locations, service entrance, and grounding, prepared and approved by BICSI Registered Communications Distribution Designer (RCDD).

D. Manufacturer Qualifications.

E. Evidence of qualifications for installer.

F. Project Record Documents: Prepared and approved by BICSI Registered Communications Distribution Designer (RCDD).
   1. Record actual locations of outlet boxes and distribution frames.
   2. Show as-installed color coding, pair assignment, polarization, and cross-connect layout.
   3. Identify distribution frames and equipment rooms by room number on drawings.

G. Operation and Maintenance Data: List of all components with part numbers, sources of supply, and operation and maintenance instructions; include copy of project record documents.

1.04 QUALITY ASSURANCE

A. Manufacturer Qualifications: At least 3 years experience manufacturing products of the type specified.

B. Installer Qualifications: A company having at least 3 years experience in the installation and testing of the type of system specified, and:
   1. Employing a BICSI Registered Communications Distribution Designer (RCDD).
   2. Supervisors and installers factory certified by manufacturers of products to be installed.

1.05 DELIVERY, STORAGE, AND HANDLING

A. Store products in manufacturer's unopened packaging until ready for installation.

B. Keep stored products clean and dry.

1.06 WARRANTY

A. See Section 01 78 00 - Closeout Submittals, for additional warranty requirements.

B. Correct defective Work within a 2 year period after Date of Substantial Completion.

PART 2 PRODUCTS

2.01 NETWORK CABLING AND EQUIPMENT

A. The contractor shall refer to Delaware Sate-Wide Information Techanology and Architecture Standards (NE-Cabling-002) for product requirements for cabling and equipment.

B. Network switches shall be CISCO Catatlyst 3850 series.

2.02 WIRELESS ACCESS POINT

A. The contractor shall refer to Delaware Sate-Wide Information Techanology and Architecture Standards (AC-Wireless-001) for product requirements for installaiton of wireless access points.

B. Wireless access points shall be Aerohive AP250 or Cisco Aironet 1852i as indicated in AC-Wireless-001.

Standard ID:	**NE-Cabling-002**
Title:	**Structured Cabling System Standards and Specifications for State-Managed Facilities**
Domain:	**Network and Storage**
Discipline:	**Cabling**
Revision Date: Revision no.: Original date:	**1/8/2016** **6** **7/21/2008**

A. Authority: Title 29, Chapter 90C provides broad statutory authority to the Department of Technology and Information to implement statewide and interagency technology solutions, policy, standards and guidelines for the State of Delaware's technology infrastructure. "Technology" means computing and telecommunications systems, their supporting infrastructure and interconnectivity used to acquire, transport, process, analyze, store and disseminate information or data electronically. The term "technology" includes systems and equipment associated with e-government and Internet initiatives.

B. Applicability: Applies to all State of Delaware communications and computing resources. DTI is an Executive Branch Agency and has no authority over the customers in Legislative and Judicial Branches, as well as School Districts, and other Federal and Local Government entities that use these resources. However, all users, including these entities, must agree to abide by all policies, standards promulgated by DTI as a condition of funding, access and continued use of these resources.

C. Purpose: Cable configuration and installation is critical to providing connectivity in State buildings. This standard provides guidance for the design and installation of cabling. This standard provides guidance and requirements for data, voice, and CATV structured cabling systems and support infrastructure in all State owned and leased facilities and buildings.

Table of Contents

PART 1 Scope 3
PART 2 Process 3
PART 3 Executive Summary 3
PART 4 Objective 4
PART 5 Credits 5
PART 6 Introduction 5
PART 7 Procedures 8
PART 8 Horizontal Distribution System 9
PART 9 Communications/Data Rooms/Closets (General) 11
PART 10 MDF & IDF Product Specifications 25
PART 11 Information Outlets 37
PART 12 Cable Routing Systems 42
PART 13 Cabling-General 43
PART 14 Horizontal CABLING - Category 6 UTP Data 44
PART 15 Vertical Distribution Systems 47
PART 16 Campus Cabling 50
PART 17 Patch Cables 51
PART 18 Fire Stop - Penetration Sealant 55
PART 19 Testing 55
PART 20 Appendix A – Communications Planning Checklist 60
PART 21 Appendix B - Cable Installation Checklist 61
PART 22 Appendix C - Quality Assurance 62
PART 23 Appendix D - Codes, Regulations and Standards 63
PART 24 Appendix E - Warranty 63
PART 25 Appendix F - Bid/Quote Response Format 63
PART 26 Appendix G - Outside - DELDOT Specific Requirements - Traffic Construction 65
PART 27 Appendix H - Certified Contractor List 69

PART 1 SCOPE

A. Areas Covered: This standard covers the best practices and installation requirements for Voice, Data, CATV cabling and support structures including conduits and raceways, Voice and Data rooms and closets.

B. Environments: This standard applies to all State owned and leased building and office spaces. It is concerned with all Data, Voice and CATV cabling projects, whether they are for new construction or revisions additions and upgrades to existing systems.

PART 2 PROCESS

A. Adoption: These standards have been adopted by the Department of Technology and Information (DTI) through the Technology and Architecture Standards Committee (TASC) and are applicable to all Information Technology use throughout the State of Delaware.

B. Revision: Technology is constantly evolving; therefore, the standards will need to be regularly reviewed. It is the intent of the TASC to review each standard annually. The TASC is open to suggestions and comments from knowledgeable individuals within the State, although we ask that they be channeled through your Information Resource Manager (IRM).

C. Contractors: Contractors or other third parties are required to comply with these standards when proposing technology solutions to DTI or other State entities. Failure to do so could result in rejection by the Delaware Technology Investment Council. For further guidance, or to seek review of a component that is not rated below, contact the TASC at dti_tasc@state.de.us.

D. Implementation responsibility: DTI and/or the organization's technical staff will implement these best practices during the course of normal business activities, including business case review, architectural review, project execution and the design, development, or support of systems.

E. Enforcement: DTI will enforce these best practices during the course of normal business activities, including business case and architectural review of proposed projects and during the design, development, or support of systems. These best practices may also be enforced by others during the course of their normal business activities, including audits and design reviews.

F. Contact us: Any questions or comments should be directed to dti_tasc@state.de.us.

PART 3 EXECUTIVE SUMMARY

Because of ever-advancing Industry Standards and new Alliances between Cable and Hardware Manufactures and Vendors, this document seeks to enhance and clarify the State of Delaware's wiring and cabling standards and specifications for Structured Cabling Systems. Approved Contractors under State of Delaware Contract # 05-441-TL are required to adhere to these specifications and standards.

The structured cabling system will support Voice, Data, and imaging applications within State-owned and -leased office facilities. This document describes the Structured Cabling System requirements to be met in the proposals for Communications cabling by Vendors and Contractors. These requirements encompass all materials, design, engineering, installation, supervision, and training services for a Structured Cabling System.

The following are examples of the Structured Cabling Systems that can be bid for new construction and whole building renovations, in which case all building structured cabling wiring is replaced. The choice of a Structured Cabling System is not limited to the Vendors or Manufactures listed below. The Channel Solutions shall be bid when possible. If a Link solution is bid the State Contact, PM, or DTI (Department of Technology and Information) must authorize the installation.

In new construction projects, the default cabling infrastructure shall be Category 6 unless specified otherwise. Where building renovations and additions do not require the removal of the existing structured cabling system, the existing cabling in conjunction with new cabling should maintain the system warranties. If the existing structured cabling system is not Category 5e or better, it must be upgraded to CAT6 or better with a matching patch panel.

- Hubbell Premise Wiring
- Ortronics
- Panduit
- Systimax
- Leviton

A. Terms and Conditions of Bids/quotes

1. An approved Contractors bid submittal should be based on the materials, systems, equipment, and Standards described in this document and in the bid response format of the attached example. Refer to Appendix G. All bids must be submitted in accordance with the specifications and information contained herein, as well as with any addenda, if required.
2. The bid package shall be accompanied by a presale warranty commitment, binding the Installation Contractor and Manufacturer to the customer-selected extended warranty package as described in State Contract # 05-441-TL page 21 section 3) paragraph b).
3. At any point in time, should you require clarification or have any questions pertaining to the content of this document, please call The State of Delaware Department of Technology and Information (DTI). 302-739-9500

PART 4 OBJECTIVE

This document has been developed as a source of information to assist in the design, implementation and maintenance of Voice, Data and Broad Band communications systems. It contains standards and specifications which guide users through structured cabling system design, planning, and installation.

To maximize the usefulness of this document, access to the various TIA/EIA (Telecommunications Industry Association/Electronic Industries Alliance), IEEE (Institute of Electrical and Electronics Engineers), BISCI, (Building Industry Consulting Service International), NEC (National Electrical Code), NFPA (National Fire Protection Association) Communications Standards, and implementation and installation Manuals for further reference is required. This document assumes that users have communications knowledge and training in all aspects of design, implementation, installation, and testing of a Voice/Data communications system.

This document does not address safety issues associated with use. It is the individual's responsibility to use established and appropriate safety and health practices and to determine the applicability of all regulations.

PART 5 CREDITS

Communications Cabling Construction
Developed by:
State of Delaware Department of Technology & Information
801 Silver Lake Blvd. Dover, DE
19904

The content of this document is drawn from experience, as well as other documents and manuals, including the following:

- NEC 2011/2013 Code book
- NFPA-70 Publications
- TIA/EIA Communications Building Wiring Standards
- IEEE Publications & Standards
- BICSI Communications Distribution Design and Installation Publications
- MOTOROLA R56 Standards and Guideline for Communications
- Various Manufactures Publications and Requirements

PART 6 INTRODUCTION

Any Structured Universal Cabling System installed for the Agencies of the State of Delaware is designed to meet known and anticipated technology needs within the State. An advanced building cabling system provides for more than communication services; it provides an infrastructure for an institution's entire communications network. Instead of being a basic utility, it is as important as the high-tech systems that transmit signals over it and is an integral component of the State's overall information network.

These designs provide a universal and flexible cabling system for workstations, conference rooms, and laboratories. Today's cabling system must be multi- functional and provide service for telephones, computers, fax machines, LANs, WANs, broad band fiber optic and coaxial systems (CATV, SATV, CCTV.), Data Centers, computer-aided design workstations, Audio Video systems (AV), and other technologies. For a cabling system to be capable of meeting today's technology and institutional demands, it must have high bandwidth capacity and transmission speed while being extremely flexible.

This wiring architecture incorporates the applicable ANSI/EIA/TIA standards, BICSI guidelines and the latest technologies. This cabling distribution plan can integrate all types of systems from a variety of vendors. The design uses a subsystem approach, which allows for changes in the system without affecting other parts of the system. The Main Distribution Frame (MDF) and Intermediate Distribution Frame (IDF) Room equipment racks are designed to allow for growth, and the cable routing is accomplished through the provision of cable trays, conduits, sleeves, raceways, and cable hangers where required. Ease of administration and recordkeeping for moves and changes is readily apparent, as is the flexibility that a structured cabling system provides.

The wiring medium for the Communications Cable Network consists of Category 6 – 6a 24AWG Unshielded Twisted Pair (UTP) for station cabling and multi pair twisted copper for backbone cabling to support low-speed voice or Data, Category 6 or 6a for high speed LAN technologies, and 50/125 micron multi-mode fiber optic cable and 50/125 micron multi-mode for even higher bandwidth requirements. The unshielded twisted pair (UTP) Category 6 or 6a LAN cables can support Data transmission rates of 100, 250 and 500 Mb/Sec

respectively according to EIA/TIA Standards and manufacturers' specifications. These leading edge components, combined with the open wiring architecture, provide the technology, flexibility, and modularity that allow the system to grow and change to meet changing needs.

The central distribution location of the system is the Fiber Optic, coaxial and Copper Main Distribution Frame (MDF) located within the centrally located MDF/IDF Room of each building. Various fiber optic, coaxial and copper riser cables terminate on the MDF and extend to the Communications Rooms/Closets (IDFs) located throughout the buildings. Each building typically has one MDF/IDF Room and a varying number of IDF rooms/closets dictated by the horizontal station cabling limitation of 100 meters for high performance cable. The distance from the information outlet to the termination within the IDF is limited to 90 meters (the permanent link). The IDF room/closet houses the Intermediate Distribution Frame (IDF), Copper and Fiber Optic IDF Patch Panels, Local Area Network (LAN) equipment, and other electronics. Both the riser cables and the horizontal station cables feeding the floor's workstations information outlets terminate in the IDF on Data patch panels, Voice 110 hardware, and Fiber Optic Patch Panels. These termination points act as the cross-connect point between the MDF and the floor that is being served. Large floors are divided into zones, via an imaginary line, with each zone being served by its respective IDF room/closet. (See figure 1)

Each work area and workstation is served by an information outlet, which provides the jacks for plugging in telephones, computers, broad band coaxial systems, fax machines, modems, and other devices at the desktop. The information outlets are served by varying sets of cables consisting of fiber optic and copper technologies, which originate in the IDF Room. IDF outlets are typically displayed as varying types of triangles (shaded, half-shaded, etc.) on blueprints. (See figure 2)

A subsystem architectural approach, using the latest technologies, provides a comfortable level of assurance that the system will support new applications and industry standards as they emerge.

FIGURE 1

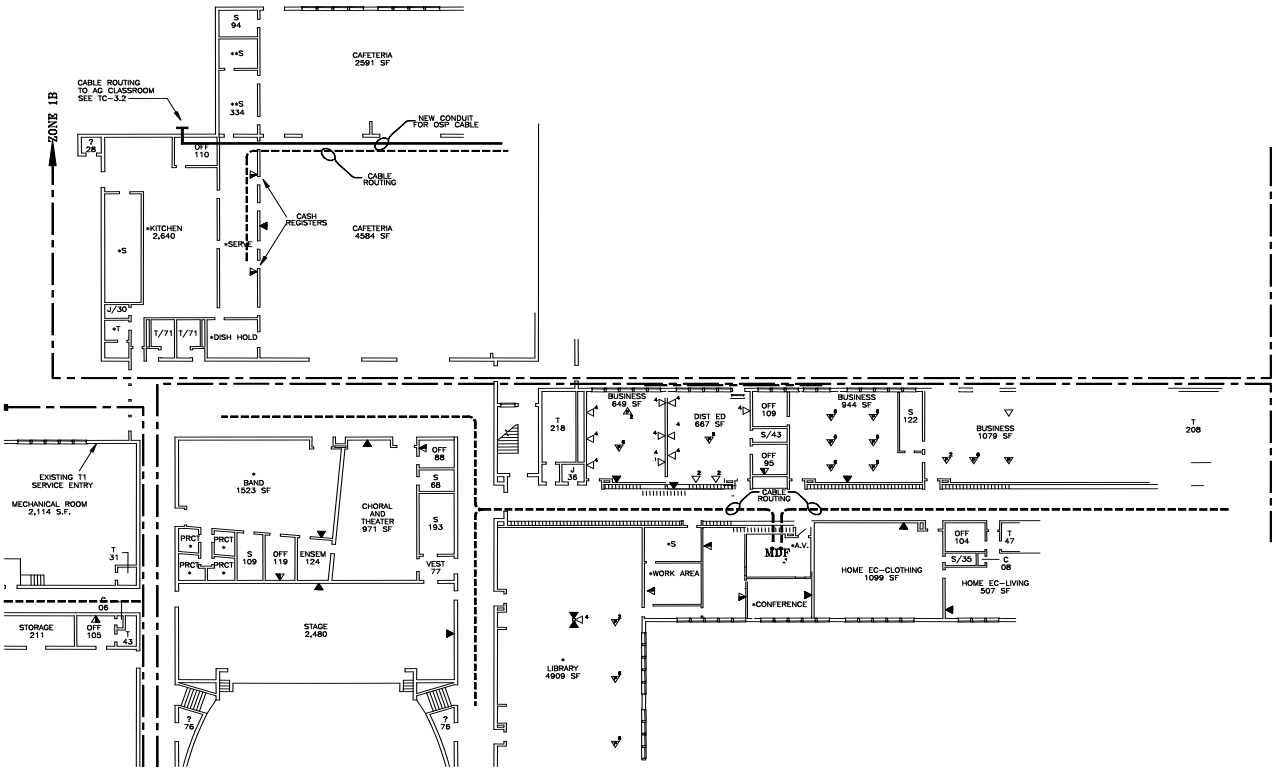
CABLE ROUTING TO AG CLASSROOM SEE TC-3.2
ZONE 1B
NEW CONDUIT FOR OSP CABLE
CABLE ROUTING
CASH REGISTERS
CAFETERIA 2591 SF
CAFETERIA 4584 SF
KITCHEN 2,640
SERVE
DISH HOLD
EXISTING T1 SERVICE ENTRY
MECHANICAL ROOM 2,114 S.F.
STORAGE 211
BAND 1523 SF
CHORAL AND THEATER 971 SF
STAGE 2,480
BUSINESS 649 SF
DIST ED 667 SF
BUSINESS 944 SF
BUSINESS 1079 SF
CABLE ROUTING
WORK AREA
CONFERENCE
HOME EC-CLOTHING 1099 SF
HOME EC-LIVING 507 SF
LIBRARY 4909 SF

FIGURE 2

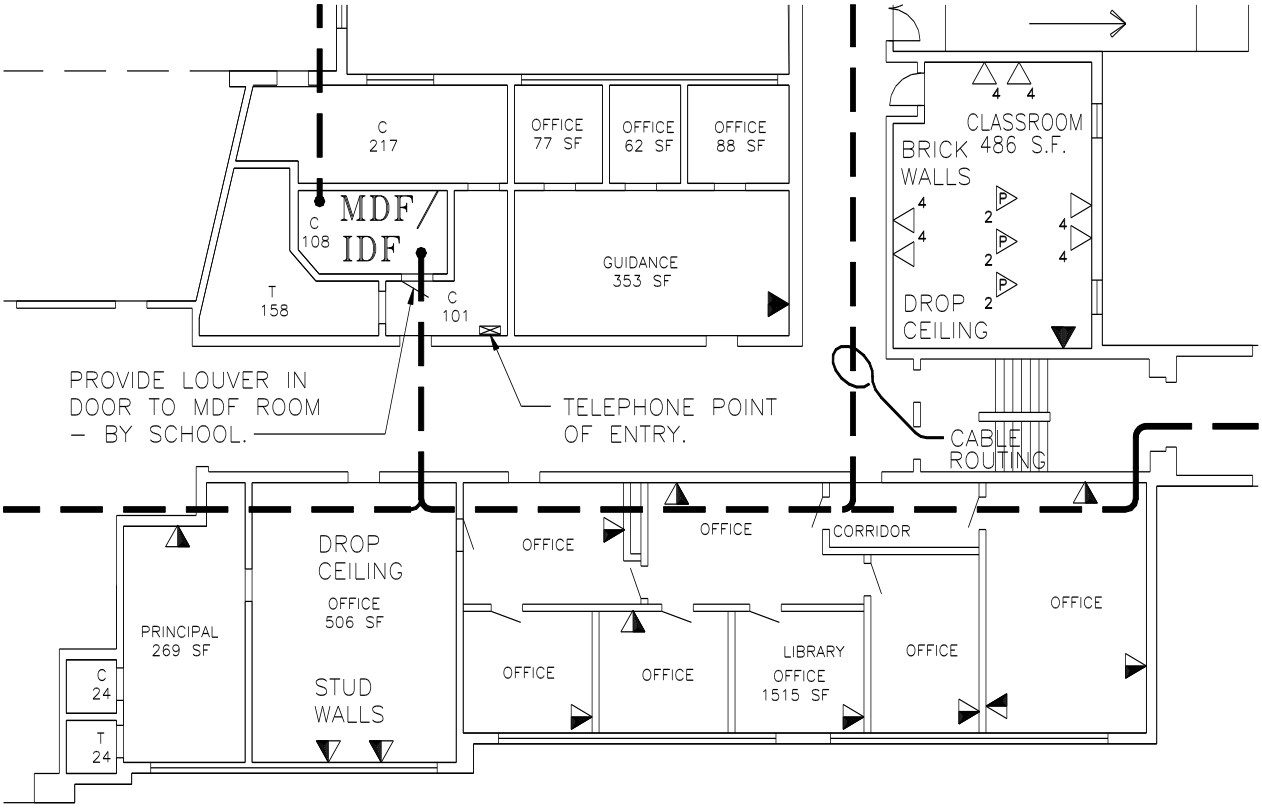

PART 7 PROCEDURES

Designing a cable system for an institution involves various organizations and individuals and requires a great deal of coordination. Once an institution is designated for wiring, AutoCAD drawings of the floor plans need to be acquired. AutoCAD is a type of computer aided drafting (CAD) format. These files are plotted and converted to blueprints that serve as the working drawings for site surveys and engineering purposes. Based on interviews with the agency's staff and Technical Coordinator will draw triangles on the drawing displaying the locations that information outlets are to be located. Also, tentative locations for the Communications/Data rooms/closets will be marked on the drawings. This information will be approved by the institution's officials and sent to the engineering team.

The engineers will survey the building—floor plans for new construction—and evaluate the communications rooms/closets, plan cable routing, and review the information outlet locations. The necessary adjustments will be made during the site survey, and the engineer will leave the site with the proper approvals from the agency's management if there are major changes such as room relocations.

The engineering team will then design the cable system for the building. The end product will be submitted to the agency's Technical Coordinator for comment and/or revision. If no adjustments are necessary, the blueprints are issued to the contractor for construction.

PART 8 HORIZONTAL DISTRIBUTION SYSTEM

The horizontal structured cable plant is the portion of the communications wiring system that extends from the information outlet to the Communications/Data room/closet.

A. Horizontal Distribution System General

1. The horizontal distribution system includes the:
   - Information outlet at the workstation
   - Cables connecting the workstation to the Communications/Data room/closet
   - Intermediate routing and distribution systems
2. The horizontal distribution system should be configured in a star topology. All communications outlets within a work area should be connected to a single Communications/Data room/closet, as defined by the zone concept.
3. This infrastructure must serve all of the Communications requirements of the agency or owner.
4. Communications applications served by the horizontal system can include:
   - Voice (e.g., telephones)
   - Data (e.g., terminal connectivity, modems, etc.)
   - Local area networks (e.g. Ethernet)
   - Audio & Video (e.g., CATV, video conferencing and security monitoring)
   - Graphics & Imaging
5. When designing a horizontal distribution system, include capacity to satisfy long- term requirements as well as initial plans. Ensure that the distribution system has the flexibility to accommodate necessary moves, additions, changes, and system growth.
6. After construction, the horizontal distribution system is typically difficult to access. Therefore the time, effort, coordination, and skills required for changes can be extremely costly. In addition, access to the horizontal distribution system frequently causes disruption to the user community.
7. All Horizontal Workstation Communications and broad band coaxial system cabling will be "home-run" from the information outlet location to the termination point within the corresponding IDF or MDF/IDF room.
8. Horizontal cable paths will be in a "streets and avenues" manner, typically following main walkways.
9. Horizontal cables are to be fastened onto hangers five feet apart with all cables bundled with tie wraps, and are to have a small amount of slack visible.
10. Cables must not rest on any structures or the hung ceiling. Cables are not to be fastened to ducts, pipes, conduits, or any other existing structures. Cable bundles should be secured to the slab overhead to avoid any conflict with or EMI from flexible electrical conduits, transformers, motors, etc.
11. Some cabling shall run to workstation and other outlets through cavities in the dry wall and openings in sheet metal or wooden studs within the dry wall construction. The sheet metal studs will not have gaskets for this purpose, so it is the Contractor's responsibility to exercise extreme care in snaking cable through these areas, so as to avoid damage to the cable jacketing.

12. The building's horizontal wiring plan is to be installed on all floors from the information outlet to the termination point within the associated IDF Room.

13. Horizontal cable will be installed onto “J” hooks or equivalent in the ceiling or tops of walls near ceiling. Cables are to be fastened to “J” hooks or equivalent every 5 feet. The cable contractor is to provide and furnish the “J” hooks.

14. All station cable (horizontal) and tie cables that run from relay racks to the wall- mounted frames are to be plenum-rated.

B. Horizontal Communications Cable Specification

1. For each type of information outlet indicated on the attached drawings, the contractor shall furnish all of the following equipment, install it in the correct configuration, and test it.

2. All cabling, outlets, and termination patch panels used for the Category 6 / ISO Class E data system may be provided by a single manufacturer and shall be certified as part of the 25 year minimum warranty- Where the installer chooses to use one (1) manufacturer for cabling and a different manufacturer for the outlets and termination patch panels for the Category 6 / ISO Class E data system, the two (2) manufacturers must prove to have compliant interconnecting hardware and shall be certified as part of the 25 year minimum warranty.

3. All Category 6 and 6a UTP & Fiber cabling is to be handled and terminated in accordance with the Manufacturer’s Premises Communications Application and Installation Guide.

4. In addition to the above manufacturer’s standards, all applicable EIA/TIA Category 6 and Fiber Optic Cable standards are to be strictly adhered to.

5. The fiber optic cable is to be terminated on both ends with an SC type connector on the patch panels.

6. The contractor is to use Plenum cable for all station 4-pair copper, coaxial, and 2-strand fiber cabling.

7. Plan routes to ensure that the proposed route on the plans falls within the EIA/TIA distance limitations (90 meters after termination) for horizontal cabling.

8. Cables serving information outlets that cannot be routed down wall cavities will be enclosed in latching surface-mount raceways, anchored (not with adhesives) to walls. Contractor will provide all raceway fittings to allow for level and plumb routes from ceiling to information outlet. Proper fill ratios must be observed. Contractor may reference the manufacturer’s catalogs or specifications for correct fittings and fill ratios. Contractor must use all accessory fittings required in order to build a neat and functional installation. This same method will apply to routing horizontal cables to workstation outlets where ceilings are not accessible**.**

9. The RG-6U Plenum Cable and the RG11U Plenum Cable are to be terminated with F type connector or connectors. The RG6U Coaxial Station cabling will be terminated onto a rack or wall-mounted “F” Connector Patch Panel located in the IDF Room.

10. The IDF Room side of the Voice four-pair cables serving a standard outlet will be punched down

on the corresponding IDF Room's wall-mounted frame on 110 Cat 6 field-terminated cross-connect terminal blocks.

11. The IDF Room side of the Category 6 – 6a four-pair cables serving a standard outlet will be punched down on individual 110 (Category 6–6a) modular patch panels, 568B wired. The patch panels will be mounted in the relay racks within the IDF rooms.

12. The contractor is to install a wire management panel between all patch panels and above the first panel as well as one below the last panel.

13. In locations that have wall-mounted racks, the contractor is to use the Cat 6 hinged down patch panels with associated cable management. In cases where the hinged down series is required, the contractor is to take care to dress the cables neatly and allow for future access to the rear of the panel.

14. Contractor is to label both the front and the rear of the patch panels. The terminations are to follow this sequence: Workstation 001A, 001B, 002A, 002B. It is acceptable to change numbering for floor or closet designation.

C. Zones

1. A zone is a contiguous area in which all horizontal wiring is homed to a single communications closet.

2. To maintain an orderly, understandable wiring system, it is imperative that the horizontal distribution system be structured in zones.

3. Within a zone, all communications wiring is run to a single communications closet.

4. Other zones use different Communications/Data rooms/closets. Cross-zone horizontal wiring is prohibited. Connections between zones are provided via the vertical distribution system.

PART 9 COMMUNICATIONS/DATA ROOMS/CLOSETS (GENERAL)

The Communications/Data room/closet is a concentration point for communications and LAN services. In this room, premise wiring and cabling are terminated and cross-connected. In addition, active networking devices such as switches are placed here. Communications/Data rooms/closets provide a safe area for housing distribution cabling, premise equipment, and termination fields. These rooms/closets are a focal point for communications services.

In addition to supporting in-house connectivity, the MDF Communications/Data room/closet often provides a termination point for the local telephone company. The entrance facility, or demarcation point (de-mark), is the location where outside communications services, such as copper telephone lines, fiber optic Data circuits, and CATV, are delivered to the building. Typically, distribution of communications services within the building originates at this point and is the responsibility of the owner.

Special considerations must be given when providing the building entrance pathways for the copper, fiber optic, and coaxial cables that service providers will install in to the building de-mark. It is the owner's responsibility to provide this pathway into the building. Contact DTI for standards and specifications for building entrances.

The following section details the basic requirements for a Communications/Data room/closet. It may be used to assist in:

- Designing new Communications/Data rooms/closets
- Assessing and refining existing Communications/Data rooms/closets to support evolving communications requirements.

A. Design Guidelines

The suggested building practices put forth in this section are recommendations and are subject to field conditions and budget constraints. Local building and electrical codes, practices and requirements may supersede the guidelines presented in this section.

1. Sizing of Communications/Data rooms/closets
   - The Communications/Data room/closet must have enough space to support required communications systems, including projected growth.
   - The existing system is likely to be replaced in the future
   - A new system may, require more (or less) space
   - The existing system and a new system may need to coexist during a cut-over

2. Location of Communications/Data rooms/closets
   - Communications/Data rooms/closets should be situated so as to minimize the length and the quantity of cable runs needed for the distribution systems.
   - The maximum horizontal distribution cable distance must be less than 90 meters (295 ft.), independent of media type. This distance represents the cable length from the mechanical termination of the media in the Communications/Data room/closet to the outlet in the work area. This is known as the permanent link.
   - Vertical (backbone) distribution system distance limitations vary and are dependent upon media, topology, and facility issues.

3. Unacceptable locations for Communications/Data rooms/closets:
   - Anywhere water vapor exists, such as boiler rooms, washrooms, or janitor's closets.
   - Spaces with corrosives, explosives, and combustibles, including acid, ammonia, chlorine, oxygen, and petroleum vapors.
   - Spaces containing steam pipes, drains, or clean-outs.
   - Areas with high traffic volumes (for security reasons, as well as to minimize the risk of inadvertent damage) unless separately enclosed.
   - Areas of high electromagnetic interference (EMI) or radio frequency interference (RFI). Both adversely affect system performance and reliability.

B. General Room Requirements

1. Electrical

- All active Communications, Data and Video systems have specific electrical power requirements. Plan electrical service to ensure smooth installation, reliable service, and compliance with manufacturers' warranties. Be sure to consider equipment manufacturer's specifications, National Electric Code (NEC) requirements, State and local codes, ordinances, and requirements.

- Electrical devices capable of causing line transients, such as fans, pencil sharpeners, radios, calculators, and lights, must be separated electrically from the Communications equipment. To

accomplish this, all Communications and Data equipment requires separate electrically isolated ground circuits and/or building grounding. The outlets on these circuits should be labeled and/or color coded. Frequently, orange-colored wall outlets are used to identify power sources used for computing and communications equipment. Utility outlets are also needed in the Communications/Data room/closet for tools, test sets, and other equipment.

- Each Communications/Data room/closet shall have one 110V, 15 Amp electrical convenience outlet and one 110V, 20 Amp dedicated-circuit isolated-ground electrical outlet for the electronic equipment. This is a minimum requirement based on the typical current draw of the networking equipment to be placed. The ground for the equipment outlet should be an isolated ground where possible to avoid line transients. The 110V 20 Amp dedicated circuit isolated ground electrical outlet(s) should be mounted in convenient location to facilitate the use of the shortest equipment power cords. The recommended location is at the top of the rack or on the ladder tray.

- All electrical isolated ground outlets serving Communications and Data equipment must be attached to non-switched circuits to prevent inadvertent equipment shutdown. It is also recommended that they be on a UPS and/or generator if available.

2. Grounding

- Most Communications and Data equipment requires bounding and grounding of equipment cabinets. Do not use plumbing or conduit (EMT) fixtures as a ground source. Grounding shall meet the NEC and EIA/TIA requirements and practices except where other authorities or codes impose more stringent requirements or practices. (Refer to NEC Chapter 2 article 250 and Chapter 8 Communications Systems, TIA/EIA Standard J-STD-607-A and Motorola R56 Standards and Guideline for Communication site).

- In addition to protecting personnel and equipment from hazardous voltages, the grounding system may reduce the effect of electromagnetic interference (EMI) throughout the structured cable plant. Improper grounding can result in induced currents that disrupt Communications circuits.

- Ensure that the installation conforms with applicable regulations and practices

- Ensure that each Communications/Data room/closet has an appropriate ground buss bar

- Ensure that grounding is available for cross-connect frames, patch panel racks, Telephone and Data equipment, as well as testing and maintenance equipment

3. Space

- A distance of three feet is the preferred clearance from the front, back, and side of a relay rack.

- If there are space constraints, it is acceptable to provide a minimum of two feet of clearance on one rack side for access and a minimum of two feet of front and back clearance for cross-connect fields, patch panels, etc. If possible, locate sleeves, cores, slots, and/or conduits together in one area to maximize usable wall space.

4. Rooms/Closets Sizing

- Determine the number of relay racks required for the termination of patch panels and electronic equipment. Assume that free-standing relay racks will be installed and provide three feet of space on all sides of each.

- Determine the amount of wall space that will be required for the installation of termination equipment. A minimum of four feet should be used as a criterion.

- Determine if the plywood backboard will be furred-out. This equals approximately 4" of space taken from the room.

- Take into account the door swing if the door opens into the room. Ideally the door should open out from the room.

- Determine how much space any sleeves, conduits, or other equipment require.

- Determine the size of the room by constructing a diagram, to scale, of all of these components, taking into account all the walkways and door swings.

- If a very small number of information outlets are being installed, the minimum size a closet can be is 4' wide and 3' deep. This assumes a 4' X 8'X 3/4" plywood backboard, one wall-mounted relay rack that has a fiber optic patch panel, 110 blocks, copper patch panels, coax patch panel, LAN hubs and ground buss bar. It is recommended to install plywood on all walls, from the floor to the ceiling.

5. Structural Walls

- Extend from the floor to the deck above (fire wall)

- Be securely fastened to the floor and the deck above

- Conform to national and local construction guidelines

6. Wall Linings

- Each Communications/Data room/closet will contain a minimum of one furred-out or flush sheet of plywood (4' X 8') mounted on the wall.

- It is recommended to install plywood floor to ceiling on all walls.

- Securely fasten the plywood to wall framing members to ensure that it can support any attached equipment.

- The plywood is to be 3/4", A/C grade, and fire-retardant.

- All plywood backboards are to be mounted smooth side out and painted white at time of installation, prior to installation of equipment onto the plywood.

7. Floor Finish

- Keep dust to a minimum in Communications/Data rooms/closets.

- Anti-static Asphalt Tile, Linoleum Tile, or Sealed Concrete is acceptable floor finishes.

8. Ceilings and Doors

- Dropped ceiling height should be at least nine feet from the finished floor to provide adequate space for equipment cabinets and suspended cable trays. Some equipment may require additional height, depending on the manufacturer's specifications. Avoid installing false ceilings in small closets.
- Overhead ceiling vents should be centrally located to maximize air distribution and maintenance access. Avoid placing overhead ceiling vents directly over suspended racks and equipment cabinets.
- All ceiling vents should have diffusers (vent manifolds) securely installed.
- Design doorways with minimum measurements of 36 inches wide. Hinge the doors to open outward.
- All Communications/Data rooms/closets should have door locks and a minimum number of windows, if any. Closets should be kept locked. Provide keys to select personnel who are on-site continuously.

9. Lighting

- Within ceilings, position light fixtures at least eight feet above the finished floor.
- Indirect (reflected) lighting is not recommended.
- If possible, minimize heat and glare by using fluorescent light fixtures with protective covers instead of incandescent fixtures.
- Do not place light fixtures where the light may be blocked or filtered.
- Typically, light fixtures should not be directly above or within 12 inches of cabling, equipment cabinets, termination frames or other free-standing equipment.
- Install light fixtures on power circuits separate from those used for communications equipment.

10. Communication/Data Room/Closet Environment

- Manufacturers of most hardware recommend a room environment consisting of a temperature between 72–75° Fahrenheit and a 45–50% humidity level.
- It is recommended that temperature swings do not exceed 10° and humidity remain within a ±5% range.

C. MDF Requirements

An MDF Room is a specialized communications closet that may house major communications systems, such as a PBX (private branch exchange), communications processor, and routing equipment. The MDF Room is generally considered to be distinct from an IDF Room because of the complexity of the equipment it contains.

A typical Main Distribution Frame (MDF) Room is composed of a wall-mounted plywood backboard and relay racks designed for mounting termination equipment and electronics (see Figure 3). Most

MDFs within the building cabling system also serve as an IDF. This is accomplished by providing separate relay racks for each and delineating the wall-mounted frame's 110 blocks for Station cabling (see Figure 4 and Figure 5).

FIGURE 3

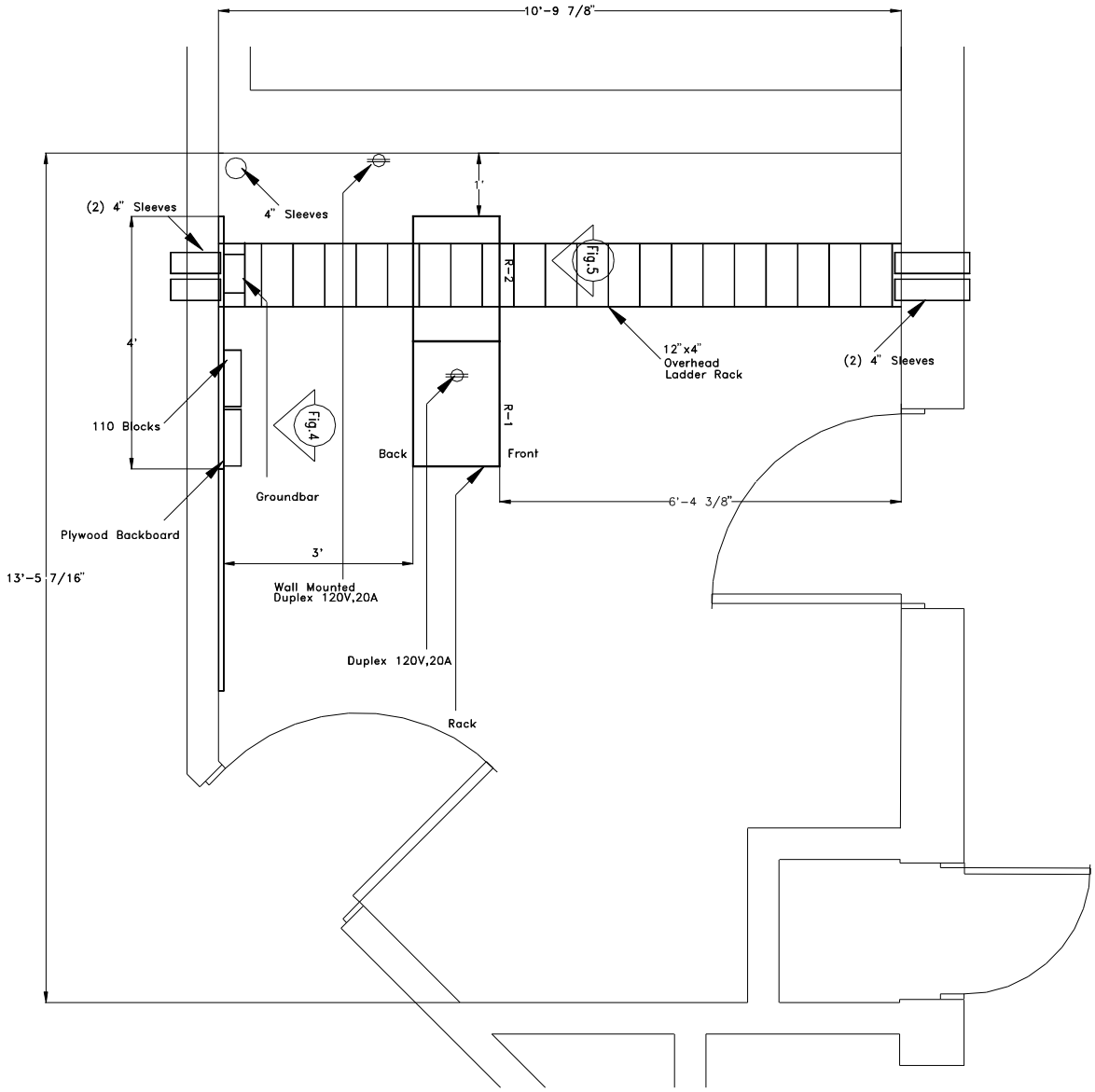

Main Distribution Frame Room Layout
NOT TO SCALE

FIGURE 4

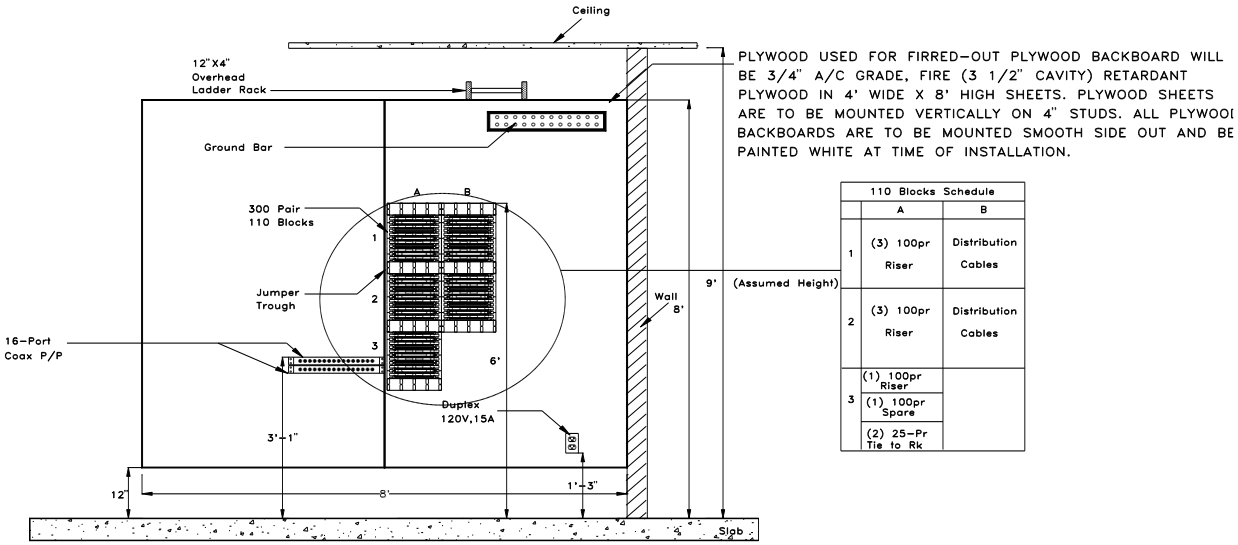

Main Distribution Frame Voice Elevation
NOT TO SCALE

FIGURE 5

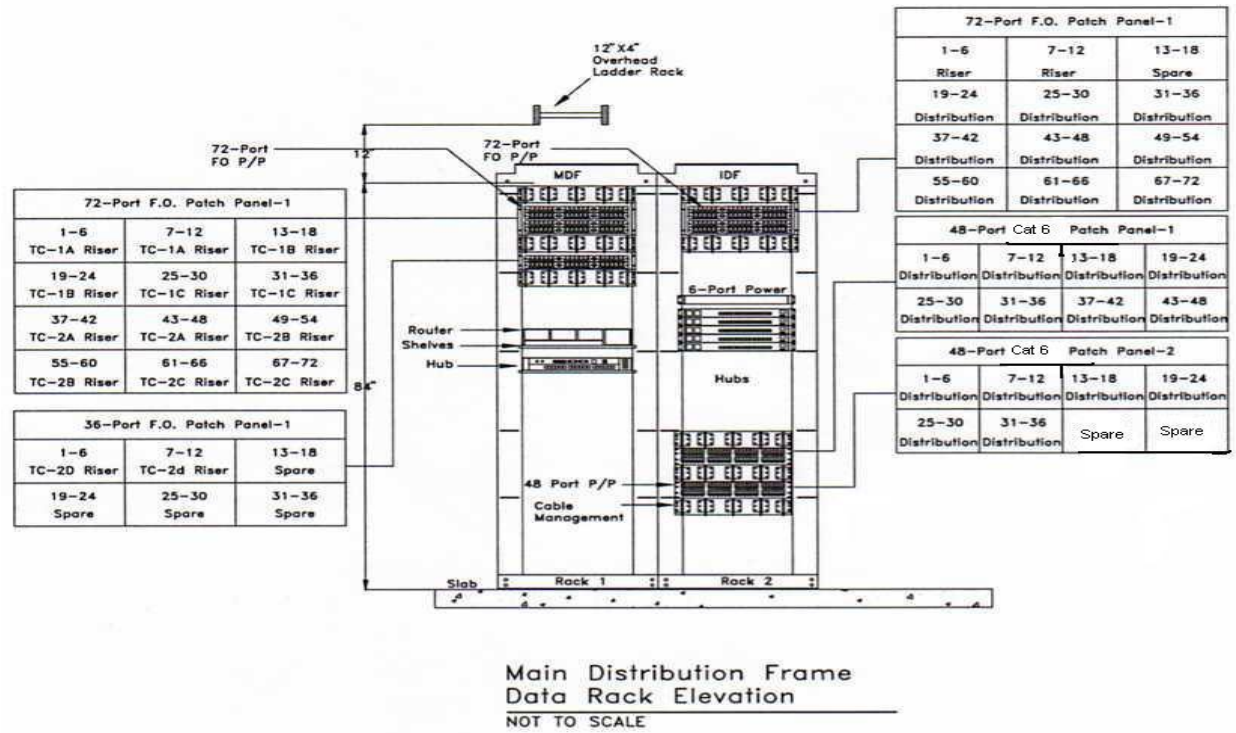

Main Distribution Frame
Data Rack Elevation
NOT TO SCALE

1. **MDF/IDF Room Equipment Enclosures**
   - Any MDF/IDF Rooms located in rooms that are shared with space used for any other purpose should have wire mesh cages or sheetrock walls around the Communications equipment, or the equipment should be installed in a lockable cabinet.

2. **Environment**
   - Environmental control equipment must function properly at all times. If the building system cannot ensure continuous operation on weekends and holidays, provision of stand-alone control units for the MDF/room and IDF room/closet is necessary.

   - Within the MDF room and IDF room/closet, temperature should not vary by more than 5°F, and humidity must not vary by more than 10%. Measure temperature and humidity five feet above the finished floor in the center of the communications room/closet.

3. **Local Exchange Carrier (LEC)**
   - Placement of Communications equipment may be influenced by vendors and service providers. For instance, the LEC (local phone company) may decide to terminate the Central Office (CO) service directly into the equipment space provided or request termination space other than that offered by the customer. If they request termination at a point other than that requested by the customer, the LEC should provide reasonable explanation.

   - The LEC, CATV, and most service providers will require a conduit entrance in to the building to provide their service. The minimum requirements are two (2) four- inch conduits for the LEC and one (1) four-inch conduit for each other service provider, unless they specify otherwise in writing.

- It is critical that the high speed Data line, TLS – Canoga Perkins and Fiber Optics be located in the MDF room. This will ensure security and simplify troubleshooting.
- The LEC may also need space for distribution systems terminations (either horizontal or vertical) and patch cable terminations.

4. Other Equipment Vendors

- As with the local phone company (LEC), it is vital to consult with all Communications equipment manufacturers for their specific space and operational requirements, such as the telephone system and Data LAN/WAN equipment provider.

5. Relay Racks

- Each MDF will contain a minimum of one 19”W X 7’H Relay Rack onto which the fiber optic/copper patch panels and Data electronics are mounted.
- The relay racks should have a minimum of 42 rack units of mounting space on standard 19” wide rails.
- In some cases the relay racks are wall-mounted and in others they are free-standing two- or four-post racks. It must be determined which type of rack is required, based on field conditions, equipment manufacturer's requirements, and space allocated.
- All racks are to be grounded and bolted to each other as well as to the slab or wall.
- The rack should have vertical and horizontal cable management to accommodate routing of patch cords.
- There should be a minimum distance of 48” to be maintained from three sides of the rack.
- The relay rack specifications and associated components should meet the requirements of the equipment that will be installed in it.
- It should be at a minimum 84” tall with 6” rails, with 19” equipment mounting space and vertical and horizontal wire management.

6. Wall-mounted Relay Racks

- The rack is to be securely fastened to the wall behind it and attached to the ladder rack above.
- The rack should be sized to accommodate the equipment to be installed in it, with vertical and horizontal jumper management.

7. Communications Cabinets

- All communications cabinets are to be grounded to the grounding and bounding system and bolted to each other and to the slab.
- Each communications cabinet is to be installed with its side to an adjacent wall. Three feet of clearance around the cabinet is recommended and the cabinets must have front and rear access.

8. Data Equipment Cabinets

- Data equipment cabinets should conform to the State Data Center Standard as follows:

Cabinet size	23.54”Wx44.30’Dx79.’H
Rack units	42 rack units for equipment mounting
Mounting rails	two pair 19" adjustable depth universal mounting
Mesh steel doors	single front and split rear with locking handles
Vertical cable management	trough, rings or Velcro tie downs or combination of, mountable left or right side
PDU mounting	space to mount two horizontal PDU closest to equipment mountable top or bottom, together or separate
PDU Metering	Metered PDU’s to display Amperage, Voltage
Side panels	removable, solid, both sides
Top	solid with cabling access opening capabilities
Bottom if required	solid with cabling access opening capabilities

- Cabinet should have grounding, bounding and anti-tip capabilities that can be added when required.
- Approved cabinet Manufacturer: HP Model # BW903A or approved equal

9. Cable Trays

- Between the relay rack and the wall-mounted frame, a 12” cable tray (center-rail systems are not permitted), with a 4" load depth and 6" rung spacing is to be installed suspended from a ceiling support structure, mounted to the relay rack and the wall.
- Do not attach any cable tray to a suspended ceiling grid.
- An open wire basket cable tray system is acceptable for cable support.
- Approved manufacturer: Cooper B-Line part # FT4X12X10 or approved equal

10. MDF Room Electrical Requirements

- Each room shall have a minimum of one duplex dedicated 20 Amp isolated ground circuit and one shared 20 Amp circuit.
- Larger equipment loads may require additional circuits.

D. IDF Room Requirements

Each IDF Rooms within a building supports all connections in single, contiguous area (zones). Cross-zone wiring is not to be installed from user workstations. Connections between zones are made through backbone wiring systems, which link the IDF Rooms to the MDF. A typical Intermediate Distribution Frame (IDF) Room is composed of a wall-mounted plywood backboard and relay racks designed for mounting termination equipment and electronics.

FIGURE 6

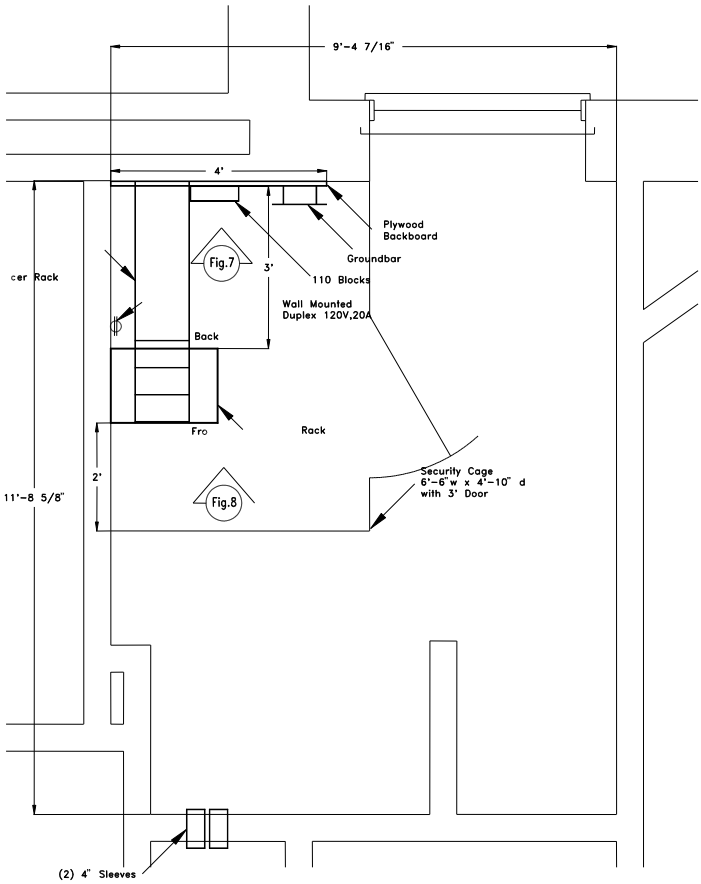

Sample IDF –TELECOMMUNICATIONS CLOSET LAYOUT
NOT TO SCALE

FIGURE 7

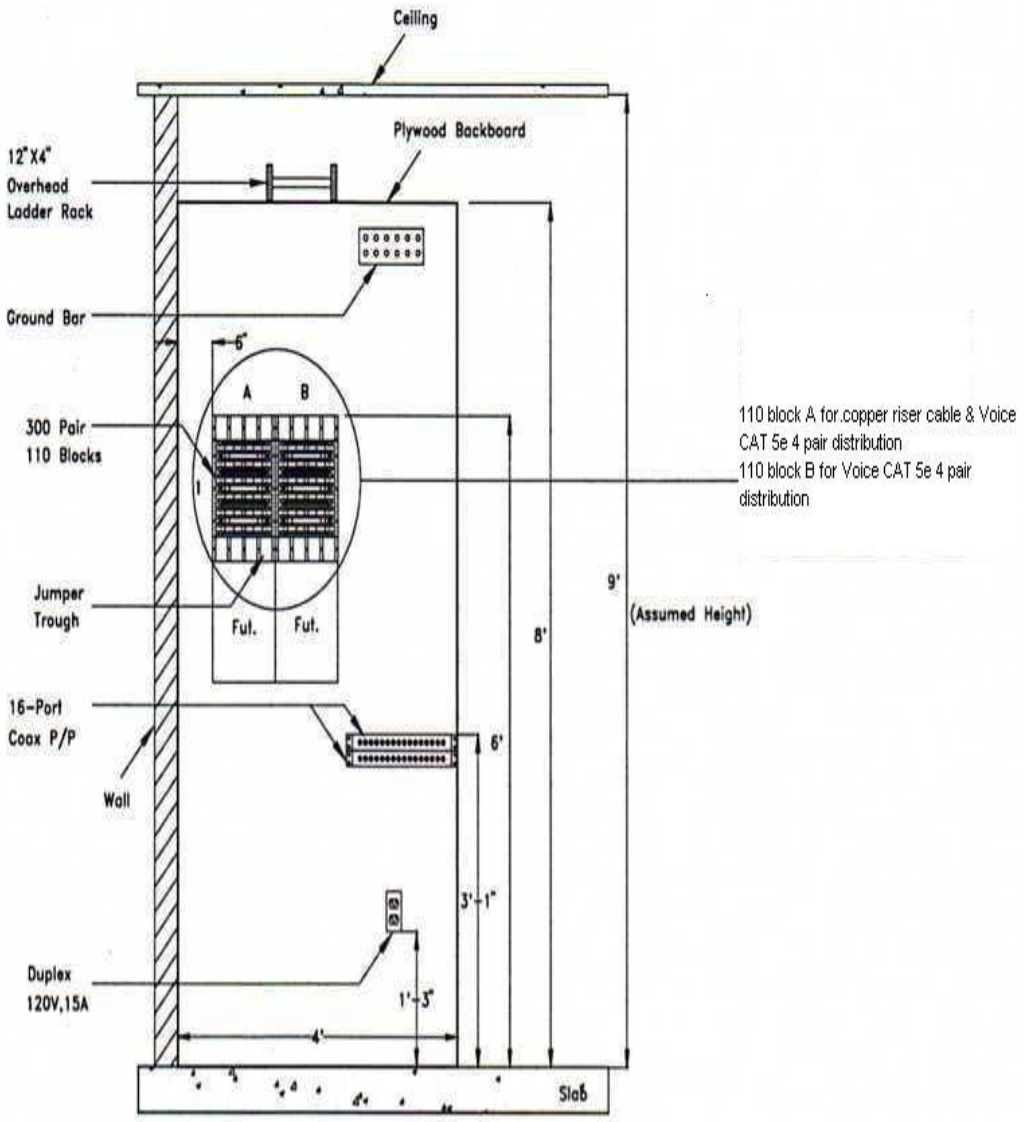

Sample IDF –Telecommunications Closet Elevation
NOT TO SCALE

FIGURE 8

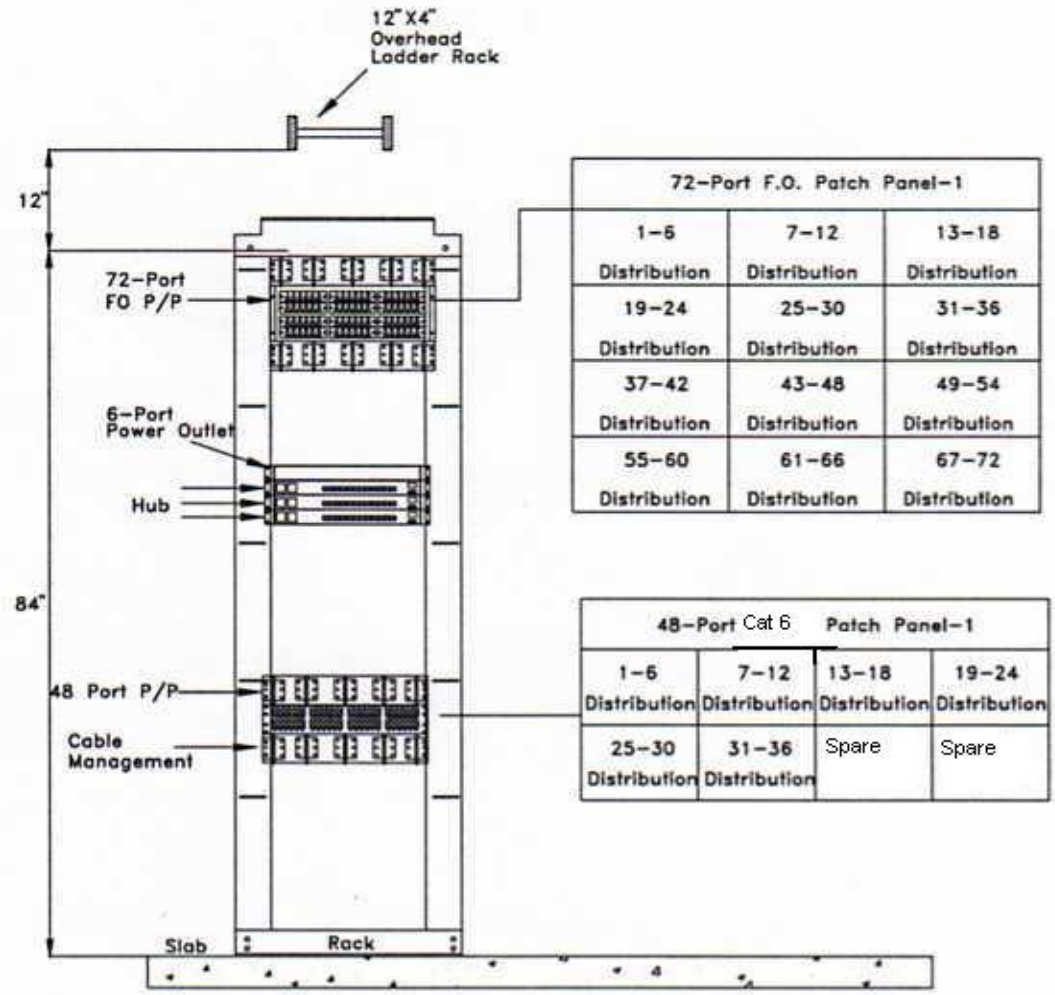

Sample IDF –Telecommunications Closet
Data Rack Elevation

NOT TO SCALE

1. **Number of IDF Communications/Data rooms/closets within a building**
   - Each floor should have at least one IDF Communications/Data room/closet.
   - Wiring workstations to IDF Communications/Data rooms/closets on different floors is not a preferred practice but can be done if no alternative exists.
   - If possible, IDF Telecommunication Closets should be positioned toward the center of the

building (usually the core area) and stacked vertically, when possible, in multi-story buildings.

2. Plywood Backboard

- Each IDF Room will contain a minimum of one 4' X 8' sheet of plywood flush- mounted on the wall.
- Securely fasten the plywood to wall-framing members to ensure that it can support attached equipment.
- The plywood is to be 3/4", A/C grade and fire retardant.
- All plywood backboards are to be mounted smooth side out and painted with white fire retardant paint at time of installation and prior to installation of equipment onto the plywood.

3. IDF Room Equipment Enclosures

- Any IDF Rooms located in rooms that are share space used for any other purpose should have wire mesh cages or sheetrock walls around the Communications equipment.

4. Relay Racks

- Each MDF will contain a minimum of one 19"W X 7'H Relay Rack onto which the fiber optic/copper patch panels and Data electronics are mounted.
- The relay racks should have a minimum of 42 rack units of mounting space on standard 19" wide rails.
- In some cases the relay racks are wall-mounted and in others they are free-standing two- or four-post racks. It must be determined which type of rack is required, based on field conditions, equipment manufacturer's requirements, and space allocated.
- All racks are to be grounded and bolted to each other as well as to the slab or wall.
- The rack should have vertical and horizontal cable management to accommodate routing of patch cords.
- The relay rack specifications and associated components should meet the requirements of the equipment that will be installed in it.
- It should be at a minimum 84" tall with 6" rails, with 19" equipment mounting space and vertical and horizontal wire management.

5. Wall-Mounted Relay Racks

- The rack is to be securely fastened to the wall behind the rack and attached to the ladder rack above.
- The rack should be sized to accommodate the equipment to be installed in it, with vertical and horizontal jumper management.

6. Communications Cabinets

- All communications cabinets are to be grounded to the grounding and bounding system, bolted to each other and to the slab.
- Each communications cabinet is to be installed with its side to an adjacent wall.
- Three feet of clearance around the cabinet is recommended, and the cabinets must have front and rear access.

7. Cable Trays

- Between the relay rack and the wall-mounted frame, a 12” cable tray (no center rail systems), with a 4" load depth and 6" rung spacing is to be installed suspended from a ceiling support structure, mounted to the relay rack and the wall.
- Do not attach cable trays to the suspended ceiling grid.
- An open wire basket cable tray system is acceptable for cable support.

8. IDF Room Electrical Requirements

- Each Communications/Data room/closet shall have one 110V, 15 Amp electrical convenience outlet and one 110V, 20 Amp dedicated–circuit, isolated-ground electrical outlet for the electronic equipment.
- This is a minimum requirement based on the typical current draw of the networking equipment to be placed.
- The ground for the equipment outlet should be isolated where possible to avoid line transients.
- The 110V 20 Amp dedicated-circuit, isolated-ground electrical outlets should be mounted in convenient location to facilitate the use of the shortest equipment power cords.
- The recommended location is at the top of the rack or on the ladder tray.
- All electrical isolated ground outlets serving Communications and Data equipment must be attached to non-switched circuits to prevent inadvertent equipment shutdown.
- It is also recommended that they be on a UPS and/or generator if available.

PART 10 MDF & IDF PRODUCT SPECIFICATIONS

A. Category 6 Patch Panels

In new construction projects, the default cabling infrastructure shall be Category 6 unless specified otherwise.

1. Category 6 Patch Panel Requirements

- Category 6 patch panels shall be standard 8-position, RJ-45 style, un-keyed, in 48-port configurations.
- Panel frames shall be 14-gage steel with rolled edges top and bottom for proper stiffness.

- Panel design shall incorporate plastic push-fasteners to permit hands-free positioning onto standard EIA-310-D 19" mounting rails.
- Panels shall accommodate a minimum of 24 ports for each rack mount unit (1 RMU = 1.75 in.).
- Panels shall be designed for 4-pair, 100 ohm balanced unshielded twisted pair (UTP) cable.
- Panels shall terminate 26-22 AWG solid conductors, with maximum insulation diameter of 0.050 in.
- Panels shall have attached wiring instruction labels to permit either T568A or T568B wiring configurations.
- Panels shall have individual port identification numbers on the front and rear of the panel.
- Panel adapter modules shall be 110-style termination with tin lead solder plated IDC contacts.
- Printed circuit boards shall be fully enclosed front and rear for physical protection.
- Panel contacts shall withstand a minimum of 2000 mating cycles with an FCC 8-position RJ-45 plug, without degradation of electrical or mechanical performance.
- Panel contacts shall be constructed of Beryllium copper for maximum spring force and durability.
- Contact plating shall be a minimum of 50 micro-inches of hard gold in the contact area over 50 micro-inch of nickel.
- Panel termination method shall follow the industry standard 110 IDC punch-down, using a standard 110 impact termination tool.
- Panels shall be compatible with a 4-pair multi-punch impact termination tool designed specifically for the purpose. Bending or other damage to the panel using a multi-pair punch tool shall not occur.
- IDC contact termination towers shall have tapered pair-splitting features to aid wire insertion and minimize pair un-twist.
- IDC contacts shall be Phosphor Bronze with 100 micro-inch tin lead 60/40 plating over nickel.
- Panels shall not require special cords or special installation requirements.
- Panel ports shall accept optional hinged dust covers and port identification icon buttons.
- Space above the adapter ports shall be available for additional labeling per ANSI/TIA/EIA-606-A.
- Category 6 panels shall be backward compatible with existing Category 3, 5, and 5e cabling systems for fit, form, and function.
- Panels shall accept a clip-on rear cable management support bar to provide cable strain relief.

2. Category 6 Patch Panel Performance Requirements

- All transmission performance parameters shall be independently verified by a UL or ETL third party testing organization.
- Category 6 panels shall meet or exceed Category 6 transmission requirements for connecting hardware, as specified in ANSI/TIA/EIA-568-B.2-1, Transmission Performance Specifications for 4-Pair 100 ohm Category 6 Cabling.
- The manufacturer shall provide Category 6 component compliance certificates from third party testing organizations upon request.
- Panels shall be UL LISTED 1863 and CSA certified.
- Panels shall exceed IEEE 802.3 DTE Power specification to 4 times the rated current limits with no degradation of performance or materials.
- Panel contacts shall withstand a minimum of 2000 mating cycles with an FCC 8-position RJ-45 plug, without degradation of electrical or mechanical performance.
- Panels shall be third party verified, error free Gigabit Ethernet performance to IEEE 802.3 standard.
- Category 6 panels shall meet the current draft 10 Gb/s performance requirements of IEEE 802.3an and TSB-155, for a maximum 55-meter channel length. Conditions of requirement No. 10 above apply.

3. Acceptable Manufacturers:

- Hubbell Premise Wiring.
  The Hubbell products listed in the table below comply with all requirements specified in this document

HUBBELL CATALOG NUMBER	Description
P6E48U	NEXTSPEED® Category 6 Patch Panel, 48-Ports
PCBLMGT	Rear Cable Management Bar

- Or approved equal of: Ortronics, Panduit, Systimax, Leviton

4. Category 6 Patch Panel Installation Requirements

- Horizontal and backbone cabling of the proper category shall be fully deployed into the TR, TE, or ER according to applicable codes and standards.
- Cable slack, service loops, bend radii, and pathway fill ratio shall comply with applicable codes and standards.
- Racks, cabinets, enclosures, and metallic cable pathways shall be bonded to an approved ground according to ANSI-J-STD-607-A.

- Cable ends for termination shall be clean and free from crush marks, cuts, or kinks left from pulling operations.
- Properly mount patch panels into the designated rack, cabinet, or bracket locations with the #12-24 screws provided.
- Terminate cables into the patch panel according to manufacturer's instructions.
- To maximize transmission performance, maintain wiring pair twists as close as possible to the point of termination.
- The length of wiring pair un-twist in each termination shall be less than 0.5 inches (13 mm).
- Horizontal or backbone cables extending from the panel terminations shall maintain a minimum bend radius of at least 4 times the cable diameter.
- Cable terminations shall have no tensile or bending strain on panel IDC contacts in each installed location.
- Panels shall be properly labeled on front and back with the cable number and port connections for each port.

B. Fiber Enclosures, Adapter Plates, Connectors

1. Fiber Adapter Enclosure Requirements

- Enclosure design shall be a modular, rack-mounted, powder coated formed cold rolled steel enclosure with a removable front cover, rear panel, top panel, and slide-out inner tray.
- Each basic unit delivered shall consist of: (1) enclosure assembly, (2) mounting brackets, (6) cable ties, (5) snap-in cable clips (4) #12-24 mounting screws, (1) adhesive grid label, (4) adhesive cable clips, (2) Velcro cable ties, (3) label holders, and (1) splice tray stud, wing nut, and spacer.
- Material shall be as follows:
  a. Enclosure, panels and tray: 16 gage cold rolled steel (CRS)
  b. Mounting brackets: 14 gage CRS
  c. Front cover: Acrylic (Plexiglas)
- Basic dimensions of the enclosures shall be approximately 17" wide by 12" deep.
- Enclosures shall be available in heights of 3.5" (2 RMU), 5.25" (3 RMU), and 7" (4 RMU) versions.
- Finish shall be black durable powder coat on all surfaces.
- Front door shall be Lexan plastic, hinged at the bottom, with a cap-plugged hole to accept an optional lock. Front door shall also be removable in the fully open position by sliding left off the mounting pins.

- Front door shall be secured in the closed position with lever-action quick-release latches.
- Top cover shall be removable in the forward direction, without fasteners, to provide access to the connector field. Top panel shall also have knockouts for backbone cable entry.
- Rear panel shall be removable without fasteners.
- Enclosure shall be equipped with panel-mounting brackets assembled for 19" rack mounting, compliant to ANSI/EIA-310-D.
- Panel mounting brackets shall be configurable to either 19" or 23" racks.
- Enclosure chassis shall have two mounting bracket locations for either flush mount or center mount on the rack.
- Rear of enclosure shall have two knockouts, top and bottom, for backbone cable entry and internal routing.
- Front of enclosure chassis shall have side cutouts for patch cord entry into, and exit from the enclosure.
- Inner tray shall slide out in the forward direction by releasing the lever-action quick-release latches. Tabs in the chassis shall engage with slots in the inner tray in the outward position to prevent tray from falling out.
- Inner tray shall have rear-located knockouts to match rear chassis knockouts.
- Inner tray panel mounting posts shall accept modular adapter panels, in high- or low-density versions. Adapter panels shall be available in ST multimode/singlemode.
- Splice tray mounting boss shall also accept a stud for mounting blown fiber adapter brackets.
- Inner tray shall have clips for cable ties, and holes to accept snap-in cable clips, front and rear, for complete cable management of patch cords and distribution cable strands.
- Inner tray shall have rear cable tie-down features to accept various diameter backbone cables entering the enclosure.

2. Fiber Adapter Panels Requirements

- Fiber adapter panels shall be a modular, quick-fastening steel plate, powder coated to match the enclosure finish.
- Fiber adapter panels shall have pre-installed SC fiber adapters, available in low- or high-density multi-mode or single-mode applications.
- Each individually bagged unit delivered shall consist of: (1) fully assembled adapter panel, with push-pull fasteners pre-installed.
- Adapter panels shall be constructed of 16 gage cold rolled steel.
- Finish shall be black durable powder coat on all surfaces.

- Basic dimensions of the FSP panels shall be 5.10” length by 1.10” wide.
- Panels shall have two pre-installed, push-pull type quick-release fasteners for quick snap-in installation. Push-pull fasteners shall have an industry standard center distance of 4.65”.
- Panels shall be suitable for mounting either vertically or horizontally.
- Panels shall be available in with SC adapters with precision ceramic alignment sleeves.
- All fiber adapters installed in FSP panels shall have dust caps installed.
- Panels shall be available in low-density and high-density adapter patterns.

3. Fiber Connector Requirements

- Please note OM4 minimum standard

    i. Internal Building Installation

        1. Installation distances LESS than 1640ft/500m should use OM4-Multimode Fiber.

        2. Installation distances GREATER than 1640ft/500m require use of single Mode fiber exclusively.

    ii. External Building/Campus Installation

        1. Buildings less than 1640ft/500m may use OM4-Multimode Fiber, but use of mixed strand OM4/Single Mode fiber is highly recommended.

        2. Installation distances GREATER than 1640ft/500m require use of Single Mode fiber exclusively.

- Connector basic design shall be a factory pre-polished SC optical fiber connector with a zirconium ceramic ferrule. Integral with the connector body is a wedge-activated fiber clamping mechanism to secure the inserted fiber into a mechanical splice with the factory installed cleaved fiber stub. Index-matching gel is supplied factory-injected into the cleaved fiber stub splice to optimize transmission performance. Connector attachment is achieved without tools, by inserting a field-cleaved optical fiber and then extracting the disposable clamp wedges from the connector body.
- Each basic connector unit delivered shall consist of: (1) connector body with disposable clamp wedge, (1) strain relief boot, and (1) plastic dust cap.
- SC multimode factory pre-polished connectors shall be 50 micron laser optimized pre-installed fiber.
- Connector termination method shall utilize an industry standard multi-layer strip tool and bare fiber cleave tool as the only field tools required.
- SC connectors shall have features to enable field verification using a Visual Fault Locator (VFL) during termination.

- Connector materials shall be designed with thermal stability to comply with environmental requirements of ANSI/TIA/EIA-568-B.3 and Telcordia GR-1081-CORE.
- Multimode OM4 and singlemode pre-polished fiber connector materials shall be as follows:
    a. Ferrule: zirconium ceramic
    b. SC inner body: thermally stable injection molded thermoplastic
    c. Dust Cap: nylon or PVC
    d. Strain relief boot: UL94-V0 molded PVC
- Pre-polished SC connectors shall require no field polishing.
- Pre-polished Multimode-OM4 SC connector body shall be industry standard aqua for 50 micron multimode, laser optimized.
- colors for specific applications, as designated below:
- Pre-polished OM4 SC connectors shall require no adhesives for termination.
- SC connector internal fiber clamping mechanism shall firmly secure both the inserted glass fiber and the 900 micron buffer layer of the inserted fiber for maximum strain relief.
- All standard mating and interface dimensions for SC connectors shall comply with ANSI/TIA/EIA-604-10 (FOCIS 10).
- Ferrule outside diameter for SC multimode connectors shall be 1.2467mm to 1.2497mm.
- Ferrule outside diameter for SC singlemode connectors shall be 1.2483mm to 1.2497mm.
- SC ferrule tip shall have a PC spherical radius of approximately 7.0 mm radius for multimode and singlemode versions.
- Delivered connectors shall be individually bagged with the dust cap installed to protect from contamination.
- Delivered connectors shall have the disposable clamp activation wedge element pre-installed onto the connector body.
- Connector design and termination technique shall be independent of cable type or manufacturer, and shall be compatible for either 900 micron buffer or 250 micron buffer distribution cables.
- SC connector strain relief boot shall be a Telcordia style slotted design for maximum flexural strain relief.
- Strain relief boot shall be black for multimode, and yellow for singlemode.
- SC connectors shall be available individually bagged in packs of 12.

- Pre-polished SC fiber connectors, when properly installed onto qualified cable, shall meet the 10 Gb/s Ethernet performance requirements of IEEE802.3.
- Pre-polished SC fiber connectors, properly installed onto qualified cable, shall exceed the mechanical and environmental performance requirements of ANSI/TIA/EIA-568-C.3, Annex 'A'.
- Pre-polished SC fiber connectors, properly installed onto qualified cable, shall exceed the mechanical and environmental performance requirements of Telcordia GR-1081-CORE.
- Qualification test data shall be available from the manufacturer upon request.

4. Acceptable Manufacturers:

- Hubbell Premise Wiring.
  The Hubbell products listed in the table below comply with all requirements specified in this document

HUBBELL CATALOG NUMBER	Description
FCR350SP36R	Fiber Enclosure - 2U Rack Mount Fiber Enclosure, Accepts 6 Adapter Panels
FCR350SP54R	Fiber Enclosure - 2U Rack Mount Fiber Enclosure, Accepts 9 Adapter Panels
FCR525SPR	Fiber Enclosure - 3U Rack Mount Fiber Enclosure, Accepts 12 Adapter Panels
FCR700SP	Fiber Enclosure - 4U Rack Mount Fiber Enclosure, Accepts 15 Adapter Panels
FSPLCDM6AQ	Fiber Adapter Panel - 6 LC Duplex, Aqua for MM – Phosphor Bronze Sleeves
FSPLCQM6AQ	Fiber Adapter Panel - 6 LC Quad, Aqua for Multimode – Phosphor Bronze Sleeves
FSPLCDS6	Fiber Adapter Panel - 6 LC Duplex, Blue for SM – Zirconia Ceramic Sleeves
FSPLCQS3	Fiber Adapter Panel - 6 LC Quad Blue for SM – Zirconia Ceramic Sleeves
	Fiber Connector - LC, MM, 50/125um, OM4 – Aqua, Box of 12
FCLC900K50GM12	Fiber Connector - LC, SM, 9/125 UPC – Blue Box of 12

- Or approved equal of: Ortronics, Panduit, Systimax, Leviton

5. Fiber Installation Requirements

- For FCR-series enclosures, remove top and rear covers, and front door.
- Punch out the desired knockouts for cable entry.
- Using proper method, pull cables into cabinet through the desired knockout entry location.

- Strip the outer sheath and sub sheaths of the fiber cable to provide at least (2) meters service loop of the individual buffered fiber strands.
- Anchor the outer cable sheath into the rear channel of the inner tray using the cable ties provided. Note: in FCR-series enclosures, leave enough slack in the main cable to allow free motion of the inner tray fully outward. Remove cable entry knockouts as required.
- Installed copper and fiber cabling shall be properly strain relieved. Cable service coil, bend radius, and pathway fill ratio shall comply with applicable codes and standards.
- Use the plastic adhesive-backed clips provided to form the fiber strands into a large service coil on the surface of the inner tray. For FCR-series enclosures, be sure the inner tray has full mobility in and out, with no cable kinks or snags.
- Close inner tray and front cover, and lock the quick-release fasteners.
- Install SC fiber adapter panels by firmly using push fasteners to lock in place.
- Leave dust caps installed in the fiber adapter plates until connector termination is performed.
- Follow manufacturer's termination instructions for pre-polished connectors as specified
- Uncoil the 900-micron buffered strands of cable from the service loop and set-up for termination.
- Un-package the connector, and leave dust cap installed. Firmly press downward on the connector wedge tab to fully seat clamp wedges.
- Slide the strain relief boot onto the fiber strand before stripping.
- Using a fiber strip tool, strip buffered fiber completely to approx. 1.0" of exposed glass fiber.
- CAUTION: Do not nick or scrape the glass fiber with the strip tool.
- Wipe the glass fiber firmly with an alcohol wipe. Always use 99.9% pure reagent grade alcohol for fiber cleaning.
- Mark the 900 micron buffer layer from the strip-off point per instructions.
- Insert the fiber into the cleave tool and cleave the fiber to the specified length from the end of the 900 micron buffer layer. Always keep the cleave tool clean.
- CAUTION: Always dispose of glass fiber waste in an approved container.
- Gently insert the cleaved fiber into the connector body. Rotate connector slightly during insertion to fully seat the fiber into the internal splice.
- Hold the seated fiber in place using slight force to form a bow in the fiber.
- Y CAUTION: Do not allow the installed fiber to slip backward.
- While holding the fiber seated, squeeze the wedge holder device to activate the clamp, and

then slip the wedge holder off the connector body. Dispose the wedge holder.

- Remove the connector dust cap and inspect the ferrule tip. A 400X microscope is recommended. View of the polished fiber should be a smooth round circle with no scratches, pits, cracks or chips. Use a lint-free wipe to clean off any contamination.
- Y CAUTION: Do not view ends of live fibers, with or without a microscope.
- Plug the connector into the proper adapter panel and proceed with the next connector. Leave dust cap installed if the connector is not mated.

C. Racks, Horizontal & Vertical Managers

1. Equipment Racks Requirements

- Racks shall be a structural aluminum construction, having two 6-inch deep rails.
- Racks shall feature universal side mounting hole pattern for vertical cable managers.
- Racks shall feature a weight load capacity of 1,000 lbs when properly secured to the floor.
- Each basic rack delivered shall consist of: (2) vertical rails, (2) base angles, (1) assembly hardware kit, (2) top angles, and (20) #12-24 dog point machine screws for panel mounting.
- Racks shall be available in either for 19-inch standard rack configurations.
- Tapped holes in the front and rear vertical rails for mounting of panels shall be #12-24 thread size. Powder coat shall not interfere with thread fit.
- Standard rack heights of 8 ft (96 in)
- Racks with heights of 8 ft shall have a capacity of 51 rack mount units
- Rack base angles shall be pre-drilled for floor mounting, and for assembly to vertical rails.

2. Horizontal Managers Requirements

- Horizontal Managers shall be 19”W, 3.5”H
- Horizontal managers shall be 16ga. Cold rolled steel construction with (6) pass thru holes, and (7) Front mounted 3.5” steel rod D-Rings.
- Horizontal managers shall have hinged Aluminum front cover to conceal patch cords.

3. Vertical Managers Requirements

- Vertical cable managers shall be 14”D, 10”W
- Vertical cable managers shall feature a steel rod construction for increased air flow.

- Vertical cable managers shall feature a solid aluminum door that is designed to open left or right and swing out of way for cable management.
- Vertical cable managers shall feature power strip mounting brackets on rear of manager.
- Vertical cable manager shall accept and include (16) 3" black cable management spools.

4. Acceptable Manufacturers:

- Hubbell Premise Wiring.
  The Hubbell products listed in the table below comply with all requirements specified in this document
- Cooper B-Line.
  The Cooper B-Line products listed in the table below comply with all requirements specified in this document

HUBBELL CATALOG NUMBER	Description
HPW84RR19D	84”H, 6”D Equipment Rack
HC219CE3N	2U Horizontal Manager w/ 3.5” Front rings and cover
XS1010	Vertical Cable Manager, 14”D, 10”W, with door & cable spools

B-Line CATALOG NUMBER	Description
SB55608419U6	84”H, 6”D Equipment Rack
SB87019S2FB	2U Horizontal Manager w/ 3.5” Front rings and cover
SB860810S084	Vertical Cable Manager, 14”D, 10”W, with door & cable spools

- Or approved equal of: Ortronics, Systimax, Leviton

D. Category 5e-110 Termination Blocks

1. 110 Termination Block Requirements

- Category 5e-110 wiring blocks shall be available in 50-pair, 100-pair and 300-pair capacities, with or without detachable standoff legs.
- Wiring blocks shall be available as kits that include wiring blocks, label strips, and the appropriate quantity of connecting blocks for termination to full capacity.
- Connecting blocks shall accommodate a 5-pair punch-down tool designed specifically for the purpose of Category 5e termination.
- Wiring blocks and connecting blocks shall be constructed of UL94-V0 rated high-impact flame-retardant polycarbonate blend thermoplastic.
- Wiring blocks shall accept 26-22 AWG solid or stranded conductors
- Wiring blocks shall accept conductor insulation diameters of .050 in to .070 in maximum.

- Wiring blocks and connecting blocks shall have a temperature rating of 14 °F to 140°F with up to 95% non-condensing humidity.
- Wiring blocks shall have through-openings to permit rear cable entry and direct routing to each point of termination.
- Connecting blocks shall connect to the wiring block with a locking force of 35 Lb minimum.
- Connecting blocks shall withstand a minimum of 200 re-terminations without degradation to electrical or mechanical performance.
- IDC contact termination towers on the connecting blocks shall have tapered pair-splitting features to aid wire insertion and minimize pair un-twist. IDC towers shall also have high-definition color-coding.

2. 110 Termination Block Performance Requirements

- A UL or ETL third party testing organization shall independently verify all Category 5e transmission performance parameters.
- Category 5e-110 termination blocks shall meet or exceed Category 5e transmission requirements for connecting hardware, as specified in ANSI/TIA/EIA-568-B.2.
- The manufacturer shall provide Category 5e component compliance certificates from third party testing organization upon request.
- 5e-110 termination blocks shall be UL LISTED 1863.
- 5e-110 termination blocks shall exceed IEEE 802.3 DTE Power specification to 4 times the rated current limits with no degradation of performance or materials.
- 5e-110 termination blocks shall be third party verified, error free Gigabit Ethernet performance to IEEE 802.3 standard.
- 5e-110 termination blocks shall meet or exceed the 4-connector channel performance requirements of Category 5e, per the ANSI/TIA/EIA-568-B.2.

3. Acceptable Manufacturers:

- Hubbell Premise Wiring.
  The Hubbell products listed in the table below comply with all requirements specified in this document

HUBBELL CATALOG NUMBER	Description
110BLK50FTK5	110 Field Termination Kit, 5e-110/50-pair with 5-Pair Conn. Blocks
110BLK100FTK5	110 Field Termination Kit, 5e-110/100-pair with 5-Pair Conn. Blocks
110BLK300FTK5	110 Field Termination Kit, 5e-110/300-pair with 5-Pair Conn. Blocks

- Or approved equal of: Ortronics, Panduit, Systimax, Leviton

4. 110 Installation Requirements

- Follow manufacturer's instructions.
- Mount 5e-110 wiring blocks in the desired location.
- Route cables through the openings in the wiring block base.
- Terminate UTP cables to the 5e-110 block according to manufacturer's instructions, using the connecting blocks and proper termination tool.
- To maximize transmission performance, maintain wiring pair twists as close as possible to the point of termination.
- The length of wiring pair un-twist in each termination shall be less than 0.5 inches (13 mm).
- Cables extending from the block terminations shall maintain a minimum bend radius of at least 4 times the cable diameter.
- Cable terminations shall have no tensile or bending strain on IDC contacts after termination. Note: Use the appropriate cable management hardware to relieve cable strain and control bend radius.

PART 11 INFORMATION OUTLETS – DATA & VOICE

A work area has at least one standard Information Outlet consisting of two Data RJ45 jacks. All of the RJ45 jacks shall be Category 6 unless otherwise specified are wired according to the **568B** standard.

- DATA & VOICE Cabling Requirement Scenarios
  - DATA PC & VOIP Telephony INFORMATION OUTLET
    - 2x DATA RJ45 CAT 6 Jacks per Information Outlet
    - No Traditional Voice Wiring Required
  - DATA PC & TDM/Digital or Analog Phones/PBX
    - 2x DATA RJ45 CAT 6 Jacks per Information Outlet
    - 1x Voice CAT 5e Jack per Information Outlet

A. Information Outlet Locations

1. The location of the information outlets is dependent on the environment in which the outlets will be installed. An office environment certainly is different than a laboratory, training room, or manufacturing area. If the outlets are to be wall- mounted, the bottom of the outlet is to be located 15" above of the finished floor under normal conditions. However, there are many exceptions to this rule. If there is existing equipment that does not allow for this, such as a credenza or countertop, the outlet must be placed at a height appropriate to the situation.
2. Locate the outlet where it is closest to the equipment and people it will serve. Keep in mind that the cord from the outlet to the device can be a trip hazard or may span across doors. In an office

environment, each desk or workstation should have an information outlet. If a particular area has a series of fax machines or modems, then additional outlets should be installed. The number of jacks in an outlet is standard, so to maintain the standard, additional information outlets of the same configuration should be installed; do not install non-standard outlets.

3. Computer laboratories or training rooms require a large amount of connectivity in odd locations. Power poles are one solution as is the use of surface-mounted raceway or floor-mounted boxes. Each situation is different and must be considered individually. Again, standards are to be maintained in outlet configurations.
4. When locating an outlet, consideration should be given to the route the cable must take to the information outlet. If the outlet is to be installed on a masonry wall and surface-mount raceway is used for cable routing, the location of the outlet may be more dependent on the path available down or across the wall than where the equipment is located. Each location must be looked at individually to determine if the route to the desired outlet location is possible.
5. Wall-mounted outlets should not be located on heating units, equipment or ductwork. They are always to be located on either a gypsum, sheetrock, or masonry wall.
6. A description of the information outlet configurations follows:
   - Standard Office Information Outlets consist of: as detailed on the drawings attached to the contract, the contractor will install and terminate (3) four-pair, one UTP Category 6 or 6a for Data cables onto individual RJ45 female jacks.
   - Computer Laboratory or Training Room Information Outlets: as indicated on the attached drawings, the contractor will install and terminate the designated series of four-pair UTP Category 6 or 6a cables onto individual RJ45 jacks. The number of cables and jacks vary from two to eight, depending upon the furniture configuration and number of PCs to be served.

B. Category 6 Jacks

In new construction projects, the default cabling infrastructure shall be Category 6 unless specified otherwise.

1. Category 6 Jack Requirements

- Jacks shall be standard 8-position, RJ-45 style, un-keyed, FCC compliant.
- Jacks shall be designed for 4-pair, 100 ohm balanced unshielded twisted pair (UTP) cable.
- Each jack shall be single unit construction, with snap – fit to industry standard keystone opening (.760” x .580”).
- Jack housings shall fully encase and protect printed circuit boards and IDC fields.
- Modular jack contacts shall accept a minimum of 2000 mating cycles without degradation of electrical or mechanical performance.
- Jack contacts shall be constructed of Beryllium copper for maximum spring force and durability.
- Contact plating shall be a minimum of 50 micro-inches of hard gold in the contact area over 50 micro-inch of nickel.
- Jack termination method shall follow the industry standard 110 IDC punch-down

- Jacks shall be compatible with a 4-pair single punch impact tool designed specifically for the purpose.
- IDC contact termination towers shall have tapered pair-splitting features to aid wire insertion and minimize pair un-twist.
- Jacks shall terminate 26-22 AWG solid or stranded conductors.
- Jacks shall terminate insulated conductors with outside diameters up to .050".
- Jacks shall not require special cords, specialty tools or special installation requirements.
- Jacks shall include a translucent stuffer cap for wire retention and to permit visual inspection.
- Stuffer cap shall have retention snaps to assure conductor strain relief.
- Jacks shall accept FCC compliant 6 position plugs.
- Jacks shall accept optional hinged dust covers.
- Jacks shall be compatible with ANSI/TIA/EIA-606-A color code labeling.
- Jacks shall accept snap-on icons for specific identification.
- Jacks shall be available in various colors to meet specific customer applications.
- Jacks shall have attached wiring instruction labels to permit either T568A or T568B wiring configurations.
- Category 6 jacks shall be backward compatible with existing Category 3, 5, and 5e cabling systems for fit, form, and function.

2. Category 6 Jack Performance Requirements

- All transmission performance parameters shall be independently verified by a UL or ETL third party testing organization.
- Category 6 jacks shall exceed Category 6 transmission requirements for connecting hardware, as specified in ANSI/TIA/EIA-568-B.2-1, Transmission Performance Specifications for 4-Pair 100 ohm Category 6 Cabling.
- Category 6 jacks shall exceed 10 Gb/s transmission requirements for connecting hardware, under the constraints of ANSI/TIA-TSB-155 (current draft).
- The manufacturer shall provide Category 6 component compliance certificates from third party testing organization upon request.
- Jacks shall be UL LISTED 1863 and CSA certified.
- Jacks shall exceed IEEE 802.3 DTE Power specification to 4 times the rated current limits with no degradation of performance or materials.

- Jacks shall be third party verified, error free Gigabit Ethernet performance to IEEE 802.3 standard.
- Jacks shall exceed 4 Gb/s data transmission capacity within the bandwidth of 1 – 250 MHz when configured in a 4-connector channel.
- Jacks shall exceed the 4-connector channel performance requirements of Category 6, per the ANSI/TIA/EIA-568-B.2-1 standard.
- Jacks shall exceed the 4-connector Category channel performance requirements for 10 Gb/s transmission over Category 6, according to TIA/TSB-155 (current draft).
- The 4-connector channel test configuration shall utilize Category 6 patch panels and Category 6 patch cords, from the same manufacturer, with qualified Category 6 cable.

3. Acceptable Manufacturers:

- Hubbell Premise Wiring.
  The Hubbell products listed in the table below comply with all requirements specified in this document

HUBBELL CATALOG NUMBER	Description
HXJ6xx	NEXTSPEED® Category 6 Jack

xx = Jack color. Replace xx with “W” for White, “BK” for Black, “B” for Blue, “GY” for Gray, “GN” for Green, “OW” for Office White, “OR” for Orange, “R” for Red, “Y” for Yellow. Refer to project drawing for color applications.

- Or approved equal of: Ortronics, Panduit, Systimax, Leviton

4. Category 6 Jack Installation

- Horizontal cabling of the proper category shall be fully deployed from the TR or TE to each wall plate location according to applicable codes and standards.
- Cable slack, service coil, bend radii, and pathway fill ratio shall comply with applicable codes and standards.
- Metallic horizontal cable pathways shall be bonded to an approved ground according to ANSI-J-STD-607-A.
- Cable ends for termination shall be clean and free from crush marks, cuts, or kinks left from pulling operations.
- Terminate jacks according to manufacturer’s instructions.
- To maximize transmission performance, maintain wiring pair twists as close as possible to the point of termination.
- The length of wiring pair un-twist in each termination shall be less than 0.5 inches (13 mm).

- Jacks shall be properly mounted in plates, frames, or housings with stuffer cap fully installed over IDC contacts.
- Horizontal cables extending from mounted jacks shall maintain a minimum bend radius of at least 4 times the cable diameter.
- Cable terminations shall have no tensile or bending strain on IDC contacts after assembly of faceplate or housing to the wall outlet.
- Jacks shall be tested as part of the installed horizontal cabling system, with faceplates assembled complete and properly mounted.
- Each link or channel in the horizontal cabling system shall be identified and tested individually, using an industry standard level III tester with correct settings.
- Each jack shall be tested as part of the horizontal channel or link for the parameters listed below.

C. Face Plates

1. Face Plate Requirements

- Faceplates shall be constructed of high impact, UL94 V-0 rated thermoplastic.
- Faceplates shall be 2.75" W x 4.5" H (69.8 mm x 114.3 mm) for single gang and 4.5” X 4.5” (114.3 X 114.3 mm) for double gang.
- Port size in each faceplate shall be industry standard vertical keystone opening size (.760” x .580”).
- Faceplates shall accept Hubbell XJ-series UTP jacks and Snap-Fit fiber optic, audio, and video modules for multimedia applications.
- Faceplates shall provide for ANSI/TIA/EIA-606-A compliant workstation outlet labeling.
- Faceplates shall be provided with clear plastic and color-matched label field covers.
- Color-matched blank Snap-Fit modules shall be available separately to fill unused ports and openings as required.
- Two #6-32 pan head Phillips/slotted mounting screws shall be included with each single gang faceplate.
- Four #6-32 pan head Phillips/slotted mounting screws shall be included with each double gang faceplate.
- Jacks and Snap-Fit modules shall snap firmly into rear of faceplate and position flush to outer plate surface.
- Faceplates shall be compatible with standard NEMA openings and boxes.

- Faceplates shall be compatible with raceway fittings, surface mount boxes, service fittings, flush mount boxes and drywall rings.

2. Acceptable Manufacturers:

- Hubbell Premise Wiring.
  The Hubbell products listed in the table below comply with all requirements specified in this document

HUBBELL CATALOG NUMBER	Description
IFP11xx	1-Gang, 1-Port IFP Face Plate
IFP12xx	1-Gang, 2-Port IFP Face Plate
IFP13xx	1-Gang, 3-Port IFP Face Plate
IFP14xx	1-Gang, 4-Port IFP Face Plate
IFP16xx	1-Gang, 6-Port IFP Face Plate
IFP26xx	2-Gang, 6-Port IFP Face Plate
IFP29xx	2-Gang, 9-Port IFP Face Plate
IFP212xx	2-Gang, 12-Port IFP Face Plate

xx = Face Plate color. Replace xx with “W” for White, “BK” for Black, “GY” for Gray, “OW” for Office White, to project drawing for color applications.

- Or approved equal of: Ortronics, Panduit, Systimax, Leviton

PART 12 CABLE ROUTING SYSTEMS

Each cable routing system has advantages and disadvantages. Particular systems are favored for a variety of reasons, including architectural considerations, appearances, cost, local ordinances, and material concerns.

Various means of distributing cable from Communications/Data rooms/closets to the user work areas are identified in the following:

A. Ceiling Distribution System

A distribution system within an accessible area above a false ceiling. This could either be a plenum area (where there is no enclosed system for cable routing) or an overhead conduit system (which has defined areas of access and routes).

B. “J” Hooks

Where not installed in conduits, cable trays, or other supporting devices, the horizontal wiring plan is to be installed onto “J” hooks or an acceptable equivalent from the information outlet to the termination point within the IDF or MDF/IDF room. The “J” hooks are to be installed a maximum of five feet apart and fastened to the ceiling or the top of the walls near the ceiling. The cables are to be tie-wrapped to the “J” hooks, without crimping the sheath. The cable contractor is to furnish and install the “J” hooks. Cooper B-Line BCM 21, 32, and 64 are acceptable.

C. Sleeves and Conduits

1. The use of conduits and sleeves within a building is common for the transport of communications cable. Conduits and sleeves are to be sized and routes are to be planned within and between buildings in order to route the cable plant from the MDF to IDF and IDF to Information Outlet, and to accommodate any additional cabling required. The sizing of the conduits and sleeves is to be based on the number of cables, the location and environment surrounding the sleeve or conduit, and acceptable conduit fill levels, which are typically 40%. All conduits are to be installed with the appropriate sweep to maintain the required bend radius for copper and fiber optic cable. All sleeves and conduits are to be installed with bushings and suspended according to building industry standards.

2. The following are guidelines to use in determining where sleeves and conduits are to be installed but does not limit nor identify all areas or situations where sleeves and conduits will be required.

   - All masonry walls that have cables passing through them are to have sleeves installed.
   - Gymnasiums and athletic areas are to have conduits installed to house cables passing through the area.
   - Each MDF and IDF Room is to have sleeves installed to contain the large number of cables exiting the room. Conduits are to be installed in areas where cables extend from one building to another via covered or enclosed bridges and corridors.

3. Cable routing is to follow a “streets and avenues” path in corridors where possible. However, there are a number of reasons for exceptions. In some cases, the corridors do not allow cables to be run because of architectural constraints or inaccessible ceilings. Also, in order to maintain the 90-meter standard for Category 6 cabling, some cables need to be run separately and diagonally to isolated information outlets. Throughout all runs, the contractor is to maintain EIA/TIA standards regarding the proximity of communications cabling to high voltage cabling, motors, transformers, fluorescent lighting, ballasts, etc.

PART 13 CABLING-GENERAL

A. All cable shall meet the requirements of the NEC, except where other authorities or codes impose a more stringent requirement or practice. Codes, such as the NEC, do not normally include transmission performance requirements. This section specifies the essential media transmission characteristics. It is advisable to consult standards associated with the planned service or equipment to determine any specific media limitations.

B. Contractor is to take all necessary precautions to assure that the maximum tensile load and minimum bend radius of all cables (fiber and copper) are not exceeded. When terminating Category 5e & 6 cable, care should be taken to maintain pair twists up to the termination point and not more than 0.5" of the cable pairs shall be untwisted. It is preferred that the cable sheath is also not removed more than 0.5" from the termination point. Tie wraps are to be hand-tightened on cables and are not to crimp the sheath. Contractor is responsible for protecting all connectorized cables from damage by other contractors at the information outlet before and after installation of the outlet faceplates.

C. All riser and station cable installed is to be plenum-rated cable. The fluoropolymer resin that insulates Category 5e & 6 plenum cables is engineered as a fire safety innovation. The NEC requires that all cable installed in plenum spaces and not encased in conduit must have certain fire resistance and low smoke producing characteristics. Not only are such cables highly resistant to fire but they also produce very little smoke.

D. For all new Voice cabling installed, "110" blocks shall be used for termination. The Copper Data cabling will be terminated onto Category 6 RJ45 Patch Panels. The fiber optic cabling will be terminated onto fiber distribution panels with SC connectors.

E. Cables shall be terminated on the appropriate unassigned (vacant) portions of the wall-mounted Main and Intermediate Distribution Frames or Patch Panels and run as uninterrupted conductor sections to the Information Outlets. All cable terminations shall be made uniformly in sequence, commencing with termination of the first cable pair on the first connection points in the upper left-hand corner of each block.

F. Minimum separation distances between pathways and power wiring of 480 V or less are shown in Table 1, below.

Table 1 Separation of Communications Pathways from <= 480V Power Lines

	Minimum Separation Distances		
Condition	< 2 kVA	2-5 kVA	> 5 kVA
Unshielded power lines or electrical equipment in proximity to open or nonmetal pathways.	127 mm (5 in)	305 mm (12 in)	610 mm (24 in)
Unshielded power lines or electrical equipment in proximity to a grounded metal conduit pathway	64 mm (2.5 in)	152 mm (6 in)	305 mm (12 in)
Power lines enclosed in a grounded metal conduit (or equivalent- shielding) in proximity to a grounded metal conduit pathway.	76 mm (3 in)	152 mm (6 in)	

All cabling shall be at least:

- 12” from high voltage lighting and fluorescent fixtures
- 72” from transformers and motors

PART 14 HORIZONTAL CABLING - CATEGORY 6 UTP DATA

All riser and station cable installed is to be plenum-rated cable.

A. Category 6 100 OHM balanced UTP Cable Requirements

In new construction projects, the default cabling infrastructure shall be Category 6 unless specified otherwise.

1. Cable construction shall be four twisted pairs of 23 AWG insulated solid conductors, with a ripcord, surrounded by a tight outer jacket.
2. Conductor diameters shall be 0.0224” ± .0003” solid copper.
3. Conductor insulation diameter shall be 0.039” ± .0005” fluoro copolymer.
4. Outer jacket diameter shall be 0.235” ± .008” low smoke PVC, with a nominal wall thickness of 0.015”.
5. Ripcord shall be directly underneath the outer jacket.
6. Cable shall be marked every 2 ft including
   - Cable Manufacturer
   - Cable Description

- Month and Year of manufacture.
- Job number.

7. UL, ETL, or CSA agency certification or verification markings shall be marked on the cable jacket according to the certifying agency's requirements.
8. Color coding of the pairs shall be as follows:
   - Pair 1: White/Blue; Blue
   - Pair 2: White/Orange; Orange
   - Pair 3: White/Green; Green
   - Pair 4: White/Brown; Brown
9. Cable shall be supplied in 1000 ft spools or 1000 ft Reelex boxes.

B. Category 6 100 OHM balanced UTP Cable Performance Requirements

1. All transmission performance parameters shall be independently verified by a UL or ETL third party testing organization.
2. Cable shall exceed Category 6 transmission requirements specified in ANSI/TIA/EIA-568-B.2-1, and shall be tested through 550 MHz.
3. Worst-case cable performance shall be +8.0 dB headroom over current TIA/EIA and ISO standards limits for NEXT and PSNEXT loss, and ELFEXT and PSELFEXT loss.
4. Insertion loss shall be 3.0% lower than standard Hubbell Category 6 plenum and riser cables described in Section 27 15 13.
5. Worst case electrical performance characteristics shall be as follows:
   - Characteristic Impedance: 100 + 15 (1.0-100 MHz) 100 + 20 (101-250 MHz)
   - Maximum Conductor Resistance: 9.38 /100 Meters @ 20°C
   - Maximum Resistance Unbalance: 3%
   - Maximum Mutual Capacitance: 5.6 nF/100 Meters @ 1 kHz
   - Maximum Capacitance Unbalance: 330 pF/100 Meters
   - Maximum Delay Skew: 25 ns/100 Meters
6. The manufacturer shall provide Category 6 component compliance certificates from third party testing organization upon request.
7. Cable shall be UL and C(UL) listed.
8. Cable shall exceed IEEE 802.3af DTE Power specification to 4 times the rated current limits with no degradation of performance or materials.
9. Cable shall be third party verified, error free Gigabit Ethernet performance to IEEE 802.3ab.
10. Cable shall exceed the requirements of TIA/TSB-155: 10 Gb/s Ethernet Operation over 55 Meters Channel Length.
11. Cable shall meet or exceed the 4-connector channel performance requirements of Category 6, per the ANSI/TIA/EIA-568-B.2-1 standard.
12. The 4-connector channel test configuration shall utilize Category 6 jacks and patch panels, with Category 6 patch cords, from the same manufacturer, with qualified Category 6 cable.

C. Acceptable Manufacturers:

1. Hubbell Premise Wiring and Hitachi Cable Manchester (HCM)
   The Hubbell products listed in the table below comply with all requirements specified in this document

HUBBELL CATALOG NUMBER	Description

C6SPxx	NEXTSPEED Category 6 550 MHz – Plenum Spool
C6RPxx	NEXTSPEED Category 6 550 MHz – Plenum REELEX

xx = Cable color. Replace xx with "W" for White, "GY" for Gray, "B" for Blue, "Y" for Yellow. Refer to project drawing for color applications.

HITACHI CATALOG NUMBER	Description
30025-8xx	Category 6 – Plenum Spool
30024-8xx	Category 6 550 MHz – Riser Spool

xx = Cable color. Replace xx with "WH" for White, "GY" for Gray, "BL" for Blue, "Y" for Yellow. Refer to project drawing for color applications.

2. Or approved equal of: Belden, Berk-Tek, Systemax

D. Category 6 100 OHM balanced UTP Cable Installation Requirements

1. Pull cable into conduits, or place into raceway or cable tray as specified. Do not exceed 25 Lb pull force per cable. Use appropriate lubricants as required to reduce pulling friction.
2. All exposed wiring shall be installed in surface raceway.
3. All wiring above ceilings or below access floors shall be installed in cable tray or open-top cable hangers.
4. Cable slack and service loops shall be stored properly above the ceiling or under the access floor. A "figure-eight" service loop is recommended for Category 6 cabling to reduce EMI coupling.
5. Pathway fill ratio in conduit, tray, raceway, etc. shall not exceed 40% of pathway cross-sectional area.
6. Installed cable bend radius shall be greater than 4X cable diameter. Avoid kinking or twisting the cable during installation.
7. Do not over-tighten cable ties, and do not use staples or clamps to anchor cables. Velcro straps are recommended.
8. Recommended spacing of cable supports above the ceiling shall be 48".
9. Maintain the following clearances from EMI sources:
   - Power cable: 6 in.
   - Florescent lights: 12 in.
   - Transformers and electrical service enclosures: 36 in.
10. Communications cabling that must cross power cables or conduit shall cross at a 90-degree angle, and shall not make physical contact.
11. Length of each horizontal cable run from the TR to the wall outlet shall not exceed 90 meters.
12. Leave sufficient slack for 90 degree sweeps at all vertical drops.
13. Do not install cable in wet areas, or in proximity to hot water pipes or boilers.
14. Cable ends for termination shall be clean and free from crush marks, cuts, or kinks left from pulling operations.
15. Installed cable jackets shall have no abrasions with exposed conductor insulation or bare copper 'shiners". The installer is responsible to replace damaged cables.
16. Horizontal cables extending from mounted jacks or panels shall maintain a minimum bend radius of at least 4 times the cable diameter.
17. Firestop all cable penetrations through fire-rated barriers per local codes.

PART 15 VERTICAL DISTRIBUTION SYSTEMS

A. Riser Connectivity and Cable General

1. The cabling system shall use a fiber/copper riser cable system between the IDF rooms and the MDF within the building.

2. Copper Voice/Data Riser shall be 25-pair Category 3 plenum Copper Riser Cables Installed between each IDF and the MDF as indicated in the attached riser drawings. These cables are to be terminated onto the 110 termination blocks on the wall-mounted or rack-mounted frames in the IDF Rooms and MDF Room.

3. Fiber Riser shall be 12-strand OM4-Multimode fiber optic cable is to be installed between each IDF and the MDF Room as indicated in the drawings. These cables are to be terminated onto fiber optic patch panels located in the relay racks in each of the IDF rooms and the MDF Room. The 12-strand OM4-Multimode fiber cable is to be connectorized with SC connectors on both ends.

4. A plenum coaxial cable is to be installed from the MDF Head-End Room to the various IDF Rooms within the building. The cable is to be fastened to the wall- mounted plywood backboard in each floor's IDF and MDF Room with 15 feet of slack neatly coiled, tie wrapped, and left dead-ended.

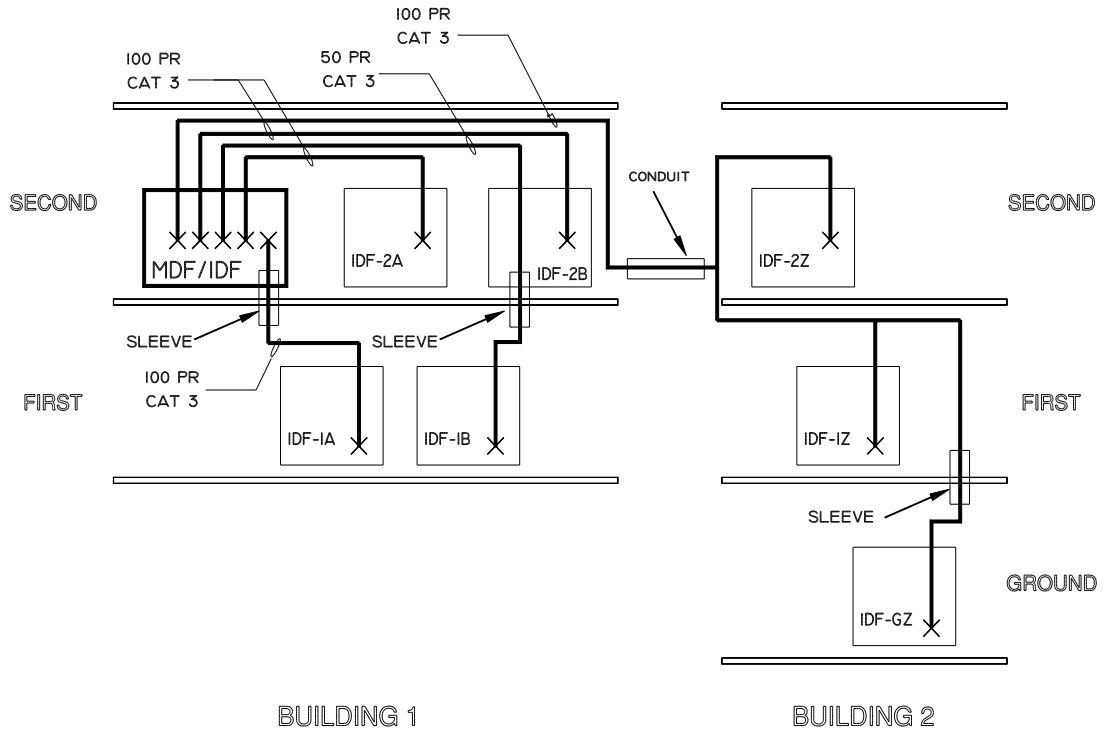

SAMPLE RISER-VOICE CABLING
SCALE: NONE

B. Fiber Backbone Distribution cable: indoor, non-armored

1. Fiber Backbone Distribution cable Requirements

- Optical Fiber Indoor Distribution Cable shall be constructed with 12 optical fibers, each coated with a 900 micron color-coded PVC tight buffer, surrounded by an aramid yarn strength member, and a single outer jacket with the appropriate flame rating.
- Fiber cables shall be a non-metallic construction, OFNP (Plenum FT-6) flame rating.
- Cable markings shall repeat every meter, and shall have at minimum the following information:
  a. Sequential length indicator marking (meters)
  b. Manufacturer's name and catalog number
  c. Lot number, traceable back to the fiber draw lot
  d. Date of Manufacture
  e. Fiber type: (OM4 or Singlemode)
  f. Cable rating (OFNR, OFNP, etc.)
  g. Applicable Telcordia, TIA, IEC, and ICEA standard references and appropriate UL/CSA agency listings
- Cable jacket color shall be Aqua for Laser optimized 50 micron OM4 multimode.
- Buffer position color codes shall conform to standard ICEA and TIA-598 conventions as follows:1-Blue, 2-Orange, 3-Green, 4-Brown, 5-Slate, 6-White, 7-Red, 9-Yellow, 10-Voilet, 12-Aqua.
- Optical fiber in any cable construction shall be enhanced performance, bend-insensitive type.
- Multimode cables shall perform at minimum to the attenuation, bandwidth, and distance application parameters in the table below.

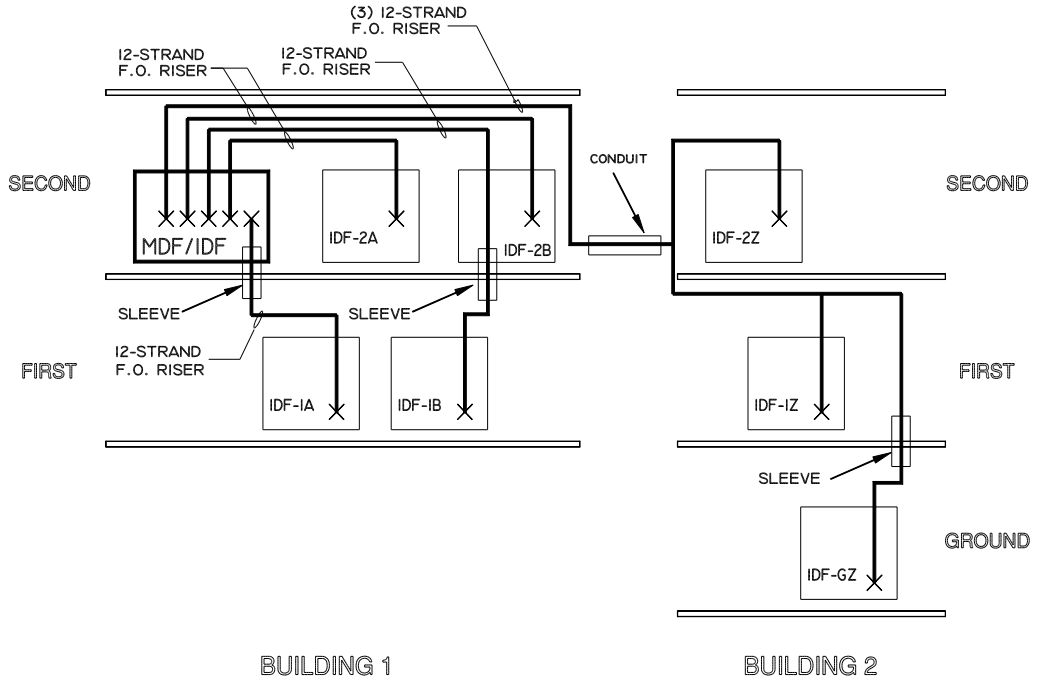

SAMPLE RISER-FIBER OPTIC CABLING
SCALE: NONE

Multimode Fiber Gigabit and 10 Gigabit Ethernet Application Chart					
Fiber Type	**Wavelength (nm)**	**Max Attenuation (dB/km)**	**Bandwidth (MHz•Km)**	**1 GbE Distance (m) @ 850/1300nm**	**10 GbE Distance (m) @ 1300nm**
MM 50 µm (OM4)	**850 / 1300**	**3.0 / 1.0**	**4700 /**	**1100 / 550**	**550**

- Optical fiber cables as supplied shall meet or exceed the applicable IEC 60793-1 qualification test requirements for optical, geometry, mechanical, and environmental parameters as specified, and tested in accordance with TIA/EIA-455.

2. PERFORMANCE REQUIREMENTS

- For installed fiber cables, all fiber strands shall pass insertion loss and return loss in accordance with test methods ANSI/TIA/EIA-526-14 for multimode cables.
- Installed fiber cables shall exceed all currently ratified bandwidth-distance- application performance parameters for IEEE 802.3ae (10 GbE) and for IEEE 802.3ba (40/100 GbE)
- Plenum cables shall be rated UL NFPA-262/UL910/CSA FT-6

3. Acceptable Manufacturers:

- Hubbell Premise Wiring or HCM.
  The Hubbell and HCM products listed in the table below comply with all requirements specified in this document

HUBBELL CATALOG NUMBER	Description
HFC1012P4	Fiber Optic Cable – 12-Strand MM 50 µm (OM4), Plenum, Aqua

HITACHI CATALOG NUMBER	Description
61868-12	Fiber Optic Cable – 12-Strand MM 50 µm (OM4), Plenum, Aqua

- Or approved equal of: Corning, Berk-Tek

4. Fiber Backbone Distribution cable: indoor, non-armored Installation Requirements

- Prior to cable deployment, backbone pathways (conduit, tray, raceway, wire basket, etc.) for cable routing shall be permanently installed in compliance with contract documents, and applicable codes and standards.
- Racks, cabinets or enclosures into which cables are to be routed shall be permanently installed in compliance with contract documents, and applicable codes and standards.
- Optical fiber cables shall be deployed using the proper pulling grip or apparatus attached to the exposed cable strength member. Contact the cable manufacturer regarding permissible methods for cable pulling. Never pull directly on the fiber strands of an optical fiber cable.
- Cables shall not exceed minimum bend radius limits or maximum pulling loads during or after installation. Avoid crushing or abrasion of the cable jacket during installation.
- Installed cables shall be fully supported and strain relieved from pulling on terminated connections. Apply wire ties loosely and avoid crushing or clamping cables with excessive

force.

- All non-armored fiber optic riser cables are to be installed in plenum inner-duct. Fibers in inner-duct or armored plenum riser fiber serving as riser cables are to be installed according to the attached riser drawing. Contractor to size the inner-duct for each cable run. Multiple fiber optic cables can occupy an individual inner-duct when non-armored fiber is not used.

PART 16 CAMPUS CABLING

A. Outside Plant Cabling

1. The contractor is to follow the drawings regarding the installation of outside plant (OSP) cabling to buildings remote from the main building, such as portable rooms, trailers, other small buildings, etc. Many remote buildings can be served by conduits underneath or within ceilings of protected overhangs and bridges.
2. The contractor is to furnish and install outside plant cables and associated protector blocks, splice cases, and grounding where applicable in an approved manner.
3. The contractor will be responsible for obtaining all required right-of-way easements and permits before any excavation on the property begins.
4. All existing facilities in the area of excavation will be located and marked with paint, stakes, or flags before any excavation.
5. Outside plant optical fiber cable shall be 50/125 laser-optimized multimode or Singlemode strands loose-buffer tube water- blocking for outside plant application.
6. Outside plant copper cable will be solid insulated conductors 24 AWG with gel-filled core in 25-, 50-, or 100-pair increments.
7. RG-11 coaxial cable rated for OSP use will be used between buildings. Outside plant cables are to be routed aerially, underground, or buried by designed. Contractor may provide recommendations as to cable routing for approval.
8. Where noted, the contractor is to use aerial plant cabling between buildings. In cases where cables are attached to poles or buildings, aerial spans are not to exceed 100 ft from the last pole to the building, using slack span construction (no guying at either end). EIA/TIA guidelines and NEC code are to be strictly adhered to for separation and clearances from power lines and traffic.
9. Underground Cable is to be enclosed in conduit buried at least 24 inches below ground surface. In situations where fiber optic cables will be used, inner-ducts will be placed inside conduits to ensure physical protection for the cable. Proper fill ratios must be observed as well as proper bend radius. Metal sleeves through the foundation will be used to prevent conduit shearing. Sleeves must extend from inside the foundation wall to a minimum of 12”. The end of the conduit within the building must be securely fastened to withstand the placing of cable. Sleeves are to be sealed with plugs or sealant. Conduit must be bounded and grounded in compliance with EIA/TIA and NEC requirements.

10. Minimum depth of trench should allow for 24 inches of cover from top of cable to final grade. Upon refilling the trench, the soil must be tamped to prevent sunken trench appearance. Conduit sleeves will be used for penetrations through foundation walls, using the same guidelines as for underground cable. OSHA regulations concerning shoring requirements must be followed during all phases of buried cable installation. Contractor must install buried cable so as to meet minimum separation distances from adjacent structures (power, gas, water, etc.) To minimize the chance of accidental dig-up, contractor will install detectable warning tape a minimum 18 inches above cable.

11. Multi-pair protector blocks shall be installed to provide protection from voltage surges and sneak current. The protector panel shall be equipped with 110 wiring block and solid state protector units type 4C, and others depending on the situation. Project Manager will coordinate with contractor. Protector panels shall be installed within 50 feet of each outside plant cable building entry point. Protector panels must be grounded and bounded to the building grounding system.

12. Splice cases shall be provided and installed at both ends of outside plant cables. Splice cases shall be used for cable transition from to inside plant cables.
    - Fiber optic splice cases shall be designed to seal, bind, anchor, and protect cable splices and transition points from outside plant to inside plant cables. The case shall be fully equipped with a suitable splice kit for the fiber quantities specified.
    - Copper splice case shall be designed for use with non-pressurized cable. The case shall be of a durable fire-retardant material, single piece with a hinged cover. The case shall be equipped with a cable entrance end plates assembly of adequate size to accommodate entering and exiting cables, ground straps, and all necessary termination, mounting hardware.

13. Pedestal/Cabinet shall have a heavy gauge galvanized steel housing or equivalent and be weather-resistant for the termination of copper and fiber optic cables. It shall be equipped with ground bar, protector blocks, and adequate space for splice cases to accommodate transition of cables into or out of the cabinet. Pedestal/Cabinet size dependent upon each situation.

14. All OSP cables will be grounded according to EIA/TIA and NEC standards and codes.

15. Contractor is to install a RG-11U Plenum Coaxial cable between the existing CATV Head-End Location and the MDF Room when indicated in the attached drawings. Not all buildings have a CATV Head-End, but if it exists, it will be noted on the attached drawings. These cables are not to be terminated, but must be neatly coiled and tie-wrapped with 40 feet of slack cable remaining at each end.

PART 17 PATCH CABLES

A. Patch cables should meet the minimum performance requirements specified for each system. This requirement specifically prohibits the use of flat, non-twisted (also known as "silver satin") cords for Data or local area network applications. However, "silver satin" patch cables are acceptable for use in telephone systems.

B. The contractor shall provide two Category 6 Patch Cords for each end of each standard outlet for horizontal LAN connectivity. The cords are to be of varying lengths based on the patch panel, electronics equipment, and work area configurations. The quantity and lengths are to be documented and agreed upon, and the owner or Project Manager is to sign for them upon acceptance. These cords are to be stored in the MDF or IDF room for which they are designated.

C. The contractor is to provide dual SC to LC Patch Cords for connectivity for ports or equipment served

by the fiber patch panel. The cords are to be of varying lengths based on the patch panel and electronics equipment configurations. These cords are to be stored in the MDF or IDF room for which they are designated.

D. Fiber Patch Cords

1. Fiber Patch Cord Requirements

- Provide factory-made, dual SC to LC fiber cables in 1-Meter lengths for every fiber cable installed.
- SC Optical fiber patch cords shall be constructed with aramid-reinforced PVC loose-jacket duplex cable, with optical fibers having a 900-micron PVC buffer coating diameter. Optical fiber used in 10 GbE patch cords shall be laser optimized 50 micron OM4-multimode, per ANSI/TIA/EIA-492AAAC, with no substitutes.
- Multimode 50 micron core optical fiber within the patch cord cable shall be graded index type in accordance with ANSI/TIA/EIA-492AAAC, with the following specifications:
  a. Core diameter: 50 +/-3.0 microns
  b. Cladding diameter: 125 +/- 2.0 microns
  c. Core/cladding concentricity: less than 3.0 microns
  d. Core non-circularity: 6% maximum
  e. Proof test: 100 kpsi
  f. Effective modal bandwidth: 5700 MHz•km
  g. Coating diameter: 245 +/-15 microns
  h. Buffer diameter: 900 microns nominal
- Connector terminations on each end of the fiber patch cord shall be heat-cured epoxy type with a machine polish, inspected 100% for polish quality and mated-pair insertion loss.
- Epoxy volume within each connector shall be sufficient to properly surround and strain relieve the fiber and buffer layer at the buffer/fiber transition inside the connector body.
- Optical fiber patch cords shall be supplied in a sealed plastic bag with dust caps installed on each end, with insertion loss test results included.
- Optical fiber patch cords shall be available in standard lengths of 1, 2, 3, and 5 meters.
- Optical fiber patch cords shall be manufactured with industry standard SC or LC connector terminations on each end.
- Factory mounted connectors on each end of the patch cords shall comply with the applicable ANSI/TIA/EIA-604 Intermateability standard.
- Buffered fiber strands within the cable jacket shall be surrounded by aramid (Kevlar) material serving as a strength member.
- The aramid (Kevlar) strength member shall be mechanically secured at each connector to provide tensile strain relief of the optical fiber.
- Additional strain relief of the buffered fiber shall result from crimping the rear of the connector during termination.
- Duplex fiber patch cords shall be a zip-cord cable construction with jacket cross-section dimensions of 3.0 mm X 6.0 mm for SC style.
- Duplex fiber patch cords shall have reverse-pair polarity according to ANSI/TIA/EIA-568-B.3 and TIA/EIA-TSB-125.
- Cable jacket shall be marked with the cable manufacturer, UL Optical Fiber Non-Metallic Riser rating (Type OFNR) designation, lot number, and fiber core/cladding diameter designation.

- Fiber A-B polarity shall be clearly marked on each end of duplex patch cords.
- Optical fiber patch cord jacket color shall be aqua blue, specifically for 50 micron laser optimized multimode fiber cables.
- Fiber patch cord connector materials shall be as follows:
  a. SC Ferrules: zirconium ceramic
  b. SC housings: injection molded thermoplastic
  c. Dust Cap: nylon or PVC
  d. Strain relief boot: UL94-V0 molded PVC
  e. Strain relief boot on all connectors shall be beige.
  f. SC connector outer housing shall be beige.

2. Fiber Patch Cord Performance Requirements

- Multimode 50 micron laser optimized patch cords shall have a maximum mated-pair insertion loss of 0.60 dB per end, with a minimum return loss of –20 dB.
- Fiber patch cords shall exceed 10 Gigabit Ethernet performance requirements of IEEE 802.3 standard.
- Fiber patch cords shall exceed the mechanical reliability requirements for tensile, flex, twist and impact as specified in ANSI/TIA/EIA-568-B.3, Annex 'A'.
- Fiber patch cords shall exceed the environmental reliability requirements for high/low temperature and humidity as specified in ANSI/TIA/EIA-568-B.3, Annex 'A'.

3. Acceptable Manufacturers:

- Hubbell Premise Wiring.
  The Hubbell products listed in the table below comply with all requirements specified in this document

HUBBELL CATALOG NUMBER	Description
DFPCLCSCFyyMM (yy=length-1,2,3,5m)	LC-SC Optical Fiber Patch cords, OM4-MM, Aqua

x = Length. Replace x with standard lengths of 1, 2, 3, 5 meters

- Or approved equal of: Ortronics, Panduit, Systimax, Leviton

E. Category 6 Patch Cords

In new construction projects, the default cabling infrastructure shall be Category 6 unless specified otherwise.

1. Category 6 Patch Cord Requirements

- The contractor shall provide two Category 6 Patch Cords for each end of each standard outlet for horizontal LAN connectivity. The cords are to be of varying lengths based on the patch panel, electronics equipment, and work area configurations. The quantity and lengths are to be documented and agreed upon, and the owner or Project Manager is to sign for them upon acceptance. These cords are to be stored in the MDF or IDF room for which they are designated.
- Category 6 patch cords shall be constructed with a clear polycarbonate plug and boot having vertically staggered, trifurcated contacts, each having 50 micro-inches of gold plating.
- Plug dimensions and function shall comply with FCC 47, Part 68.5.

- Patch cords shall have a snag-less feature, integral to the strain relief boot on each end.
- Patch cords shall be constructed with category 6 patch cable, with 24 AWG 7/32 tinned copper stranded conductors, each insulated with polyethylene, and overall jacket with UL flame-retardant PVC.
- Patch cords shall be manufactured using a T568B wiring format, and shall function suitably for either T568A or T568B wiring schemes.
- Patch cords shall be available in the following colors: black, blue, gray, yellow, orange, red, green, white, and purple. Custom lengths and colors shall be available with a delivery lead-time quotation.
- Standard patch cord lengths shall range from1 ft. to 20 ft.
- Category 6 patch cords shall be backward compatible with existing Category 5 and 5e cabling systems for fit, form, and function.

2. Category 6 Patch Cords

- All transmission performance parameters shall be independently verified by a UL or ETL third party testing organization.
- Category 6 patch cords shall be channel performance balanced with Hubbell category 6 jacks, patch panels, and punch-down blocks.
- Category 6 patch cords shall meet or exceed Category 6 component transmission requirements for connecting hardware, as specified in ANSI/TIA/EIA-568-B.2-1 standard.
- The manufacturer shall provide Category 6 component compliance certificates from third party testing organization upon request.
- Patch cords shall be cUL and UL LISTED 1863.
- Patch cords shall exceed IEEE 802.3 DTE Power specification to 4 times the rated current limits with no degradation of performance or materials.
- Patch cords shall be third party verified, error-free Gigabit Ethernet performance to IEEE 802.3 standard.
- Jacks shall exceed 4 Gb/s data transmission capacity within the bandwidth of 1 – 250 MHz when configured in a 4-connector channel.
- Category 6 patch cords shall meet or exceed the 4-connector channel transmission performance requirements of Category 6, per ANSI/TIA/EIA-568-B.2-1 standard.
- The 4-connector channel test configuration shall utilize Category 6 patch panels, blocks, and jacks,

3. Acceptable Manufacturers:

- Hubbell Premise Wiring.
  The Hubbell products listed in the table below comply with all requirements specified in this document

HUBBELL CATALOG NUMBER	Description
HC6xx01	Category 6 Patch Cord, 1FT
HC6xx03	Category 6 Patch Cord, 3FT
HC6xx05	Category 6 Patch Cord, 5FT
HC6xx07	Category 6 Patch Cord, 7FT
HC6xx010	Category 6 Patch Cord, 10FT
HC6xx15	Category 6 Patch Cord, 15FT

HC6xx20	Category 6 Patch Cord, 20FT
HC6xx25	Category 6 Patch Cord, 25FT

xx = Cable Color. Replace xx with "W" for White, "BK" for Black, "B" for Blue, "GY" for Gray, "GN" for Green, "P" for Purple, "OR" for Orange, "R" for Red, "Y" for Yellow. Refer to project drawing for color applications.

- Or approved equal of: Ortronics, Panduit, Systimax, Leviton

PART 18 FIRE STOP - PENETRATION SEALANT

A. Provide fire-resistant silicone foam fill to restore fire ratings to all wall, floor, or ceiling penetrations. Foam must be UL classified and meet NEC and local code.

B. All penetrations through fire-rated floors and walls shall be sealed to prevent the passage of smoke, fire, toxic gas, or water. The fire rating of the penetration seal shall be at least that of the floor or wall into which it is installed, so that the original fire rating of the floor or wall is maintained as required by Article 300-21 of the National Electric Code.

C. No flammable material may be used to line the chase of the hole in which the fire stop material is to be installed.

D. When damming materials are to be left in place after the seal is complete, then all such materials shall be non-flammable.

E. The sealant shall be poured into the hole after each cable has been spread to allow a minimum of ½" of foam to flow between them. No cables may be touching each other, because contact between cables could allow voids to form in the fire stop.

F. If plastic cartridges are used for smaller installations, the chemical components of the foam shall be pre-measured within the cartridges to ensure the proper ratios.

G. The sealant shall remain resilient and pliable to allow for the removal and/or addition of cable without the necessity of drilling holes. It shall adhere to itself perfectly to allow any and all repairs to be made with the same material. It shall allow for vibration, expansion, and/or contraction of anything passing through the penetration without affecting the seal, or cracking, crumbling, and spalling.

H. When sealant is injected into a penetration, the foam shall expand to surround all the items within the penetration at that time and be fire resistant, maintaining the pass-minute rating.. No heat shall be required to further expand the foam to block the passage of fire and smoke or water.

I. The foam sealant material shall have been subjected to fire exposure testing in accordance with standard time-temperature curve in the Standard, UL, ASTM E

J. 119, and NJPA 251. The foam fire-stop material shall also have been subjected to the hose stream test in accordance with UL 10B.

PART 19 TESTING

A. General Test Procedures

1. Before an application for final acceptance of the work will be considered, all tests stated within this section shall be satisfactorily completed. The communications work shall include miscellaneous tasks, (e.g., removal of panel trims, junction, and pull box covers) deemed necessary to demonstrate compliance with the requirements of the Communications specifications, as well as cable and equipment manufacturers' recommended installation procedures.

2. Upon completion of testing and problem resolution, all connections must be 100% error free: "Error

free" is defined to mean the item meets all the manufacturers' specifications and recommendations as published in their latest manufacturing manuals for proper installation and testing. In addition, each item must conform with all other related industrial practices and standards, Building Trades, and Electrical and Communications Industry Standards and Practices.

3. Upon successful completion of each item of testing, the Contractor shall issue in writing a certificate of compliance, along with the test results, to the Project Manager. All failed CAT-5e & 6 – 6a cables and/or Fiber strands shall be clearly labeled and identified as defective, with the type of defect (i.e. open ring side, grounded tip, short, excessive loss, etc.) identified.

4. The Contractor will attempt to remedy any defective copper cable pair or Fiber cable strand and specify in the documentation the location of the problem as identified during the testing procedures. The Fiber trouble location and identification must be completed with an OTDR.

B. Copper Cable Test Procedures

1. Contractor must complete cable system performance verifications on all copper and fiber cable as specified below and provide the test results to the owner or project manager. Category 5e & 6 – 6a cable must meet or exceed all manufacturer's and EIA/TIA standards for performance and installation. Fiber cable must also meet or exceed all manufacturer's and EIA/TIA standards for performance and installation.

2. All copper and fiber optic testing documentation is to be submitted on a CD, as well as 8.5" x 11" hard copies.

3. At a minimum, in addition to any other required testing, the Contractor shall conduct and report on the following tests of copper cabling after the installation is complete:

   - MDF-to-IDF tests of all new riser pairs installed under this contract, to determine continuity, shorts, crossed pairs, correct pinning, and grounds.
   - IDF (110 frame or patch panels)–to-information outlet tests of all new cable pairs installed under this contract, to determine continuity, shorts, crossed pairs, correct pinning, and grounds.
   - The coaxial cable is to be tested from the MDF Room to the IDF Room and from the IDF Room to the coax outlet. Contractor is to test for continuity, shorts, and grounds.
   - The horizontal Category 5e & 6 – 6a cabling, installed from the IDF Room to the Information Outlet at the workstation, is to be manufacturer certified and warranted for Category 5e or 6 – 6a compliance. All manufacturers' performance certificates and extended warranties are to be provided to the owner or project manager upon completion of the testing and manufacturer certification. Contractor is to present copies of certificates identifying the contractor as a current certified VAR for the selected cabling system and therefore, qualified to install a certified cable plant.
   - All category 5e & 6 – 6a cabling is to be tested end–to-end and documented for Category 5e & 6 – 6a compliance at all frequencies up to and including 100MHz for 5e and 500 for 6 – 6a. Such testing is to comply with the procedures and standards outlined by the cable manufacturer and EIA/TIA TSB - 67 concerning testing of Category 5e & 6 – 6a cable plant.
   - A certified Cat 5e & 6 –6a testing system is to be used for such testing to insure that cable pairs are defect free. "Defect free" for the copper cable is defined as a copper pair not having any pair reversals, split pairs, shorts or opens. Test results shall be provided to the Owner or Project Manager within 2 days after testing or 5 days prior to the Owner connecting electronic equipment onto the cable network, whichever is sooner. The contractor must also provide

testing summary reports of all category 5e & 6 – 6a cables including run numbers, and pass/fail results with respect to length, impedance, DC resistance, mutual capacitance, attenuation, NEXT loss, and active ACR. The contractor must also provide spreadsheet analysis of the linearly dependent parameters of length, DC resistance, mutual capacitance, and attenuation; the field measured values shall be compared to the specifications values on one spreadsheet.

- In the event that a CAT-5e or 6 – 6a cable fails to perform to the manufacturer's specifications, the Contractor will, at the owner's request, remove the cable and replace it with a new cable, replacing the defective cable at no additional expense to the owner.
- End-to-end testing is required for every RJ-45 connection. An owner's representative may accompany the Contractor's staff to witness the end-to-end testing. End-to-end testing is defined herein as testing all cabling links to the very last termination point. The Contractor is required to supply sufficient quantities of two-way radios and test equipment to ensure that the tests are completed accurately and expeditiously.
- The Owner, DTI, or Project manager may conduct performance tests of transport electronics connected to the cabling system. Successful equipment performance tests do not relieve the Contractor from the specified testing, repair, and documentation requirements.
- The Contractor shall provide to the Owner or Project Manager with copies of all copper-cable test results.

C. Fiber Optic Cable Test Procedures

1. All fiber optic cable and associated equipment lateral, and vertical riser cabling must be thoroughly tested. The fiber cable will be accepted only after each strand is tested in accordance with the specifications defined herein. All strands are to be tested and found to be 100% acceptable.

2. The Contractor shall test all cables, connectors, associated equipment, and hardware furnished by the Contractor upon receipt of same as defined herein.

3. As a minimum, the Contractor shall test, as described below, all optical fiber cable strands installed within the scope of this proposal:

   - Fully test complete links only. Piecemeal testing is not acceptable.
   - Perform end-to-end, bi-directional attenuation (loss) test for each fiber strand at 850nm and 1300nm wavelengths. Conduct tests in accordance with EIA/TIA-526-14, Method B and with test instrument manufacturer's published instructions.
     a. Demonstrate that measured link loss does not exceed the expected value based on the number of mated connector pairs, the connector's published loss per mated pair, and the cable's published loss based on distance.
     b. Strands whose measured attenuation falls outside the acceptable range shall be subject to further inspection and testing to determine the nature of the fault. At a minimum, an OTDR shall be used to: determine the true loss for each connector pair and the exact length of the fiber, and to identify the presence of any core damage.
     c. Riser end-to-end testing of individual optical fibers is considered to be from the MDF Room to the IDF Rooms distribution panels on each floor.
     d. Horizontal end-to-end testing of individual optical fibers is considered to be from each floor's IDF Room's Fiber Distribution Panels to the Information Outlet.
   - Faults related to connectors shall be corrected and the fiber re-tested as stated above until acceptable attenuation measurements are received.

- Where defects are found to be inherent in the fiber itself, notify the Project Manager in writing. Upon obtaining approval by the Project Manager, replace any cable having fewer than the manufacturer's guaranteed number of serviceable fibers.
- Remove all newly installed defective cables from pathways. Do not abandon cables in place.
- All test results and corrective procedures are to be documented and submitted as a spreadsheet to State/DTI within five (5) working days of test completion.
- Considering that the fiber cable plant is to be certified, each test report form shall provide at least the following information:
  a. Project name
  b. Contractor's name
  c. Date(s) of preparation and of testing
  d. Fiber type, strand count, connectors and patches
  e. Designated cable number (regardless of whether only one cable of each type is present) and individual fiber numbers
  f. Make, model, serial number, and date of last calibration of test equipment used
  g. Name of test crew foreman
  h. Test results: Calculated maximum link loss, length of run, OTDR, and also
  i. Power Meter-measured link loss for each fiber, pass/fail result, and comments.
- In addition to the tests specified above, the Contractor shall be present while the Owner or Project Manager conducts performance tests of the transport electronics connected to the cabling system; the contractor shall conduct on- the-spot cable tests and effect cable plant repairs as necessary. Successful equipment performance tests do not relieve the Contractor from the specified testing, repair, and documentation requirements.

- Recommended test equipment:
  a. Optical fiber power meter and Light Source: Siecor CPM-850/1300 meter and OS-100D Light Source, or equivalent.
  b. TDR: Tektronix TFP2 FiberMaster, Laser Precision TD-2000 or equivalent with 850nm and 1300nm emitter modules and hard copy printout, or equivalent.
  c. Optical fiber inspection scope: Cambridge Instruments 10x fiber scope, or equivalent.

- The Contractor shall provide copies of all fiber and copper cable test results to the Owner or Project Manager.

- All fiber optic cabling (workstation and riser) is to be installed in a manner that complies with and allows Owner to receive the manufacturer’s extended warranty. The contractor is to be certified and authorized to provide the extended warranty. A manufacturer's extended warranty is to be provided, through the contractor, upon completion of the testing and manufacturer’s certification. Contractor is to present copies of certificates identifying the contractor as a current certified VAR and therefore, qualified to certify and install the cable plant.

- The Owner and Project Manager reserves the right to observe any or all portions of the testing. Notification of testing is at least three days prior to start of testing.

D. Replacement

Any fiber strand, connector, block, or module installed by the Contractor that fails to meet the loss budget, or that tests below the manufacturer's standards, shall be replaced at no additional cost to the owners or State/DTI. The replacement cable, connector, or part shall be tested after repairs have been made to verify compliance. Only equipment that meets

the installation requirements stated herein shall meet the system's acceptance requirements.

E. Source Manufacturing/Quality Control

Cables that are supplied by the Contractor, and test outside of the factory test data by a margin of 10 percent on loss, may be deemed non-usable and returned to the manufacturer for replacement.

F. Physical Inspection

Prior to conducting any transmission testing, the following visual inspections will be performed:

1. Verify that all cable has been installed in full compliance with the proposal specifications.
2. Check for physical damage to the Fiber Distribution Panels and termination hardware.
3. Check that all cabling is properly jacketed, installation properly labeled at both ends of the cable, inner-duct and termination hardware is completed in all IDFs and the MDF Room.
4. Verify that all cable bends are within the manufacturer's specified bend radius.
5. Verify that all cabinets and racks (which require grounding) are properly grounded and comply with the National and Local Electrical Codes and State Standards for grounding.
6. Verify that the cables are properly approved and structurally supported for termination.
7. Verify that all Delaware Fire Code requirements have been met and satisfied.

G. DOCUMENTATION

Proper labeling and documentation will allow a technician to quickly trace a particular cable link and will significantly reduce the time and costs of moves, additions, changes, and troubleshooting. Both labeling and documentation depend on the use of a system-wide coding scheme that will identify and locate each component of the wiring system and allow all components to be linked in a logical fashion.

There are three components of wiring system documentation:

1. Labeling Communications/Data room/closet termination areas aids in identifying the source and function of a circuit.
2. A labeling scheme simplifies the documentation process.
3. "As built" documents provide a permanent record of the communications infrastructure. These documents are a critical management resource. As a result, it is imperative that "as built" documentation be prepared as part of the communications infrastructure project. In addition, these documents must be kept current throughout the system's life cycle.

H. Termination Blocks

Labels on the connecting hardware should be coded based on the function of the terminated wiring. Colored designation strips are typically provided with a termination block.

I. Cable and Information Outlet Identification

The Contractor shall furnish and install cable tags labeled with identifying cable numbers mutually agreed upon with contractor and the Owner or Project Manager.

1. The Contractor shall clearly and consistently mark the appropriate designation strip labels on all termination hardware mutually agreed upon with the Owner or Project Manager. Contractor will submit a sample of all designation labels for approval before installation.
2. The Contractor shall affix outlet identification labels, machine printed or typed, with identifying cable numbers as shown on the attached drawings.
3. Subsequent to pulling and terminating cables, the Contractor shall place the appropriate cable tags within six (6) inches of each end of each copper cable and eighteen (18) inches of each optical fiber cable end.
4. If the cable tape becomes illegible or is removed at any time during the job, the
5. Contractor shall immediately replace it with a duplicate preprinted cable tag.
6. The Contractor shall provide the Owner or Project Manager with a listing of all cable identification numbers, keyed to cable types.
7. Contractor will label each information outlet with the following labeling scheme: If the 1st floor IDF closet "A" is the origination point of the cable feeding workstation "007" the following is the configuration of the label to be installed:

   Floor- IDF Closet - Information Outlet Number
   Example: 1A-007

8. Contractor will submit for approval a sample of all information outlet designation labels.

J. "As-Built" Documentation

Maintaining records and documents is the most important portion of the administration of a communications infrastructure. Maintenance and moves, additions, and changes can become very difficult if a current set of records and documents is not maintained. In fact, isolation and resolution of problems are often delayed because configuration information is either unavailable or outdated.

Subsequent to the installation and prior to acceptance, the Contractor shall prepare and issue As-Built drawings, in an AutoCAD format, that shall reflect the lengths of cables installed and the actual manner and conditions of installation, including all deletions from, additions to, or departures from the contract documents. These documents are to include the information outlet station numbers and cable routing where they vary from the original plan. A copy of these documents will be stored in the MDF, with a master copy located at the Owner or Project Manager.

K. Cable Management System

Wiring and equipment relationships must be maintained in a database or spreadsheet (depending on their complexity). The best approach is to use a third- party vendor's application for tracking cable management. These records contain comprehensive information about the users' communications configuration. The information will be very valuable in the support of long-term user-community communications requirements.

PART 20 APPENDIX A – COMMUNICATIONS PLANNING CHECKLIST

A. Space allocation for Communications/Data room/closets

1. **Based on a number of factors, including the:**
   - Type of equipment to be installed
   - Size of the phone and data termination backboards
   - Access to floor cores and conduits
   - Cable tray requirements
   - Location, size, and swing of the Communications/Data room/closet door(s)
2. Square footage is not as important as the actual floor dimensions and the placement of the equipment. It is possible to design around some obstacles and still have a functional facility. For instance, an oblong room is not as desirable as a square room having the same square footage.
3. The criteria for establishing the size of a Communications/Data room/closet and determining whether or not it is functionally acceptable are complex. Answering the following questions is the first step in determining the long-term feasibility of a communications room or closet:
   - What will be the closet's primary function: phone, data, or combined services?
   - Where is it located in proximity to serviced workstations, network rooms, and other Communications/Data rooms/closets?
   - What type of equipment is going to be in the room/closet?
   - Is it wall- and/or rack-mounted?
   - How much equipment will be put in the room/closet? What are the dimensions of those devices?
   - What are their environment requirements?
   - Based on the type(s) of equipment going into the room/closet, what is the installation, maintenance, and operator work space required around the equipment?
   - Can the equipment be attached securely to the structure?
   - What cable types are being used? What are the cable separation requirements? Where are the cables terminated within the closet?
   - Does equipment mounted in the closet require an open space? Is there any other device needing clear space?
   - Is the room/closet securable? Do other entities need access to the space? What are their space requirements?
   - What size is the door? Does it swing in or out? Can the door be modified?
   - Is power available? Can it support the room/closet electrical requirements? Can it be modified?
   - Does the room need air conditioning? Does it ventilate well? Can it be modified?
   - Where are the floor cores and the ceiling access points for conduits?
   - Are there expansion requirements? Can the expansion requirements be accommodated by the room/closet size? Can the closed be enlarged at a later date?

PART 21 APPENDIX B - CABLE INSTALLATION CHECKLIST

A. Check Local Building Codes

The requirements stipulated by Section 800 of the National Electrical Code for Communications cable installations produce an orderly installation. However, it is important to consult your building inspector to determine whether there are special local requirements. Strapping requirements depend upon the building's design, State and Local Standards, and codes. Terminations can be made in standard junction boxes.

B. Coordinate with Other Contractors

Plan to install the cabling system in new buildings after the power wiring, air- handling ducts, and ceiling supports have been installed, but before the ceiling tiles are in place. This will prevent damage to the cable system during construction.

C. Plan the Job

On a blueprint, mark all terminations and desired routings, if known, to accommodate future building modifications.

D. Label the Cables

Label each cable reel and its free end according to the termination locations marked on your blueprint.

E. Pull Cable into Place

Deliver the cable from the bottom of each reel, making sure not to kink, crush, or pinch the cable. Pull groups of cables to a logical point and then fan out to the individual termination points. Arrange the cables neatly so they are easily identifiable for relocation. Separate the Communications cables from other cables by at least six inches and avoid sharp edges, tight bends, and locations that would subject the cable to abrasion, corrosion, or moisture. According to the National Electrical Code, low-voltage cables cannot share a tray with power cables. Running signal cables close to power cables may also cause hum pickup. If in doubt about cable locations, consult the standards or the Owner.

F. Remove Slack

Remove slack in lines by pulling the cables back to the wiring room and by adjusting their ceiling location as needed.

G. Label and Cut

Label each cable and then cut it off, making sure to leave enough cable to reach the termination panel.

H. Tie Cables Together

Use cable ties to bundle and secure parallel runs together. Place the ties at intervals sufficient to prevent sagging and to maintain neatness. Distances between ties may vary from six inches to four feet, depending on the size of the cables.

I. Strap the Cable

Use straps to fasten the tied cable bundles to hangers at 4-foot or other appropriate intervals. The distance between hangers will vary from 3 to 20 feet, depending upon the strapping surface, the type and number of cables in each bundle, State and Local Standards, and codes. Make sure to support the cables with hangers rather than pipes, conduit, or other structures in the building plenum. If space permits, use existing hangers; otherwise, install new ones. Do not use straps that are too small for the cable diameter because they can cut or pinch the cable insulation.

J. Inspect the Job

Be sure that the cables are not resting on false ceilings or near electrical fixtures or sagging more than three inches from the point of the tie wrap.

PART 22 APPENDIX C - QUALITY ASSURANCE

A. All materials used shall bear the Underwriters' Laboratory, Inc. label, provided a standard has been established for the material in question.
B. All products and materials shall be new and unused, clean, and free of defects, damage, and corrosion.

PART 23 APPENDIX D - CODES, REGULATIONS AND STANDARDS

A. All installations and equipment shall be in compliance with, equal to or exceed the minimum requirements of OSHA, NEC, NEMA, IEEE, SAME, ANSI, UL, EIA, TIA recommendations and the rules, regulations and requirements of the Federal Communications Commission.
B. The installation shall comply fully with all applicable Local, County and State of
C. Delaware laws and ordinances, regulations, and codes.
D. Local electrical and building codes in Delaware may be more restrictive than national codes, recommendations or practice. Follow the most restrictive code or recommendations.
E. Should any change in plans or Specifications be required to comply with governmental regulations, the Contractor shall notify the Owner or Project Manager at the time of submitting the construction schedule.

PART 24 APPENDIX E - WARRANTY

Besides the manufacturer's extended warranty the Contractor shall submit a single Guarantee stating that all portions of the work are in accordance with Contract requirements and guaranteeing all work against faulty and improper material and workmanship, including work and materials of all subcontractors, manufacturers, suppliers, and sub trade specialists, for a period of one (1) year from date of final acceptance by the project manager, State/DTI, and Owner. Where guarantees or warranties for longer terms are provided, such longer terms shall apply. Within 24 hours after notification, the Contractor shall correct any deficiencies that occur during the guarantee period at no additional cost to Owner, all to the satisfaction of the Project Manager and or Owner.

When installed by a Certified Installer and used in a Structured Cable System, the manufacturer's extended warranty shall cover the installation for a period of 5 years against defects in material and workmanship. It shall also guarantee that it will support any current and future applications designed for Data transmission over the 100/500MHz link/channel, as defined in TIA/EIA 568A Communications Standard.

All move, add and change (MAC) activity shall be covered by the warranty provided it is performed by a Certified Installer.

PART 25 APPENDIX F - BID/QUOTE RESPONSE FORMAT

A. Proposal identification number or control number. This number will be used as a reference for this individual proposal and will facilitate coordinating multiple bids or quotes for the same location or job site.

B. Requesting State Agency and Contact name, phone number and address. This should be the name of the State agency requesting the quote or bid and that agency's contact person's phone number(s) and address.

C. Building or office location address. This address should be the actual location of the job site. This address should include the floor numbers, if more than one story, and building numbers or names, if more than one building is involved.

D. Total Cost of Bid/Proposal. This dollar amount should include the total material and labor cost. The material and labor cost should be stated separately and then totaled. Also state whether or not labor costs are based on prevailing wage standards or not.

Example:

Material	$3,500.00
Labor Prevailing	$2,750.00
Total	**$6,250.00**

E. Scope of Work. This section should be a written description of the work to be performed. It should be function-specific.

Example:

- Install, terminate both ends, test, and label XX work area locations consisting of one Voice and two Data CAT5e cables and CAT5e 568-B RJ45 jacks.
- Install one Voice cable from the Communications Closet to the Fir/Security Alarm Panel location.
- Using new conduit placed by others, provide and install a 100-pair Category 3 outside plant cable and a 12-strand Multimode Fiber Optic cable in inner-duct from the building communications closet to the boiler room of the main building.
- Provide and install lighting protection at each end of the 100-pair outside plant cable.
- Provide and install a 100-pair plenum-rated riser cable from the boiler room to the main communications closet and terminate on 110 type wall mount hardware.
- Terminate the six-strand Multimode Fiber Optic cable in SC type connectors.
- Provide and install 7’ relay racks and CAT5e patch panels.

F. Material

The material should be and itemized list with manufacturer's name and part numbers, including all piece parts and quantity of each. Total man hours to complete the job should be included as an item in the list.

Hitachi Cable	Blue	30025-8BL	2,800 ft
Hitachi Cable	White	30025-8WH	2,000 ft
Hubbell Jack Single		609501108	14 ea
Hubbell Jack Double		60950096	14 ea
Hubbell 110 block		30200007	1 ea
Hubbell Panel P6E48U		951044344	1 ea
CIRCA protector panel		1880ECAS1-100G	2 ea
1 pair fuse CIRCA		4B1E	200 ea
etc.			
etc.			
etc.			
Labor Man Hours			72 hr

G. Warranty

This should include the name of the manufacturer from which the State will receive the warranty and the type and length of the warranty or warranties provided with the cabling solution that is proposed

PART 26 APPENDIX G – OUTSIDE PLANT – DELDOT SPECIFIC REQUIREMENTS – TRAFFIC CONSTRUCTION

A. DELDOT FIBER INSTALLATION OVERVIEW

- Varied Distances
  - 200 ft -65km
- Locations
  - Highways/Roadway
  - Buried conduit
  - Pole Line
- Typical installation methodology & work to include
  - Backhoe work
  - Trenching/directional boring
  - conduit
  - hand holes
  - Vaults
- DelDot Mandated Safety standards
  - OSHA – Occupational Safety & Health Administration
  - All Delaware road work safety requirements shall be in accordance with the DelDOT Manual on Uniform Traffic Control Devices (MUTCD) for Streets and Highways – Part 6 Temporary Traffic Control.
- DelDot Project Initiation Timeframes
  - Safety is priority one for all DelDOT projects – no road work will not be authorized without following the proper safety precautions and DelDOT safety approval. It some situations, DelDOT requires 2 week notice prior allowing road work to begin.

B. Deldot Singlemode Fiber Specifications & Purchasing requirements

- All fiber and splicing work must meet/exceed specification of Standards Bodies:
  - ANSI -American National Standard Institute
  - EIA/TIA -Electronic Industries Associations/Telecommunications Industry Association
    - Structured cabling systems for commercial buildings
  - NECA - National Electrical Contractors Association
  - BICSI – Building Industry Consulting Services Internation
  - State of Delaware and Local standards & code
  - ANSI TIA/EIA 758 (latest reference) Outside Plant Customer Owned Telecommunications Standard

- Fiber Cable Certification
  - Vendors must provide documentation, on a per job basis, written certification that all cables and services supplied as a result of this solicitation meet all current applicable ANSI EIA/TIA specifications and BICSI Guidelines
  - Testing methodology per section “Deldot Fiber Testing Requirements”
  - In order to adhere to warranty specifications and to standardize on cable specifications, the Delaware Department of Transportation has standardized on Corning fiber optic cable, which requires installation by a Corning EWP (Extended Warranty Program) Partnering Company.

C. DelDot Fiber Testing Procedure and Minimum Accepted results

- Single Mode Fiber
  - Maximum Bend Radius
    - Conductive cable - 15 times the cable’s outside diameter when being pulled
    - Nonconductive cable – 10 times the cable’s outside diameter when under no

load and 20 times the outside diameter when being pulled
- Fiber Connector Type
  - SC connectors – DOT standard is SC only
- OTDR Testing & Results
  - Anritsu –CMA 5000 or equivalent
  - Power meter – Corning OTS 600 Series Power Meter & Light Source or Equivalent
  - Maximum Loss
    - Optical fiber attenuation factor 1.5 dB/km standard limit, (e.g., TIA-568-C.3)
    - Connector Coupling loss .75 dB/pair standard limit, (e.g., TIA-568-C.3)
    - Fiber splice insertion loss .03 dB standard limit (e.g., TIA-568-C.3)
  - Utilize an optical fiber link transmission performance calculation worksheet to determine acceptable loss within specified run
- Splicing Requirements
  - Fusion splice according to the manufacturer's instructions.
  - Secured by a splice closure containing splice trays in groups of 12 or 24 fiber
  - DelDOT has standardized on the 3M Brand splice cases.

- Termination
  - Rack mounted enclosures are primary in the fiber hub and facilities and mounted on 19 Inch Racks
  - Pre-terminated Zuse Panel from Corning or equivalent are used for device termination
  - Wall mounted enclosures with Rack mounted patch panels are used only when specified by the Fiber Committee.
  - DelDOT has standardized on Corning components for patch panels, enclosures and all related equipment
  - Factory terminated duplex jumpers comply with optical fiber performance specifications of applicable standards (i.e., ANSI/TIA-568-C.3)
- Administration
  - Adherence to the Outside Plant Fiber Optic Naming Convention provided by DelDOT Document available upon request.
  - Deliverables – this document is attached, please reference ####.

D. Outside Plant Pathway

- Construction Of Outside Plant Pathway
  - Shall be in accordance with ANSI TIA/EIA 758 (latest reference) and BICSI Outside Plant-Customer Owned Manual and Telecommunication Distribution Methods Manual.
  - Maintenance Hole (Manhole) access – OSHA trained Confined space training
  - The department requirements contact to One Call before any digging.

- Inner duct
  - Qty 4 – 1" corrugated inner duct is required within 4" PVC or HDPE conduit with a pull cords and 12 gauge solid tracer wire
  - All inner ducts will be sealed with rubber inner duct plugs

- Conduits
  - All Conduit installed unless otherwise designated is 4 inch
  - Inside buildings, cabinets, Hubs, Telephone pole, Signal Poles or Maintenance holes and hand holes, end of conduits are to be sealed with rubber conduit plugs, water plug or duct sealer.

E. Product Substitution

- All items or services delivered during the life of the contract shall be of the same type and manufacture as specified or accepted as part of the states contract.
- The Dept. of Transportation can change specification or vendors of equipment as a benefit to the state.
- Vendors are encouraged to offer any like substitute product (s), either generic or brand name for evaluation especially if an opportunity for cost savings to the state exists. The state requires the submissions in writing with specifications and/or product samples for evaluation prior to any approvals being granted.

F. Highway Safety

- Safety is priority one for all DelDOT projects – no road work will not be authorized without following the proper safety precautions and DelDOT safety approval. It some situations, DelDOT require 2 week notice prior allowing road work to begin.

Deliverables and long term administration of the Fiber Optic Program for Delaware Department of Transportation

The department of Transportation uses federal funds to provide most of the fiber requirements throughout the state of Delaware. Because the FHWA has more stringent requirements about the use of federal funds, the Department of Transportation Fiber Committee has put together a tasking and processing method that covers the requirements of federal reporting, Federal Audits as well as state audits. These additional deliverables are added to the cost of implementation and are covered as a line item in the proposals.

Fiber Tasks for the Department of Transportation

- The process for fiber implementation starts with the design phase and can take years to implement or even get funded. Starting at the design level, the department's fiber committee helps to insure that all the designs cover the fiber requirements as they pertain to the department's overall strategic plan. It also considers ease of repair, ease of redirection and cost.

- The fiber contractor is responsible for providing quotes for specific requirements as determined by the department's fiber committee and the engineering department. The requests come in a formal packet that has a logical design, the footages and parts to be used for the implementation. The fiber contractor produces a quote in the format dictated by the department which includes a narrative of the request and a spreadsheet break out of the components to be used - to include all parts being used and the labor it will take to produce this final product. Examples may be requested if necessary.

- Once the Quote is received it is processed with the department's final design and then awaits funding. In some instances this may be weeks. In some instances this funding may never occur.

Fiber Contractors Role

- The contract as stated above will provide the department with quotes for specific tasks. When given a Notice to Proceed from the Departments Fiber Committee the task is deemed funded and the work will be schedule as described in the sections above.

- There are several different scenarios that drive the department's fiber program and requires flexibility on the Fiber contractors part. Some of these issues are discussed below in more detail. The use of sub-contracts, the need for minor underground construction, tasks that encompass a fair amount of safety requirements due to the location of the sites that are being worked. I.E. I95, SR1 and bridge

work. As a rule most conduits and underground will be in place when the task is requested. There are times when that is not the case and underground construction will be required. Most of the time we are working outside but occasionally we will need to terminate and facilitate indoor facilities throughout the state.

Emergency Requirement

- Daytime call out is a common emergency where the fiber optic in the state has been impacted or severed by construction from the department or from a third party. There are times when it is considered an emergency when the fiber that was close to a project is not impacted, but discovered that it needs to be pulled out of the way and then re-instated. These types of call-outs are less frequent but not uncommon.

- Night Time and weekend call outs usually happen for some of the same reason, and can include weather events that cut the fiber or a tree falling, etc.. There are a few scenarios where this type of call-out is necessary.

- The fiber contractor must be able to be in contact with the representative from the state within a two hour time frame, 24 hours a day, seven days a week. The department also expects the contractor to be on site with their equipment, in four hours.

Deliverables

Logical Drawing vs. As Built. As a deliverable of a finalized task, the department requires what we call a logical. These are in Visio format and are incorporated into the master documentation of the departments overall fiber documentation. These are not to scale, but do require more detail from a fiber perspective than an as-built. As-builts, we consider to be markups of the original designs with field notes that show any deviation from the original task/ proposal. We do not require a formal as-built but we are not always able to inspect every aspect of the task. If the fiber contractor discovers that the field work deviates from the design, this should be reflected in the field notes, and if easier to explain, in a drawing or a markup of the logical or the as-built .
Note: Incorporation of Logical Drawings – The department's fiber committee will review the logical, provide the quality control function, ask for more detail or clarification if needed, and incorporate the final product into the corridor of the state road information system.

- GPS information – is required from the fiber vendor. This information should be provided to the department in an .mdb format, and include all information as it pertains to the conduit, the fiber, the compass direction, the wells, and intelligent devices. The department will provide the data dictionary for the collection of this information.

The department uses Trimble handhelds for the collection of the data in conjunction with Pathfinder and TerraSync software by Tremble. Both the GPS unit and the software necessary to use it, including the pathfinder licenses and TerraSync licenses, are the responsibility of the contractor.

- ODTR information is provided to the state in the deliverable package and will be reviewed during the quality control process. Failures of fiber strands, for any reason, in the field are unacceptable unless otherwise directed by the fiber committee.

- Power Meter Data is provided to the state in the deliverable package and will be reviewed during the quality control process. Failures of fiber strands, for any reason, in the field are unacceptable unless otherwise directed by the fiber committee.

- Packing Slips – all equipment bought for a specific task will have packing slips. The department is required to collect and store copies of these slips for the purpose of audit. Any deliverables packages that do not contain all of the deliverable elements will be rejected.

- Warranty Information – all warranty information as it pertains to the purchases of equipment for a specific task will be provided to the state in this deliverable package. This is to include the Corning

Cabling System, 25 Year guarantee for all projects.

- Field Notes and Drawings will be digitized/ scanned and provided in the deliverable package.
- Final inspection – although this is not a physical deliverable, no deliverable package will be considered for payment or quality review until a final walk through has taken place.

Deliverable Review

- Fiber Committee Review – all deliverables go through the fiber committee for final review and quality control.
- If there are any omissions or information needs to be clarified or re-surveyed, the committee will provide the vendor with the request and the payment/ invoice will be put on hold until the requested information is re-submitted.
- Once the new information has been received the fiber committee will review the information and process payment if all deliverables meet the department's requirements.

Final Documentation Submission

Media
- Directory Structure – all deliverables will be provided to the state in a directory structure provided by the department's Fiber Committee.
- The information can be provided on a CD/DVD or Jump drive, which will be filed with the invoice information and not be returned.

- Invoice
  - Submission – Invoice submission should be to the chair of the department's fiber committee
  - Payment – payments are processed when all deliverables are met unless otherwise designated by the department's fiber committee
  - Re-submission – in some cases there is a need to request a re-submission due to cost changes or scope changes. All changes in invoicing should have a valid change request describing the need for the change in scope or cost. These forms are generated by the department's fiber committee and signed by the fiber contractor.

Invoicing
- Once the department's fiber committee has processed the deliverables and the invoice has been checked for accuracy, the invoice is submitted for payment by the department's fiber committee chair.
- All information is filed and stored for review both physically and electronically.

PART 27 APPENDIX H - CERTIFIED CONTRACTOR LIST

Certified Contractor List

Standard ID:	**AC-Wireless-001**
Title:	**Wireless Standard**
Domain:	**Architecture**
Discipline:	**Network**
Revision Date: Revision no.: Original date:	**11/2/2017** **8** **7/1/2001**

I. Authority, Applicability and Purpose

A. Authority: Title 29, Chapter 90C provides broad statutory authority to the Department of Technology and Information (DTI) to implement statewide and inter-organization technology solutions, policies, standards, and guidelines for the State of Delaware's technology infrastructure. "Technology" means computing and telecommunications systems, their supporting infrastructure and interconnectivity used to acquire, transport, process, analyze, store, and disseminate information or data electronically. Technology includes systems and equipment associated with e-government and Internet initiatives.

B. Applicability: This applies to all State of Delaware communications and computing resources. DTI is an Executive Branch Organization and has no authority over the customers in Legislative and Judicial Branches, School Districts, and other Federal and Local Government entities that use these resources. However, all users must agree to abide by all policies and standards promulgated by DTI as a condition of funding and continued use of these resources.

C. Purpose: The purpose of this standard is to ensure that all access points are secure before attaching to the existing network. The main considerations should be classification of use, intended user, and network security.

II. Scope

A. Audience: State IT personnel are the only intended users of this document.

B. Applicability: This standard will cover all wireless network access to State resources.

III. Process

A. Adoption: DTI adopted these standards through the Technology and Architecture Standards Committee (TASC). They are applicable to all Information Technology use throughout the State of Delaware.

B. Revision: Technology is constantly changing. It is the intent of TASC to review each standard yearly. Your Information Resource Manager (IRM) will channel your suggestions and comments to TASC.

C. Contractors: DTI requires all contractors or other third parties to comply with these standards when proposing technology solutions to other State entities. Failure to do so could result in rejection by the Delaware Technology Investment Council. For further guidance, or to seek review of a non-rated component, contact TASC at dti_tasc@state.de.us.

D. Implementation responsibility: DTI and/or the organization's technical staff will implement this standard during the course of normal business activities, including business case review, architectural review, project execution and the design, development, or support of systems.

E. Enforcement: DTI will enforce this standard during the course of normal business activities, including business case and architectural review of proposed projects and during the design, development, or support of systems. This standard may also be enforced by others during the course of their normal business activities, including audits and design reviews.

F. Contact us: Please direct any questions or comments to dti_tasc@state.de.us.

IV. Definitions/Declarations

A. Declarations

- Where authentication is warranted, time-stamped logging of access is required. When user based authentication is used, the logs should map usernames to IP addresses. When device based authentication is used device to IP address mapping must be retained. These logs should be retained for a minimum of three months.
- Proper placement of Access Point (AP) and power levels must be such that it will mitigate, as much as possible, the wireless signal extending into public spaces that are not State owned.

V. Definition of Ratings

COMPONENT RATING	USAGE NOTES
STANDARD – DTI offers internal support and/or has arranged for external vendor support as well (where applicable). DTI believes the component is robust and DTI believes the component is robust and solidly positioned in its product life cycle.	These components can be used without explicit DTI approval for both **new projects** and **enhancement** of existing systems.
DECLINING – Deprecated - DTI considers the component to be a likely candidate to have support discontinued in the near future. A deprecated element is one becoming invalid or obsolete.	Via the State's waiver process, these components must be explicitly approved by DTI for **all projects**. They must not be used for **minor enhancement** and **system maintenance** without explicit DTI approval via the State's waiver process.
DISALLOWED – DTI declares the component to be unacceptable for use and will actively intervene to disallow its use when discovered.	No waiver requests for new solutions with this component rating will be considered.

A. Missing Components: No conclusions should be inferred if a specific component is not listed. Instead, contact TASC to obtain further information.

VI. Component Assessments

A. Scope: The below assessments are to be utilized when the State's wireless services are not available and a specific wireless deployment is being designed.

Access Point	Rating	Comments
Aerohive AP250	Standard	This model current as of July 2017. Please consult with DTI before acquiring.
Cisco Aironet 1852i	Standard	This model current as of July 2017. Please consult with DTI before acquiring.

Protocol	Rating	Comments
802.11n	Standard	Adds MIMO, Uses 2.4 Ghz or 5Ghz. 600Mb/s
802.11ac	Standard	Wave 1: 80MHZ channel width , 1.3Gbps, single user MIMO Wave 2: 160Mhz channel width, 2.6Gps, multi-user MIMO
802.11g	Declining	Uses 2.4Ghz. Maximum of 54Mb/s
802.11a	Declining	Uses 5Ghz. Maximum of 54Mb/s
802.11b	Disallow	Does not support AES; therefore is no longer allowed.

Encryption Algorithms	Rating	Comments
WPA2 AES-CCMP	Standard	Wireless security standard v2 using AES
WEP	Disallow	Wireless security standard using TKIP
WPA	Disallow	Wireless security algorithm using RC4

Authentication	Rating	Comments
802.1X	Standard	Port-based access control method
PEAP/MS-CHAPv2	Standard	Authentication process using username/password
PEAP-EAP-TTLS	Standard	Authentication process using username/password
PEAP-EAP-TLS	Standard	Client certificate authentication

Pre-shared key	Standard	Depends on the situation.
No authentication	Standard	Depends on the situation.

PART 3 EXECUTION

3.01 INSTALLATION - GENERAL

A. Comply with Delaware Sate-Wide Information Techanology and Architecture Standards (NE-Cabling-002)

B. Comply with Communication Service Provider requirements.

C. Grounding and Bonding: Perform in accordance with TIA-607 and NFPA 70.

D. Install firestopping to preserve fire resistance rating of partitions and other elements, using materials and methods specified in Section 07 84 00.

3.02 INSTALLATION OF PATHWAYS

A. Install pathways with the following minimum clearances:
   1. 48 inches from motors, generators, frequency converters, transformers, x-ray equipment, and uninterruptible power systems.
   2. 12 inches from power conduits and cables and panelboards.
   3. 5 inches from fluorescent and high frequency lighting fixtures.
   4. 6 inches from flues, hot water pipes, and steam pipes.

B. Grounding and Bonding: Perform in accordance with ANSI/J-STD-607 and NFPA 70.

C. Firestopping: Seal openings around pathway penetrations through fire-rated walls, partitions, floors, and ceilings in accordance with Section 07 8400.

END OF SECTION