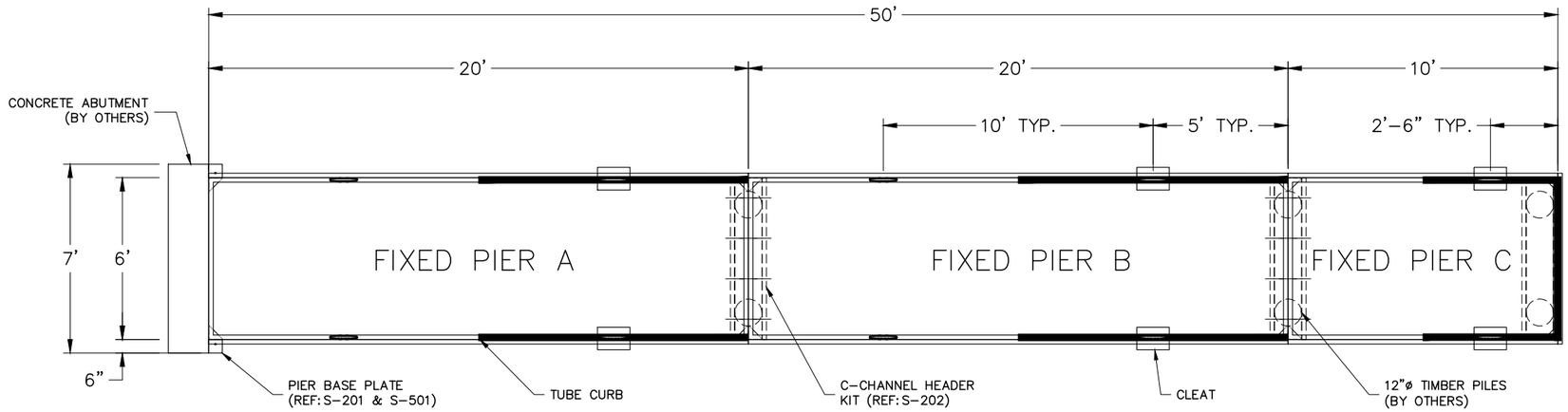

FIXED PIER PLAN

SCALE: 3/16" = 1'-0"

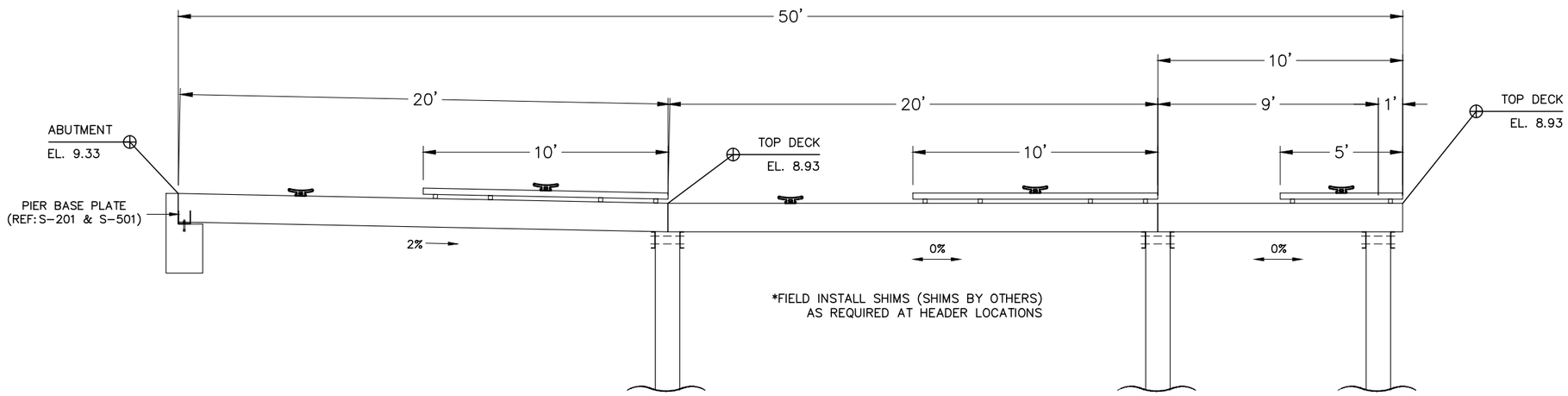

FIXED PIER ELEVATION

SCALE: 3/16" = 1'-0"

NOTES:

1. ALL STRUCTURAL ALUMINUM IS ALLOY 6061-T6, MILL FINISH.
2. ALL JOINTS ARE FULLY WELDED UNLESS NOTED OTHERWISE. FILLER METAL TO BE 5356 SERIES WIRE.
3. ALL HARDWARE IS STAINLESS STEEL, SERIES 304. USE PERMATEX ANTI-SEIZE LUBRICANT OR EQUAL.
4. ALL WOOD FENDERS TO BE S.YP. #1 PRESSURE TREATED TO 0.40 PCF ACQ MINIMUM OR EQUAL. ISOLATE WOOD FROM ALUMINUM WITH BITUMINOUS PAINT, CARBOLINE BIT 50 OR EQUAL.
5. FIXED PIERS DESIGNED FOR 40 PSF LIVE LOAD, L/180 DEFLECTION.
6. PILE LOCATIONS ARE SUGGESTED FOR COMPATIBILITY WITH PIER LAYOUT ONLY. PILE TYPE, SIZE, QTY, AND DESIGN BY OTHERS.
7. PIER DIMENSIONS SHOWN ARE NOMINAL FROM ALUMINUM TO ALUMINUM FRAME. FINAL FINISHED DIMENSIONS WILL VARY ACCORDING TO INSTALLED FENDERS & BUMPERS.
8. HEADER CHANNELS ARE A FOOT WIDER THAN THE PLAN LENGTH AND SHALL BE CUT IN THE FIELD (BY OTHERS).

GatorDock
Marine Access Solutions

2880 MELLONVILLE AVE, SANFORD, FL 32773
800/256-8857 407/323-0190

THE INFORMATION CONTAINED IN THIS DRAWING IS THE SOLE PROPERTY OF GATOR DOCK & MARINE, LLC. ANY REPRODUCTION IN PART OR AS A WHOLE WITHOUT THE WRITTEN PERMISSION OF GATOR DOCK & MARINE, LLC IS PROHIBITED.

RECORD OF REVISIONS

No.	DATE	DESCRIPTION:
	5/11/20	CONCEPTUAL
1	5/27/20	REVISED CONCEPTUAL
2		

PROJECT NAME:
WAGAMONS POND

CUSTOMER NAME:
DELAWARE DNREC

CUSTOMER ADDRESS:
89 KINGS HIGHWAY
DOVER, DE 19901

PROJECT LOCATION:
MULBERRY ST,
TOWN OF MILTON, SUSSEX COUNTY, DELAWARE

CMI ORDER NO.:
—

CUST. PO NO.:
—

	NAME	DATE
DRAWN BY:	JS	5/11/20
CHECKED BY:	JF	5/11/20

DRAWING NO.:
S-101
OVERALL PLAN

SHEET: 1 of 5

Physical properties are defined by ASTM testing standards, The Aluminum Association Design Manual, and/or standard engineering practice. The values shown are nominal and may vary. The information found in this document is believed to be true and accurate. No warranties of any kind are made as to the suitability of any CMI product for particular applications or the results obtained there from. ShoreGuard, C-Loc, TimberGuard, GeoGuard, Dura Dock, Shore-All, and Gator Gates are registered trademarks of CMI. ArmorWare, Ultra Composite, GatorDocks, and CMI Waterfront Solutions are trademarks of CMI. United States and International numbers 5,145,287; 5,881,508; 6,000,883; 6,033,155; 6,053,666; D420,154; 4,674,921; 4,690,588; 5,292,208; 6,575,667; 7,059,807; 7,056,066; 7,025,539; 1,245,061; @ Other patents pending. 2019 CMI LIMITED Co. All Rights Reserved.

CONCEPTUAL

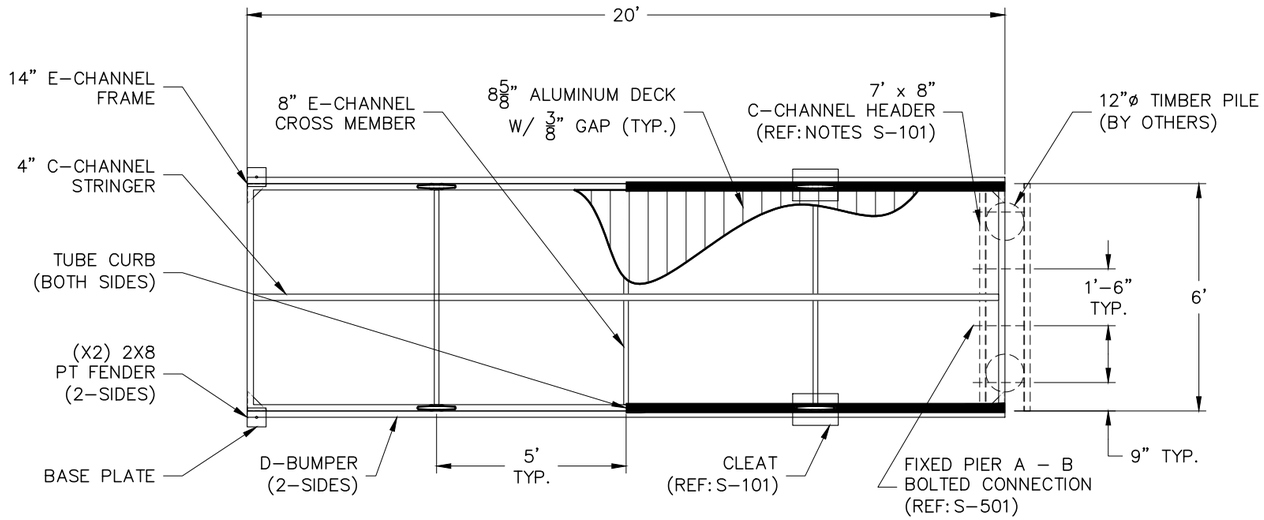

FIXED PIER A PLAN

SCALE: 1/4" = 1'-0"

APPROX. WEIGHT = 900 lbs

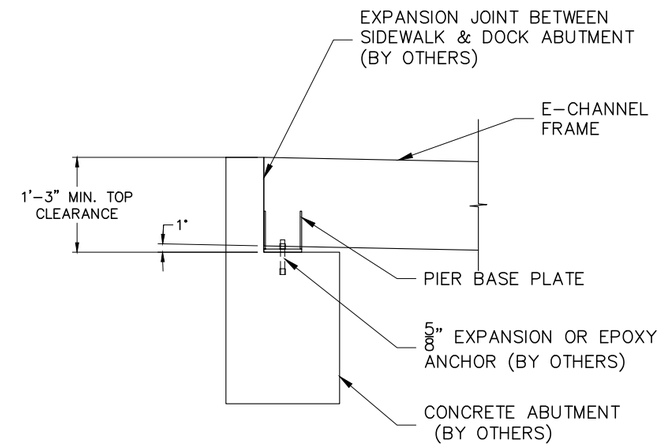

BASE PLATE CONNECTION

1/2" = 1'-0"

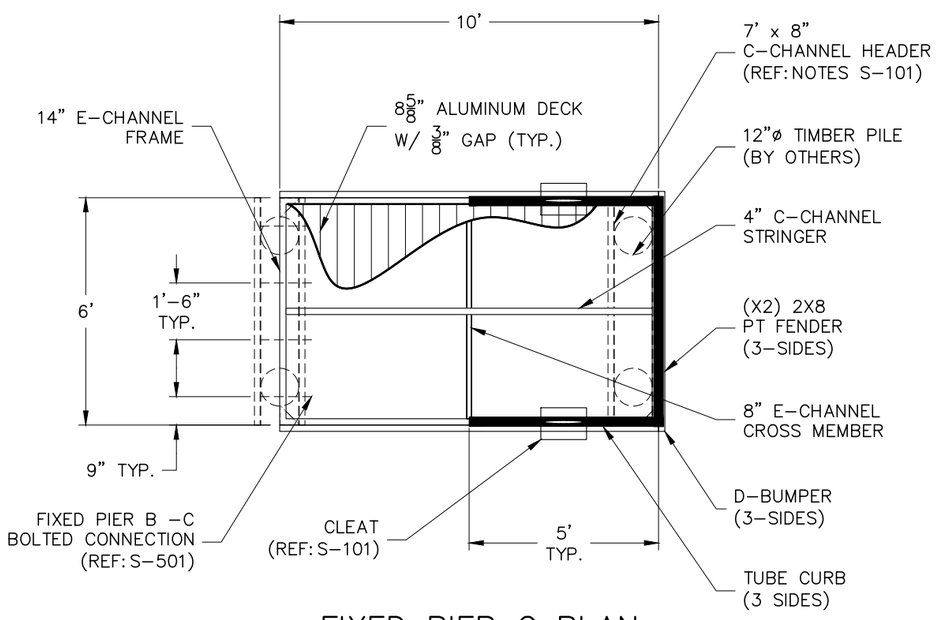

FIXED PIER C PLAN

SCALE: 1/4" = 1'-0"

APPROX. WEIGHT = 500 lbs

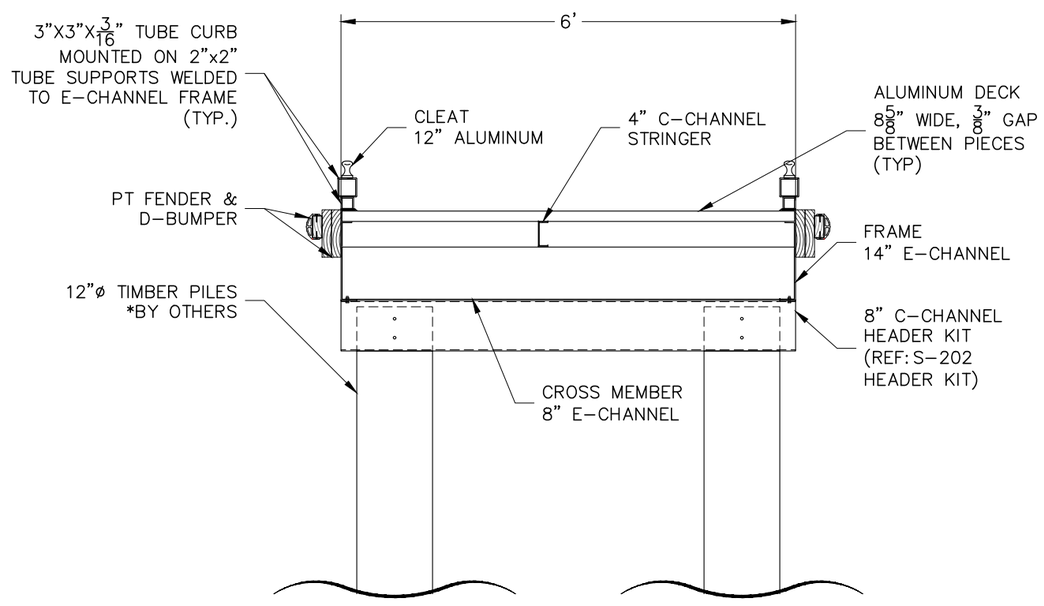

FIXED PIER SECTION (TYP.)

1/2" = 1'-0"

GatorDock
Marine Access Solutions

2880 MELLONVILLE AVE, SANFORD, FL 32773
800/256-8857 407/323-0190

THE INFORMATION CONTAINED IN THIS DRAWING IS THE SOLE PROPERTY OF GATOR DOCK & MARINE, LLC. ANY REPRODUCTION IN PART OR AS A WHOLE WITHOUT THE WRITTEN PERMISSION OF GATOR DOCK & MARINE, LLC IS PROHIBITED.

RECORD OF REVISIONS

No.	DATE	DESCRIPTION:
	5/11/20	CONCEPTUAL
1	5/27/20	REVISED CONCEPTUAL
2		

PROJECT NAME:
WAGAMONS POND

CUSTOMER NAME:
DELAWARE DNREC

CUSTOMER ADDRESS:
89 KINGS HIGHWAY
DOVER, DE 19901

PROJECT LOCATION:
MULBERRY ST,
TOWN OF MILTON, SUSSEX COUNTY, DELAWARE

CMI ORDER NO.:
—

CUST. PO NO.:
—

	NAME	DATE
DRAWN BY:	JS	5/11/20
CHECKED BY:	JF	5/11/20

DRAWING NO.:
S-201
FIXED PIER A & C

SHEET: 2 of 5

Physical properties are defined by ASTM testing standards, The Aluminum Association Design Manual, and/or standard engineering practice. The values shown are nominal and may vary. The information found in this document is believed to be true and accurate. No warranties of any kind are made as to the suitability of any CMI product for particular applications or the results obtained there from. ShoreGuard, C-Loc, TimberGuard, GeoGuard, Dura Dock, Shore-All, and Gator Gates are registered trademarks of CMI. ArmorWare, Ultra Composite, GatorDocks, and CMI Waterfront Solutions are trademarks of CMI. United States and International numbers 5,145,287; 5,881,508; 6,000,883; 6,033,155; 6,053,666; D420,154; 4,674,921; 4,690,588; 5,292,208; 6,575,667; 7,059,807; 7,056,066; 7,025,539; 1,245,061; @ Other patents pending. 2019 CMI LIMITED Co. All Rights Reserved.

CONCEPTUAL

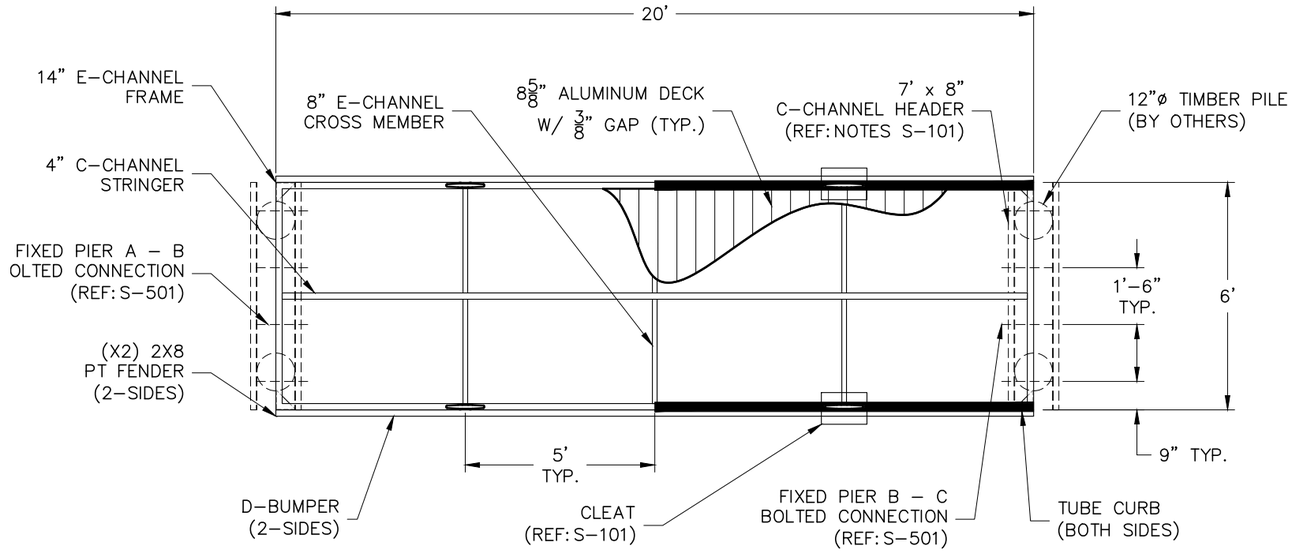

FIXED PIER B PLAN

SCALE: 1/4" = 1'-0"

APPROX. WEIGHT = 900 lbs

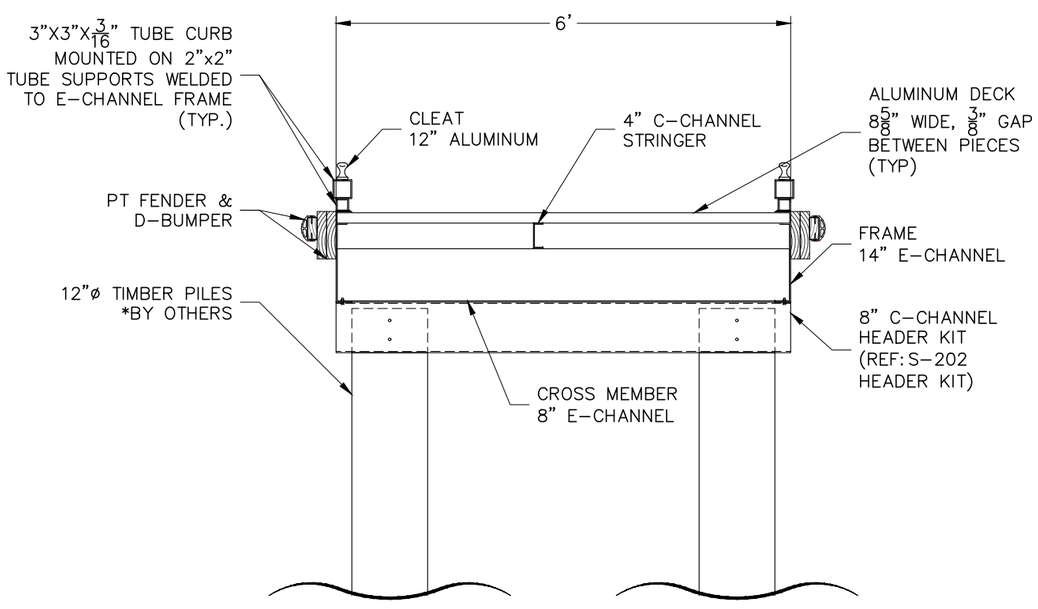

FIXED PIER B SECTION

1/2" = 1'-0"

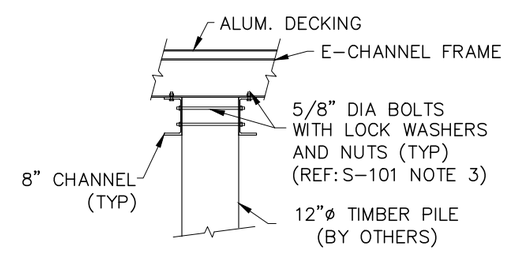

HEADER KIT

SCALE: NTS

ALUMINUM CHANNELS COATED WITH ISOLATING MATERIAL – BITUMINOUS TAPE OR PAINT BY OTHERS.

– FIELD DRILL HOLES FOR HARDWARE BY OTHERS.

GatorDock
Marine Access Solutions

2880 MELLONVILLE AVE, SANFORD, FL 32773
800/256-8857 407/323-0190

THE INFORMATION CONTAINED IN THIS DRAWING IS THE SOLE PROPERTY OF GATOR DOCK & MARINE, LLC. ANY REPRODUCTION IN PART OR AS A WHOLE WITHOUT THE WRITTEN PERMISSION OF GATOR DOCK & MARINE, LLC IS PROHIBITED.

RECORD OF REVISIONS

No.	DATE	DESCRIPTION:
	5/11/20	CONCEPTUAL
1	5/27/20	REVISED CONCEPTUAL
2		

PROJECT NAME:
WAGAMONS POND

CUSTOMER NAME:
DELAWARE DNREC

CUSTOMER ADDRESS:
89 KINGS HIGHWAY
DOVER, DE 19901

PROJECT LOCATION:
MULBERRY ST,
TOWN OF MILTON, SUSSEX COUNTY, DELAWARE

CMI ORDER NO.:
—

CUST. PO NO.:
—

	NAME	DATE
DRAWN BY:	JS	5/11/20
CHECKED BY:	JF	5/11/20

DRAWING NO.:
S-202
FIXED PIER B

SHEET: 3 of 5

Physical properties are defined by ASTM testing standards, The Aluminum Association Design Manual, and/or standard engineering practice. The values shown are nominal and may vary. The information found in this document is believed to be true and accurate. No warranties of any kind are made as to the suitability of any CMI product for particular applications or the results obtained there from. ShoreGuard, C-Loc, TimberGuard, GeoGuard, Dura Dock, Shore-All, and Gator Gates are registered trademarks of CMI. ArmorWare, Ultra Composite, GatorDocks, and CMI Waterfront Solutions are trademarks of CMI. United States and International numbers 5,145,287; 5,881,508; 6,000,883; 6,033,155; 6,053,666; D420,154; 4,674,921; 4,690,588; 5,292,208; 6,575,667; 7,059,807; 7,056,066; 7,025,539; 1,245,061; @ Other patents pending. 2019 CMI LIMITED Co. All Rights Reserved.

CONCEPTUAL

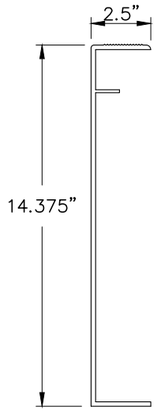

14" E-CHANNEL
SCALE: NTS

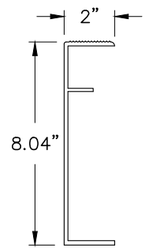

8" E-CHANNEL
SCALE: NTS

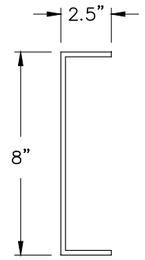

8" CHANNEL
SCALE: NTS

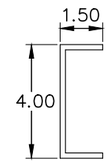

4" CHANNEL
SCALE: NTS

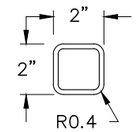

2"x2"x$\frac{3}{16}$"TUBE
SCALE: NTS

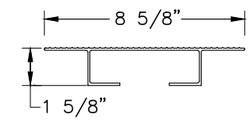

ALUMINUM RIBBED DECKING
SCALE: NTS
(LIGHT KNURL TO RUN PERPENDICULAR TO RIBS.)

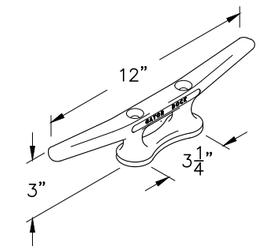

ALUMINUM CLEAT
SCALE: NTS
* CLEAT TO BE BOLTED

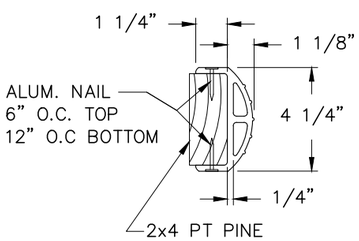

WHITE VINYL D-BUMPER
SCALE: NTS

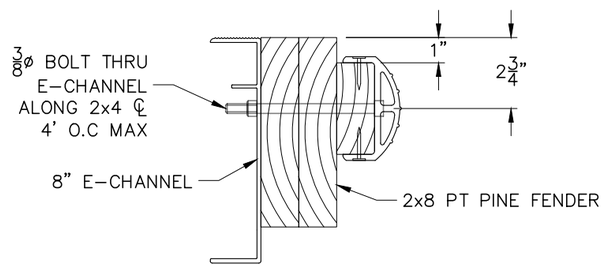

VINYL D-BUMPER ATTACHMENT DETAIL
SCALE: NTS

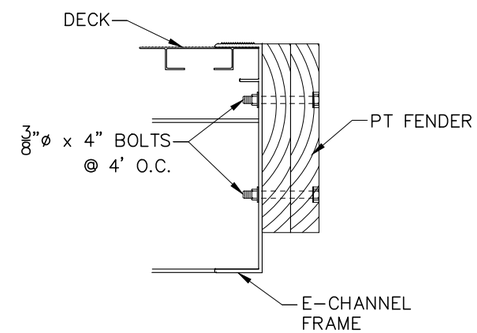

PT FENDER BOLT DETAIL
SCALE: NTS

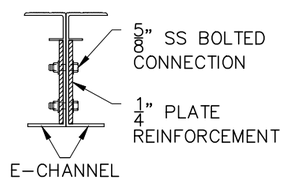

FIXED PIER-TO-PIER BOLTED CONNECTION
SCALE: NTS

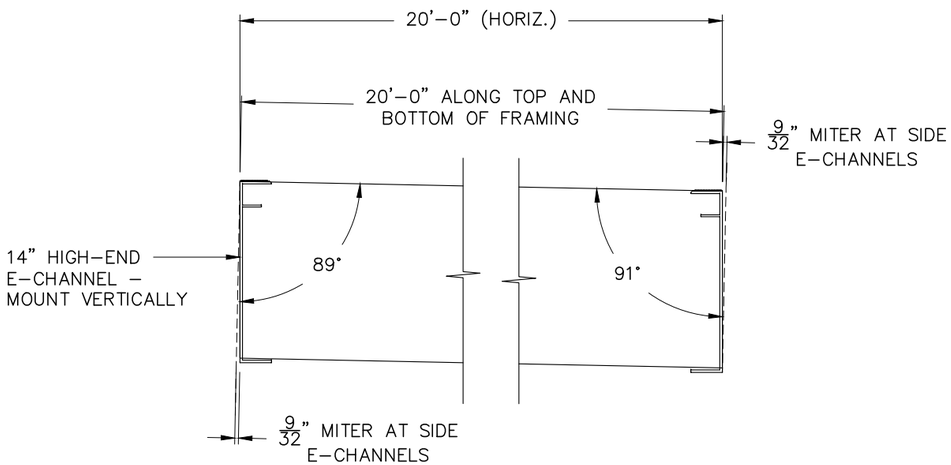

SIDE CHANNEL DETAIL
SCALE: 1" = 1'-0"

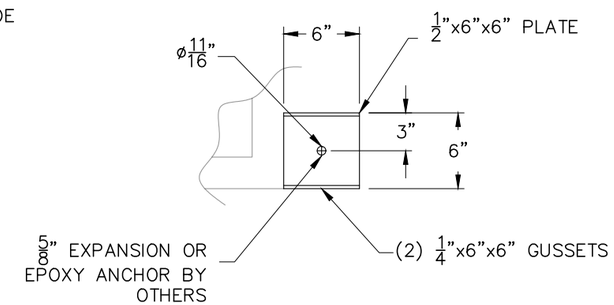

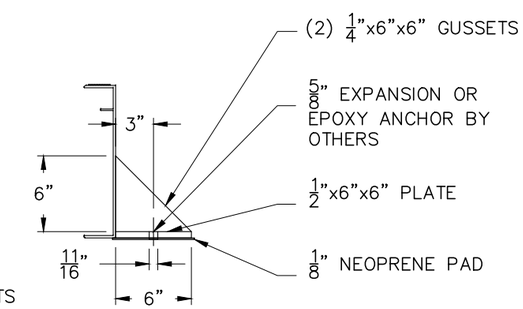

PIER BASE PLATE DETAIL
SCALE: 1" = 1'-0"

GatorDock
Marine Access Solutions
2880 MELLONVILLE AVE, SANFORD, FL 32773
800/256-8857 407/323-0190

THE INFORMATION CONTAINED IN THIS DRAWING IS THE SOLE PROPERTY OF GATOR DOCK & MARINE, LLC. ANY REPRODUCTION IN PART OR AS A WHOLE WITHOUT THE WRITTEN PERMISSION OF GATOR DOCK & MARINE, LLC IS PROHIBITED.

RECORD OF REVISIONS

No.	DATE	DESCRIPTION:
	5/11/20	CONCEPTUAL
1	5/27/20	REVISED CONCEPTUAL
2		

PROJECT NAME:
WAGAMONS POND

CUSTOMER NAME:
DELAWARE DNREC

CUSTOMER ADDRESS:
89 KINGS HIGHWAY
DOVER, DE 19901

PROJECT LOCATION:
MULBERRY ST,
TOWN OF MILTON, SUSSEX COUNTY, DELAWARE

CMI ORDER NO.:
_

CUST. PO NO.:
_

	NAME	DATE
DRAWN BY:	JS	5/11/20
CHECKED BY:	JF	5/11/20

DRAWING NO.:
S-501
COMPONENT DETAIL

SHEET: 4 of 5

Physical properties are defined by ASTM testing standards, The Aluminum Association Design Manual, and/or standard engineering practice. The values shown are nominal and may vary. The information found in this document is believed to be true and accurate. No warranties of any kind are made as to the suitability of any CMI product for particular applications or the results obtained there from. ShoreGuard, C-Loc, TimberGuard, GeoGuard, Dura Dock, Shore-All, and Gator Gates are registered trademarks of CMI. ArmorWare, Ultra Composite, GatorDocks, and CMI Waterfront Solutions are trademarks of CMI. United States and International numbers 5,145,287; 5,881,508; 6,000,883; 6,033,155; 6,053,666; D420,154; 4,674,921; 4,690,588; 5,292,208; 6,575,667; 7,059,807; 7,056,066; 7,025,539; 1,245,061; © Other patents pending. 2019 CMI LIMITED Co. All Rights Reserved.

CONCEPTUAL

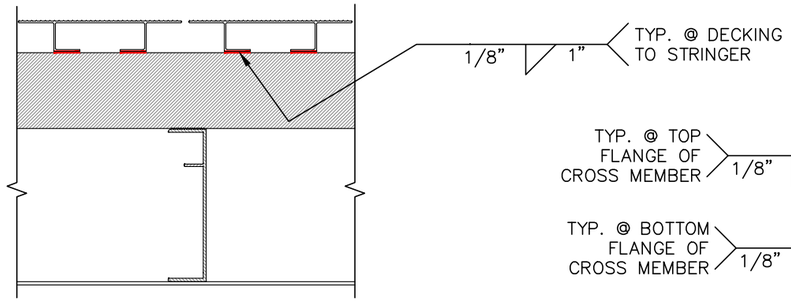

WELDS @ DECKING TO STRINGER

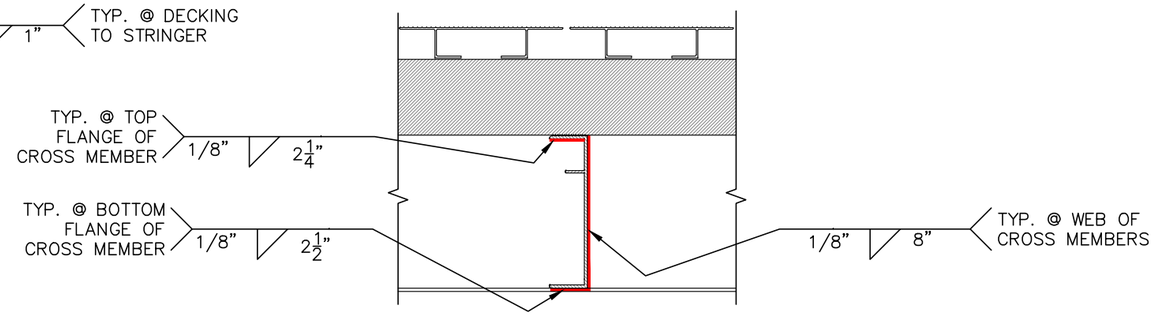

E-CHANNEL WELDS @ FLOOR BEAM

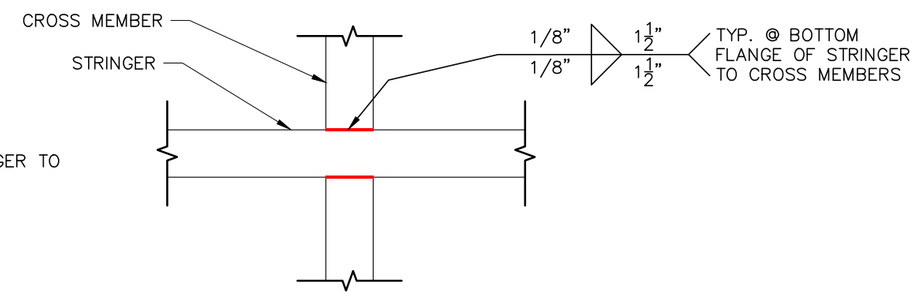

WELDS @ FLOOR BEAMS TO STRINGERS

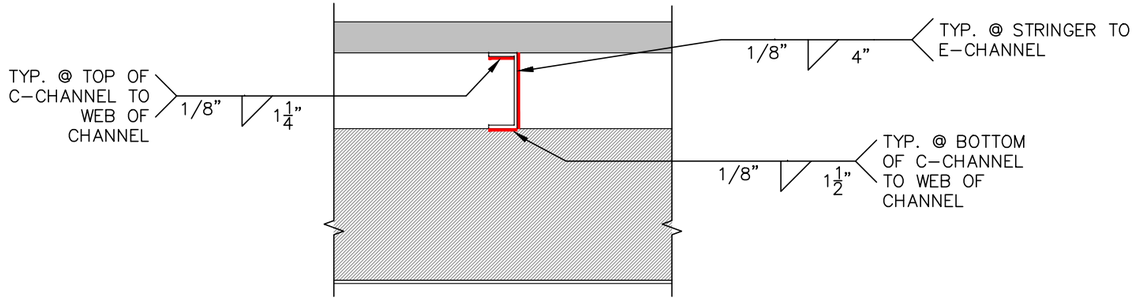

14" E-CHANNEL WELDS @ STRINGER

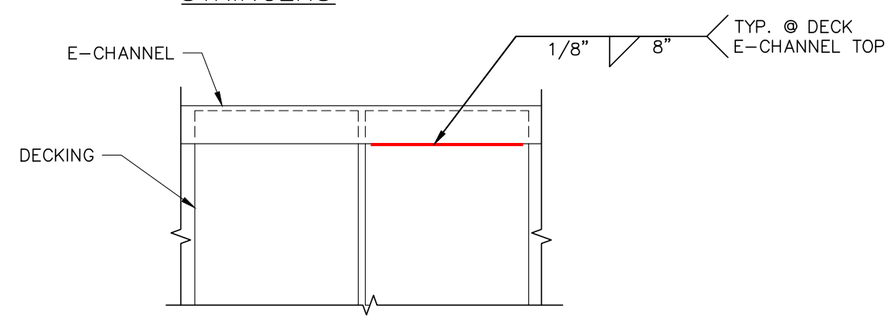

DECK TO E-CHANNEL

GatorDock
Marine Access Solutions

2880 MELLONVILLE AVE, SANFORD, FL 32773
800/256-8857 407/323-0190

THE INFORMATION CONTAINED IN THIS DRAWING IS THE SOLE PROPERTY OF GATOR DOCK & MARINE, LLC. ANY REPRODUCTION IN PART OR AS A WHOLE WITHOUT THE WRITTEN PERMISSION OF GATOR DOCK & MARINE, LLC IS PROHIBITED.

RECORD OF REVISIONS

No.	DATE	DESCRIPTION:
	5/11/20	CONCEPTUAL
1	5/27/20	REVISED CONCEPTUAL
2		

PROJECT NAME:
WAGAMONS POND

CUSTOMER NAME:
DELAWARE DNREC

CUSTOMER ADDRESS:
89 KINGS HIGHWAY
DOVER, DE 19901

PROJECT LOCATION:
MULBERRY ST,
TOWN OF MILTON, SUSSEX COUNTY, DELAWARE

CMI ORDER NO.:
—

CUST. PO NO.:
—

	NAME	DATE
DRAWN BY:	JS	5/11/20
CHECKED BY:	JF	5/11/20

DRAWING NO.:
S-602
WELD DETAILS

SHEET: 5 of 5

Physical properties are defined by ASTM testing standards, The Aluminum Association Design Manual, and/or standard engineering practice. The values shown are nominal and may vary. The information found in this document is believed to be true and accurate. No warranties of any kind are made as to the suitability of any CMI product for particular applications or the results obtained there from. ShoreGuard, C-Loc, TimberGuard, GeoGuard, Dura Dock, Shore-All, and Gator Gates are registered trademarks of CMI. ArmorWare, Ultra Composite, GatorDocks, and CMI Waterfront Solutions are trademarks of CMI. United States and International numbers 5,145,287; 5,881,508; 6,000,883; 6,033,155; 6,053,666; D420,154; 4,674,921; 4,690,588; 5,292,208; 6,575,667; 7,059,807; 7,056,066; 7,025,539; 1,245,061; @ Other patents pending. 2019 CMI LIMITED Co. All Rights Reserved.

CONCEPTUAL