CONSTRUCTION PLANS

FOR

DELAWARE DIVISION OF FISH & WILDLIFE

WAGAMONS POND BOAT RAMP RECONSTRUCTION

TP #: 235-20.00-4.00

MULBERRY STREET

TOWN OF MILTON, SUSSEX COUNTY, DELAWARE

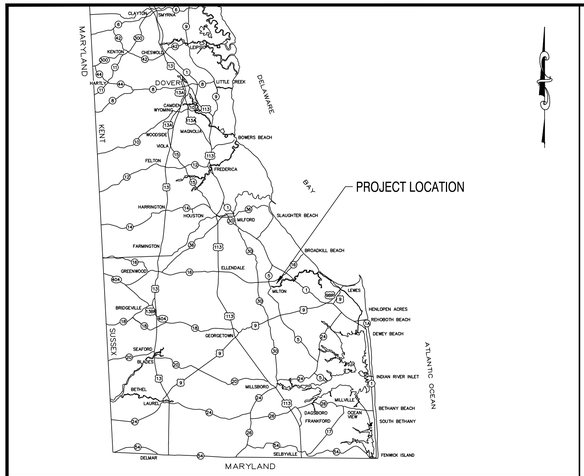

LOCATION MAP SCALE: NTS

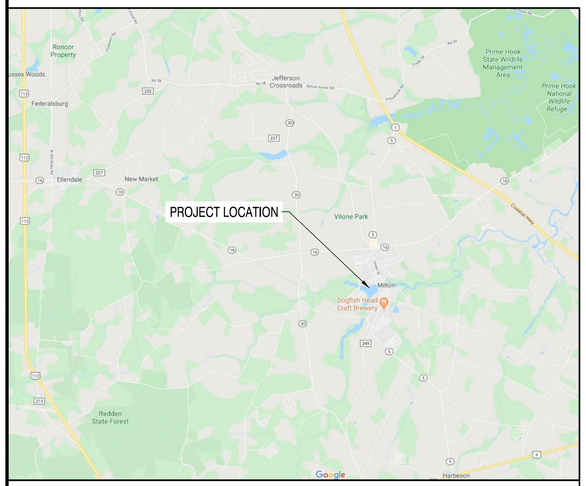

AREA MAP SCALE: 1" = 1 MILE

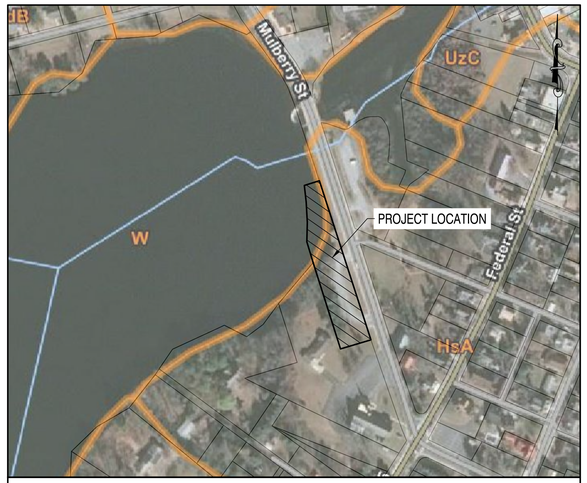

SOIL MAP SCALE: 1" = 200'

SOIL LEGEND:

HsA = HENLOPEN-ROSEDALE-URBAN LAND COMPLEX, 0 TO 2 PERCENT SLOPES, HYDROLOGIC SOIL GROUP A

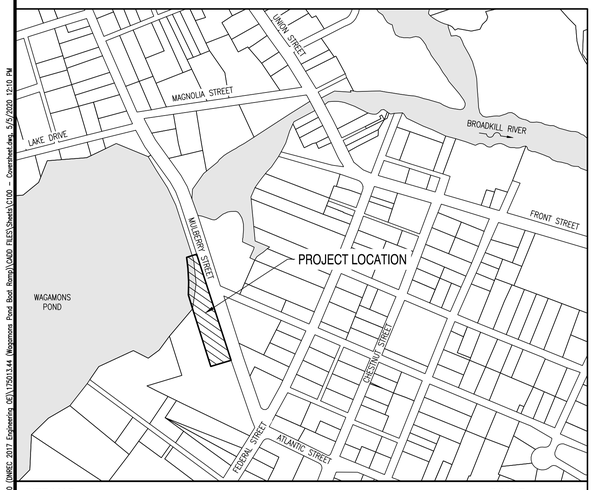

SITE MAP SCALE: 1" = 300'

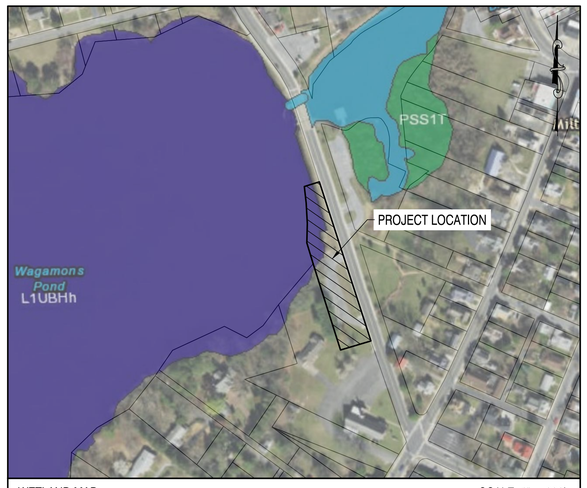

WETLAND MAP SCALE: 1" = 200'

WETLAND LEGEND:

L1UBHh = Lacustrine System, Limnetic Subsystem, Unconsolidated Bottom, Permanently Flooded, Diked/Impounded

INDEX OF SHEETS:

C100 - COVERSHEET
C101 - PROJECT NOTES & LEGEND
C102 - EXISTING CONDITIONS
C103 - SITE PLAN
C104 - BOAT RAMP DETAILS
C105 - FIXED DOCK & SIDEWALK DETAILS
C106 - STRUCTURAL DETAILS
C107 - CONSTRUCTION DETAILS
C108 - EROSION & SEDIMENT CONTROL DETAILS
C109 - EROSION & SEDIMENT CONTROL DETAILS
C110 - EROSION & SEDIMENT CONTROL DETAILS
C111 - EROSION & SEDIMENT CONTROL DETAILS

DATA COLUMN

1. TAX PARCEL NUMBER: 235-20.00-4.00
2. SUSSEX COUNTY FILE NUMBER: ————————————
3. ADDRESS OF SITE: MULBERRY STREET, MILTON, DE 19968
4. ZONING: R1
5. SOURCE OF TITLE: D.B. 1465, PG. 183
6. NUMBER OF LOTS: 1
7. SETBACK LINES:

	ORDINANCE	REQUIRED
FRONT YARD:	TOWN OF MILTON, 2015-006	30'
SIDE YARD:	TOWN OF MILTON, 2015-006	10'
REAR YARD:	TOWN OF MILTON, 2015-006	15'
MIN LOT WIDTH:	TOWN OF MILTON, 2015-006	70'

8. LOT AREA: 57.52± ACRES (BASED ON SUSSEX COUNTY GIS MAPPING)
9. EXISTING USE: BOAT RAMP
10. PROPOSED USE: BOAT RAMP
11. TOTAL NUMBER OF LOTS: 1 (NO NEW BUILDING LOTS OR OR DWELLINGS PROPOSED BY THIS PLAN)
12. PROPOSED BUILDING SQUARE FOOTAGE: 0 SF
13. MONUMENTS:
    EXISTING: 1 (CONCRETE MONUMENT)
    PROPOSED: NONE
14. ELECTRIC PROVIDER: NO ELECTRIC PROPOSED FOR SITE
15. SEWER PROVIDER: NO SEWER PROPOSED FOR SITE
16. WATER PROVIDER: NO ON-SITE WELL OR WATER SERVICE PROPOSED FOR SITE
17. PARKING:
    REQUIRED: N/A
    PROPOSED: 8
18. SITE BREAKDOWN (WITHIN PROJECT LOC):

EXISTING SITE	
OPEN SPACE:	15,775± S.F.
WATER:	3,279± S.F.
ASPHALT:	10,005± S.F.
CONCRETE:	1,692± S.F.
OVERALL TOTAL:	30,751± S.F.

PROPOSED SITE	
OPEN SPACE:	15,212± S.F.
WATER:	3,279± S.F.
ASPHALT:	10,005± S.F.
CONCRETE:	2,255± S.F.
OVERALL TOTAL:	30,751± S.F.

19. WETLANDS:
    A WETLANDS INVESTIGATION HAS BEEN PERFORMED ON THE SUBJECT PROPERTY BY CENTURY ENGINEERING, INC. IN OCTOBER, 2019.
20. FLOODPLAIN:
    ACCORDING TO FIRM NO. 10005C0164J, DATED JANUARY 6, 2005, PORTIONS OF THE SUBJECT PARCEL ARE DETERMINED TO BE WITHIN ZONE AE. (BASE FLOOD ELEVATION DETERMINED: ELEV. 8.5 FEET).
21. BOUNDARY:
    NO BOUNDARY SURVEY HAS BEEN COMPLETED.
22. TOPOGRAPHY:
    TOPOGRAPHY SHOWN TAKEN FROM A SURVEY PERFORMED BY CENTURY ENGINEERING, INC. IN SEPTEMBER 2019.
23. HORIZONTAL DATUM: NAD83
    VERTICAL DATUM: NAVD88
24. TOTAL LOD OF SITE: 3,590 SF (NO SEDIMENT & STORMWATER MANAGEMENT APPROVAL REQUIRED)
25. SITE BENCHMARK:
26. OWNER/APPLICANT:
    STATE OF DELAWARE
    DIVISION OF FISH & WILDLIFE
    89 KINGS HIGHWAY
    DOVER, DE 19901
    JEREMEY ASHE
    (302) 735-3601
27. ENGINEER:
    CENTURY ENGINEERING, INC.
    550 BAY ROAD
    DOVER, DE 19901
    ALEXANDER SCHMIDT, P.E.
    (302) 734-9188

WETLANDS PERMITTING

A NATIONWIDE PERMIT 36 (PERMIT NUMBER: CENAP-OP-R-2020-99-85) FROM THE UNITED STATES ARMY CORPS OF ENGINEERS WILL BE OBTAINED TO PERMIT THE DISTURBANCES TO EXISTING FEDERALLY REGULATED WATERS OF THE UNITED STATES. A SUBAQUEOUS LANDS PERMIT FROM THE DNREC WETLANDS AND SUBAQUEOUS LANDS SECTION WILL BE SOUGHT FOR IMPACTS TO THE EXISTING STATE SUBAQUEOUS LANDS.

CERTIFICATION OF OWNERSHIP

I, JEREMEY ASHE, HEREBY CERTIFY THAT DELAWARE DIVISION OF FISH & WILDLIFE IS THE OWNER OF THE PROPERTY DESCRIBED AND SHOWN ON THIS PLAN, THAT THE PLAN WAS MADE AT MY DIRECTION, AND THAT I ACKNOWLEDGE THE SAME TO ME BY ACT AND DESIRE THE PLAN TO BE DEVELOPED AS SHOWN IN ACCORDANCE WITH ALL APPLICABLE LAWS AND REGULATIONS.

JEREMEY ASHE – CONSTRUCTION MANAGER DATE
DELAWARE DIVISION OF FISH & WILDLIFE
89 KINGS HIGHWAY
DOVER, DE 19901
PHONE: (302) 735-3601

CERTIFICATION OF PLAN ACCURACY

I, ALEXANDER SCHMIDT HEREBY CERTIFY THAT THIS PLAN HAS BEEN PREPARED UNDER MY SUPERVISION AND TO THE BEST OF MY KNOWLEDGE COMPLIES WITH THE APPLICABLE STATE AND LOCAL REGULATIONS AND ORDINANCES.

September 14, 2020

ALEXANDER E. SCHMIDT, P.E., DE NO. 16139 DATE
CENTURY ENGINEERING, INC.
550 BAY ROAD
DOVER, DELAWARE 19901
PHONE: (302) 734-9188 / FAX: (302) 734-4589

ALEXANDER E. SCHMIDT LICENSE No. 16139 DELAWARE PROFESSIONAL ENGINEER

This drawing is the property of Century Engineering, Inc. and is prepared for the exclusive use of its clients at the location indicated. No other use is authorized or intended.

CENTURY ENGINEERING, INC.
ADDRESS: 550 BAY ROAD DOVER, DE 19901
P: (302) 734-9188 F: (302) 734-4589
WEBSITE: www.centuryeng.com
EMAIL: ce@centuryeng.com

REVISIONS

ADDENDUM

DESCRIPTION	DATE

PROJECT: CONSTRUCTION PLANS FOR DELAWARE DIVISION OF FISH & WILDLIFE WAGAMONS POND BOAT RAMP RECONSTRUCTION BROADKILL HUNDRED, SUSSEX COUNTY, DELAWARE

SHEET TITLE: COVERSHEET

DIV. OF FISH AND WILDLIFE 100% SUBMISSION
MAY, 2020

DRAWN: DFS/MDS
CHK'D/DESIGNER: AES
SCALE: 1" = 30'
SHEET NO.: C100
PROJECT NO.: 175013.44

O:\Projects\175013.00 (NABC 2017 Engineering QC)\175013.44 (Wagamons Pond Boat Ramp)\CADD FILES\Sheets\C100 - Coversheet.dwg, 5/5/2020 12:10 PM

GENERAL NOTES:

1. THE CONTRACTOR SHALL NOTIFY DNREC FISHERIES DIVISION AT (302) 735-8654 SEVEN (7) DAYS PRIOR TO ANY CONSTRUCTION SO THAT FISHERIES CAN PREPARE APPROPRIATE PRESS RELEASES.
2. THERE SHALL BE NO IN WATER WORK COMPLETED APRIL 1 – JULY 30.
3. IT SHALL BE THE RESPONSIBILITY OF THE CONTRACTOR TO PLACE A MINIMUM OF TWO SIGNS INFORMING THE PUBLIC OF UPCOMING CONSTRUCTION ACTIVITIES AND AREA CLOSURE. THE SIGNS SHALL BE A MINIMUM OF 8.5"x11" LAMINATED PAPER AND SHALL SAY "NOTICE TO THE PUBLIC: THIS AREA WILL BE CLOSED FROM (INSERT DATE) TO (INSERT DATE) DUE TO CONSTRUCTION ACTIVITIES. PLEASE CALL THE DIVISION OF FISH & WILDLIFE FISHERIES SECTION AT 302-739-9914 WITH ANY QUESTIONS." SIGNS SHALL BE POSTED A MINIMUM OF TWO WEEKS BEFORE THE CONSTRUCTION CLOSURE. SIGN LOCATIONS SHALL BE COORDINATED WITH THE FISHERIES PROJECT MANAGER.
4. CONTRACTOR SHALL CONTACT MISS UTILITY OF DELMARVA AT 1-800-282-8555 48 HOURS PRIOR TO ANY EXCAVATION ACTIVITIES.
5. CONTRACTOR SHALL COORDINATE ALL CONSTRUCTION WITH WORKING DRAWINGS PROVIDED BY THE ALUMINUM DOCK MANUFACTURER.
6. THE CONTRACTOR SHALL CONTACT THE OWNER AND THE ENGINEER AT LEAST 48 HOURS PRIOR TO SHEET PILE AND/OR SUPPORT PILE INSTALLATION AND FOR ALL MEETINGS, INCLUDING PRE-CONSTRUCTION MEETINGS, AS REQUIRED IN THE CONSTRUCTION SPECIFICATIONS.
7. CONTRACTOR SHALL LOAD TEST ALL SUBGRADE SOIL PRIOR TO THE PLACEMENT OF THE SUBBASE COURSE. ALL UNSUITABLE MATERIAL FOUND SHALL BE EXCAVATED TO THE DEPTH OF STABLE SOIL AND BACKFILLED WITH APPROVED MATERIAL. THE CONTRACTOR SHALL COMPACT ALL MATERIALS TO MEET THE DELDOT STANDARD SPECIFICATIONS.
8. BORROW, TYPE B, SHALL BE UTILIZED FOR ALL UNDERCUT LOCATIONS AS DIRECTED BY ENGINEER IN THE FIELD.
9. IMPACTS TO SUBAQUEOUS LANDS HAVE BEEN PERMITTED WITHIN THE LOC LINE SHOWN. WORK BEYOND THE LOC IS STRICTLY PROHIBITED.
10. ALL FIXED DOCKS, HANDRAILS, ALUMINUM HEADER SUPPORT CHANNELS, AND ANCILLARY ITEMS TO BE PROVIDED BY OWNER AND INSTALLED BY THE CONTRACTOR PER MANUFACTURERS' SPECIFICATIONS AND RECOMMENDATIONS.
11. VINYL SHEET PILES, PILE CAPS, AND TIE-BACK SYSTEM SHALL BE PROVIDED AND INSTALLED BY THE CONTRACTOR.
12. THESE DRAWINGS DO NOT INCLUDE NECESSARY ELEMENTS OF CONSTRUCTION SAFETY. ALL CONSTRUCTION, INCLUDING EXCAVATION, MUST BE COMPLETED IN ACCORDANCE WITH THE RULES AND REGULATIONS OF THE OCCUPATIONAL SAFETY AND HEALTH ACT, AND ALL FEDERAL, STATE AND LOCAL REQUIREMENTS. CONTRACTOR IS SOLELY RESPONSIBLE FOR ALL SITE SAFETY.
13. ORDINARY HIGH WATER MARK (OHW) ELEVATION SURVEYED BY CENTURY ENGINEERING, INC. IN OCTOBER 2019.
14. SEE STRUCTURAL DETAIL SHEETS FOR STRUCTURAL SPECIFICATIONS AND CONCRETE NOTES.

HIERARCHY OF CONTRACT DOCUMENTS:

ELEMENTS UNDER THIS CONTRACT SHALL BE CONSTRUCTED UTILIZING THE FOLLOWING INFORMATION IN THE HIERARCHY LISTED BELOW:

1. CONTRACT AGREEMENT BETWEEN OWNER AND CONTRACTOR.
2. APPROVED PLANS.
3. PROJECT MANUAL AND ENCLOSED TECHNICAL SPECIFICATIONS.
4. STATE OF DELAWARE DEPARTMENT OF NATURAL RESOURCES AND ENVIRONMENTAL CONTROL EROSION AND SEDIMENT CONTROL HANDBOOK, FEBRUARY 2019 OR MOST CURRENT AT DATE OF ADVERTISEMENT.
5. DELAWARE DEPARTMENT OF TRANSPORTATION STANDARD CONSTRUCTION DETAILS, 2018, OR MOST CURRENT AT ADVERTISEMENT.
6. DELAWARE DEPARTMENT OF TRANSPORTATION STANDARDS AND SPECIFICATIONS FOR BRIDGE AND ROAD CONSTRUCTION, 2016, OR MOST CURRENT AT DATE OF ADVERTISEMENT.

CONCRETE NOTES:

1. ALL CONCRETE WORK SHALL BE IN ACCORDANCE WITH ACI 301 – "SPECIFICATIONS FOR STRUCTURAL CONCRETE".
2. CONCRETE DESIGN MIXES/STRENGTHS SHALL HAVE A MINIMUM COMPRESSIVE STRENGTH OF F'c = 3,500 PSI, UNLESS STATED OTHERWISE. ALL CONCRETE SHALL CONTAIN A WATER-REDUCING ADMIXTURE. CALCIUM CHLORIDE IS PROHIBITED.
3. WELDED WIRE FABRIC SHALL BE SMOOTH OR DEFORMED AND CONFORM TO ASTM A1064 AND BE A MINIMUM WWF6X6-W1.4XW1.4 UNLESS OTHERWISE NOTED. ALL WELDED WIRE FABRIC SHALL BE SPLICED SO THAT THE OVERLAP OF THE OUTERMOST CROSS WIRES OF EACH ADJOINING SHEET IS NOT LESS THAN THE SPACING OF THE CROSS WIRES PLUS TWO INCHES.
4. REINFORCEMENT FABRIC SHALL BE INSTALLED AT A DEPTH OF 2/3 THE THICKNESS OF THE CONCRETE SECTION.
5. NO CONCRETE SHALL BE PLACED IN WATER OR ON FROZEN SUBGRADE.
6. THE REQUIRED AIR CONTENT FOR ALL CONCRETE SHALL BE 3% TO 7%.
7. SPACING OF SIDEWALK EXPANSION JOINTS SHALL BE 15'. SIDEWALK SHALL HAVE TOOL JOINTS EVERY 5'.

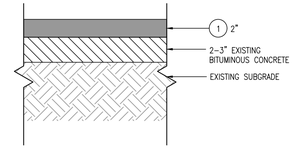

1 C101 TYPICAL SECTION - OVERLAY PAVEMENT
SCALE: NTS

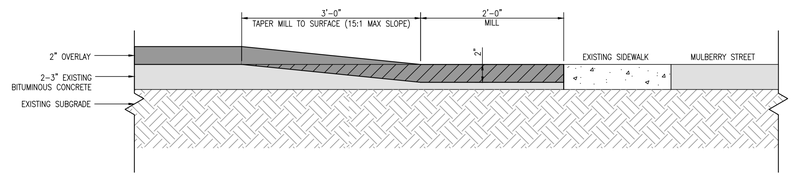

2 C101 ENTRANCE #1 BUTT JOINT DETAIL
SCALE: NTS

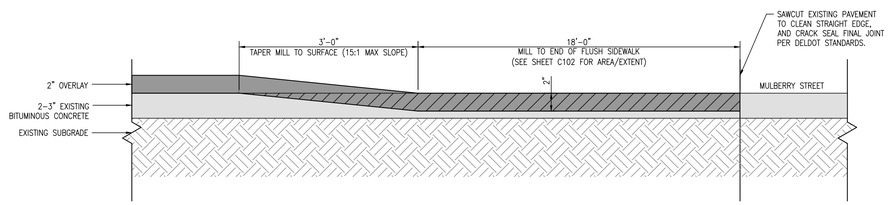

3 C101 ENTRANCE #2 BUTT JOINT DETAIL
SCALE: NTS

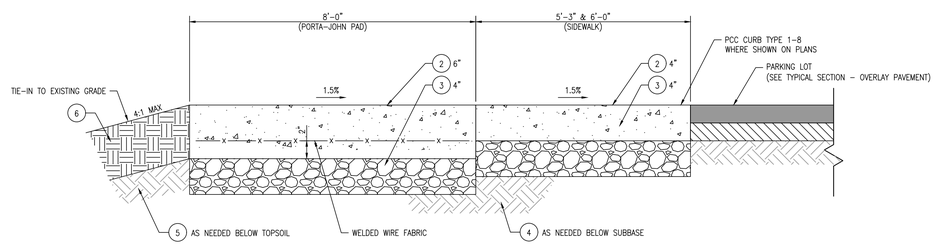

4 C101 TYPICAL SECTION - SIDEWALK & PORTABLE RESTROOM PAD
SCALE: NTS

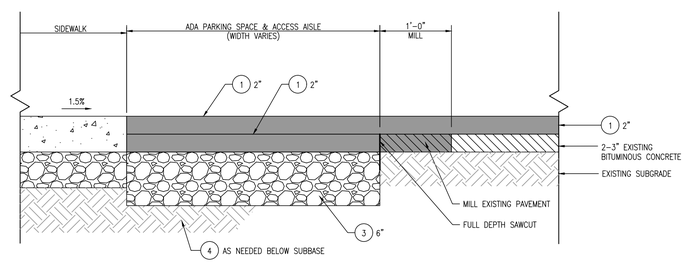

5 C101 TYPICAL SECTION - FULL DEPTH PAVEMENT
SCALE: NTS

LEGEND

	EXISTING	PROPOSED
PROPERTY LINE (PER STATE OF DE GIS)		N/A
PERMANENT EASEMENT	PE PE	N/A
RIGHT OF WAY	R/W R/W	N/A
CENTER LINE OF ROAD		N/A
BUILDING SETBACK		N/A
CONTOUR	10	10
OVERHEAD UTILITY	OH	N/A
WETLAND LINE		N/A
ORDINARY HIGH WATER MARK	OHW	N/A
FENCE		N/A
CONCRETE MONUMENT	C.M.	N/A
SIGN		
UTILITY POLE		N/A
DRAINAGE INLET	D.I.	N/A
DRAINAGE PIPE (RCP = REINFORCED CONCRETE PIPE) (CMP = CORRUGATED METAL PIPE)	RCP CMP	N/A
FULL DEPTH PAVEMENT	HOTMIX	
2" OVERLAY PAVEMENT	N/A	
P.C.C. CURB		
WOODEN BOLLARD		N/A
REMOVABLE BOLLARD	N/A	
CONCRETE AREA	CONC.	
RIPRAP		
TOPSOIL, SEED, & MULCH	N/A	
DE #3 STONE	N/A	
DE #57 STONE	N/A	
DOCK/PIER	N/A	
TIMBER SUPPORT PILE	N/A	
SHEET PILE	N/A	
LIMITS OF CONSTRUCTION	N/A	LOC LOC
LIMITS OF DISTURBANCE	N/A	LOD LOD
SILT FENCE	N/A	SF SF
STOCKPILE AREA	N/A	SP SP
TURBIDITY CURTAIN	N/A	TC
CONCRETE WASHOUT	N/A	CW
PORTABLE SEDIMENT TANK	N/A	ST
PUMPING PIT	N/A	PP-2
GRADE BREAKLINE		N/A
GUY WIRE		N/A
TREE		N/A
100-YR FLOOD PLAIN	FP	N/A
CAPPED REBAR	I.P.	N/A

IDENTIFIERS:

RM C – REMOVE BY CONTRACTOR
RL C – RELOCATE BY CONTRACTOR
RL O – RELOCATE BY OWNER

TYPICAL SECTION LEGEND:

1. SUPERPAVE TYPE C, PG 64-22, (ITEM NO. 401005)
2. P.C.C. SIDEWALK (ITEM NO. 705002)
3. GRADED AGGREGATE BASE COURSE, TYPE B, (ITEM NO. 301003)
4. BORROW, TYPE A, MAXIMUM 8" LIFTS, COMPACTION: 95% OF MAXIMUM DENSITY PER MODIFIED PROCTOR TEST (ITEM NO. 209001)
5. BORROW, TYPE F, MAXIMUM 8" LIFTS, COMPACTION: 95% OF MAXIMUM DENSITY PER MODIFIED PROCTOR TEST (ITEM NO. 209006)
6. 6" MINIMUM TOPSOIL (ITEM NO. 908002), PERMANENT SEED MIX (PER DNREC STANDARD DETAIL), AND MULCHING (PER DNREC STANDARD DETAIL)

NOTE: ALL ITEM NUMBERS REFERENCE DELDOT STANDARD SPECIFICATIONS/ITEMS.

ALEXANDER E. SCARDINO LICENSE No. 19139 DELAWARE PROFESSIONAL ENGINEER

This drawing is the property of Century Engineering, Inc. and is prepared for the exclusive use of its clients at the location indicated. No other use is authorized or intended.

CENTURY ENGINEERING, INC.
ADDRESS: 550 BAY ROAD DOVER, DE 19901
P: (302) 734-9188 F: (302) 734-4589
WEBSITE: www.centuryeng.com
EMAIL: ce@centuryeng.com

REVISIONS

ADDENDUM

DESCRIPTION	DATE

PROJECT
CONSTRUCTION PLANS
FOR
DELAWARE DIVISION OF FISH & WILDLIFE
WAGAMONS POND BOAT RAMP RECONSTRUCTION
BROADKILL HUNDRED, SUSSEX COUNTY, DELAWARE

SHEET TITLE
PROJECT NOTES & LEGEND

DIV. OF FISH AND WILDLIFE
100% SUBMISSION
MAY, 2020

DRAWN	CHK'D/DESIGNER
DFS/MDS	AES
SCALE	SHEET NO.
1" = 30'	C101
PROJECT NO. 175013.44	

G:\PROJECTS\1750\13.00 DNREC 2017 Engineering QC\1750\13.44 Wagamons Pond Boat Ramp\CADD FILES\Sheets\C101 - Notes & Legend.dwg, 5/5/2020 3:37 PM

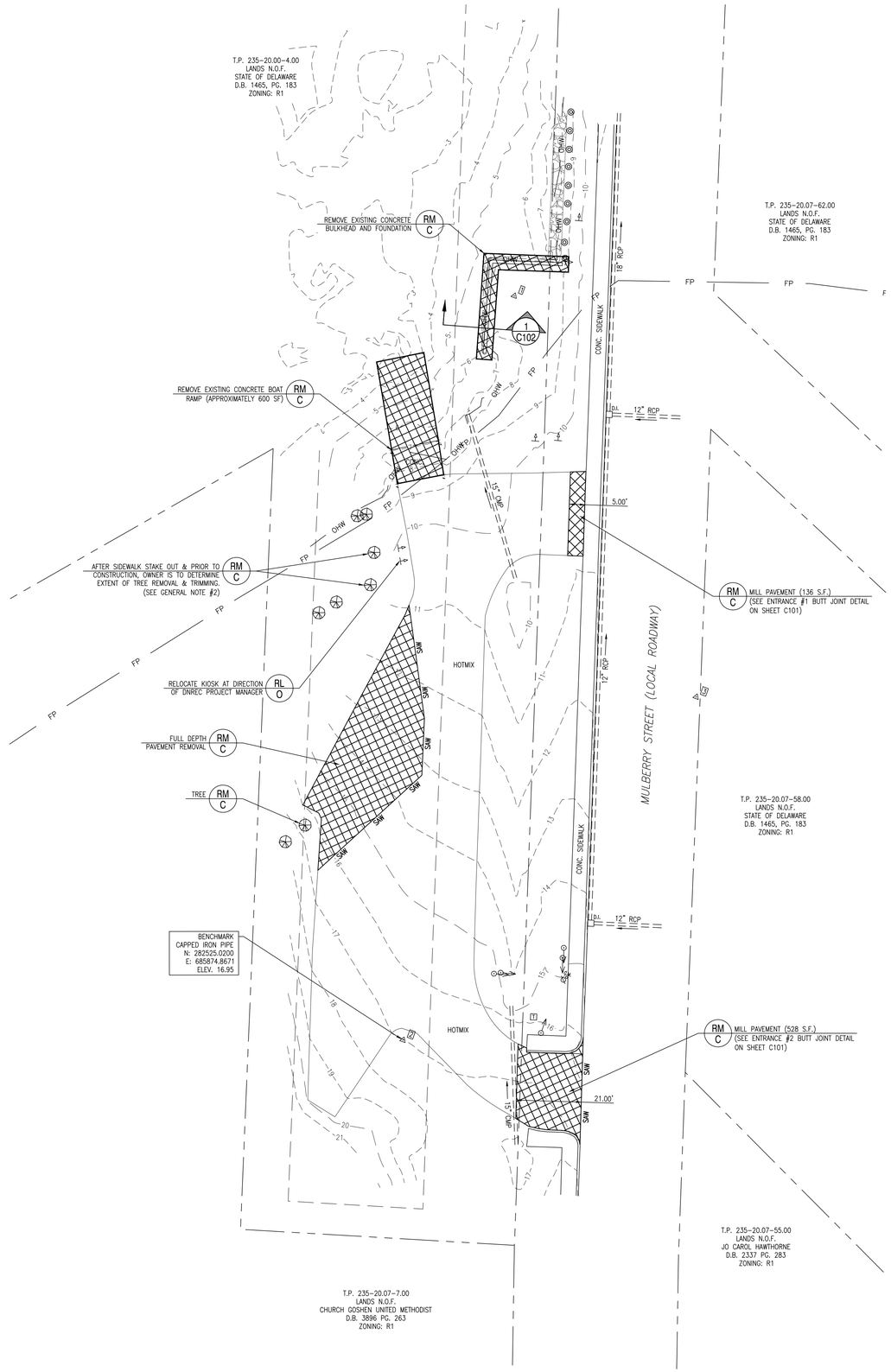

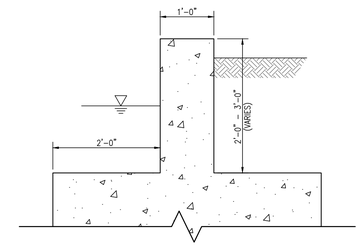

1 C102 APPROXIMATE EXISTING CONCRETE BULKHEAD SECTION
SCALE: NTS

LEGEND:

DEMOLITION

GENERAL NOTES:

1. ORDINARY HIGH WATER MARK ELEVATION WAS SURVEYED BY CENTURY ENGINEERING, INC. IN OCTOBER, 2019.
2. AS DIRECTED BY THE OWNER, AN ISA (INTERNATIONAL SOCIETY OF ARBORICULTURE) LICENSED ARBORIST SHALL BE EMPLOYED TO CONDUCT AN EVALUATION OF THE TREES TO BE TRIMMED IN ORDER TO PROVIDE RECOMMENDATION ON TRIMMING METHODS TO MINIMIZE POTENTIAL IMPACTS. THE CONTRACTOR SHALL FOLLOW RECOMMENDATIONS MADE BY THE ARBORIST TO SELECTIVELY TRIM LIMBS AS NEEDED.
3. ALL DEMOLISHED MATERIAL IS TO BECOME THE PROPERTY OF THE CONTRACTOR AND SHALL BE LEGALLY DISPOSED OF OFF SITE.
4. UNLESS OTHERWISE NOTED ON THIS SHEET, THE CONTRACTOR SHALL NOT DISTURB EXISTING INFRASTRUCTURE ON THE SITE INCLUDING, BUT NOT LIMITED TO, UTILITIES, DRAINAGE PIPES/INLETS, SIDEWALKS, TREES W/ DBH >4", AND SIGNAGE WITHOUT PRIOR APPROVAL FROM THE OWNER.
5. SEE CONSTRUCTION LAYOUT PLAN FOR SEQUENCE OF CONSTRUCTION AND EROSION & SEDIMENT CONTROL DEVICES.

ALEXANDER E. SCHMIDT LICENSE No. 16139 DELAWARE PROFESSIONAL ENGINEER

0 20' 40' 60'
SCALE: 1" = 20'

This drawing is the property of Century Engineering, Inc. and is prepared for the exclusive use of its clients at the location indicated. No other use is authorized or intended.

CENTURY ENGINEERING, INC.
ADDRESS: 550 BAY ROAD DOVER, DE 19901
P: (302) 734-9188 F: (302) 734-4589
WEBSITE: www.centuryeng.com
EMAIL: ce@centuryeng.com

REVISIONS

ADDENDUM

DESCRIPTION	DATE

PROJECT
CONSTRUCTION PLANS
FOR
DELAWARE DIVISION OF FISH & WILDLIFE
WAGAMONS POND BOAT RAMP RECONSTRUCTION
BROADKILL HUNDRED, SUSSEX COUNTY, DELAWARE

SHEET TITLE
EXISTING CONDITIONS

DIV. OF FISH AND WILDLIFE
100% SUBMISSION
MAY, 2020

DRAWN	CHK'D/DESIGNER
DFS/MDS	AES

SCALE: 1" = 20'
SHEET NO. C102
PROJECT NO. 175013.44

Q:\Projects\175013.00 (NWDC 2017 Engineering QE)\175013.44 (Wagamons Pond Boat Ramp)\CADD FILES\Sheets\C102 - Existing Conditions.dwg, 5/5/2020 12:10 PM

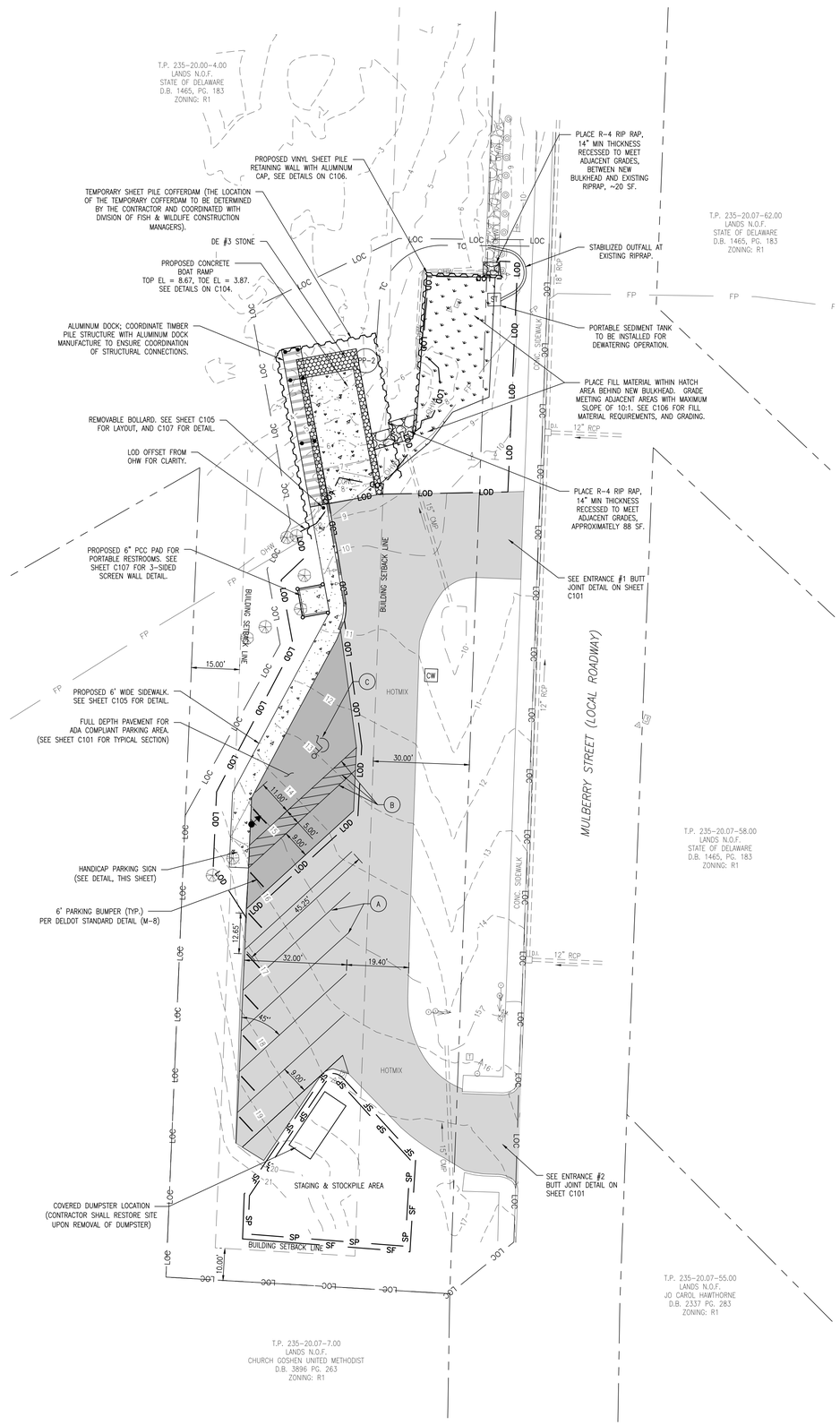

NOTES

1. ALL HOT MIX AREAS SHALL BE OVERLAID WITH 2" OF BITUMINOUS CONCRETE, SUPERPAVE, TYPE C (DELDOT ITEM NO. 401002). PROVIDE BUTT JOINT PER DELDOT STANDARD DETAIL P-3 AT LOCATIONS WHERE OVERLAY MEETS EXISTING HOTMIX OR CONCRETE. TAPER RATIO SHALL BE 15:1.
2. ALL PARCEL BOUNDARIES SHOWN ARE REFERENCED FROM STATE OF DELAWARE GIS DATA.
3. ALL DOCKS, HEADER CHANNELS, RAILING, AND ANCILLARY ITEMS SHALL BE PROVIDED BY THE OWNER. HEADER CHANNELS SHALL BE ORDERED ONE (1) FOOT WIDER THAN THE PLAN LENGTH AND CUT IN THE FIELD BY THE CONTRACTOR.

SEQUENCE OF CONSTRUCTION

1. PRIOR TO ANY CLEARING, INSTALLATION OF SEDIMENT CONTROL MEASURES, OR GRADING, A PRE-CONSTRUCTION MEETING MUST BE SCHEDULED AND CONDUCTED. THE LANDOWNER/DEVELOPER AND CONTRACTOR ARE REQUIRED TO BE IN ATTENDANCE AT THE PRE-CONSTRUCTION MEETING; THE DESIGNER IS RECOMMENDED TO ATTEND.
2. THE CONTRACTOR SHALL AT ALL TIMES PROTECT AGAINST SEDIMENT OR DEBRIS LADEN RUNOFF OR WIND FROM LEAVING THE SITE. PERIMETER CONTROLS SHOULD BE CHECKED DAILY AND ADJUSTED AND/OR REPAIRED TO FULLY CONTAIN AND CONTROL SEDIMENTATION ON THE SITE. ACCUMULATED SEDIMENT SHALL BE REMOVED WHEN IT HAS REACHED HALF OF THE EFFECTIVE CAPACITY OF THE CONTROL. IN ADDITION, THE CONTRACTOR MAY NEED TO ADJUST OR REPAIR MEASURES IN TIMES OF ADVERSE WEATHER CONDITIONS, OR AS DIRECTED BY THE AGENCY CONSTRUCTION SITE REVIEWER.
3. INSTALL TURBIDITY CURTAIN AND TEMPORARY SHEET PILE COFFERDAM.
4. INSTALL SITE POLLUTION PREVENTION DEVICES PER DNREC STANDARD DETAILS & SPECIFICATIONS, INCLUDING CONCRETE WASHOUT. INSTALL SUMP PIT AND PORTABLE SEDIMENT TANK FOR DEWATERING OPERATION AT THE BOAT RAMP.
5. CLEAR AREAS AS NEEDED WITHIN LOC. REMOVE EXISTING CONCRETE BOAT RAMP AND BULKHEAD.
6. INSTALL PERMANENT SHEET PILES FOR THE NEW BULKHEAD AND TIMBER SUPPORT PILES FOR THE FIXED DOCK.
7. PERFORM ROUGH GRADING AT THE PROPOSED BOAT RAMP AND PARK AREA NEAR THE NEW BULKHEAD.
8. PLACE STONE FOUNDATION AND CONCRETE FOR BOAT RAMP.
9. PLACE RIPRAP AS SHOWN NEAR THE VINYL SHEET PILES AND #3 STONE SURROUNDING CONCRETE RAMP.
10. INSTALL HEADER KITS ON TIMBER PILES FOR FIXED DOCK.
11. PAVE ALL AREAS TO BE OVERLAID.
12. PLACE ALUMINUM FIXED DOCK AND ALL ASSOCIATED COMPONENTS.
13. STRIPE ALL PAVED AREAS.
14. STABILIZE ALL UNPAVED DISTURBED AREAS WITH MINIMUM 6" TOPSOIL, DNREC APPROVED SEED MIX, AND MULCHING.
15. EROSION & SEDIMENT CONTROL DEVICES SHALL BE REMOVED ONLY AFTER WORK IN AN AREA HAS BEEN COMPLETED AND STABILIZED, WITH WRITTEN APPROVAL FROM THE OWNER.

PAVEMENT MARKINGS LEGEND (DELDOT SECTION 817)	
SYMBOL	ITEM
A	4" SOLID WHITE ALKYD PAVEMENT STRIPING
B	4" SOLID BLUE ALKYD PAVEMENT STRIPING
C	BLUE LATEX PAINT SYMBOL/LEGEND

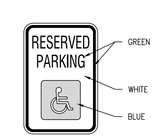

HANDICAP PARKING SIGN DETIAL

SCALE: N.T.S.

0 20' 40' 60'

SCALE: 1" = 20'

This drawing is the property of Century Engineering, Inc. and is prepared for the exclusive use of its clients at the location indicated. No other use is authorized or intended.

CENTURY ENGINEERING, INC.
ADDRESS: 550 BAY ROAD DOVER, DE 19901
P: (302) 734-9188 F: (302) 734-4589
WEBSITE: www.centuryeng.com
EMAIL: ce@centuryeng.com

REVISIONS

ADDENDUM

DESCRIPTION	DATE

PROJECT

CONSTRUCTION PLANS
FOR
DELAWARE DIVISION OF FISH & WILDLIFE
WAGAMONS POND BOAT RAMP RECONSTRUCTION
BROADKILL HUNDRED, SUSSEX COUNTY, DELAWARE

SHEET TITLE

SITE PLAN

DIV. OF FISH AND WILDLIFE
100% SUBMISSION
MAY, 2020

DRAWN	CHK'D/DESIGNER
DFS/MDS	AES
SCALE	SHEET NO.
1" = 20'	C103
PROJECT NO. 175013.44	

G:\Projects\175013.00_DNREC 2017 Engineering (AE)\175013.44 (Wagamons Pond Boat Ramp)\CADD FILES\Sheets\C103 - Site Plan.dwg, 5/5/2020 12:10 PM

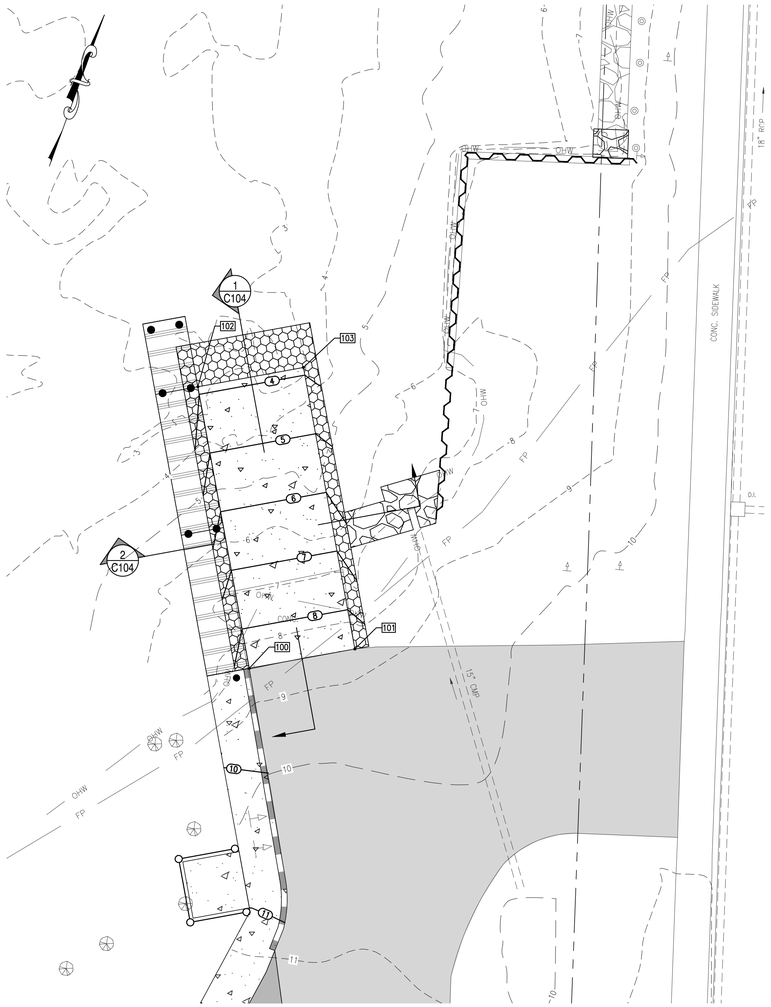

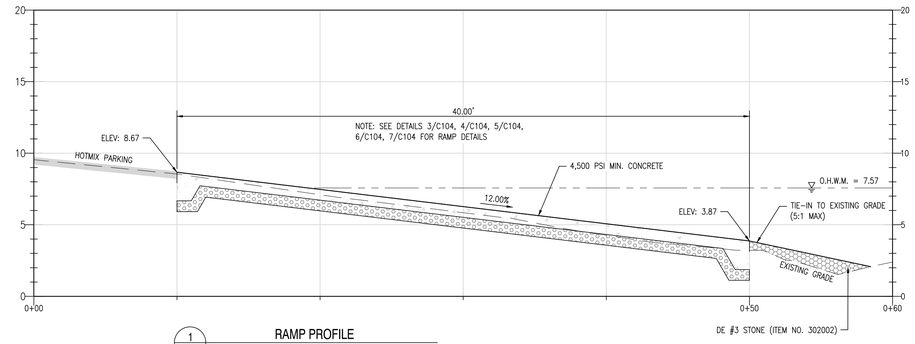

1 C104 RAMP PROFILE
SCALE: 1" = 5'

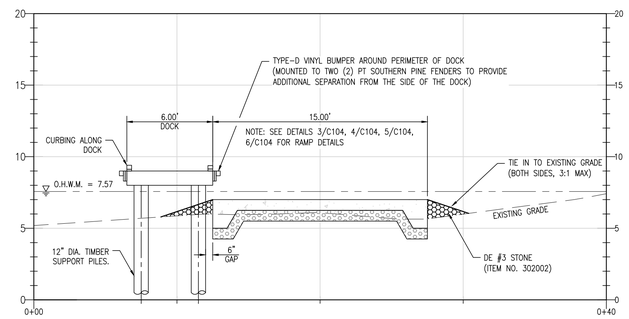

2 C104 RAMP & FIXED DOCK
SCALE: 1" = 5'

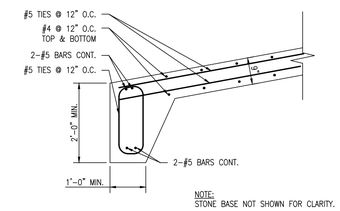

NOTE:
STONE BASE NOT SHOWN FOR CLARITY.

5 C104 LOWER RAMP TOE DETAIL
SCALE: 1/2" = 1'-0"

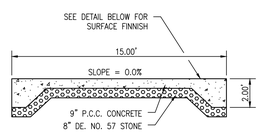

NOTE: REBAR OMITTED FOR CLARITY.

3 C104 RAMP TYPICAL SECTION
SCALE: 1" = 5'

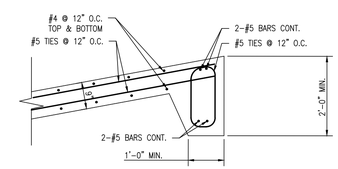

6 C104 UPPER RAMP TURNDOWN DETAIL
SCALE: 1/2" = 1'-0"

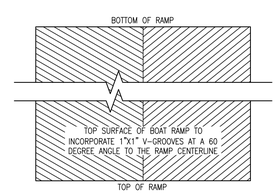

4 C104 RAMP SURFACE FINISH
SCALE: 1" = 5'

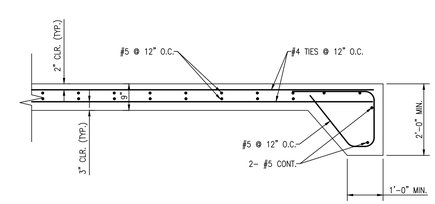

7 C104 LONGITUDINAL EDGE DETAIL
SCALE: 1/2" = 1'-0"

RAMP LAYOUT			
POINT NO.	NORTHING	EASTING	ELEVATION
100	282693.7866	685811.7132	8.67
101	282701.3664	685824.6572	8.67
102	282728.3039	685791.5004	3.87
103	282735.8837	685804.4444	3.87

GENERAL NOTES:

1. SEE STRUCTURAL NOTES ON SHEET C106 FOR CONCRETE SPECIFICATIONS.

This drawing is the property of Century Engineering, Inc. and is prepared for the exclusive use of its clients at the location indicated. No other use is authorized or intended.

CENTURY ENGINEERING, INC.
ADDRESS: 550 BAY ROAD DOVER, DE 19901
P: (302) 734-9188 F: (302) 734-4589
WEBSITE: www.centuryeng.com
EMAIL: ce@centuryeng.com

REVISIONS

ADDENDUM

DESCRIPTION	DATE

PROJECT
CONSTRUCTION PLANS
FOR
DELAWARE DIVISION OF FISH & WILDLIFE
WAGAMONS POND BOAT RAMP RECONSTRUCTION
BROADKILL HUNDRED, SUSSEX COUNTY, DELAWARE

SHEET TITLE
BOAT RAMP DETAILS

DIV. OF FISH AND WILDLIFE
100% SUBMISSION
MAY, 2020

DRAWN	CHK'D/DESIGNER
DFS/MDS	AES
SCALE	SHEET NO.
AS NOTED	C104
PROJECT NO. 175013.44	

ALEXANDER E. SCHMIDT LICENSE No. 16439 DELAWARE PROFESSIONAL ENGINEER

G:\Projects\175013.00 (DNREC 2017 Engineering Qt)\175013.44 (Wagamons Pond Boat Ramp)\CADD FILES\Sheets\C104 - Boat Ramp Details.dwg, 5/5/2020 12:10 PM

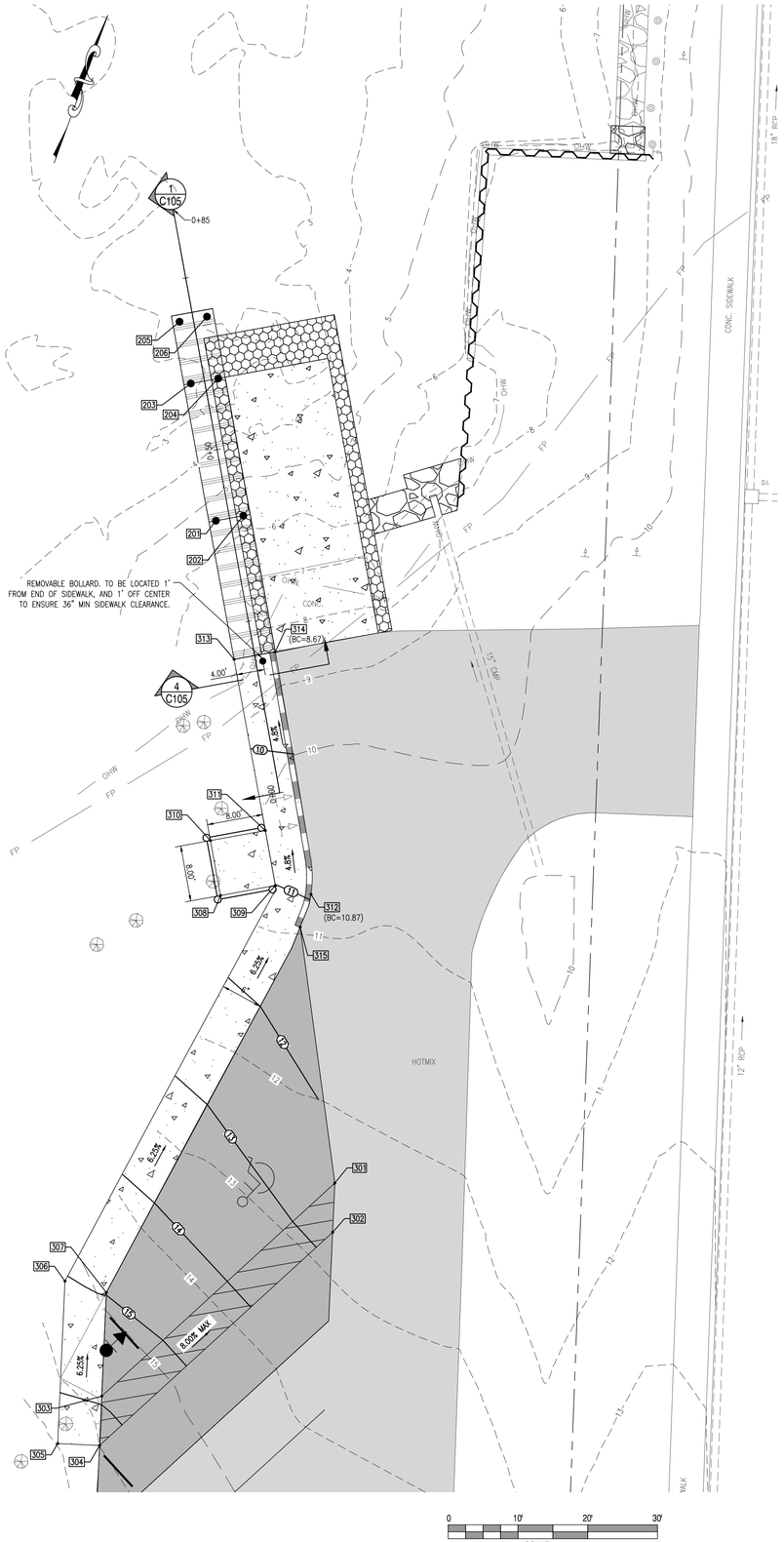

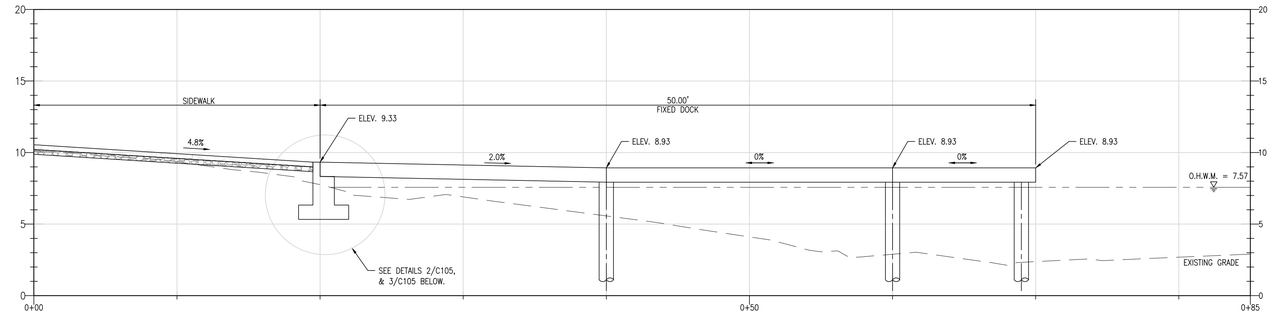

1/C105 FIXED DOCK PROFILE
SCALE: 1" = 5'

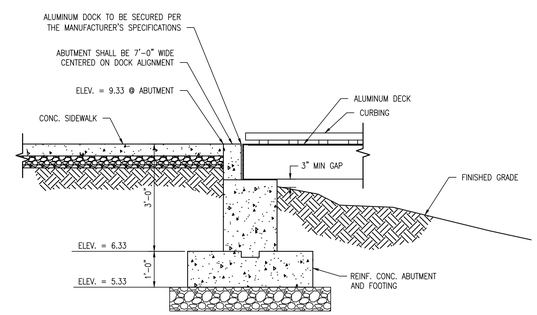

2/C105 DOCK, ABUTMENT, & SIDEWALK INTERFACE
SCALE: 1/2" = 1'

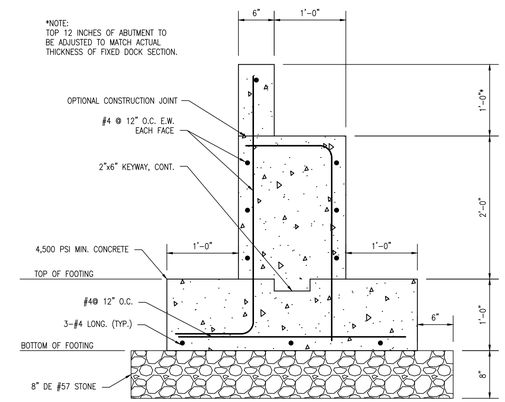

3/C105 DOCK ABUTMENT
SCALE: 1" = 1'

NOTE:
CURB HEIGHT VARIES, 8" MAX REVEAL.

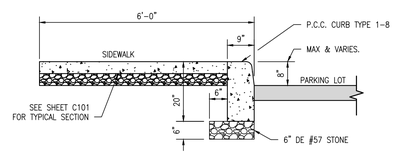

4/C105 SIDEWALK CURB DETAIL
SCALE: 1/2" = 1'

SIDEWALK & CONC. PAD LAYOUT				
POINT NO.	NORTHING	EASTING	ELEVATION	
301	282625.1574	685845.7727	12.47	
302	282618.4113	685847.8915	12.79	
303	282585.0391	685824.8317	15.95	
304	282578.2930	685826.9506	16.25	
305	282576.4951	685821.2263	16.34	
306	282598.7255	685814.2442	15.04	
307	282599.2245	685820.3764	14.95	
308	282658.2796	685816.2818	11.12	
309	282662.3221	685823.1853	11.00	
310	282665.1830	685812.2393	10.69	
311	282669.2256	685819.1427	10.57	
312	282662.8823	685828.4095	10.95	
313	282690.7547	685806.5356	9.33	
314	282693.7866	685811.7132	9.33	(CURB START)
315	282657.9246	685828.5609	11.22	(CURB END)

NOTE: B.C. REPRESENTS FLOWLINE OF CURB.

TIMBER SUPPORT PILE LAYOUT						
POINT NO.	NORTHING	EASTING	TOP ELEV.*	EST. TIP ELEV.	MIN. EMBEDMENT***	PILE LENGTH** (FT)
201	282708.5186	685797.2922	7.93'	-21.0	25.0	35
202	282710.5399	685800.7439	7.93'	-20.5	25.0	35
203	282725.7773	685787.1858	7.93'	-23.0	25.0	35
204	282727.7986	685790.6375	7.93'	-23.0	25.0	35
205	282733.5437	685782.6379	7.93'	-23.0	25.0	35
206	282735.5650	685786.0896	7.93'	-23.0	25.0	35

* NOTE: CONTRACTOR SHALL VERIFY THE TOP OF PILE ELEVATIONS WITH THE FIELD CONDITIONS AND DOCK MANUFACTURER DESIGN REQUIREMENTS.

** NOTE: PILE LENGTH COLUMN INDICATES MINIMUM PILE LENGTH TO BE ORDERED BY THE CONTRACTOR. CONTRACTOR SHALL INSTALL PILE TO MEET MINIMUM EMBEDMENT AND ULTIMATE BEARING CAPACITY REQUIREMENTS. EXCESS PILE LENGTHS SHALL BE TRIMMED AS NEEDED.

*** NOTE: IF A VIBRATORY HAMMER IS USED IN-LIEU OF AN IMPACT HAMMER, AN ADDITIONAL FIVE (5) FEET OF EMBEDMENT SHALL BE REQUIRED. ADDITIONAL PILE LENGTH MAY BE ORDERED AT THE CONTRACTOR'S DISCRETION AND EXPENSE TO ENSURE EMBEDMENT CRITERIA IS SATISFIED WHEN USING A VIBRATORY HAMMER.

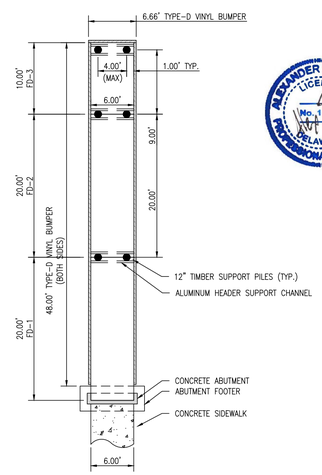

5/C105 FIXED DOCK PLAN VIEW
SCALE: 1" = 10'

GENERAL NOTES:

1. SEE STRUCTURAL NOTES ON SHEET C106 FOR CONCRETE SPECIFICATIONS.

FIXED DOCK NOTES:

1. FINAL DOCK CONFIGURATION TO BE CONFIRMED WITH OWNER.
2. DOCK DIMENSIONS SHOWN ARE NOMINAL FROM ALUMINUM TO ALUMINUM FRAME. FINAL FINISHED DIMENSIONS WILL VARY ACCORDING TO INSTALLED FENDERS & BUMPERS.
3. TOP AND TIP ELEVATIONS OF TIMBER SUPPORT PILES FOR FIXED DOCK PROVIDED ON THIS SHEET.
4. ALL DOCKS, HEADER CHANNELS, RAILING, AND ANCILLARY ITEMS SHALL BE PROVIDED BY THE OWNER. HEADER CHANNELS SHALL BE ORDERED ONE (1) FOOT WIDER THAN THE PLAN LENGTH AND CUT IN THE FIELD BY THE CONTRACTOR.
5. FIXED DOCK SUPPORT PILES SHALL BE DRIVEN TO MINIMUM ULTIMATE BEARING CAPACITY OF 10 KIPS (AS DETERMINED BY THE ENGINEER) WHILE ALSO MEETING MINIMUM EMBEDMENT REQUIREMENTS.
6. WOOD PILES, CLASS B, SOUTHERN PINE MEETING REQUIREMENTS OF ASTM D25. PRESSURE IMPREGNATE WITH CHROMATED COPPER ARSENATE (CCA) IN ACCORDANCE WITH AMERICAN WOOD PRESERVERS ASSOCIATION (AWPA) STANDARD C3.
7. SEE MANUFACTURER'S SHOP DRAWINGS FOR ADDITIONAL ALUMINUM DOCK DETAILS.
8. REFER TO STRUCTURAL DETAILS FOR TIMBER PILE INSTALLATION NOTES.

This drawing is the property of Century Engineering, Inc. and is prepared for the exclusive use of its clients at the location indicated. No other use is authorized or intended.

CENTURY ENGINEERING, INC.
ADDRESS: 550 BAY ROAD DOVER, DE 19901
P: (302) 734-9188 F: (302) 734-4589
WEBSITE: www.centuryeng.com
EMAIL: ce@centuryeng.com

REVISIONS

ADDENDUM

DESCRIPTION	DATE

PROJECT
CONSTRUCTION PLANS
FOR
DELAWARE DIVISION OF FISH & WILDLIFE
WAGAMONS POND BOAT RAMP RECONSTRUCTION
BROADKILL HUNDRED, SUSSEX COUNTY, DELAWARE

SHEET TITLE
FIXED DOCK & SIDEWALK DETAILS

DIV. OF FISH AND WILDLIFE
100% SUBMISSION
MAY, 2020

DRAWN: DFS/MDS
CHK'D/DESIGNER: AES
SCALE: AS NOTED
SHEET NO.: C105
PROJECT NO. 175013.44

G:\Projects\175013.00 (NMEC 2017 Engineering 007)\175013.44 (Wagamons Pond Boat Ramp)\CADD FILES\Sheet\C105 - Fixed Dock Details.dwg, 5/5/2020 12:10 PM

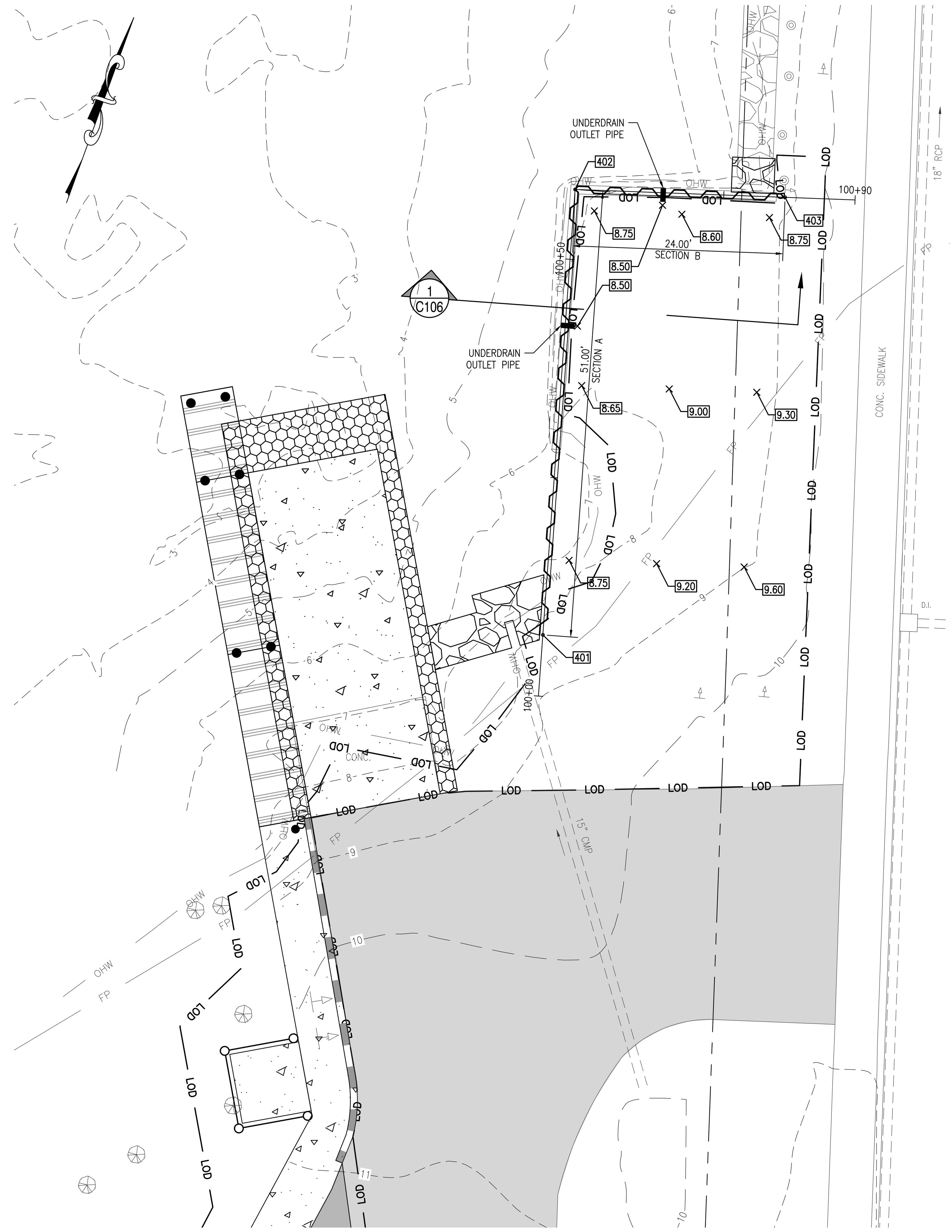

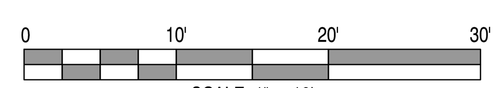

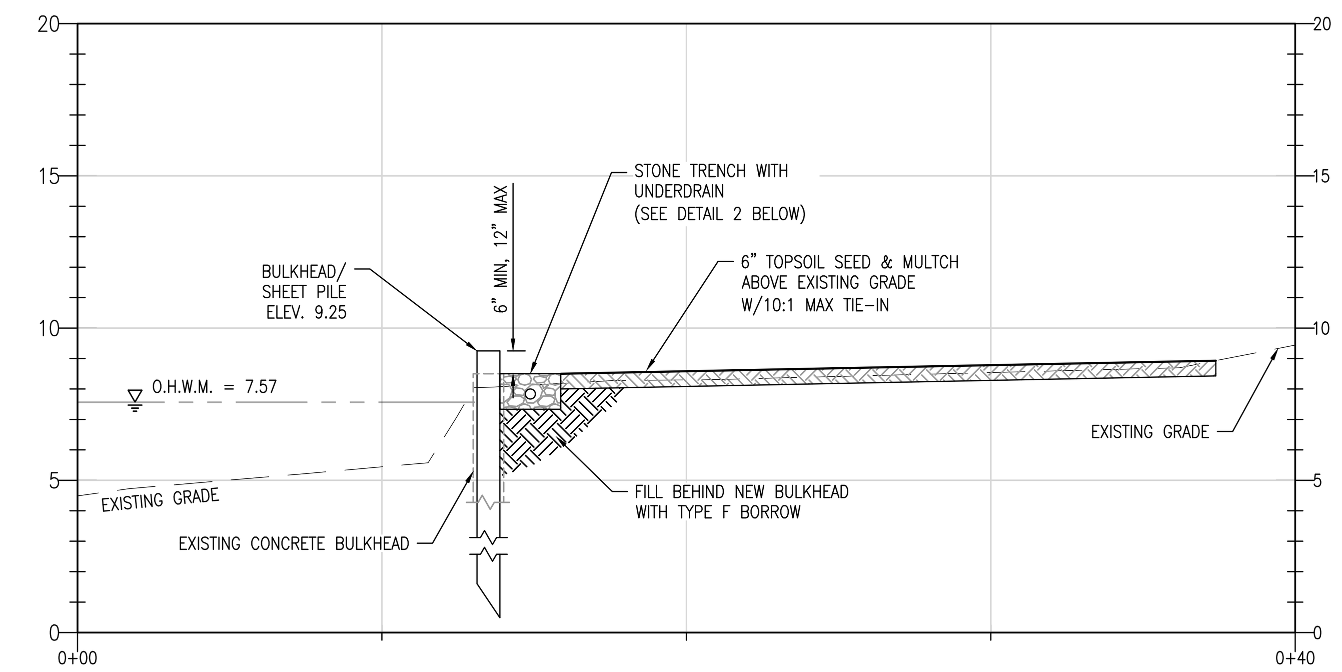

1 C106 RETAINING WALL

SCALE: 1" = 5'

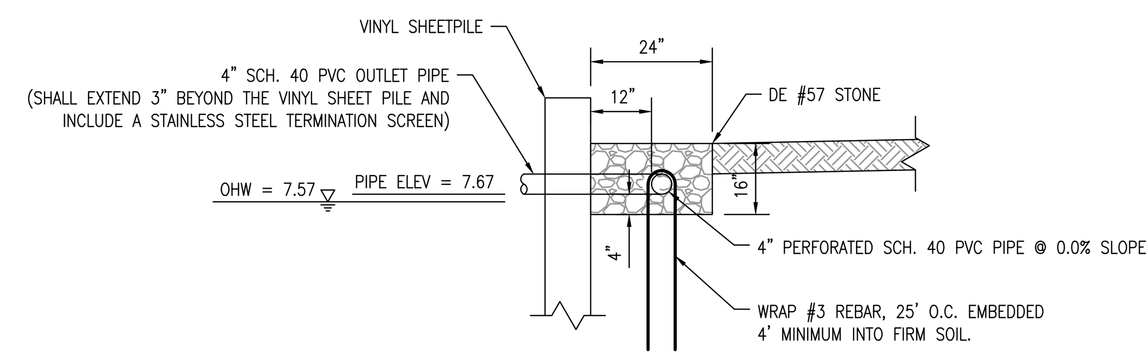

2 C106 STONE TRENCH WITH UNDERDRAIN

SCALE: NTS

SHEET PILE LAYOUT		
POINT NO.	NORTHING	EASTING
401	282722.4224	685829.4678
402	282771.4803	685815.5277
403	282778.8341	685838.3733

SHEET PILE DRIVING SCHEDULE

SECTION	CAP	TOP ELEVATION	MIN. TIP ELEVATION	MIN. EMBEDMENT	MINIMUM ORDER LENGTH
A	YES	9.25	−5.75	10.5	15.0'
B	YES	9.25	−5.75	10.5	15.0'

STRUCTURAL NOTES:

DESIGN AND CONSTRUCTION SPECIFICATIONS:

1. LOADS:
   1.1. LIVE LOAD – FIXED DOCKS: 40 POUNDS PER SQUARE FOOT WITH A MAXIMUM DEFLECTION OF L/180.

2. MATERIALS:
   2.1. VINYL:
   2.2.1. ALL STRUCTURAL VINYL SHALL BE WEATHERABLE RIGID VINYL.
   2.2.2. SEE PROJECT MANUAL FOR ADDITIONAL STRUCTURAL VINYL SPECIFICATIONS.
   2.2.3. VINYL SHEET PILES SHALL INCLUDE VINYL CAPS PROVIDED BY THE SHEET PILE MANUFACTURER.
   2.2.4. COLOR OF ALL VINYL TO BE "CLAY".

   2.3. ALUMINUM:
   2.3.1. ALL STRUCTURAL ALUMINUM SHALL BE 6063–T6 MARINE GRADE ALUMINUM.

   2.4. REINFORCING STEEL:
   2.4.1. ALL REINFORCING STEEL SHALL BE AASHTO M31, (ASTM A615), GRADE 60.
   2.4.2. ALL REINFORCING STEEL SHALL BE EPOXY COATED IN ACCORDANCE WITH AASHTO M284.

   2.5. TIMBER:
   2.5.1. PILES SHALL BE CLASS B SOUTHERN YELLOW PINE IN ACCORDANCE WITH ASTM D25.
   2.5.2. DIMENSION LUMBER SHALL BE SOUTHERN YELLOW PINE, NO. 2 OR BETTER.
   2.5.3. ALL PILES AND DIMENSION LUMBER SHALL BE TREATED WITH CHROMATED COPPER ARSENATE (CCA) WITH A MINIMUM RETENTION OF 2.5 POUNDS PER CUBIC FOOT.

   2.6. CONCRETE:
   2.6.1. ALL EXPOSED CONCRETE PAD EDGES SHALL HAVE A 1" CHAMFER.
   2.6.2. AN OPTIONAL TRANSVERSE CONSTRUCTION JOINT MAY BE PLACED AT THE MID–SPAN OF THE BOAT RAMP AS SHOWN.
   2.6.3. ALL CONCRETE WORK SHALL BE IN ACCORDANCE WITH SECTION 610 OF THE DELDOT STANDARD SPECIFICATIONS FOR ROAD AND BRIDGE CONSTRUCTION (DATED AUGUST 2016) UNLESS OTHERWISE NOTED.
   2.6.4. SUBMIT CONCRETE MIX DESIGNS FOR REVIEW AND APPROVAL PRIOR TO STARTING WORK. ALL CONCRETE SHALL USE A DELDOT APPROVED MIX.
   2.6.5. CONCRETE DESIGN MIXES/STRENGTHS SHALL HAVE A MINIMUM COMPRESSIVE STRENGTH OF F'C = 4,500 PSI. ALL CONCRETE SHALL CONTAIN A WATER–REDUCING ADMIXTURE. CALCIUM CHLORIDE IS PROHIBITED.
   2.6.6. CONCRETE FOR RAMP SHALL BE DELDOT CLASS A (F'C = 4,500 PSI) AND SHALL CONFORM TO SECTION 610004 – PORTLAND CEMENT MASONRY, ABUTMENT ABOVE FOOTING, CLASS A.
   2.6.7. UNLESS OTHERWISE SHOWN, CONCRETE COVER OVER REINFORCEMENT SHALL BE 1" FOR INTERIOR FACE OF WALLS NOT EXPOSED TO EARTH, 2" FOR EXTERIOR FACE OF WALLS, 3" FOR FOOTINGS AND OTHER STRUCTURAL CONCRETE DEPOSITED AGAINST GROUND, 2" FOR CONCRETE PERMANENTLY EXPOSED TO EARTH OR WEATHER, AND 0.75" FOR SLABS.
   2.6.8. NO CONCRETE SHALL BE PLACED IN WATER OR ON FROZEN SUBGRADE.
   2.6.9. THE REQUIRED AIR CONTENT FOR ALL CONCRETE SHALL BETWEEN 3% AND 7%.
   2.6.10. PROOF ROLL SUBGRADES FOR PAVED AREAS UNDER THE DIRECTION OF THE INSPECTION AGENCY. REMOVE ALL UNSUITABLE AREAS AND REPLACE WITH COMPACTED STRUCTURAL FILL MATERIALS. PLACE FILL IN 6" LIFTS AND COMPACT FILL TO AT LEAST 95% OF THE MAXIMUM DENSITY AS DETERMINED BY THE ASTM D1557 MODIFIED PROCTOR TEST. FILL MATERIAL SHALL BE SM OR BETTER AS CLASSIFIED PER ASTM D2487.
   2.6.11. CONCRETE SHALL BE POURED WITHIN 24 HOURS OF EXCAVATION UNLESS APPROVED BY THE ENGINEER.

3. CONNECTIONS:
   3.1. ALL BOLTS AND NAILS SHALL BE HOT–DIPPED GALVANIZED IN ACCORDANCE WITH ASTM A153, AASHTO M232 OR STAINLESS STEEL IN ACCORDANCE WITH ASTM A316, AS SHOWN ON THE PLANS.
   3.2. BOLTED CONNECTIONS THAT ARE EXPOSED TO PEDESTRIANS SHALL BE POSITIONED SUCH THAT THE BOLT HEADS FACE THE DECK AND NUTS FACE AWAY FROM THE THE PUBLIC.

4. CONTRACTOR SHALL PROVIDE DEWATERING SYSTEM AS NECESSARY FOR CONSTRUCTION OF BOAT RAMP AND FIXED DOCK. CONTRACTOR SHALL OBTAIN ANY NECESSARY DEWATERING PERMITS. DEWATERING SYSTEM SHALL BE INCIDENTAL TO THE CONTRACT.

5. ALL DOCK HARDWARE IS TO BE STAINLESS STEEL, SERIES 304.

6. ALL DOCKS, HEADER CHANNELS, CURBING, AND ANCILLARY ITEMS SHALL BE PROVIDED BY THE OWNER AND INSTALLED BY THE CONTRACTOR. THE CONTRACTOR SHALL BE RESPONSIBLE FOR ACCEPTING THE DELIVERY AS WELL AS THE STORAGE AND HANDLING OF DOCK ITEMS.

7. ALL SHEET PILE MATERIALS INCLUDING SHEETING, CORNERS, CAPS, AND FASTENERS SHALL BE PROVIDED BY THE CONTRACTOR. SEE PROJECT MANUAL FOR VINYL SHEET PILE AND VINYL CAP SPECIFICATIONS.

8. THE NOTES ON THESE DRAWINGS ARE NOT INTENDED TO REPLACE SPECIFICATIONS. SEE SPECIFICATIONS FOR REQUIREMENTS IN ADDITION TO GENERAL NOTES. FOR INCONSISTENCIES BETWEEN THESE DRAWINGS AND THE SPECIFICATIONS, THE STRICTER REQUIREMENT SHALL APPLY, AND THE ENGINEER SHALL BE NOTIFIED PRIOR TO PROCEEDIN6 WITH THE AFFECTED PORTION OF THE WORK.

9. THE STRUCTURE IS DESIGNED TO BE SELF SUPPORTING AND STABLE AFTER THE CONSTRUCTION IS COMPLETE. IT IS THE CONTRACTOR'S SOLE RESPONSIBILITY TO DETERMINE ERECTION PROCEDURES AND SEQUENCE TO ENSURE THE SAFETY OF THE STRUCTURE AND ITS COMPONENTS DURING ERECTION. THIS INCLUDES, BUT IS NOT LIMITED TO, THE ADDITION OF NECESSARY SHORING, SHEETING, TEMPORARY BRACING, GUYS OR TIE DOWNS. PROVIDE ALL SHORING AND BRACING REQUIRED TO STABILIZE AND PROTECT EXISTING AND ADJACENT STRUCTURES AND SYSTEMS DURING COURSE OF DEMOLITION AND CONSTRUCTION. SUCH MATERIAL SHALL REMAIN THE PROPERTY OF THE CONTRACTOR AFTER COMPLETION OF THE PROJECT.

10. SECTIONS AND DETAILS SHOWN ON ANY STRUCTURAL DRAWINGS SHALL BE CONSIDERED TYPICAL FOR SIMILAR CONDITIONS.

11. ALL APPLICABLE FEDERAL, STATE AND MUNICIPAL REGULATIONS SHALL BE FOLLOWED, INCLUDING THE FEDERAL DEPARTMENT OF LABOR OCCUPATIONAL SAFETY AND HEALTH ACT.

12. ANY AND ALL MODIFICATIONS TO THE STRUCTURAL ELEMENTS INDICATED ON THESE DRAWINGS MUST BE APPROVED IN ADVANCE BY THE ENGINEER.

PILE INSTALLATION NOTES:

1. FULL TIME INSPECTION OF THE PILE INSTALLATION SHALL BE PROVIDED BY OWNER AND PERFORMED BY AN ENGINEER OR EXPERIENCED FOUNDATION INSPECTOR REGISTERED AS A PROFESSIONAL ENGINEER IN THE STATE OF DELAWARE TO ESTABLISH AN ACCURATE RECORD OF PILE DRIVING. INSPECTION SHOULD VERIFY THAT SUITABLE PILES ARE BEING INSTALLED. RECORDS SHALL INCLUDE PROJECT NAME AND NUMBER, NAME OF CONTRACTOR, PILE LOCATION AND NUMBER, COMPUTED PILE CAPACITY, TYPE AND SIZE OF HAMMER USED, TYPE OF PILE DRIVING CAP USED, RATE OF OPERATION OF PILE DRIVING EQUIPMENT, PILE DIMENSIONS, ELEVATION OF TIP, ELEVATION OF BUTT BEFORE AND AFTER CUT–OFF, GROUND ELEVATION, CONTINUOUS RECORD OF NUMBER OF BLOWS FOR EACH FOOT OF PENETRATION, PLUMBNESS, HORIZONTAL LOCATION, PILE UPLIFT AND ANY UNUSUAL OCCURRENCES DURING PILE DRIVING.

2. ALL TIMBER SUPPORT PILES SHALL BE DRIVEN IN THE LOCATIONS SHOWN ON THE PLANS WITHIN THE FOLLOWING TOLERANCES. DEVIATION OF THE LOCATION OF THE TOP OF A PILE FROM THAT SHOWN ON PLANS SHALL NOT EXCEED 2 INCHES AFTER INITIAL DRIVING, AND 4 INCHES AFTER DRIVING IS COMPLETED. PILES SHALL BE DRIVEN WITH A MAXIMUM DEVIATION FROM VERTICAL OF 1 INCH IN 48 INCHES OF PILE LENGTH.

3. ALL SHEET PILES FOR THE PROPOSED RETAINING WALL SHALL BE DRIVEN IN THE LOCATIONS SHOWN ON THE PLAN WITHIN THE FOLLOWING TOLERANCES. HORIZONTAL DEVIATION OF ANY POINT FROM A STRAIGHT LINE CONNECTING THE TWO ENDS OF THE WALL SECTION SHALL BE A MAXIMUM OF 6 INCHES. THE LOCATION OF THE TOP OF A PILE FROM THAT SHOWN ON PLANS SHALL NOT EXCEED 2 INCHES AFTER INITIAL DRIVING, AND 4 INCHES AFTER DRIVING IS COMPLETED. PILES SHALL BE DRIVEN WITH A MAXIMUM DEVIATION FROM VERTICAL OF 2% OF ANY VERTICAL LENGTH, OR A MAXIMUM OF 4 INCHES. TOP OF CAP ELEVATIONS SHALL BE WITHIN 1 INCH OF PLAN ELEVATIONS.

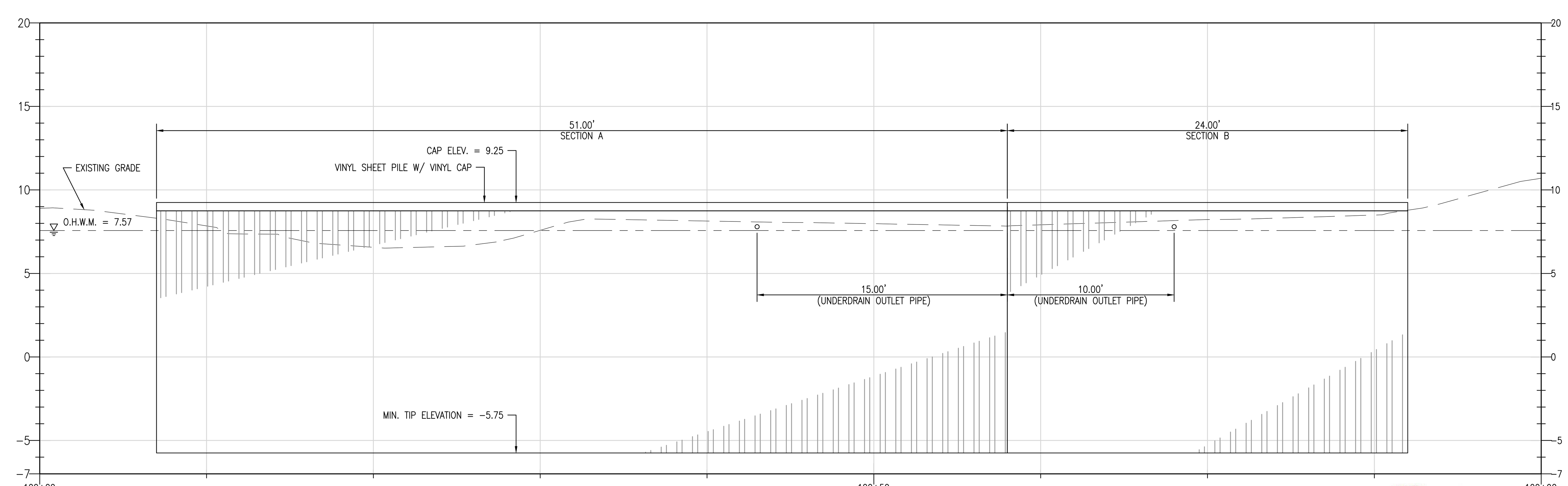

2 C106 SHEET PILE PROFILE

SCALE: 1" = 5'

This drawing is the property of Century Engineering, Inc. and is prepared for the exclusive use of its clients at the location indicated. No other use is authorized or intended.

CENTURY ENGINEERING, INC.
ADDRESS: 550 BAY ROAD DOVER, DE 19901 P: (302) 734-9188 F: (302) 734-4589
WEBSITE: www.centuryeng.com
EMAIL: cei@centuryeng.com

REVISIONS

ADDENDUM

DESCRIPTION DATE

PROJECT

CONSTRUCTION PLANS FOR DELAWARE DIVISION OF FISH & WILDLIFE WAGAMONS POND BOAT RAMP RECONSTRUCTION BROADKILL HUNDRED, SUSSEX COUNTY, DELAWARE

SHEET TITLE

STRUCTURAL DETAILS

DIV. OF FISH AND WILDLIFE 100% SUBMISSION

MAY, 2020

DRAWN	CHK'D/DESIGNER
DFS/MDS	AES
SCALE	SHEET NO.
AS NOTED	C106
PROJECT NO. 175013.44	

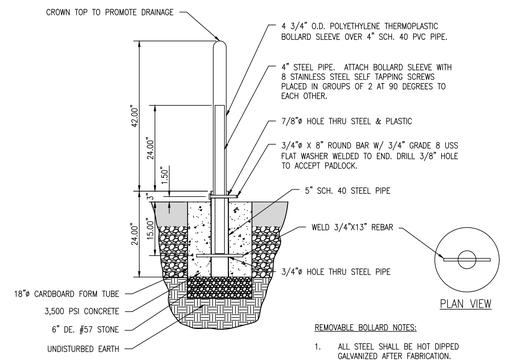

REMOVABLE BOLLARD NOTES:

1. ALL STEEL SHALL BE HOT DIPPED GALVANIZED AFTER FABRICATION.

1 / C107 REMOVABLE PIPE BOLLARD DETAIL
SCALE: NTS

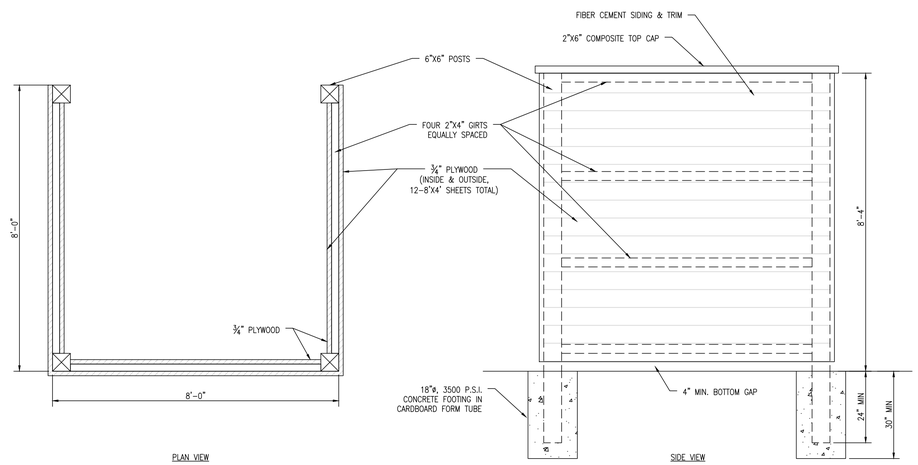

NOTE:

1. ALL WOOD SHALL BE PRESSURE TREATED.
2. FIBER CEMENT SIDING & TRIM. 6" EXPOSURE LAP SIDING, 1"X4" TRIM. TO BE INSTALLED PER MANUFACTURE RECOMMENDATION (INCLUDING CAULKING EDGES).
3. STRUCTURE TO BE PAINTED THE FOLLOWING COLORS:

   6"X6" POSTS, FIBER CEMENT SIDING, & PLYWOOD:
   SHERWIN WILLIAMS PORT-POTTY MAIN

COLORANT	OZ	32	64	128
B1-BLACK	–	19	–	1
G2-NEW GREEN	–	28	1	1
R2-MAROON	4	29	1	–
Y3-DEEP GOLD	2	49	1	1

   TOP CAP & TRIM:
   SHERWIN WILLIAMS PORT-POTTY TRIM

COLORANT	OZ	32	64	128
W1-WHITE	–	7	–	1
B1-BLACK	–	47	–	–
G2-NEW GREEN	–	10	1	–
N1-RAW UMBER	–	3	–	1
Y3-DEEP GOLD	–	11	–	–

4. ALL PAINT COLOR TO BE CONFIRMED BY OWNER PRIOR TO ORDERING.

2 / C107 PORTABLE RESTROOM SCREEN WALL
SCALE: NTS

This drawing is the property of Century Engineering, Inc. and is prepared for the exclusive use of its clients at the location indicated. No other use is authorized or intended.

CENTURY ENGINEERING, INC.
ADDRESS: 550 BAY ROAD DOVER, DE 19901
P: (302) 734-9188 F: (302) 734-4589
WEBSITE: www.centuryeng.com
EMAIL: ce@centuryeng.com

REVISIONS

ADDENDUM

DESCRIPTION	DATE

PROJECT
CONSTRUCTION PLANS
FOR
DELAWARE DIVISION OF FISH & WILDLIFE
WAGAMONS POND BOAT RAMP RECONSTRUCTION
BROADKILL HUNDRED, SUSSEX COUNTY, DELAWARE

SHEET TITLE
CONSTRUCTION DETAILS

DIV. OF FISH AND WILDLIFE
100% SUBMISSION
MAY, 2020

DRAWN	CHK'D/DESIGNER
DFS/MDS	AES
SCALE	SHEET NO.
1" = 20'	C107

PROJECT NO.
175013.44

ALEXANDER E. SCHMIDT LICENSE No. 16139 DELAWARE PROFESSIONAL ENGINEER

Q:\Projects\175013.00 (NWDC 2017 Engineering DE)\175013.44 (Wagamons Pond Boat Ramp)\CADD FILES\Sheets\C107 - Construction Details.dwg, 5/5/2020 12:11 PM

Standard Detail & Specifications
Construction Site Waste Mgt & Spill Control

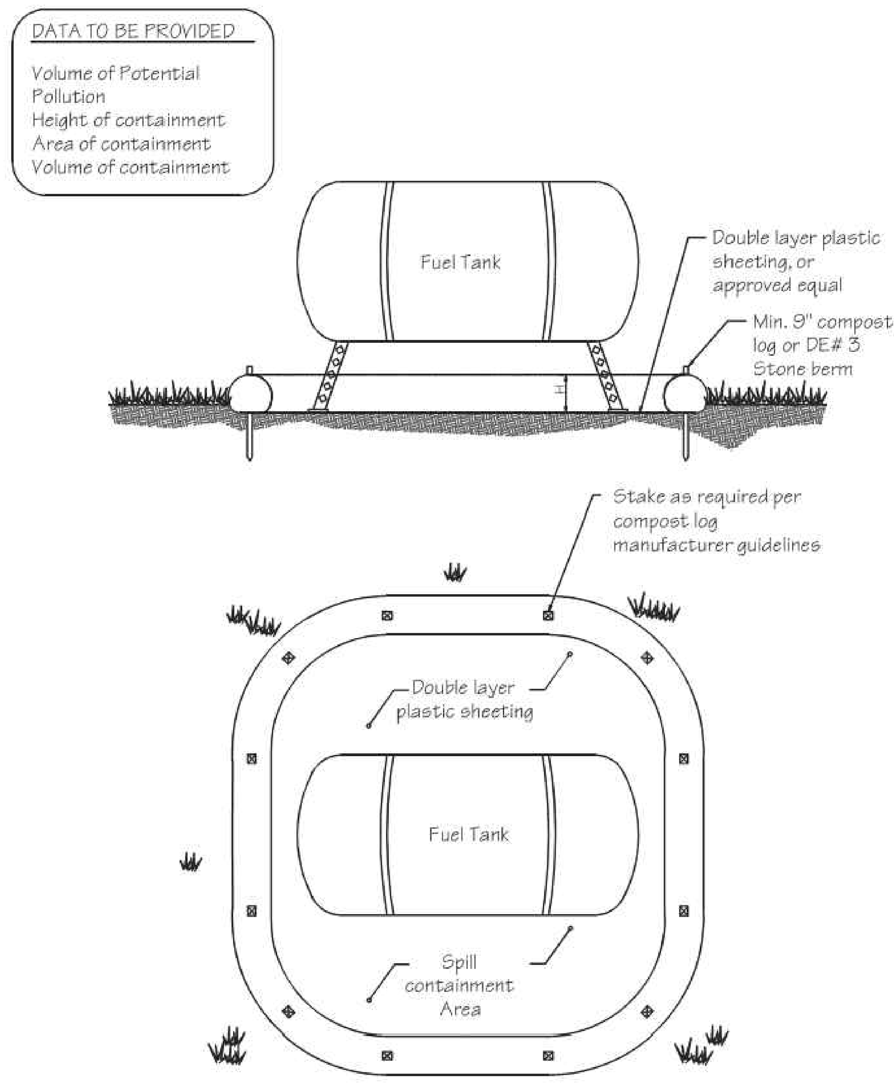

Source:	Symbol:	Detail No.
Delaware ESC Handbook		DE-ESC-3.6.1 Sheet 1 of 5 Effective FEB 2019

Standard Detail & Specifications
Construction Site Waste Mgt & Spill Control

Pollution Prevention – Spill Prevention

1. Fueling should only take place in signed designated areas, away from downstream drainage facilities and watercourses.
2. Fueling must be with nozzles equipped with automatic shut-off to control drips. Do not top off.
3. Protect the areas where equipment or vehicles are being repaired, maintained, fueled or parked from storm water run-on and runoff.
4. Use barriers such as berms to prevent storm water run-on and runoff, and to contain spills.
5. Place a "Fueling Area" sign next to each fueling area.
6. Store hazardous materials such as fuel, solvents, oil and chemicals in secondary containment.
7. Inspect vehicles and equipment for leaks on each day of use. Repair fluid and oil leaks immediately.
8. Absorbent spill clean-up materials and spill kits must be available in fueling areas and on fuel trucks.
9. If fueling is to take place at night, make sure the fueling area is sufficiently illuminated.
10. Properly dispose of used oil, fluids, lubricants and spill clean-up materials.

CLEAN UP SPILLS

1. If it is safe to do so, immediately contain and clean up any chemical and/or hazardous material spills.
2. Properly dispose of used oil, fluids, lubricants and spill clean-up materials.
3. Do not bury spills or wash them down with water.

LEAKS AND DRIPS

1. Use drip pans or absorbent pads at all times. Place under and around leaky equipment.
2. Do not allow oil, grease, fuel or chemicals to drip onto the ground.
3. Have spill kits and clean up material on-site.
4. Repair leaky equipment promptly or remove problem vehicles and equipment from the site. Clean up contaminated soil immediately.
5. Store contaminated waste in sealed containers constructed of suitable material. Label these containers properly.
6. Clean up all spills and leaks. Promptly dispose of waste and spent clean up materials.

Source:	Symbol:	Detail No.
Delaware ESC Handbook		DE-ESC-3.6.1 Sheet 2 of 5 Effective FEB 2019

Standard Detail & Specifications
Construction Site Waste Mgt & Spill Control

Notes:

The Construction Site Pollution Prevention Plan should include the following elements:

1. **Material Inventory**

   Document the storage and use of the following materials:
   a. Concrete
   b. Detergents
   c. Paints (enamel and latex)
   d. Cleaning solvents
   e. Pesticides
   f. Wood scraps
   g. Fertilizers
   h. Petroleum based products

2. **Good housekeeping practices**
   a. Store only enough product required to do the job.
   b. All materials shall be stored in a neat, orderly manner in their original labeled containers and covered.
   c. Substances shall not be mixed.
   d. When possible, all of a product shall be used up prior to disposal of the container.
   e. Manufacturers' instructions for disposal shall be strictly adhered to.
   f. The site foreman shall designate someone to inspect all BMPs daily.

3. **Waste management practices**
   a. All waste materials shall be collected and stored in securely lidded dumpsters in a location that does not drain to a waterbody.
   b. Waste materials shall be salvaged and/or recycled whenever possible.
   c. The dumpsters shall be emptied a minimum of twice per week, or more if necessary. The licensed trash hauler is responsible for cleaning out dumpsters.

Source:	Symbol:	Detail No.
Adapted from USEPA Pub. 840-B-92-002		DE-ESC-3.6.1 Sheet 3 of 5 Effective FEB 2019

Standard Detail & Specifications
Construction Site Waste Mgt & Spill Control

Notes (cont.)

   d. Trash shall be disposed of in accordance with all applicable Delaware laws.
   e. Trash cans shall be placed at all lunch spots and littering is strictly prohibited. Recycle bins shall be placed near the construction trailer.
   f. If fertilizer bags can not be stored in a weather-proof location, they shall be kept on a pallet and covered with plastic sheeting which is overlapped and anchored.

4. **Equipment maintenance practices**
   a. If possible, equipment should be taken to off-site commercial facilities for washing and maintenance.
   b. If performed on-site, vehicles shall be washed with high-pressure water spray without detergents in an area contained by an impervious berm.
   c. Drip pans shall be used for all equipment maintenance.
   d. Equipment shall be inspected for leaks on a daily basis.
   e. Washout from concrete trucks shall be disposed of in a temporary pit for hardening and proper disposal.
   f. Fuel nozzles shall be equipped with automatic shut-off valves.
   g. All used products such as oil, antifreeze, solvents and tires shall be disposed of in accordance with manufacturers' recommendations and local, state and federal laws and regulations.

5. **Spill prevention practices**
   a. Potential spill areas shall be identified and contained in covered areas with no connection to the storm drain system.
   b. Warning signs shall be posted in hazardous material storage areas.
   c. Preventive maintenance shall be performed on all tanks, valves, pumps, pipes and other equipment as necessary.
   d. Low or non-toxic substances shall be prioritized for use.

Source:	Symbol:	Detail No.
Adapted from USEPA Pub. 840-B-92-002		DE-ESC-3.6.1 Sheet 4 of 5 Effective FEB 2019

Standard Detail & Specifications
Construction Site Waste Mgt & Spill Control

Notes (cont.)

   e. Contact information for reporting spills through the DNREC 24-Hour Toll Free Number shall be prominently posted.

6. **Education**
   a. Best management practices for construction site pollution control shall be a part of regular progress meetings.
   b. Information regarding waste management, equipment maintenance and spill prevention shall be prominently posted in the construction trailer.

CONTACT INFORMATION

DNREC 24-Hour Toll Free Number	**800-662-8802**
DNREC Solid & Hazardous Waste Management Section	**302-739-9403**

Source:	Symbol:	Detail No.
Adapted from USEPA Pub. 840-B-92-002		DE-ESC-3.6.1 Sheet 5 of 5 Effective FEB 2019

Standard Detail & Specifications
Sensitive Area Protection

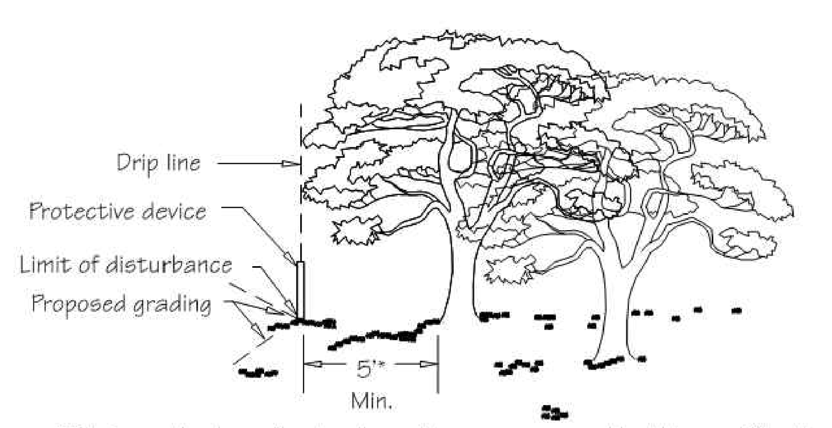

*5' min. setback applies to all sensitive areas covered by this specification.

Location of Sensitive Area Protection

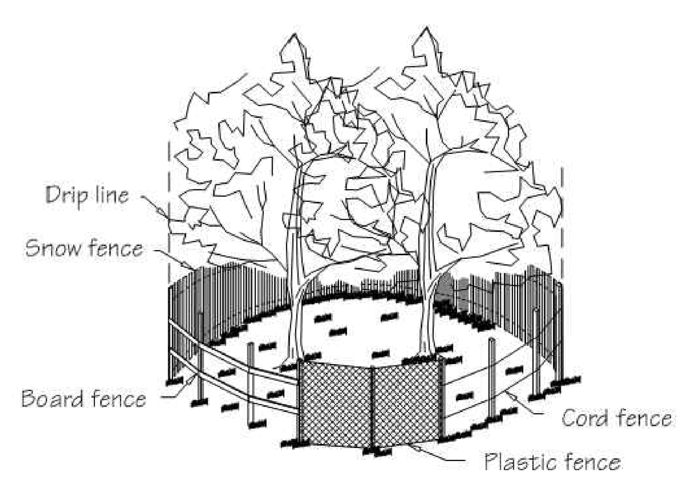

Methods of Sensitive Area Protection

Source:	Symbol:	Detail No.
Adapted from VA ESC Handbook	SAP	DE-ESC-3.7.2 Sheet 1 of 3 Effective FEB 2019

Standard Detail & Specifications
Sensitive Area Protection

Construction Notes:

Fencing shall be installed at the extents of all sensitive areas. For trees, the fencing shall be installed outside the dripline (mature canopy) and at no time within 5 feet of the trunk. Personnel must be instructed to honor protective devices. The devices described are suggested only, and are not intended to exclude the use of other devices which will protect the trees to be retained. If silt fence is to be used for demarcation purposes, appropriate signage shall be provided a minimum of every 20 feet denoting the area as a sensitive area protection zone.

Materials:

1. Snow Fence - Standard 40-inch high snow fence shall be placed at the limits of clearing or construction on standard steel posts set 6 feet apart.
2. Board Fence - Board fencing consisting of 4-inch square posts set securely in the ground and protruding at least 4 feet above the ground shall be placed at the limits of clearing with a minimum of two horizontal boards between posts. For tree proteciton, if it is not practical to erect a fence at the drip line, construct a triangular fence nearer the trunk. The limits of clearing will still be located at the drip line, since the root zone within the drip line will still require protection.
3. Plastic Fencing - 40-inch high "international orange" plastic (polyethylene) web fencing secured to conventional metal "T" or "U" posts driven to a minimum depth of 18 inches on 6-foot minimum centers shall be installed at the limits of clearing. The fence should have the following minimum physical qualities:

a.	Tensile yield:	Average 2,000 lbs. per 4-foot width (ASTM D638)
b.	Ultimate tensile yield:	Average 2,900 lbs. per 4-foot width (ASTM D638)
c.	Elongation at break (%):	Greater than 1000% (ASTM D638)
d.	Chemical resistance:	Inert to most chemicals and acids

Source:	Symbol:	Detail No.
Adapted from VA ESC Handbook	SAP	DE-ESC-3.7.2 Sheet 2 of 3 Effective FEB 2019

Standard Detail & Specifications
Sensitive Area Protection

4. Cord Fence - Posts with a minimum size of 2 inches square or 2 inches in diameter set securely in the ground and protruding at least 4 feet above the ground shall be placed at the limits of clearing with two rows of cord 1/4-inch or thicker at least 2 feet apart running between posts with strips of colored surveyor's flagging tied securely to the string at intervals no greater than 3 feet.
5. Earth Berms - Temporary earth berms shall be constructed according to specifications for a Temporary Earth Dike with the base of the berm on the sensitive area side located along the limits of clearing. Earth berms may not be used for this purpose if their presence will conflict with drainage patterns.
6. Trunk Armoring (Tree Protection Only) - As a last resort, a tree trunk can be armored with burlap wrapping and 2-inch studs wired vertically no more than 2 inches apart to a height of 5 feet encircling the trunk. If this alternative is used, the root zone within the drip line will still require protection. Nothing should ever be nailed to a tree.

Maintenance:

Fencing and armoring devices shall be in place before any excavation or grading is begun, shall be kept in good repair for the duration of construction activities, and shall be the last items removed during the final cleanup after the completion of the project.

ALEXANDER E. SCHMIDT LICENSE No. 16139 PROFESSIONAL ENGINEER DELAWARE

Source:	Symbol:	Detail No.
Adapted from VA ESC Handbook	SAP	DE-ESC-3.7.2 Sheet 3 of 3 Effective FEB 2019

This drawing is the property of Century Engineering, Inc. and is prepared for the exclusive use of its clients at the location indicated. No other use is authorized or intended.

CENTURY ENGINEERING, INC.
ADDRESS: 550 BAY ROAD DOVER, DE 19901
P: (302) 734-9188 F: (302) 734-4589
WEBSITE: www.centuryeng.com
EMAIL: cei@centuryeng.com

REVISIONS

ADDENDUM

DESCRIPTION DATE

PROJECT
CONSTRUCTION PLANS
FOR
DELAWARE DIVISION OF FISH & WILDLIFE
WAGAMONS POND BOAT RAMP RECONSTRUCTION
BROADKILL HUNDRED, SUSSEX COUNTY, DELAWARE

SHEET TITLE
EROSION & SEDIMENT CONTROL DETAILS

DIV. OF FISH AND WILDLIFE
100% SUBMISSION
MAY, 2020

DRAWN	CHK'D/DESIGNER
DFS/MDS	AES
SCALE	SHEET NO.
1" = 30'	C108
PROJECT NO.	
175013.44	

Standard Detail & Specifications
Topsoiling

DELAWARE EROSION & SEDIMENT CONTROL HANDBOOK

Construction Notes:

1. **Site Preparation** (Where Topsoil is to be added)

   Note: When topsoiling, maintain needed erosion and sediment control practices such as diversions, grade stabilization structures, berms, dikes, waterways and sediment basins.

   a. Grading - Grades on the areas to be topsoiled which have been previously established shall be maintained.

   b. Liming - Where the topsoil is either highly acid or composed of heavy clays, ground limestone shall be spread at the rate of 4-8 tons/acre (200-400 pounds per 1,000 square feet). Lime shall be distributed uniformly over designated areas and worked into the soil in conjunction with tillage operations as described in the following procedures.

   c. Tilling - After the areas to be topsoiled have been brought to grade, and immediately prior to dumping and spreading the topsoil, the subgrade shall be loosened by discing or by scarifying to a depth of a least 3 inches to permit bonding of the topsoil to the subsoil. Pack by passing a bulldozer up and down over the entire surface area of the slope to create horizontal erosion check slots to prevent topsoil from sliding down the slope.

2. **Topsoil Material and Application**

   Note:Topsoil salvaged from the existing site may often be used but it should meet the same standards as set forth in these specifications. The depth of topsoil to be salvaged shall be no more than the depth described as a representative profile for that particular soil type as described in the soil survey published by USDA-SCS in cooperation with Delaware Agricultural Experimental Station.

Source:	Symbol:	Detail No.
USDA - NRCS		DE-ESC-3.4.1 Sheet 1 of 2 Effective FEB 2019

Standard Detail & Specifications
Topsoiling

DELAWARE EROSION & SEDIMENT CONTROL HANDBOOK

Construction Notes (cont.)

a. Materials - Topsoil shall be a loam, sandy loam, clay loam, silt loam, sandy clay loam, loamy sand or other soil as approved by an agronomist or soil scientist. It shall not have a mixture of contrasting textured subsoil and contain no more than 5 percent by volume of cinders, stones, slag, coarse fragment, gravel, sticks, roots, trash or other extraneous materials larger than 1-1/2 inches in diameter. Topsoil must be free of plants or plant parts of bermudagrass, quackgrass, Johnsongrass, nutsedge, poison ivy, thistles, or others as specified. All topsoil shall be tested by a reputable laboratory for organic matter content, pH and soluble salts. A pH of 6.0 to 7.5 and an organic content of not less than 1.5 percent by weight is required. If pH value is less than 6.0 lime shall be applied and incorporated with the topsoil to adjust the pH to 6.5 or higher. Topsoil containing soluble salts greater than 500 parts per million shall not be used.

Note: No sod or seed shall be placed on soil which has been treated with soil sterilants or chemicals used for weed control until sufficient time has elapsed to permit dissipation of toxic materials.

b. Grading - The topsoil shall be uniformly distributed and compacted to a minimum of four (4) inches. Spreading shall be performed in such a manner that sodding or seeding can proceed with a minimum of additional soil preparation and tillage. Any irregularities in the surface resulting from topsoiling or other operations shall be corrected in order to prevent the formation of depressions or water pockets. Topsoil shall not be placed while in a frozen or muddy condition, when the subgrade is excessively wet, or in a condition that may otherwise be detrimental to proper grading and seedbed preparation.

Note:Topsoil substitutes or amendments as approved by a qualified agronomist or soil scientist, may be used in lieu of natural topsoil. Compost material used to improve the percentage of organic matter shall be provided by a certified supplier.

Compost amendments that are intended to meet specific post-construction stormwater management goals shall further meet the requirements of **Appendix 3.06.2 Post Construction Stormwater Management BMP Standards and Specifications, Section 14.0 Soil Amendments.**

Source:	Symbol:	Detail No.
USDA - NRCS		DE-ESC-3.4.1 Sheet 2 of 2 Effective FEB 2019

Standard Detail & Specifications
Pumping Pit - Type 2

DELAWARE EROSION & SEDIMENT CONTROL HANDBOOK

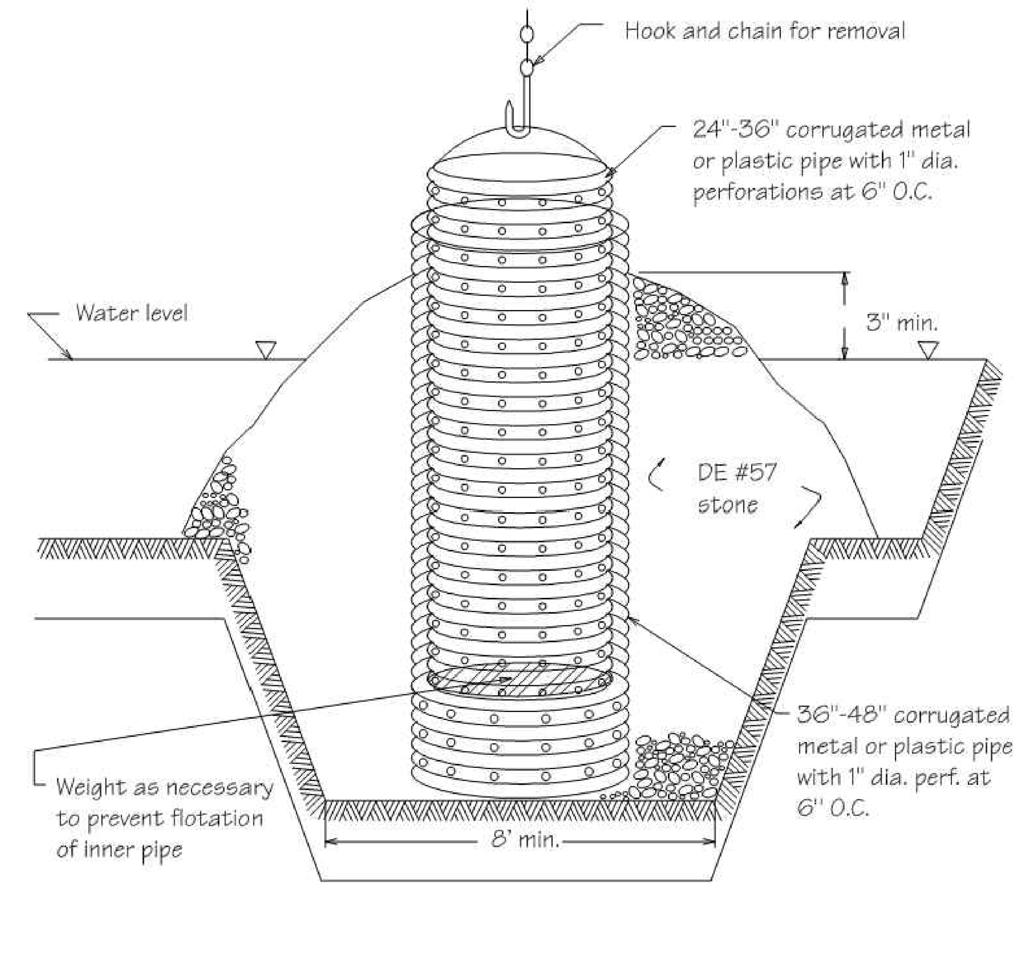

Section

Source:	Symbol:	Detail No.
Adapted from MD Stds. & Specs. for ESC	PP-2	DE-ESC-3.2.2.2 Sheet 1 of 2 Effective FEB 2019

Standard Detail & Specifications
Pumping Pit - Type 2

DELAWARE EROSION & SEDIMENT CONTROL HANDBOOK

Construction Notes:

1. Pit shall have a minimum bottom width of 8'.
2. The inside standpipe should be constructed by perforating a 24" to 36" diameter corrugated or PVC pipe. The perforations shall be 1/2" X 6" slits or 1" diameter holes 6" on center.
3. The outside pipe shall be at least 12" larger in diameter than the inside pipe.
4. After installing the standpipes, the pit surrounding the standpipes should then be backfilled with DE #57 aggregate. The height of the stone shall be a min. 3" above the design high water elevation in the trap or basin.
5. The standpipes should extend 12" to 18" above the design high water elevation in the trap or basin.

NOTE: If discharge will be pumped directly to a storm drainage system, the standpipe must be wrapped with Type GD-II geotextile fabric before installation. If desired, 1/2" hard-ware cloth may be placed around the standpipe, prior to attaching the geotextile fabric. This will increase the rate of water seepage into the pipe.

Source:	Symbol:	Detail No.
Adapted from MD Stds. & Specs. for ESC	PP-2	DE-ESC-3.2.2.2 Sheet 2 of 2 Effective FEB 2019

Standard Detail & Specifications
Concrete Washout

DELAWARE EROSION & SEDIMENT CONTROL HANDBOOK

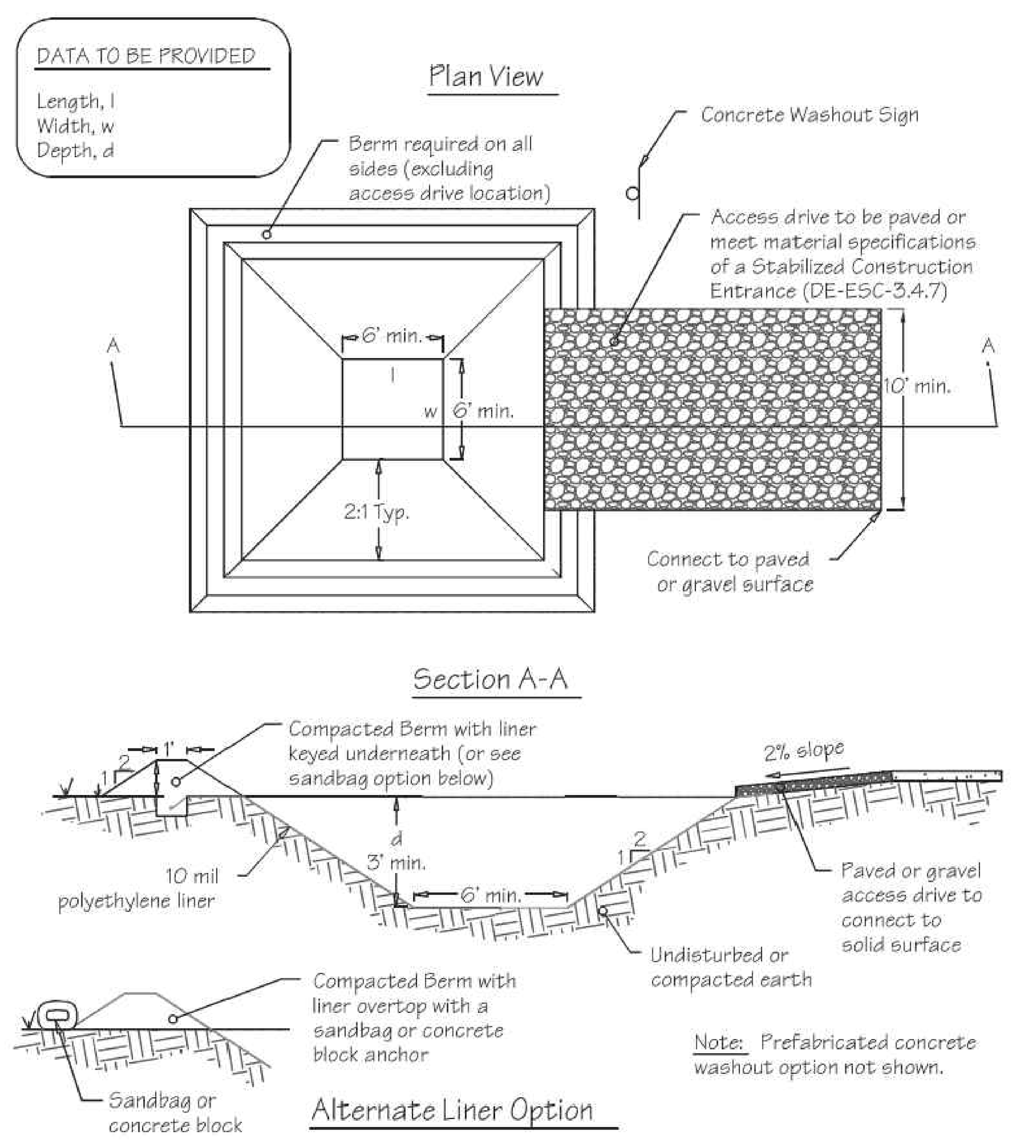

Source:	Symbol:	Detail No.
Adapted from Colorado Urban Storm Drainage Criteria Manual, Vol 3	CW	DE-ESC-3.6.2 Sheet 1 of 2 Effective FEB 2019

Standard Detail & Specifications
Concrete Washout

DELAWARE EROSION & SEDIMENT CONTROL HANDBOOK

Construction Notes:

1. Locate washout area a minimum of 50 feet from open channels, stormdrain inlets, wetlands or waterbodies.
2. Locate washout area so that it is accessible to concrete equipment (service with a minimum 10 foot wide gravel accessway), but so it is not in a highly active construction area causing accidental damage.
3. Minimum dimensions for prefabricated units are 4 feet by 4 feet by 1 foot deep with a minimum 4mil polyethylene plastic liner. Minimum dimensions for constructed concrete washout areas are 6 feet by 6 feet by 3 feet deep, with a minimum 10mil polyethylene liner, 2:1 side slopes, and a 1 foot high by 1 foot wide compacted fill berm.
4. The liner must be free of tears or holes and placed over smooth surfaces to prevent puncturing. For excavated washouts, anchor the liner underneath the berm or overtop with sandbags or concrete blocks to hold in place.
5. Provide a sign designating the washout area, and for large construction sites, provide signs throughout directing traffic to its location.
6. Allow washed out concrete mixture to harden through evaporation of the wastewater. Once the facility has reached 75 percent of its capacity, remove the hardened concrete by reusing the broken aggregate onsite, recycling, or disposing of offsite. The hardened material can be buried on site with minimum of 1 foot of clean, compacted fill.
7. Apply a new liner before reusing the station for additional washouts after maintenance has occurred.

Source:	Symbol:	Detail No.
Adapted from Colorado Urban Storm Drainage Criteria Manual, Vol 3	CW	DE-ESC-3.6.2 Sheet 2 of 2 Effective FEB 2019

Standard Detail & Specifications
Dust Control

DELAWARE EROSION & SEDIMENT CONTROL HANDBOOK

Temporary Methods:

1. Mulches - See **DE-ESC-3.4.5**, Standard Detail and Specifications for Mulching.
2. Vegetative cover - See **DE-ESC-3.4.3**, Std. Detail and Specifications for Vegetative Stabilization.
3. Adhesives - Use on mineral soils only (not effective on muck soils). Keep traffic off these areas. The following table may be used for general guidance.

Type of Emulsion	Water Dilution	Type of Nozzle	Apply Gal/Ac.
Latex emulsion	12.5:1	Fine spray	235
Resin-in-water emulsion	4:1	Fine spray	300
Acrylic emulsion (non-trafffic)	7:1	Coarse spray	450
Acrylic emulsion (traffic)	3.5:1	Coarse spray	350

4. Tillage - For emergency temporary treatment, scarify the soil surface to prevent or reduce the amount of blowing dust until a more appropriate solution can be implemented. Begin the tillage operation on the windward side of the site using a chisel-type plow for best results.
5. Sprinkling - Sprinkle site with water until the surface is moist . Repeat as needed.
6. Calcium Chloride - Apply as flakes or granular material with a spreader at a rate that will keep the soil surface moist. Re-apply as necessary.
7. Barriers - Place barriers such as solid board fences, snow fences, hay bales, etc. at right angles to the prevailing air currents at intervals of approx. 10X their height.

Permanent Methods:

1. Vegetative cover - See **DE-ESC-3.4.3**, Std. Detail and Specifications for Vegetative Stabilization.
2. Stone - Apply layer of crushed stone or coarse gravel to protect soil surface.

Source:	Symbol:	Detail No.
Adapted from VA ESC Handbook		DE-ESC-3.4.8 Sheet 1 of 1 Effective FEB 2019

This drawing is the property of Century Engineering, Inc. and is prepared for the exclusive use of its clients at the location indicated. No other use is authorized or intended.

CENTURY ENGINEERING, INC.
ADDRESS: 550 BAY ROAD DOVER, DE 19901
P: (302) 734-9188 F: (302) 734-4589
WEBSITE: www.centuryeng.com
EMAIL: cei@centuryeng.com

REVISIONS

ADDENDUM

DESCRIPTION	DATE

PROJECT

CONSTRUCTION PLANS
FOR
DELAWARE DIVISION OF FISH & WILDLIFE
WAGAMONS POND BOAT RAMP RECONSTRUCTION
BROADKILL HUNDRED, SUSSEX COUNTY, DELAWARE

SHEET TITLE

EROSION & SEDIMENT CONTROL DETAILS

DIV. OF FISH AND WILDLIFE
100% SUBMISSION
MAY, 2020

DRAWN	CHK'D/DESIGNER
DFS/MDS	AES
SCALE	SHEET NO.
1" = 30'	C109
PROJECT NO. 175013.44	

ALEXANDER E. SCHMIDT LICENSE No. 16439 DELAWARE PROFESSIONAL ENGINEER

G:\Projects\175013.00 DNREC 2017 Engineering QE\175013.44 (Wagamons Pond Boat Ramp)\CADD FILES\Sheets\C106,109,110,111 -- E&S Details.dwg, 5/5/2020 12:11 PM

Standard Detail & Specifications
Mulching

1. Materials and Amounts

a. *Straw* - Straw shall be unrotted small grain straw applied at the rate of 1-1/2 to 2 tons per acre, or 70 to 90 pounds (two bales) per 1,000 square feet. Mulch materials shall be relatively free of weeds and shall be free of noxious weeds such as; thistles, Johnsongrass, and quackgrass. Spread mulch uniformly by hand or mechanically. For uniform distribution of hand spread mulch, divide area into approximately 1,000 square feet sections and place 70-90 pounds (two bales) of mulch in each section.

b. *Wood chips* - Apply at the rate of approximately 6 tons per acre or 275 pounds per 1,000 square feet when available and when feasible. These are particularly well suited for utility and road rights-of-way. If wood chips are used, increase the application rate of nitrogen fertilizer by 20 pounds of N per acre (200 pounds of 10-10-10 or 66 pounds of 30-0-0 per acre).

c. *Hydraulically applied mulch* -The following conditions apply to hydraulically applied mulch:

i. Definitions:

a. Wood fiber mulch shall consist of specially prepared wood that has been processed to a uniform state, is packaged for sale as a hydraulic mulch for use with hydraulic seeding equipment, and consists of a minimum of 70% virgin or recycled wood fiber combined with 30% paper fiber and additives.

b. Blended fiber mulch shall consist of any hydraulic mulch that contains greater than 30% paper fiber. The paper component must consist of specially prepared paper that has been processed to a uniform fibrous state and is packaged for sale as a hydraulic mulch for use with hydraulic seeding equipment.

c. A bonded fiber matrix (BFM) consists of long strand, specially prepared wood fibers that have been processed to a uniform state held together by a water resistant bonding agent. BFMs shall contain no paper (cellulose) mulch but may contain small percentages of synthetic fibers to enhance performance.

d. Refer to **Figure 3.4.5a** for conditions and limitations of use for each of the above categories of hydraulic mulch.

ii. All components of the hydraulically applied mulches shall be pre-packaged by the manufacturer to assure material performance. Field mixing of the mulch components is acceptable, but must be done per manufacturers recommendations to ensure the proper results.

iii. Hydraulic mulches shall be applied with a viable seed and at manufacturer's recommended rates. Increased rates may be necessary based on site conditions.

iv. Hydraulically applied mulches and additives shall be mixed according to manufacturers recommendations.

iv. Materials within this category shall only be used when hydraulically applied mulch has been specified for use on the approved Sediment and Stormwater Plan, or supplemental approval from the plan approval agency has been obtained in writing for a specific area.

Source:	Symbol:	Detail No.
Delaware ESC Handbook & Filtrex™ International		**DE-ESC-3.4.5** Sheet 1 of 3 Effective FEB 2019

Standard Detail & Specifications
Mulching

v. Application:

a. Apply product to geotechnically stable slopes that have been designed and constructed to divert runoff away from the face of the slope.

b. Do not apply to saturated soils, or if precipitation is anticipated within 24-48 hours.

c. During the spring (March 1 to May 31) and fall (September 1 to November 30) seasons, hydraulic mulches may be applied in a one-step process where all components are mixed together in single-tank loads. It is recommended that the product be applied from opposing directions to achieve optimum soil coverage.

d. During the summer (June 1 to August 31) and winter (December 1 to February 28) seasons, the following two-step process is required:

Step One– Mix and apply seed and soil amendments with a small amount of mulch for visual metering.

Step Two – Mix and apply mulch at manufacturers recommended rates over freshly seeded surfaces. Apply from opposing directions to achieve optimum soil coverage.

e. Minimum curing temperature is 40° F (4° C). The best results and more rapid curing are achieved at temperatures exceeding 60° F (15° C). Curing times may be accelerated in high temperature, low humidity conditions on dry soils.

vi. Recommended application rates are for informational purposes only. Conformance with this standard and specification shall be performance-based and requires **100% soil coverage**. Any areas with bare soil showing shall be top dressed until full coverage is achieved.

d. *Compost blanket (CB)* - Loosely applied with a pneumatic blower so that a 1" compost blanket uniformly covers the **soil with 100% coverage**. This application can be used with seed to promote germination by applying the approved seed mix directly into the loosely blown compost. The compost blanket performs best on slopes less than 2:1 and requires no mulch anchoring.

2. Anchoring mulch - Mulch must be anchored immediately to minimize loss by wind or water. This may be done by one of the following methods, depending upon size of area, erosion hazard, and cost.

a. *Crimping* - A crimper is a tractor drawn implement designed to punch and anchor mulch into the top two (2) inches of soil. This practice affords maximum erosion control but is limited to flatter slopes where equipment can operate safely. On sloping land, crimping should be done on the contour whenever possible.

b. *Tracking* - Tracking is the process of cutting mulch (usually straw) into the soil using a bulldozer or other equipment that runs on cleated tracks. Tracking is used primarily on slopes 3:1 or steeper and should be done up and down the slope with cleat marks running across the slope.

c. *Liquid mulch binders* - Applications of liquid mulch binders should be heavier at edges, in valleys, and at crests of banks and other areas where the mulch will be moved by wind or water. All other areas should have a uniform application of binder. The use of synthetic binders is the preferred method of mulch binding and should be applied at the rates recommended by the manufacturer.

d. *Paper fiber* - The fiber binder shall be applied at a net dry weight of 750 lbs/ac. The wood cellulose fiber shall be mixed with water, and the mixture shall contain a maximum of 50 lbs. of wood cellulose fiber per 100 gallons.

e. *Nettings* - Synthetic or organic nettings may be used to secure straw mulch. Install and secure according to the manufacturers recommendations.

Source:	Symbol:	Detail No.
Delaware ESC Handbook & Filtrex™ International		**DE-ESC-3.4.5** Sheet 2 of 3 Effective FEB 2019

Standard Detail & Specifications
Mulching

MULCHING MATERIAL SELECTION GUIDE

Percent Slope	Type of Mulch / App. Rate*	Dec. 1 to Feb. 28(29)	March 1 to May 31	June 1 to Aug. 31	Sept. 1 to Nov. 30
Less than 2%	Blended Fiber @ 2000 lbs/ac. minimum	xxxxxxxxxxxxxxxx	OK (≤1 ac.)	xxxxxxxxxxxxxxxx	OK (≤1 ac.)
	Wood Fiber @ 2000 lbs/ac. min.	xxxxxxxxxxxxxxxx	OK	xxxxxxxxxxxxxxxx	OK
	BFM @ 3000 lbs/ac. min.	OK	OK	OK	OK
	Straw @ 2 Tons/ac. Min.	OK	OK	OK	OK
	Stabilization Matting**	OK	OK	OK	OK
	1" Compost Blanket (CB)	OK	OK	OK	OK
2% to 5.9%	Wood Fiber @ 2000 lbs/ac. min.	xxxxxxxxxxxxxxxx	OK	xxxxxxxxxxxxxxxx	OK
	BFM @ 3000-3500 lbs/ac. min	OK	OK	OK	OK
	Straw @ 2 Tons/ac. min.	OK	OK	OK	OK
	Stabilization Matting**	OK	OK	OK	OK
	1" Compost Blanket (CB)	OK	OK	OK	OK
6% to 10.9%	Wood Fiber @ 2000-2500 lbs/ac. min.	xxxxxxxxxxxxxxxx	OK	xxxxxxxxxxxxxxxx	OK
	BFM @ 3500-4000 lbs/ac. min.	OK	OK	OK	OK
	Straw @ 2 Tons/ac. min.	OK	OK	OK	OK
	Stabilization Matting**	OK	OK	OK	OK
	1" Compost Blanket (CB)	OK	OK	OK	OK
11% to 24.9%	Wood Fiber @ 2500-3000 lbs/ac. min.	xxxxxxxxxxxxxxxx	OK	xxxxxxxxxxxxxxxx	OK
	BFM @ 3500-4000 lbs/ac. min.	OK	OK	OK	OK
	Straw @ 2 Tons/ac. min.	OK	OK	OK	OK
	Stabilization Matting**	OK	OK	OK	OK
	1" Compost Blanket (CB)	OK	OK	OK	OK
25% to 33%	Wood Fiber @ 2500-3000 lbs/ac. min.	xxxxxxxxxxxxxxxx	OK	xxxxxxxxxxxxxxxx	OK
	BFM @ 4000 lbs/ac. min.	xxxxxxxxxxxxxxxx	OK	xxxxxxxxxxxxxxxx	OK
	Straw @ 2 Tons/ac. min.	OK	OK	OK	OK
	Stabilization Matting**	OK	OK	OK	OK
	1" Compost Blanket (CB)	OK	OK	OK	OK
33% and up	BFM @ 4000-4500 lbs/ac. min.	xxxxxxxxxxxxxxxx	OK	xxxxxxxxxxxxxxxx	OK
	Straw @ 2 Tons/ac. min.***	OK	OK	OK	OK
	Stabilization Matting**	OK	OK	OK	OK
	1" Compost Blanket (CB)	2:1 Max.	2:1 Max.	2:1 Max.	2:1 Max.

* Note: Manufacturers Recommended Rates for informational purposes only. Performance standard requires 100% soil coverage.
** Note: Stabilization Matting must be applied in accordance with Section 3.4.6 of the Delaware ESC Handbook.
***Note: Straw applied on slopes greater than 33% must be netted (this does not apply to topsoil stockpiles).
OK = Acceptable to use during this time period.
xxx = Not acceptable to use during this time period.
All application rates are minimums

Source:	Symbol:	Detail No.
Delaware ESC Handbook & Filtrex™ International		**DE-ESC-3.4.5** Sheet 3 of 3 Effective FEB 2019

Standard Detail & Specifications
Portable Sediment Tank

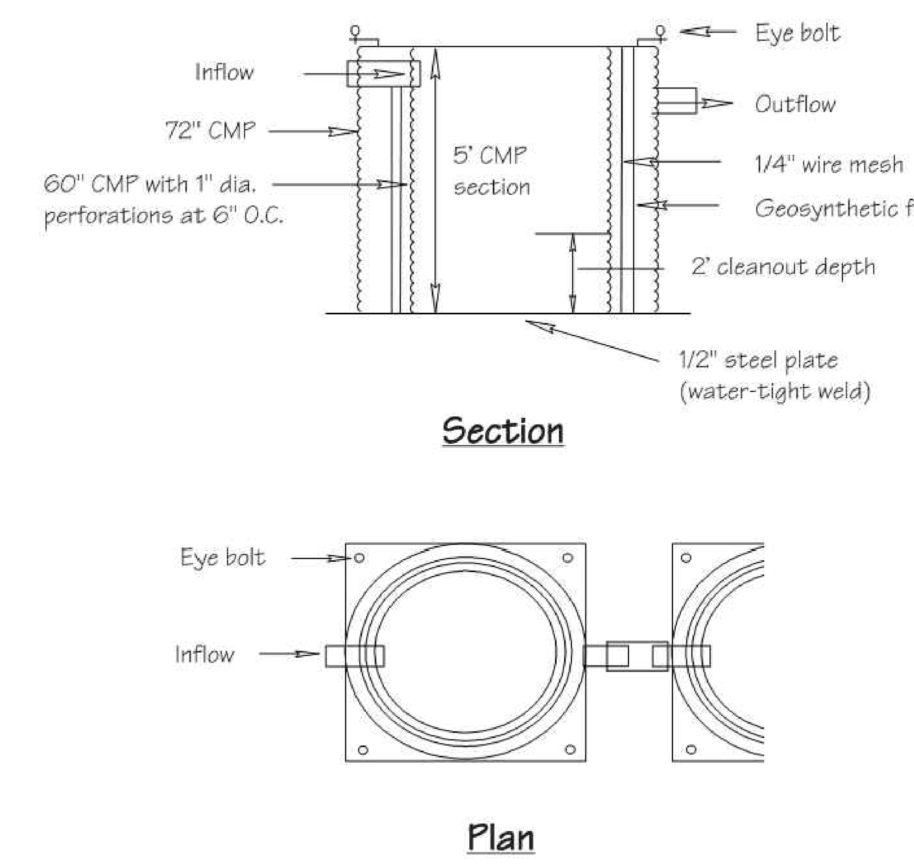

Construction Notes:

1. Required storage volume = 1 c.f. storage/1 gpm pump discharge.
2. Tanks may be connected in series to provide required storage.

Source:	Symbol:	Detail No.
Adapted from MD Stds. & Specs. for ESC	ST	**DE-ESC-3.2.1.1** Sheet 1 of 1 Effective FEB 2019

Standard Detail & Specifications
Vegetative Stabilization

TEMPORARY SEEDING BY RATES, DEPTHS AND DATES

Mix #	Species[6] Certified Seed	Seeding Rate lb/Ac[5]	Seeding Rate lb/1000 sq.ft.	Coastal Plain 2/1-4/30	Coastal Plain [2] 5/1-8/14	Coastal Plain 8/15-10/31	Piedmont 3/1-4/30	Piedmont [2] 5/1-7/31	Piedmont 8/1-10/31	All 10/31-2/1	Planting Depth[3]
1	Barley	125	4	O	A	O	O	A	O		1-2 inches 2-3" sandy soils
2	Oats	125	4	O	A	A	O	A	A		1-2 inches 2-3" sandy soils
3	Rye	125	4	O	A	O	O	A	O	A	1-2 inches 2-3" sandy soils
4	Perennial Ryegrass	125	4	O	A	O	O	A	O		0.5 inches 1-2" sandy soils
5	Annual Ryegrass	125	4	O	A	O	O	A	O	A	0.5 inches 1-2" sandy soils
6	Winter Wheat	125	4	O	A	O	O	A	O	A	1-2 inches 2-3" sandy soils
7	Foxtail Millet	30 PLS	0.7		O			O			0.5 inches 1-2" sandy soils
8	Pearl Millet	20 PLS	0.5		O			O			0.5 inches 1-2" sandy soils

Optimum Seeding Dates[1]: O = Optimum Planting Period; A = Acceptable Planting Period

1. Winter seeding requires 3 tons per acre of straw mulch for proper stabilization.
2. May be planted throughout summer if soil moisture is adequate or seeded area can be irrigated.
3. Applicable on slopes 3:1 or less.
4. Fifty pounds per acre of Annual Lespedeza may be added to 1/2 the seeding rate of any of the above species.
5. Use varieties currently recommended for Delaware. Contact a County Extension Office for information.
6. Warm season grasses such as Millet or Weeping Lovegrass may be used between 5/1 and 9/1 if desired. Seed at 3-5 lbs. per acre. Good on low fertility and acid areas. Seed after frost through summer at a depth of 0.5".

NOTE: Alternative seed mixes may be used with prior approval from the Department or Delegated Agency.

NOTE: TEMPORARY SEED MIX SHALL BE DNREC TEMPORARY MIX #3, #5, OR #6.

Source:	Symbol:	Detail No.
Delaware ESC Handbook		**DE-ESC-3.4.3** Sheet 1 of 4 Effective FEB 2019

Standard Detail & Specifications
Vegetative Stabilization

PERMANENT SEEDING AND SEEDING DATES

Optimum Seeding Dates[2]: O = Optimum Planting Period; A = Acceptable Planting Period

Mix No.	Certified Seed[3] – Well Drained Soils	Seeding Rate[1] lb/Ac	lb/1000 sq.ft.	Coastal Plain 2/1-4/30	Coastal Plain 5/1-8/14	Coastal Plain 8/15-10/31	Piedmont 3/1-4/30	Piedmont 5/1-7/31	Piedmont 8/1-10/31	All[4] 10/31-2/1	Remarks
1	Tall Fescue Weeping Lovegrass	140 10	3.2 0.23	A	O	A	A	O	A	Add 100 lbs./ac Winter Rye	Good erosion control mix Tolerant of low fertility soils Lovegrass very difficult to mow; Geminates only in hot weather
2	Deertongue Sheep Fescue Common Lespedeza[5] Inoculated	30 30 15	0.69 0.69 0.35	A	O	A	A	O	A	Add 100 lbs./ac Winter Rye	Good erosion control mix Tolerant of low fertility soils Good wildlife cover and food
3	Tall Fescue (Turf-type) **or** Strong Creeping Red Fescue **or** Perennial Ryegrass **plus** Flatpea[5]	50 50 50 15	1.15 1.15 1.15 0.34	O	A	O	O	A	O	Add 100 lbs./ac. Winter Rye	Good erosion control mix Tall Fescue for droughty conditions. Creeping Red Fescue for heavy shade. Flatpea to suppress woody vegetation.
4	Strong Creeping Red Fescue Kentucky Bluegrass Perennial Ryegrass **or** Redtop **plus** White Clover[5]	100 70 15 5 3	2.3 1.61 0.35 0.11 0.07	O	A	O	O	A	O	Add 100 lbs./ac. Winter Rye	Suitable waterway mix. Canada Bluegrass more drought tolerant. Use Redtop for increased drought tolerance.
5	Switchgrass[6,7] **or** Coastal Panicgrass Big Bluestem Little Bluestem Indian Grass	10 10 5 5 5	0.23 0.23 0.11 0.11 0.1		O			O			Native warm-season mixture. Tolerant of low fertility soils. Drought tolerant. Poor shade tolerance. N fertilizer discouraged - weeds
6	Tall Fescue (turf-type) (Blend of 3 cultivars)	150	3.5	O	A	O	O	A	O		Managed filter strip for nutrient uptake.
7	Tall Fescue Ky. Bluegrass (Blend) Perennial Ryegrass	150 20 20	3.5 0.46 0.46	O	A	O	O	A	O		Three cultivars of Kentucky Bluegrass. Traffic tolerant.
8	Big Bluestem[7] Indian Grass[7] Little Bluestem[7] Creeping Red Fescue **plus one of:** Partridge Pea Bush Clover Wild Indigo Showy Tick-Trefoil	10 10 8 30 5 3 3 2	0.23 0.23 0.18 0.69 0.11 0.07 0.07 0.05	O	A		O	A			All species are native. Indian Grass and Bluestem have fluffy seeds. Plant with a specialized native seed drill. Creeping Red Fescue will provide erosion protection while the warm season grasses get established.

NOTE: Alternative seed mixes may be used with prior approval from the Department or Delegated Agency.

Source:	Symbol:	Detail No.
Delaware ESC Handbook		**DE-ESC-3.4.3** Sheet 2 of 4 Effective FEB 2019

Standard Detail & Specifications
Vegetative Stabilization

PERMANENT SEEDING AND SEEDING DATES (cont.)

Optimum Seeding Dates[2]: O = Optimum Planting Period; A = Acceptable Planting Period

Mix No.	Certified Seed[3]	Seeding Rate[1] lb/Ac	lb/1000 sq.ft.	Coastal Plain 2/1-4/30	Coastal Plain 5/1-8/14	Coastal Plain 8/15-10/31	Piedmont 3/1-4/30	Piedmont 5/1-7/31	Piedmont 8/1-10/31	All[4] 10/31-2/1	Remarks
	Poorly Drained Soils										
9	Redtop Creeping Bentgrass Sheep Fescue Rough Bluegrass	75 35 30 45	1.72 0.8 0.69 1	O	A	O	O	A	O	Add 100 lbs./ac. Winter Rye	Quick stabilization of disturbed sites and waterways
10	Reed Canarygrass	10	0.23	A		O	A		O		Good erosion control, wildlife cover and wetland revegetation.
	Residential Lawns										
11	Tall Fescue Perennial Ryegrass Kentucky Bluegrass Blend	100 25 30	2.3 0.57 0.69	O	A	O	O	A	O		High value, high maintenance, light traffic, irrigation necessary. Well drained soils, full sun.
12	Tall Fescue Perennial Ryegrass Sheep Fescue	100 25 25	2.3 0.57 0.57	O	A	O	O	A	O		Moderate value, low maintenance, traffic tolerant
13	Creeping Red Fescue Chewings Fescue Rough Bluegrass Kentucky Bluegrass	50 50 20 20	1.15 1.15 0.4 0.4	O	A	O	O	A	O		Shade tolerant, moderate traffic tolerance, moderate maintenance.
14	Creeping Red Fescue Rough Bluegrass **or** Chewings Fescue	50 90	1.15 2.1	O	A	O	O	A	O		Shade tolerant, moisture tolerant.
15	K-31 Tall Fescue	150	3.5	O	A	O	O	A	O		Monoculture, but performs well alone in lawns. Discouraged.

1. When hydroseeding is the chosen method of application, the total rate of seed should be increased by 25%.
2. Winter seeding requires 3 tons per acre of straw mulch. Planting dates listed above are average for Delaware. These dates may require adjustment to reflect local conditions.
3. All seed shall meet the minimum purity and minimum germination percentages recommended by the Delaware Department of Agriculture. The maximum % of weed seeds shall be in accordance with Section 1, Chapter 24, Title 3 of the Delaware Code.
4. Cool season species may be planted throughout summer if soil moisture is adequate or seeded area can be irrigated.
5. All leguminous seed must be inoculated.
6. Warm season grass mix and Reed Canary Grass cannot be mowed more than 4 times per year.
7. Warm season grasses require a soil temperature of at least 50 degrees in order to germinate, and will remain dormant until then.

NOTE: Alternative seed mixes may be used with prior approval from the Department or Delegated Agency.

NOTE: PERMANENT SEED MIX SHALL BE DNREC PERMANENT MIX #9 FOR WET GROUND AREAS, AND SEED MIX #12 FOR DRY GROUND AREAS.

Source:	Symbol:	Detail No.
Delaware ESC Handbook		**DE-ESC-3.4.3** Sheet 3 of 4 Effective FEB 2019

Standard Detail & Specifications
Vegetative Stabilization

Construction Notes:

1. Site Preparation

a. Prior to seeding, install needed erosion and sediment control practices such as diversions, grade stabilization structures, berms, dikes, grassed waterways, and sediment basins.

b. Final grading and shaping is not necessary for temporary seedings.

2. Seedbed Preparation

It is important to prepare a good seedbed to insure the success of establishing vegetation. The seedbed should be well prepared, loose, uniform, and free of large clods, rocks, and other objectionable material. The soil surface should not be compacted or crusted.

3. Soil Amendments

a. Lime - Apply liming materials based on the recommendations of a **soil test** in accordance with the approved nutrient management plan. If a nutrient management plan is not required, apply dolomitic limestone at the rate of 1 to 2 tons per acre. Apply limestone uniformly and incorporate into the top 4 to 6 inches of soil.

b. Fertilizer - Apply fertilizer based on the recommendations of a **soil test** in accordance with the approved nutrient management plan. If a nutrient management plan is not required, apply a formulation of 10-10-10 at the rate of 600 pounds per acre. Apply fertilizer uniformly and incorporate into the top 4 to 6 inches of soils.

4. Seeding

a. For **temporary stabilization**, select a mixture from **Sheet 1**. For a **permanent stabilization**, select a mixture from **Sheet 2** or **Sheet 3** depending on the conditions. Alternative seed mixes may be used with prior approval from the Department or Delegated Agency.

b. Apply seed uniformly with a broadcast seeder, drill, cultipacker seeder or hydroseeder. All seed will be applied at the recommended rate and planting depth.

c. Seed that has been broadcast should be covered by raking or dragging and then lightly tamped into place using a roller or cultipacker. If hydroseeding is used and the seed and fertilizer is mixed, they will be mixed on site and the seeding shall be done immediately and without interruption.

5. Mulching

All mulching shall be done in accordance with detail **DE-ESC-3.4.5**.

Source:	Symbol:	Detail No.
Delaware ESC Handbook		**DE-ESC-3.4.3** Sheet 4 of 4 Effective FEB 2019

This drawing is the property of Century Engineering, Inc. and is prepared for the exclusive use of its clients at the location indicated. No other use is authorized or intended.

CENTURY ENGINEERING, INC.
ADDRESS: 550 BAY ROAD DOVER, DE 19901 P: (302) 734-9188 F: (302) 734-4589
WEBSITE: www.centuryeng.com
EMAIL: cei@centuryeng.com

REVISIONS

ADDENDUM

DESCRIPTION	DATE

PROJECT

CONSTRUCTION PLANS FOR DELAWARE DIVISION OF FISH & WILDLIFE WAGAMONS POND BOAT RAMP RECONSTRUCTION BROADKILL HUNDRED, SUSSEX COUNTY, DELAWARE

SHEET TITLE

EROSION & SEDIMENT CONTROL DETAILS

DIV. OF FISH AND WILDLIFE 100% SUBMISSION
MAY, 2020

DRAWN	CHK'D/DESIGNER
DFS/MDS	AES
SCALE 1" = 30'	SHEET NO. C110
PROJECT NO. 175013.44	

G:\Projects\175013.00 DNREC 2017 Engineering QE\175013.44 (Wagamons Pond Boat Ramp)\CADD FILES\Sheets\C108,109,110,111 - E&S Details.dwg, 5/5/2020 12:11 PM

Standard Detail & Specifications
Turbidity Curtain

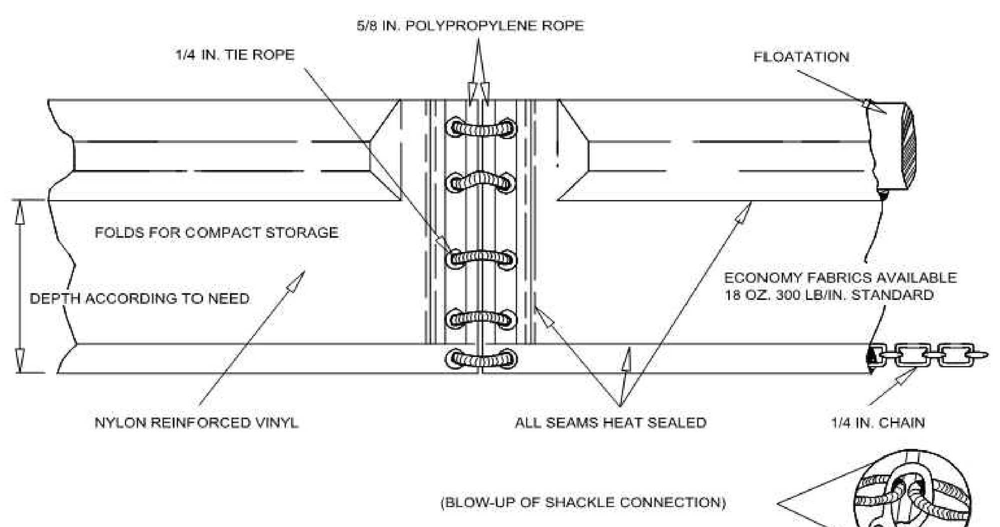

Typical Section - Type 1

DATA
Curtain type (1,2, or 3)
Layout (Std. or Alt.)

Source:	Symbol:	Detail No.
Adapt. from Amer. Boom and Barrier Corp.	TC-(1/2/3) (Std/Alt)	DE-ESC-3.5.3 Sheet 1 of 8 Effective FEB 2019

Standard Detail & Specifications
Turbidity Curtain

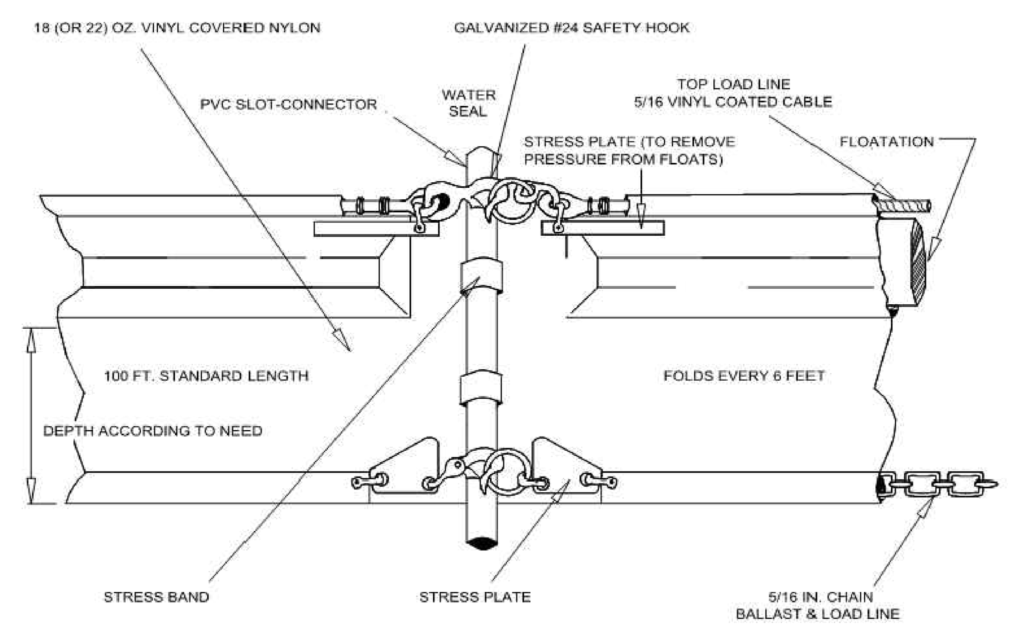

Typical Section - Type 2

DATA
Curtain type (1, 2, or 3)
Layout (Std. or Alt.)

Source:	Symbol:	Detail No.
Adapt. from Amer. Boom and Barrier Corp.	TC-(1/2/3) (Std/Alt)	DE-ESC-3.5.3 Sheet 2 of 8 Effective FEB 2019

Standard Detail & Specifications
Turbidity Curtain

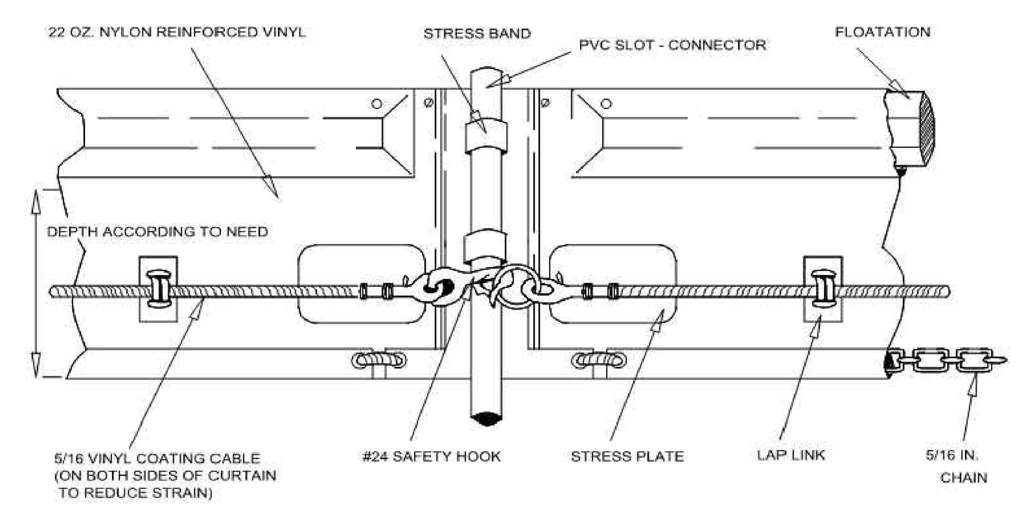

Typical Section - Type 3

DATA
Curtain type (1, 2, or 3)
Layout (Std. or Alt.)

Source:	Symbol:	Detail No.
Adapt. from Amer. Boom and Barrier Corp.	TC-(1/2/3) (Std/Alt)	DE-ESC-3.5.3 Sheet 3 of 8 Effective FEB 2019

Standard Detail & Specifications
Turbidity Curtain

NOTE: The standard layout shown is intended for use in streams, ponds and other non-tidal waters

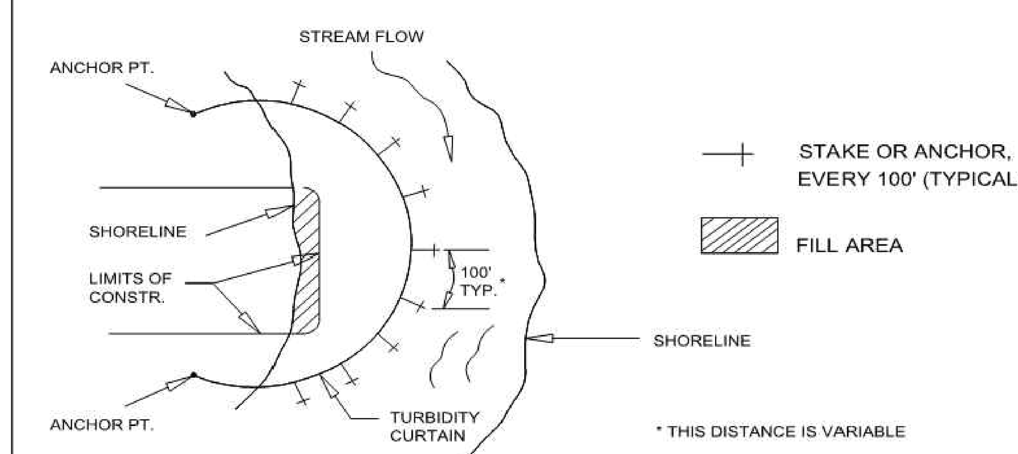

Plan - Std. Layout

Source:	Symbol:	Detail No.
Adapt. from Amer. Boom and Barrier Corp.	TC-(1/2/3) (Std/Alt)	DE-ESC-3.5.3 Sheet 4 of 8 Effective FEB 2019

Standard Detail & Specifications
Turbidity Curtain

NOTE: The alternative layout shown is intended for tidal waters and/or heavy wind and wave action

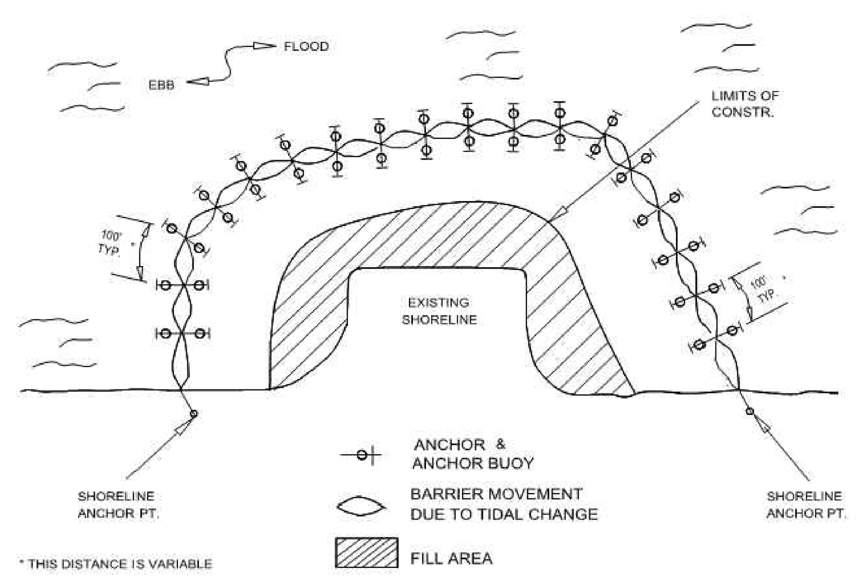

Plan - Alt. Layout

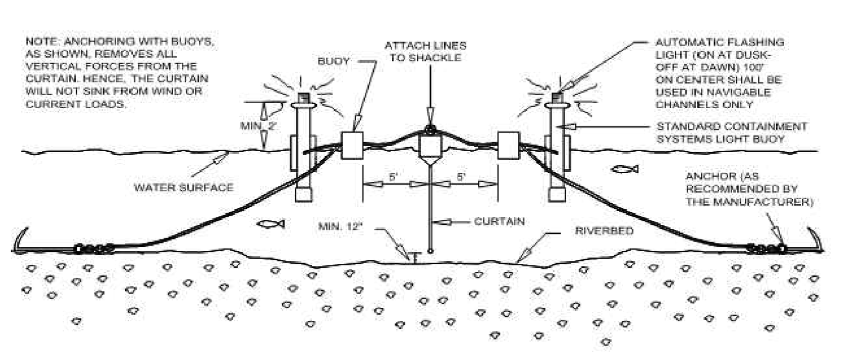

Additional Requirements for Navigable Waters

Source:	Symbol:	Detail No.
Adapt. from Amer. Boom and Barrier Corp.	TC-(1/2/3) (Std/Alt)	DE-ESC-3.5.3 Sheet 5 of 8 Effective FEB 2019

Standard Detail & Specifications
Turbidity Curtain

Construction Notes:

1. **Materials**
   a. Barriers should be a bright color (yellow or "international" orange are recommended) that will attract the attention of nearby boaters.
   b. The curtain fabric shall meet manufacturer's recommendations for the application.
   c. Seams in the fabric shall be either vulcanized welded or sewn and shall develop the full strength of the fabric.
   d. Floatation devices shall be flexible, buoyant units contained in an individual floatation sleeve or collar attached to the curtain. Buoyancy provided by the floatation units shall be sufficient to support the weight of the curtain and maintain a freeboard of at least 3 inches above the water surface level.
   e. Load lines must be fabricated into the bottom of all floating turbidity curtains. Type II and Type III must have load lines also fabricated into the top of the fabric. The top load line shall consist of woven webbing or vinyl-sheathed steel cable and shall have a break strength in excess of 10,000 pounds. The supplemental (bottom) load line shall consist of a chain incorporated into the bottom hem of the curtain of sufficient weight to serve as ballast to hold the curtain in a vertical position. Additional anchorage shall be provided as necessary. The load lines shall have suitable connecting devices which develop the full breaking strength for connection to load lines in adjacent sections as shown in the detail.
   f. External anchors may consist of wooden or metal stakes (2- x 4-inch or 2-1/2-inch minimum diameter wood or 1.33 lbs/linear foot steel) when Type I installation is used; when Type II or Type III installations are used, bottom anchors should be used.
   g. Bottom anchors must be sufficient to hold the curtain in the same position relative to the bottom of the watercourse without interfering withthe action of the curtain. The anchor may dig into the bottom (grappling hook, plow or fluke-type) or may be weighted (mushroom type) and should be attached to a floating anchor buoy via an anchor line. The anchor line should then run from the buoy to the to load line of the curtain. When used with Type III installations, these lines must contain enough slack to allow the buoy and curtain to float freely with tidal changes without pulling the buoy or curtain down and must be checked regularly to make sure they do not become entangled with debris. As previously noted, anchor spacing will vary with current velocity and potential wind and wave action; manufacturer's recommendations should be followed. See detail for orientation of external anchors and anchor buoys for tidal installations.

Source:	Symbol:	Detail No.
Adapt. from Amer. Boom and Barrier Corp.	TC-(1/2/3) (Std/Alt)	DE-ESC-3.5.3 Sheet 6 of 8 Effective FEB 2019

Standard Detail & Specifications
Turbidity Curtain

Construction Notes (cont.)

2. **Installation**
   a. In the calm water of lakes or ponds (Type I installation) it is usually sufficient to set the curtain end stakes or anchor points (using anchor buoys if bottom anchors are employed), then tow the curtain in the furled condition out and attach it to the stakes or anchor points. Following this, any additional stakes or buoyed anchors required to maintain the desired location of the curtain may be set and these anchor points made fast to the curtain. Only then shall the furling lines be cut to allow the curtain skirt to drop.
   b. In rivers or in other moving waters (Type II and Type III installations) it is important to set all curtain anchor points. Care must be taken to ensure that anchor points are of sufficient holding power to retain the curtain under the existing current conditions, prior to putting the furled curtain into the water. Anchor buoys should be employed on all anchors to prevent the current from submerging the flotation at the anchor points. If the curtain is being installed into tidal areas which would be subject to currents in both directions, anchors should be provided on both sides of the curtain. This will minimize curtain movement and prevent the curtain from overrunning the anchors during tide reversals. After the anchors have been secured, the furled curtain should be secured to the upstream anchor point and then sequentially attached to each next downstream anchor point until the entire curtain is in position. Before unfurling, the "lay" of the curtain should be assessed and any necessary adjustments made to the anchors. Once the location has been deemed adequate, the furling lines may be cut to allow the skirt to drop.
   c. Anchor lines should be attached to the flotation device, not to the bottom of the curtain. The anchoring line attached to the flotation device on the downstream side will provide support for the curtain. Attaching the anchors to the bottom of the curtain could cause premature failure of the curtain due to the stresses imparted on the middle section of the curtain.
   d. Turbidity curtain shall not be installed across channel flows unless there is a danger of causing sediment deposition to occur in the middle of a watercourse, thereby blocking access or creating a sand bar. In such situations, the curtain may be installed so as to form a long-sided, sharp "V" to deflect clean water around a work site, confining most of the silt-laden water to the work area inside the "V" and directing it to the shoreline. In no case shall the curtain be installed perpendicular to the channel flow.

Source:	Symbol:	Detail No.
Adapt. from Amer. Boom and Barrier Corp.	TC-(1/2/3) (Std/Alt)	DE-ESC-3.5.3 Sheet 7 of 8 Effective FEB 2019

Standard Detail & Specifications
Turbidity Curtain

Construction Notes (cont.)

3. **Maintenance**
   a. The individual(s) identified on the plan as responsible for maintenance of the curtain shall do so for the duration of the project in order to ensure the continuous protection of the watercourse.
   b. Should repairs to the geotextile fabric become necessary, repair kits are generally available from the manufacturer. The manufacturer's instructions must be followed to ensure the adequacy of the repair.
   c. When the curtain is no longer required as determined by the inspector, the curtain and related components shall be removed in such a manner as to minimize turbidity. Remaining sediment shall be sufficiently settled before removing the curtain. Sediment may be removed and the original depth (or plan elevation) restored. Any spoils must be taken to an approved upland disposal area and stabilized in accordance with the approved plan.

4. **Removal**
   a. Care shall be taken to protect the skirt from damage as the turbidity curtain is dragged from the watercourse.
   b. The site selected to bring the curtain ashore should be free of sharp rocks, broken cement, debris, etc. so as to minimize damage when hauling the curtain over the area.
   c. If the curtain has a deep skirt, it can be further protected by running a small boat along its length with a crew installing furling lines before attempting to remove the curtain from the water.

Source:	Symbol:	Detail No.
Adapt. from Amer. Boom and Barrier Corp.	TC-(1/2/3) (Std/Alt)	DE-ESC-3.5.3 Sheet 8 of 8 Effective FEB 2019

This drawing is the property of Century Engineering, Inc. and is prepared for the exclusive use of its clients at the location indicated. No other use is authorized or intended.

CENTURY ENGINEERING, INC.
ADDRESS: 550 BAY ROAD DOVER, DE 19901
P: (302) 734-9188 F: (302) 734-4589
WEBSITE: www.centuryeng.com
EMAIL: cei@centuryeng.com

REVISIONS

ADDENDUM

DESCRIPTION	DATE

PROJECT

CONSTRUCTION PLANS FOR DELAWARE DIVISION OF FISH & WILDLIFE
WAGAMONS POND BOAT RAMP RECONSTRUCTION
BROADKILL HUNDRED, SUSSEX COUNTY, DELAWARE

SHEET TITLE

EROSION & SEDIMENT CONTROL DETAILS

DIV. OF FISH AND WILDLIFE
100% SUBMISSION
MAY, 2020

DRAWN	CHK'D/DESIGNER
DFS/MDS	AES
SCALE	SHEET NO.
1" = 30'	C111
PROJECT NO. 175013.44	

ALEXANDER E. SCHMIDT LICENSE No. 16439 DELAWARE PROFESSIONAL ENGINEER