CENTURY ENGINEERING

550 Bay Road
Dover, DE 19901
t 302.734.9188 centuryeng.com

November 10, 2020

Garrisons Lake Boat Ramp Reconstruction
DFW Contract No. NAT20001-Garrisons
Addendum 3: Drawing Revisions

1. The following drawing revisions were made to include treated wood bollards to the parking area:

    a. Sheet C103; Revision 3; Adjusted Compost Filter Log, Limit of Disturbance/Limit of Construction; added 19 treated wood bollards to parking area site plan and added detail 3/C103 for treated wood bollard layout; 11-10-2020

    b. Sheet C106: Revision 1; Added treated wood bollard detail 9/C106; 11-10-2020

John Sclesky, P.E.

Century Engineering

CONSTRUCTION PLANS

FOR

DELAWARE DIVISION OF FISH & WILDLIFE

GARRISON'S LAKE BOAT RAMP RECONSTRUCTION

T.P. #: LC-00-037.03-03-58.00

US 13, NORTH DUPONT HIGHWAY & MESSINA HILL ROAD

LITTLE CREEK HUNDRED, KENT COUNTY, DELAWARE

DFW CONTRACT #: NAT20001-GARRISONS

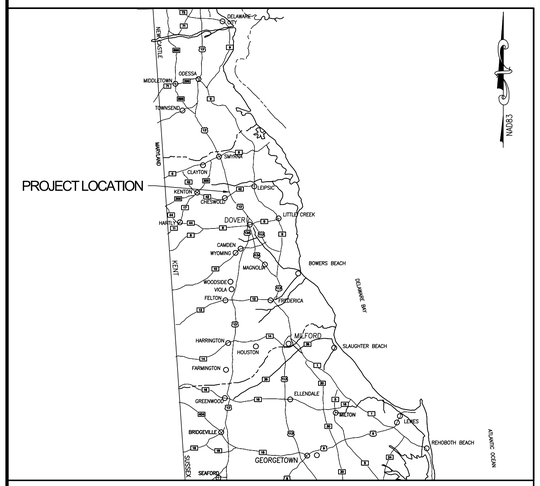

LOCATION MAP — SCALE: 1" =10 MILES

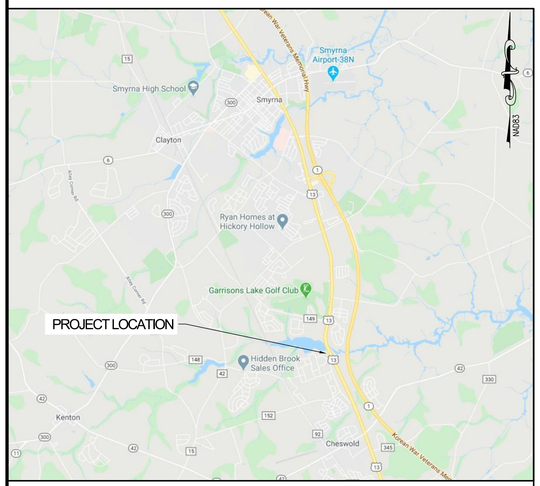

AREA MAP — SCALE: 1" = 1 MILE

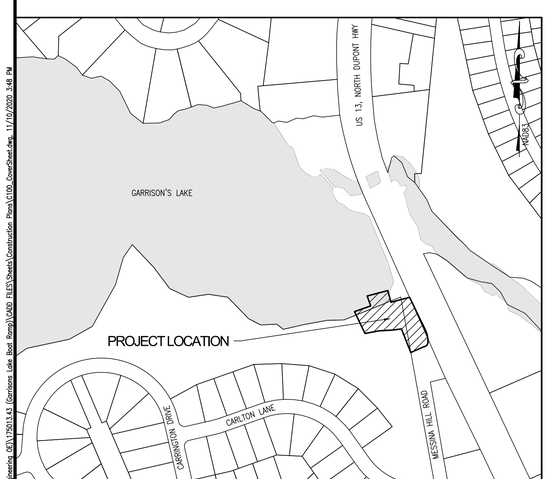

SITE MAP — SCALE: 1" = 300'

SOIL MAP — NOT TO SCALE

SOIL LEGEND

DocB =	DOWNER SANDY LOAM, 2 TO 5 PERCENT SLOPES, MID-ATLANTIC COASTAL PLAIN
Za =	ZEKIAH SANDY LOAM, FREQUENTLY FLOODED
W=	WATER

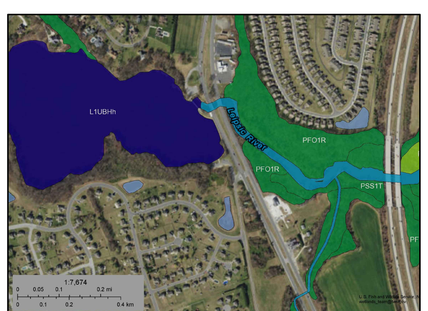

WETLAND MAP — NOT TO SCALE

WETLAND LEGEND

L1UBHh =	LACUSTRINE SYSTEM, LIMNETIC SUBSYSTEM, WITH UNCONSOLIDATED BOTTOM, PERMANENTLY FLOODED DUE TO DOWNSTREAM IMPOUNDMENT.
PFO1R =	PALUSTRINE SYSTEM, WITH 6' OR TALLER FORESTED WOODY VEGETATION, WITH BROAD-LEAVED DECIDUOUS, AND SEASONALLY FLOODED-TIDAL.
PSS1T =	PALUSTRINE SYSTEM, WITH 6' OR SHORTER WOODY VEGETATION, WITH BROAD-LEAVED DECIDUOUS, AND SEMIPERMANENTLY FLOODED-TIDAL.

INDEX OF SHEETS

C100	COVERSHEET
C101	LEGEND, PROJECT NOTES & TYPICAL SECTIONS
C102	EXISTING CONDITIONS & DEMOLITION PLAN
C103	CONSTRUCTION LAYOUT PLAN
C104	FIXED DOCK DETAILS SHEET
C105	BOAT RAMP DETAILS SHEET
C106	CONSTRUCTION DETAILS
C107-C110	EROSION & SEDIMENT CONTROL DETAILS

WETLANDS PERMITTING

A PERMIT NUMBER, CENAP-OP-2020-230-85 (NWP36), FROM THE UNITED STATES ARMY CORPS OF ENGINEERS WAS OBTAINED TO PERMIT THE DISTURBANCES TO EXISTING FEDERALLY REGULATED WATERS OF THE UNITED STATES. A SUBAQUEOUS LANDS PERMIT FROM THE DNREC WETLANDS AND SUBAQUEOUS LANDS SECTION WILL BE SOUGHT FOR IMPACTS TO THE EXISTING STATE SUBAQUEOUS LANDS.

DATA COLUMN

1. TAX PARCEL NUMBER: LC-00-037.03-03-58.00
2. KENT COUNTY FILE NUMBER: _____
3. ADDRESS OF SITE: 927 MESSINA HILL ROAD, DOVER DE, 19901
4. ZONING: AC: AGRICULTURAL CONSERVATION
5. SOURCE OF TITLE: D.B. 58-79
6. NUMBER OF LOTS: 1
7. SETBACK LINES:

	REQUIRED
FRONT YARD:	75'
SIDE YARD:	25' (60' TOTAL)
REAR YARD:	40'
MIN LOT WIDTH:	150'

8. LOT AREA: 40.30± ACRES (BASED ON KENT COUNTY GIS MAPPING)
9. EXISTING USE: BOAT RAMP/PARKING LOT
10. PROPOSED USE: BOAT RAMP/PARKING LOT
11. TOTAL NUMBER OF LOTS: 1 (NO NEW BUILDING LOTS OR DWELLINGS PROPOSED BY THIS PLAN)
12. PROPOSED BUILDING SQUARE FOOTAGE: 0 S.F.
13. MONUMENTS:
    EXISTING: 0 (MONUMENT)
    PROPOSED: 0 (MONUMENT)
14. ELECTRIC PROVIDER: NO ELECTRIC PROPOSED FOR SITE
15. SEWER PROVIDER: NO SEWER PROPOSED FOR SITE
16. WATER PROVIDER: NO ON-SITE WELL OR WATER SOURCE PROPOSED FOR SITE
17. PARKING:
    REQUIRED: N/A
    PROPOSED: 15 SPACES
18. SITE BREAKDOWN (WITHIN PROJECT LOC):

EXISTING SITE	
OPEN SPACE:	9,504.41 ± S.F.
WATER:	2,097.38 ± S.F.
ASPHALT:	7,684.34 ± S.F.
CONCRETE:	1,600.64 ± S.F.
OVERALL TOTAL:	20,886.77 ± S.F.

PROPOSED SITE	
OPEN SPACE:	8,979.70 ± S.F.
WATER:	2,097.38 ± S.F.
ASPHALT:	7,956.92 ± S.F.
CONCRETE:	1,852.77 ± S.F.
OVERALL TOTAL:	20,886.77 ± S.F.

18. WETLANDS:
    A WETLANDS INVESTIGATION HAS BEEN PERFORMED ON THE SUBJECT PROPERTY BY CENTURY ENGINEERING, INC. IN OCTOBER, 2019.
19. FLOODPLAIN:
    PER FEMA MAP NO.10001C0152J, DATED JULY 7, 2014, THE SUBJECT PARCEL IS DETERMINED TO BE WITHIN ZONE AE (BASE FLOOD ELEVATION DETERMINED: ELEV.: 11).
20. GROWTH ZONE:
    THE SUBJECT PARCEL LIES WITHIN THE DESIGNATED GROWTH ZONE.
21. BOUNDARY:
    NO BOUNDARY SURVEY HAS BEEN COMPLETED.
22. TOPOGRAPHY:
    TOPOGRAPHY SHOWN FROM A SURVEY PERFORMED BY CENTURY ENGINEERING, INC. IN OCTOBER, 2019.
23. DATUM: NAD83
24. TOTAL LOD OF SITE: 19,069.49 S.F. (NO SEDIMENT & STORMWATER MANAGEMENT APPROVAL REQUIRED)
25. SITE BENCHMARK: TRAVERSE POINT #1
    SEE SHEET C102 FOR LOCATION
26. OWNER:
    LAKESHORE VILLAGE HOMEOWNERS
    PO BOX 97
    CHESWOLD, DE 19936
    927 MESSINA HILL ROAD
    NOTE: PER AN EASEMENT AGREEMENT BETWEEN GOLDINGER BROTHERS INCORPORATED AND THE STATE OF DELAWARE DATED AUGUST 28, 1963, THE DIVISION OF FISH & WILDLIFE HAS CONFIRMED PERMISSION TO ERECT, MAINTAIN, AND OPERATE FACILITIES.
27. APPLICANT:
    STATE OF DELAWARE
    DIVISION OF FISH & WILDLIFE
    89 KINGS HIGHWAY
    DOVER, DE 19901
    JEREMEY ASHE
    (302) 735-3601
28. ENGINEER:
    CENTURY ENGINEERING, INC.
    550 BAY ROAD
    DOVER, DE 19901
    ALEXANDER SCHMIDT, P.E.
    (302) 734-9188

CERTIFICATION OF OWNER

I, JEREMEY ASHE, HEREBY CERTIFY THAT DIVISION OF FISH & WILDLIFE IS THE OWNER OF THE PROPERTY DESCRIBED AND SHOWN ON THIS PLAN, THAT THE PLAN WAS MADE AT MY DIRECTION, AND THAT I ACKNOWLEDGE THE SAME TO ME BY ACT AND DESIRE THE PLAN TO BE DEVELOPED AS SHOWN IN ACCORDANCE WITH ALL APPLICABLE LAWS AND REGULATIONS.

JEREMEY ASHE- CONSTRUCTION MANAGER — DATE
DELAWARE DIVISION OF FISH & WILDLIFE
89 KINGS HIGHWAY
DOVER, DE 19901
PHONE: (302) 735-3601

CERTIFICATION OF APPLICANT

I, JEREMEY ASHE, HEREBY CERTIFY THAT DELAWARE DIVISION OF FISH & WILDLIFE IS THE APPLICANT OF THE PROPERTY DESCRIBED AND SHOWN ON THIS PLAN, THAT THE PLAN WAS MADE AT MY DIRECTION, AND THAT I ACKNOWLEDGE THE SAME TO ME BY ACT AND DESIRE THE PLAN TO BE DEVELOPED AS SHOWN IN ACCORDANCE WITH ALL APPLICABLE LAWS AND REGULATIONS.

JEREMEY ASHE – CONSTRUCTION MANAGER — DATE
DELAWARE DIVISION OF FISH & WILDLIFE
89 KINGS HIGHWAY
DOVER, DE 19901
PHONE: (302) 735-3601

CERTIFICATION OF PLAN ACCURACY

I, ALEXANDER SCHMIDT, HEREBY CERTIFY THAT THIS PLAN HAS BEEN PREPARED UNDER MY SUPERVISION AND TO THE BEST OF MY KNOWLEDGE COMPLIES WITH THE APPLICABLE STATE AND LOCAL REGULATIONS AND ORDINANCES.

ALEXANDER E. SCHMIDT, P.E., DE NO. 16139 — DATE
CENTURY ENGINEERING, INC.
550 BAY ROAD
DOVER, DELAWARE 19901
PHONE: (302) 734-9188 / FAX: (302) 734-4589

This drawing is the property of Century Engineering, Inc. and is prepared for the exclusive use of its clients at the location indicated. No other use is authorized or intended.

CENTURY ENGINEERING, INC.
ADDRESS: 550 BAY ROAD DOVER, DE 19901
P: (302) 734-9188 F: (302) 734-4589
WEBSITE: www.centuryeng.com
EMAIL: ce@centuryeng.com

REVISIONS

ADDENDUM

DESCRIPTION	DATE

PROJECT: CONSTRUCTION PLANS FOR DELAWARE DIVISION OF FISH & WILDLIFE GARRISON'S LAKE BOAT RAMP RECONSTRUCTION LITTLE CREEK HUNDRED, KENT COUNTY, DELAWARE

SHEET TITLE: COVERSHEET

DIV. OF FISH AND WILDLIFE BID SET

OCTOBER, 2020

DRAWN	CHK'D/DESIGNER
ECM	AES
SCALE	SHEET NO.
AS NOTED	C100

PROJECT NO. 175013.43

G:\Projects\175013.00 (NAVFAC 2017 Engineering QST)\175013.43 (Garrisons Lake Boat Ramp)\CADD FILES\Sheets\Construction Plans\C100_CoverSheet.dwg, 11/10/2020 3:48 PM

LEGEND

	EXISTING	PROPOSED
PROPERTY LINE		N/A
RIGHT OF WAY	RW — RW	N/A
BUILDING SETBACK		N/A
CONTOUR		10
WETLAND LINE		N/A
ORDINARY HIGH WATER MARK	OHW — OHW	N/A
SIGN		
UTILITY POLE		N/A
PAVEMENT		
OVERLAY PAVEMENT	N/A	
REMOVABLE BOLLARD	N/A	•
CONCRETE AREA		
FIXED DOCK	N/A	
RIP RAP		
DE #3 STONE	N/A	
TIMBER SUPPORT PILE	N/A	●
TEMPORARY SHEET PILE	N/A	
LIMITS OF CONSTRUCTION	N/A	LOC — LOC
LIMITS OF DISTURBANCE	N/A	LOD — LOD
GUY WIRE		N/A
TOP OF BANK	TOB — TOB	N/A
BOTTOM OF BANK	BOB — BOB	N/A
SAWCUT	N/A	SAW — SAW
100-YR FLOOD PLAIN	FP	N/A
STEEL BEAM GUARDRAIL		N/A
UNDERGROUND GAS	UG-G — UG-G — UG-G	N/A
UNDERGROUND TELEPHONE	UG-T — UG-T	N/A
OVERHEAD ELECTRIC	OH-E — OH-E	N/A
SILT FENCE	N/A	SF — SF
STOCKPILE AREA	N/A	SP — SP
PORTABLE SEDIMENT TANK	N/A	PST
PUMPING PIT	N/A	PP-2
COMPOST FILTER LOG	N/A	CFL — CFL
GAS VALVE	G.V.	N/A
P.C.C. CURB	N/A	
TREATED WOOD BOLLARD	N/A	■

IDENTIFIERS: RM/C REMOVE BY CONTRACTOR

STRUCTURAL NOTES

DESIGN AND CONSTRUCTION SPECIFICATIONS:

1. LOADS:
   1.1. LIVE LOAD – FIXED DOCKS: 40 POUNDS PER SQUARE FOOT WITH A MAXIMUM DEFLECTION OF L/180.
2. MATERIALS:
   2.1. ALUMINUM:
   2.1.1. ALL STRUCTURAL ALUMINUM IS ALLOY 6061-T6, MILL FINISH.
   2.1.2. ALL WELDED FABRICATION IN ACCORDANCE WITH AWS D1.2, UNLESS NOTED OTHERWISE. FILLER METAL TO BE 5356 SERIES WIRE.
   2.2. REINFORCING STEEL:
   2.2.1. ALL REINFORCING STEEL SHALL BE AASHTO M31, (ASTM A615), GRADE 60.
   2.2.2. ALL REINFORCING STEEL SHALL BE EPOXY COATED IN ACCORDANCE WITH AASHTO M284.
   2.3. TIMBER:
   2.3.1. PILES SHALL BE CLASS B SOUTHERN YELLOW PINE IN ACCORDANCE WITH ASTM D25.
   2.3.2. DIMENSION LUMBER SHALL BE SOUTHERN YELLOW PINE, NO. 2 OR BETTER.
   2.3.3. ALL PILES AND DIMENSION LUMBER SHALL BE TREATED WITH CHROMATED COPPER ARSENATE (CCA) WITH A MINIMUM RETENTION OF 2.5 POUNDS PER CUBIC FOOT.
   2.4. CONCRETE:
   2.4.1. ALL EXPOSED CONCRETE PAD EDGES SHALL HAVE A 1" CHAMFER.
   2.4.2. AN OPTIONAL TRANSVERSE CONSTRUCTION JOINT MAY BE PLACED AT THE MID-SPAN OF THE BOAT RAMP AS SHOWN.
   2.4.3. ALL CONCRETE WORK SHALL BE IN ACCORDANCE WITH SECTION 610 OF THE DELDOT STANDARD SPECIFICATIONS FOR ROAD AND BRIDGE CONSTRUCTION (DATED AUGUST 2016) UNLESS OTHERWISE NOTED.
   2.4.4. SUBMIT CONCRETE MIX DESIGNS FOR REVIEW AND APPROVAL PRIOR TO STARTING WORK. ALL CONCRETE SHALL USE A DELDOT APPROVED MIX.
   2.4.5. CONCRETE DESIGN MIXES/STRENGTHS SHALL HAVE A MINIMUM COMPRESSIVE STRENGTH OF F'C = 4,500 PSI. ALL CONCRETE SHALL CONTAIN A WATER-REDUCING ADMIXTURE. CALCIUM CHLORIDE IS PROHIBITED.
   2.4.6. CONCRETE FOR RAMP SHALL BE DELDOT CLASS A (F'C = 4,500 PSI) AND SHALL CONFORM TO SECTION 610004 – PORTLAND CEMENT MASONRY, ABUTMENT ABOVE FOOTING, CLASS A.
   2.4.7. UNLESS OTHERWISE SHOWN, CONCRETE COVER OVER REINFORCEMENT SHALL BE 1" FOR INTERIOR FACE OF WALLS NOT EXPOSED TO EARTH, 2" FOR EXTERIOR FACE OF WALLS, 3" FOR FOOTINGS AND OTHER STRUCTURAL CONCRETE DEPOSITED AGAINST GROUND, 2" FOR CONCRETE PERMANENTLY EXPOSED TO EARTH OR WEATHER, AND 0.75" FOR SLABS.
   2.4.8. NO CONCRETE SHALL BE PLACED IN WATER OR ON FROZEN SUBGRADE.
   2.4.9. THE REQUIRED AIR CONTENT FOR ALL CONCRETE SHALL BETWEEN 3% AND 7%.
   2.4.10. PROOF ROLL SUBGRADES FOR PAVED AREAS UNDER THE DIRECTION OF THE INSPECTION AGENCY. REMOVE ALL UNSUITABLE AREAS AND REPLACE WITH COMPACTED STRUCTURAL FILL MATERIALS. PLACE FILL IN 6" LIFTS AND COMPACT FILL TO AT LEAST 95% OF THE MAXIMUM DENSITY AS DETERMINED BY THE ASTM D1557 MODIFIED PROCTOR TEST. FILL MATERIAL SHALL BE SM OR BETTER AS CLASSIFIED PER ASTM D2487.
   2.4.11. CONCRETE SHALL BE POURED WITHIN 24 HOURS OF EXCAVATION UNLESS APPROVED BY THE ENGINEER.
3. CONNECTIONS:
   3.1. ALL BOLTS AND NAILS SHALL BE HOT-DIPPED GALVANIZED IN ACCORDANCE WITH ASTM A153, AASHTO M232 OR STAINLESS STEEL IN ACCORDANCE WITH ASTM A316, AS SHOWN ON THE PLANS.
   3.2. BOLTED CONNECTIONS THAT ARE EXPOSED TO PEDESTRIANS SHALL BE POSITIONED SUCH THAT THE BOLT HEADS FACE THE DECK AND NUTS FACE AWAY FROM THE THE PUBLIC.
4. CONTRACTOR SHALL PROVIDE DEWATERING SYSTEM AS NECESSARY FOR CONSTRUCTION OF BOAT RAMP AND FIXED DOCK. CONTRACTOR SHALL OBTAIN ANY NECESSARY DEWATERING PERMITS. DEWATERING SYSTEM SHALL BE INCIDENTAL TO THE CONTRACT.
5. ALL DOCK HARDWARE IS TO BE STAINLESS STEEL, SERIES 304.
6. ALL DOCKS, HEADER CHANNELS, RAILING, AND ANCILLARY ITEMS SHALL BE PROVIDED BY THE OWNER.
7. THE NOTES ON THESE DRAWINGS ARE NOT INTENDED TO REPLACE SPECIFICATIONS. SEE SPECIFICATIONS FOR REQUIREMENTS IN ADDITION TO GENERAL NOTES. FOR INCONSISTENCIES BETWEEN THESE DRAWINGS AND THE SPECIFICATIONS, THE STRICTER REQUIREMENT SHALL APPLY, AND THE ENGINEER SHALL BE NOTIFIED PRIOR TO PROCEEDIN6 WITH THE AFFECTED PORTION OF THE WORK.
8. THE STRUCTURE IS DESIGNED TO BE SELF SUPPORTING AND STABLE AFTER THE CONSTRUCTION IS COMPLETE. IT IS THE CONTRACTOR'S SOLE RESPONSIBILITY TO DETERMINE ERECTION PROCEDURES AND SEQUENCE TO ENSURE THE SAFETY OF THE STRUCTURE AND ITS COMPONENTS DURING ERECTION. THIS INCLUDES, BUT IS NOT LIMITED TO, THE ADDITION OF NECESSARY SHORING, SHEETING, TEMPORARY BRACING, GUYS OR TIE DOWNS. PROVIDE ALL SHORING AND BRACING REQUIRED TO STABILIZE AND PROTECT EXISTING AND ADJACENT STRUCTURES AND SYSTEMS DURING COURSE OF DEMOLITION AND CONSTRUCTION. SUCH MATERIAL SHALL REMAIN THE PROPERTY OF THE CONTRACTOR AFTER COMPLETION OF THE PROJECT.
9. SECTIONS AND DETAILS SHOWN ON ANY STRUCTURAL DRAWINGS SHALL BE CONSIDERED TYPICAL FOR SIMILAR CONDITIONS.
10. ALL APPLICABLE FEDERAL, STATE AND MUNICIPAL REGULATIONS SHALL BE FOLLOWED, INCLUDING THE FEDERAL DEPARTMENT OF LABOR OCCUPATIONAL SAFETY AND HEALTH ACT.
11. ANY AND ALL MODIFICATIONS TO THE STRUCTURAL ELEMENTS INDICATED ON THESE DRAWINGS MUST BE APPROVED IN ADVANCE BY THE ENGINEER.

PILE INSTALLATION NOTES

1. FULL TIME INSPECTION OF THE PILE INSTALLATION SHALL BE PROVIDED BY OWNER AND PERFORMED BY AN ENGINEER OR EXPERIENCED FOUNDATION INSPECTOR REGISTERED AS A PROFESSIONAL ENGINEER IN THE STATE OF DELAWARE TO ESTABLISH AN ACCURATE RECORD OF PILE DRIVING. INSPECTION SHOULD VERIFY THAT SUITABLE PILES ARE BEING INSTALLED. RECORDS SHALL INCLUDE PROJECT NAME AND NUMBER, NAME OF CONTRACTOR, PILE LOCATION AND NUMBER, COMPUTED PILE CAPACITY, TYPE AND SIZE OF HAMMER USED, TYPE OF PILE DRIVING CAP USED, RATE OF OPERATION OF PILE DRIVING EQUIPMENT, PILE DIMENSIONS, ELEVATION OF TIP, ELEVATION OF BUTT BEFORE AND AFTER CUT-OFF, GROUND ELEVATION, CONTINUOUS RECORD OF NUMBER OF BLOWS FOR EACH FOOT OF PENETRATION, PLUMBNESS, HORIZONTAL LOCATION, PILE UPLIFT AND ANY UNUSUAL OCCURRENCES DURING PILE DRIVING.
2. ALL TIMBER SUPPORT PILES SHALL BE DRIVEN IN THE LOCATIONS SHOWN ON THE PLANS WITHIN THE FOLLOWING TOLERANCES. DEVIATION OF THE LOCATION OF THE TOP OF A PILE FROM THAT SHOWN ON PLANS SHALL NOT EXCEED 2 INCHES AFTER INITIAL DRIVING, AND 4 INCHES AFTER DRIVING IS COMPLETED. PILES SHALL BE DRIVEN WITH A MAXIMUM DEVIATION FROM VERTICAL OF 1 INCH IN 48 INCHES OF PILE LENGTH.

SECTION/DETAIL/MATERIALS

(1) SUPERPAVE TYPE C, PG 64-22, (ITEM NO. 401005)
(2) SUPERPAVE TYPE B, PG 64-22, (ITEM NO. 401014)
(3) GRADED AGGREGATE BASE COURSE, TYPE B, (ITEM NO. 301001)
(4) BORROW, TYPE B, MAXIMUM 8" LIFTS, COMPACTION: 95% OF MAXIMUM DENSITY PER MODIFIED PROCTOR TEST (ITEM NO. 209008)
(5) GEOTEXTILE, SEPARATION (ITEM NO. 708002)
(6) 4" PCC SIDEWALK (ITEM NO. 705001)
(7) 6" PCC SIDEWALK (ITEM NO. 705002)
(8) 6" TOPSOIL, SEED, MULCH
(9) BORROW TYPE F (ITEM NO. 209006)

NOTE: ALL ITEM NUMBERS REFERENCE DELDOT STANDARD SPECIFICATIONS/ITEMS.

HIERARCHY OF CONTRACT DOCUMENTS

ELEMENTS UNDER THIS CONTRACT SHALL BE CONSTRUCTED UTILIZING THE FOLLOWING INFORMATION IN THE HIERARCHY LISTED BELOW:

1. CONTRACT AGREEMENT BETWEEN OWNER AND CONTRACTOR.
2. APPROVED PLANS.
3. PROJECT MANUAL AND ENCLOSED TECHNICAL SPECIFICATIONS.
4. STATE OF DELAWARE DEPARTMENT OF NATURAL RESOURCES AND ENVIRONMENTAL CONTROL EROSION AND SEDIMENT CONTROL HANDBOOK, FEBRUARY, 2019 OR MOST CURRENT AT DATE OF ADVERTISEMENT.
5. DELAWARE DEPARTMENT OF TRANSPORTATION STANDARD CONSTRUCTION DETAILS, 2018, OR MOST CURRENT AT ADVERTISEMENT.
6. DELAWARE DEPARTMENT OF TRANSPORTATION STANDARDS AND SPECIFICATIONS FOR BRIDGE AND ROAD CONSTRUCTION, 2016, OR MOST CURRENT AT DATE OF ADVERTISEMENT.

GENERAL NOTES

1. THE CONTRACTOR SHALL NOTIFY DNREC FISHERIES DIVISION AT (302) 735-8654 SEVEN (7) DAYS PRIOR TO ANY CONSTRUCTION SO THAT FISHERIES CAN PREPARE APPROPRIATE PRESS RELEASES.
2. THERE SHALL BE NO IN WATER WORK COMPLETED APRIL 1 – JULY 30.
3. IT SHALL BE THE RESPONSIBILITY OF THE CONTRACTOR TO PLACE A MINIMUM OF TWO SIGNS INFORMING THE PUBLIC OF UPCOMING CONSTRUCTION ACTIVITIES AND AREA CLOSURE. THE SIGNS SHALL BE A MINIMUM OF 8.5"x11" LAMINATED PAPER AND SHALL SAY "NOTICE TO THE PUBLIC: THIS AREA WILL BE CLOSED FROM (INSERT DATE) TO (INSERT DATE) DUE TO CONSTRUCTION ACTIVITIES. PLEASE CALL THE DIVISION OF FISH & WILDLIFE FISHERIES SECTION AT 302-739-9914 WITH ANY QUESTIONS." SIGNS SHALL BE POSTED A MINIMUM OF TWO WEEKS BEFORE THE CONSTRUCTION CLOSURE. SIGN LOCATIONS SHALL BE COORDINATED WITH THE FISHERIES PROJECT MANAGER.
4. CONTRACTOR SHALL CONTACT MISS UTILITY OF DELMARVA AT 1-800-282-8555 48 HOURS PRIOR TO ANY EXCAVATION ACTIVITIES.
5. CONTRACTOR SHALL COORDINATE ALL CONSTRUCTION WITH WORKING DRAWINGS PROVIDED BY THE DOCK MANUFACTURER.
6. THE CONTRACTOR SHALL CONTACT THE OWNER AND THE ENGINEER AT LEAST 48 HOURS PRIOR TO SHEET PILE AND/OR SUPPORT PILE INSTALLATION AND FOR ALL MEETINGS, INCLUDING PRE-CONSTRUCTION MEETINGS, AS REQUIRED IN THE CONSTRUCTION SPECIFICATIONS.
7. CONTRACTOR SHALL LOAD TEST ALL SUBGRADE SOIL PRIOR TO THE PLACEMENT OF THE SUBBASE COURSE. ALL UNSUITABLE MATERIAL FOUND SHALL BE EXCAVATED TO THE DEPTH OF STABLE SOIL AND BACKFILLED WITH APPROVED MATERIAL. THE CONTRACTOR SHALL COMPACT ALL MATERIALS TO MEET THE DELDOT STANDARD SPECIFICATIONS.
8. MAXIMUM ALGEBRAIC DIFFERENCE OF CROSS SLOPES SHALL NOT EXCEED 8%.
9. BORROW, TYPE B, SHALL BE UTILIZED FOR ALL UNDERCUT LOCATIONS AS DIRECTED BY ENGINEER IN THE FIELD.
10. IMPACTS TO SUBAQUEOUS LANDS HAVE BEEN PERMITTED WITHIN THE LOC LINE SHOWN. WORK BEYOND THE LOC IS STRICTLY PROHIBITED.
11. ALL FIXED DOCKS, HANDRAILS, ALUMINUM HEADER SUPPORT CHANNELS, AND ANCILLARY ITEMS TO BE PROVIDED BY OWNER AND INSTALLED BY THE CONTRACTOR PER MANUFACTURERS' SPECIFICATIONS AND RECOMMENDATIONS.
12. THESE DRAWINGS DO NOT INCLUDE NECESSARY ELEMENTS OF CONSTRUCTION SAFETY. ALL CONSTRUCTION, INCLUDING EXCAVATION, MUST BE COMPLETED IN ACCORDANCE WITH THE RULES AND REGULATIONS OF THE OCCUPATIONAL SAFETY AND HEALTH ACT, AND ALL FEDERAL, STATE AND LOCAL REQUIREMENTS. CONTRACTOR IS SOLELY RESPONSIBLE FOR ALL SITE SAFETY.
13. ORDINARY HIGH WATER MARK (OHW) ELEVATION SURVEYED BY CENTURY ENGINEERING, INC. IN OCTOBER 2019.

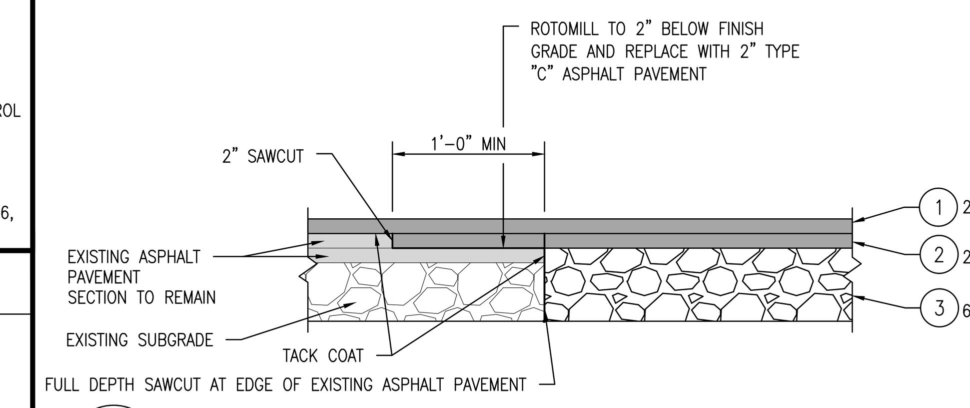

3/C101 PAVEMENT DETAIL FOR ADDED PARKING LOT PAVEMENT

NOT TO SCALE

NOTE: SEE TYPICAL SECTION FOR NEW ASPHALT PAVEMENT SECTION.

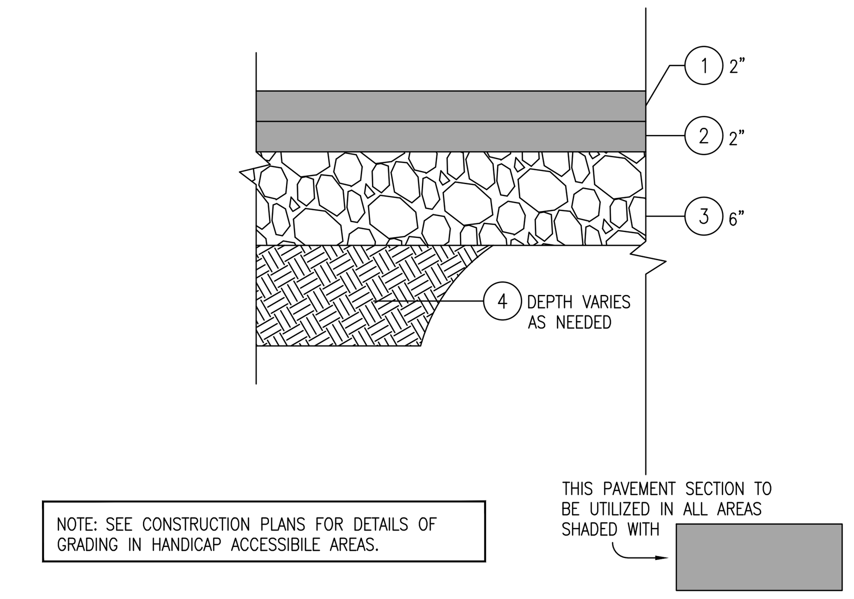

4/C101 TYPICAL SECTION- FULL DEPTH PAVEMENT

NOT TO SCALE

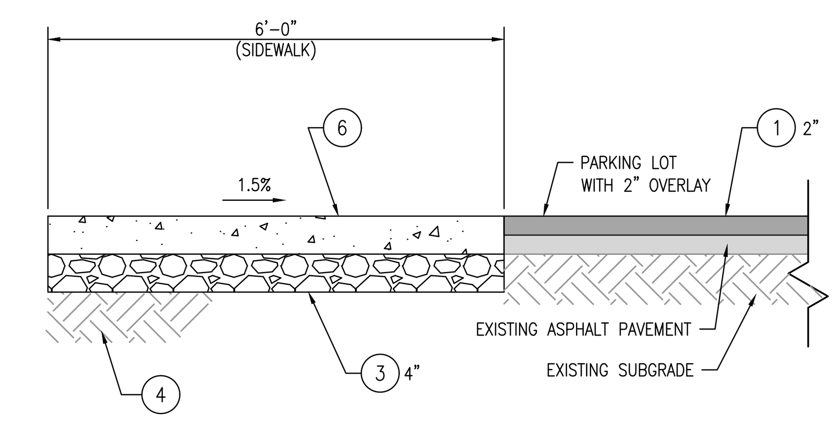

5/C101 TYPICAL SECTION - SIDEWALK

NOT TO SCALE

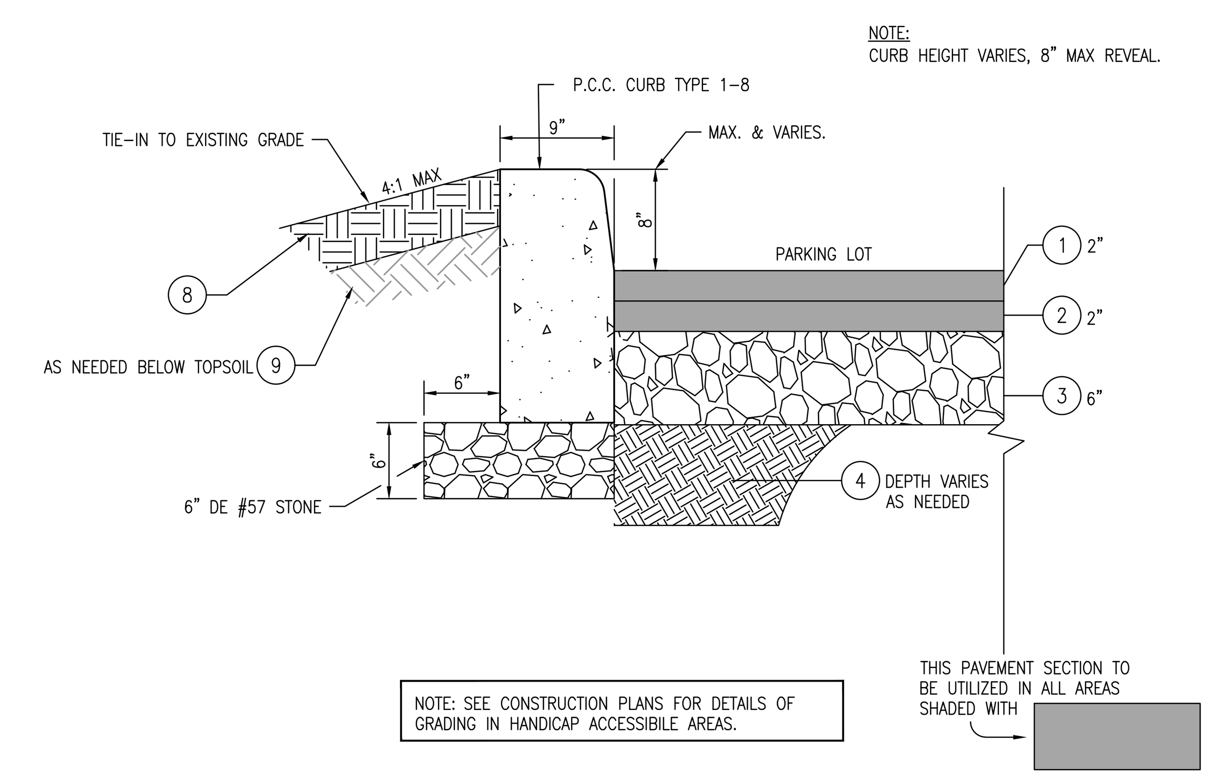

6/C101 TYPICAL SECTION- NEW CURB

NOT TO SCALE

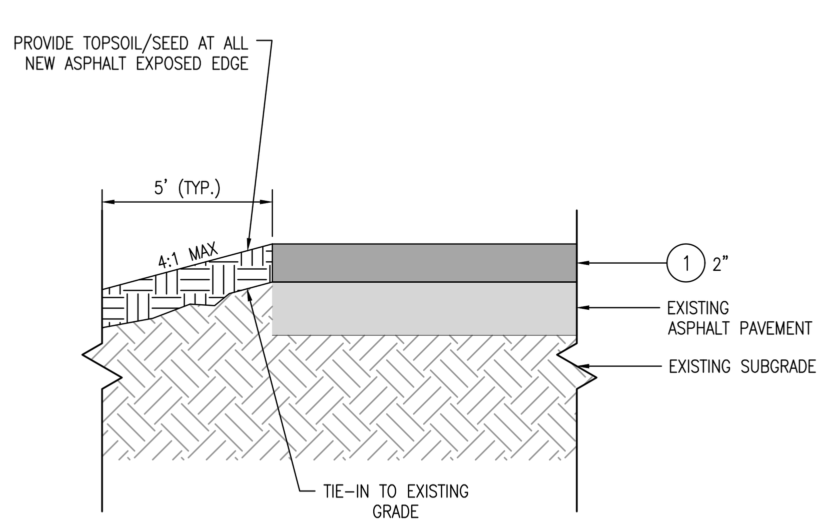

1/C101 TYPICAL SECTION - OVERLAY PAVEMENT

NOT TO SCALE

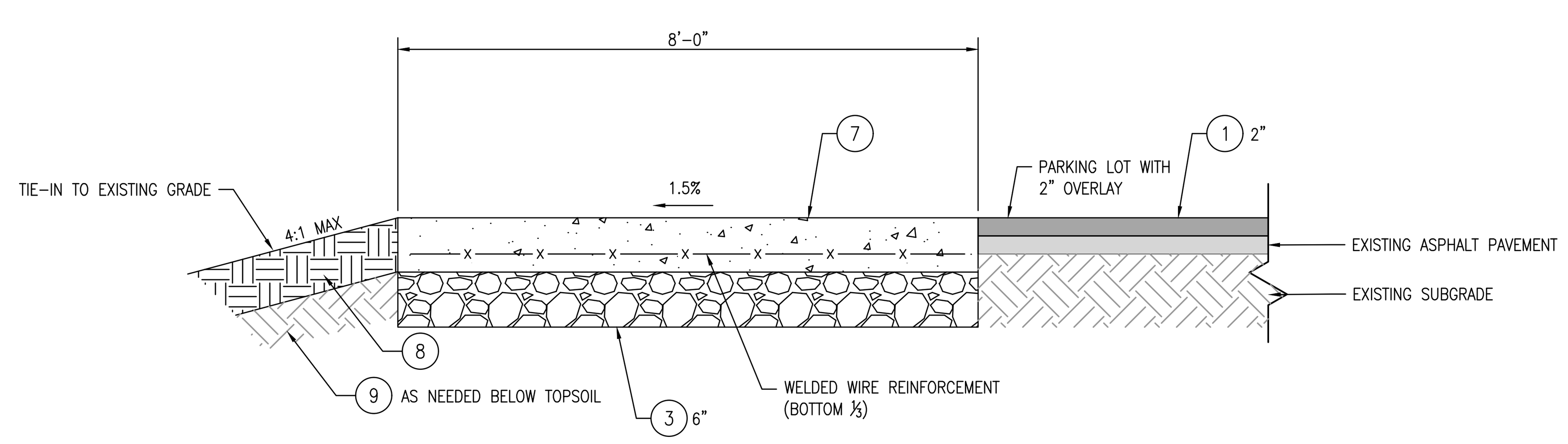

2/C101 TYPICAL SECTION - PORTABLE RESTROOM PAD

NOT TO SCALE

This drawing is the property of Century Engineering, Inc. and is prepared for the exclusive use of its clients at the location indicated. No other use is authorized or intended.

CENTURY ENGINEERING, INC.

ADDRESS: 550 BAY ROAD DOVER, DE 19901 P: (302) 734-9188 F: (302) 734-4589

WEBSITE: www.centuryeng.com

EMAIL: cei@centuryeng.com

REVISIONS

ADDENDUM

DESCRIPTION	DATE

PROJECT

CONSTRUCTION PLANS FOR DELAWARE DIVISION OF FISH & WILDLIFE GARRISON'S LAKE BOAT RAMP RECONSTRUCTION

LITTLE CREEK HUNDRED, KENT COUNTY, DELAWARE

SHEET TITLE

LEGEND, PROJECT NOTES & TYPICAL SECTIONS

DIV. OF FISH AND WILDLIFE BID SET

OCTOBER, 2020

DRAWN	CHK'D/DESIGNER
ECM	AES
SCALE	SHEET NO.
AS NOTED	C101
PROJECT NO. 175013.43	

G:\Projects\175013.00 DNREC 2017 Engineering On Call\175013.43 (Garrisons Lake Boat Ramp)\CADD FILES\Sheets\Construction Plans\C101-Legend-ProjectNotes-TypSections.dwg, 11/10/2020 3:50 PM

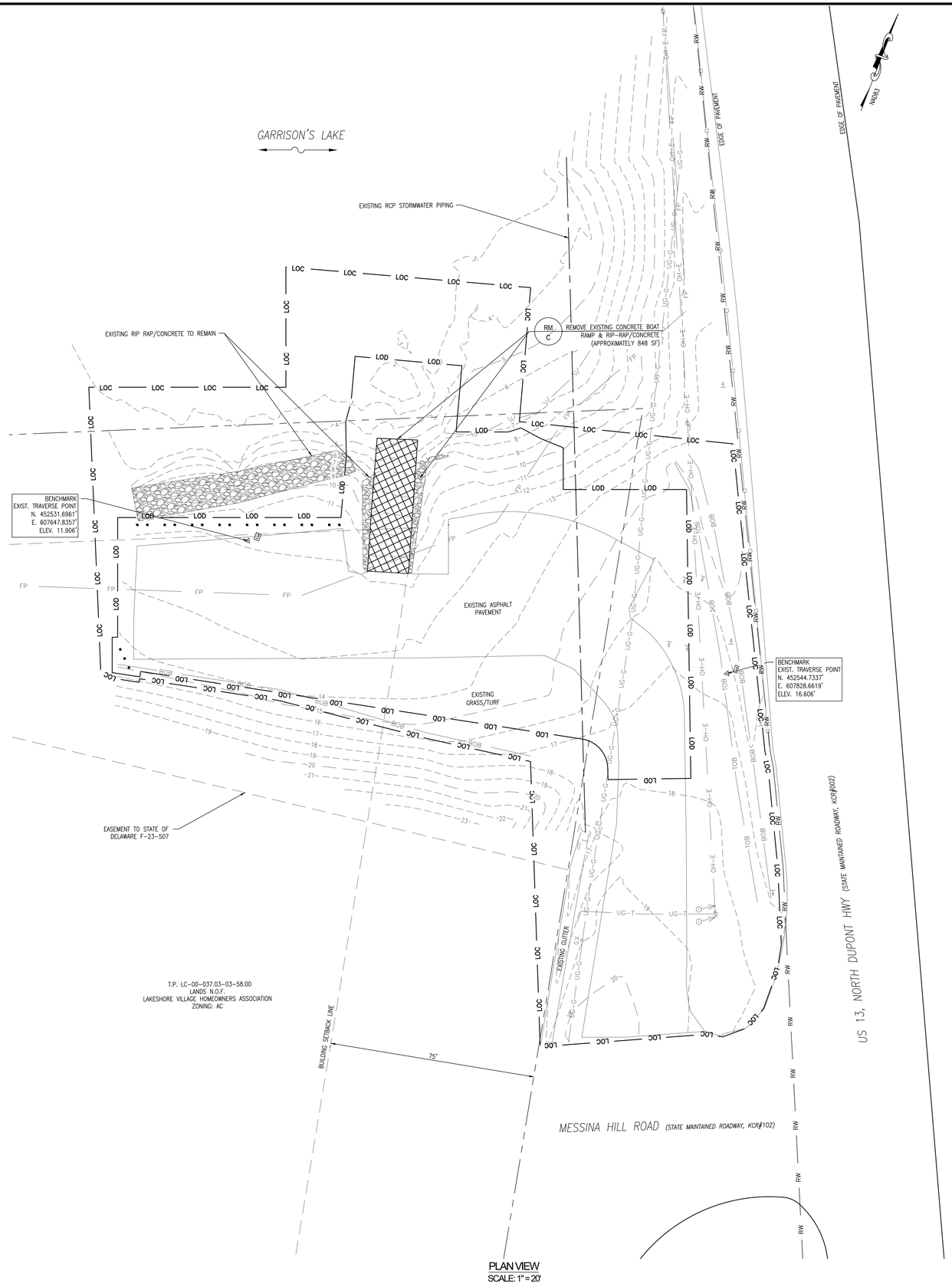

PLAN VIEW
SCALE: 1" = 20'

LEGEND:

AREA OF EXISTING CONCRETE BOAT RAMP TO BE DEMOLISHED

GENERAL NOTES

1. ORDINARY HIGH WATER MARK ELEVATION WAS SURVEYED BY CENTURY ENGINEERING, INC. IN OCTOBER, 2019.
2. ALL DEMOLISHED MATERIAL IS TO BECOME THE PROPERTY OF THE CONTRACTOR AND SHALL BE LEGALLY DISPOSED OF OFF SITE.
3. SEE CONSTRUCTION LAYOUT PLAN FOR SEQUENCE OF CONSTRUCTION AND EROSION & SEDIMENT CONTROL DEVICES.
4. UNLESS OTHERWISE NOTED ON THIS SHEET, THE CONTRACTOR SHALL NOT DISTURB EXISTING INFRASTRUCTURE ON THE SITE INCLUDING, BUT NOT LIMITED TO, UTILITIES, DRAINAGE PIPES/INLETS, SIDEWALKS, TREES W/DBH >4", AND SIGNAGE WITHOUT PRIOR APPROVAL FROM THE OWNER.

0' 20' 40' 60'
SCALE: 1" = 20'

This drawing is the property of Century Engineering, Inc. and is prepared for the exclusive use of its clients at the location indicated. No other use is authorized or intended.

CENTURY ENGINEERING, INC.
ADDRESS: 550 BAY ROAD DOVER, DE 19901
P: (302) 734-9188 F: (302) 734-4589
WEBSITE: www.centuryeng.com
EMAIL: cei@centuryeng.com

REVISIONS

ADDENDUM

DESCRIPTION	DATE

PROJECT
CONSTRUCTION PLANS
FOR
DELAWARE DIVISION OF FISH & WILDLIFE
GARRISON'S LAKE BOAT RAMP RECONSTRUCTION
LITTLE CREEK HUNDRED, KENT COUNTY, DELAWARE

SHEET TITLE
EXISTING CONDITIONS & DEMOLITION PLAN

DIV. OF FISH AND WILDLIFE
BID SET
OCTOBER, 2020

DRAWN	CHK'D/DESIGNER
ECM	AES
SCALE	SHEET NO.
1"=20'	C102
PROJECT NO.	
175013.43	

G:\Projects\175013.00 (DNREC 2017 Engineering OE)\175013.43 (Garrisons Lake Boat Ramp)\CADD FILES\Sheets\Construction Plans\C102_ExistingConditionsDemoPlan.dwg, 11/10/2020 3:51 PM

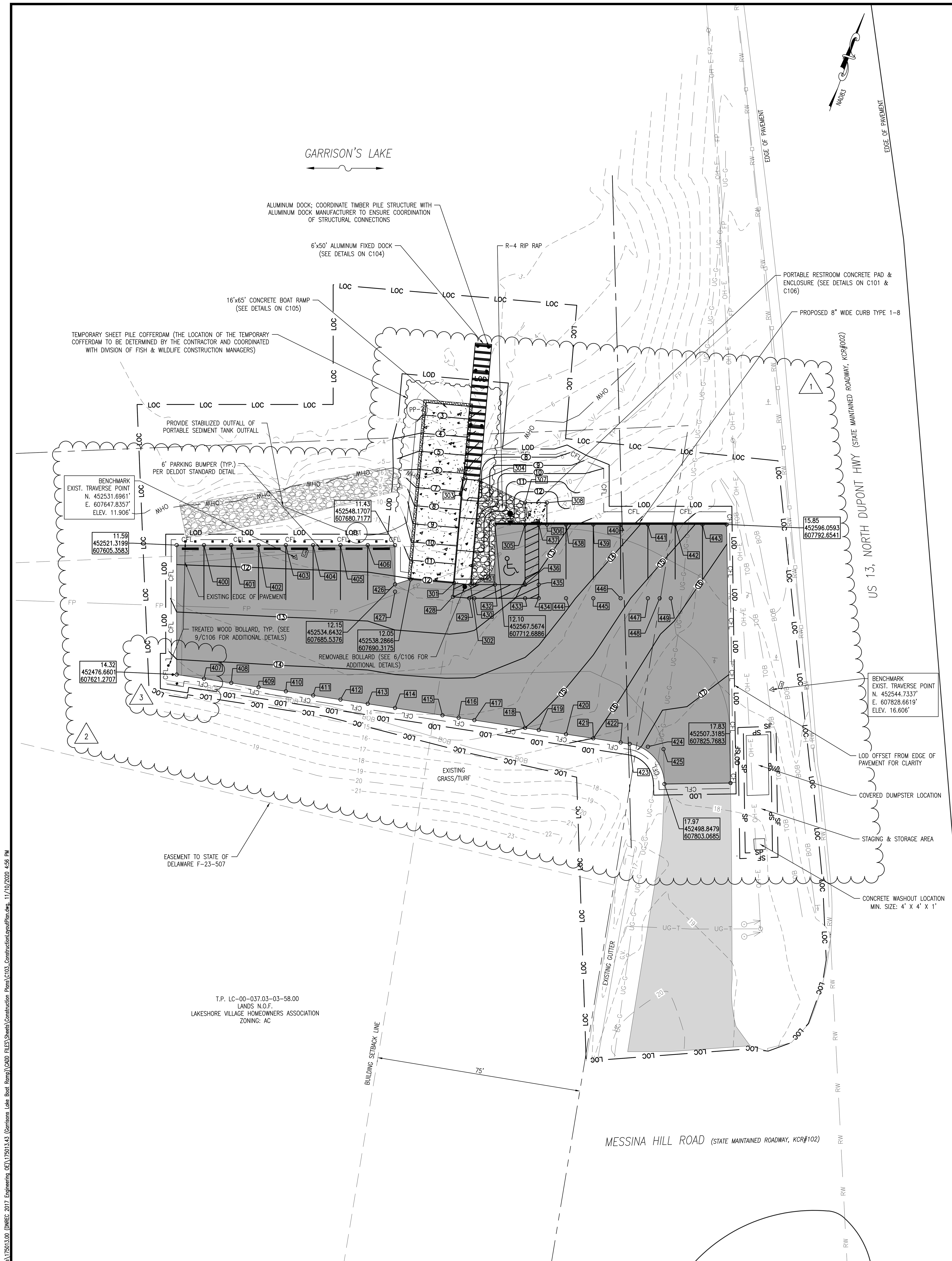

PLAN VIEW
SCALE: 1" = 20'

PAVEMENT MARKINGS LEGEND (DELDOT SECTION 817)

SYMBOL	ITEM
(A)	4" SOLID BLUE ALKYD PAVEMENT STRIPING
(B)	4" SOLID WHITE ALKYD PAVEMENT STRIPING
(C)	BLUE RETROFLECTIVE PREFORMED PATTERNED MARKINGS, SYMBOL/LEGEND

SIGNING LEGEND (DELDOT SECTION 819)

SYMBOL	ITEM
1	ACCESSIBLE PARKING SIGN (SEE DETAIL ON C106)

SIDEWALK & CONC. PAD LAYOUT

POINT NO.	NORTHING	EASTING	ELEVATION
301	452542.3082	607705.8038	12.05
302	452543.8162	607711.6112	12.15
303	452579.3883	607696.1760	8.87
304	452580.8971	607701.9847	8.87
305	452571.2713	607723.0842	12.31
306	452573.9564	607730.6201	12.43
307	452578.8072	607720.3991	12.19
308	452581.4923	607727.9350	12.31

FULL DEPTH PAVEMENT LAYOUT

POINT NO.	NORTHING	EASTING	ELEVATION
400	452524.6762	607614.7783	11.57
401	452528.0326	607624.1982	11.55
402	452531.3889	607633.6181	11.53
403	452534.7453	607643.0380	11.51
404	452538.1016	607652.4580	11.49
405	452541.4580	607661.8779	11.47
406	452544.8143	607671.2978	11.45
407	452478.5735	607631.2054	14.37
408	452480.4867	607641.1389	14.43
409	452482.3999	607651.0730	14.48
410	452484.3132	607661.0071	14.53
411	452486.2265	607670.9412	14.59
412	452488.1397	607680.8753	14.64
413	452490.0530	607690.8094	14.69
414	452491.9662	607700.7435	14.75
415	452495.2923	607718.0133	14.84
416	452496.4261	607723.8999	14.87
417	452497.5291	607729.6272	14.90
418	452501.0849	607748.0898	15.00
419	452502.0420	607753.0589	15.20

FULL DEPTH PAVEMENT LAYOUT

POINT NO.	NORTHING	EASTING	ELEVATION
420	452503.9537	607762.9853	15.60
421	452505.8670	607772.9192	16.00
422	452507.7817	607782.8610	16.53
423	452508.4173	607786.1613	16.71
424	452509.6934	607792.7868	17.14
425	452510.7873	607798.4667	17.51
426	452534.6432	607685.5376	12.15
427	452532.1135	607686.4389	12.14
428	452537.4685	607707.0600	12.15
429	452538.9727	607712.8522	12.25
430	452539.5911	607714.6404	12.32
431	452544.2980	607712.9633	12.22
432	452546.8258	607720.0578	12.50
433	452545.8271	607732.1500	13.16
434	452547.5053	607736.8600	13.33
435	452552.2146	607735.1820	13.16
436	452550.5364	607730.4721	13.06
437	452572.9495	607727.7941	12.41
438	452576.3058	607737.2141	12.91
439	452579.6622	607746.6340	13.41

FULL DEPTH PAVEMENT LAYOUT

POINT NO.	NORTHING	EASTING	ELEVATION
440	452583.0185	607756.0539	13.91
441	452586.3749	607765.4738	14.41
442	452589.7312	607774.8937	14.91
443	452593.0876	607784.3137	15.41
444	452550.8585	607746.2800	13.83
445	452554.2135	607755.7004	14.32
446	452557.5693	607765.1215	14.82
447	452560.9247	607774.5408	15.31
448	452562.3669	607778.5915	15.53
449	452563.7388	607782.4425	15.73

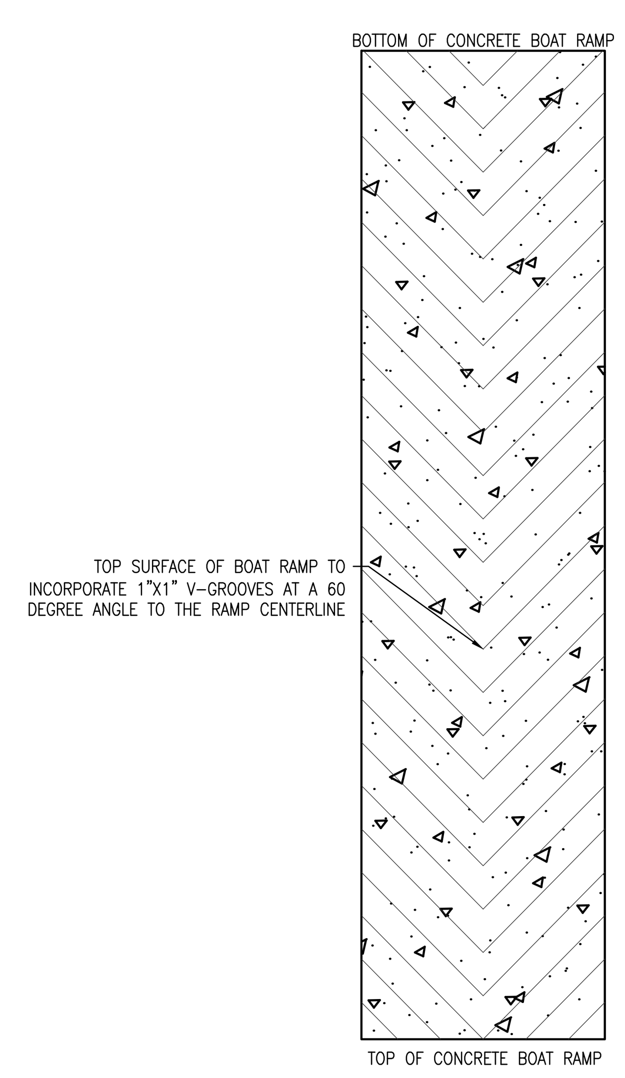

2 / C103 CONCRETE BOAT RAMP V-GROOVES DETAIL
NOT TO SCALE

GENERAL NOTES

1. RIGHT OF WAY, LOCATIONS, PROPERTY LINES PROVIDED BY DELAWARE DIVISION OF FISH & WILDLIFE. CENTURY ENGINEERING, INC. TAKES NO RESPONSIBILITY FOR THEIR ACCURACY.
2. TOPOGRAPHY SURVEY PERFORMED BY CENTURY ENGINEERING, INC. IN OCTOBER, 2019.
3. EXISTING ASPHALT PAVING AREAS SHOWN FOR OVERLAY SHALL BE OVERLAIN WITH 2" OF BITUMINOUS CONCRETE, SUPERPAVE, TYPE C (DELDOT ITEM NO. 401002). PROVIDE BUTT JOINT PER DELDOT STANDARD DETAIL P-3 AT LOCATIONS WHERE OVERLAY MEETS EXISTING HOTMIX OR CONCRETE. TAPER RATIO SHALL BE 15:1.
4. ALL PARCEL BOUNDARIES SHOWN ARE REFERENCED FROM STATE OF DELAWARE GIS DATA.
5. NO FIRE LANES, PERIMETER ACCESS, OR SPRINKLER SYSTEMS ARE REQUIRED FOR THIS PROJECT.
6. EASEMENT GRANTED TO THE STATE OF DELAWARE PER DEED RECORD, F-23-507, RECORDED IN THE RECORDER OF DEEDS IN AND FOR KENT COUNTY, STATE OF DELAWARE ON AUGUST 28TH, 1963.
7. END OF ALL CURBS SHALL BE TRANSITIONED TO BE FLUSH WITH THE PAVEMENT AT A RATIO OF 2:1.

SEQUENCE OF CONSTRUCTION

1. PRIOR TO ANY CLEARING, INSTALLATION OF SEDIMENT CONTROL MEASURES, OR GRADING, A PRE-CONSTRUCTION MEETING MUST BE SCHEDULED AND CONDUCTED. THE LANDOWNER/DEVELOPER AND CONTRACTOR ARE REQUIRED TO BE IN ATTENDANCE AT THE PRE-CONSTRUCTION MEETING; THE DESIGNER IS RECOMMENDED TO ATTEND.
2. THE CONTRACTOR SHALL AT ALL TIMES PROTECT AGAINST SEDIMENT OR DEBRIS LADEN RUNOFF OR WIND FROM LEAVING THE SITE. PERIMETER CONTROLS SHOULD BE CHECKED DAILY AND ADJUSTED AND/OR REPAIRED TO FULLY CONTAIN AND CONTROL SEDIMENTATION ON THE SITE. ACCUMULATED SEDIMENT SHALL BE REMOVED WHEN IT HAS REACHED HALF OF THE EFFECTIVE CAPACITY OF THE CONTROL. IN ADDITION, THE CONTRACTOR MAY NEED TO ADJUST OR REPAIR MEASURES IN TIMES OF ADVERSE WEATHER CONDITIONS, OR AS DIRECTED BY THE AGENCY CONSTRUCTION SITE REVIEWER.
3. INSTALL TURBIDITY CURTAIN AND/OR TEMPORARY SHEET PILE COFFERDAM. REMOVE EXISTING CONCRETE BOAT RAMP.
4. INSTALL SITE POLLUTION PREVENTION DEVICES PER DNREC STANDARD DETAILS & SPECIFICATIONS, INCLUDING CONCRETE WASHOUT.
5. INSTALL ALL TIMBER SUPPORT PILES FOR THE FIXED DOCK.
6. CLEAR AREAS AS NEEDED WITHIN LOC.
7. INSTALL SUMP PIT AND PORTABLE SEDIMENT TANK FOR DEWATERING OPERATION AT THE BOAT RAMP.
8. PERFORM ROUGH GRADING AT THE PROPOSED BOAT RAMP AND FULL DEPTH PAVEMENT AREAS.
9. PLACE STONE FOUNDATION AND CONCRETE FOR BOAT RAMP. PLACE GABC FOR AREAS OF FULL DEPTH PAVEMENT.
10. INSTALL HEADER KITS ON TIMBER PILES FOR FIXED DOCK.
11. PLACE TYPE B HOTMIX AT FULL DEPTH PAVEMENT AREAS.
12. PLACE TYPE C ASPHALT AT ALL AREAS TO BE OVERLAIN AND AT FULL DEPTH AREAS.
13. PLACE ALUMINUM FIXED DOCK AND ALL ASSOCIATED COMPONENTS.
14. STRIPE ALL PAVED AREAS.
15. STABILIZE ALL UNPAVED DISTURBED AREAS WITH MINIMUM 6" TOPSOIL, DNREC APPROVED SEED MIX, AND MULCHING.
16. EROSION & SEDIMENT CONTROL DEVICES SHALL BE REMOVED ONLY AFTER WORK IN AN AREA HAS BEEN COMPLETED AND STABILIZED, WITH WRITTEN APPROVAL FROM THE OWNER.

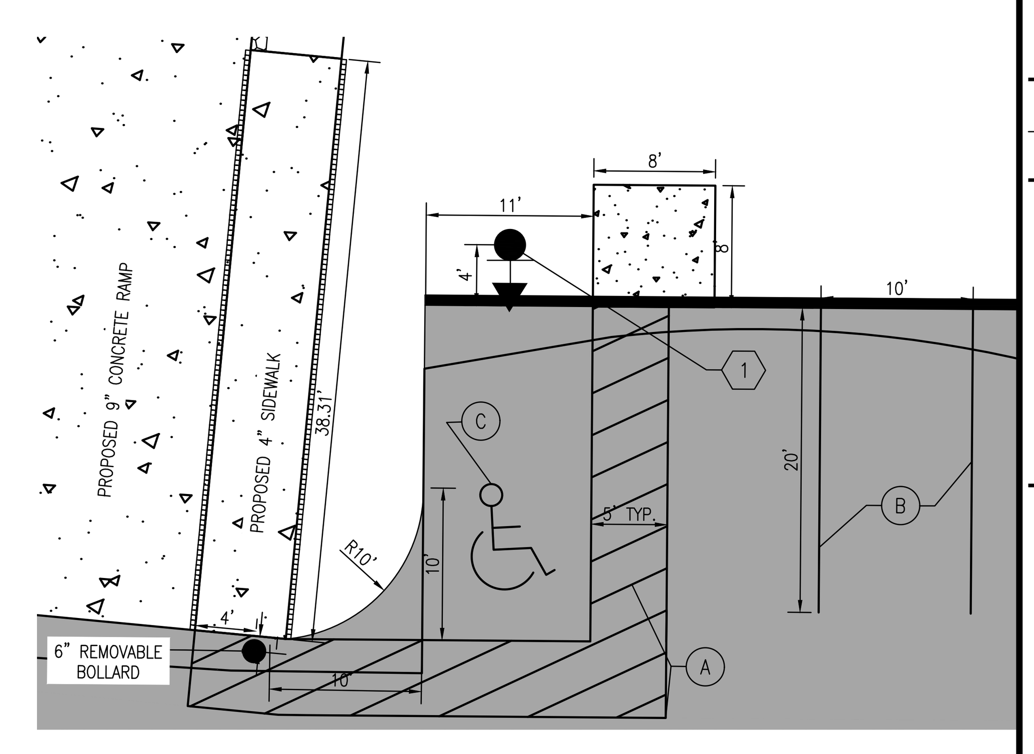

1 / C103 STRIPING & REMOVABLE BOLLARD LAYOUT DETAIL
SCALE: 1" = 10'

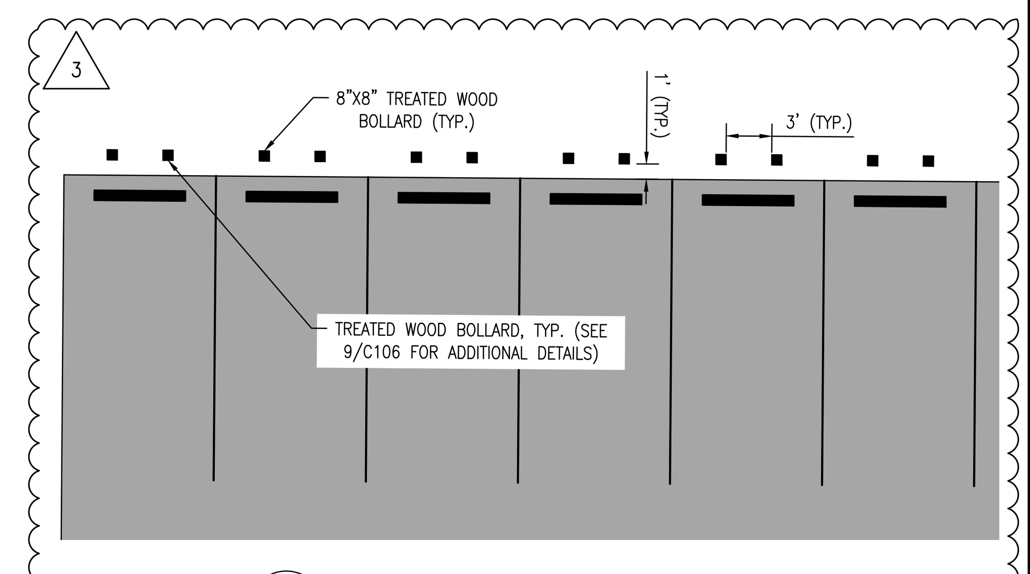

3 / C103 TREATED WOOD BOLLARD LAYOUT DETAIL
SCALE: 1" = 10'

SCALE: 1" = 20'

This drawing is the property of Century Engineering, Inc. and is prepared for the exclusive use of its clients at the location indicated. No other use is authorized or intended.

CENTURY ENGINEERING, INC.
ADDRESS: 550 BAY ROAD DOVER, DE 19901
P: (302) 734-9188 F: (302) 734-4589
WEBSITE: www.centuryeng.com
EMAIL: cei@centuryeng.com

REVISIONS

ADDENDUM

△	DESCRIPTION	DATE
1	ADJUSTED SITE GRADES & FULL DEPTH PAVING LIMITS.	10/27/2020
2	ADJUSTED COMPOST FILTER LOG & LIMIT OF DISTURBANCE.	11/03/2020
3	ADJUSTED COMPOST FILTER LOG, LIMIT OF DISTURBANCE & LIMIT OF CONSTRUCTION. NINETEEN (19) TREATED WOOD BOLLARDS & TREATED WOOD BOLLARD LAYOUT DETAIL 3/C103 ADDED.	11/10/2020

PROJECT
CONSTRUCTION PLANS FOR DELAWARE DIVISION OF FISH & WILDLIFE
GARRISON'S LAKE BOAT RAMP RECONSTRUCTION
LITTLE CREEK HUNDRED, KENT COUNTY, DELAWARE

SHEET TITLE
CONSTRUCTION LAYOUT PLAN

DIV. OF FISH AND WILDLIFE BID SET
OCTOBER, 2020

DRAWN	CHK'D/DESIGNER
ECM	AES
SCALE	SHEET NO.
AS NOTED	C103
PROJECT NO. 175013.43	

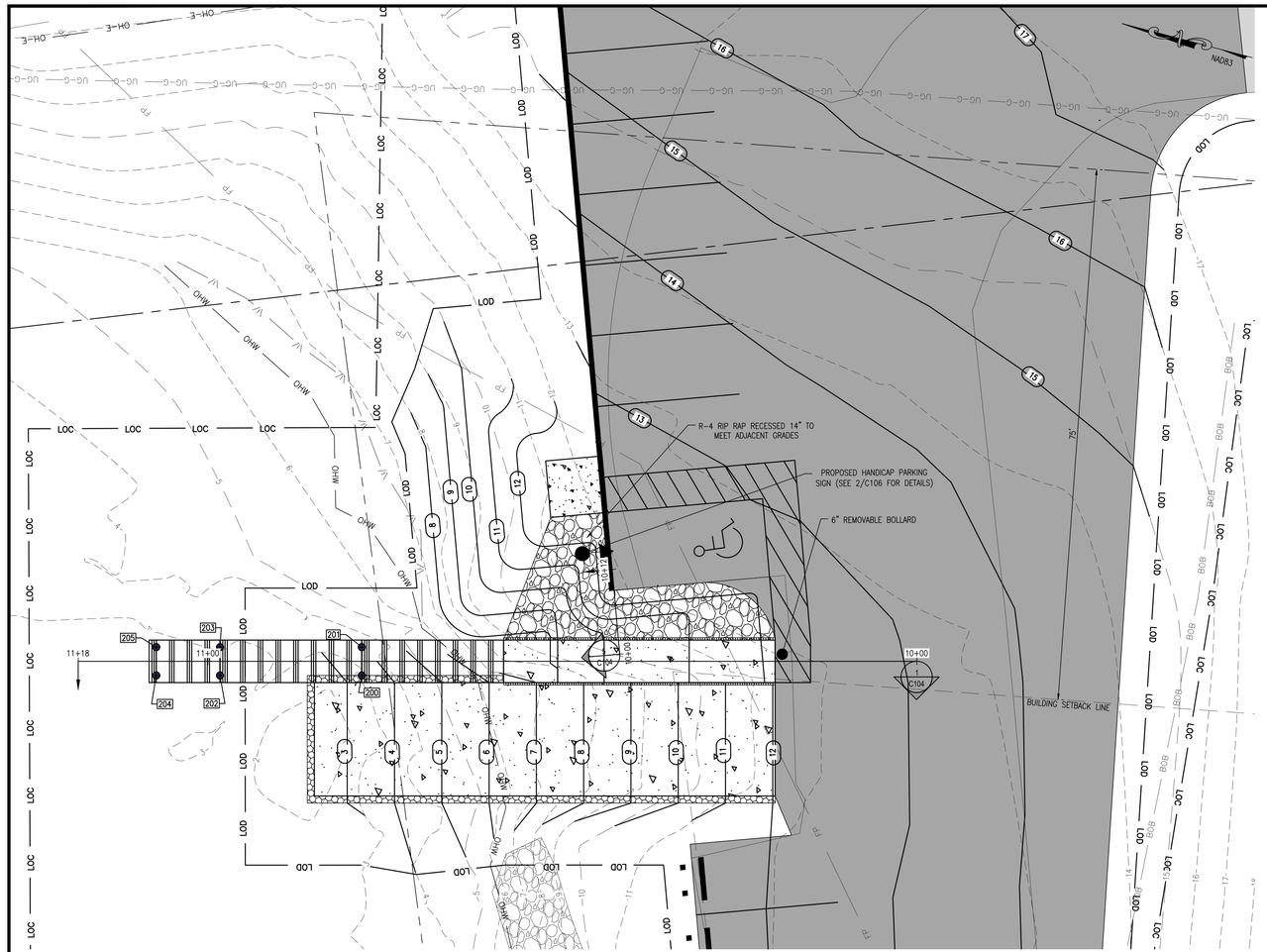

PLAN VIEW
SCALE: 1" = 10'

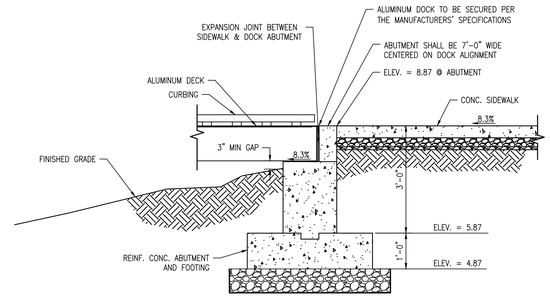

2 / C104 DOCK ABUTMENT / SIDEWALK INTERFACE
SCALE: 1/2" = 1'

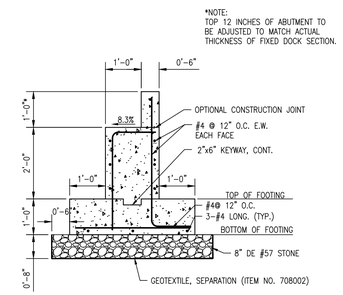

3 / C104 DOCK ABUTMENT
SCALE: 1/2" = 1'

FIXED DOCK SUPPORT PILE LAYOUT						
POINT NO.	NORTHING	EASTING	TOP ELEV.*	EST. TIP ELEV.	PILE LENGTH**	MIN. EMBEDMENT***
200	452598.9977	607692.1160	6.80'	-22.0	30.0	25.0
201	452600.0040	607695.9910	6.80'	-22.0	30.0	25.0
202	452618.3556	607687.0890	6.80'	-22.0	30.0	25.0
203	452619.3615	607690.9623	6.80'	-22.0	30.0	25.0
204	452627.0673	607684.8263	6.80'	-22.0	30.0	25.0
205	452628.0729	607688.6996	6.80'	-22.0	30.0	25.0

* NOTE: CONTRACTOR SHALL VERIFY THE TOP OF PILE ELEVATIONS WITH THE FIELD CONDITIONS AND DOCK MANUFACTURER DESIGN REQUIREMENTS.

** NOTE: PILE LENGTH COLUMN INDICATES MINIMUM PILE LENGTH TO BE ORDERED BY THE CONTRACTOR. CONTRACTOR SHALL INSTALL PILE TO MEET MINIMUM EMBEDMENT AND ULTIMATE BEARING CAPACITY REQUIREMENTS. EXCESS PILE LENGTHS SHALL BE TRIMMED AS NEEDED.

*** NOTE: IF A VIBRATORY HAMMER IS USED IN-LIEU OF AN IMPACT HAMMER, AN ADDITIONAL FIVE (5) FEET OF EMBEDMENT SHALL BE REQUIRED. ADDITIONAL PILE LENGTH MAY BE ORDERED AT THE CONTRACTORS' DISCRETION AND EXPENSE TO ENSURE EMBEDMENT CRITERIA IS SATISFIED WHEN USING A VIBRATORY HAMMER.

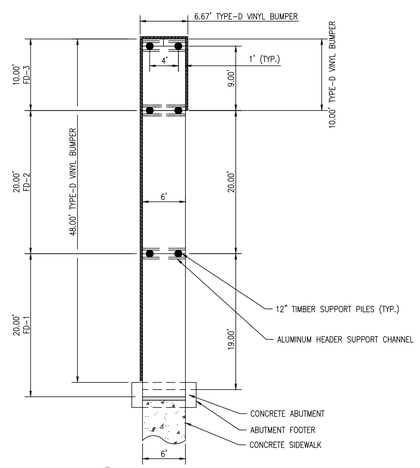

4 / C104 FIXED DOCK PLAN VIEW
SCALE: 1" = 10'

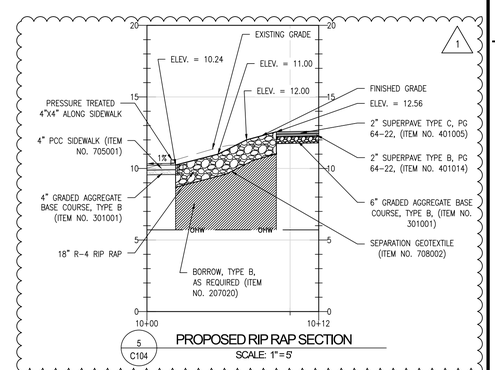

5 / C104 PROPOSED RIP RAP SECTION
SCALE: 1" = 5'

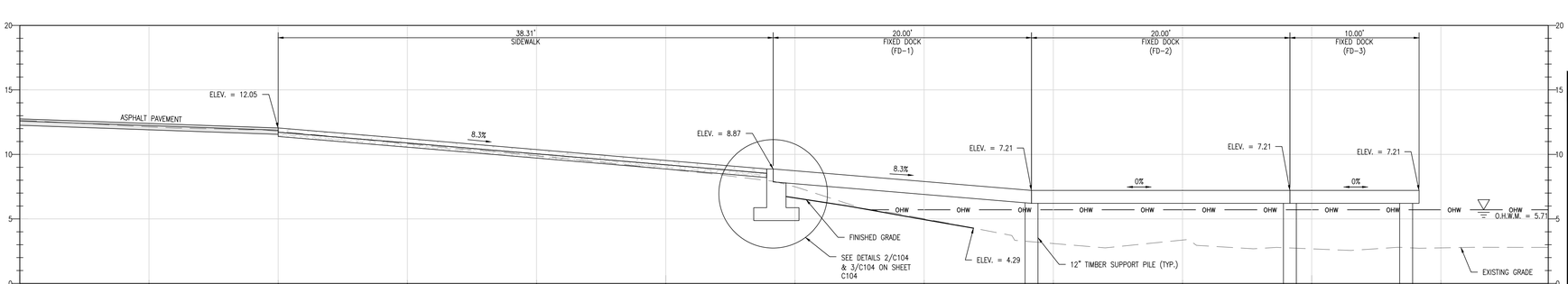

1 / C104 FIXED DOCK PROFILE
HORIZONTAL: 1" = 5'
VERTICAL: 1" = 5'

FIXED DOCK NOTES:

1. FINAL DOCK CONFIGURATION TO BE CONFIRMED WITH OWNER.
2. DOCK DIMENSIONS SHOWN ARE NOMINAL FROM ALUMINUM TO ALUMINUM FRAME. FINAL FINISHED DIMENSIONS WILL VARY ACCORDING TO INSTALLED FENDERS & BUMPERS.
3. TOP AND TIP ELEVATIONS OF TIMBER SUPPORT PILES FOR FIXED DOCK PROVIDED ON THIS SHEET.
4. ALL DOCKS, HEADER CHANNELS, RAILING, AND ANCILLARY ITEMS SHALL BE PROVIDED BY THE OWNER. HEADER CHANNELS SHALL BE ORDERED ONE (1) FOOT WIDER THAN THE PLAN LENGTH AND CUT IN THE FIELD BY THE CONTRACTOR.
5. FIXED DOCK SUPPORT PILES SHALL BE DRIVEN TO MINIMUM ULTIMATE BEARING CAPACITY OF 10.0 KIPS (AS DETERMINED BY THE ENGINEER) WHILE ALSO MEETING MINIMUM EMBEDMENT REQUIREMENTS.
6. WOOD PILES, CLASS B, SOUTHERN PINE MEETING REQUIREMENTS OF ASTM D25. PRESSURE IMPREGNATE WITH CHROMATED COPPER ARSENATE (CCA) IN ACCORDANCE WITH AMERICAN WOOD PRESERVERS ASSOCIATION (AWPA) STANDARD C3.
7. SEE MANUFACTURER'S SHOP DRAWINGS FOR ADDITIONAL ALUMINUM DOCK DETAILS.
8. REFER TO STRUCTURAL DETAILS FOR TIMBER PILE INSTALLATION NOTES.

0' 5' 10' 15'
SCALE: 1" = 5'

This drawing is the property of Century Engineering, Inc. and is prepared for the exclusive use of its clients at the location indicated. No other use is authorized or intended.

CENTURY ENGINEERING, INC.
ADDRESS: 550 BAY ROAD DOVER, DE 19901
P: (302) 734-9188 F: (302) 734-4589
WEBSITE: www.centuryeng.com
EMAIL: ce@centuryeng.com

REVISIONS

ADDENDUM

DESCRIPTION	DATE
1 PROVIDED NEW DETAIL 5/C104.	11/03/2020

PROJECT
CONSTRUCTION PLANS
FOR
DELAWARE DIVISION OF FISH & WILDLIFE
GARRISON'S LAKE BOAT RAMP RECONSTRUCTION
LITTLE CREEK HUNDRED, KENT COUNTY, DELAWARE

SHEET TITLE
FIXED DOCK DETAILS SHEET

DIV. OF FISH AND WILDLIFE BID SET
OCTOBER, 2020

DRAWN: ECM
CHK'D/DESIGNER: AES
SCALE: AS NOTED
SHEET NO.: C104
PROJECT NO.: 175013.43

G:\Projects\175013.00 (NARC 2017 Engineering QT)\175013.43 (Garrisons Lake Boat Ramp)\CADD FILES\Sheets\Construction Plans\C104_FixedDockDetails.dwg, 11/10/2020 1:53 PM

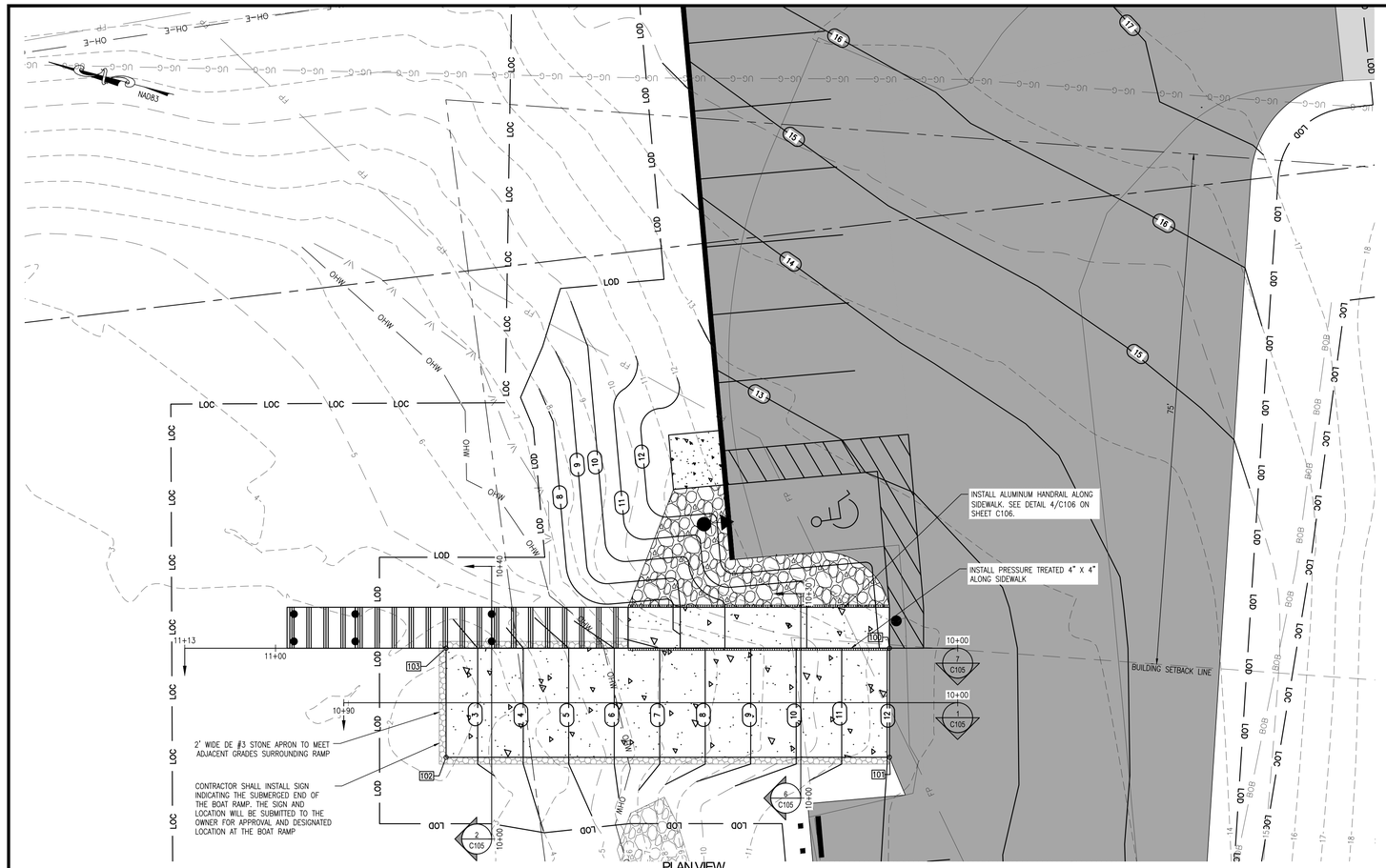

PLAN VIEW
SCALE: 1" = 10'

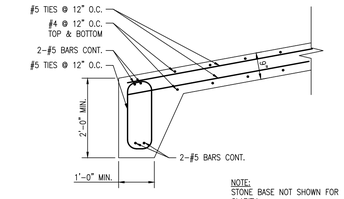

3 C105 LOWER RAMP TOE DETAIL
SCALE: 1"=2'

RAMP LAYOUT			
POINT NO.	NORTHING	EASTING	ELEVATION
100	452542.3082	607705.8038	12.05
101	452538.2866	607690.3175	12.05
102	452601.2000	607673.9801	2.30
103	452605.2215	607689.4665	2.30

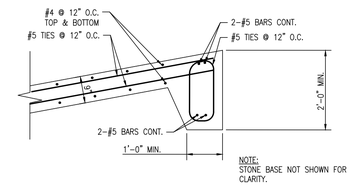

4 C105 UPPER RAMP TURNDOWN DETAIL
SCALE: 1"=2'

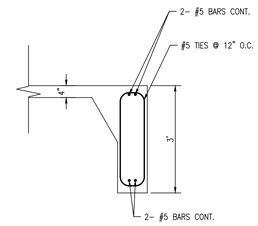

8 C105 SIDEWALK LONGITUDINAL EDGE DETAIL
NOT TO SCALE

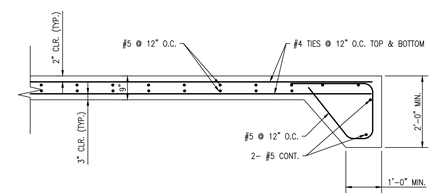

5 C105 LONGITUDINAL EDGE DETAIL
SCALE: 1"=2'

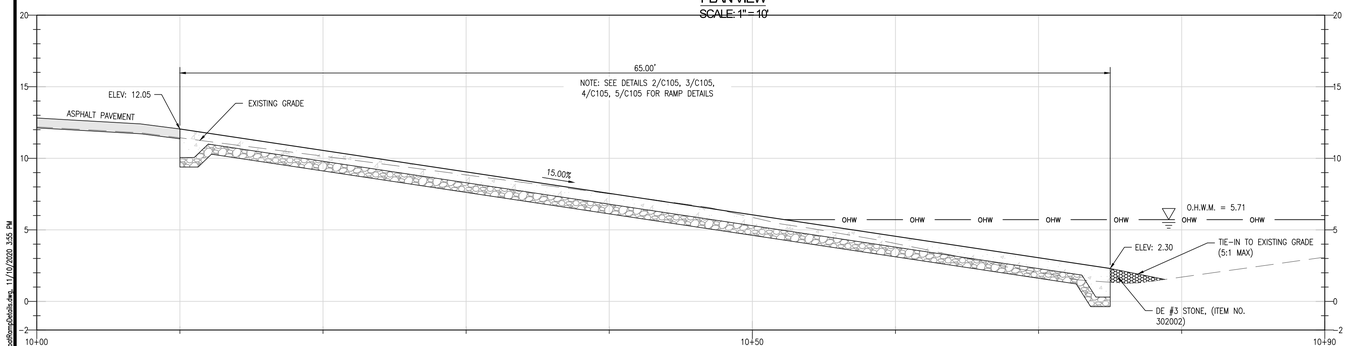

1 C105 RAMP PROFILE
HORIZONTAL: 1"=5'
VERITCAL: 1"=5'

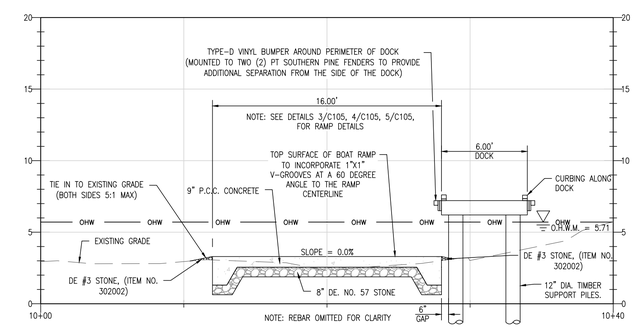

2 C105 RAMP & FIXED DOCK
HORIZONTAL: 1"=5'
VERTICAL: 1"=5'

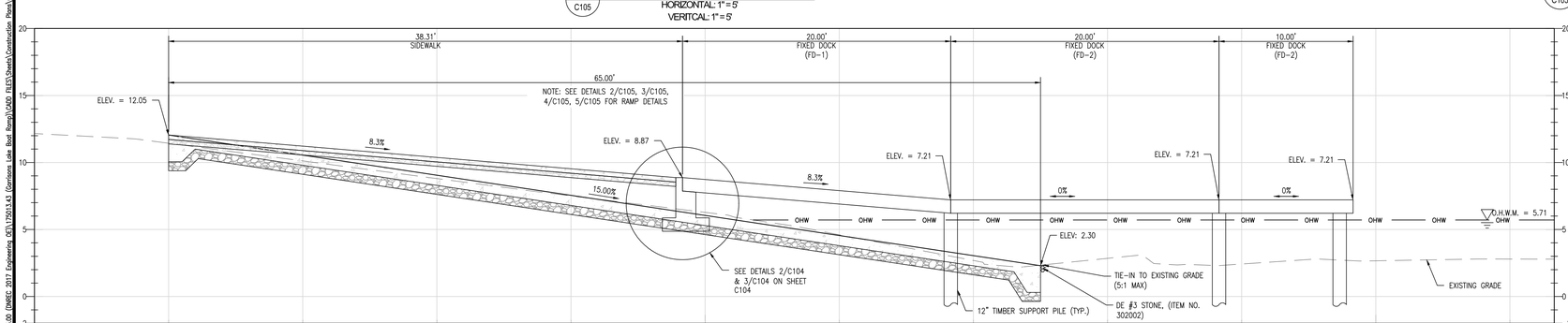

7 C105 RAMP & DOCK PROFILE
HORIZONTAL: 1"=5'
VERITCAL: 1"=5'

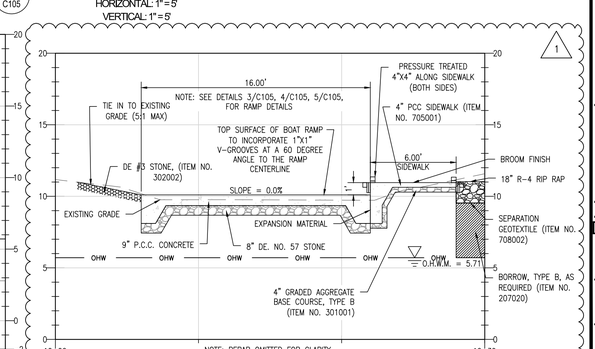

6 C105 RAMP & CONCRETE SIDEWALK
HORIZONTAL: 1"=5'
VERTICAL: 1"=5'

0' 5' 10' 15'
SCALE: 1" = 5'

This drawing is the property of Century Engineering, Inc. and is prepared for the exclusive use of its clients at the location indicated. No other use is authorized or intended.

CENTURY ENGINEERING, INC.
ADDRESS: 550 BAY ROAD DOVER, DE 19901
P: (302) 734-9188 F: (302) 734-4589
WEBSITE: www.centuryeng.com
EMAIL: ce@centuryeng.com

REVISIONS

ADDENDUM

DESCRIPTION	DATE
1 PROVIDED NEW DETAIL 6/C105.	11/03/2020

PROJECT
CONSTRUCTION PLANS
FOR
DELAWARE DIVISION OF FISH & WILDLIFE
GARRISON'S LAKE BOAT RAMP RECONSTRUCTION
LITTLE CREEK HUNDRED, KENT COUNTY, DELAWARE

SHEET TITLE
BOAT RAMP DETAILS SHEET

DIV. OF FISH AND WILDLIFE BID SET
OCTOBER, 2020

DRAWN: ECM
CHK'D/DESIGNER: AES
SCALE: AS NOTED
SHEET NO.: C105
PROJECT NO.: 175013.43

O:\Projects\175013.00 DNREC 2017 Engineering (EX)\175013.43 (Garrisons Lake Boat Ramp)\CADD FILES\Sheets\Construction Plans\C105_BoatRampDetails.dwg, 11/10/2020 3:55 PM

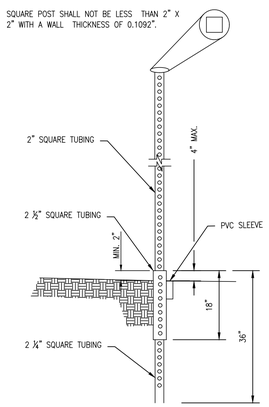

NOTES:

1. SQUARE TUBES ARE TO BE FORMED FROM GALVANIZED SHEET STRUCTURAL (PHYSICAL) QUALITY, ASTM A 446, GRADE A, COATING DESIGNATION G 90, REGULAR SPANGLE, OR HOT ROLLED CARBON SHEET STEEL STRUCTURAL (PHYSICAL) QUALITY, ASTM A 570, GRADE 33.
   A. NOMINAL OUTSIDE DIMENSION, (INCHES):
      2 X 2
      2 1/4 X 2 1/4
      2 1/2 X 2 1/2
   B. ALL FOUR SIDES ARE TO HAVE EVENLY SPACED 7/16" DIAMETER HOLES ON 1" CENTERS THE ENTIRE LENGTH OF THE TUBE.
   C. TOLERANCE ON HOLE SIZE IS ± 1/64". TOLERANCE ON HOLE SPACING IS ± 1/8" IN 20 FEET.
   D. STANDARD CORNER RADIUS SHALL BE 5/32" ± 1/64".
   E. THE FASTENERS TO BE SUPPLIED UNDER THIS SPECIFICATION SHALL BE 5/16" GRADE 5 UNC CORNER BOLTS WITH CADMIUM OR ZINC PLATING, INSTALLATION OF SIGNS SHALL BE WITH 3/8" X 2.5" BOLT WITH LOCKNUT AND WASHER.
2. REGULATORY SIGNS WIDER THAN 30" SHALL BE MOUNTED ON TWO POSTS. WHEN MORE THAN ONE REGULATORY SIGN IS TO BE INSTALLED ON THE SAME POST ASSEMBLY, THE MOUNTING HOLES SHALL BE DRILLED IN THE FIELD AS THE ASSEMBLY IS BEING CONSTRUCTED.
3. CONTRACTOR SHALL PROVIDE AND INSTALL PVC SLEEVES (4" INSIDE DIAMETER MINIMUM, 6" INSIDE DIAMETER MAXIMUM) IN PROPOSED CONCRETE SIDEWALKS, ISLANDS, AND PARKING AREAS FOR FUTURE TRAFFIC SIGN POSTS AS DIRECTED BY THE ENGINEER. THE LOWER END OF THE SLEEVE SHALL BE SET ON TOP OF THE SOIL.

1 / C106 TELESCOPING STEEL SIGN POST BREAK AWAY ASSEMBLY
NOT TO SCALE

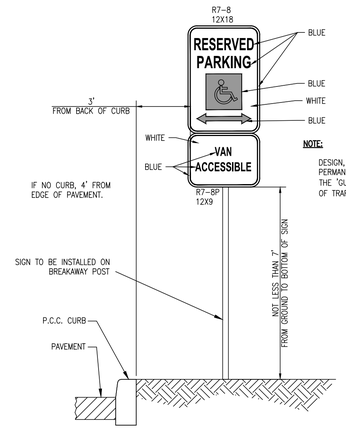

NOTE:

DESIGN, FABRICATION AND INSTALLATION OF ALL PERMANENT SIGNING SHALL BE AS OUTLINED IN THE "GUIDE FOR FABRICATION AND INSTALLATION OF TRAFFIC CONTROL DEVICES" LATEST EDITION.

2 / C106 TYPICAL SIGN INSTALLATION DETAIL
NOT TO SCALE

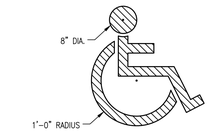

NOTES:

1. SYMBOL STRIPING SHALL BE 3" WIDE (MIN.) AND PAINTED ON EACH HANDICAPPED SPACE.
2. HANDICAPPED SPACES SHALL BE 8'-0" WIDE AT MINIMUM.

3 / C106 HANDICAPPED SYMBOL DETAIL
NOT TO SCALE

NOTES:

1. HEAVY DUTY SERIES WITH CAST WELDS
2. ALL WELDS GROUND SMOOTH
3. POSTS TO BE EMBEDDED 4" MINIMUM; EPOXY GROUTED

WELDED TWO LINE PIPE RAIL

ITEM NO.	PART NO.	DESCRIPTION	MATERIAL
1		1½" SCH.40 ALUM. PIPE TOP RAIL	6063-T6
2		1½" SCH.40 ALUM. PIPE POST	6061-T6
3		1½" SCH.40 ALUM. PIPE INTERMEDIATE RAIL	6063-T6
4	ARS 305/304	5" DIA. CAST ALUM. POST SHOE	

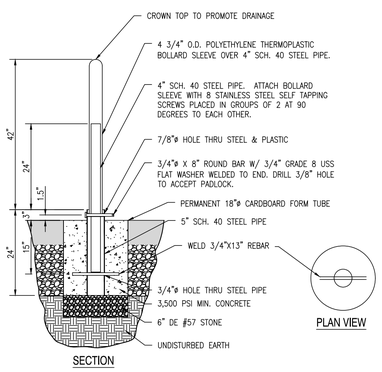

REMOVABLE BOLLARD NOTES:

1. ALL STEEL SHALL BE HOT DIPPED GALVANIZED AFTER FABRICATION.

6 / C106 REMOVABLE PIPE BOLLARD DETAIL
NOT TO SCALE

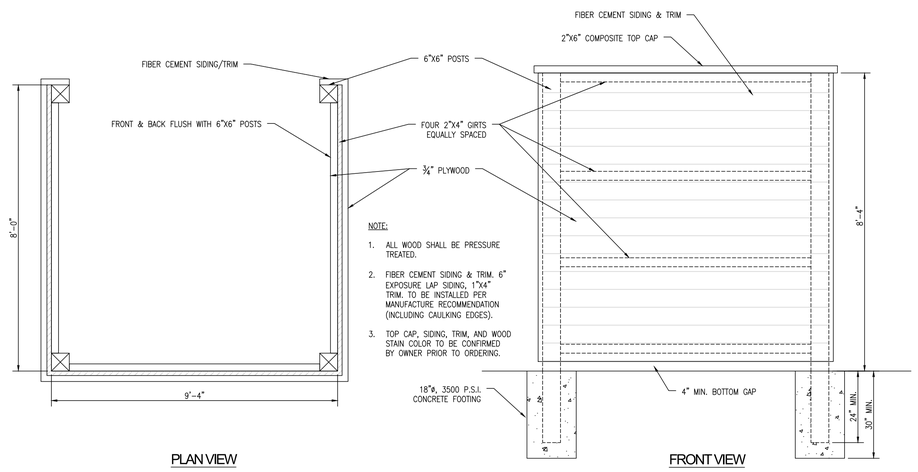

NOTE:

1. ALL WOOD SHALL BE PRESSURE TREATED.
2. FIBER CEMENT SIDING & TRIM. 6" EXPOSURE LAP SIDING, 1"X4" TRIM. TO BE INSTALLED PER MANUFACTURE RECOMMENDATION (INCLUDING CAULKING EDGES).
3. TOP CAP, SIDING, TRIM, AND WOOD STAIN COLOR TO BE CONFIRMED BY OWNER PRIOR TO ORDERING.

5 / C106 PORTABLE RESTROOM SCREEN WALL
NOT TO SCALE

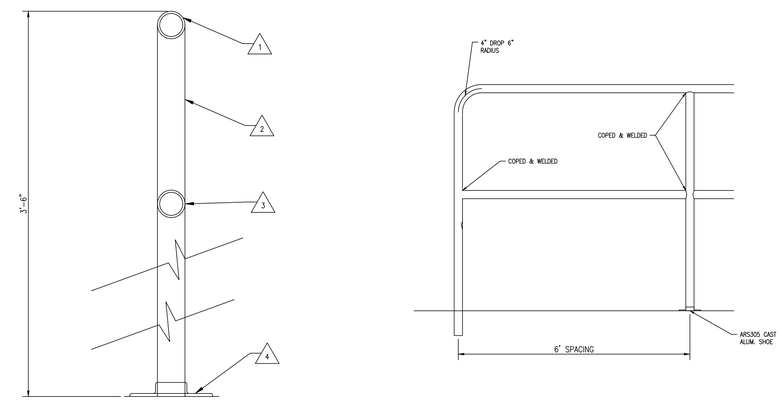

4 / C106 ALUMINUM HANDRAIL DETAIL
NOT TO SCALE

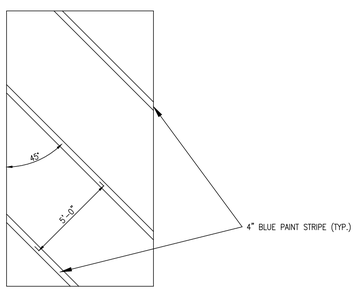

7 / C106 TYPICAL ACCESSIBLE WALKWAY STRIPING DETAIL
NOT TO SCALE

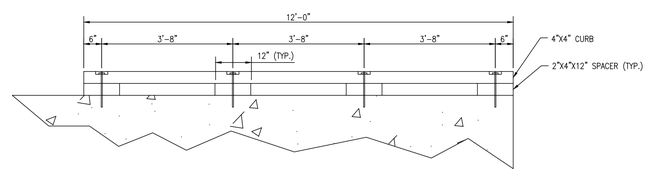

NOTES:

1. ANCHOR BOLTS TO BE ⅜" ø STAINLESS STEEL EPOXY ANCHORS WITH 4-INCHES MINIMUM EMBEDMENT. BOLTS TO HAVE STAINLESS STEEL NUTS AND WASHERS. RECESS NUTS FLUSH WITH TOP OF CURB.
2. ALL TIMBER TO BE PRESSURE TREATED.

8 / C106 CURB DETAIL
SCALE: 1"=2'

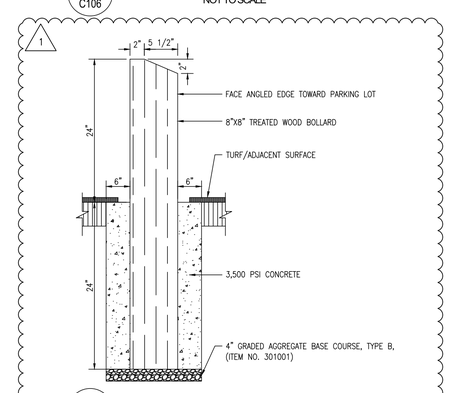

9 / C106 TREATED WOOD BOLLARD DETAIL
NOT TO SCALE

This drawing is the property of Century Engineering, Inc. and is prepared for the exclusive use of its clients at the location indicated. No other use is authorized or intended.

CENTURY ENGINEERING, INC.
ADDRESS: 550 BAY ROAD DOVER, DE 19901
P: (302) 734-9188 F: (302) 734-4589
WEBSITE: www.centuryeng.com
EMAIL: ce@centuryeng.com

REVISIONS

ADDENDUM

DESCRIPTION	DATE
1 NEW TREATED WOOD BOLLARD DETAIL ADDED.	11/10/2020

PROJECT
CONSTRUCTION PLANS
FOR
DELAWARE DIVISION OF FISH & WILDLIFE
GARRISON'S LAKE BOAT RAMP RECONSTRUCTION
LITTLE CREEK HUNDRED, KENT COUNTY, DELAWARE

SHEET TITLE
CONSTRUCTION DETAILS

DIV. OF FISH AND WILDLIFE
BID SET
OCTOBER, 2020

DRAWN	CHK'D/DESIGNER
ECM	AES
SCALE	SHEET NO.
AS NOTED	C106
PROJECT NO. 175013.43	

G:\Projects\175013.00 (DNREC 2017 Engineering QT)\175013.43 (Garrisons Lake Boat Ramp)\CADD FILES\Sheets\Construction Plans\C106_ConstructionDetails.dwg, 11/10/2020 3:55 PM

Standard Detail & Specifications
Construction Site Waste Mgt & Spill Control

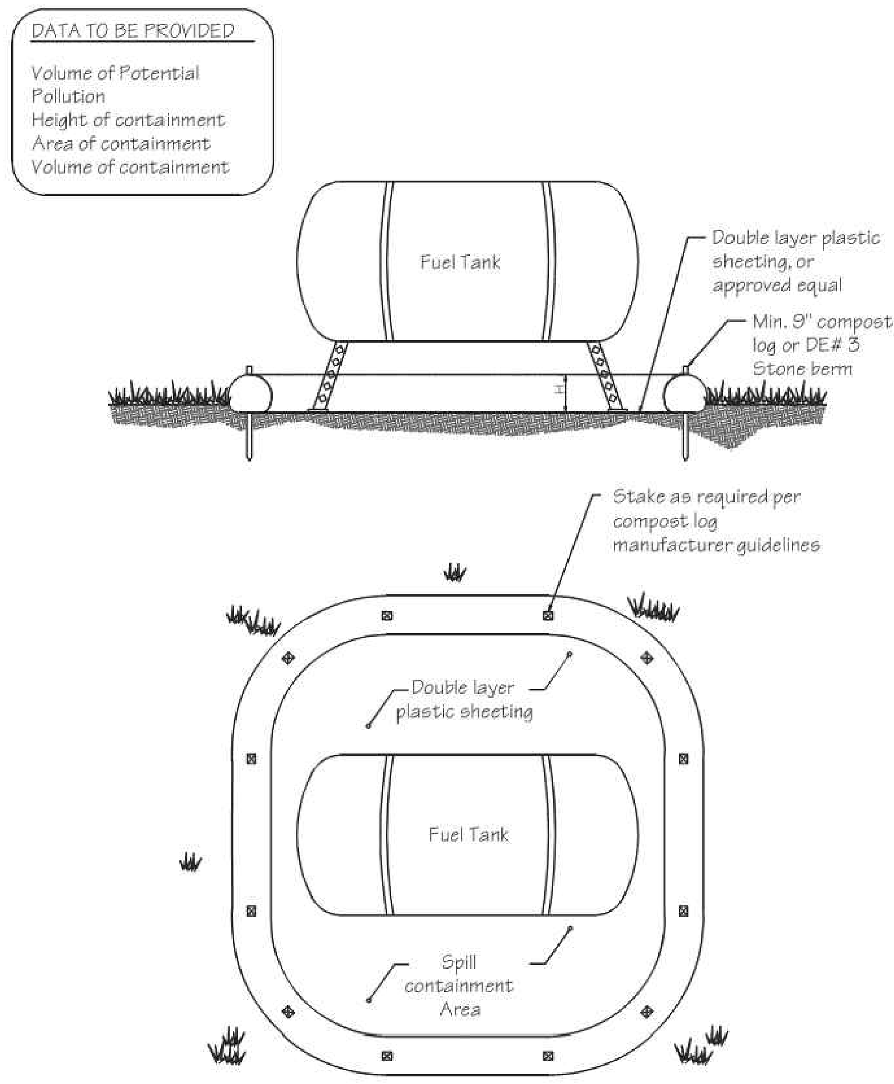

Source:	Symbol:	Detail No.
Delaware ESC Handbook		DE-ESC-3.6.1 Sheet 1 of 5 Effective FEB 2019

Standard Detail & Specifications
Construction Site Waste Mgt & Spill Control

Pollution Prevention – Spill Prevention

1. Fueling should only take place in signed designated areas, away from downstream drainage facilities and watercourses.
2. Fueling must be with nozzles equipped with automatic shut-off to control drips. Do not top off.
3. Protect the areas where equipment or vehicles are being repaired, maintained, fueled or parked from storm water run-on and runoff.
4. Use barriers such as berms to prevent storm water run-on and runoff, and to contain spills.
5. Place a "Fueling Area" sign next to each fueling area.
6. Store hazardous materials such as fuel, solvents, oil and chemicals in secondary containment.
7. Inspect vehicles and equipment for leaks on each day of use. Repair fluid and oil leaks immediately.
8. Absorbent spill clean-up materials and spill kits must be available in fueling areas and on fuel trucks.
9. If fueling is to take place at night, make sure the fueling area is sufficiently illuminated.
10. Properly dispose of used oil, fluids, lubricants and spill clean-up materials.

CLEAN UP SPILLS

1. If it is safe to do so, immediately contain and clean up any chemical and/or hazardous material spills.
2. Properly dispose of used oil, fluids, lubricants and spill clean-up materials.
3. Do not bury spills or wash them down with water.

LEAKS AND DRIPS

1. Use drip pans or absorbent pads at all times. Place under and around leaky equipment.
2. Do not allow oil, grease, fuel or chemicals to drip onto the ground.
3. Have spill kits and clean up material on-site.
4. Repair leaky equipment promptly or remove problem vehicles and equipment from the site. Clean up contaminated soil immediately.
5. Store contaminated waste in sealed containers constructed of suitable material. Label these containers properly.
6. Clean up all spills and leaks. Promptly dispose of waste and spent clean up materials.

Source:	Symbol:	Detail No.
Delaware ESC Handbook		DE-ESC-3.6.1 Sheet 2 of 5 Effective FEB 2019

Standard Detail & Specifications
Construction Site Waste Mgt & Spill Control

Notes:

The Construction Site Pollution Prevention Plan should include the following elements:

1. **Material Inventory**

   Document the storage and use of the following materials:

   a. Concrete
   b. Detergents
   c. Paints (enamel and latex)
   d. Cleaning solvents
   e. Pesticides
   f. Wood scraps
   g. Fertilizers
   h. Petroleum based products

2. **Good housekeeping practices**

   a. Store only enough product required to do the job.
   b. All materials shall be stored in a neat, orderly manner in their original labeled containers and covered.
   c. Substances shall not be mixed.
   d. When possible, all of a product shall be used up prior to disposal of the container.
   e. Manufacturers' instructions for disposal shall be strictly adhered to.
   f. The site foreman shall designate someone to inspect all BMPs daily.

3. **Waste management practices**

   a. All waste materials shall be collected and stored in securely lidded dumpsters in a location that does not drain to a waterbody.
   b. Waste materials shall be salvaged and/or recycled whenever possible.
   c. The dumpsters shall be emptied a minimum of twice per week, or more if necessary. The licensed trash hauler is responsible for cleaning out dumpsters.

Source:	Symbol:	Detail No.
Adapted from USEPA Pub. 840-B-92-002		DE-ESC-3.6.1 Sheet 3 of 5 Effective FEB 2019

Standard Detail & Specifications
Construction Site Waste Mgt & Spill Control

Notes (cont.)

   d. Trash shall be disposed of in accordance with all applicable Delaware laws.
   e. Trash cans shall be placed at all lunch spots and littering is strictly prohibited. Recycle bins shall be placed near the construction trailer.
   f. If fertilizer bags can not be stored in a weather-proof location, they shall be kept on a pallet and covered with plastic sheeting which is overlapped and anchored.

4. **Equipment maintenance practices**

   a. If possible, equipment should be taken to off-site commercial facilities for washing and maintenance.
   b. If performed on-site, vehicles shall be washed with high-pressure water spray without detergents in an area contained by an impervious berm.
   c. Drip pans shall be used for all equipment maintenance.
   d. Equipment shall be inspected for leaks on a daily basis.
   e. Washout from concrete trucks shall be disposed of in a temporary pit for hardening and proper disposal.
   f. Fuel nozzles shall be equipped with automatic shut-off valves.
   g. All used products such as oil, antifreeze, solvents and tires shall be disposed of in accordance with manufacturers' recommendations and local, state and federal laws and regulations.

5. **Spill prevention practices**

   a. Potential spill areas shall be identified and contained in covered areas with no connection to the storm drain system.
   b. Warning signs shall be posted in hazardous material storage areas.
   c. Preventive maintenance shall be performed on all tanks, valves, pumps, pipes and other equipment as necessary.
   d. Low or non-toxic substances shall be prioritized for use.

Source:	Symbol:	Detail No.
Adapted from USEPA Pub. 840-B-92-002		DE-ESC-3.6.1 Sheet 4 of 5 Effective FEB 2019

Standard Detail & Specifications
Construction Site Waste Mgt & Spill Control

Notes (cont.)

   e. Contact information for reporting spills through the DNREC 24-Hour Toll Free Number shall be prominently posted.

6. **Education**

   a. Best management practices for construction site pollution control shall be a part of regular progress meetings.
   b. Information regarding waste management, equipment maintenance and spill prevention shall be prominently posted in the construction trailer.

CONTACT INFORMATION

DNREC 24-Hour Toll Free Number	**800-662-8802**
DNREC Solid & Hazardous Waste Management Section	**302-739-9403**

Source:	Symbol:	Detail No.
Adapted from USEPA Pub. 840-B-92-002		DE-ESC-3.6.1 Sheet 5 of 5 Effective FEB 2019

Standard Detail & Specifications
Sensitive Area Protection

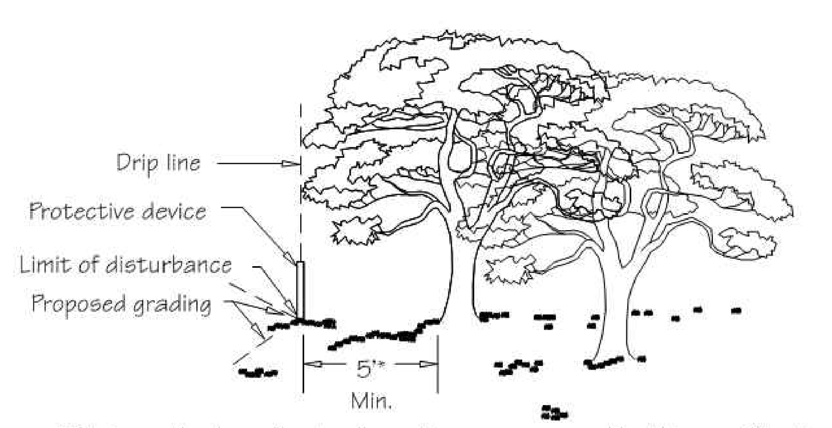

*5' min. setback applies to all sensitve areas covered by this specification.

Location of Sensitive Area Protection

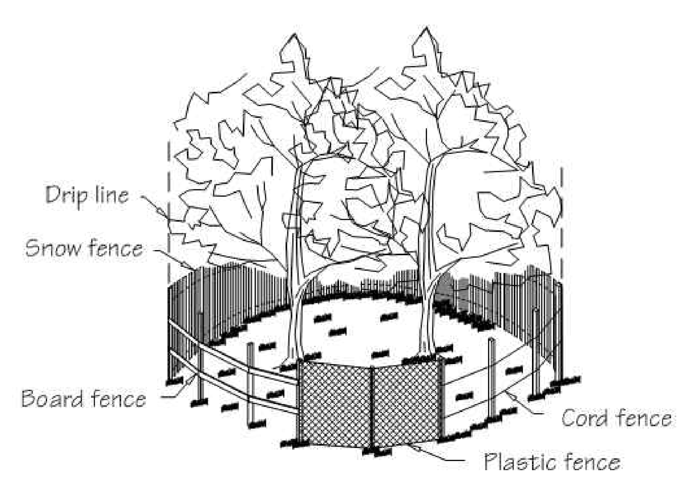

Methods of Sensitive Area Protection

Source:	Symbol:	Detail No.
Adapted from VA ESC Handbook	SAP	DE-ESC-3.7.2 Sheet 1 of 3 Effective FEB 2019

Standard Detail & Specifications
Sensitive Area Protection

Construction Notes:

Fencing shall be installed at the extents of all sensitive areas. For trees, the fencing shall be installed outside the dripline (mature canopy) and at no time within 5 feet of the trunk. Personnel must be instructed to honor protective devices. The devices described are suggested only, and are not intended to exclude the use of other devices which will protect the trees to be retained. If silt fence is to be used for demarcation purposes, appropriate signage shall be provided a minimum of every 20 feet denoting the area as a sensitive area protection zone.

Materials:

1. Snow Fence - Standard 40-inch high snow fence shall be placed at the limits of clearing or construction on standard steel posts set 6 feet apart.
2. Board Fence - Board fencing consisting of 4-inch square posts set securely in the ground and protruding at least 4 feet above the ground shall be placed at the limits of clearing with a minimum of two horizontal boards between posts. For tree proteciton, if it is not practical to erect a fence at the drip line, construct a triangular fence nearer the trunk. The limits of clearing will still be located at the drip line, since the root zone within the drip line will still require protection.
3. Plastic Fencing - 40-inch high "international orange" plastic (polyethylene) web fencing secured to conventional metal "T" or "U" posts driven to a minimum depth of 18 inches on 6-foot minimum centers shall be installed at the limits of clearing. The fence should have the following minimum physical qualities:

a.	Tensile yield:	Average 2,000 lbs. per 4-foot width (ASTM D638)
b.	Ultimate tensile yield:	Average 2,900 lbs. per 4-foot width (ASTM D638)
c.	Elongation at break (%):	Greater than 1000% (ASTM D638)
d.	Chemical resistance:	Inert to most chemicals and acids

Source:	Symbol:	Detail No.
Adapted from VA ESC Handbook	SAP	DE-ESC-3.7.2 Sheet 2 of 3 Effective FEB 2019

Standard Detail & Specifications
Sensitive Area Protection

4. Cord Fence - Posts with a minimum size of 2 inches square or 2 inches in diameter set securely in the ground and protruding at least 4 feet above the ground shall be placed at the limits of clearing with two rows of cord 1/4-inch or thicker at least 2 feet apart running between posts with strips of colored surveyor's flagging tied securely to the string at intervals no greater than 3 feet.
5. Earth Berms - Temporary earth berms shall be constructed according to specifications for a Temporary Earth Dike with the base of the berm on the sensitive area side located along the limits of clearing. Earth berms may not be used for this purpose if their presence will conflict with drainage patterns.
6. Trunk Armoring (Tree Protection Only) - As a last resort, a tree trunk can be armored with burlap wrapping and 2-inch studs wired vertically no more than 2 inches apart to a height of 5 feet encircling the trunk. If this alternative is used, the root zone within the drip line will still require protection. Nothing should ever be nailed to a tree.

Maintenance:

Fencing and armoring devices shall be in place before any excavation or grading is begun, shall be kept in good repair for the duration of construction activities, and shall be the last items removed during the final cleanup after the completion of the project.

Source:	Symbol:	Detail No.
Adapted from VA ESC Handbook	SAP	DE-ESC-3.7.2 Sheet 3 of 3 Effective FEB 2019

This drawing is the property of Century Engineering, Inc. and is prepared for the exclusive use of its clients at the location indicated. No other use is authorized or intended.

CENTURY ENGINEERING, INC.
ADDRESS: 550 BAY ROAD DOVER, DE 19901
P: (302) 734-9188 F: (302) 734-4589
WEBSITE: www.centuryeng.com
EMAIL: cei@centuryeng.com

REVISIONS

ADDENDUM

DESCRIPTION DATE

PROJECT

CONSTRUCTION PLANS FOR DELAWARE DIVISION OF FISH & WILDLIFE GARRISON'S LAKE BOAT RAMP RECONSTRUCTION

LITTLE CREEK HUNDRED, KENT COUNTY, DELAWARE

SHEET TITLE

EROSION & SEDIMENT CONTROL DETAILS

DIV. OF FISH AND WILDLIFE BID SET

OCTOBER, 2020

DRAWN	CHK'D/DESIGNER
ECM	AES
SCALE	SHEET NO.
AS NOTED	C107
PROJECT NO. 175013.43	

Standard Detail & Specifications

Topsoiling

Construction Notes:

1. **Site Preparation** (Where Topsoil is to be added)

   Note: When topsoiling, maintain needed erosion and sediment control practices such as diversions, grade stabilization structures, berms, dikes, waterways and sediment basins.

   a. Grading - Grades on the areas to be topsoiled which have been previously established shall be maintained.

   b. Liming - Where the topsoil is either highly acid or composed of heavy clays, ground limestone shall be spread at the rate of 4-8 tons/acre (200-400 pounds per 1,000 square feet). Lime shall be distributed uniformly over designated areas and worked into the soil in conjunction with tillage operations as described in the following procedures.

   c. Tilling - After the areas to be topsoiled have been brought to grade, and immediately prior to dumping and spreading the topsoil, the subgrade shall be loosened by discing or by scarifying to a depth of a least 3 inches to permit bonding of the topsoil to the subsoil. Pack by passing a bulldozer up and down over the entire surface area of the slope to create horizontal erosion check slots to prevent topsoil from sliding down the slope.

2. **Topsoil Material and Application**

   Note: Topsoil salvaged from the existing site may often be used but it should meet the same standards as set forth in these specifications. The depth of topsoil to be salvaged shall be no more than the depth described as a representative profile for that particular soil type as described in the soil survey published by USDA-SCS in cooperation with Delaware Agricultural Experimental Station.

Source:	Symbol:	Detail No.
USDA - NRCS		DE-ESC-3.4.1 Sheet 1 of 2 Effective FEB 2019

Standard Detail & Specifications

Topsoiling

Construction Notes (cont.)

a. Materials - Topsoil shall be a loam, sandy loam, clay loam, silt loam, sandy clay loam, loamy sand or other soil as approved by an agronomist or soil scientist. It shall not have a mixture of contrasting textured subsoil and contain no more than 5 percent by volume of cinders, stones, slag, coarse fragment, gravel, sticks, roots, trash or other extraneous materials larger than 1-1/2 inches in diameter. Topsoil must be free of plants or plant parts of bermudagrass, quackgrass, Johnsongrass, nutsedge, poison ivy, thistles, or others as specified. All topsoil shall be tested by a reputable laboratory for organic matter content, pH and soluble salts. A pH of 6.0 to 7.5 and an organic content of not less than 1.5 percent by weight is required. If pH value is less than 6.0 lime shall be applied and incorporated with the topsoil to adjust the pH to 6.5 or higher. Topsoil containing soluble salts greater than 500 parts per million shall not be used.

Note: No sod or seed shall be placed on soil which has been treated with soil sterilants or chemicals used for weed control until sufficient time has elapsed to permit dissipation of toxic materials.

b. Grading - The topsoil shall be uniformly distributed and compacted to a minimum of four (4) inches. Spreading shall be performed in such a manner that sodding or seeding can proceed with a minimum of additional soil preparation and tillage. Any irregularities in the surface resulting from topsoiling or other operations shall be corrected in order to prevent the formation of depressions or water pockets. Topsoil shall not be placed while in a frozen or muddy condition, when the subgrade is excessively wet, or in a condition that may otherwise be detrimental to proper grading and seedbed preparation.

Note: Topsoil substitutes or amendments as approved by a qualified agronomist or soil scientist, may be used in lieu of natural topsoil. Compost material used to improve the percentage of organic matter shall be provided by a certified supplier.

Compost amendments that are intended to meet specific post-construction stormwater management goals shall further meet the requirements of **Appendix 3.06.2 Post Construction Stormwater Management BMP Standards and Specifications, Section 14.0 Soil Amendments.**

Source:	Symbol:	Detail No.
USDA - NRCS		DE-ESC-3.4.1 Sheet 2 of 2 Effective FEB 2019

Standard Detail & Specifications

Pumping Pit - Type 2

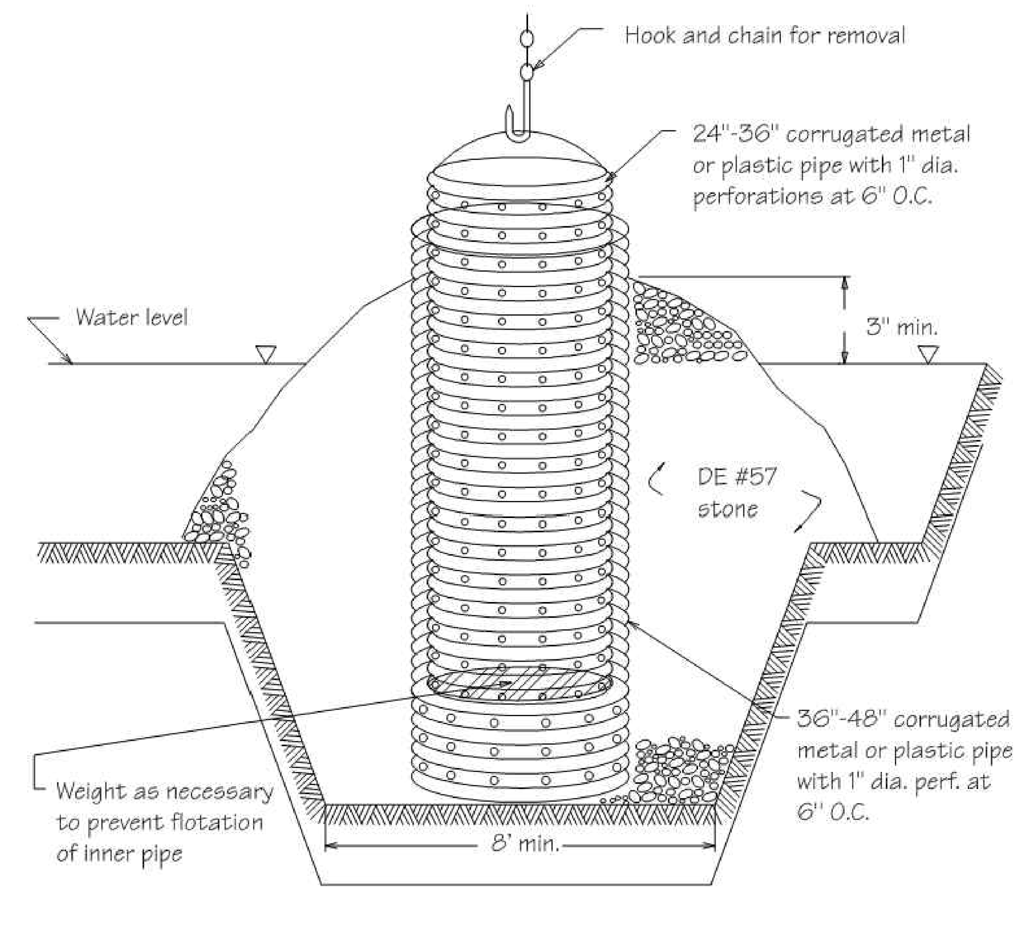

Section

Source:	Symbol:	Detail No.
Adapted from MD Stds. & Specs. for ESC	PP-2	DE-ESC-3.2.2.2 Sheet 1 of 2 Effective FEB 2019

Standard Detail & Specifications

Pumping Pit - Type 2

Construction Notes:

1. Pit shall have a minimum bottom width of 8'.
2. The inside standpipe should be constructed by perforating a 24" to 36" diameter corrugated or PVC pipe. The perforations shall be 1/2" X 6" slits or 1" diameter holes 6" on center.
3. The outside pipe shall be at least 12" larger in diameter than the inside pipe.
4. After installing the standpipes, the pit surrounding the standpipes should then be backfilled with DE #57 aggregate. The height of the stone shall be a min. 3" above the design high water elevation in the trap or basin.
5. The standpipes should extend 12" to 18" above the design high water elevation in the trap or basin.

NOTE: If discharge will be pumped directly to a storm drainage system, the standpipe must be wrapped with Type GD-II geotextile fabric before installation. If desired, 1/2" hardware cloth may be placed around the standpipe, prior to attaching the geotextile fabric. This will increase the rate of water seepage into the pipe.

Source:	Symbol:	Detail No.
Adapted from MD Stds. & Specs. for ESC	PP-2	DE-ESC-3.2.2.2 Sheet 2 of 2 Effective FEB 2019

Standard Detail & Specifications

Concrete Washout

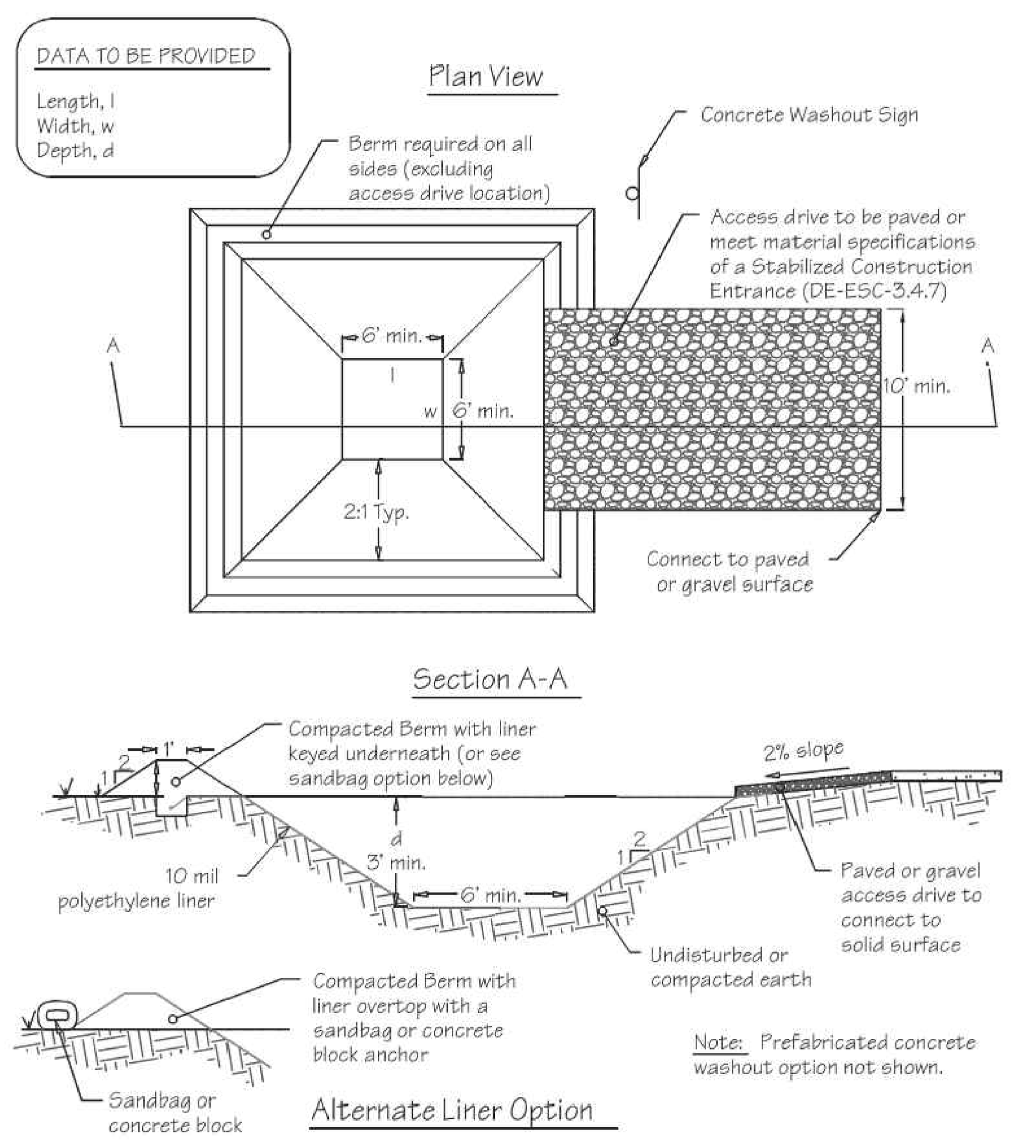

Source:	Symbol:	Detail No.
Adapted from Colorado Urban Storm Drainage Criteria Manual, Vol 3	CW	DE-ESC-3.6.2 Sheet 1 of 2 Effective FEB 2019

Standard Detail & Specifications

Concrete Washout

Construction Notes:

1. Locate washout area a minimum of 50 feet from open channels, stormdrain inlets, wetlands or waterbodies.
2. Locate washout area so that it is accessible to concrete equipment (service with a minimum 10 foot wide gravel accessway), but so it is not in a highly active construction area causing accidental damage.
3. Minimum dimensions for prefabricated units are 4 feet by 4 feet by 1 foot deep with a minimum 4mil polyethylene plastic liner. Minimum dimensions for constructed concrete washout areas are 6 feet by 6 feet by 3 feet deep, with a minimum 10mil polyethylene liner, 2:1 side slopes, and a 1 foot high by 1 foot wide compacted fill berm.
4. The liner must be free of tears or holes and placed over smooth surfaces to prevent puncturing. For excavated washouts, anchor the liner underneath the berm or overtop with sandbags or concrete blocks to hold in place.
5. Provide a sign designating the washout area, and for large construction sites, provide signs throughout directing traffic to its location.
6. Allow washed out concrete mixture to harden through evaporation of the wastewater. Once the facility has reached 75 percent of its capacity, remove the hardened concrete by reusing the broken aggregate onsite, recycling, or disposing of offsite. The hardened material can be buried on site with minimum of 1 foot of clean, compacted fill.
7. Apply a new liner before reusing the station for additional washouts after maintenance has occurred.

Source:	Symbol:	Detail No.
Adapted from Colorado Urban Storm Drainage Criteria Manual, Vol 3	CW	DE-ESC-3.6.2 Sheet 2 of 2 Effective FEB 2019

Standard Detail & Specifications

Dust Control

Temporary Methods:

1. Mulches - See **DE-ESC-3.4.5**, Standard Detail and Specifications for Mulching.
2. Vegetative cover - See **DE-ESC-3.4.3**, Std. Detail and Specifications for Vegetative Stabilization.
3. Adhesives - Use on mineral soils only (not effective on muck soils). Keep traffic off these areas. The following table may be used for general guidance.

Type of Emulsion	Water Dilution	Type of Nozzle	Apply Gal/Ac.
Latex emulsion	12.5:1	Fine spray	235
Resin-in-water emulsion	4:1	Fine spray	300
Acrylic emulsion (non-trafffic)	7:1	Coarse spray	450
Acrylic emulsion (traffic)	3.5:1	Coarse spray	350

4. Tillage - For emergency temporary treatment, scarify the soil surface to prevent or reduce the amount of blowing dust until a more appropriate solution can be implemented. Begin the tillage operation on the windward side of the site using a chisel-type plow for best results.
5. Sprinkling - Sprinkle site with water until the surface is moist . Repeat as needed.
6. Calcium Chloride - Apply as flakes or granular material with a spreader at a rate that will keep the soil surface moist. Re-apply as necessary.
7. Barriers - Place barriers such as soild board fences, snow fences, hay bales, etc. at right angles to the prevailing air currents at intervals of approx. 10X their height.

Permanent Methods:

1. Vegetative cover - See **DE-ESC-3.4.3**, Std. Detail and Specifications for Vegetative Stabilization.
2. Stone - Apply layer of crushed stone or coarse gravel to protect soil surface.

Source:	Symbol:	Detail No.
Adapted from VA ESC Handbook		DE-ESC-3.4.8 Sheet 1 of 1 Effective FEB 2019

This drawing is the property of Century Engineering, Inc. and is prepared for the exclusive use of its clients at the location indicated. No other use is authorized or intended.

CENTURY ENGINEERING, INC.
ADDRESS: 550 BAY ROAD DOVER, DE 19901
P: (302) 734-9188 F: (302) 734-4589
WEBSITE: www.centuryeng.com
EMAIL: cei@centuryeng.com

REVISIONS

ADDENDUM

DESCRIPTION	DATE

PROJECT
CONSTRUCTION PLANS FOR DELAWARE DIVISION OF FISH & WILDLIFE
GARRISON'S LAKE BOAT RAMP RECONSTRUCTION
LITTLE CREEK HUNDRED, KENT COUNTY, DELAWARE

SHEET TITLE
EROSION & SEDIMENT CONTROL DETAILS

DIV. OF FISH AND WILDLIFE
BID SET
OCTOBER, 2020

DRAWN	CHK'D/DESIGNER
ECM	AES
SCALE	SHEET NO.
AS NOTED	C108
PROJECT NO.	
175013.43	

G:\Projects\175013.00 (DNREC 2017 Engineering OE)\175013.43 (Garrisons Lake Boat Ramp)\CADD FILES\Sheets\Construction Plans\C108_E&SDetails.dwg, 11/10/2020 3:56 PM

Standard Detail & Specifications
Mulching

1. Materials and Amounts

a. *Straw* - Straw shall be unrotted small grain straw applied at the rate of 1-1/2 to 2 tons per acre, or 70 to 90 pounds (two bales) per 1,000 square feet. Mulch materials shall be relatively free of weeds and shall be free of noxious weeds such as; thistles, Johnsongrass, and quackgrass. Spread mulch uniformly by hand or mechanically. For uniform distribution of hand spread mulch, divide area into approximately 1,000 square feet sections and place 70-90 pounds (two bales) of mulch in each section.

b. *Wood chips* - Apply at the rate of approximately 6 tons per acre or 275 pounds per 1,000 square feet when available and when feasible. These are particularly well suited for utility and road rights-of-way. If wood chips are used, increase the application rate of nitrogen fertilizer by 20 pounds of N per acre (200 pounds of 10-10-10 or 66 pounds of 30-0-0 per acre).

c. *Hydraulically applied mulch* -The following conditions apply to hydraulically applied mulch:

i. Definitions:

a. Wood fiber mulch shall consist of specially prepared wood that has been processed to a uniform state, is packaged for sale as a hydraulic mulch for use with hydraulic seeding equipment, and consists of a minimum of 70% virgin or recycled wood fiber combined with 30% paper fiber and additives.

b. Blended fiber mulch shall consist of any hydraulic mulch that contains greater than 30% paper fiber. The paper component must consist of specially prepared paper that has been processed to a uniform fibrous state and is packaged for sale as a hydraulic mulch for use with hydraulic seeding equipment.

c. A bonded fiber matrix (BFM) consists of long strand, specially prepared wood fibers that have been processed to a uniform state held together by a water resistant bonding agent. BFMs shall contain no paper (cellulose) mulch but may contain small percentages of synthetic fibers to enhance performance.

d. Refer to **Figure 3.4.5a** for conditions and limitations of use for each of the above categories of hydraulic mulch.

ii. All components of the hydraulically applied mulches shall be pre-packaged by the manufacturer to assure material performance. Field mixing of the mulch components is acceptable, but must be done per manufacturers recommendations to ensure the proper results.

iii. Hydraulic mulches shall be applied with a viable seed and at manufacturer's recommended rates. Increased rates may be necessary based on site conditions.

iv. Hydraulically applied mulches and additives shall be mixed according to manufacturers recommendations.

iv. Materials within this category shall only be used when hydraulically applied mulch has been specified for use on the approved Sediment and Stormwater Plan, or supplemental approval from the plan approval agency has been obtained in writing for a specific area.

Source:	Symbol:	Detail No.
Delaware ESC Handbook & Filtrexx™ International		**DE-ESC-3.4.5** Sheet 1 of 3 Effective FEB 2019

Standard Detail & Specifications
Mulching

v. Application:

a. Apply product to geotechnically stable slopes that have been designed and constructed to divert runoff away from the face of the slope.

b. Do not apply to saturated soils, or if precipitation is anticipated within 24-48 hours.

c. During the spring (March 1 to May 31) and fall (September 1 to November 30) seasons, hydraulic mulches may be applied in a one-step process where all components are mixed together in single-tank loads. It is recommended that the product be applied from opposing directions to achieve optimum soil coverage.

d. During the summer (June 1 to August 31) and winter (December 1 to February 28) seasons, the following two-step process is required:

Step One– Mix and apply seed and soil amendments with a small amount of mulch for visual metering.

Step Two – Mix and apply mulch at manufacturers recommended rates over freshly seeded surfaces. Apply from opposing directions to achieve optimum soil coverage.

e. Minimum curing temperature is 40° F (4° C). The best results and more rapid curing are achieved at temperatures exceeding 60° F (15° C). Curing times may be accelerated in high temperature, low humidity conditions on dry soils.

vi. Recommended application rates are for informational purposes only. Conformance with this standard and specification shall be performance-based and requires **100% soil coverage**. Any areas with bare soil showing shall be top dressed until full coverage is achieved.

d. *Compost blanket (CB)* - Loosely applied with a pneumatic blower so that a 1" compost blanket uniformly covers the **soil with 100% coverage**. This application can be used with seed to promote germination by applying the approved seed mix directly into the loosely blown compost. The compost blanket performs best on slopes less than 2:1 and requires no mulch anchoring.

2. Anchoring mulch - Mulch must be anchored immediately to minimize loss by wind or water. This may be done by one of the following methods, depending upon size of area, erosion hazard, and cost.

a. *Crimping* - A crimper is a tractor drawn implement designed to punch and anchor mulch into the top two (2) inches of soil. This practice affords maximum erosion control but is limited to flatter slopes where equipment can operate safely. On sloping land, crimping should be done on the contour whenever possible.

b. *Tracking* - Tracking is the process of cutting mulch (usually straw) into the soil using a bulldozer or other equipment that runs on cleated tracks. Tracking is used primarily on slopes 3:1 or steeper and should be done up and down the slope with cleat marks running across the slope.

c. *Liquid mulch binders* - Applications of liquid mulch binders should be heavier at edges, in valleys, and at crests of banks and other areas where the mulch will be moved by wind or water. All other areas should have a uniform application of binder. The use of synthetic binders is the preferred method of mulch binding and should be applied at the rates recommended by the manufacturer.

d. *Paper fiber* - The fiber binder shall be applied at a net dry weight of 750 lbs/ac. The wood cellulose fiber shall be mixed with water, and the mixture shall contain a maximum of 50 lbs. of wood cellulose fiber per 100 gallons.

e. *Nettings* - Synthetic or organic nettings may be used to secure straw mulch. Install and secure according to the manufacturers recommendations.

Source:	Symbol:	Detail No.
Delaware ESC Handbook & Filtrexx™ International		**DE-ESC-3.4.5** Sheet 2 of 3 Effective FEB 2019

Standard Detail & Specifications
Mulching

MULCHING MATERIAL SELECTION GUIDE

Percent Slope	Type of Mulch / App. Rate*	Dec. 1 to Feb. 28(29)	March 1 to May 31	June 1 to Aug. 31	Sept. 1 to Nov. 30
Less than 2%	Blended Fiber @ 2000 lbs/ac. minimum	xxxxxxxxxxxxxxxxxxxx	OK (1 lb/ac)	xxxxxxxxxxxxxxxxxxxx	OK (1 lb/ac)
	Wood Fiber @ 2000 lbs/ac. min;	xxxxxxxxxxxxxxxxxxxx	OK	xxxxxxxxxxxxxxxxxxxx	OK
	BFM @ 3000 lbs/ac.	xxxxxxxxxxxxxxxxxxxx	OK	xxxxxxxxxxxxxxxxxxxx	OK
	Straw @ 2 Tons/ac. Min:	OK	OK	OK	OK
	Stabilization Matting**	OK	OK	OK	OK
	1" Compost Blanket (CB)	OK	OK	OK	OK
2% to 5.9%	Wood Fiber @ 2000 lbs/ac. min	xxxxxxxxxxxxxxxxxxxx	OK	xxxxxxxxxxxxxxxxxxxx	OK
	BFM @ 3000-3500 lbs/ac. min	OK	OK	OK	OK
	Straw @ 2 Tons/ac. min:	OK	OK	OK	OK
	Stabilization Matting**	OK	OK	OK	OK
	1" Compost Blanket (CB)	OK	OK	OK	OK
6% to 10.9%	Wood Fiber @ 2000-2500 lbs/ac. min.	xxxxxxxxxxxxxxxxxxxx	OK	xxxxxxxxxxxxxxxxxxxx	OK
	BFM @ 3500-4000 lbs/ac. min.	OK	OK	OK	OK
	Straw @ 2 Tons/ac. min.	OK	OK	OK	OK
	Stabilization Matting**	OK	OK	OK	OK
	1" Compost Blanket (CB)	OK	OK	OK	OK
11% to 24.9%	Wood Fiber @ 2500-3000 lbs/ac. min.	xxxxxxxxxxxxxxxxxxxx	OK	xxxxxxxxxxxxxxxxxxxx	OK
	BFM @ 3500-4000 lbs/ac. min.	OK	OK	OK	OK
	Straw @ 2 Tons/ac. min;	OK	OK	OK	OK
	Stabilization Matting**	OK	OK	OK	OK
	1" Compost Blanket (CB)	OK	OK	OK	OK
25% to 33%	Wood Fiber @ 2500-3000 lbs/ac. min.	xxxxxxxxxxxxxxxxxxxx	OK	xxxxxxxxxxxxxxxxxxxx	OK
	BFM @ 3500-4000 lbs/ac. min.	OK	OK	OK	OK
	Straw @ 2 Tons/ac. min.	OK	OK	OK	OK
	Stabilization Matting**	OK	OK	OK	OK
	1" Compost Blanket (CB)	OK	OK	OK	OK
33% and up	Wood Fiber @ 2500-3000 lbs/ac. min.	xxxxxxxxxxxxxxxxxxxx	OK	xxxxxxxxxxxxxxxxxxxx	OK
	Straw @ 2 Tons/ac. min***	OK	OK	OK	OK
	Stabilization Matting**	OK	OK	OK	OK
	1" Compost Blanket (CB)	OK	OK	OK	OK
			2:1 Max.	2:1 Max.	2:1 Max.

* Note: Manufacturers Recommended Rates for informational purposes only. Performance standard requires 100% soil coverage.
** Note: Stabilization Matting must be applied in accordance with Section 3.4.6 of the Delaware ESC Handbook.
*** Note: Straw applied at rates greater than 2 tons per acre (up to 4 tons per acre) must be mulched (this does not apply to sapling blankets).
OK = Acceptable to use during this time period.
xxx = Not acceptable to use during this time period.
All application rates are minimums

Source:	Symbol:	Detail No.
Delaware ESC Handbook & Filtrexx™ International		**DE-ESC-3.4.5** Sheet 3 of 3 Effective FEB 2019

Standard Detail & Specifications
Portable Sediment Tank

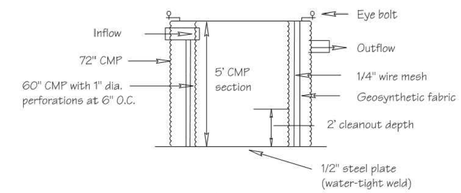

Section

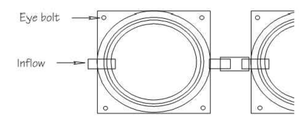

Plan

Construction Notes:

1. Required storage volume = 1 c.f. storage/1 gpm pump discharge.
2. Tanks may be connected in series to provide required storage.

Source:	Symbol:	Detail No.
Adapted from MD Stds. & Specs. for ESC	ST	**DE-ESC-3.2.1.1** Sheet 1 of 1 Effective FEB 2019

Standard Detail & Specifications
Vegetative Stabilization

TEMPORARY SEEDING BY RATES, DEPTHS AND DATES

Mix #	Species[6]	Seeding Rate lb/Ac[5]	Seeding Rate lb/1000 sq.ft.	Optimum Seeding Dates [1] O = Optimum Planting Period; A = Acceptable Planting Period: Coastal Plain 2/1-4/30	Coastal Plain [2] 5/1-8/14	Coastal Plain 8/15-10/31	Piedmont 3/1-4/30	Piedmont [2] 5/1-7/31	Piedmont 8/1-10/31	All 10/31-2/1	Planting Depth[3]
	Certified Seed										
1	Barley	125	4	O	A	O	O	A	O		1-2 inches 2-3" sandy soils
2	Oats	125	4	O	A	A	O	A	A		1-2 inches 2-3" sandy soils
3	Rye	125	4	O	A	O	O	A	O	A	1-2 inches 2-3" sandy soils
4	Perennial Ryegrass	125	4	O	A	A	O	A	O		0.5 inches 1-2" sandy soils
5	Annual Ryegrass	125	4	O	A	O	O	A	O	A	0.5 inches 1-2" sandy soils
6	Winter Wheat	125	4	O	A	O	O	A	O	A	1-2 inches 2-3" sandy soils
7	Foxtail Millet	30 PLS	0.7		O			O			0.5 inches 1-2" sandy soils
8	Pearl Millet	20 PLS	0.5		O			O			0.5 inches 1-2" sandy soils

1. Winter seeding requires 3 tons per acre of straw mulch for proper stabilization.
2. May be planted throughout summer if soil moisture is adequate or seeded area can be irrigated.
3. Applicable on slopes 3:1 or less.
4. Fifty pounds per acre of Annual Lespedeza may be added to 1/2 the seeding rate of any of the above species.
5. Use varieties currently recommended for Delaware. Contact a County Extension Office for information.
6. Warm season grasses such as Millet or Weeping Lovegrass may be used between 5/1 and 9/1 if desired. Seed at 3-5 lbs. per acre. Good on low fertility and acid areas. Seed after frost through summer at a depth of 0.5".

NOTE: Alternative seed mixes may be used with prior approval from the Department or Delegated Agency.

NOTE: TEMPORARY SEED MIX SHALL BE DNREC TEMPORARY MIX #3, #5, OR #6.

Source:	Symbol:	Detail No.
Delaware ESC Handbook		**DE-ESC-3.4.3** Sheet 1 of 4 Effective FEB 2019

Standard Detail & Specifications
Vegetative Stabilization

PERMANENT SEEDING AND SEEDING DATES

Mix No.	Seeding Mixtures: Certified Seed[7] / Well Drained Soils	Seeding Rate[1] lb/Ac	lb/1000 sq.ft.	Optimum Seeding Dates [2] O = Optimum Planting Period A = Acceptable Planting Period: Coastal Plain 2/1-4/30	Coastal Plain 5/1-8/14	Coastal Plain 8/15-10/31	Piedmont 3/1-4/30	Piedmont 5/1-7/31	Piedmont 8/1-10/31	All[4] 10/31-2/1	Remarks
1	Tall Fescue	140	3.2	A	O	A	A	O	A	Add 100 lbs./ac. Winter Rye	Good erosion control mix. Tolerant of low fertility soils. Lovegrass very difficult to mow; Germinates only in hot weather
	Weeping Lovegrass	10	0.23								
2	Deertongue	30	0.69	A	O	A	A	O	A	Add 100 lbs./ac. Winter Rye	Good erosion control mix. Tolerant of low fertility soils. Good wildlife cover and food
	Sheep Fescue	30	0.69								
	Common Lespedeza[5] inoculated	15	0.35								
3	Tall Fescue (Turf-type) **or**	50	1.15	O	A	O	O	A	O	Add 100 lbs./ac. Winter Rye	Good erosion control mix. Tall Fescue for droughty conditions. Creeping Red Fescue for heavy shade. Flatpea to suppress woody vegetation.
	Strong Creeping Red Fescue **or**	50	1.15								
	Perennial Ryegrass	50	1.15								
	plus Flatpea[5]	15	0.34								
4	Strong Creeping Red Fescue	100	2.3	O	A	O	O	A	O	Add 100 lbs./ac. Winter Rye	Suitable waterway mix. Canada Bluegrass more drought tolerant. Use Redtop for increased drought tolerance.
	Kentucky Bluegrass	70	1.61								
	Perennial Ryegrass **or**	15	0.35								
	Redtop	5	0.11								
	plus White Clover[5]	3	0.07								
5	Switchgrass[7] **or**	10	0.23		O			O			Native warm-season mixture. Tolerant of low fertility soils. Drought tolerant. Poor shade tolerance. N fertilizer discouraged - weeds
	Coastal Panicgrass	10	0.23								
	Big Bluestem	5	0.11								
	Little Bluestem	5	0.11								
	Indian Grass	5	0.1								
6	Tall Fescue (turf-type) (Blend of 3 cultivars)	150	3.5	O	A	O	O	A	O		Managed filter strip for nutrient uptake.
7	Tall Fescue	150	3.5	O	A	O	O	A	O		Three cultivars of Kentucky Bluegrass. Traffic tolerant.
	Ky. Bluegrass (Blend)	20	0.46								
	Perennial Ryegrass	20	0.46								
8	Big Bluestem[7]	10	0.23	O	A		O	A			All species are native. Indian Grass and Bluestem have fluffy seeds. Plant with a specialized native seed drill.
	Indian Grass[7]	10	0.23								
	Little Bluestem[7]	8	0.18								
	Creeping Red Fescue	30	0.69								
	plus one of:										
	Partridge Pea	5	0.11								Creeping Red Fescue will provide erosion protection while the warm season grasses get established.
	Bush Clover	3	0.07								
	Wild Indigo	3	0.07								
	Showy Tick-Trefoil	2	0.05								

NOTE: Alternative seed mixes may be used with prior approval from the Department or Delegated Agency.

Source:	Symbol:	Detail No.
Delaware ESC Handbook		**DE-ESC-3.4.3** Sheet 2 of 4 Effective FEB 2019

Standard Detail & Specifications
Vegetative Stabilization

PERMANENT SEEDING AND SEEDING DATES (cont.)

Mix No.	Seeding Mixtures: Poorly Drained Soils	Seeding Rate[1] lb/Ac	lb/1000	Optimum Seeding Dates [2] O = Optimum Planting Period A = Acceptable Planting Period: Coastal Plain 2/1-4/30	Coastal Plain 5/1-8/14	Coastal Plain 8/15-10/31	Piedmont 3/1-4/30	Piedmont 5/1-7/31	Piedmont 8/1-10/31	All[4] 10/31-2/1	Remarks
9	Redtop	75	1.72	O	A	O	O	A	O	Add 100 lbs./ac. Winter Rye	Quick stabilization of disturbed sites and waterways
	Creeping Bentgrass	35	0.8								
	Sheep Fescue	30	0.69								
	Rough Bluegrass	45	1								
10	Soft Rush[5]	10	0.23	A		O	A		O		Good wildlife cover, wetland cover and wetland revegetation.
	Residential Lawns										
11	Tall Fescue	100	2.3	O	A	O	O	A	O		High value, high maintenance, light traffic, irrigation necessary. Well drained soils, full sun.
	Perennial Ryegrass	25	0.57								
	Kentucky Bluegrass Blend	30	0.69								
12	Tall Fescue	100	2.3	O	A	O	O	A	O		Moderate value, low maintenance, traffic tolerant
	Perennial Ryegrass	25	0.57								
	Sheep Fescue	25	0.57								
13	Creeping Red Fescue	25	0.57	O	A	O	O	A	O		Shade tolerant, moderate traffic tolerance, moderate maintenance.
	Chewings Fescue	50	1.15								
	Rough Bluegrass	20	0.4								
	Kentucky Bluegrass	20	0.4								
14	Creeping Red Fescue	50	1.15	O	A	O	O	A	O		Shade tolerant, moisture tolerant.
	Rough Bluegrass **or**	90	2.1								
	Chewings Fescue										
15	K-31 Tall Fescue	150	3.5	O	A	O	O	A	O		Monoculture, but performs well alone in lawns. Discouraged.

1. When hydroseeding is the chosen method of application, this total rate of seed should be increased by 25%.
2. Winter seeding requires 3 tons per acre of straw mulch. Planting dates listed above are average for Delaware. These dates may require adjustment to reflect local conditions.
3. All seed shall meet the minimum purity and minimum germination percentages recommended by the Delaware Department of Agriculture. The maximum % of weed seeds shall be in accordance with Section 1, Chapter 24, Title 3 of the Delaware Code.
4. Cool season species may be planted throughout summer if soil moisture is adequate or seeded area can be irrigated.
5. All leguminous seed must be inoculated.
6. Warm season grass mix and Reed Canary Grass cannot be mowed more than 4 times per year.
7. Warm season grasses require a soil temperature of at least 50 degrees in order to germinate, and will remain dormant until then.

NOTE: Alternative seed mixes may be used with prior approval from the Department or Delegated Agency.

NOTE: PERMANENT SEED MIX SHALL BE DNREC PERMANENT MIX #9 FOR WET GROUND AREAS, AND SEED MIX #12 FOR DRY GROUND AREAS.

Source:	Symbol:	Detail No.
Delaware ESC Handbook		**DE-ESC-3.4.3** Sheet 3 of 4 Effective FEB 2019

Standard Detail & Specifications
Vegetative Stabilization

Construction Notes:

1. Site Preparation

a. Prior to seeding, install needed erosion and sediment control practices such as diversions, grade stabilization structures, berms, dikes, grassed waterways, and sediment basins.

b. Final grading and shaping is not necessary for temporary seedings.

2. Seedbed Preparation

It is important to prepare a good seedbed to insure the success of establishing vegetation. The seedbed should be well prepared, loose, uniform, and free of large clods, rocks, and other objectionable material. The soil surface should not be compacted or crusted.

3. Soil Amendments

a. Lime - Apply liming materials based on the recommendations of a **soil test** in accordance with the approved nutrient management plan. If a nutrient management plan is not required, apply dolomitic limestone at the rate of 1 to 2 tons per acre. Apply limestone uniformly and incorporate into the top 4 to 6 inches of soil.

b. Fertilizer - Apply fertilizer based on the recommendations of a **soil test** in accordance with the approved nutrient management plan. If a nutrient management plan is not required, apply a formulation of 10-10-10 at the rate of 600 pounds per acre. Apply fertilizer uniformly and incorporate into the top 4 to 6 inches of soils.

4. Seeding

a. For **temporary stabilization**, select a mixture from **Sheet 1 .** For a **permanent stabilization**, select a mixture from **Sheet 2** or **Sheet 3** depending on the conditions. Alternative seed mixes may be used with prior approval from the Department or Delegated Agency.

b. Apply seed uniformly with a broadcast seeder, drill, cultipacker seeder or hydroseeder. All seed will be applied at the recommended rate and planting depth.

c. Seed that has been broadcast should be covered by raking or dragging and then lightly tamped into place using a roller or cultipacker. If hydroseeding is used and the seed and fertilizer is mixed, they will be mixed on site and the seeding shall be done immediately and without interruption.

5. Mulching

All mulching shall be done in accordance with detail **DE-ESC-3.4.5**.

Source:	Symbol:	Detail No.
Delaware ESC Handbook		**DE-ESC-3.4.3** Sheet 4 of 4 Effective FEB 2019

This drawing is the property of Century Engineering, Inc. and is prepared for the exclusive use of its clients at the location indicated. No other use is authorized or intended.

CENTURY ENGINEERING, INC.
ADDRESS: 550 BAY ROAD DOVER, DE 19901
P: (302) 734-9188 F: (302) 734-4589
WEBSITE: www.centuryeng.com
EMAIL: ce@centuryeng.com

REVISIONS

ADDENDUM

DESCRIPTION	DATE

PROJECT
CONSTRUCTION PLANS FOR DELAWARE DIVISION OF FISH & WILDLIFE
GARRISON'S LAKE BOAT RAMP RECONSTRUCTION
LITTLE CREEK HUNDRED, KENT COUNTY, DELAWARE

SHEET TITLE
EROSION & SEDIMENT CONTROL DETAILS

DIV. OF FISH AND WILDLIFE BID SET
OCTOBER, 2020

DRAWN	CHK'D/DESIGNER
ECM	AES

SCALE: AS NOTED
SHEET NO.: C109
PROJECT NO.: 175013.43

Q:\Projects\175\13.00 DNREC 2017 Engineering DE\175013.43 (Garrisons Lake Boat Ramp)\CADD FILES\Sheets\Construction Plans\C109_EROSIONdetails.dwg, 11/10/2020 3:53 PM

Standard Detail & Specifications
Turbidity Curtain

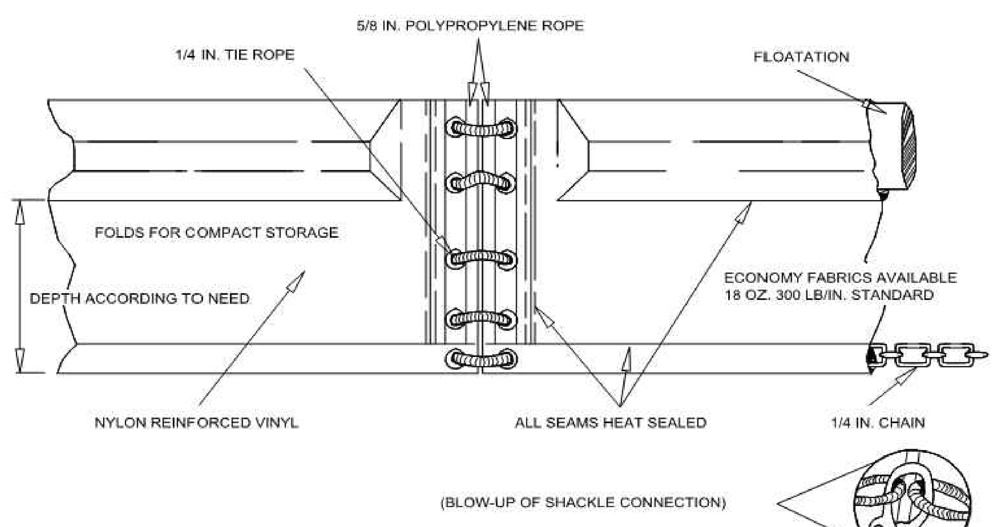

Typical Section - Type 1

DATA
Curtain type (1,2, or 3)
Layout (Std. or Alt.)

Source:	Symbol:	Detail No.
Adapt. from Amer. Boom and Barrier Corp.	TC-(1/2/3) (Std/Alt)	DE-ESC-3.5.3 Sheet 1 of 8 Effective FEB 2019

Standard Detail & Specifications
Turbidity Curtain

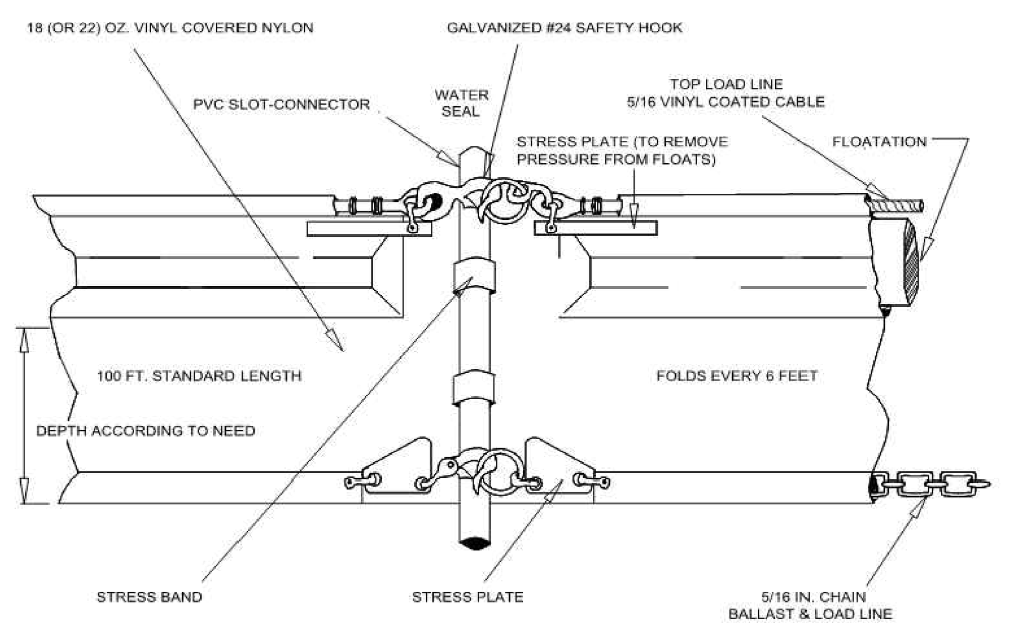

Typical Section - Type 2

DATA
Curtain type (1, 2, or 3)
Layout (Std. or Alt.)

Source:	Symbol:	Detail No.
Adapt. from Amer. Boom and Barrier Corp.	TC-(1/2/3) (Std/Alt)	DE-ESC-3.5.3 Sheet 2 of 8 Effective FEB 2019

Standard Detail & Specifications
Turbidity Curtain

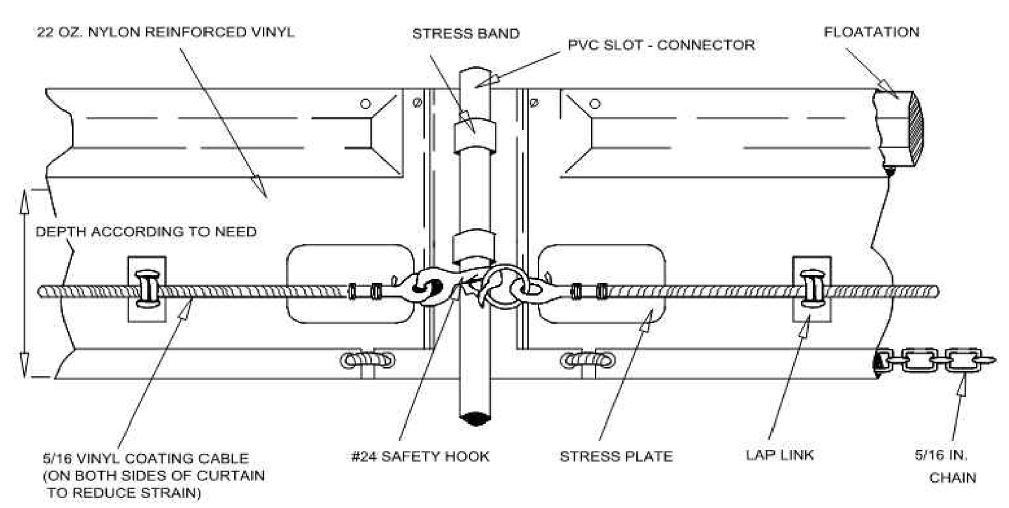

Typical Section - Type 3

DATA
Curtain type (1, 2, or 3)
Layout (Std. or Alt.)

Source:	Symbol:	Detail No.
Adapt. from Amer. Boom and Barrier Corp.	TC-(1/2/3) (Std/Alt)	DE-ESC-3.5.3 Sheet 3 of 8 Effective FEB 2019

Standard Detail & Specifications
Turbidity Curtain

NOTE: The standard layout shown is intended for use in streams, ponds and other non-tidal waters

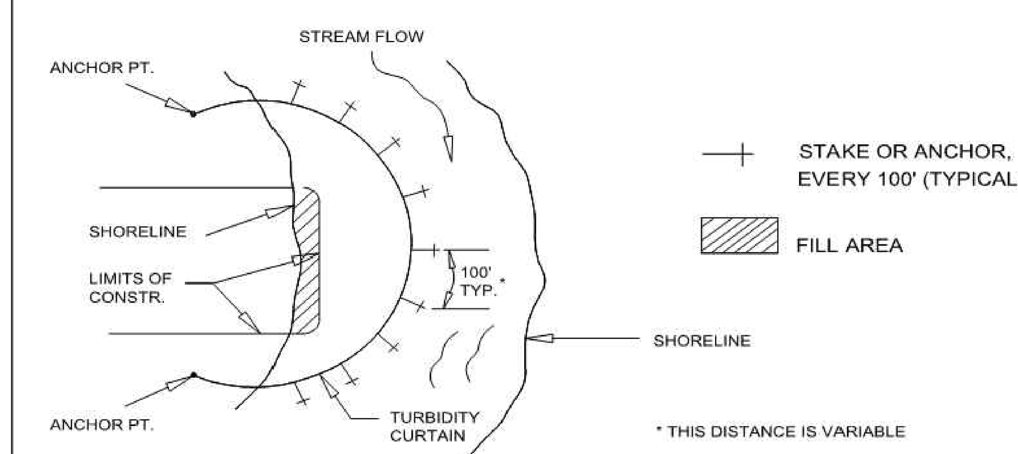

Plan - Std. Layout

Source:	Symbol:	Detail No.
Adapt. from Amer. Boom and Barrier Corp.	TC-(1/2/3) (Std/Alt)	DE-ESC-3.5.3 Sheet 4 of 8 Effective FEB 2019

Standard Detail & Specifications
Turbidity Curtain

NOTE: The alternative layout shown is intended for tidal waters and/or heavy wind and wave action

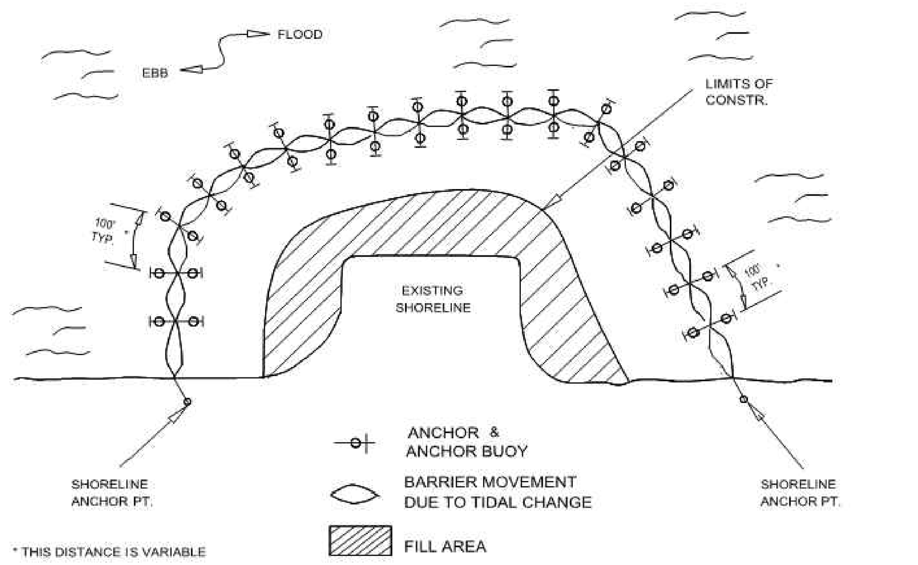

Plan - Alt. Layout

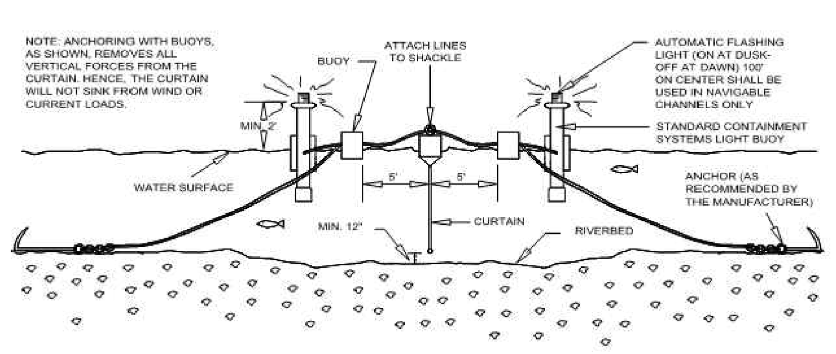

Additional Requirements for Navigable Waters

Source:	Symbol:	Detail No.
Adapt. from Amer. Boom and Barrier Corp.	TC-(1/2/3) (Std/Alt)	DE-ESC-3.5.3 Sheet 5 of 8 Effective FEB 2019

Standard Detail & Specifications
Turbidity Curtain

Construction Notes:

1. **Materials**
   a. Barriers should be a bright color (yellow or "international" orange are recommended) that will attract the attention of nearby boaters.
   b. The curtain fabric shall meet manufacturer's recommendations for the application.
   c. Seams in the fabric shall be either vulcanized welded or sewn and shall develop the full strength of the fabric.
   d. Floatation devices shall be flexible, buoyant units contained in an individual floatation sleeve or collar attached to the curtain. Buoyancy provided by the floatation units shall be sufficient to support the weight of the curtain and maintain a freeboard of at least 3 inches above the water surface level.
   e. Load lines must be fabricated into the bottom of all floating turbidity curtains. Type II and Type III must have load lines also fabricated into the top of the fabric. The top load line shall consist of woven webbing or vinyl-sheathed steel cable and shall have a break strength in excess of 10,000 pounds. The supplemental (bottom) load line shall consist of a chain incorporated into the bottom hem of the curtain of sufficient weight to serve as ballast to hold the curtain in a vertical position. Additional anchorage shall be provided as necessary. The load lines shall have suitable connecting devices which develop the full breaking strength for connection to load lines in adjacent sections as shown in the detail.
   f. External anchors may consist of wooden or metal stakes (2- x 4-inch or 2-1/2-inch minimum diameter wood or 1.33 lbs/linear foot steel) when Type I installation is used; when Type II or Type III installations are used, bottom anchors should be used.
   g. Bottom anchors must be sufficient to hold the curtain in the same position relative to the bottom of the watercourse without interfering withthe action of the curtain. The anchor may dig into the bottom (grappling hook, plow or fluke-type) or may be weighted (mushroom type) and should be attached to a floating anchor buoy via an anchor line. The anchor line should then run from the buoy to the to load line of the curtain. When used with Type III installations, these lines must contain enough slack to allow the buoy and curtain to float freely with tidal changes without pulling the buoy or curtain down and must be checked regularly to make sure they do not become entangled with debris. As previously noted, anchor spacing will vary with current velocity and potential wind and wave action; manufacturer's recommendations should be followed. See detail for orientation of external anchors and anchor buoys for tidal installations.

Source:	Symbol:	Detail No.
Adapt. from Amer. Boom and Barrier Corp.	TC-(1/2/3) (Std/Alt)	DE-ESC-3.5.3 Sheet 6 of 8 Effective FEB 2019

Standard Detail & Specifications
Turbidity Curtain

Construction Notes (cont.)

2. **Installation**
   a. In the calm water of lakes or ponds (Type I installation) it is usually sufficient to set the curtain end stakes or anchor points (using anchor buoys if bottom anchors are employed), then tow the curtain in the furled condition out and attach it to the stakes or anchor points. Following this, any additional stakes or buoyed anchors required to maintain the desired location of the curtain may be set and these anchor points made fast to the curtain. Only then shall the furling lines be cut to allow the curtain skirt to drop.
   b. In rivers or in other moving waters (Type II and Type III installations) it is important to set all curtain anchor points. Care must be taken to ensure that anchor points are of sufficient holding power to retain the curtain under the existing current conditions, prior to putting the furled curtain into the water. Anchor buoys should be employed on all anchors to prevent the current from submerging the flotation at the anchor points. If the curtain is being installed into tidal areas which would be subject to currents in both directions, anchors should be provided on both sides of the curtain. This will minimize curtain movement and prevent the curtain from overrunning the anchors during tide reversals. After the anchors have been secured, the furled curtain should be secured to the upstream anchor point and then sequentially attached to each next downstream anchor point until the entire curtain is in position. Before unfurling, the "lay" of the curtain should be assessed and any necessary adjustments made to the anchors. Once the location has been deemed adequate, the furling lines may be cut to allow the skirt to drop.
   c. Anchor lines should be attached to the flotation device, not to the bottom of the curtain. The anchoring line attached to the flotation device on the downstream side will provide support for the curtain. Attaching the anchors to the bottom of the curtain could cause premature failure of the curtain due to the stresses imparted on the middle section of the curtain.
   d. Turbidity curtain shall not be installed across channel flows unless there is a danger of causing sediment deposition to occur in the middle of a watercourse, thereby blocking access or creating a sand bar. In such situations, the curtain may be installed so as to form a long-sided, sharp "V" to deflect clean water around a work site, confining most of the silt-laden water to the work area inside the "V" and directing it to the shoreline. In no case shall the curtain be installed perpendicular to the channel flow.

Source:	Symbol:	Detail No.
Adapt. from Amer. Boom and Barrier Corp.	TC-(1/2/3) (Std/Alt)	DE-ESC-3.5.3 Sheet 7 of 8 Effective FEB 2019

Standard Detail & Specifications
Turbidity Curtain

Construction Notes (cont.)

3. **Maintenance**
   a. The individual(s) identified on the plan as responsible for maintenance of the curtain shall do so for the duration of the project in order to ensure the continuous protection of the watercourse.
   b. Should repairs to the geotextile fabric become necessary, repair kits are generally available from the manufacturer. The manufacturer's instructions must be followed to ensure the adequacy of the repair.
   c. When the curtain is no longer required as determined by the inspector, the curtain and related components shall be removed in such a manner as to minimize turbidity. Remaining sediment shall be sufficiently settled before removing the curtain. Sediment may be removed and the original depth (or plan elevation) restored. Any spoils must be taken to an approved upland disposal area and stabilized in accordance with the approved plan.

4. **Removal**
   a. Care shall be taken to protect the skirt from damage as the turbidity curtain is dragged from the watercourse.
   b. The site selected to bring the curtain ashore should be free of sharp rocks, broken cement, debris, etc. so as to minimize damage when hauling the curtain over the area.
   c. If the curtain has a deep skirt, it can be further protected by running a small boat along its length with a crew installing furling lines before attempting to remove the curtain from the water.

Source:	Symbol:	Detail No.
Adapt. from Amer. Boom and Barrier Corp.	TC-(1/2/3) (Std/Alt)	DE-ESC-3.5.3 Sheet 8 of 8 Effective FEB 2019

This drawing is the property of Century Engineering, Inc. and is prepared for the exclusive use of its clients at the location indicated. No other use is authorized or intended.

CENTURY ENGINEERING, INC.
ADDRESS: 550 BAY ROAD DOVER, DE 19901
P: (302) 734-9188 F: (302) 734-4589
WEBSITE: www.centuryeng.com
EMAIL: cei@centuryeng.com

REVISIONS

ADDENDUM

DESCRIPTION DATE

PROJECT

CONSTRUCTION PLANS FOR DELAWARE DIVISION OF FISH & WILDLIFE
GARRISON'S LAKE BOAT RAMP RECONSTRUCTION
LITTLE CREEK HUNDRED, KENT COUNTY, DELAWARE

SHEET TITLE

EROSION & SEDIMENT CONTROL DETAILS

DIV. OF FISH AND WILDLIFE
BID SET
OCTOBER, 2020

DRAWN	CHK'D/DESIGNER
ECM	AES
SCALE	SHEET NO.
AS NOTED	C110
PROJECT NO.	
175013.43	