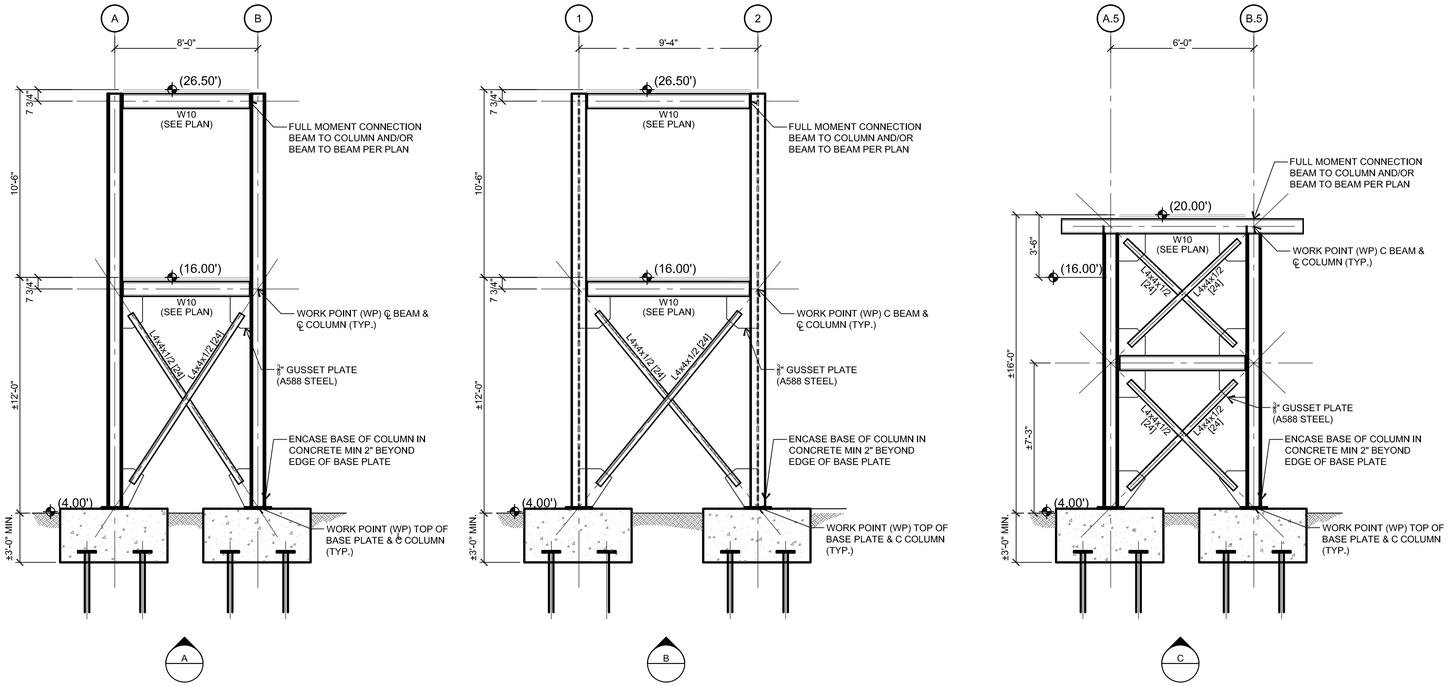

9 Observation Tower Bracing Elevations

1/4"=1'-0"

NOTES:
1. COORDINATE ALL DIMENSIONS WITH PLANS
2. SEE PLAN FOR ALL BEAM AND COLUMN SIZES.
3. [...] INDICATES TENSION AND/OR COMPRESSION BRACE FORCE IN KIPS. ⅓ STRESS INCREASE IS NOT PERMITTED.
4. ALL BOLTS TO BE SLIP CRITICAL BOLTS UNLESS NOTED OTHERWISE.
5. SEE PLAN FOR COLUMN ORIENTATION
6. ALL STEEL TO BE ASTM A588 WEATHERING STEEL.
7. ALL BOLTS TO BE GALVANIZED TENSION CONTROLLED BOLTS.
8. GRADE TO SLOPE AWAY FROM TOP OF FOUNDATIONS MAX 3:1 SLOPE.

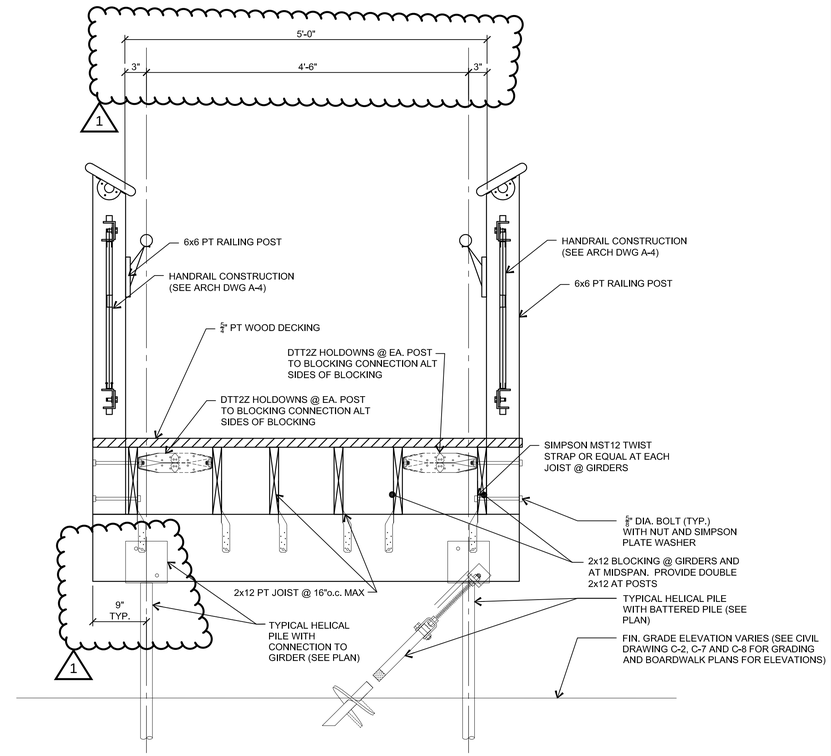

17 Typical Boardwalk Framing Section

1"=1'-0"

NOTES:
1. COORDINATE ALL RAILING FINISHES, PROFILES, ETC WITH ARCHITECTURAL DRAWINGS (DRAWING A-4)

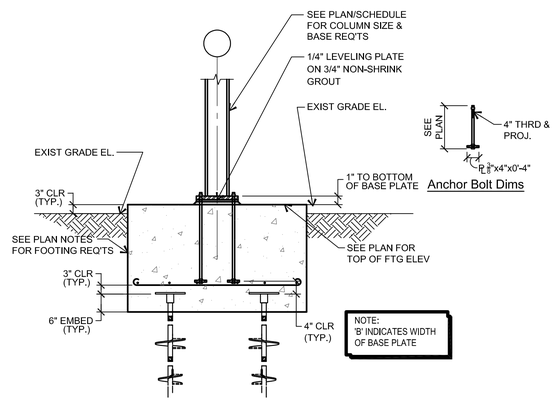

26 Typical Column & Pile Cap Foundation Detail

1/2"=1'-0"

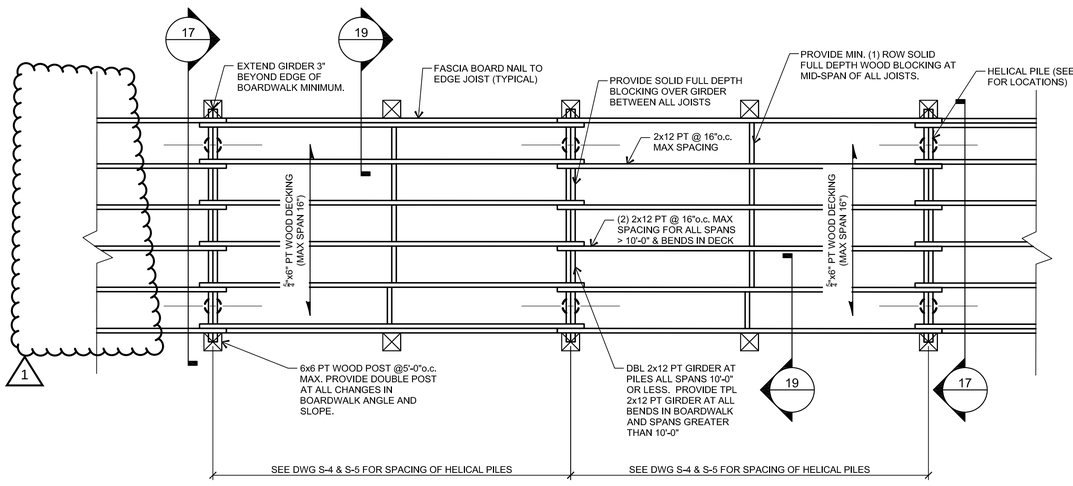

11 Typical Boardwalk Framing Segment

1/2"=1'-0"

NOTES:
1. FOR BENDS IN BOARDWALK AND JOIST SPANS > 10'-0" PROVIDE (3) 2x12 GIRDER @ BEND AND ADJACENT GIRDER
2. PROVIDE DOUBLE JOISTS AT ALL BENDS IN BOARDWALK AND SPANS > 10'-0:

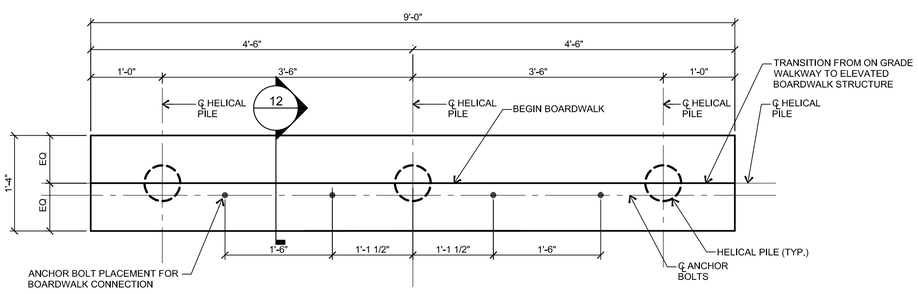

10 Enlarged End Abutment at Approach Boardwalk

1"=1'-0"

DATE:	DESCRIPTION:	BY:
7.14.2017	50% SUBMITTAL	PJP
11.2.2017	ISSUED FOR PERMIT	
12.1.2017	ISSUED FOR BID	
3.9.2018	ADDENDUM #1	

DELAWARE'S BAYSHORE BYWAY
LITTLE CREEK BOARDWALK AND WILDLIFE OBSERVATION TOWER

OBSERVATION TOWER SECTIONS

DELAWARE DEPARTMENT OF NATURAL RESOURCES AND ENVIRONMENTAL CONTROL

DESIGNED BY: P2STRENG
DRAWN BY: P2STRENG
BUILDING NO.: N/A
DATE: DECEMBER 1, 2017
SCALE:
SHEET NO.: S-7
DFW PROJECT #: FW-2-15
CONTRACT #: FW-2-15

1/20/2017 8:11:33 AM
C:\Users\p2streng\AppData\Local\Temp\Temp1_SampleDrawings.zip\border_cc.dwg