STATE OF DELAWARE
DEPARTMENT OF NATURAL RESOURCES AND ENVIRONMENTAL CONTROL
DIVISION OF FISH & WILDLIFE

Delaware Bayshore Byway

LITTLE CREEK BOARDWALK AND WILDLIFE OBSERVATION TOWER

CONTRACT NO. FW-2-15

FINAL PLANS

JULY 16, 2018

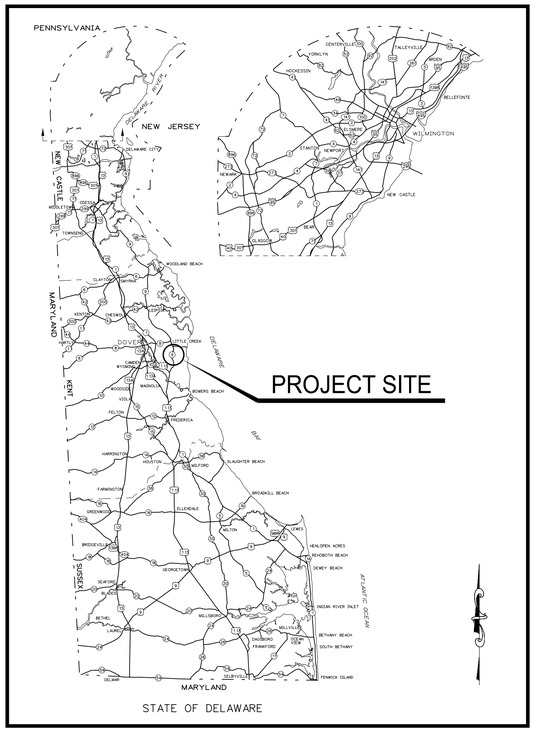

LOCATION MAP

PROJECT SITE

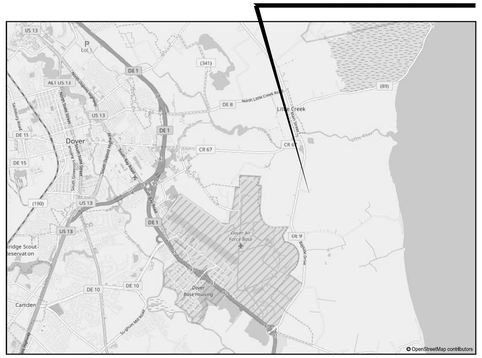

SITE MAP

INDEX OF SHEETS

SHEET NO.:	TITLE
C-1	GENERAL NOTES & CLEARING DETAIL
C-2	CONSTRUCTION PLAN BASE BID
C-3	PARKING LOT ADD/ALTERNATE NO. 1 & 2
C-4	CONSTRUCTION DETAILS
C-5	STANDARD FISH AND WILDLIFE TACKBOARD LARGE (3'X6' CABINET) VERSION
C-6	DEMOLITION PLAN
C-7	BOARDWALK PROFILE
A-1	OBSERVATION TOWER PLAN
A-2	OBSERVATION TOWER ELEVATIONS
A-3	STAIR PLAN & SECTIONS
A-4	RAILING ELEVATIONS & DETAILS
S-1	STRUCTURAL COVER SHEET
S-2	STRUCTURAL GENERAL NOTES
S-3	STRUCTURAL SCHEDULES
S-4	BOARDWALK FOUNDATION PLAN SHEET1
S-5	BOARDWALK FOUNDATION PLAN SHEET2
S-6	OBSERVATION TOWER PLANS
S-7	OBSERVATION TOWER SECTIONS
S-8	OBSERVATION TOWER SECTIONS AND DETAILS
ES-1	EROSION AND SEDIMENT CONTROL PLAN
ES-2 TO ES-3	EROSION AND SEDIMENT CONTROL DETAILS

LEGEND

- CONSTRUCTION PLAN
- EROSION AND SEDIMENT CONTROL PLAN

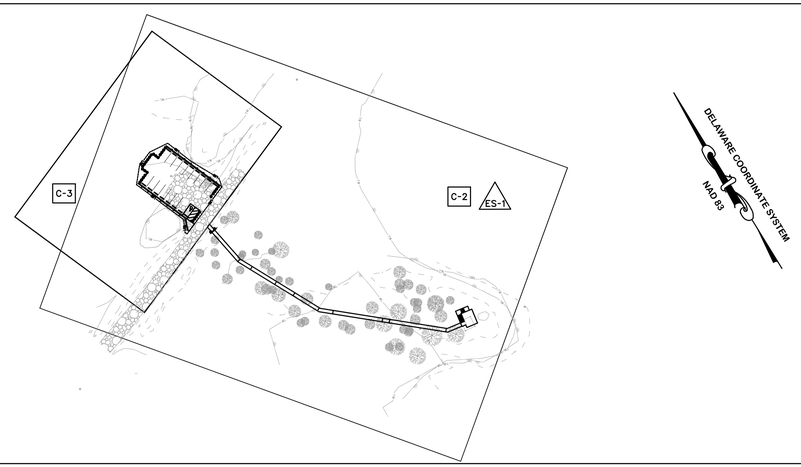

SHEET INDEX

SCALE: 1"=100'

OWNER INFORMATION

OWNER: STATE OF DELAWARE
89 KINGS HIGHWAY
DOVER, DELAWARE 19901

PROPERTY ADDRESS: 3002 BAYSIDE DRIVE
DOVER, DELAWARE 19901

TAX PARCEL #: 2-00-07900-01-0300-0001

DESIGNER/APPLICANT: RK&K
700 E. PRATT STREET, SUITE 500
BALTIMORE, MARYLAND 21202

PREPARED BY
THE CONSULTING FIRM OF

RK&K
RUMMEL, KLEPPER & KAHL, LLP
CONSULTING ENGINEERS
700 E. PRATT STREET, SUITE 500
BALTIMORE, MD 21202

Nancy R. Bergeron
DIRECTOR

7/16/2018
DATE

NANCY RUTH BERGERON
LICENSE
No. 18737
DELAWARE
PROFESSIONAL ENGINEER

PREPARED FOR:
DELAWARE DIVISION OF FISH & WILDLIFE
89 KINGS HIGHWAY
DOVER, DELAWARE 19901
PHONE: 302-739-9231
FAX: (302) 739-7026

DATE: JULY 16, 2018

GENERAL NOTES

1. BEFORE EXCAVATION IS STARTED IN AREAS OF UNDERGROUND UTILITIES, THE CONTRACTOR SHALL GIVE NOTIFICATION BY TELEPHONE, CALLING "MISS UTILITY", TEL. (800) 282-8555. THE CONTRACTOR IS ADVISED THAT MISS UTILITY HAS REFUSED TO LOCATE UTILITIES ON STATE PROPERTY IN SOME INSTANCES. THE CONTRACTOR SHALL VERIFY EXACT LOCATIONS OF ALL UTILITIES IN THE FIELD BY EMPLOYING A PROFESSIONAL UTILITY LOCATOR TO FIELD LOCATE EXISTING UTILITIES PRIOR TO ANY EXCAVATION. EXISTING UTILITIES ARE SHOWN ON THE DRAWINGS BASED ON THE BEST INFORMATION AVAILABLE, HOWEVER THIS INFORMATION HAS NOT BEEN FIELD VERIFIED AND IS NOT GUARANTEED. ALL EXISTING UTILITIES SHALL BE PROTECTED AND TEMPORARILY SUPPORTED OR RELOCATED AS NECESSARY TO COMPLETE THE WORK IN ACCORDANCE WITH THE PERTINENT UTILITY COMPANY REQUIREMENTS. ALL COSTS SHALL BE INCIDENTAL TO THE CONTRACT.
2. THE CONTRACTOR SHALL DESIGNATE A PERSON WHO SHALL BE RESPONSIBLE FOR IMPLEMENTING AND MAINTAINING THE EROSION AND SEDIMENT CONTROL PLANS, AND A PERSON WHO SHALL BE RESPONSIBLE FOR WORK SAFETY.
3. THE CONTRACTOR IS RESPONSIBLE FOR SECURING THE AREA WITHIN THE LIMITS OF DISTURBANCE TO PROHIBIT PUBLIC ACCESS UNTIL COMPLETION OF THE PROJECT. THE CONTRACTOR'S PROCEDURE/METHOD FOR LIMITING ACCESS SHALL BE SUBMITTED TO THE OWNER FOR REVIEW AND APPROVAL PRIOR TO THE START OF WORK. THE COST SHALL BE INCLUDED IN THE CONTRACT.
4. THE LIMIT OF DISTURBANCE SHALL BE AS SHOWN ON THE PLANS. THE CONTRACTOR SHALL NOT WORK OR TRESPASS OUTSIDE OF THE LIMIT OF DISTURBANCE AS SHOWN ON THE PLANS UNLESS OTHERWISE APPROVED BY THE OWNER.
5. APPROVED COVERS TO PREVENT MATERIAL FROM LEAVING THE TRUCKS MUST BE INSTALLED OVER ALL LOADED TRUCKS HAULING BORROW, EXCAVATED MATERIALS, AND/OR FINE AGGREGATES TO OR FROM THE PROJECT SITE OVER STATE MAINTAINED ROADS. THE TRUCKS SHALL BE FULLY COVERED AND THE COVERS SHALL BE TIED ON THE REAR AND BOTH SIDES TO PREVENT MATERIAL FROM LEAVING THE TRUCK DURING HAULING.
6. IN CASE OF CONFLICT BETWEEN THE "MANUFACTURER'S RECOMMENDATIONS" FOR AN APPROVED MATERIAL AND THE GOVERNING "CONTRACT SPECIFICATIONS" FOR THE MATERIAL, THE MORE RESTRICTIVE OF THE TWO SHALL PREVAIL UNLESS OTHERWISE DIRECTED BY THE OWNER.
7. THE CONTRACTOR SHALL BE RESPONSIBLE FOR ESTABLISHING, BY SURVEY, ALL POINTS AND LIMIT OF DISTURBANCE LINES NECESSARY FOR CONSTRUCTION OF THE PROJECT. THE CONTRACTOR SHALL ENGAGE A PROFESSIONAL LAND SURVEYOR, REGISTERED IN THE STATE OF DELAWARE, TO PERFORM REQUIRED SURVEYING SERVICES. ALL SURVEY STAKEOUT WORK SHALL BE INCLUDED IN THE CONTRACT.
8. THE CONTRACTOR SHALL SUBMIT A STAGING PLAN TO THE OWNER FOR APPROVAL PRIOR TO CONSTRUCTION OF THE PROJECT. THE STAGING PLAN SHALL INCLUDE SITE LOCATION, EROSION AND SEDIMENT CONTROLS, AND ALL OTHER INCIDENTALS, AS DIRECTED BY THE OWNER. ALL COSTS ASSOCIATED WITH PREPARING AND IMPLEMENTING THE STAGING PLAN SHALL BE THE RESPONSIBILITY OF THE CONTRACTOR.
9. ALL CONSTRUCTION ACCESS SHALL USE THE STABILIZED CONSTRUCTION ENTRANCE. CONSTRUCTION, MAINTENANCE, CLEANING, RE-COMPACTING, REMOVAL AND REPLACEMENT OF THE BASE COURSE MATERIALS FOR THE STABILIZED CONSTRUCTION ENTRANCE SHALL BE IN ACCORDANCE WITH THE APPROVED EROSION AND SEDIMENT CONTROL PLAN AS DIRECTED BY THE CERTIFIED CONSTRUCTION REVIEWER AND THE OWNER. THE CONTRACTOR IS RESPONSIBLE FOR CLEANING THE ROAD AT THE CONSTRUCTION ENTRANCE AT THE END OF EACH WORKING DAY.
10. THE CONTRACTOR MAY STORE OR STOCKPILE EQUIPMENT OR MATERIALS ON THE PROJECT SITE IN THE CONSTRUCTION STAGING AREA SHOWN ON THE PLAN. PROPER EROSION AND SEDIMENT CONTROL MEASURES, AS DETERMINED BY THE OWNER, SHALL BE INSTALLED IN ALL STAGING AREAS. SILT FENCE SHALL BE PLACED AROUND THE STOCKPILE AREAS AS DIRECTED BY THE OWNER. THE COST OF EROSION AND SEDIMENT CONTROL MEASURES SHALL BE INCIDENTAL TO THE CONTRACT.
11. UPON COMPLETION OF THE PROJECT, THE CONTRACTOR SHALL FULLY RESTORE ALL AREAS USED FOR STAGING OPERATIONS, INCLUDING SOIL STOCKPILE AREAS, TO ITS ORIGINAL CONDITION TO THE SATISFACTION OF THE OWNER. ALL COSTS ASSOCIATED WITH RESTORATION OF THE STAGING AREA SHALL BE AT THE CONTRACTOR'S EXPENSE.
12. THE CONTRACTOR SHALL PROVIDE NECESSARY RESTROOM FACILITIES FOR WORKERS DURING CONSTRUCTION.
13. THE DATUM USED ON THIS PROJECT IS HORIZONTAL NAD 83/91 AND VERTICAL NGVD 88.
14. THE MAXIMUM SLOPE OF THE TRAIL IN THE DIRECTION OF TRAVEL SHALL NOT EXCEED 5% AT ANY LOCATION.
15. ALL CONSTRUCTION IS TO BE IN ACCORDANCE WITH THE DELDOT STANDARDS SPECIFICATIONS FOR ROAD AND BRIDGE CONSTRUCTION DATED 2011 AND SUPPLEMENTAL SPECIFICATIONS, AND STANDARD CONSTRUCTION DETAILS, UNLESS OTHERWISE NOTED ON THE PLANS OR IN THE SPECIFICATIONS FOR THIS PROJECT AND AS FOLLOWS. FOR THIS PROJECT, DIVISION 100 GENERAL PROVISIONS IN THE DELDOT STANDARD SPECIFICATIONS DOES NOT APPLY. THERE WILL BE NO MEASUREMENT FOR PAYMENT EXCEPT WHERE SPECIFICALLY STATED IN THE PLANS AND SPECIFICATIONS FOR THIS PROJECT.
16. ALL WORK IN WETLANDS SHALL BE PERFORMED IN ACCORDANCE WITH NATIONWIDE PERMIT 33 CONDITIONS AND AS FOLLOWS. IMPACTS FROM VEHICLES TRANSVERSING WETLANDS SHALL BE REDUCED BY USING SUPPORT MATS, LOW IMPACT EQUIPMENT AND BY MINIMIZING VEHICULAR TRAFFIC. ALL VEHICLES OR EQUIPMENT TRANSVERSING, OR OPERATED IN, WETLANDS SHALL BE ADEQUATELY SUPPORTED BY MATS AT ALL TIMES.
17. FAA NOTIFICATION HAS BEEN COMPLETED AND A DETERMINATION OF NO HAZARD TO AIR NAVIGATION HAS BEEN ISSUED FOR THE PERMANENT LITTLE CREEK BOARDWALK AND OBSERVATION TOWER. THE CONTRACTOR IS RESPONSIBLE FOR FAA NOTIFICATION REQUIRED FOR TEMPORARY STRUCTURES (CRANES) USED DURING CONSTRUCTION, AS THE PROJECT IS WITHIN CLOSE PROXIMITY TO DOVER AIR FORCE BASE AND PER C.F.R. TITLE 14 CHAPTER ISUBCHAPTER E PART 77. FAA NOTIFICATION SHOULD BE SUBMITTED A MINIMUM OF 45 DAYS PRIOR TO CONSTRUCTION. AN ONLINE TOOL TO DETERMINE IF NOTIFICATION IS REQUIRED, AN ONLINE NOTIFICATION FORM, AND OTHER INFORMATION CAN BE FOUND AT HTTPS://OEAAA.FAA.GOV.
18. THE BUILDING PERMIT SHALL BE SECURED BY THE CONTRACTOR. COST OF THE PERMIT SHALL BE REIMBURSED BY THE OWNER.

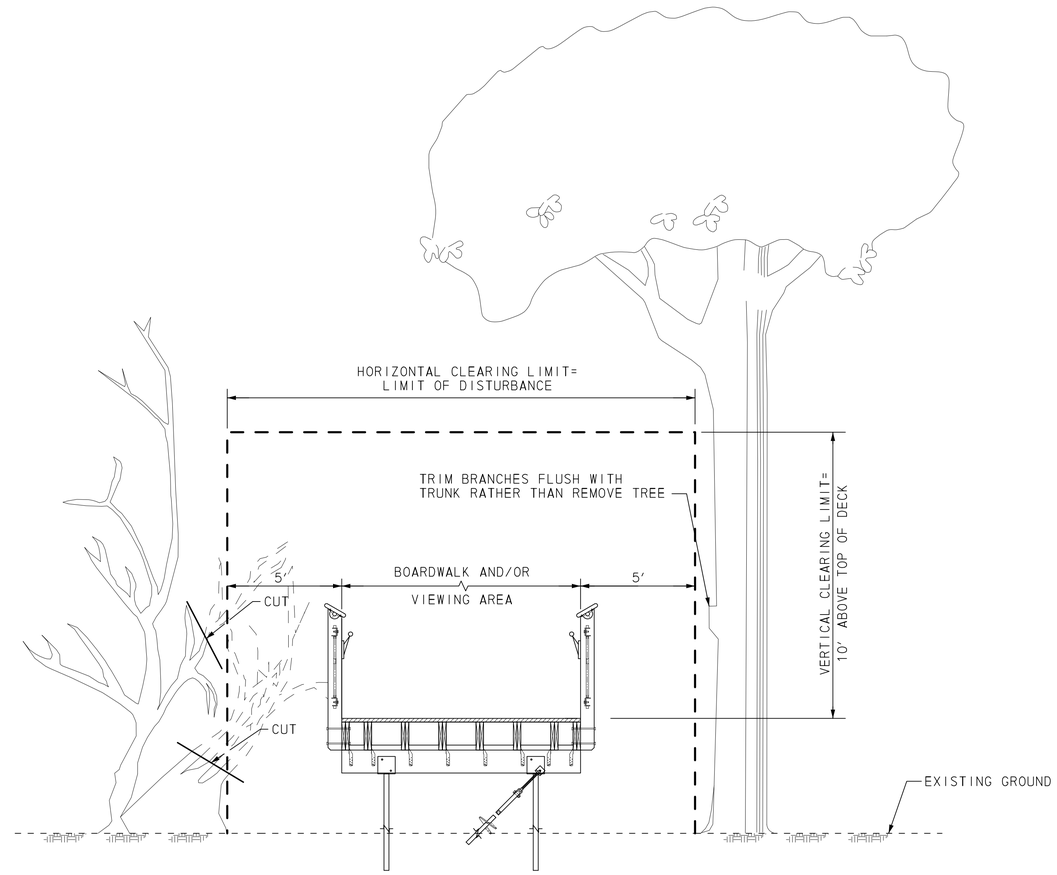

BOARDWALK & OBSERVATION TOWER CLEARING LIMITS

CLEARING AND PRUNING NOTES:

1. IN AREAS WHERE TREES AND/OR SHRUBS WILL BE OVERHANGING OR ENCROACHING ON THE BOARDWALK AND OBSERVATION TOWER, PRUNING MAY BE NECESSARY TO ACHIEVE A VERTICAL AND/OR HORIZONTAL CLEAR SPACE AS SHOWN ON THE DETAIL ON THIS SHEET. THE CONTRACTOR SHALL PRUNE EXISTING TREE AND SHRUB BRANCHES IN ACCORDANCE WITH THE INTERNATIONAL SOCIETY OF ARBORCULTURE (I.S.A.) STANDARDS. THE INTENT OF THIS WORK IS TO NOT REMOVE LARGE TREES. THE OWNER WILL IDENTIFY AND CLEARLY MARK ALL TREES TO BE REMOVED.
2. CLEARING OPERATIONS SHALL NOT INCLUDE GRUBBING. CLEARED VEGETATION SHALL BE CUT FLUSH WITH THE GROUND AND THERE SHALL BE NO DISTURBANCE OF THE ROOT MAT.
3. ALL MATERIAL RESULTING FROM PRUNING AND REMOVAL OF TREES, SHRUBS, AND OTHER VEGETATION SHALL BE DISPOSED OF OFFSITE BY THE CONTRACTOR.
4. ALL TREE REMOVAL AND PRUNING NECESSARY FOR CONSTRUCTION, AS DIRECTED BY THE OWNER, SHALL BE CONSIDERED INCIDENTAL TO THE CONTRACT AND SHALL BE DONE AT NO ADDITIONAL COST TO THE OWNER.
5. THE LIMITS OF CLEARING AND DISTURBANCE SHOWN ARE NOT INTENDED TO RESTRICT OR OBSTRUCT PROPER PRUNING PROCEDURES IN ACCORDANCE WITH THE STANDARDS REFERENCED IN NOTE 1.
6. WITHIN THE LIMIT OF THE BOARDWALK AND OBSERVATION TOWER, THE CONTRACTOR SHALL REMOVE LARGE SHRUBS AND YOUNG TREES WITHIN THE CLEARING LIMITS TO ELIMINATE POTENTIAL FIRE HAZARD.

DATE:	DESCRIPTION:	BY:
7/16/18	ISSUED FOR BID	

DELAWARE BAYSHORE BYWAY
LITTLE CREEK BOARDWALK AND WILDLIFE OBSERVATION TOWER
GENERAL NOTES & CLEARING DETAIL

DELAWARE DEPARTMENT OF NATURAL RESOURCES AND ENVIRONMENTAL CONTROL

DESIGNED BY: RKK
DRAWN BY: RKK
BUILDING NO.: N/A
DATE: JULY 16, 2018
SCALE: NOT TO SCALE
SHEET NO.: C-1
DFW PROJECT #: FW-2-15
CONTRACT #: FW-2-15

7/16/2018 12:18:09 PM
\\balsrv05\v2015\2015\15010_dnrecFW\Little Creek Observation Tower\Cadd\Contract\Plans\gn01_lct.dgn

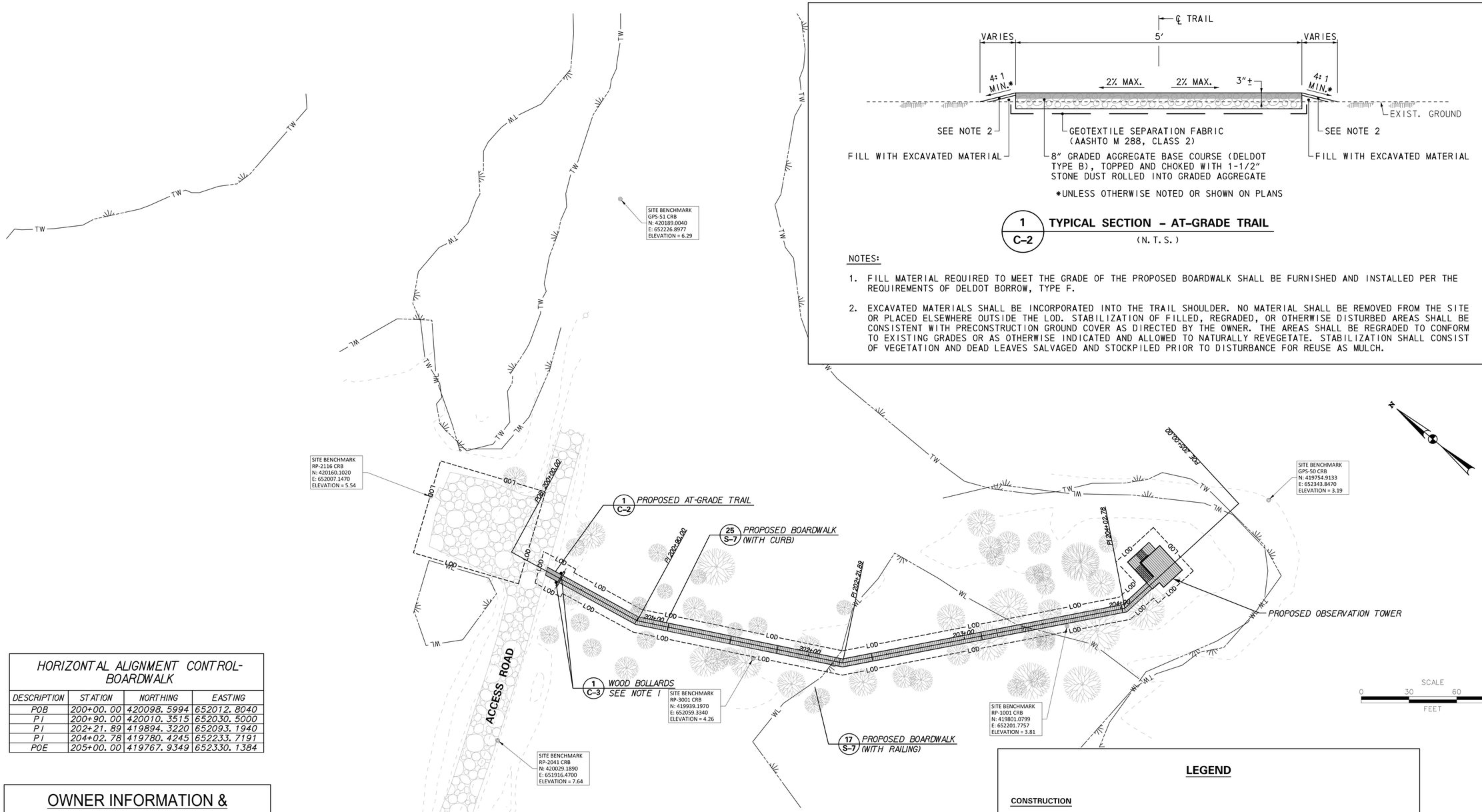

1 / C-2 **TYPICAL SECTION – AT-GRADE TRAIL**

(N.T.S.)

NOTES:

1. FILL MATERIAL REQUIRED TO MEET THE GRADE OF THE PROPOSED BOARDWALK SHALL BE FURNISHED AND INSTALLED PER THE REQUIREMENTS OF DELDOT BORROW, TYPE F.
2. EXCAVATED MATERIALS SHALL BE INCORPORATED INTO THE TRAIL SHOULDER. NO MATERIAL SHALL BE REMOVED FROM THE SITE OR PLACED ELSEWHERE OUTSIDE THE LOD. STABILIZATION OF FILLED, REGRADED, OR OTHERWISE DISTURBED AREAS SHALL BE CONSISTENT WITH PRECONSTRUCTION GROUND COVER AS DIRECTED BY THE OWNER. THE AREAS SHALL BE REGRADED TO CONFORM TO EXISTING GRADES OR AS OTHERWISE INDICATED AND ALLOWED TO NATURALLY REVEGETATE. STABILIZATION SHALL CONSIST OF VEGETATION AND DEAD LEAVES SALVAGED AND STOCKPILED PRIOR TO DISTURBANCE FOR REUSE AS MULCH.

HORIZONTAL ALIGNMENT CONTROL-BOARDWALK

DESCRIPTION	STATION	NORTHING	EASTING
POB	200+00.00	420098.5994	652012.8040
PI	200+90.00	420010.3515	652030.5000
PI	202+21.89	419894.3220	652093.1940
PI	204+02.78	419780.4245	652233.7191
POE	205+00.00	419767.9349	652330.1384

OWNER INFORMATION & MISCELLANEOUS NOTES

OWNER: STATE OF DELAWARE
89 KINGS HIGHWAY
DOVER, DELAWARE 19901

PROPERTY ADDRESS: 3002 BAYSIDE DRIVE
DOVER, DELAWARE 19901

TAX PARCEL #: 2-00-07900-01-0300-0001

DESIGNER/APPLICANT: RK&K
700 E. PRATT STREET, SUITE 500
BALTIMORE, MARYLAND 21202

1. THERE ARE NO WATER MAINS OR FIRE HYDRANTS ON OR ADJACENT TO THE PROPERTY.
2. THE MAXIMUM HEIGHT OF THE STRUCTURE IS 42 INCHES ABOVE THE DECK.
3. THE PROPOSED BUILDING CONSTRUCTION IS TYPE 5.

NOTES:

1. *BOLLARDS PER DETAIL 1 ON SHEET C-3. THE INTENT OF THE BOLLARDS IS TO KEEP MOTORIZED VEHICLES AND MAINTENANCE EQUIPMENT OFF THE BOARDWALK AND OBSERVATION TOWER.*
2. *THE ENTIRE PROJECT AREA IS WITHIN THE FEMA 100-YEAR FLOODPLAIN.*
3. *SEE SHEETS A-1 THROUGH A-4 AND S-1 THROUGH S-8 FOR BOARDWALK AND OBSERVATION TOWER DRAWINGS AND DETAILS.*
4. *SEE SHEET C-7 FOR LIMITS OF CURB AND RAILING ALONG BOARDWALK.*

LEGEND

CONSTRUCTION

- *8" GRADED AGGREGATE BASE COURSE CHOKED WITH 1½" STONE DUST*
- *PROPOSED BOARDWALK & OBSERVATION TOWER*
- —LOD— *LIMIT OF DISTURBANCE*
- • *BOLLARD*

EXISTING SYMBOLS

- WL RK&K DELINEATED WETLAND BOUNDARY
- TW TIDAL WETLAND LINE
- GRAVEL
- DECIDUOUS TREE 6" AND LARGER

DATE:	DESCRIPTION:	BY:
7/16/18	ISSUED FOR BID	

DELAWARE BAYSHORE BYWAY
LITTLE CREEK BOARDWALK AND WILDLIFE OBSERVATION TOWER
CONSTRUCTION PLAN
BASE BID

DELAWARE DEPARTMENT OF NATURAL RESOURCES AND ENVIRONMENTAL CONTROL

DESIGNED BY: RKK
DRAWN BY: RKK
BUILDING NO.: N/A
DATE: JULY 16, 2018
SCALE: 1" = 30'
SHEET NO.: C-2
DFW PROJECT #: FW-2-15
CONTRACT #: FW-2-15

NANCY RUTH BERGER LICENSED PROFESSIONAL ENGINEER STATE OF DELAWARE

10/16/2018 1:27:44 PM
\\balsrv05\v2015\2015\15010_dnrecFW\TASK 3 - Little Creek Observation Tower\Cadd\Contract1\Plans\cp01_lct.dgn

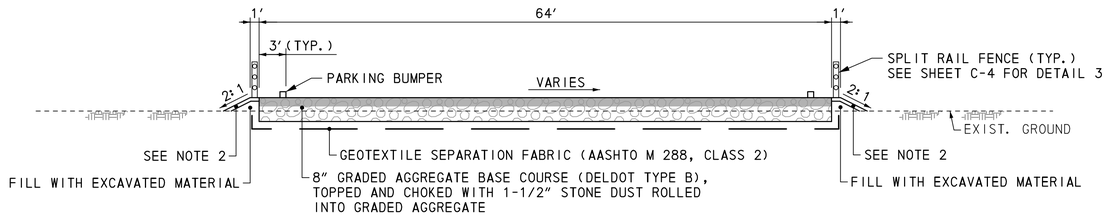

AA / C-3 **TYPICAL SECTION – PARKING LOT**

NOTES:

1. FILL MATERIAL REQUIRED TO MEET THE GRADE OF THE PROPOSED PARKING LOT SHALL BE FURNISHED AND INSTALLED PER THE REQUIREMENTS OF DELDOT BORROW, TYPE F.
2. STABILIZATION SHALL CONSIST OF VEGETATION AND DEAD LEAVES SALVAGED AND STOCKPILED PRIOR TO DISTURBANCE FOR REUSE AS MULCH.

LEGEND

CONSTRUCTION

- 8" GRADED AGGREGATE BASE COURSE CHOKED WITH 1-1/2" STONE DUST
- VARIABLE DEPTH GRADED AGGREGATE BASE COURSE (DELDOT TYPE B) TOPPED & CHOKED WITH 1-1/2" STONE DUST ROLLED INTO GRADED AGGREGATE
- P.C.C. PARKING AREA
- LOD — LIMIT OF DISTURBANCE
- 6 — CONTOUR (FEET)
- WOOD BOLLARD
- SPLIT RAIL FENCE

EXISTING SYMBOLS

- 9 — CONTOUR LINE
- WL — RK&K DELINEATED WETLAND BOUNDARY
- TW — TIDAL WETLAND LINE
- DECIDUOUS TREE 6" AND LARGER
- GRAVEL

NOTE:

1. THE ENTIRE PROJECT AREA IS WITHIN THE FEMA 100-YEAR FLOODPLAIN.

ADD/ALTERNATE NO. 1 (ADA PARKING AREA)

THE PROPOSED ADA PARKING AREA IMPROVEMENTS SHALL BE PROVIDED AS ADD/ALTERNATE NO. 1 TO THE BASE BID. THIS ADD/ALTERNATE SHALL INCLUDE:
- P.C.C. ACCESSIBLE PARKING PAD
- PARKING BUMPERS

ADD/ALTERNATE NO. 2 (TACKBOARD)

THE TACKBOARD INSTALLATION SHALL BE PROVIDED AS ADD/ALTERNATE NO. 2 TO THE BASE BID. THE PROPOSED 3'x6' SINGLE SIDED TACKBOARD WITH BULLETIN BOARDS TO BE FURNISHED BY OWNER AND INSTALLED BY CONTRACTOR. THE CONTRACTOR SHALL COORDINATE PICK-UP AND DELIVERY OF THE TACKBOARD WITH THE OWNER. THIS ADD/ALTERNATE ALSO INCLUDES 8" OF GRADE AGGREGATE BASE COURSE CHOKED WITH 1-1/2" STONE DUST.

PARKING LOT (BY OTHERS)

THE PROPOSED IMPROVEMENTS SHALL BE PROVIDED BY THE OWNER THE IMPROVEMENTS SHALL INCLUDE:
- CLEAR AND GRUB ADDITIONAL TREES AS REQUIRED TO CONSTRUCT ADDITIONAL PARKING LOT IMPROVEMENTS
- CONSTRUCTION OF A NEW PARKING LOT
- PARKING BUMPERS
- WOOD BOLLARDS
- SPLIT RAIL FENCE
- CLEARING AND GRUBBING
- EROSION AND SEDIMENT CONTROL

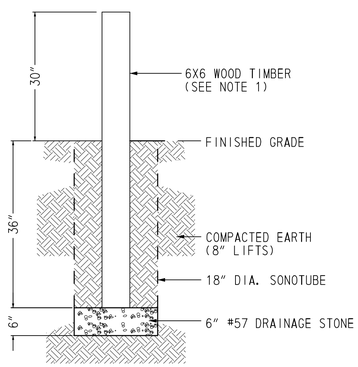

SECTION

WOOD BOLLARD

BOLLARD NOTE:

1. WOOD TIMBER SHALL BE PRESSURE TREATED WOOD WITH A WATERBORNE PRESERVATIVE TREATMENT MEETING THE REQUIREMENTS OF THE APWA USE CATEGORY FOR UC4A, GROUND CONTACT GENERAL USE.

1 / C-3 **BOLLARD DETAIL**

N.T.S.

COORDINATE LIST			
POINT NO.	NORTHING	EASTING	ELEVATION
1	420172.88	651963.58	6.1
2	420180.88	651981.91	5.9
3	420190.05	651977.91	5.8
4	420199.65	651999.91	5.6
5	420190.48	652003.91	5.7
6	420198.48	652022.24	5.5
7	420111.41	652060.24	MEET EXIST.
8	420085.81	652001.58	MEET EXIST.
9	420081.01	651990.58	MEET EXIST.
10	420082.85	651989.78	7.2
11	420096.93	651994.55	7.2

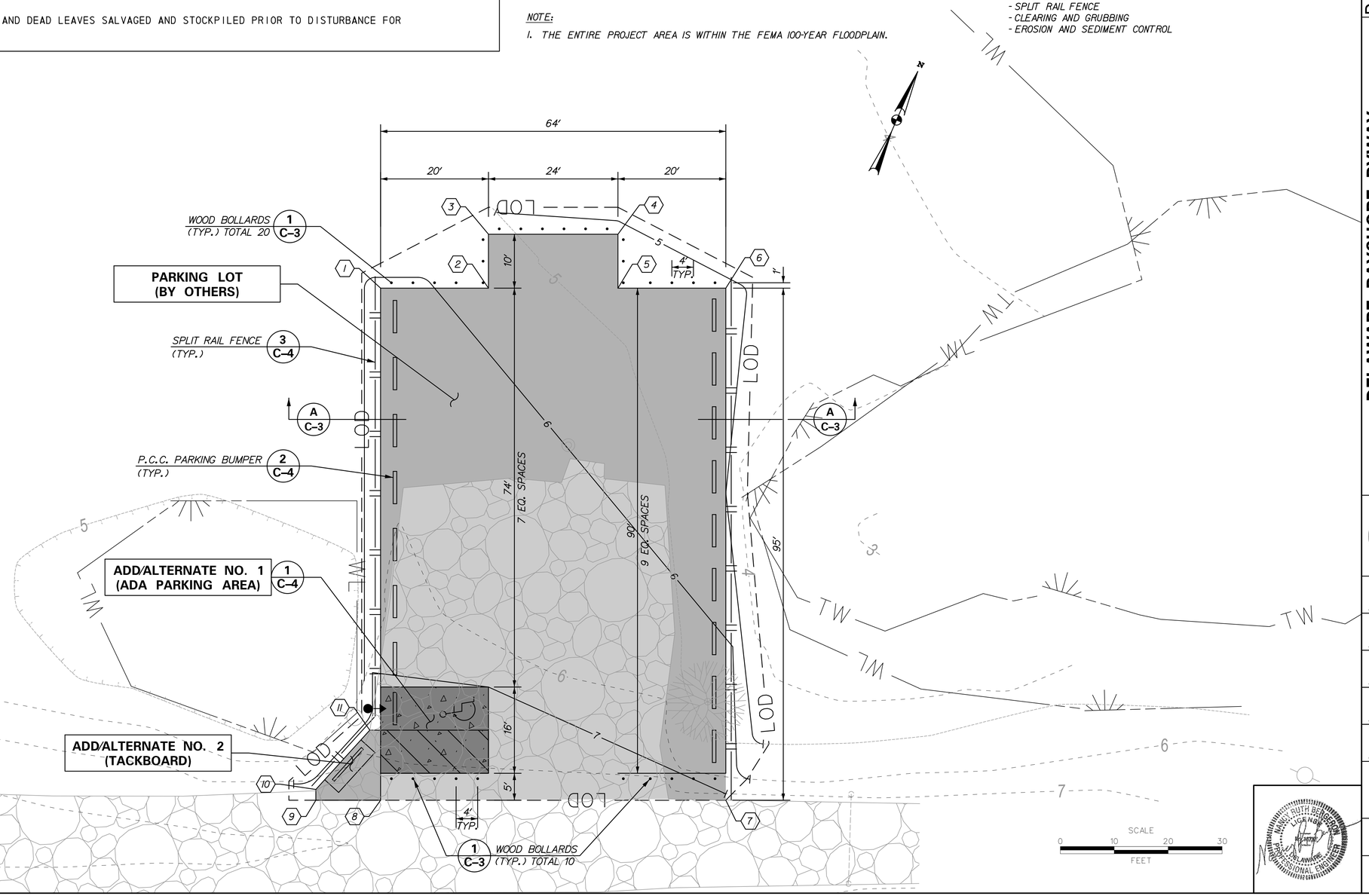

DATE:	DESCRIPTION:	BY:
7/16/18	ISSUED FOR BID	

DELAWARE BAYSHORE BYWAY
LITTLE CREEK BOARDWALK AND WILDLIFE OBSERVATION TOWER
PARKING ADD/ALTERNATE NO. 1 &2

DELAWARE DEPARTMENT OF NATURAL RESOURCES AND ENVIRONMENTAL CONTROL

DESIGNED BY: RKK
DRAWN BY: RKK
BUILDING NO.: N/A
DATE: JULY 16, 2018
SCALE: 1" = 10'
SHEET NO.: C-3
DFW PROJECT #: FW-2-15
CONTRACT #: FW-2-15

MARY RUTH BERGER LICENSED PROFESSIONAL ENGINEER STATE OF DELAWARE

10/16/2018 2:00:10 PM
\\bdsrv05\v2015\2015\15010_dnrecFW\TASK 3 - Little Creek Observation Tower\Cadd\Contract\Plans\cp02_lct.dgn

NOTES:

1. THE CONTRACTOR SHALL INSTALL SIGNS AND PAVEMENT MARKINGS WHERE SHOWN ON THE PLANS. ALL MATERIAL AND CONSTRUCTION SHALL BE IN ACCORDANCE WITH THE DELAWARE MANUAL ON UNIFORM TRAFFIC CONTROL DEVICES (DEMUTCD).
2. ALL ACCESSIBLE SIGNS SHALL BE 60" MINIMUM ABOVE THE FINISHED GROUND SURFACE MEASURED TO THE BOTTOM OF THE SIGN.

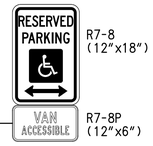

R7-8 (12"x18")

R7-8P (12"x6")

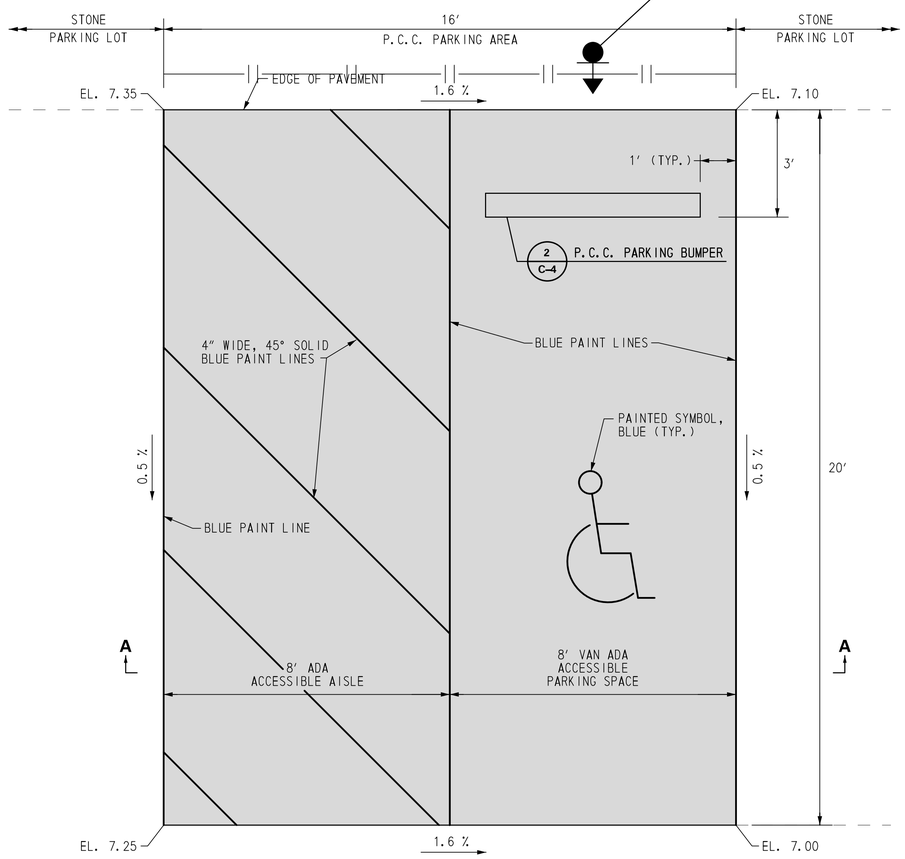

PLAN

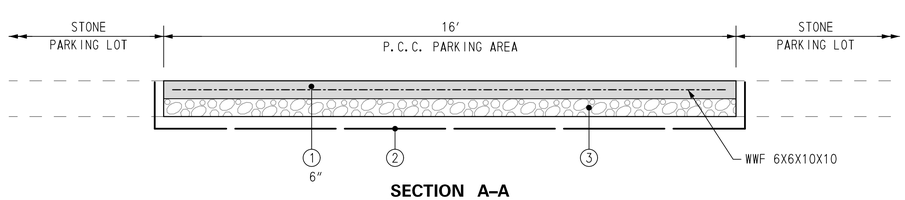

SECTION A–A

1 / C–4 VAN ACCESSIBLE PARKING SPACE DETAIL

N.T.S.

ADD/ALTERNATE No. 1

SCALE : NTS

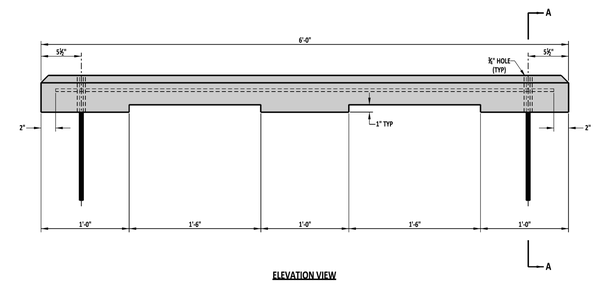

ELEVATION VIEW

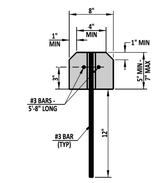

SECTION A-A

2 / C–4 P.C.C. PARKING BUMPER

N.T.S.

DELAWARE DEPARTMENT OF TRANSPORTATION	P.C.C. PARKING BUMPER			APPROVED	SIGNATURE ON FILE (TRAFFIC ENGINEER)	12/30/2014 (DATE)
	STANDARD NO. M-8 (2014)	SHT. 1	OF 1	RECOMMENDED	SIGNATURE ON FILE (DESIGN ENGINEER)	12/11/2014 (DATE)
						10/27/2014

SPLIT RAIL FENCE NOTES:

1. SPLIT RAIL FENCE SHALL BE A 3 RAIL SYSTEM.
2. ALL WOOD SHALL BE PRESSURE TREATED WOOD WITH A WATERBORNE PRESERVATIVE TREATMENT MEETING THE REQUIREMENTS OF THE APWA USE CATEGORY FOR UC4A, GROUND CONTACT GENERAL USE.
3. POST DIMENSIONS SHALL BE APPROXIMATELY 4"x6"x84".
4. RAILS SHALL BE TRIANGULAR WITH AN AVERAGE GIRTH OF 12-13".
5. POSTS SHALL BE EMBEDDED 30". THE HOLE SHALL BE BACKFILLED WITH THE ORIGINAL SOIL AND FIRMLY COMPACTED AROUND THE POST.

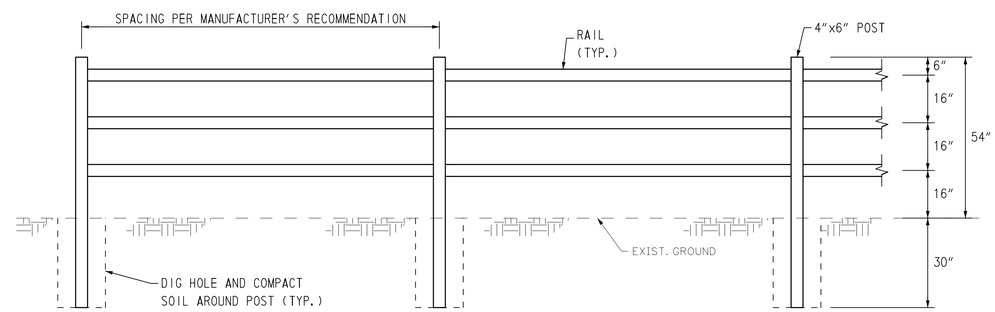

3 / C–4 SPLIT RAIL FENCE

N.T.S.

LEGEND

1. DELDOT CLASS A CONCRETE. CONCRETE SHALL BE 4500 PSI.
2. GEOTEXTILE SEPARATION FABRIC (AASHTO M 288, CLASS 2)
3. 6" GRADED AGGREGATE BASE COURSE

DATE:	DESCRIPTION:	BY:
7/16/18	ISSUED FOR BID	

DELAWARE BAYSHORE BYWAY
LITTLE CREEK BOARDWALK AND WILDLIFE OBSERVATION TOWER
CONSTRUCTION DETAILS
ADD/ALTERNATE NO.1

DELAWARE DEPARTMENT OF NATURAL RESOURCES AND ENVIRONMENTAL CONTROL

DESIGNED BY:	RKK
DRAWN BY:	RKK
BUILDING NO.:	N/A
DATE:	JULY 16, 2018
SCALE:	NOT TO SCALE
SHEET NO.:	C-4
DFW PROJECT #:	FW-2-15
CONTRACT #:	FW-2-15

NAOMI RUTH BERGER LICENSED PROFESSIONAL ENGINEER STATE OF DELAWARE

10/16/2018 4:11:51 PM
\\balsrv05\v2015\2015\15010_dnrecFW\TASK 3 - Little Creek Observation Tower\Cadd\Contract\Plans\d102_lct.dgn

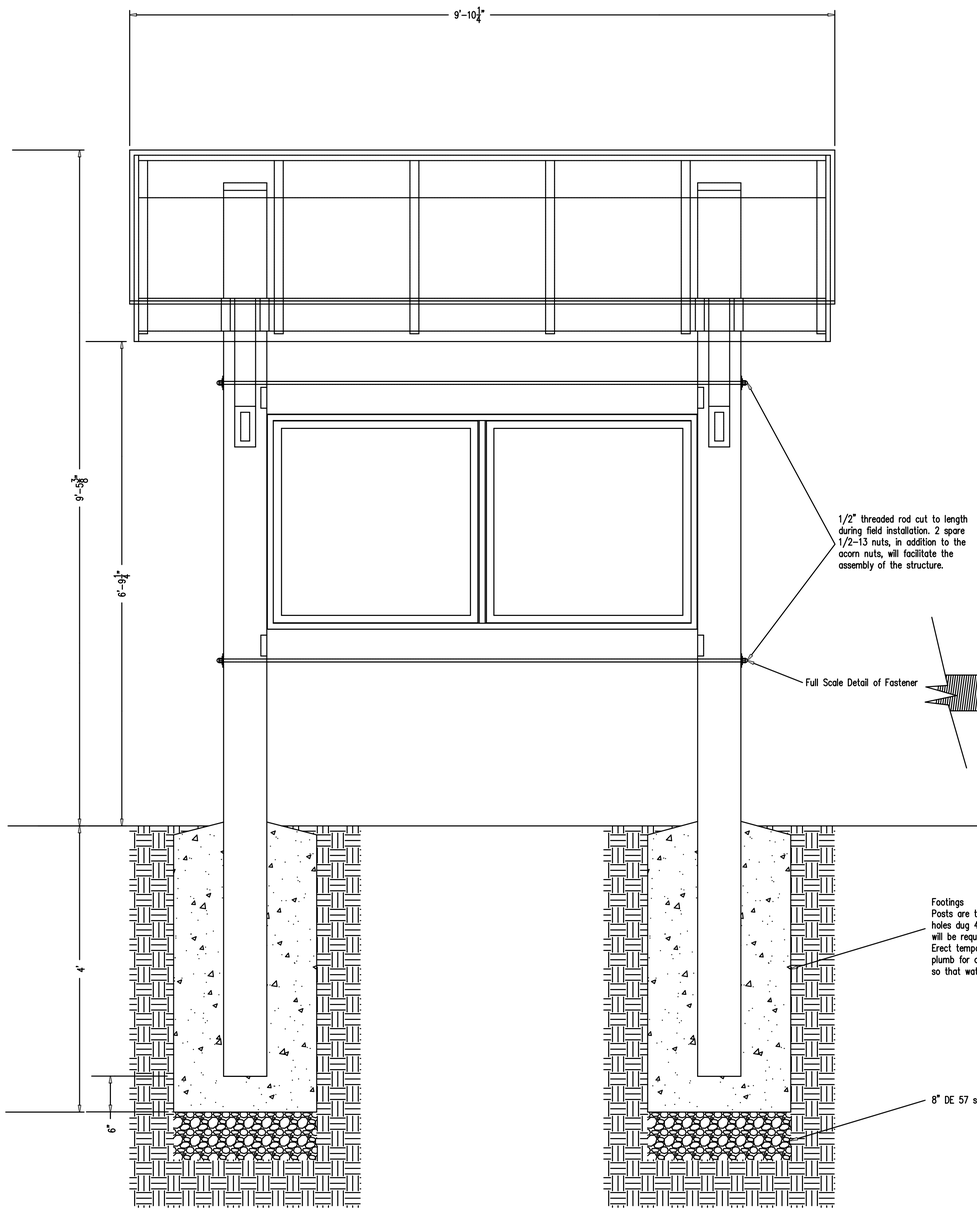

Front Elevation
For the sake of clarity, the roof treatment and detail of the cabinet opening back are not shown.

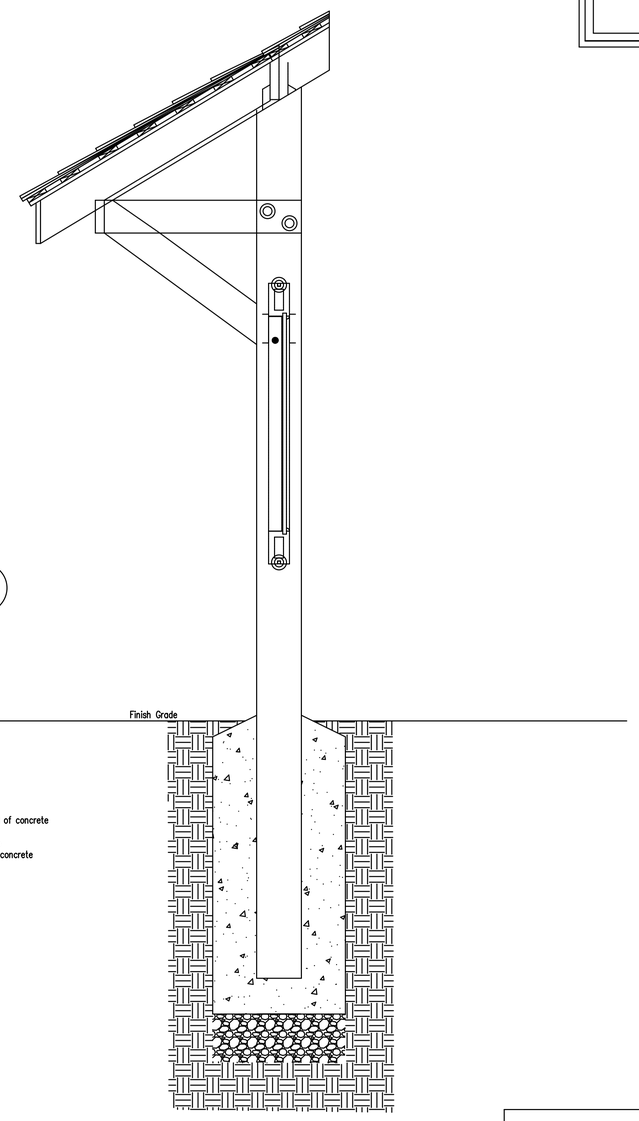

Side Elevation
Cabinet and Cabinet backing are shown. Gable end fascia removed for clarity.

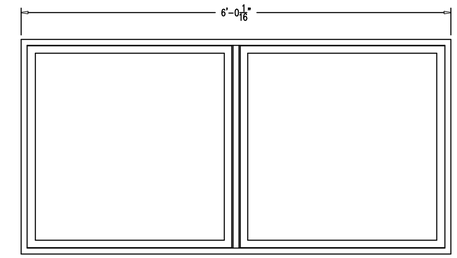

Cabinet

OWNER SUPPLIED DETAIL

DATE:	DESCRIPTION:	BY:
7/16/18	ISSUED FOR BID	

DELAWARE BAYSHORE BYWAY
LITTLE CREEK BOARDWALK AND WILDLIFE OBSERVATION TOWER

STANDARD FISH AND WILDLIFE TACKBOARD LARGE (3' X 6' CABINET) VERSION

DELAWARE DEPARTMENT OF NATURAL RESOURCES AND ENVIRONMENTAL CONTROL

DESIGNED BY: O.D.D.
DRAWN BY: O.D.D.
BUILDING NO.: O.D.D.
DATE: JULY 16, 2018
SCALE: SCALE
SHEET NO.: C-5
PROJECT #: FW-2-15
CONTRACT #: FW-2-15

NOTES:

1. THE CONTRACTOR SHALL DISASSEMBLE/REMOVE THE EXISTING TIMBER BOARDWALK.
2. TIMBER PILES SUPPORTING THE BOARDWALK SHALL BE CUT FLUSH WITH THE EXISTING GROUND.
3. TIMBER PILES IN CONFLICT WITH HELICAL ANCHORS SHALL BE REMOVED.
4. PROTECTIVE TIMBER MATTING SHALL BE PLACED TO MINIMIZE DISTURBANCE TO EXISTING GROUND.
5. DISMANTLE/REMOVE EXISTING STEEL TOWER.
6. EXISTING TOWER FOUNDATIONS SHALL BE REMOVED TO 6" BELOW GRADE AND COVERED WITH TOPSOIL.
7. ALL BOARDWALK AND TOWER MATERIALS DISMANTLED SHALL BECOME THE PROPERTY OF THE CONTRACTOR AND SHALL BE REMOVED FROM THE SITE.

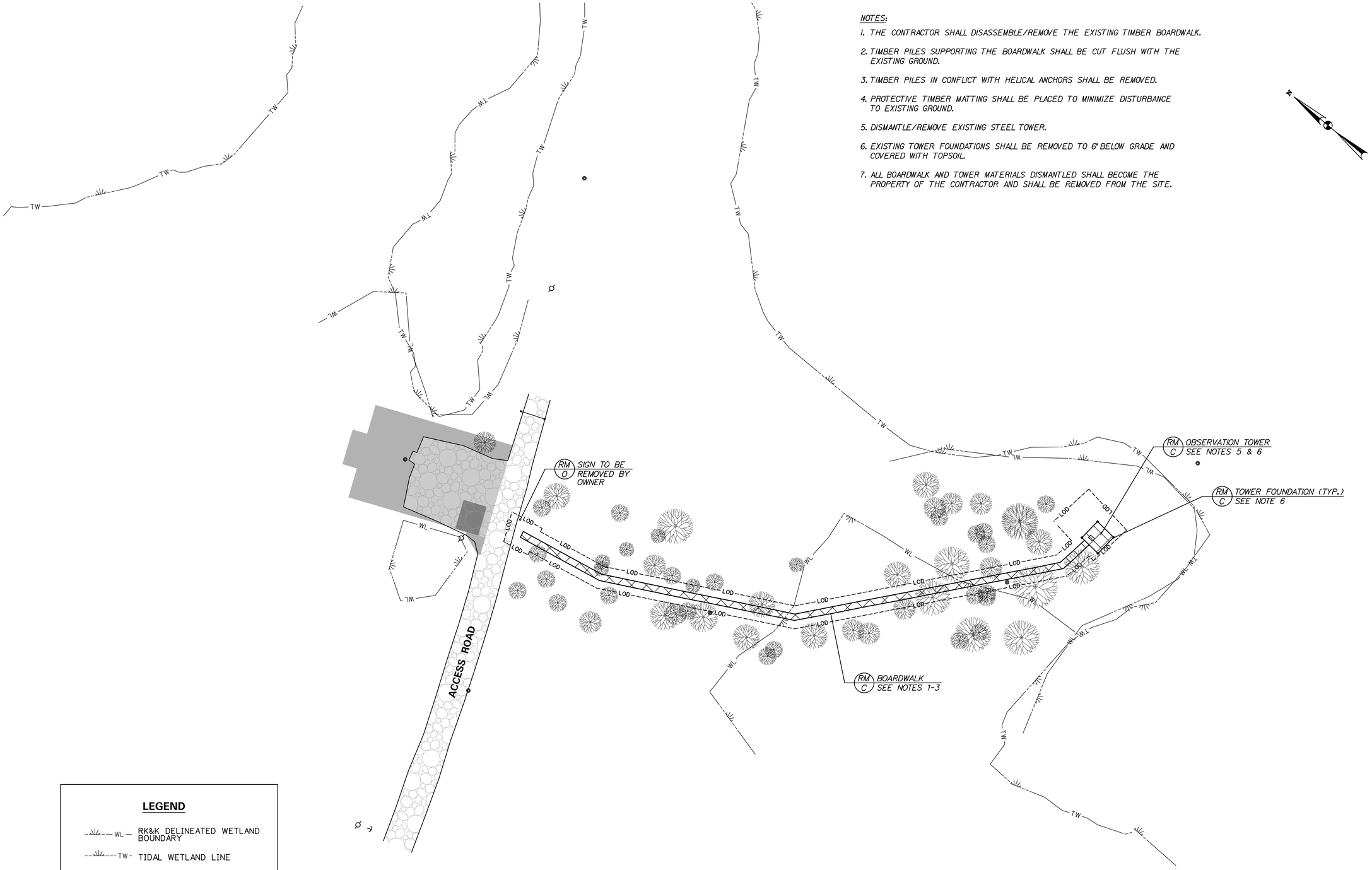

LEGEND

- WL — RK&K DELINEATED WETLAND BOUNDARY
- TW — TIDAL WETLAND LINE
- DECIDUOUS TREE 6" AND LARGER
- GRAVEL

SCALE
0 30 60 90
FEET

DATE:	DESCRIPTION:	BY:
7/16/18	ISSUED FOR BID	

DELAWARE BAYSHORE BYWAY LITTLE CREEK BOARDWALK AND WILDLIFE OBSERVATION TOWER

DEMOLITION PLAN

DELAWARE DEPARTMENT OF NATURAL RESOURCES AND ENVIRONMENTAL CONTROL

DESIGNED BY: RKK
DRAWN BY: RKK
BUILDING NO.: N/A
DATE: JULY 16, 2018
SCALE: 1" = 30'
SHEET NO.: C-6
DFW PROJECT #: FW-2-15
CONTRACT #: FW-2-15

NANCY RUTH BERENDT LICENSED DELAWARE PROFESSIONAL ENGINEER

7/16/2018 12:48:04 PM
\\baler\05\v2015\2015\15010_dnrecFW\TASK 3 - Little Creek Observation Tower\Cadd\Contract\Plans\cp03_lct.dgn

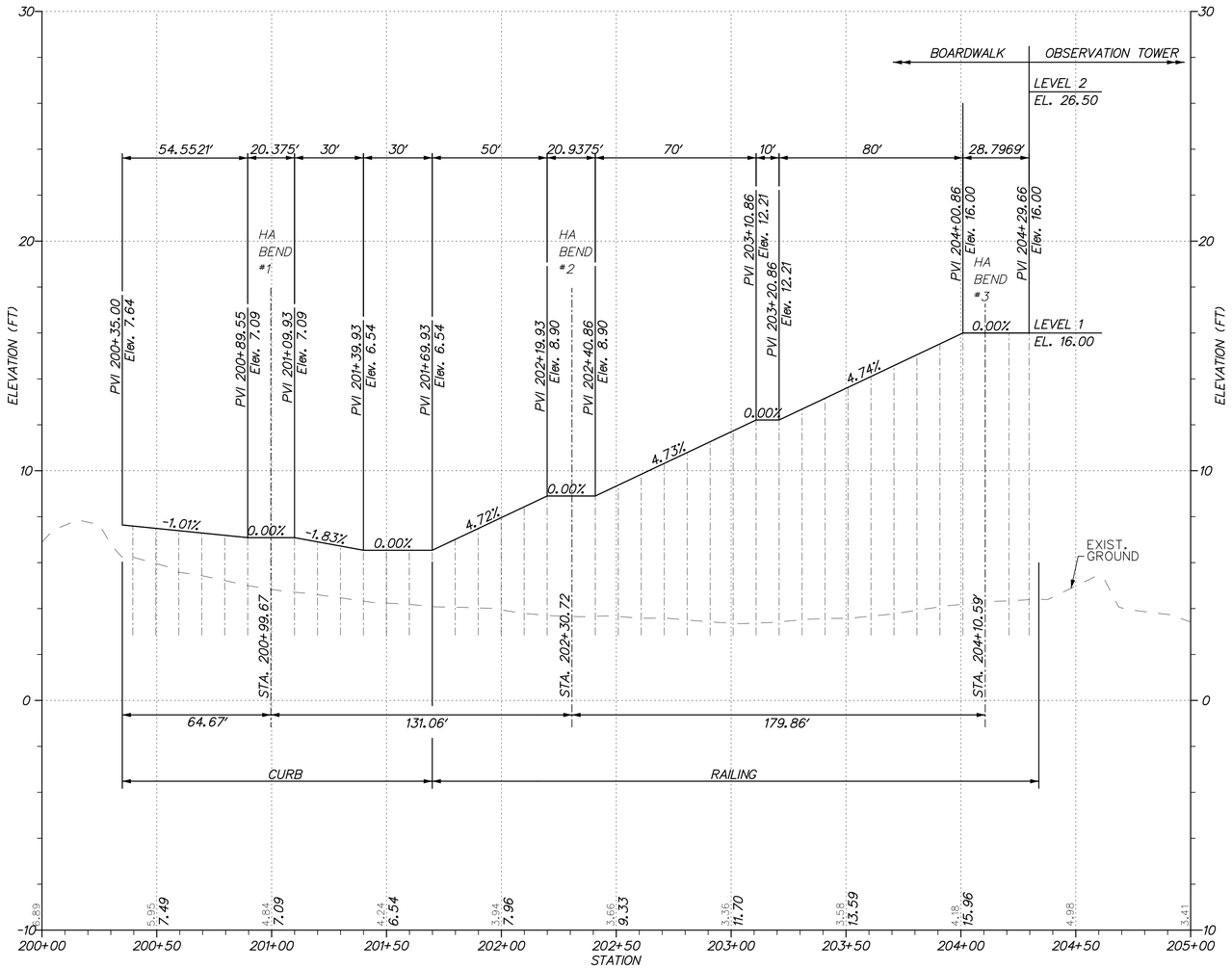

SCALE
0 30 60 90
FEET

DATE: DESCRIPTION: BY:

DATE: DESCRIPTION: BY:
7/16/18 ISSUED FOR BID

DELAWARE BAYSHORE BYWAY LITTLE CREEK BOARDWALK AND WILDLIFE OBSERVATION TOWER

BOARDWALK

DELAWARE DEPARTMENT OF NATURAL RESOURCES AND ENVIRONMENTAL CONTROL

DESIGNED BY: RKK

DRAWN BY: RKK

BUILDING NO.: N/A

DATE: JULY 16, 2018

SCALE: 1" = 30'

VERTICAL SCALE FEET 0 3 6 9

SHEET NO.: C-7

DFW PROJECT #: FW-2-15

CONTRACT #: FW-2-15

NANCY RUTH BERGERON LICENSED PROFESSIONAL ENGINEER DELAWARE

7/16/2018 12:48:25 PM
\\balsrv05\v2015\2015\15010_dnrecFW\TASK 3 - Little Creek Observation Tower\Cadd\Contract\Plans\pf01_lct.dgn

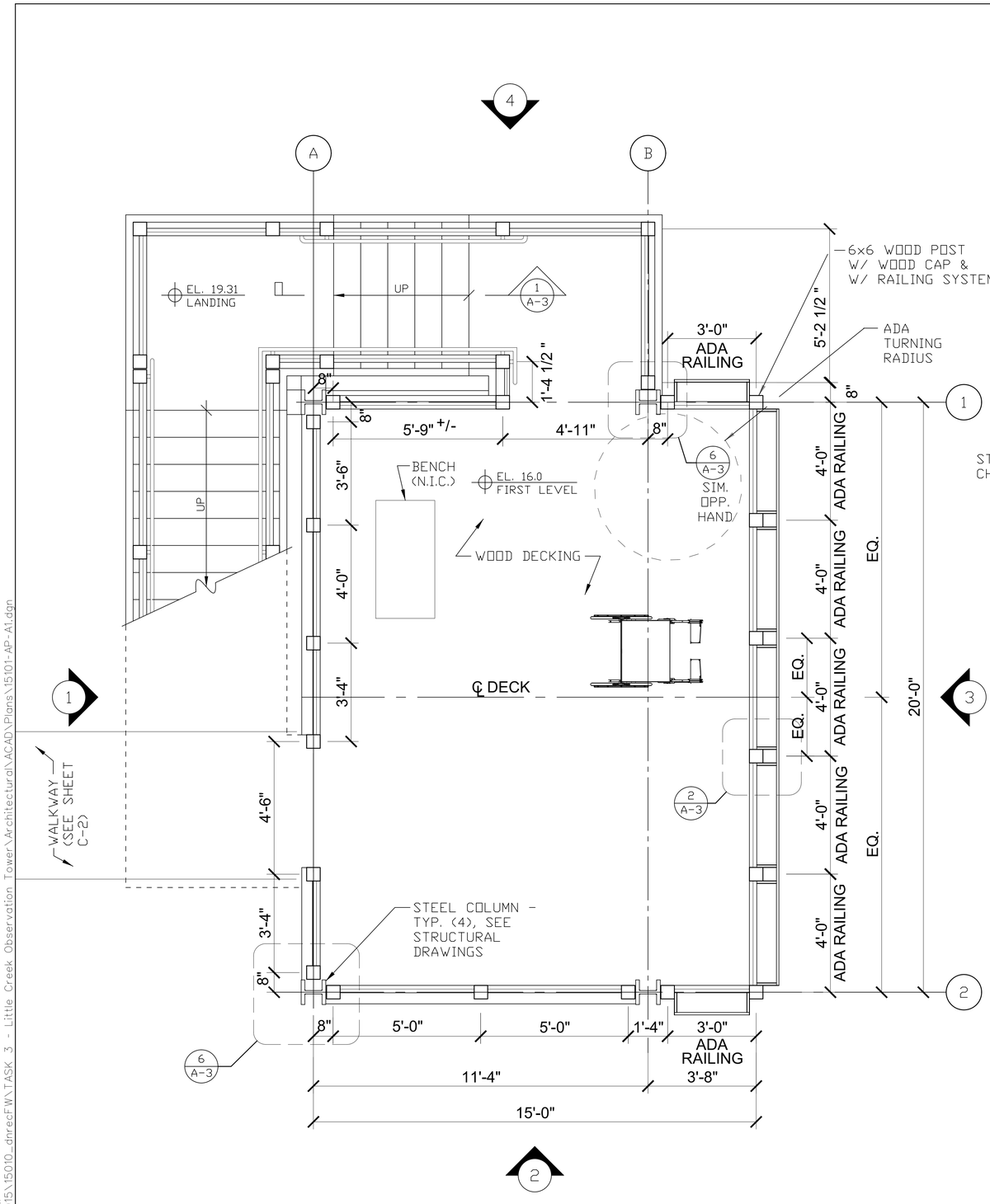

1 Observation Tower First Level Plan
1/2"=1'-0"

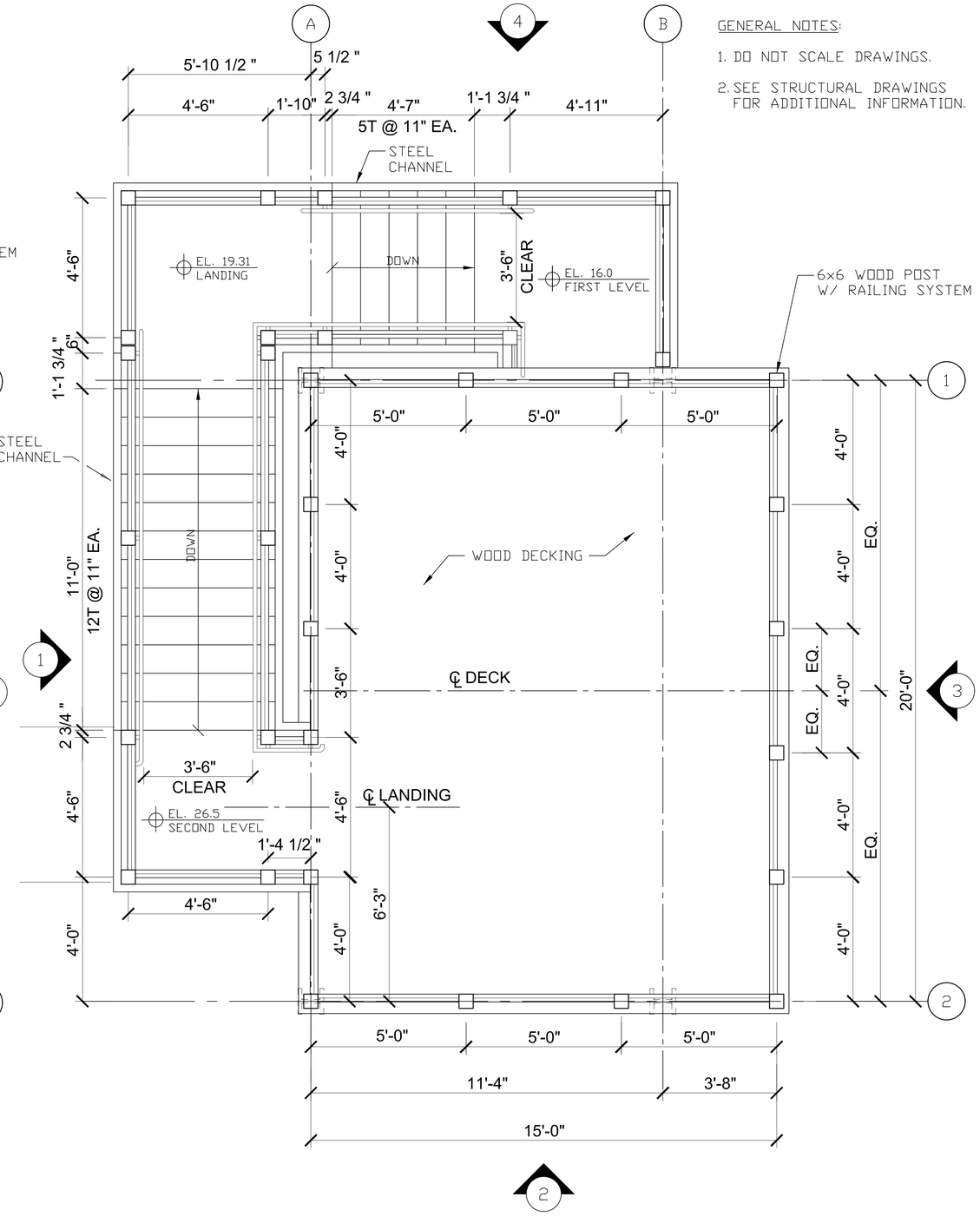

2 Observation Tower Second Level Plan
1/2"=1'-0"

GENERAL NOTES:

1. DO NOT SCALE DRAWINGS.
2. SEE STRUCTURAL DRAWINGS FOR ADDITIONAL INFORMATION.

DATE:	DESCRIPTION:	BY:
7/16/2018	ISSUED FOR BID	DW

DELAWARE BAYSHORE BYWAY LITTLE CREEK BOARDWALK AND WILDLIFE OBSERVATION TOWER

OBSERVATION TOWER PLAN

DELAWARE DEPARTMENT OF NATURAL RESOURCES AND ENVIRONMENTAL CONTROL

DESIGNED BY:	RKK
DRAWN BY:	RKK
BUILDING NO.:	N/A
DATE:	JULY 16, 2018
SCALE:	1/2"=1'-0"
SHEET NO.:	A-1
DFW PROJECT #:	FW-2-15
CONTRACT #:	FW-2-15

NANCY RUTH BERENDT
LICENSED
DELAWARE
PROFESSIONAL ENGINEER

7/16/2018 1:06:25 PM
\\bdlsrv05\v2015\2015\15010_dnrecFW\TASK 3 - Little Creek Observation Tower\Architectural\ACAD\Plans\15101-AP-A1.dgn

GENERAL NOTES:

1. DO NOT SCALE DRAWINGS.
2. SEE STRUCTURAL DRAWINGS FOR ADDITIONAL INFORMATION.

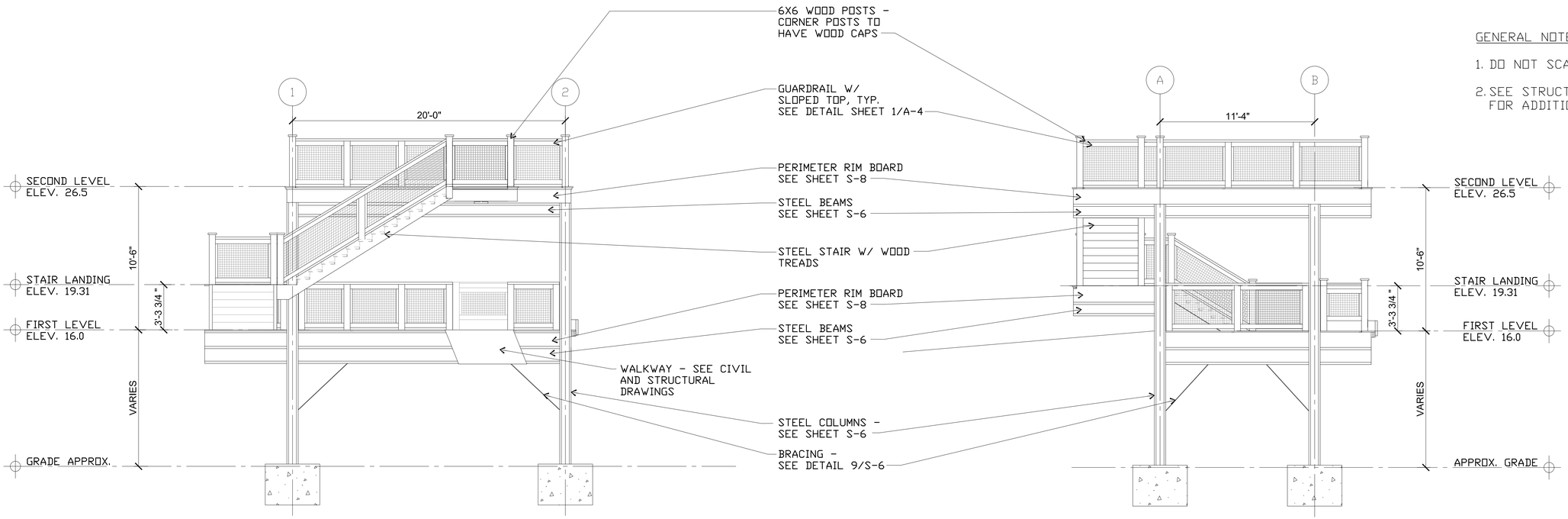

1 West Elevation
1/4"=1'-0"

2 South Elevation
1/4"=1'-0"

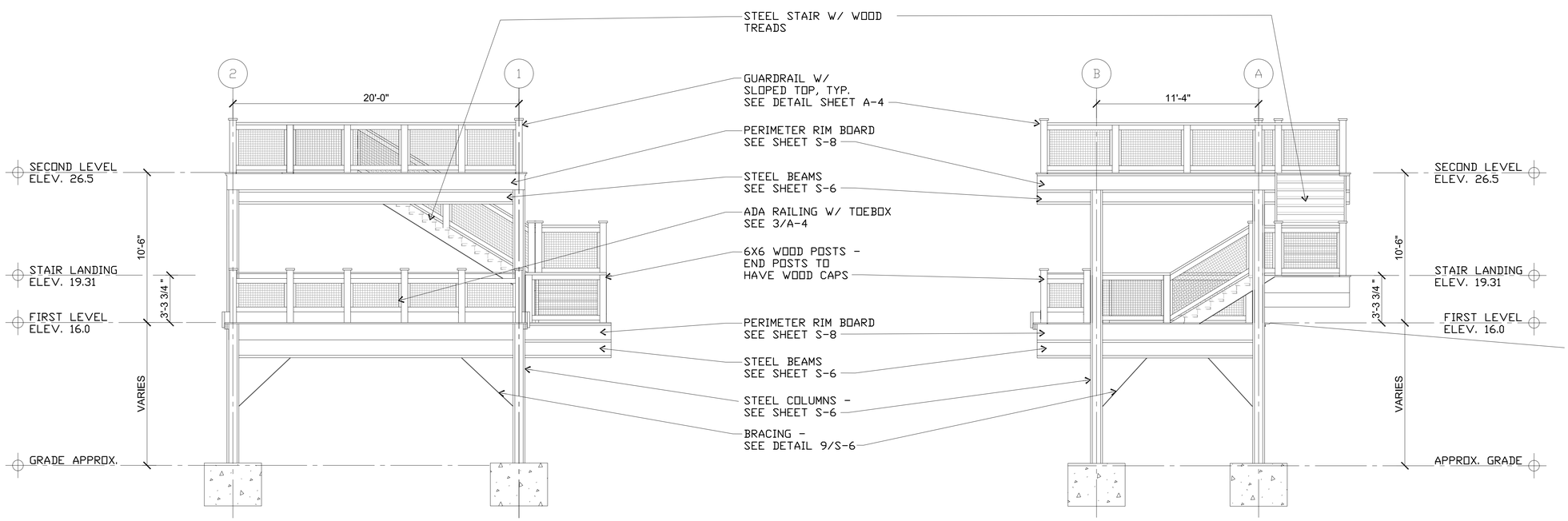

3 East Elevation
1/4"=1'-0"

4 North Elevation
1/4"=1'-0"

DATE:	DESCRIPTION:	BY:
7/16/2018	ISSUED FOR BID	

DELAWARE BAYSHORE BYWAY LITTLE CREEK BOARDWALK AND WILDLIFE OBSERVATION TOWER

OBSERVATION TOWER ELEVATIONS

DELAWARE DEPARTMENT OF NATURAL RESOURCES AND ENVIRONMENTAL CONTROL

DESIGNED BY: RKK
DRAWN BY: RKK
BUILDING NO.: N/A
DATE: JULY 16, 2018
SCALE: AS NOTED
SHEET NO.: A-2
DFW PROJECT #: FW-2-15
CONTRACT #: FW-2-15

NANCY RUTH BERNEGER LICENSED PROFESSIONAL ENGINEER DELAWARE

7/16/2018 1:31:38 PM
\\baserv05\v2015\2015\15010_dnrec\FW\TASK 3 - Little Creek Observation Tower\Architectural\ACAD\Plans\15101-AP-A2.dwg

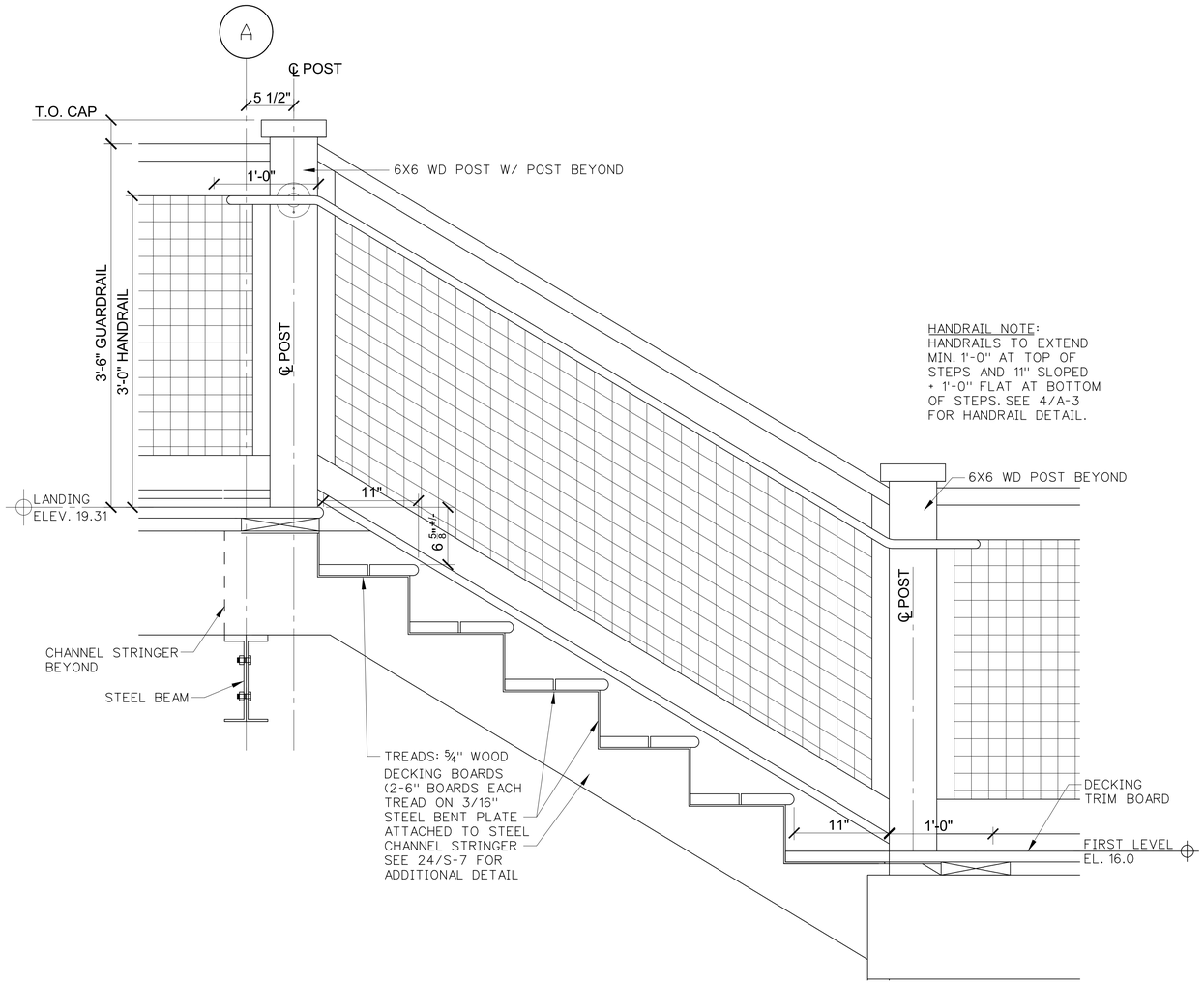

HANDRAIL NOTE:
HANDRAILS TO EXTEND MIN. 1'-0" AT TOP OF STEPS AND 11" SLOPED + 1'-0" FLAT AT BOTTOM OF STEPS. SEE 4/A-3 FOR HANDRAIL DETAIL.

1 / A-3 STAIR SECTION DETAIL
SCALE: 1 1/2"=1'-0"

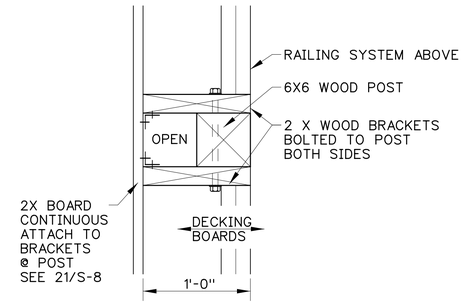

2 / A-3 PLAN DETAIL @ TOE BOX
SCALE: 1 1/2"=1'-0"

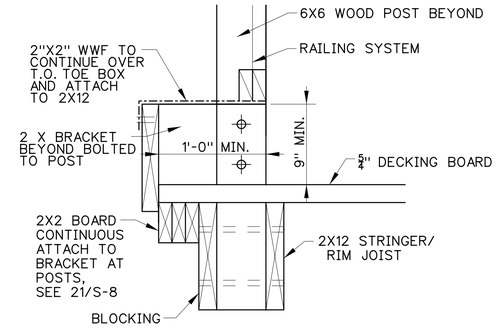

3 / A-3 SECTION DETAIL @ TOE BOX
SCALE: 1 1/2"=1'-0"

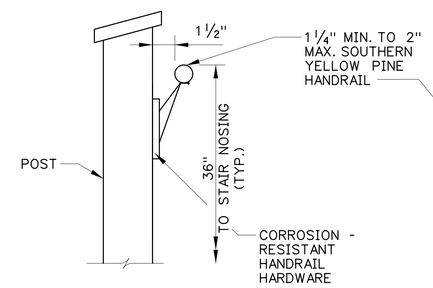

4 / A-3 DETAIL @ HANDRAIL
SCALE: 1 1/2"=1'-0"

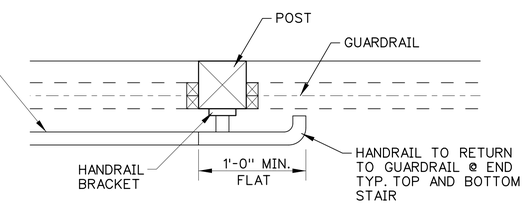

5 / A-3 PLAN DETAIL @ HANDRAIL
SCALE: 1 1/2"=1'-0"

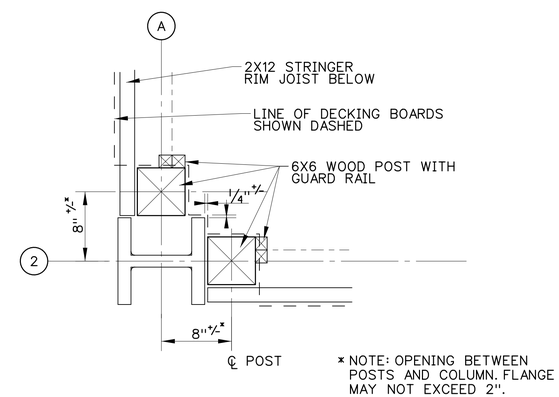

* NOTE: OPENING BETWEEN POSTS AND COLUMN. FLANGE MAY NOT EXCEED 2".

6 / A-3 PLAN DETAIL @ COLUMN (FIRST LEVEL)
SCALE: 1 1/2"=1'-0"

3/4"=1'-0" 12" 6" 0 1' 2' 3'
1/2"=1'-0" 12" 0 1' 2' 3' 4' 5'

NANCY RUTH BERGERON LICENSED PROFESSIONAL ENGINEER DELAWARE

DATE:	DESCRIPTION:	BY:
7/16/2018	ISSUED FOR BID	

DELAWARE BAYSHORE BYWAY
LITTLE CREEK BOARDWALK AND WILDLIFE OBSERVATION TOWER

STAIR PLAN & SECTIONS

DELAWARE DEPARTMENT OF NATURAL RESOURCES AND ENVIRONMENTAL CONTROL

DESIGNED BY: RKK
DRAWN BY: RKK
BUILDING NO.: N/A
DATE: JULY 16, 2018
SCALE: AS NOTED
SHEET NO.: A-3
DFW PROJECT #: FW-2-15
CONTRACT #: FW-2-15

7/16/2018 1:51:39 PM
\\baisrv05\V2015\2015\15010_dnrecFW\TASK 3 - Little Creek Observation Tower\Architectural\ACAD\Plans\15101-AP-A3.dwg

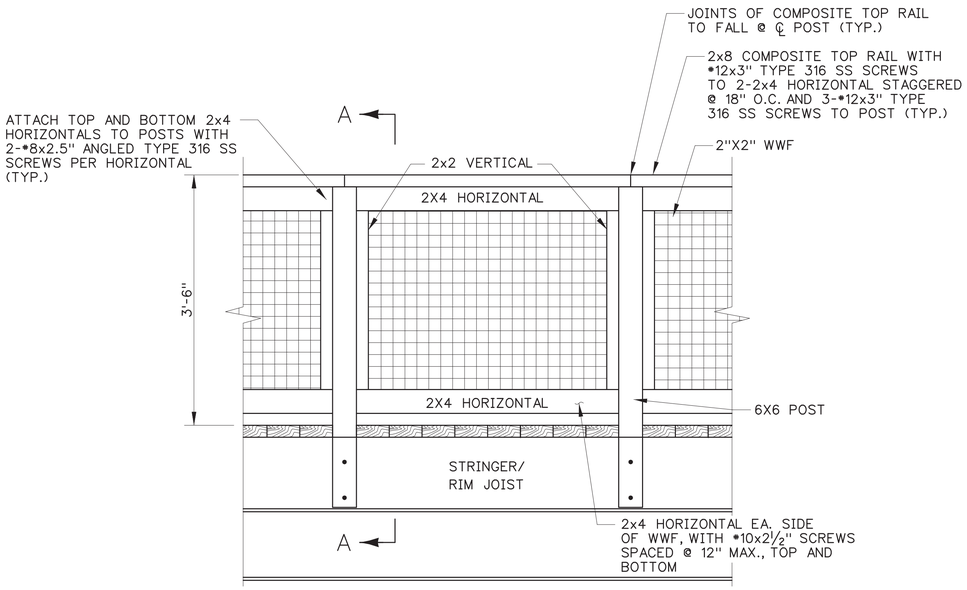

1 / A-4 RAILING ELEVATION @ TYPICAL

SCALE: 1"=1'-0"

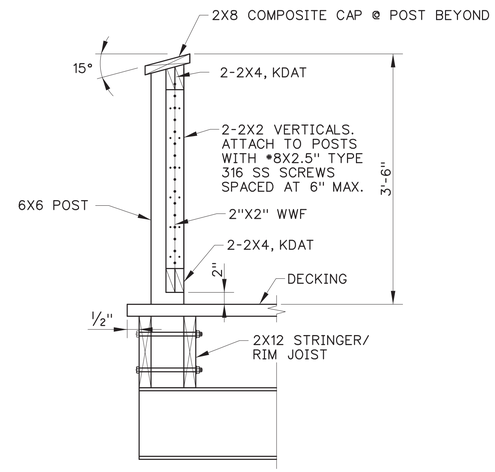

2 / A-4 SECTION A-A

SCALE: 1"=1'-0"

RAILING NOTES:

1. THE WIRE MESH SHALL BE 2"x2" WWF WITH 0.12 WIRE DIAMETER AND SHALL BE HOT-DIP GALVANIZED. 2"X2" WWF TO EXTEND TO OUTER EDGES OF HORIZONTALS AND VERTICALS TO ENGAGE SCREWS.
2. THE WIRE MESH SHALL BE ATTACHED TO THE HORIZONTAL 2x4 TOP AND BOTTOM WITH HOT-DIP GALVANIZED 18 GAUGE WIRE STAPLES WITH MINIMUM 1#2" LEGS AT 12" CENTER TO CENTER.
3. 2x4 HORIZONTALS SHALL BE KILN DRIED AFTER TREATMENT (KDAT)
4. SEE STRUCTURAL DRAWING S-8 FOR ADDITIONAL RAILING INFORMATION.
5. RAILING POST CONNECTION CONFIGURATIONS FOR WHICH A DETAIL HAS NOT BEEN PROVIDED SHALL BE SECURELY BRACED AND CONNECTED USING METHODS SIMILAR TO THOSE SHOWN HERE. CONNECTIONS SHALL INCLUDE BEARING PLATES TO PROVIDE A LARGE BEARING AREA UNDER THE BOLT HEADS AND TENSION HOLDDOWNS TO TRANSMIT PRYING FORCES INTO THE JOISTS/ BLOCKING THROUGH SHEAR IN THE FASTENERS. IN NO CASE SHALL RAILING POSTS BE CONNECTED ONLY TO THE RIM JOIST.
6. RAILING AND CURB POST LOCATIONS SHOWN ON THE FRAMING PLANS ARE APPROXIMATE. CONTRACTOR SHALL DETERMINE FINAL POST LAYOUT IN ACCORDANCE WITH THE SPACING REQUIREMENTS ON THIS DRAWING. THE RAILING SHALL NOT ALLOW PASSAGE OF A 4" SPHERE AT ANY POINT.
7. HANDRAILS SHALL BE PLACED IN LOCATIONS AS INDICATED ON THE PLANS AND SHALL RETURN TO THE RAILING AT EACH END.
8. SET RAILING POSTS PLUMB THROUGHOUT, INCLUDING RAMPED SECTIONS OF THE BOARDWALK WHERE THE WALKING SURFACE IS NOT LEVEL. FABRICATE INFILL PANELS AND POST CONNECTIONS TO ACCOMMODATE GRADE.
9. THE RAILING SHALL NOT ALLOW PASSAGE OF A 4" SPHERE AT ANY POINT.
10. HANDRAILS ARE REQUIRED FOR THE FULL LENGTH OF THE BOARDWALK AND AT STAIRWAY AND SHALL RETURN TO THE RAILING AT EACH END.
11. GALVANIZED STEEL BRACKETS SHALL BE PROVIDED AT POSTS TO RESTRICT LATERAL MOVEMENT OF THE 11#2"DIA. STEEL ROD OR TUBE.
12. ALL STEEL COMPONENTS SHALL BE HOT DIP GALVANIZED.

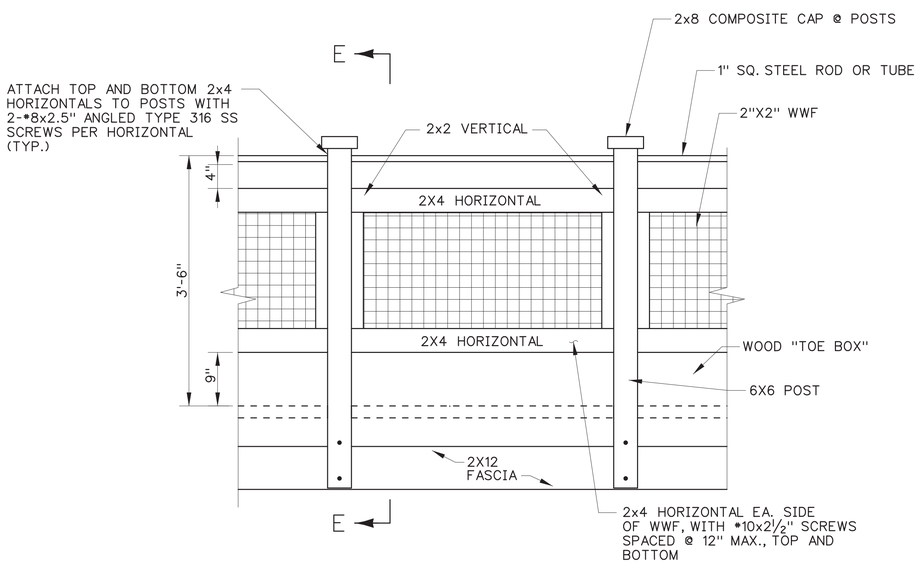

3 / A-4 RAILING ELEVATION @ ADA RAIL

SCALE: 1"=1'-0"

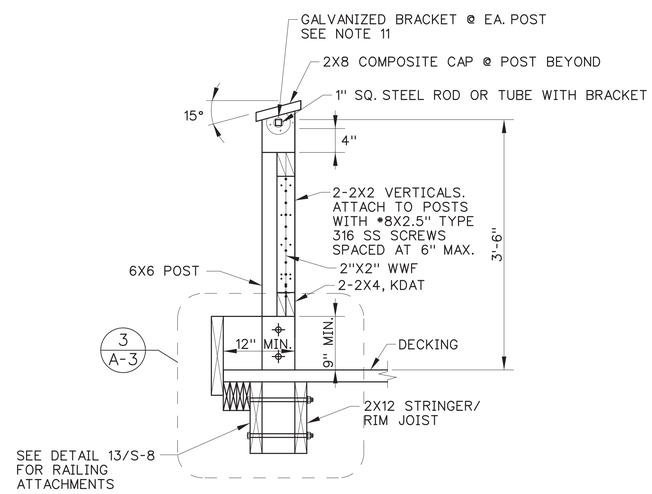

4 / A-4 SECTION E-E

SCALE: 1"=1'-0"

DATE:	DESCRIPTION:	BY:
7/16/2018	ISSUED FOR BID	

DELAWARE BAYSHORE BYWAY
LITTLE CREEK BOARDWALK AND
WILDLIFE OBSERVATION TOWER

RAILING ELEVATIONS & DETAILS

DELAWARE DEPARTMENT OF NATURAL RESOURCES AND ENVIRONMENTAL CONTROL

DESIGNED BY:	RKK
DRAWN BY:	RKK
BUILDING NO.:	N/A
DATE:	JULY 16, 2018
SCALE:	AS NOTED
SHEET NO.:	A-4
DFW PROJECT #:	FW-2-15
CONTRACT #:	FW-2-15

MARY RUTH BERRERA LICENSED PROFESSIONAL ENGINEER DELAWARE

7/16/2018 2:01:17 PM
\\balsrv05\v2015\2015\15010_dnrecFW\TASK 3 - Little Creek Observation Tower\Architectural\ACAD\Plans\15101-AP-A4.dgn

ABBREVIATIONS

AFF	ABOVE FINISHED FLOOR
ADD	ADDENDUM
ADD'L	ADDITIONAL
ADJ	ADJACENT
ALT	ALTERNATE
APPROX	APPROXIMATE
ARCH	ARCHITECTURAL
AESS	ARCHITECTURAL EXPOSED STRUCTURAL STEEL
BM	BEAM
BRG, BRNG	BEARING
BP	BEARING PLATE
BW	BEARING WALL
BTWN	BETWEEN
BLKG	BLOCKING
BS	BOTH SIDES
BOT	BOTTOM
B.O.	BOTTOM OF
BLDG	BUILDING
CANT	CANTILEVER
CANT LE	CANTILEVER LEFT END
CANT RE	CANTILEVER RIGHT END
CIP	CAST IN PLACE
CTR	CENTER
CL	CENTER LINE
CTD	CENTERED
CLR	CLEAR
COL	COLUMN
CONC	CONCRETE
CC	CONCRETE COLUMN
CMU	CONCRETE MASONRY UNIT
CONN	CONNECTION
CJ	CONSTRUCTION JOINT
CONST	CONSTRUCTION
CONT	CONTINUOUS
CJ	CONTROL JOINT
COORD	COORDINATE
CW	CURTAIN WALL
DL	DEAD LOAD
DJ	DEFLECTION JOINT
D	DEPTH, DEEP
DTL	DETAIL
DIA, Ø	DIAMETER
DIM	DIMENSION
DBL	DOUBLE
DWLS	DOWELS
DN	DOWN
DWG	DRAWING
DWGS	DRAWINGS
EA	EACH
EF	EACH FACE
EW	EACH WAY
EWEF	EACH WAY EACH FACE
EOS	EDGE OF SLAB
EL	ELEVATION
ELEV	ELEVATOR
EQ	EQUAL
EQUIP	EQUIPMENT
EXIST	EXISTING
EXP BLT	EXPANSION BOLT
EJ	EXPANSION JOINT
EXT	EXTERIOR
EIFS	EXTERIOR INSULATION FINISH SYSTEM
FIN	FINISH
FF	FINISH FLOOR
FLR	FLOOR
FD	FLOOR DRAIN
FT	FOOT
FDN	FOUNDATION
FRM	FRAMING

GALV	GALVANIZED
GA	GAUGE
GEN	GENERAL
GT	GIRDER TRUSS
GR	GRADE
GB	GRADE BEAM
GND	GROUND
GYP BD	GYPSUM BOARD
HDW	HARDWARE
HS	HAUNCHED SLAB
HS	HEADED STUD
HT	HEIGHT
HP	HIGH POINT
HB	HOIST BEAM
HK	HOOK
HORIZ	HORIZONTAL
HEF	HORIZONTAL EACH FACE
HIF	HORIZONTAL INSIDE FACE
HOF	HORIZONTAL OUTSIDE FACE
HR	HOUR
HSKP	HOUSEKEEPING
INT	INTERIOR
IBC	INTERNATIONAL BUILDING CODE
JT	JOINT
k	KIPS (1000lbs)
KSF	KIPS PER SQUARE FOOT
KO	KNOCK-OUT
L	ANGLE
LBS	POUNDS
LW	LIGHT WEIGHT CONCRETE
LL	LIVE LOAD
LOC	LOCATION
LG	LONG
LLH	LONG LEG HORIZONTAL
LLV	LONG LEG VERTICAL
LP	LOW POINT
MANUF	MANUFACTURER
MAS	MASONRY
MO	MASONRY OPENING
MAT'L	MATERIAL
MAX	MAXIMUM
MECH	MECHANICAL
MEP	MECHANICAL, ELECTRICAL, PLUMBING
MEMB	MEMBRANE
MTL	METAL
MIN	MINIMUM
MISC	MISCELLANEOUS
NS	NEAR SIDE
NOM	NOMINAL
NBL	NON-BEARING LINTEL
NBMH	NON-BEARING METAL HEADER
NBWH	NON-BEARING WOOD HEADER
NW	NORMAL WEIGHT CONCRETE
N/A	NOT AVAILABLE
NIC	NOT IN CONTRACT
NTS	NOT TO SCALE
o/c	ON CENTER
OPNG	OPENING
OPP	OPPOSITE
OH	OPPOSITE HAND
OD	OUTSIDE DIAMETER
OSF	OUTSIDE FACE
PTD	PAINTED
PR	PAIR
PENT	PENTHOUSE
PL	PLATE
PLUMB	PLUMBING
PLYWD	PLYWOOD

PT	POINT
PCF	POUNDS PER CUBIC FOOT
PSF	POUNDS PER SQUARE FOOT
PSI	POUNDS PER SQUARE INCH
P/C	PRECAST CONCRETE
PREFAB	PREFABRICATED
PT	PRESSURE TREATED
PL	PROPERTY LINE
RAD	RADIUS
REF	REFER OR REFERENCE
RCP	REFLECTED CEILING PLAN
REINF	REINFORCING
REBAR	REINFORCING BAR
REQ'D	REQUIRED
RW	RETAINING WALL
RD	ROOF DRAIN
RR	ROOF RAFTER
RM	ROOM
RO	ROUGH OPENING
SCHED	SCHEDULE
SECT	SECTION
SIM	SIMILAR
SOG	SLAB ON GRADE
SSF	SOLID SURFACE
SPCG	SPACING
SPEC	SPECIFICATION
SQ	SQUARE
SS	STAINLESS STEEL
STD	STANDARD
SBC	STANDARD BUILDING CODE
STL	STEEL
SF	STEPPED FOOTING
STIFF	STIFFENER
STIR	STIRRUP
STRUC	STRUCTURAL
SO	STRUCTURAL OPENING
SDL	SUPERIMPOSED DEAD LOAD
SYM	SYMMETRICAL
THK	THICK, THICKNESS
TS	THICKENED SLAB
TSF	THICKENED SLAB FOOTING
T	TOP
T&B	TOP & BOTTOM
T.O.	TOP OF
T.O.B.	TOP OF BEAM
T.O.C.	TOP OF CONCRETE
T.O.CB.	TOP OF CURB
T.O.F.	TOP OF FOOTING
T.O.P.	TOP OF PARAPET
T.O.S.	TOP OF SLAB
T.O.STL.	TOP OF STEEL
T.O.W.	TOP OF WALL
TDS	TURNED DOWN SLAB
TN	TRENCH DRAIN
TYP.	TYPICAL
UNO	UNLESS NOTED OTHERWISE
VAR	VARIES
VERT	VERTICAL
WWF	WELDED WIRE FABRIC
WF	WIDE FLANGE
W	WIDTH, WIDE
WL	WIND LOAD
w/	WITH
w/o	WITHOUT
WD	WOOD
WP	WORK POINT

MATERIAL & SYMBOL LEGEND

SYMBOL	DESCRIPTION	SYMBOL	DESCRIPTION
	CONCRETE/ PRECAST CONCRETE		FULL/RIGID MOMENT CONNECTION – BEAM TO BEAM OR BEAM TO COLUMN AS SHOWN ON PLAN – PROVIDE FULL CAPACITY OF BEAM IN ADDITION TO FULL DEPTH SHEAR CONNECTION, U.N.O.
	COMPACTED EARTH / SITEWORK		CRIPPLE POINT IN STEEL MEMBER - SEE TYPICAL DETAIL FOR ADDITIONAL INFORMATION.
	CRUSHED STONE	S/ D	SLAB/ DECK CONSTRUCTION TAG – SEE SCHEDULE ON DRAWING FOR ADDITIONAL INFORMATION
	GROUT		
	STEEL		
	PLYWOOD SHEATHING/ DECKING		
	WOOD		

ANNOTATION SYMBOLS

SYMBOL	DESCRIPTION
1	SECTION MARK
A	BUILDING ELEVATION
A101	DETAIL/ ENLARGED PLAN CALLOUT
T.O. WHAT / EL. (SEE PLAN)	LEVEL DESIGNATION
B	STRUCTURAL GRID DESIGNATION
[...]	SPOT ELEVATION LOCATION
(_.__')	TOP OF FOOTING ELEVATION
[_.__']	TOP OF PIER ELEVATION

DRAWING LIST

DRAWING NUMBER	DRAWING TITLE / DESCRIPTION	REVISIONS: ISSUED FOR BID
S-1	STRUCTURAL COVER SHEET	●
S-2	STRUCTURAL GENERAL NOTES	●
S-3	STRUCTURAL SCHEDULES	●
S-4	BOARDWALK FOUNDATION PLAN - SHEET 1	●
S-5	BOARDWALK FOUNDATION PLAN - SHEET 2	●
S-6	OBSERVATION TOWER PLANS	●
S-7	OBSERVATION TOWER SECTIONS	●
S-8	OBSERVATION TOWER SECTIONS & DETAILS	●

PETER J. PATON REGISTERED No. 11041
8.22.2018

DATE:	DESCRIPTION:	BY:
7.16.2018	ISSUED FOR BID	PJP

DELAWARE'S BAYSHORE BYWAY
LITTLE CREEK BOARDWALK AND
WILDLIFE OBSERVATION TOWER

STRUCTURAL COVER SHEET

DELAWARE DEPARTMENT OF NATURAL RESOURCES AND ENVIRONMENTAL CONTROL

DESIGNED BY: P2STRENG
DRAWN BY: P2STRENG
BUILDING NO.: N/A
DATE: JULY 16, 2018
SCALE:
SHEET NO.: S-1
DFW PROJECT #: FW-2-15
CONTRACT #: FW-2-15

1/20/2017 8:11:33 AM
C:\Users\p2streng\AppData\Local\Temp\Temp1_SampleDrawings.zip\border_cc.dwg

OVERALL PROJECT REQUIREMENTS

	NOTES
1	ALL WORK SHALL BE COMPLETED IN ACCORDANCE WITH ALL DRAWINGS AND SPECIFICATIONS CONTAINED HEREIN.
2	ALL WORK RELATED TO THE STAGING, CONSTRUCTION PRACTICES, AND SAFETY OF THE PROJECTS WORKERS AND PROPERTY SHALL BE CONSIDERED MEANS AND METHODS AND SHALL BE COMPLETED BY THE CONTRACTOR IN ACCORDANCE WITH STANDARD INDUSTRY PRACTICE AND ALL CODES AND STANDARDS. VISITS TO THE SITE MADE BY THE ENGINEER ARE FOR THE REVIEW OF THE STRUCTURAL WORK FOR GENERAL CONFORMANCE WITH THE DRAWINGS AND SPECIFICATIONS AND ARE NOT FOR THE REVIEW OF CONTRACTOR RESPONSIBILITIES, INCLUDING BUT NOT LIMITED TO PROJECT SAFETY AND MEANS AND METHODS OF CONSTRUCTION.
3	ALL DRAWINGS HAVE BEEN PREPARED IN ACCORDANCE WITH THE 2015 INTERNATIONAL BUILDING CODE, AS WELL AS ALL REFERENCED STANDARDS CONTAINED THEREIN.
4	EVALUATION AND COMPLIANCE WITH LOADING RESTRICTIONS FOR MEANS AND METHODS OF CONSTRUCTION AS WELL AS STAGING FOR OTHER TRADES ARE THE RESPONSIBILITY OF THE CONTRACTOR.
5	ALL WORK SHALL BE INSPECTED IN ACCORDANCE WITH CHAPTER 17 OF THE REFERENCED BUILDING CODE. SUBMIT ALL REPORTS TO THE ENGINEER OF RECORD FOR REVIEW. AT THE COMPLETION OF THE PROJECT, THE SPECIAL INSPECTION REPORT SHALL BE COMPLETED, SIGNED BY THE SPECIAL INSPECTOR, AND SUBMITTED TO THE ENGINEER OF RECORD FOR RECORD PURPOSES.
6	SCALING OF DRAWINGS TO DETERMINE DIMENSIONS OF ELEMENTS IS NOT PERMITTED.
7	STRUCTURAL DRAWINGS SHALL NOT BE REPRODUCED TO CREATE SHOP DRAWINGS OR SHORING DOCUMENTATION WITHOUT THE EXPRESS WRITTEN CONSENT OF P2 STRUCTURAL ENGINEERING, LLC
8	ALL HORIZONTAL AND VERTICAL DIMENSIONS CONTAINED ON THE STRUCTURAL DRAWINGS WERE DEVELOPED BY OTHER DISCIPLINES FOR THE PURPOSE OF THIS PROJECT. ANY DIMENSIONS NOT SHOWN ON THE STRUCTURAL DRAWINGS SHOULD BE COORDINATED WITH THE OTHER DISCIPLINE DRAWINGS.
9	THE STRUCTURAL DOCUMENTS ARE TO BE USED IN COORDINATION WITH THE ARCHITECTURAL DRAWINGS AND SPECIFICATIONS AS WELL AS THOSE OF ALL OTHER DISCIPLINES. ANY DISCREPANCIES SHOULD BE BROUGHT TO THE ATTENTION OF THE DESIGN TEAM PRIOR TO THE COMMENCEMENT OF WORK.
10	ALL REQUESTED CHANGES IN WORK BY THE CONTRACTOR ARE SUBJECT TO THE APPROVAL OF THE DESIGN TEAM AND OWNER AND ARE CONSIDERED TO BE COMPLETED AT NO ADDITIONAL COST UNLESS SPECIFICALLY APPROVED. APPROVAL OF REQUESTED CHANGES DOES NOT CONSTITUTE APPROVAL OF AN INCREASE IN PROJECT COSTS.

SHOP DRAWING REQUIREMENTS

	NOTES
1	SHOP DRAWINGS SHALL BE SUBMITTED FOR THE FOLLOWING ITEMS FOR THIS THE PROJECT:
1.1	CONCRETE MIX DESIGNS INCLUDING ALL LABORATORY TESTING, MATERIALS, ETC.
1.2	REINFORCING SHOP DRAWINGS
1.3	ANCHOR BOLT AND CONCRETE EMBEDDED ASSEMBLIES
1.4	STEEL FRAMING
1.5	HELICAL PILE ANCHORS

FOUNDATIONS

	NOTES
1	PERFORM ALL FOUNDATION PREPARATION, EXCAVATION, PLACEMENT OF STRUCTURAL FILL AND / OR SOIL IMPROVEMENT WORK IN STRICT ACCORDANCE WITH THE GEOTECHNIAL EVALUATION AS PREPARED BY GEO-TECHNOLOGY ASSOCIATES (PROJECT NO. 170072, DATED FEBRUARY 28, 2017)
2	BOTTOM OF ALL FOOTINGS SUBJECTED TO FREEZE THAW CONDITIONS SHALL BE A MINIMUM 36 INCHES BELOW FINISH GRADE.
3	ALL STEEL HELICAL PILES SHALL BE AS SPECIFIED IN THE GEOTECHNICAL REPORT AND SHALL BE CAPABLE OF SAFELY SUPPORTING LOADS SHOWN ON DRAWING S-3.
4	PILING CONTRACTOR SHALL HAVE A MINIMUM OF 5 YEARS OF EXPERIENCE INSTALLING AND MONITORING THE SPECIFIED PILE TYPE.
5	COORDINATE ALL HELICAL PILES WITH SPECIAL PROVISIONS 619562 AND 619563 FOR PILE LOAD TEST REQUIREMENTS.

STEEL

	NOTES
1	ALL STRUCTURAL STEEL SHALL BE FABRICATED AND ERECTED IN ACCORDANCE WITH THE LATEST AISC CODE. ALL STRUCTURAL STEEL SHALL BE ASTM A588 GRADE 50 WEATHERING STEEL, CORTEN OR EQUAL TO BE APPROVED BY THE OWNER AND ENGINEER.
2	ORIENT ALL MILL CAMBER UPWARD DURING FABRICATION AND ERECTION.
3	ALL BOLTS USED FOR THE ANCHORAGE TO CONCRETE AS SPECIFIED ON THE DRAWINGS SHALL CONFORM TO ASTM F1554.
4	ALL CONNECTIONS SHALL BE BOLTED WITH A MINIMUM OF 3/4" A325N HIGH STRENGTH BOLTS OR WELDED AS DESIGNED BY THE STEEL FABRICATOR.
5	PROVIDE FULL DEPTH DOUBLE ANGLE CONNECTIONS ON ALL GIRDER AND BEAM CONNECTIONS TO COLUMNS. BOLTS SHALL BE AT 3-INCH O/C VERT.
6	FABRICATOR SHALL ADHERE TO ALL OSHA FEDERAL REGISTER STANDARDS SECTION 1926.777 WITH REGARD TO CONNECTION DESIGN.
7	ALL TENSION CONTROLLED BOLTS SHALL CONFORM TO THE REQUIREMENTS OF ASTM F1852 AND F2280.
8	ALL BRACE CONNECTIONS SHALL BE BOLTED WITH A MINIMUM OF 3/4 DIAMETER A325-SC HIGH STRENGTH BOLTS OR WELDED.
9	ALL STEEL WELDING RODS SHALL BE E70XX FOR STEEL CONNECTIONS
10	SUBMIT ALL STEEL SHOP DRAWINGS FOR REVIEW PRIOR TO ANY FABRICATION. SUBMIT CALCULATIONS FOR ALL BRACE CONNECTIONS TO COLUMNS (CALCULATIONS NEED NOT BE SIGNED AND SEALED)
11	ALL STEEL SHALL BE IN ACCORDANCE WITH THE BUY AMERICA ACT

CONCRETE

	NOTES
1	ALL CONCRETE SHALL BE READY-MIX AND PROPORTIONED ON THE BASIS OF LABORATORY TRIAL MIXTURE OR FIELD TEST DATA OR BOTH ACCORDING TO ACI301. DESIGN MIXTURES SHALL MEET THE REQUIREMENTS BELOW:
1.1	FOOTINGS AND FOUNDATION WALLS
	COMPRESSIVE STRENGTH OF 4500 PSI AT 28 DAYS MINIMUM.
	EXPOSURE CATEGORY: F2
2	ALL CONCRETE EXPOSED TO EXTERIOR CONDITIONS SHALL HAVE CHARACTERISTICS IN ACCORDANCE WITH ACI BUILDING CODE (ACI 318) AND THE 2015 INTERNATIONAL BUILDING CODE
3	CONTRACTOR IS RESPONSIBLE FOR THE PREPARATION OF DESIGN MIXTURES FOR EACH APPLICATION/LOCATION USED IN CONSTRUCTION AS NOTED ABOVE AND ON THE DRAWINGS.
4	ALL CONCRETE WORK SHALL COMPLY WITH THE REQUIREMENTS OF THE LATEST EDITIONS OF THE ACI BUILDING CODE (ACI 318), THE ACI DETAILING MANUAL (SP-66), AND THE SPECIFICATIONS FOR STRUCTURAL CONCRETE FOR BUILDINGS (ACI 301).
5	ALL REINFORCING STEEL SHALL BE MANUFACTURED FROM HIGH STRENGTH BILLET STEEL CONFORMING TO ASTM DESIGNATION A615 GRADE 60. LAP ALL BARS MINIMUM 48 BAR DIAMETERS UNLESS OTHERWISE NOTED.
6	CONCRETE SHALL ACHIEVE A MINIMUM OF 70 PERCENT OF THE DESIGN STRENGTH PRIOR TO STEEL ERECTION. WRITTEN CONFIRMATION OF THIS STRENGTH SHOULD BE SUBMITTED TO THE ENGINEER OF RECORD PRIOR TO THE COMMENCEMENT OF STEEL ERECTION.
7	SHOP DRAWINGS FOR CONCRETE MIX DESIGNS SHALL INCLUDE THE FOLLOWING INFORMATION:
7.1	MIXTURE IDENTIFICATION BY APPLICATION/LOCATION
7.2	SPECIFIED COMPRESSIVE STRENGTH, f'C, THAT IS APPLICABLE FOR THE APPLICATION
7.3	SPECIFIED EXPOSURE CLASS
7.4	DOCUMENTATION OF STRENGTH TEST RECORDS OF SIMILAR CLASS OF CONCRETE USED TO ESTABLISH STANDARD DEVIATION IN ACCORDANCE WITH ACI 318, WHEN TEST RECORDS EXIST
7.5	REQUIRED AVERAGE COMPRESSIVE STRENGTH, f'CR, FOR EACH CLASS OF CONCRETE
7.6	DOCUMENTATION OF REQUIRED AVERAGE COMPRESSIVE STRENGTH, f'CR, USED AS THE BASIS FOR SELECTION OF CONCRETE PROPORTIONS
7.7	INTENDED PLACEMENT METHOD
7.8	SLUMP OR SLUMP FLOW
7.9	AIR CONTENT
7.10	DRY AND WET DENSITY
7.11	W/C RATIO
7.12	DOCUMENTATION SUPPORTING OTHER SPECIFIED REQUIREMENTS OF CONCRETE MIXTURES
7.13	NOMINAL MAXIMUM AGGREGATE SIZE OR SIZE NUMBER
7.14	TYPE AND INFORMATION ABOUT THE INGREDIENT MATERIALS PROPOSED FOR USE.
8	CONCRETE TESTING SHALL CONFORM TO THE FOLLOWING:
8.1	SAMPLES SHALL BE TAKEN AT LEAST ONCE PER DAY AND ONCE FOR EACH 50cy OR 5000sf OF PLACED CONCRETE
8.2	TAKE SLUMP, AIR, TEMPERATURE FOR EACH CONCRETE CYLINDER SET TAKEN
8.3	CYLINDER TESTS SHALL BE AS FOLLOWS:
8.3.1	TEST ONE SET OF TWO CYLINDERS AT 7 DAYS
8.3.2	TEST ONE SET OF TWO CYLINDERS AT 28 DAYS
8.3.3	TEST ONE SET OF TWO CYLINDERS AT 56 DAYS

TIMBER

	NOTES
1	ALL STRUCTURAL TIMBER FRAMING, WALLS, BLOCKING, ETC SHALL BE HEM FIR #2 MINIMUM, STRESS GRADE LUMBER OR APPROVED EQUAL.
2	ALL STRUCTURAL TIMBER FRAMING SHALL HAVE THE FOLLOWING MINIMUM ALLOWABLE PROPERTIES – Fb = 850 PSI, Fv = 150 PSI, E = 1,300,000 PSI
3	ALL STRUCTURAL TIMBER MUST BE STAMPED IN ACCORDANCE WITH THE AMERICAN INSTITUTE OF TIMBER CONSTRUCTION'S "CONSTRUCTION MANUAL".
4	ALL STRUCTURAL TIMBER MUST BE STAMPED IN ACCORDANCE WITH THE AMERICAN INSTITUTE OF TIMBER CONSTRUCTION'S "CONSTRUCTION MANUAL".
5	ALL TIMBER AND TIMBER CONSTRUCTION SHALL COMPLY WITH LATEST EDITIONS OF THE FOLLOWING STANDARDS:
5.1	AMERICAN INSTITUTE OF TIMBER CONSTRUCTION: TIMBER CONSTRUCTION MANUAL.
5.2	NATIONAL FOREST PRODUCTS ASSOCIATION: NATIONAL DESIGN SPECIFICATION FOR WOOD CONSTRUCTION.
5.3	AMERICAN WOOD-PRESERVERS ASSOCIATION STANDARDS.
5.4	NATIONAL LUMBER MANUFACTURERS ASSOCIATION: NATIONAL DESIGN SPECIFICATION FOR STRESS-GRADE LUMBER AND ITS FASTENINGS.
6	ALL TIMBER CONNECTIONS SHALL BE MADE USING PREFABRICATED CONNECTORS. TOE-NAILING IS NOT PERMITTED AS THE FINAL CONNECTION UNLESS OTHERWISE APPROVED BY THE ENGINEER. SUBMIT MANUFACTURER'S DATA FOR REVIEW. FASTENERS SHALL BE AS MANUFACTURED BY SIMPSON STRONGTIE OR APPROVED EQUAL.
7	PROVIDE MINIMUM CONTINUOUS SOLID BLOCKING OR CROSS-BRIDGING LINES AT 8'-0" O/C MAX SPACING FOR ALL WOOD JOISTS AND WOOD RAFTERS
8	PROVIDE A MINIMUM OF ONE LINE OF BLOCKING OR CROSS BRIDGING FOR ALL SPANS.
9	TREATED LUMBER SHALL BE AS FOLLOWS: UC3B ABOVE GROUND EXPOSED: BOARDWALK RAILING AND DECKING, TOWER RAILING DECKING FRAMING SINCE ALL OF THIS IS OFF THE GROUND AND WILL NOT CONTACT THE GROUND. UC4A GROUND CONTACT GENERAL USE: BOARDWALK FRAMING UC4B GROUND CONTACT HEAVY DUTY, PIER CAPS AND ABUTMENT SILL PLATE
10	COMPOSITE LUMBER SHALL BE AS FOLLOWS: - COMPOSITE BOARDS SHALL BE SELECTED FROM THE FOLLOWING: - BEDFORED TECHNOLOGIES FIBERFORCE, WORTHINGTON, MN - RENEW PLASTICS TRIMAX STRUCTURAL LUMBER, LUXEMBURG, WI - TANGENT TECHNOLOGIES, LLC, PLASTIC STRUCTURAL LUMBER, AURORA, IL - COMPOSITE BOARDS TO BE IN WEATHERED WOOD COLOR. CONTRACTOR TO SUBMIT SAMPLE FOR REVIEW BY OWHER AND APPROVAL - COMPOSITE BOARDS SHALL BE USED FOR RAILING TOP RAIL.

PETER J. PATON REGISTERED No. 11041
8.22.2018

DATE:	DESCRIPTION:	BY:
7.16.2018	ISSUED FOR BID	PJP

DELAWARE'S BAYSHORE BYWAY
LITTLE CREEK BOARDWALK AND
WILDLIFE OBSERVATION TOWER

STRUCTURAL GENERAL NOTES

DELAWARE DEPARTMENT OF NATURAL RESOURCES AND ENVIRONMENTAL CONTROL

DESIGNED BY: P2STRENG
DRAWN BY: P2STRENG
BUILDING NO.: N/A
DATE: JULY 16, 2018
SCALE:
SHEET NO.: S-2
DFW PROJECT #: FW-2-15
CONTRACT #: FW-2-15

1/20/2017 8:11:33 AM
C:\Users\p2streng\AppData\Local\Temp\Temp1_SampleDrawings.zip\border_cc.dwg

DESIGN LOAD SCHEDULE
(ALL LOADS SHOWN ARE IN POUNDS PER SQ. FT.)

COMPONENT \ AREA	BOARDWALK	OBS. TOWER				
WOOD FRAMING	5	5				
DECKING	5	5				
STEEL & JOIST	.	10				
TOTAL DEAD LOAD	10	20				
TOTAL LIVE LOAD	100	100				
TOTAL LOAD	110	120				

LATERAL LOAD DESIGN SCHEDULE
2015 INTERNATIONAL BUILDING CODE

WIND LOAD			
ITEM	SYMBOL	VALUE	REFERENCE
BASIC ULTIMATE WIND SPEED	$V_{35\text{-}ULT}$	120 mph	FIGURE 1609
BASIC ALLOWABLE WIND SPEED	$V_{35\text{-}ALL}$	90 mph	FIGURE 1609
RISK CATEGORY		III	TABLE 1604.5
WIND EXPOSURE CATEGORY	-	D	SECTION 1609.4
INTERNAL PRESSURE COEFF.	GCPI	—	FIGURE 6-5 (ASCE 7)

SEISMIC LOAD			
ITEM	SYMBOL	VALUE	REFERENCE
SITE CLASS	-	D	SECTION 1615.1.1
MAPPED SPECTRAL RESPONSE ACCELERATION	S_S	0.129	FIGURE 1615(1)
MAPPED SPECTRAL RESPONSE ACCELERATION (1- SECOND RESPONSE)	S_1	0.050	FIGURE 1615(2)
DESIGN SPECTRAL RESPONSE ACCELERATION	S_{DS}	0.138	SECTION 1615.1.3
DESIGN SPECTRAL RESPONSE ACCELERATION (1- SECOND RESPONSE)	S_{D1}	0.080	SECTION 1615.1.3
RISK CATEGORY	-	III	SECTION 1616.2
SEISMIC DESIGN CATEGORY	-	B	TABLE 1616.3
SEISMIC IMPORTANCE FACTOR	I_E	1.25	TABLE 1604.5
DESIGN BASE SHEAR	-	2.5 kips	SECTION 1617.4
ANALYSIS PROCEDURE	-	EQUIVALENT LATERAL FORCE	SECTION 1617
BASIC STRUCTURAL SYSTEM	-	STEEL FRAME SYSTEM	TABLE 1617.6.2
BASIC SEISMIC- FORCE- RESISTING SYSTEM	-	CONCENTRICALLY BRACED FRAME	TABLE 1617.6.2
SEISMIC RESPONSE COEF.	C_S	0.057	TABLE 1617.6.2
RESPONSE MOD. FACTOR	R	3	TABLE 1617.6.2

SNOW LOAD DESIGN SCHEDULE
2015 INTERNATIONAL BUILDING CODE

ITEM	SYMBOL	VALUE	REFERENCE
GROUND SNOW LOAD	P_g	25	FIGURE 1608.2
SNOW EXPOSURE FACTOR	C_e	1.0	TABLE 7.2 (ASCE-7)
SNOW LOAD IMPORTANCE FACTOR	I	1.1	TABLE 7.4 (ASCE-7)
THERMAL FACTOR	C_t	1.2	TABLE 7.3 (ASCE-7)
FLAT-ROOF SNOW LOAD	P_f	25	SECTION 7.3 (ASCE-7)

COLUMN SCHEDULE

MARK	SIZE	BASE PLATE (A36)	A.B. (F1554)	NOTES
SC1	W10X54	1-1/4"x16"x1'-4"	(4) 1"Ø (G50)	
.	.	.	.	
.	.	.	.	
.	.	.	.	

TOWER AND BOARDWALK DECK CONSTRUCTION SCHEDULE

TYPE	SECTION	CONCRETE (UNIT WEIGHT)	DECK	REINFORCING	ADDITIONAL NOTES	DESCRIPTION
S1	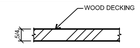		5/4 x 6 SOUTHERN YELLOW PINE WOOD DECKING (PRESSURE TREATED)			SLAB TYPE "DK1": 5/4 x 6 SOUTHERN YELLOW PINE WOOD DECKING (PRESSURE TREATED)

PILE DESIGN LOADS KIPS/PILE (SERVICE)

CONDITION	ABUTMENT	BOARDWALK
VERTICAL PILE - COMPRESSION	8.2	6.5
VERTICAL PILE - TENSION (DUE TO UPLIFT)	--	4.5
BATTERED PILE - TENSION OR COMPRESSION	--	8.9

NOTE:
1. BATTERED PILE LOADS HAVE BEEN RESOLVED TO ACT ALONG THE SHAFT OF THE PILE AT 1V:1H BATTER. LATERAL PILE LOADS ACT AT THE PILE CAP ELEVATION.
2. ALL LOADS SHOWN ARE SERVICE LEVEL LOADS.

PETER J. PAXON REGISTERED No. 11041
8.22.2018

DATE:	DESCRIPTION:	BY:
7.16.2018	ISSUED FOR BID	PJP

DELAWARE'S BAYSHORE BYWAY
LITTLE CREEK BOARDWALK AND WILDLIFE OBSERVATION TOWER

STRUCTURAL SCHEDULES

DELAWARE DEPARTMENT OF NATURAL RESOURCES AND ENVIRONMENTAL CONTROL

DESIGNED BY: P2STRENG
DRAWN BY: P2STRENG
BUILDING NO.: N/A
DATE: JULY 16, 2018
SCALE:
SHEET NO.: S-3
DFW PROJECT #: FW-2-15
CONTRACT #: FW-2-15

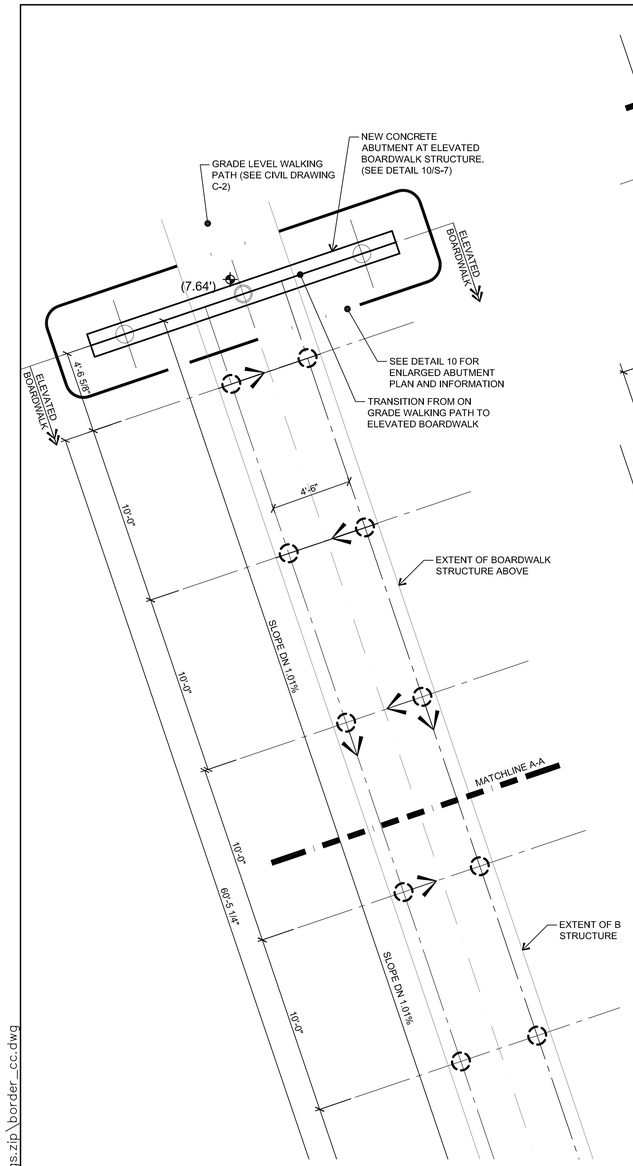

1 Observation Tower Approach Foundation Plan - Segment Base to Matchline A-A

1/4"=1'-0"

NOTES:
1. COORDINATE APPROACH LAYOUT WITH CIVIL DRAWING C-2.
2. ALL PILES SHOWN TO BE HELICAL PILES WITH A CAPACITY AS NOTED ON THE PLANS. PILES SHALL BE OF A GRADE AND FINISH MATERIAL TO REFLECT THE AREA OF USE.
3. ⇐ INDICATES BATTERED PILE IN ADDITION TO VERTICAL PILES (SEE SECTIONS FOR ADD'L INFORMATION)
4. ALL HELICAL PILES TO BE RATED FOR EXTERIOR EXPOSURE.
5. ALL HARDWARE CONNECTING PILES TO WOOD FRAME ABOVE TO BE GALVANIZED.

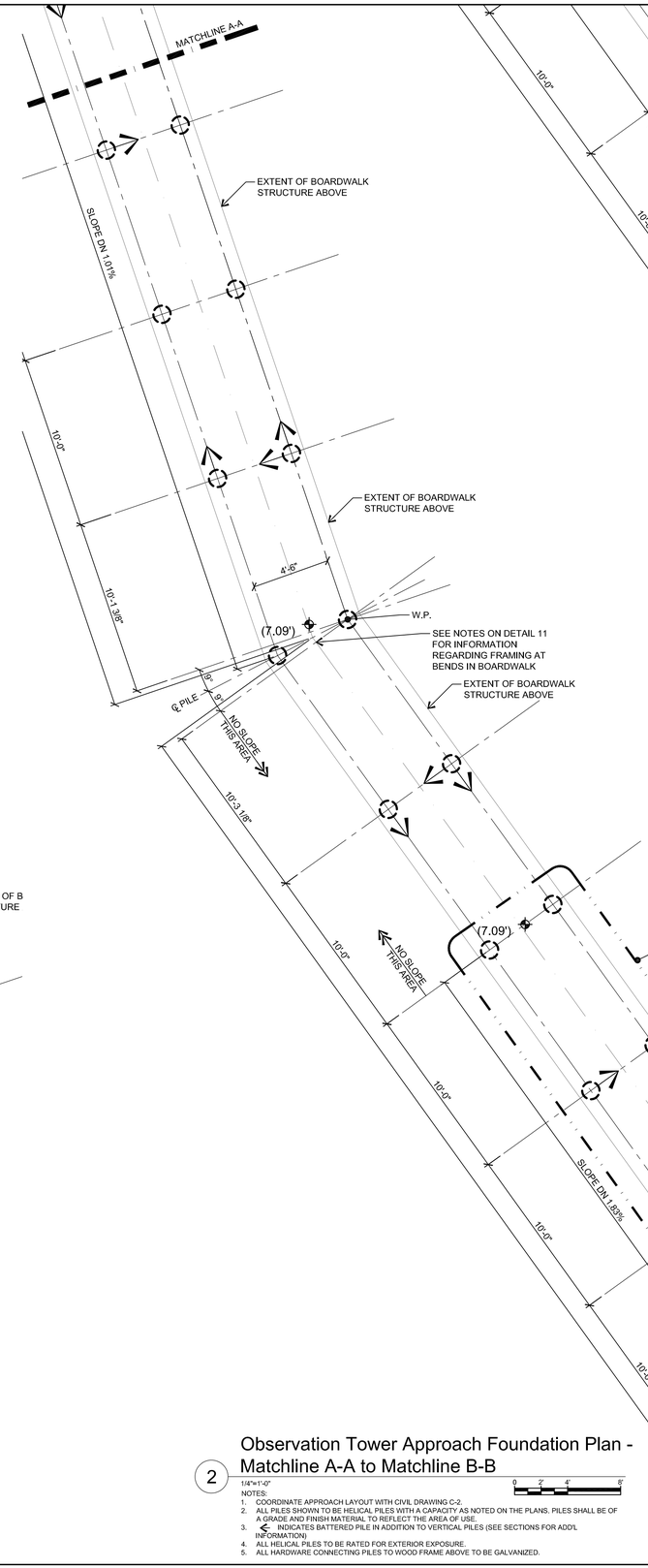

2 Observation Tower Approach Foundation Plan - Matchline A-A to Matchline B-B

1/4"=1'-0"

NOTES:
1. COORDINATE APPROACH LAYOUT WITH CIVIL DRAWING C-2.
2. ALL PILES SHOWN TO BE HELICAL PILES WITH A CAPACITY AS NOTED ON THE PLANS. PILES SHALL BE OF A GRADE AND FINISH MATERIAL TO REFLECT THE AREA OF USE.
3. ⇐ INDICATES BATTERED PILE IN ADDITION TO VERTICAL PILES (SEE SECTIONS FOR ADD'L INFORMATION)
4. ALL HELICAL PILES TO BE RATED FOR EXTERIOR EXPOSURE.
5. ALL HARDWARE CONNECTING PILES TO WOOD FRAME ABOVE TO BE GALVANIZED.

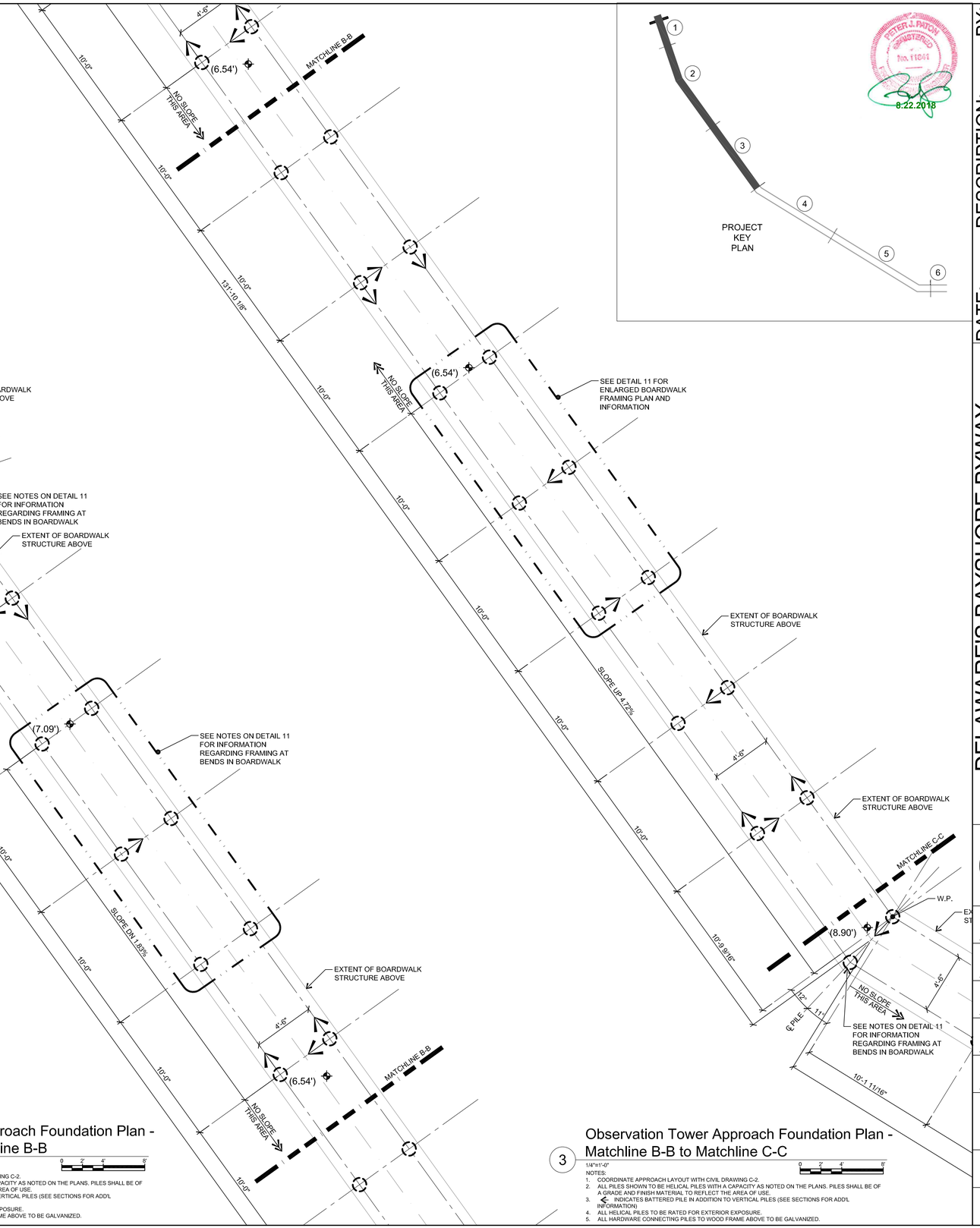

3 Observation Tower Approach Foundation Plan - Matchline B-B to Matchline C-C

1/4"=1'-0"

NOTES:
1. COORDINATE APPROACH LAYOUT WITH CIVIL DRAWING C-2.
2. ALL PILES SHOWN TO BE HELICAL PILES WITH A CAPACITY AS NOTED ON THE PLANS. PILES SHALL BE OF A GRADE AND FINISH MATERIAL TO REFLECT THE AREA OF USE.
3. ⇐ INDICATES BATTERED PILE IN ADDITION TO VERTICAL PILES (SEE SECTIONS FOR ADD'L INFORMATION)
4. ALL HELICAL PILES TO BE RATED FOR EXTERIOR EXPOSURE.
5. ALL HARDWARE CONNECTING PILES TO WOOD FRAME ABOVE TO BE GALVANIZED.

PETER J. PATON REGISTERED No. 11041
8.22.2018

DATE:	DESCRIPTION:	BY:
7.16.2018	ISSUED FOR BID	PJP

DELAWARE'S BAYSHORE BYWAY LITTLE CREEK BOARDWALK AND WILDLIFE OBSERVATION TOWER

BOARDWALK FOUNDATION PLAN SHEET 1

DELAWARE DEPARTMENT OF NATURAL RESOURCES AND ENVIRONMENTAL CONTROL

DESIGNED BY: P2STRENG

DRAWN BY: P2STRENG

BUILDING NO.: N/A

DATE: JULY 16, 2018

SCALE:

SHEET NO.: S-4

DFW PROJECT #: FW-2-15

CONTRACT #: FW-2-15

1/20/2017 8:11:33 AM
C:\Users\p2streng\AppData\Local\Temp\Temp1_SampleDrawings.zip\border_cc.dwg

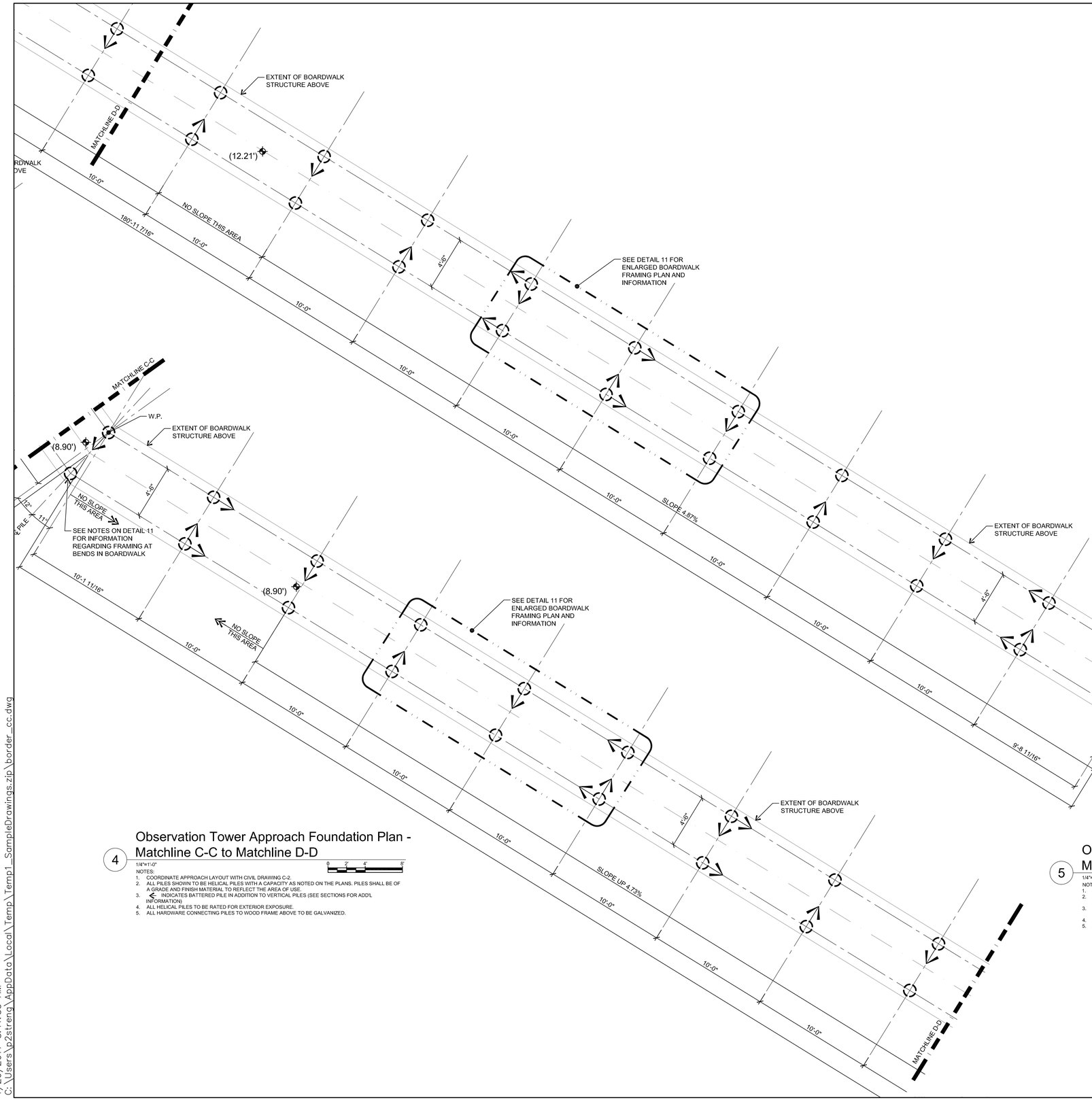

4 Observation Tower Approach Foundation Plan - Matchline C-C to Matchline D-D

1/4"=1'-0"

NOTES:
1. COORDINATE APPROACH LAYOUT WITH CIVIL DRAWING C-2.
2. ALL PILES SHOWN TO BE HELICAL PILES WITH A CAPACITY AS NOTED ON THE PLANS. PILES SHALL BE OF A GRADE AND FINISH MATERIAL TO REFLECT THE AREA OF USE.
3. ⇐ INDICATES BATTERED PILE IN ADDITION TO VERTICAL PILES (SEE SECTIONS FOR ADD'L INFORMATION)
4. ALL HELICAL PILES TO BE RATED FOR EXTERIOR EXPOSURE.
5. ALL HARDWARE CONNECTING PILES TO WOOD FRAME ABOVE TO BE GALVANIZED.

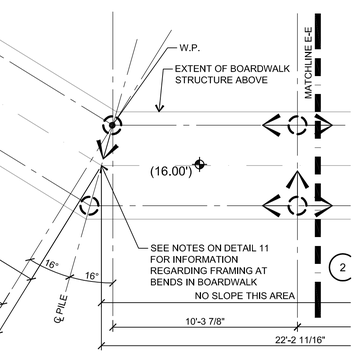

5 Observation Tower Approach Foundation Plan - Matchline D-D to Matchline E-E

1/4"=1'-0"

NOTES:
1. COORDINATE APPROACH LAYOUT WITH CIVIL DRAWING C-2.
2. ALL PILES SHOWN TO BE HELICAL PILES WITH A CAPACITY AS NOTED ON THE PLANS. PILES SHALL BE OF A GRADE AND FINISH MATERIAL TO REFLECT THE AREA OF USE.
3. ⇐ INDICATES BATTERED PILE IN ADDITION TO VERTICAL PILES (SEE SECTIONS FOR ADD'L INFORMATION)
4. ALL HELICAL PILES TO BE RATED FOR EXTERIOR EXPOSURE.
5. ALL HARDWARE CONNECTING PILES TO WOOD FRAME ABOVE TO BE GALVANIZED.

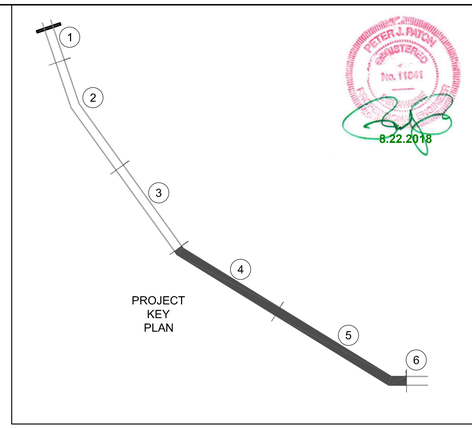

PETER J. PATON REGISTERED No. 11041
8.22.2018

DATE:	DESCRIPTION:	BY:
7.16.2018	ISSUED FOR BID	PJP

DELAWARE'S BAYSHORE BYWAY LITTLE CREEK BOARDWALK AND WILDLIFE OBSERVATION TOWER

BOARDWALK FOUNDATION PLAN SHEET 2

DELAWARE DEPARTMENT OF NATURAL RESOURCES AND ENVIRONMENTAL CONTROL

DESIGNED BY: P2STRENG

DRAWN BY: P2STRENG

BUILDING NO.: N/A

DATE: JULY 16, 2018

SCALE:

SHEET NO.: S-5

DFW PROJECT #: FW-2-15

CONTRACT #: FW-2-15

1/20/2017 8:11:33 AM
C:\Users\p2streng\AppData\Local\Temp\Temp1_SampleDrawings.zip\border_cc.dwg

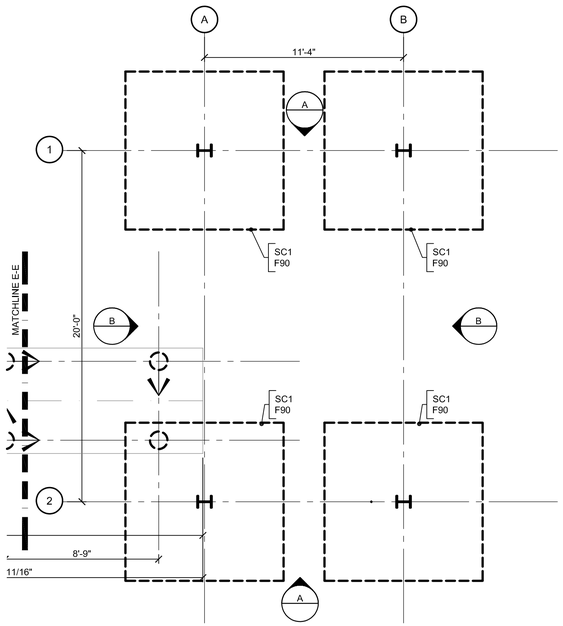

6 Observation Tower Foundation Plan

1/4"=1'-0"

NOTES:
1. TOP OF PILE CAP TO BE (0'-3") ABOVE FINISHED GRADE
2. COORDINATE ALL DIMENSIONS WITH ARCHITECTURAL DRAWINGS PRIOR TO TOWER LAYOUT.
3. SEE ELEVATIONS FOR BRACED FRAME ELEVATIONS AND LOADING INFORMATION.
4. 'F90' INDICATES 9'-0"x9'-0"x39" FOOTING WITH (10) #9 BARS EACH WAY WITH 180deg HOOKS AT EACH END OF BAR.
5. TOP OF FOOTING TO SLOPE AWAY FROM COLUMN BASE. MAX SLOPE = 3" FROM EDGE OF BASE PLATE TO EDGE OF FOOTING.

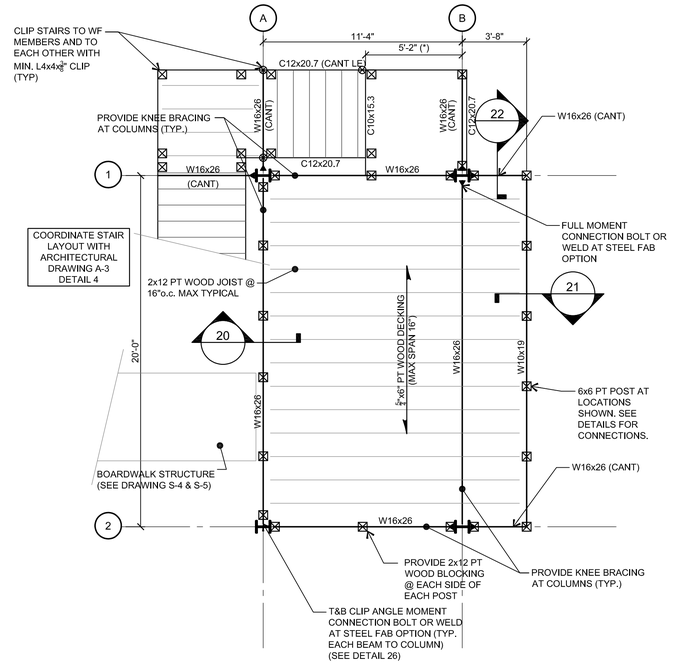

7 Observation Tower First Level Framing Plan

1/4"=1'-0"

NOTES:
1. TOP OF WOOD DECKING TO BE ELEVATOIN (16.00')
2. ALL WOOD JOISTS TO BE PRESSURE TREATED LUMBER.
3. ALL WOOD JOISTS TO BEAR ON TOP OF STEEL BEAMS WITH WOOD PLATE
4. ALL STEEL TO BE ASTM A588 CORTEN 'WEATHERING STEEL'
5. TOP OF STEEL TO BE (-1'-2") BELOW TOP OF DECKING ELEVATION UNLESS NOTED OTHERWISE.
6. COORDINATE ALL DIMENSIONS WITH ARCHITECTURAL DRAWINGS PRIOR TO TOWER LAYOUT.
7. PROVIDE PRESSURE TREATED WOOD PLATE ON ALL STEEL MEMBERS. BOLT WOOD PLATE TO STEEL WITH GALVANIZED ½" DIAMETER BOLTS @ 24"o.c.
8. ALL CONNECTIONS TO BE BOLTED WITH GALVANIZED BOLTS.
9. PROVIDE FULL MOMENT CONNECTION BETWEEN W10 MEMBERS AND COLUMNS IN ALL DIRECTIONS. CONNECTION TO DEVELOP FULL CAPACITY OF THE BEAM FLANGES IN ADDITION TO THE FULL DEPTH SHEAR CONNECTION.
10. PROVIDE 2x12 WOOD BLOCKING AROUND ALL POSTS FOR DECK SUPPORT.
11. "PT" INDICATES PRESSURE TREATED LUMBER
12. SEE ARCH DRAWING A-3 FOR WOOD TREAD AND DECKING INFORMATION.
13. WOOD FRAMING ON STAIRS TO BOLT INTO C12 CHANNEL WITH LEDGER BOARD AND ½"DIA. BOLTS @ 16"o.c.
13. (*) INDICATES DIMENSION TO BE COORDINATED WITH ARCHITECTURAL STAIR LAYOUT ON DRAWING A-1
14. PROVIDE HURRICANE CLIPS BETWEEN ALL JOISTS AND WOOD TOP PLATE

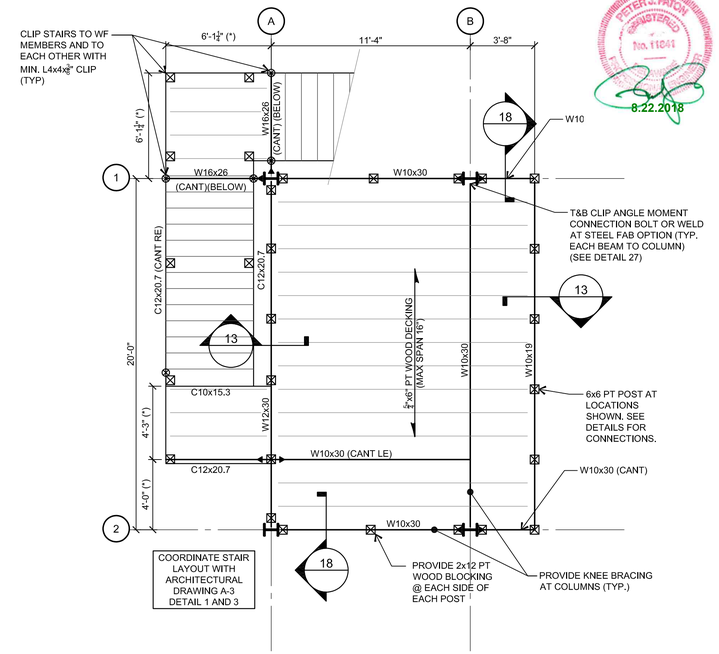

PETER J. PATON REGISTERED No. 11041
8.22.2018

8 Observation Tower Second Level Framing Plan

1/4"=1'-0"

NOTES:
1. TOP OF WOOD DECKING TO BE ELEVATOIN (26.50')
2. ALL WOOD JOISTS TO BE PRESSURE TREATED LUMBER.
3. ALL WOOD JOISTS TO BEAR ON TOP OF STEEL WF BEAMS WITH WOOD PLATE
4. WOOD FRAMING ON STAIRS TO BOLT INTO C12 CHANNEL WITH LEDGER BOARD AND ½"DIA. BOLTS @ 16"o.c.
5. ALL STEEL TO BE ASTM A588 CORTEN 'WEATHERING STEEL'
6. TOP OF STEEL TO BE (-1'-2") BELOW TOP OF DECKING ELEVATION UNLESS NOTED OTHERWISE.
7. COORDINATE ALL DIMENSIONS WITH ARCHITECTURAL DRAWINGS PRIOR TO TOWER LAYOUT.
8. PROVIDE PRESSURE TREATED WOOD PLATE ON ALL STEEL MEMBERS. BOLT WOOD PLATE TO STEEL WITH GALVANIZED ½" DIAMETER BOLTS @ 24"o.c.
9. ALL CONNECTIONS TO BE BOLTED WITH GALVANIZED BOLTS.
10. PROVIDE FULLMOMENT CONNECTION BETWEEN W10 MEMBERS AND COLUMNS IN ALL DIRECTIONS. CONNECTION TO DEVELOP FULL CAPACITY OF THE BEAM FLANGES IN ADDITION TO THE FULL DEPTH SHEAR CONNECTION.
11. PROVIDE TOP FLANGE JOIST HANGERS AT ALL BEAMS AND CHANNELS SUPPORTING 2x MEMBERS.
12. PROVIDE 2x12 WOOD BLOCKING AROUND ALL POSTS FOR DECK SUPPORT.
13. (*) INDICATES DIMENSION TO BE COORDINATED WITH ARCHITECTURAL STAIR LAYOUT ON DRAWING A-1.
14. PROVIDE HURRICANE CLIPS BETWEEN ALL JOISTS AND WOOD TOP PLATE

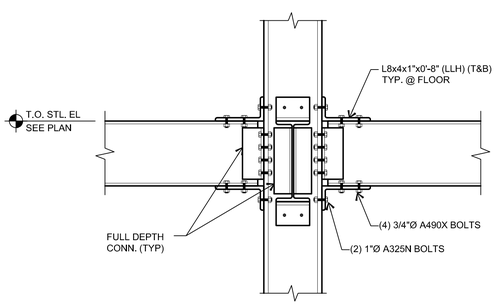

26 Typical First Level Moment Connection

3/4"=1'-0"

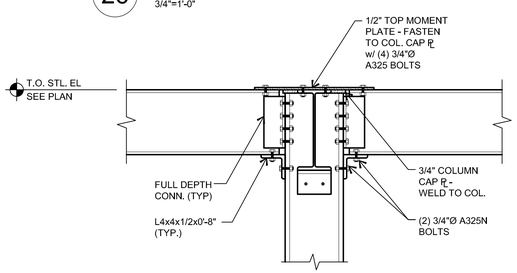

27 Typical Top Level Moment Connection

3/4"=1'-0"

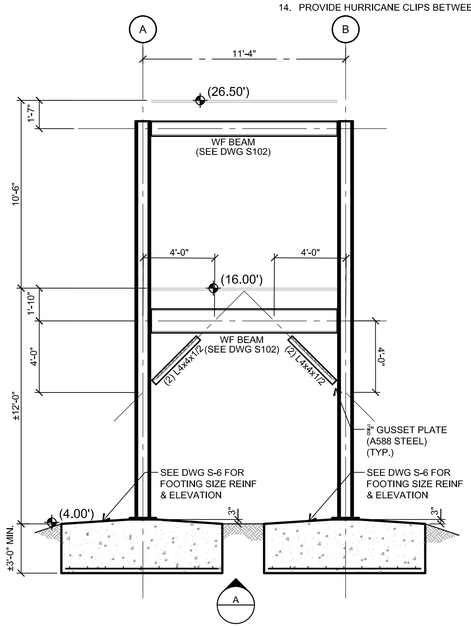

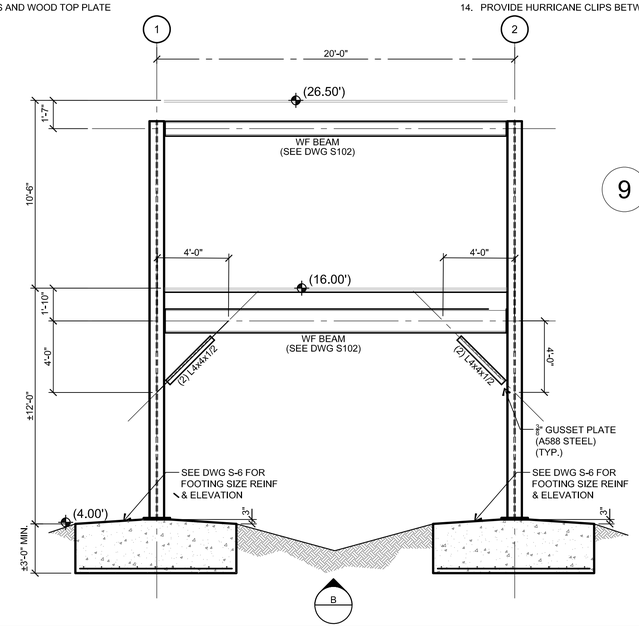

9 Observation Tower Bracing Elevations

1/4"=1'-0"

NOTES:
1. COORDINATE ALL DIMENSIONS WITH PLANS
2. SEE PLAN FOR ALL BEAM AND COLUMN SIZES.
3. ALL KNEE BRACE CONNECTIONS TO BE DESIGNED FOR 15kips TENSION AND/OR COMPRESSION BRACE FORCE IN KIPS. ⅓ STRESS INCREASE IS NOT PERMITTED.
4. ALL BOLTS TO BE SLIP CRITICAL BOLTS UNLESS NOTED OTHERWISE.
5. SEE PLAN FOR COLUMN ORIENTATION
6. ALL STEEL TO BE ASTM A588 WEATHERING STEEL.
7. ALL BOLTS TO BE GALVANIZED TENSION CONTROLLED BOLTS.
8. GRADE TO SLOPE AWAY FROM TOP OF FOUNDATIONS MAX 3:1 SLOPE.

DATE:	DESCRIPTION:	BY:
7.16.2018	ISSUED FOR BID	PJP

DELAWARE'S BAYSHORE BYWAY LITTLE CREEK BOARDWALK AND WILDLIFE OBSERVATION TOWER

OBSERVATION TOWER PLANS

DELAWARE DEPARTMENT OF NATURAL RESOURCES AND ENVIRONMENTAL CONTROL

DESIGNED BY: P2STRENG
DRAWN BY: P2STRENG
BUILDING NO.: N/A
DATE: JULY 16, 2018
SCALE:
SHEET NO.: S-6
DFW PROJECT #: FW-2-15
CONTRACT #: FW-2-15

1/20/2017 8:11:33 AM
C:\Users\p2streng\AppData\Local\Temp\Temp1_SampleDrawings.zip\border_cc.dwg

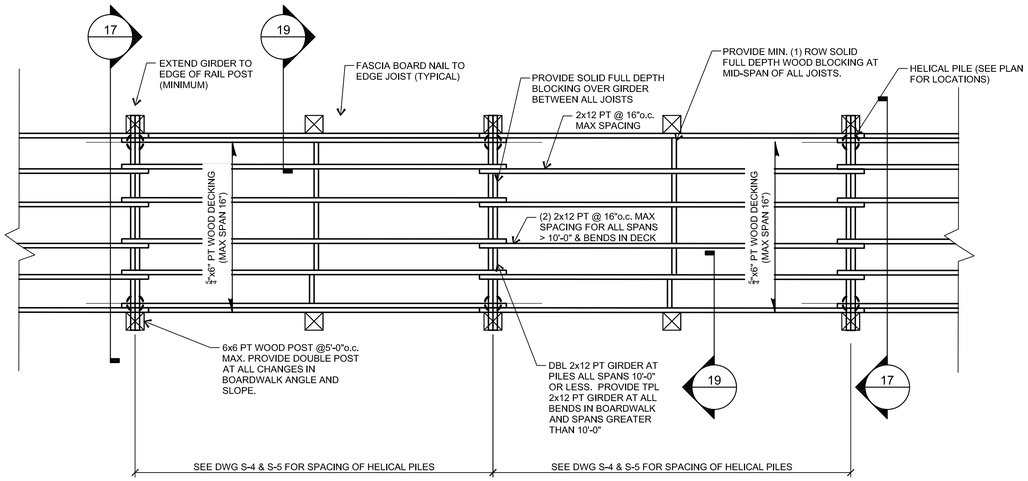

11 Typical Boardwalk Framing Segment

1/2"=1'-0"

NOTES:
1. FOR BENDS IN BOARDWALK AND JOIST SPANS > 10'-0" PROVIDE (3) 2x12 GIRDER @ BEND AND ADJACENT GIRDER
2. PROVIDE DOUBLE JOISTS AT ALL BENDS IN BOARDWALK AND SPANS > 10'-0:

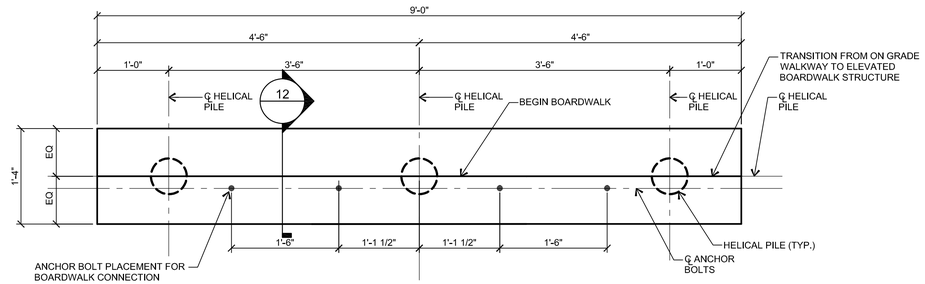

10 Enlarged End Abutment at Approach Boardwalk

1"=1'-0"

0 1' 2'

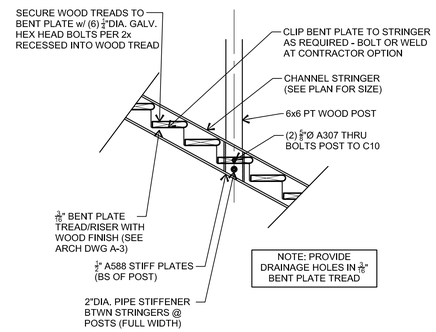

24 Typical Stair Elevation

1/2"=1'-0"

0 1' 2' 4'

NOTES:
1. COORDINATE ALL FINISHES, PROFILES, ETC WITH ARCHITECTURAL DRAWINGS (DRAWING A-3)

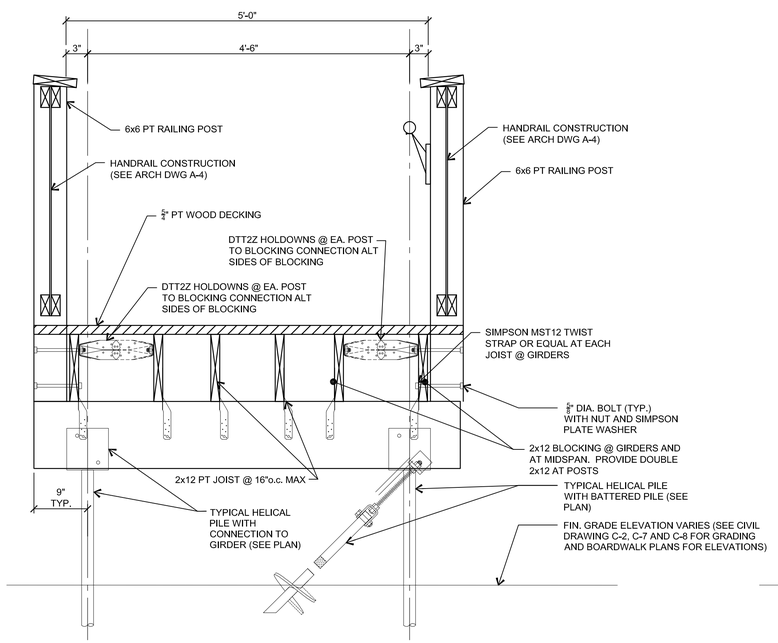

17 Typical Boardwalk Framing Section @ Rail

1"=1'-0"

0 1' 2'

NOTES:
1. COORDINATE ALL RAILING FINISHES, PROFILES, ETC WITH ARCHITECTURAL DRAWINGS (DRAWING A-4)

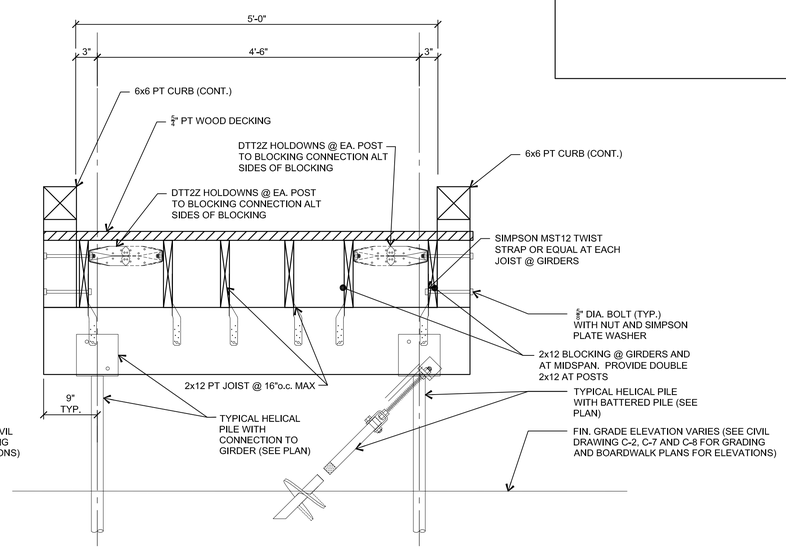

25 Typical Boardwalk Framing Section @ Curb

1"=1'-0"

0 1' 2'

NOTES:
1. COORDINATE ALL RAILING FINISHES, PROFILES, ETC WITH ARCHITECTURAL DRAWINGS (DRAWING A-4)

PETER J. PATON REGISTERED No. 11041
8.22.2018

DATE:	DESCRIPTION:	BY:
7.16.2018	ISSUED FOR BID	PJP

DELAWARE'S BAYSHORE BYWAY
LITTLE CREEK BOARDWALK AND WILDLIFE OBSERVATION TOWER

OBSERVATION TOWER SECTIONS

DELAWARE DEPARTMENT OF NATURAL RESOURCES AND ENVIRONMENTAL CONTROL

DESIGNED BY: P2STRENG
DRAWN BY: P2STRENG
BUILDING NO.: N/A
DATE: JULY 16, 2018
SCALE:
SHEET NO.: S-7
DFW PROJECT #: FW-2-15
CONTRACT #: FW-2-15

1/20/2017 8:11:33 AM
C:\Users\p2streng\AppData\Local\Temp\Temp1_SampleDrawings.zip\border_cc.dwg

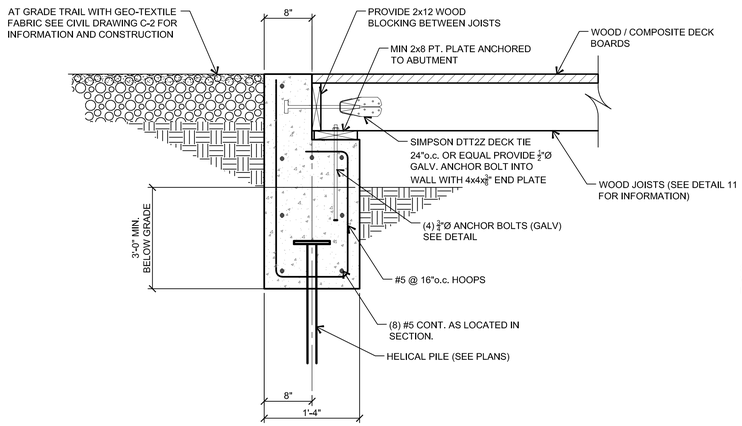

12 Section At Abutment

1"=1'-0"

NOTE:
1. 2x12 JOISTS SHALL BE ATTACHED TO THE 2x8 SILL PLATE WITH SIMPSON HURRICANE CLIP H2.5A OR EQUAL. TOE-NAILING MAY BE USED AS TEMPORARY ATTACHMENT ONLY.

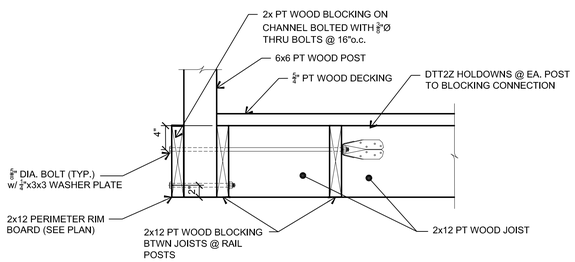

13 Rail Post to Observation Platform Connection

1"=1'-0"

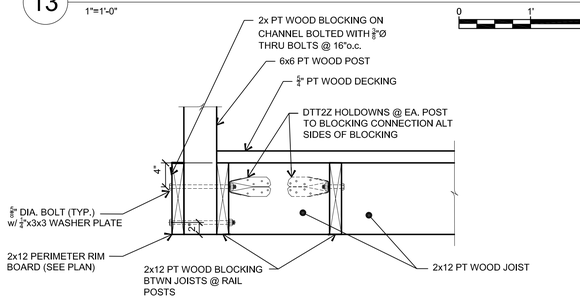

18 Rail Post to Observation Platform Connection

1"=1'-0"

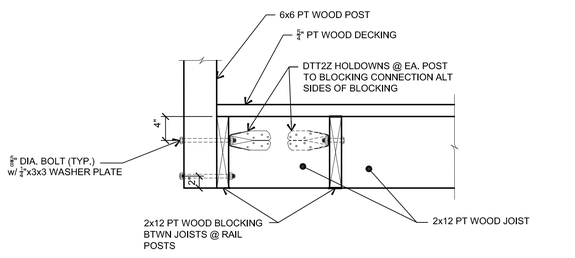

19 Rail Post to Boardwalk Connection - Between Girders

1"=1'-0"

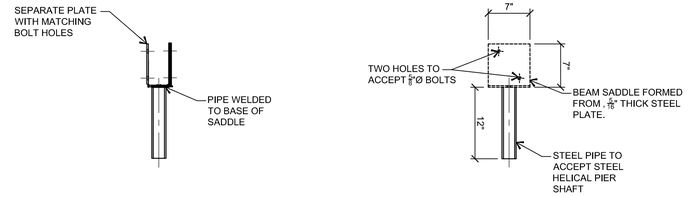

14 Helical Pile Standard Bracket Assembly

1"=1'-0"

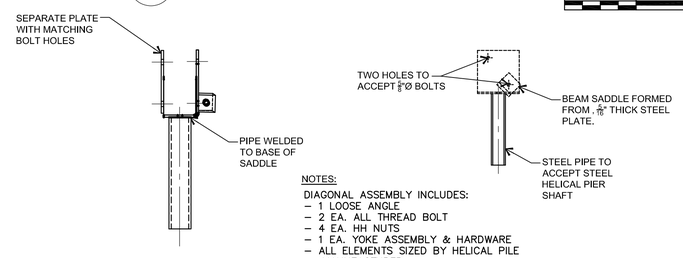

NOTES:
DIAGONAL ASSEMBLY INCLUDES:
- 1 LOOSE ANGLE
- 2 EA. ALL THREAD BOLT
- 4 EA. HH NUTS
- 1 EA. YOKE ASSEMBLY & HARDWARE
- ALL ELEMENTS SIZED BY HELICAL PILE MANUFACTURER

15 Beam Seat @ Diagonal Connection/Joint

1"=1'-0"

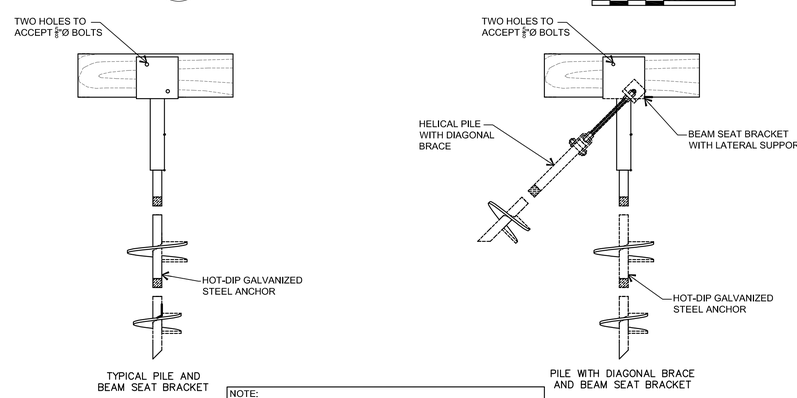

NOTE:
BRACKET DETAILS ARE SCHEMATIC IN NATURE. THE CONTRACTOR IS RESPONSIBLE FOR THE CONNECTION FROM THE PILE CAP TO THE PILES. SEE THE HELICAL ANCHOR SPECIAL PROVISION FOR DETAILS

16 Beam Seat @ Bracing Connection/Joint

1"=1'-0"

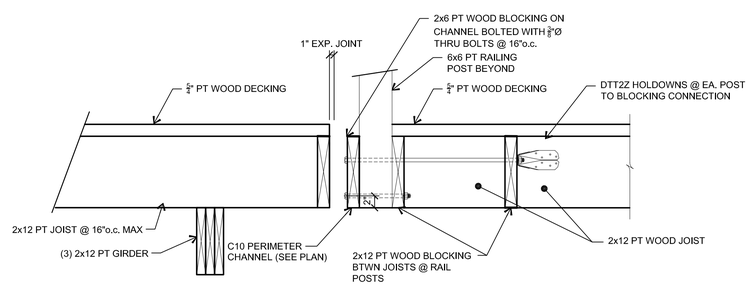

20 Boardwalk to Observation Tower Section

1"=1'-0"

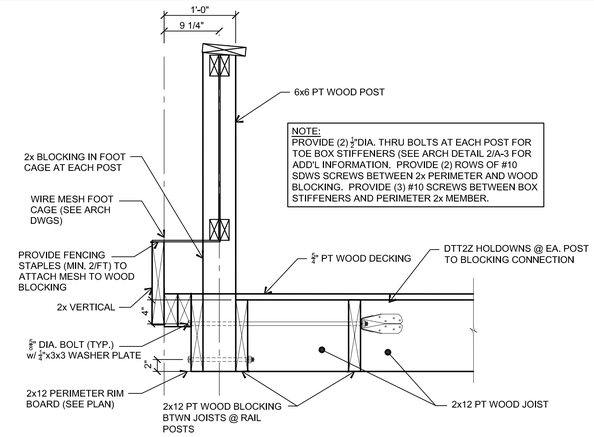

21 ADA Rail Post to Observation Platform Connection

1"=1'-0"

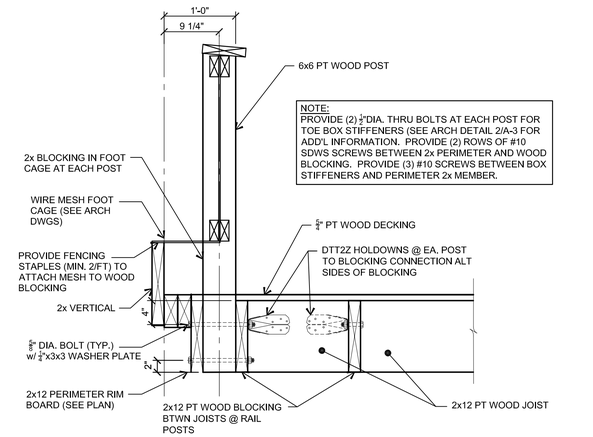

22 ADA Rail Post to Observation Platform Connection

1"=1'-0"

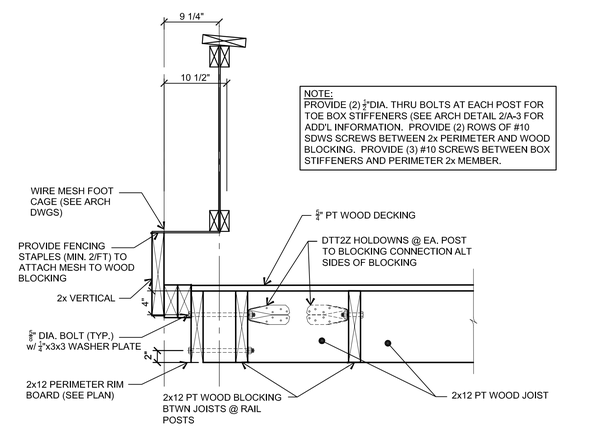

23 ADA Rail Observation Platform Btwn Posts

1"=1'-0"

PETER J. PAYON REGISTERED No. 11041
8.22.2018

DATE:	DESCRIPTION:	BY:
7.16.2018	ISSUED FOR BID	PJP

DELAWARE'S BAYSHORE BYWAY LITTLE CREEK BOARDWALK AND WILDLIFE OBSERVATION TOWER

OBSERVATION TOWER SECTIONS AND DETAILS

DELAWARE DEPARTMENT OF NATURAL RESOURCES AND ENVIRONMENTAL CONTROL

DESIGNED BY: P2STRENG
DRAWN BY: P2STRENG
BUILDING NO.: N/A
DATE: JULY 16, 2018
SCALE:
SHEET NO.: S-8
DFW PROJECT #: FW-2-15
CONTRACT #: FW-2-15

1/20/2017 8:11:33 AM
C:\Users\p2streng\AppData\Local\Temp\Temp1_SampleDrawings.zip\border_cc.dwg

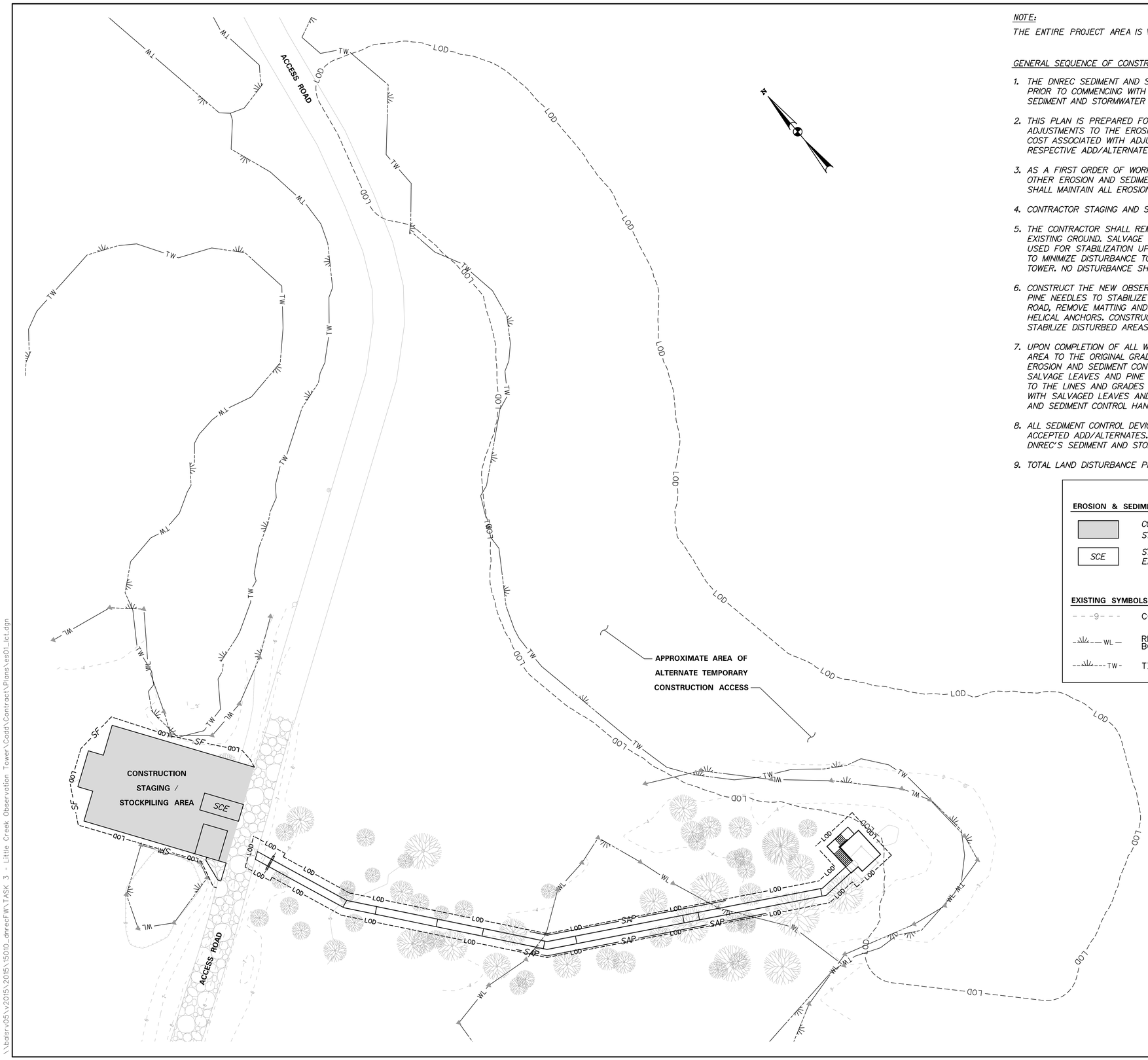

NOTE:

THE ENTIRE PROJECT AREA IS WITHIN THE FEMA 100-YEAR FLOODPLAIN.

GENERAL SEQUENCE OF CONSTRUCTION:

1. THE DNREC SEDIMENT AND STORMWATER MANAGEMENT PROGRAM MUST BE NOTIFIED IN WRITING FIVE (5) DAYS PRIOR TO COMMENCING WITH CONSTRUCTION. FAILURE TO DO SO CONSTITUTES A VIOLATION OF THE APPROVED SEDIMENT AND STORMWATER MANAGEMENT PLAN.
2. THIS PLAN IS PREPARED FOR THE BASE BID. IF THE OWNER ACCEPTS ONE OR MORE OF THE ADD/ALTERNATES ADJUSTMENTS TO THE EROSION AND SEDIMENT CONTROL DEVICE SHALL BE AS DIRECTED BY THE OWNER. ANY COST ASSOCIATED WITH ADJUSTMENTS TO/OR ADDITIONAL DEVICES SHALL BE INCLUDED IN THE BID FOR THE RESPECTIVE ADD/ALTERNATE.
3. AS A FIRST ORDER OF WORK, THE CONTRACTOR SHALL INSTALL STABILIZED CONSTRUCTION ENTRANCE, AND ALL OTHER EROSION AND SEDIMENT CONTROL DEVICES REQUIRED TO CONSTRUCT THE BASE BID. THE CONTRACTOR SHALL MAINTAIN ALL EROSION AND SEDIMENT CONTROL DEVICES PREVIOUSLY INSTALLED BY THE OWNER.
4. CONTRACTOR STAGING AND STOCKPILE AREA IS ON GRAVEL.
5. THE CONTRACTOR SHALL REMOVE THE EXISTING BOARDWALK. EXISTING PILES SHALL BE CUT FLUSH WITH THE EXISTING GROUND. SALVAGE EXISTING LEAVES AND PINE NEEDLES AND PLACE IN THE STOCKPILE AREA TO BE USED FOR STABILIZATION UPON COMPLETION OF THE BOARDWALK AND TOWER. PLACE PROTECTIVE MATTING AS TO MINIMIZE DISTURBANCE TO THE EXISTING GROUND SURFACE DURING CONSTRUCTION. DISMANTLE THE EXISTING TOWER. NO DISTURBANCE SHALL BE ALLOWED OUTSIDE THE LOD.
6. CONSTRUCT THE NEW OBSERVATION TOWER. UPON COMPLETION OF THE TOWER, UTILIZE SALVAGED LEAVES AND PINE NEEDLES TO STABILIZE THE AREA ADJACENT TO THE TOWER. WORKING FROM THE TOWER BACK TO THE ROAD, REMOVE MATTING AND CONSTRUCT BOARDWALK. REMOVE ONLY THE EXISTING PILES IN CONFLICT WITH HELICAL ANCHORS. CONSTRUCT THE BOARDWALK ABUTMENT AND COMPLETE THE BOARDWALK AND TRAIL. STABILIZE DISTURBED AREAS WITH SALVAGED LEAVES.
7. UPON COMPLETION OF ALL WORK, THE CONTRACTOR SHALL RESTORE THE CONSTRUCTION STAGING/STOCKPILE AREA TO THE ORIGINAL GRADES, AND STABILIZE IN ACCORDANCE WITH THE PLANS AND THE DELAWARE EROSION AND SEDIMENT CONTROL HANDBOOK, CURRENT EDITION. IF ADD/ALTERNATE NO.2 IS ACCEPTED, SALVAGE LEAVES AND PINE NEEDLES. CLEAR AND GRUB TACKBOARD AREA TO THE LOD. INSTALL STONE TO THE LINES AND GRADES AS SHOWN ON PLANS. INSTALL TACKBOARD CABINET. STABILIZE DISTURBED AREA WITH SALVAGED LEAVES AND PINE NEEDLES, IN ACCORDANCE WITH THE PLANS AND THE DELAWARE EROSION AND SEDIMENT CONTROL HANDBOOK, CURRENT EDITION.
8. ALL SEDIMENT CONTROL DEVICES SHALL REMAIN IN PLACE UPON COMPLETION OF THE BASE BID AND ANY ACCEPTED ADD/ALTERNATES. THE OWNER SHALL REMOVE ALL SEDIMENT CONTROL DEVICES AFTER APPROVAL BY DNREC'S SEDIMENT AND STORMWATER PROGRAM.
9. TOTAL LAND DISTURBANCE PROPOSED BY THIS PLAN IS 35,166 SQUARE FEET.

LEGEND

EROSION & SEDIMENT CONTROL DEVICES

	CONSTRUCTION STAGING/ STOCKPILE AREA	—SF—	SILT FENCE
SCE	STABILIZED CONSTRUCTION ENTRANCE	—SAP—	SENSITIVE AREA PROTECTION
		--LOD--	LIMIT OF DISTURBANCE

EXISTING SYMBOLS

--9--	CONTOUR LINE		CONIFEROUS TREE 6" AND LARGER
—WL—	RK&K DELINEATED WETLAND BOUNDARY		DECIDUOUS TREE 6" AND LARGER
--TW--	TIDAL WETLAND LINE		GRAVEL

OWNER'S CERTIFICATION

I, _____, HEREBY CERTIFY THAT ALL LAND CLEARING, CONSTRUCTION AND DEVELOPMENT SHALL BE PURSUANT TO THE APPROVED PLAN AND RESPONSIBLE PERSONS INVOLVED WILL HAVE A CERTIFICATE OF TRAINING FROM THE DEPARTMENT OF NATURAL RESOURCES (DNREC). DNREC PERSONNEL SHALL HAVE THE RIGHT TO CONDUCT ON-SITE INSPECTIONS.

DATE _____ SIGNATURE _____

SCALE
0 30 60 90
FEET

NANCY RUTH BERENDT
LICENSED
PROFESSIONAL ENGINEER
DELAWARE

DATE:	DESCRIPTION:	BY:
7/16/18	ISSUED FOR BID	

DELAWARE BAYSHORE BYWAY
LITTLE CREEK BOARDWALK AND
WILDLIFE OBSERVATION TOWER

EROSION AND SEDIMENT CONTROL PLAN

DELAWARE DEPARTMENT OF NATURAL RESOURCES AND ENVIRONMENTAL CONTROL

DESIGNED BY: RKK
DRAWN BY: RKK
BUILDING NO.: N/A
DATE: JULY 16, 2018
SCALE: 1" = 30'
SHEET NO.: ES-1
DFW PROJECT #: FW-2-15
CONTRACT #: FW-2-15

11/5/2018 3:27:14 PM
\\balsrv05\v2015\2015\15010_dnrecFW\TASK 3 - Little Creek Observation Tower\Cadd\Contract\Plans\es01_lct.dgn

Standard Detail & Specifications
Silt Fence

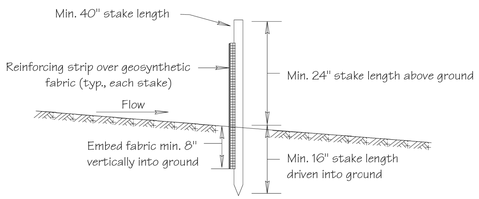

Section

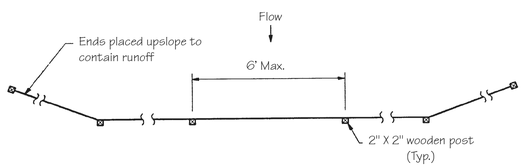

Plan

DATA
Max. controlled slope

Source:	Symbol:	Detail No.
Adapted form MD Stds. & Specs. for ESC	SF	DE-ESC-3.1.2.1 Sheet 1 of 2

Effective April 2016

Standard Detail & Specifications
Silt Fence

Construction Detail

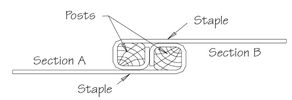

Top

Method for joining continuous sections

Construction Notes:

1. Geosynthetic fabric to be fastened securely to fence posts with wire ties or staples.
2. When two sections of filter cloth adjoin each other they shall be overlapped by six inches and folded.
3. Maintenance shall be performed as needed and material removed when "bulges" develop in the silt fence.

Materials:

1. Stakes: Steel (either T or U) or 2" x 2" hardwood
2. Geosynthetic Fabric: Type GD-I
3. Reinforcing strip: Wooden lath, plastic strip or other approved equivalent
4. Prefabricated Unit: Geofab, Envirofence, or approved equivalent

Source:	Symbol:	Detail No.
Adapted from MD Stds. & Specs. for ESC	SF	DE-ESC-3.1.2.1 Sheet 2 of 2

Effective April 2016

Standard Detail & Specifications
Stabilized Construct. Entrance

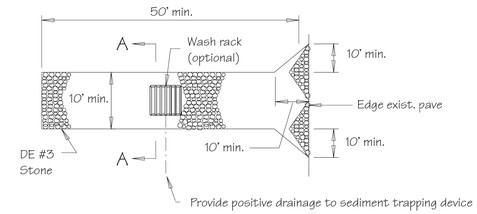

Plan

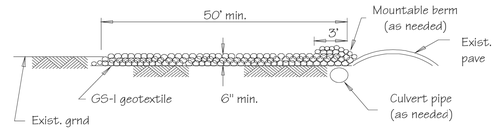

Profile

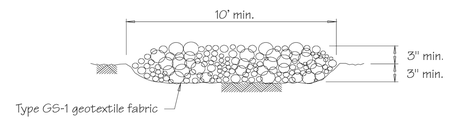

Section A-A (Std.)

Source:	Symbol:	Detail No.
Adapted from VA ESC Handbook	SCE	DE-ESC-3.4.7 Sheet 1 of 2

Effective April 2016

Standard Detail & Specifications
Stabilized Construct. Entrance

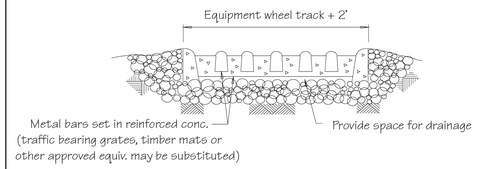

Section A-A (Opt.)

Construction Notes:

1. Stone size - Use DE #3 stone.
2. Length - As required, but not less than 50 feet (except on a single residence lot where a 30 foot minimum length would apply).
3. Thickness - Not less than size (6) inches.
4. Width - Ten (10) foot minimum, but not less than the full width at points where ingress or egress occurs.
5. Geotextile - Type GS-I; placed over the entire area prior to placing of stone.
6. Surface Water - All surface water flowing or diverted toward construction entrances shall be piped across the entrance. If piping is impractical, a mountable berm with 5:1 slopes will be permitted.
7. Maintenance - The entrance shall be maintained in a condition which will prevent tracking or flowing of sediment onto public rights-of-way. This may require periodic top dressing with additional stone as conditions demand and repair and/or cleanout of any measures used to trap sediment. All sediment spilled, dropped, washed or tracked onto public rights-of-way must be removed immediately.
8. Washing - Vehicle wheels shall be cleaned to remove sediment prior to entrance onto public rights-of-way. When washing is required, it shall be done on an area stabilized with stone and which drains into an approved sediment trapping device.
9. Inspection - Periodic inspection and needed maintenance shall be provided after each rain.

Source:	Symbol:	Detail No.
Adapted from VA ESC Handbook	SCE	DE-ESC-3.4.7 Sheet 2 of 2

Effective April 2016

Standard Detail & Specifications
Dust Control

Temporary Methods:

1. Mulches - See **DE-ESC-3.4.5**, Standard Detail and Specifications for Mulching.
2. Vegetative cover - See **DE-ESC-3.4.3**, Std. Detail and Specifications for Vegetative Stabilization.
3. Adhesives - Use on mineral soils only (not effective on muck soils). Keep traffic off these areas. The following table may be used for general guidance.

Type of Emulsion	Water Dilution	Type of Nozzle	Apply Gal/Ac.
Latex emulsion	12.5:1	Fine spray	235
Resin-in-water emulsion	4.1	Fine spray	300
Acrylic emulsion (non-trafffic)	7:1	Coarse spray	450
Acrylic emulsion (traffic)	3.5:1	Coarse spray	350

4. Tillage - For emergency temporary treatment, scarify the soil surface to prevent or reduce the amount of blowing dust until a more appropriate solution can be implemented. Begin the tillage operation on the windward side of the site using a chisel-type plow for best results.
5. Sprinkling - Sprinkle site with water until the surface is moist . Repeat as needed.
6. Calcium Chloride - Apply as flakes or granular material with a spreader at a rate that will keep the soil surface moist. Re-apply as necessary.
7. Barriers - Place barriers such as soild board fences, snow fences, hay bales, etc. at right angles to the prevailing air currents at intervals of approx. 10X their height.

Permanent Methods:

1. Vegetative cover - See **DE-ESC-3.4.3**, Std. Detail and Specifications for Vegetative Stabilization.
2. Stone - Apply layer of crushed stone or coarse gravel to protect soil surface.

Source:	Symbol:	Detail No.
Adapted from VA ESC Handbook		DE-ESC-3.4.8 Sheet 1 of 1

Effective April 2016

Standard Detail & Specifications
Sensitive Area Protection

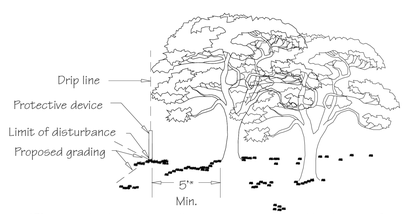

*5' min. setback applies to all sensitve areas covered by this specification.

Location of Sensitive Area Protection

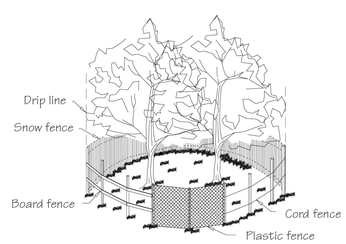

Methods of Sensitive Area Protection

Source:	Symbol:	Detail No.
Adapted from VA ESC Handbook	SAP	DE-ESC-3.7.2 Sheet 1 of 3

Effective April 2016

Standard Detail & Specifications
Sensitive Area Protection

Construction Notes:

Fencing shall be installed at the extents of all sensitive areas. For trees, the fencing shall be installed outside the dripline (mature canopy) and at no time within 5 feet of the trunk. Personnel must be instructed to honor protective devices. The devices described are suggested only, and are not intended to exclude the use of other devices which will protect the trees to be retained. If silt fence is to be used for demarcation purposes, appropriate signage shall be provided a minimum of every 20 feet denoting the area as a sensitive area protection zone.

Materials:

1. Snow Fence - Standard 40-inch high snow fence shall be placed at the limits of clearing or construction on standard steel posts set 6 feet apart.
2. Board Fence - Board fencing consisting of 4-inch square posts set securely in the ground and protruding at least 4 feet above the ground shall be placed at the limits of clearing with a minimum of two horizontal boards between posts. For tree proteciton, if it is not practical to erect a fence at the drip line, construct a triangular fence nearer the trunk. The limits of clearing will still be located at the drip line, since the root zone within the drip line will still require protection.
3. Plastic Fencing - 40-inch high "international orange" plastic (polyethylene) web fencing secured to conventional metal "T" or "U" posts driven to a minimum depth of 18 inches on 6-foot minimum centers shall be installed at the limits of clearing. The fence should have the following minimum physical qualities:
   a. Tensile yield: Average 2,000 lbs. per 4-foot width (ASTM D638)
   b. Ultimate tensile yield: Average 2,900 lbs. per 4-foot width (ASTM D638)
   c. Elongation at break (%): Greater than 1000% (ASTM D638)
   d. Chemical resistance: Inert to most chemicals and acids

Source:	Symbol:	Detail No.
Adapted from VA ESC Handbook	SAP	DE-ESC-3.7.2 Sheet 2 of 3

Effective April 2016

Standard Detail & Specifications
Sensitive Area Protection

4. Cord Fence - Posts with a minimum size of 2 inches square or 2 inches in diameter set securely in the ground and protruding at least 4 feet above the ground shall be placed at the limits of clearing with two rows of cord 1/4-inch or thicker at least 2 feet apart running between posts with strips of colored surveyor's flagging tied securely to the string at intervals no greater than 3 feet.
5. Earth Berms - Temporary earth berms shall be constructed according to specifications for a Temporary Earth Dike with the base of the berm on the sensitive area side located along the limits of clearing. Earth berms may not be used for this purpose if their presence will conflict with drainage patterns.
6. Trunk Armoring (Tree Protection Only) - As a last resort, a tree trunk can be armored with burlap wrapping and 2-inch studs wired vertically no more than 2 inches apart to a height of 5 feet encircling the trunk. If this alternative is used, the root zone within the drip line will still require protection. Nothing should ever be nailed to a tree.

Maintenance:

Fencing and armoring devices shall be in place before any excavation or grading is begun, shall be kept in good repair for the duration of construction activities, and shall be the last items removed during the final cleanup after the completion of the project.

Source:	Symbol:	Detail No.
Adapted from VA ESC Handbook	SAP	DE-ESC-3.7.2 Sheet 3 of 3

Effective April 2016

DATE:	DESCRIPTION:	BY:
7/16/18	ISSUED FOR BID	

DELAWARE BAYSHORE BYWAY
LITTLE CREEK BOARDWALK AND WILDLIFE OBSERVATION TOWER

EROSION AND SEDIMENT CONTROL DETAILS

DELAWARE DEPARTMENT OF NATURAL RESOURCES AND ENVIRONMENTAL CONTROL

DESIGNED BY: RKK
DRAWN BY: RKK
BUILDING NO.: N/A
DATE: JULY 16, 2018
SCALE: NOT TO SCALE
SHEET NO.: ES-2
DFW PROJECT #: FW-2-15
CONTRACT #: FW-2-15

NANCY RUTH BERGERON LICENSED DELAWARE PROFESSIONAL ENGINEER

7/16/2018 12:59:56 PM
\\bolsrv05\v2015\2015\15010_dnrecF W\TASK 3 - Little Creek Observation Tower\Cadd\Contract\Plans\es02_lct.dgn

Standard Detail & Specifications

Construction Site Waste Mgt & Spill Control

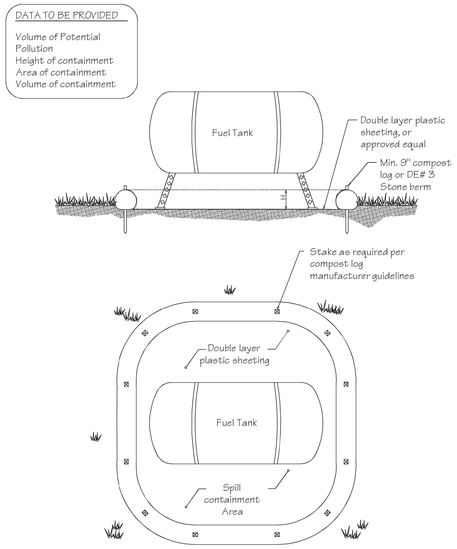

Source:	Symbol:	Detail No.
Delaware ESC Handbook		**DE-ESC-3.6.1** Sheet 1 of 5

Effective April 2016

Standard Detail & Specifications

Construction Site Waste Mgt & Spill Control

Pollution Prevention – Spill Prevention

1. Fueling should only take place in signed designated areas, away from downstream drainage facilities and watercourses.
2. Fueling must be with nozzles equipped with automatic shut-off to control drips. Do not top off.
3. Protect the areas where equipment or vehicles are being repaired, maintained, fueled or parked from storm water run-on and runoff.
4. Use barriers such as berms to prevent storm water run-on and runoff, and to contain spills.
5. Place a "Fueling Area" sign next to each fueling area.
6. Store hazardous materials such as fuel, solvents, oil and chemicals in secondary containment.
7. Inspect vehicles and equipment for leaks on each day of use. Repair fluid and oil leaks immediately.
8. Absorbent spill clean-up materials and spill kits must be available in fueling areas and on fuel trucks.
9. If fueling is to take place at night, make sure the fueling area is sufficiently illuminated.
10. Properly dispose of used oil, fluids, lubricants and spill clean-up materials.

CLEAN UP SPILLS

1. If it is safe to do so, immediately contain and clean up any chemical and/or hazardous material spills.
2. Properly dispose of used oil, fluids, lubricants and spill clean-up materials.
3. Do not bury spills or wash them down with water.

LEAKS AND DRIPS

1. Use drip pans or absorbent pads at all times. Place under and around leaky equipment.
2. Do not allow oil, grease, fuel or chemicals to drip onto the ground.
3. Have spill kits and clean up material on-site.
4. Repair leaky equipment promptly or remove problem vehicles and equipment from the site. Clean up contaminated soil immediately.
5. Store contaminated waste in sealed containers constructed of suitable material. Label these containers properly.
6. Clean up all spills and leaks. Promptly dispose of waste and spent clean up materials.

Source:	Symbol:	Detail No.
Delaware ESC Handbook		**DE-ESC-3.6.1** Sheet 2 of 5

Effective April 2016

Standard Detail & Specifications

Construction Site Waste Mgt & Spill Control

Notes:

The Construction Site Pollution Prevention Plan should include the following elements:

1. Material Inventory

Document the storage and use of the following materials:

a. Concrete
b. Detergents
c. Paints (enamel and latex)
d. Cleaning solvents
e. Pesticides
f. Wood scraps
g. Fertilizers
h. Petroleum based products

2. Good housekeeping practices

a. Store only enough product required to do the job.
b. All materials shall be stored in a neat, orderly manner in their original labeled containers and covered.
c. Substances shall not be mixed.
d. When possible, all of a product shall be used up prior to disposal of the container.
e. Manufacturers' instructions for disposal shall be strictly adhered to.
f. The site foreman shall designate someone to inspect all BMPs daily.

3. Waste management practices

a. All waste materials shall be collected and stored in securely lidded dumpsters in a location that does not drain to a waterbody.
b. Waste materials shall be salvaged and/or recycled whenever possible.
c. The dumpsters shall be emptied a minimum of twice per week, or more if necessary. The licensed trash hauler is responsible for cleaning out dumpsters.

Source:	Symbol:	Detail No.
Adapted from USEPA Pub. 840-B-92-002		**DE-ESC-3.6.1** Sheet 3 of 5

Effective April 2016

Standard Detail & Specifications

Construction Site Waste Mgt & Spill Control

Notes (cont.)

d. Trash shall be disposed of in accordance with all applicable Delaware laws.
e. Trash cans shall be placed at all lunch spots and littering is strictly prohibited. Recycle bins shall be placed near the construction trailer.
f. If fertilizer bags can not be stored in a weather-proof location, they shall be kept on a pallet and covered with plastic sheeting which is overlapped and anchored.

4. Equipment maintenance practices

a. If possible, equipment should be taken to off-site commercial facilities for washing and maintenance.
b. If performed on-site, vehicles shall be washed with high-pressure water spray without detergents in an area contained by an impervious berm.
c. Drip pans shall be used for all equipment maintenance.
d. Equipment shall be inspected for leaks on a daily basis.
e. Washout from concrete trucks shall be disposed of in a temporary pit for hardening and proper disposal.
f. Fuel nozzles shall be equipped with automatic shut-off valves.
g. All used products such as oil, antifreeze, solvents and tires shall be disposed of in accordance with manufacturers' recommendations and local, state and federal laws and regulations.

5. Spill prevention practices

a. Potential spill areas shall be identified and contained in covered areas with no connection to the storm drain system.
b. Warning signs shall be posted in hazardous material storage areas.
c. Preventive maintenance shall be performed on all tanks, valves, pumps, pipes and other equipment as necessary.
d. Low or non-toxic substances shall be prioritized for use.

Source:	Symbol:	Detail No.
Adapted from USEPA Pub. 840-B-92-002		**DE-ESC-3.6.1** Sheet 4 of 5

Effective April 2016

Standard Detail & Specifications

Construction Site Waste Mgt & Spill Control

Notes (cont.)

e. Contact information for reporting spills through the DNREC 24-Hour Toll Free Number shall be prominently posted.

6. Education

a. Best management practices for construction site pollution control shall be a part of regular progress meetings.
b. Information regarding waste management, equipment maintenance and spill prevention shall be prominently posted in the construction trailer.

CONTACT INFORMATION

DNREC 24-Hour Toll Free Number	**800-662-8802**
DNREC Solid & Hazardous Waste Branch	**302-739-9403**

Source:	Symbol:	Detail No.
Adapted from USEPA Pub. 840-B-92-002		**DE-ESC-3.6.1** Sheet 5 of 5

Effective April 2016

DATE:	DESCRIPTION:	BY:
7/16/18	ISSUED FOR BID	

DELAWARE BAYSHORE BYWAY
LITTLE CREEK BOARDWALK AND WILDLIFE OBSERVATION TOWER

EROSION AND SEDIMENT CONTROL DETAILS

DELAWARE DEPARTMENT OF NATURAL RESOURCES AND ENVIRONMENTAL CONTROL

DESIGNED BY: RKK
DRAWN BY: RKK
BUILDING NO.: N/A
DATE: JULY 16, 2018
SCALE: NOT TO SCALE
SHEET NO.: ES-3
DFW PROJECT #: FW-2-15
CONTRACT #: FW-2-15

NAOMI RUTH BERGER LICENSED PROFESSIONAL ENGINEER DELAWARE

7/16/2018 1:05:10 PM
\\balsrv05\v2015\2015\15010_dnrecFW\TASK 3 - Little Creek Observation Tower\Cadd\Contract\Plans\es03_lct.dgn