PROJECT MANUAL

TRI-VALLEY TRAIL, PHASE II
at
WHITE CLAY CREEK STATE PARK

SMITH MILL ROAD
NEWARK, DELAWARE 19711

for

Department of Natural Resources and Environmental Control

Division of Parks and Recreation

89 Kings Highway
Dover, DE 19901

DNREC Project: WCCSP-07A

NOT FOR BID

Architect/Engineer
Century Engineering, Inc.
4134 North DuPont Hwy.
Dover, DE 19901

Final Construction Plans
JUNE 2018

(THIS PAGE INTENTIONALLY LEFT BLANK)

NOT FOR BID

Specifications for this project are arranged in accordance with the Construction Specification Institute numbering system and format. Section numbering is discontinuous and all numbers not appearing in the Table of Contents are not used for this Project.

DOCUMENTS BOUND HEREWITH

NOT FOR BID

Division	Section Title	Pages
SERIES 0 - PROCUREMENT AND CONTRACT REQUIREMENTS		
00 01 10	TABLE OF CONTENTS	
00 01 15	LIST OF DRAWINGS	2
00 11 16	INVITATION TO BID	2
00 21 13	INSTRUCTIONS TO BIDDERS	14
00 41 13	BID FORM	6
00 43 13	BID BOND	2
00 52 13	STANDARD FORM OF AGREEMENT BETWEEN OWNER AND CONTRACTOR A101-2007	2
00 54 13	SUPPLEMENTARY CONDITIONS TO THE CONTRACT	9
00 61 13.13	PERFORMANCE BOND	2
00 61 13.16	PAYMENT BOND	2
00 62 76	APPLICATION FOR PAYMENT (SAMPLE AIA G702 & G703)	2
00 6277	BY AMERICA	2
00 72 13	GENERAL CONDITIONS TO THE CONTRACT (AIA A201)	2
00 73 13	SUPPLEMENTARY GENERAL CONDITIONS	10
00 73 46	DELAWARE DEPARTMENT OF LABOR PREVAILING WAGE RATES	2
00 81 13	GENERAL REQUIREMENTS	16
00 81 14	DRUG TESTING FORMS	2
DIVISION 1 - GENERAL REQUIREMENTS		
01 10 00	SUMMARY	6
01 14 00	WORK RESTRICTIONS	2
01 22 00	UNIT PRICES	4
01 24 00	PERMITS	2
01 25 00	CONTRACT MODIFICATION PROCEDURES	2
01 29 00	PAYMENT PROCEDURES	4
01 31 00	PROJECT MANAGEMENT AND COORDINATION	4
01 31 50	FIELD ENGINEERING	2
01 32 00	CONSTRUCTION PROGRESS DOCUMENTATION	4
01 32 23	PHOTOGRAPHIC DOCUMENTATION	2
01 33 00	SUBMITTAL PROCEDURES	10
01 40 00	QUALITY REQUIREMENTS	8
01 42 00	REFERENCE STANDARDS AND DEFINITIONS	4
01 50 00	TEMPORARY FACILITIES AND CONTROLS	4
01 56 00	ENVIRONMENTAL PROTECTION	4
01 56 39	TEMPORARY TREE AND PLANT PROTECTION	3
01 60 00	PRODUCT REQUIREMENTS	10
01 73 00	EXECUTION REQUIREMENTS	6
01 73 29	CUTTING AND PATCHING	4
01 74 19	CONSTRUCTION WASTE MANAGEMENT AND DISPOSAL	6

01 77 00 CLOSEOUT PROCEDURES 6
01 78 39 PROJECT RECORD DOCUMENTS 4

DIVISION 2 – EXISTING CONDITIONS

DIVISION 3 - CONCRETE

DIVISION 4 - MASONRY

DIVISION 5 - METALS
05 12 00 STRUCTURAL STEEL FRAMING 6
05 52 13 PIPE AND TUBE RAILING 4

DIVISION 6 – WOOD, PLASTICS AND COMPOSITES

DIVISION 7 - THERMAL AND MOISTURE PROTECTION

DIVISION 8 - OPENINGS

DIVISION 9 - FINISHES

DIVISION 10 - SPECIALTIES

DIVISION 11 - EQUIPMENT

DIVISION 12 - FURNISHINGS

DIVISION 13 - SPECIAL CONSTRUCTION
13 24 50 HELICAL ANCHOR FOUNDATIONS 10
13 29 50 PREFABRICATED PEDESTRIAN BRIDGE 8

DIVISION 14 - CONVEYING SYSTEMS

DIVISION 22 - PLUMBING

DIVISION 23 – HEATING, VENTILATING AND AIR CONDITIONING

NOT FOR BID

NOT FOR BID

DIVISION 26 – ELECTRICAL

DIVISION 27 – COMMUNICATIONS

DIVISION 28 – ELECTRONIC SAFETY AND SECURITY

DIVISION 31 – EARTHWORK
31 10 00 SITE CLEARING 4
31 50 00 EARTH MOVING 10

DIVISION 32 – EXTERIOR IMPROVEMENTS
32 92 00 TURF AND GRASSES 6

DIVISION 33 - UTILITIES

ADDITIONAL ITEMS
40 10 02 BITUMINOUS CONCRETE, SUPERPAVE TYPE C AND TYPE B 8
60 20 03,
60 30 25 PCC BRIDGE FOOTINGS AND ABUTMENTS 2
70 50 07 TRUNCATED DOMES 2

END OF TABLE OF CONTENTS

(THIS PAGE INTENTIONALLY LEFT BLANK)

NOT FOR BID

SECTION 00 01 15 - LIST OF DRAWINGS

Sheet No.	Title
C1.0	Cover Sheet
C1.1	Project Notes & Legend
C1.2	Project Scope
C1.3	Site Control Plan
C1.4	Overall Sheet Layout
C2.1 – C2.3	Demolition Plan
C3.1	Typical Sections
C4.1 – C4.2	Horizontal Alignment
C5.1 – C5.8	Site Plan and Profile
C6.1	Entrance Plan
C7.1 – C7.2	Details
S1.1	Bridge Plan, Elevation & Section
S1.2	South Bridge Approach
S1.3	North Bridge Approach
S1.4 – S1.7	Structural Details
S1.8	Boring Logs
SWM1.0	Stormwater Management Cover Sheet
SWM2.0	Overall Construction Site Stormwater Management Plan
SWM2.1 – SWM2.3	Construction Site Stormwater Management Plan 1 thru 3
SWM3.0 – SWM3.2	Construction Site Details and Notes
SWM4.0	Overall Post Construction Stormwater Management Sheet Layout
SWM4.1 – SWM4.4	Post Construction Stormwater Management Plan, Filter Strip #1 thru #4
SWM5.0	Contributing Drainage Area Details & Notes
SWM6.1	Pre-Limit of Disturbance Drainage Area Plan 1
SWM6.2	Pre-Limit of Disturbance Drainage Area Plan 2
SWM7.1	Post-Limit of Disturbance Drainage Area Plan 1
SWM7.2	Post-Limit of Disturbance Drainage Area Plan 2

NOT FOR BID

END OF SECTION 00 01 15

(THIS PAGE INTENTIONALLY LEFT BLANK)

NOT FOR BID

SECTION 00 11 16 – INVITATION TO BID

The Department of Natural Resources and Environmental Control, Division of Parks and Recreation, Office of Design and Development will receive sealed bids in the Auditorium, DNREC Building, 89 Kings Highway, Dover Delaware 19901, 2:00 p.m. local time on Wednesday, August 8, 2018, until at which time they will be publicly opened and read aloud in the Auditorium. Bidder bears the risk of late delivery. Any bid received after the stated time will be returned unopened.

Project involves Construction of a new, 5,965+/- long, 8-foot wide asphalt multi-use trail and bridge.

A **MANDATORY** Pre-Bid Meeting will be held at 10:00 a.m., July 24, 2018, at the Judge Morris Estate – 76 Polly Drummond Hill Road, Newark, Delaware 19711 for the purpose of establishing the listing of subcontractors and to answer questions. Representatives of each party to any Joint Venture must attend this meeting. **ATTENDANCE OF THIS MEETING IS A PREREQUISITE FOR BIDDING ON THIS CONTRACT.**

Sealed bids shall be addressed to the following address. The outer envelope should clearly indicate **"DNREC CONTRACT NO. WCCS-07A SEALED BID – DO NOT OPEN".**

Dept. of Natural Resources & Environmental Control
Division of Parks and Recreation
Office of Design and Development
89 Kings Highway, Dover DE 19901
Attn: Cindy A. Todd, RLA. Phone Number: 302-739-9210

Contract documents may be obtained at the office of the Division of Parks and Recreation upon receipt of $25.00 for each disc. This payment is non-refundable and the documents need not be returned. Checks are to be made payable to Division of Parks and Recreation.

Bidding documents will be available for review at the following locations: Division of Parks and Recreation; Delaware Contractors Association and Associated Builders and Contractors.

Bidders will not be subject to discrimination on the basis of race, creed, color, sex, sexual orientation, gender identity or national origin in consideration of this award, and Minority Business Enterprises, Disadvantaged Business Enterprises, Women-Owned Business Enterprises and Veteran-Owned Business Enterprises will be afforded full opportunity to submit bids on this contract. Each bid must be accompanied by a bid security equivalent to ten percent of the bid amount and all additive alternates. The successful bidder must post a performance bond and payment bond in a sum equal to 100 percent of the contract price upon execution of the contract. The Owner reserves the right to reject any or all bids and to waive any informalities therein. The Owner may extend the time and place for the opening of the bids from that described in the advertisement, with not less than two calendar days notice by certified delivery, facsimile machine or other electronic means to those bidders receiving plans.

Shawn M. Garvin, Secretary

END OF SECTION 00 01 15

NOT FOR BID

(THIS PAGE INTENTIONALLY LEFT BLANK)

NOT FOR BID

(THIS PAGE INTENTIONALLY LEFT BLANK)

NOT FOR BID

SECTION 00 21 13 - INSTRUCTIONS TO BIDDERS

NOT FOR BID

TABLE OF ARTICLES

1. DEFINITIONS

2. BIDDER'S REPRESENTATION

3. BIDDING DOCUMENTS

4. BIDDING PROCEDURES

5. CONSIDERATION OF BIDS

6. POST-BID INFORMATION

7. PERFORMANCE BOND AND PAYMENT BOND

8. FORM OF AGREEMENT BETWEEN OWNER AND CONTRACTOR

NOT FOR BID

ARTICLE 1: GENERAL

1.1 DEFINITIONS

1.1.1 Whenever the following terms are used, their intent and meaning shall be interpreted as follows:

1.2 STATE: The State of Delaware.

1.3 AGENCY: Contracting State Agency as noted on cover sheet.

1.4 DESIGNATED OFFICIAL: The agent authorized to act for the Agency.

1.5 BIDDING DOCUMENTS: Bidding Documents include the Bidding Requirements and the proposed Contract Documents. The Bidding Requirements consist of the Advertisement for Bid, Invitation to Bid, Instructions to Bidders, Supplementary Instructions to Bidders (if any), General Conditions, Supplementary General Conditions, General Requirements, Special Provisions (if any), the Bid Form (including the Non-collusion Statement), and other sample bidding and contract forms. The proposed Contract Documents consist of the form of Agreement between the Owner and Contractor, as well as the Drawings, Specifications (Project Manual) and all Addenda issued prior to execution of the Contract.

1.6 CONTRACT DOCUMENTS: The Contract Documents consist of the, Instructions to Bidders, Supplementary Instructions to Bidders (if any), General Conditions, Supplementary General Conditions, General Requirements, Special Provisions (if any), the form of agreement between the Owner and the Contractor, Drawings (if any), Specifications (Project Manual), and all addenda.

1.7 AGREEMENT: The form of the Agreement shall be AIA Document A101, Standard Form of Agreement between Owner and Contractor where the basis of payment is a STIPULATED SUM. In the case of conflict between the instructions contained therein and the General Requirements herein, these General Requirements shall prevail.

1.8 GENERAL REQUIREMENTS (or CONDITIONS): General Requirements (or conditions) are instructions pertaining to ifications.

5.4.4 The Agency shall have the right to accept Alternates in any order or combination, and to determine the low Bidder on the bastructions to bidders.

1.9 SPECIAL PROVISIONS: Special Provisions are specific conditions or requirements peculiar to the bidding documents and to the contract under consideration and are supplemental to the General Requirements. Should the Special Provisions conflict with the General Requirements, the Special Provisions shall prevail.

1.10 ADDENDA: Written or graphic instruments issued by the Owner/Architect prior to the execution of the contract which modify or interpret the Bidding Documents by additions, deletions, clarifications or corrections.

1.11 BIDDER OR VENDOR: A person or entity who formally submits a Bid for the material or Work contemplated, acting directly or through a duly authorized representative who meets the requirements set forth in the Bidding Documents.

1.12 SUB-BIDDER: A person or entity who submits a Bid to a Bidder for materials or labor, or both for a portion of the Work.

1.13 BID: A complete and properly executed proposal to do the Work for the sums stipulated therein, submitted in accordance with the Bidding Documents.

1.14 BASE BID: The sum stated in the Bid for which the Bidder offers to perform the Work described in the Bidding Documents as the base, to which Work may be added or from which Work may be deleted for sums stated in Alternate Bids (if any are required to be stated in the bid).

1.15 ALTERNATE BID (or ALTERNATE): An amount stated in the Bid, where applicable, to be added to or deducted from the amount of the Base Bid if the corresponding change in the Work, as described in the Bidding Documents is accepted.

1.16 UNIT PRICE: An amount stated in the Bid, where applicable, as a price per unit of measurement for materials, equipment or services or a portion of the Work as described in the Bidding Documents.

1.17 SURETY: The corporate body which is bound with and for the Contract, or which is liable, and which engages to be responsible for the Contractor's payments of all debts pertaining to and for his acceptable performance of the Work for which he has contracted.

1.18 BIDDER'S DEPOSIT: The security designated in the Bid to be furnished by the Bidder as a guaranty of good faith to enter into a contract with the Agency if the Work to be performed or the material or equipment to be furnished is awarded to him.

1.19 CONTRACT: The written agreement covering the furnishing and delivery of material or work to be performed.

1.20 CONTRACTOR: Any individual, firm or corporation with whom a contract is made by the Agency.

1.21 SUBCONTRACTOR: An individual, partnership or corporation which has a direct contract with a contractor to furnish labor and materials at the job site, or to perform construction labor and furnish material in connection with such labor at the job site.

1.22 CONTRACT BOND: The approved form of security furnished by the contractor and his surety as a guaranty of good faith on the part of the contractor to execute the work in accordance with the terms of the contract.

NOT FOR BID

NOT FOR BID

ARTICLE 2: BIDDER'S REPRESENTATIONS

2.1 PRE-BID MEETING

2.1.1 A pre-bid meeting for this project will be held at the time and place designated. Attendance at this meeting is a pre-requisite for submitting a Bid, unless this requirement is specifically waived elsewhere in the Bid Documents.

2.2 By submitting a Bid, the Bidder represents that:

2.2.1 The Bidder has read and understands the Bidding Documents and that the Bid is made in accordance therewith.

2.2.2 The Bidder has visited the site, become familiar with existing conditions under which the Work is to be performed and has correlated the Bidder's his personal observations with the requirements of the proposed Contract Documents.

2.2.3 The Bid is based upon the materials, equipment, and systems required by the Bidding Documents without exception.

2.3 JOINT VENTURE REQUIREMENTS

2.3.1 For Public Works Contracts, each Joint Venturer shall be qualified and capable to complete the Work with their own forces.

2.3.2 Included with the Bid submission, and as a requirement to bid, a copy of the executed Joint Venture Agreement shall be submitted and signed by all Joint Venturers involved.

2.3.3 All required Bid Bonds, Performance Bonds, Material and Labor Payment Bonds must be executed by both Joint Venturers and be placed in both of their names.

2.3.4 All required insurance certificates shall name both Joint Venturers.

2.3.5 Both Joint Venturers shall sign the Bid Form and shall submit a copy of a valid Delaware Business License with their Bid.

2.3.6 Both Joint Venturers shall include their Federal E.I. Number with the Bid.

2.3.7 In the event of a mandatory Pre-bid Meeting, each Joint Venturer shall have a representative in attendance.

2.3.8 Due to exceptional circumstances and for good cause shown, one or more of these provisions may be waived at the discretion of the State.

2.4 ASSIGNMENT OF ANTITRUST CLAIMS

2.4.1 As consideration for the award and execution by the Owner of this contract, the Contractor hereby grants, conveys, sells, assigns and transfers to the State of Delaware all of its right, title and interests in and to all known or unknown causes of action it presently has or may now or

hereafter acquire under the antitrust laws of the United States and the State of Delaware, relating to the particular goods or services purchased or acquired by the Owner pursuant to this contract.

NOT FOR BID

ARTICLE 3: BIDDING DOCUMENTS

3.1 COPIES OF BID DOCUMENTS

3.1.1 Bidders may obtain complete sets of the Bidding Documents from the Architectural/Engineering firm designated in the Advertisement or Invitation to Bid in the number and for the deposit sum, if any, stated therein.

3.1.2 Bidders shall use complete sets of Bidding Documents for preparation of Bids. The issuing Agency nor the Architect assume no responsibility for errors or misinterpretations resulting from the use of incomplete sets of Bidding Documents.

3.1.3 Any errors, inconsistencies or omissions discovered shall be reported to the Architect immediately.

3.1.4 The Agency and Architect may make copies of the Bidding Documents available on the above terms for the purpose of obtaining Bids on the Work. No license or grant of use is conferred by issuance of copies of the Bidding Documents.

3.2 INTERPRETATION OR CORRECTION OF BIDDING DOCUMENTS

3.2.1 The Bidder shall carefully study and compare the Bidding Documents with each other, and with other work being bid concurrently or presently under construction to the extent that it relates to the Work for which the Bid is submitted, shall examine the site and local conditions, and shall report any errors, inconsistencies, or ambiguities discovered to the Architect.

3.2.2 Bidders or Sub-bidders requiring clarification or interpretation of the Bidding Documents shall make a written request to the Architect at least seven days prior to the date for receipt of Bids. Interpretations, corrections and changes to the Bidding Documents will be made by written Addendum. Interpretations, corrections, or changes to the Bidding Documents made in any other manner shall not be binding.

3.2.3 The apparent silence of the specifications as to any detail, or the apparent omission from it of detailed description concerning any point, shall be regarded as meaning that only the best commercial practice is to prevail and only material and workmanship of the first quality are to be used. Proof of specification compliance will be the responsibility of the Bidder.

3.2.4 Unless otherwise provided in the Contract Documents, the Contractor shall provide and pay for all permits, labor, materials, equipment, tools, construction equipment and machinery, water, heat, utilities, transportation, and other facilities and services necessary for the proper execution and completion of the Work.

3.2.5 The Owner will bear the costs for all impact and user fees associated with the project.

3.3 SUBSTITUTIONS

3.3.1 The materials, products and equipment described in the Bidding Documents establish a standard of quality, required function, dimension, and appearance to be met by any proposed substitution. The specification of a particular manufacturer or model number is not intended to be proprietary in any way. Substitutions of products for those named will be considered, providing that the Vendor certifies that the function, quality, and performance characteristics of the material offered is equal or superior to that specified. It shall be the Bidder's responsibility to assure that the proposed substitution will not affect the intent of the design, and to make any installation modifications required to accommodate the substitution.

3.3.2 Requests for substitutions shall be made in writing to the Architect at least ten days prior to the date of the Bid Opening. Such requests shall include a complete description of the proposed substitution, drawings, performance and test data, explanation of required installation modifications due the substitution, and any other information necessary for an evaluation. The burden of proof of the merit of the proposed substitution is upon the proposer. The Architect's decision of approval or disapproval shall be final. The Architect is to notify Owner prior to any approvals.

3.3.3 If the Architect approves a substitution prior to the receipt of Bids, such approval shall be set forth in an Addendum. Approvals made in any other manner shall not be binding.

3.3.4 The Architect shall have no obligation to consider any substitutions after the Contract award.

3.4 ADDENDA

3.4.1 Addenda will be mailed or delivered to all who are known by the Architect to have received a complete set of the Bidding Documents.

3.4.2 Copies of Addenda will be made available for inspection wherever Bidding Documents are on file for that purpose.

3.4.3 No Addenda will be issued later than 4 days prior to the date for receipt of Bids except an Addendum withdrawing the request for Bids or one which extends the time or changes the location for the opening of bids.

3.4.4 Each bidder shall ascertain prior to submitting his Bid that they have received all Addenda issued, and shall acknowledge their receipt in their Bid in the appropriate space. Not acknowledging an issued Addenda could be grounds for determining a bid to be non-responsive.

ARTICLE 4: BIDDING PROCEDURES

4.1 PREPARATION OF BIDS

4.1.1 Submit the bids on the Bid Forms included with the Bidding Documents.

4.1.2 Submit the original Bid Form for each bid. Bid Forms may be removed from the project manual for this purpose.

NOT FOR BID

NOT FOR BID

4.1.3 Execute all blanks on the Bid Form in a non-erasable medium (typewriter or manually in ink).

4.1.4 Where so indicated by the makeup on the Bid Form, express sums in both words and figures, in case of discrepancy between the two, the written amount shall govern.

4.1.5 Interlineations, alterations or erasures must be initialed by the signer of the Bid.

4.1.6 BID ALL REQUESTED ALTERNATES AND UNIT PRICES, IF ANY. If there is no change in the Base Bid for an Alternate, enter "No Change". The Contractor is responsible for verifying that they have received all addenda issued during the bidding period. Work required by Addenda shall automatically become part of the Contract.

4.1.7 Make no additional stipulations on the Bid Form and do not qualify the Bid in any other manner.

4.1.8 Each copy of the Bid shall include the legal name of the Bidder and a statement whether the Bidder is a sole proprietor, a partnership, a corporation, or any legal entity, and each copy shall be signed by the person or persons legally authorized to bind the Bidder to a contract. A Bid by a corporation shall further give the state of incorporation and have the corporate seal affixed. A Bid submitted by an agent shall have a current Power of Attorney attached, certifying agent's authority to bind the Bidder.

4.1.9 Bidder shall complete the Non-Collusion Statement form included with the Bid Forms and include it with their Bid.

4.1.10 In the construction of all Public Works projects for the State of Delaware or any agency thereof, preference in employment of laborers, workers or mechanics shall be given to bona fide legal citizens of the State who have established citizenship by residence of at least 90 days in the State.

4.1.11 Each bidder shall include in their bid a copy of a valid Delaware Business License.'

4.1.12 Each bidder shall include signed Affidavit(s) for the Bidder and each listed Subcontractor certifying compliance with OMB Regulation 4104- "Regulations for the Drug Testing of Contractor and Subcontractor Employees Working on "Large Public Works Projects." "Large Public Works" is based upon the current threshold required for bidding Public Works as set by the Purchasing and Contracting Advisory Council.

4.2 BID SECURITY

4.2.1 All bids shall be accompanied by a deposit of either a good and sufficient bond to the agency for the benefit of the agency, with corporate surety authorized to do business in this State, the form of the bond and the surety to be approved by the agency, or a security of the bidder assigned to the agency, for a sum equal to at least 10% of the bid plus all add alternates, or in lieu of the bid bond a security deposit in the form of a certified check, bank treasurer's check, cashier's check, money order, or other prior approved secured deposit assigned to the State. The bid bond need not be for a specific sum, but may be stated to be for a sum equal to 10% of the bid plus all add alternates to which it relates and not to exceed a certain stated sum, if

said sum is equal to at least 10% of the bid. The Bid Bond form used shall be the standard OMB form (attached).

4.2.2 The Agency has the right to retain the bid security of Bidders to whom an award is being considered until either a formal contract has been executed and bonds have been furnished or the specified time has elapsed so the Bids may be withdrawn or all Bids have been rejected.

4.2.3 In the event of any successful Bidder refusing or neglecting to execute a formal contract and bond within 20 days of the awarding of the contract, the bid bond or security deposited by the successful bidder shall be forfeited.

4.3 SUBCONTRACTOR LIST

4.3.1 As required by Delaware Code, Title 29, section 6962(d)(10)b, each Bidder shall submit with their Bid a completed List of Sub-Contractors included with the Bid Form. NAME ONLY ONE SUBCONTRACTOR FOR EACH TRADE. A Bid will be considered non-responsive unless the completed list is included.

4.3.2 Provide the Name and Address for each listed subcontractor. Addresses by City, Town or Locality, plus State, will be acceptable.

4.3.3 It is the responsibility of the Contractor to ensure that their Subcontractors are in compliance with the provisions of this law. Also, if a Contractor elects to list themselves as a Subcontractor for any category, they must specifically name themselves on the Bid Form and be able to document their capability to act as Subcontractor in that category in accordance with this law.

4.4 EQUALITY OF EMPLOYMENT OPPORTUNITY ON PUBLIC WORKS

4.4.1 During the performance of this contract, the contractor agrees as follows:

A. The Contractor will not discriminate against any employee or applicant for employment because of race, creed, sex, color, sexual orientation, gender identity or national origin. The Contractor will take affirmative action to ensure the applicants are employed, and that employees are treated during employment, without regard to their race, creed, sex, color, sexual orientation, gender identity or national origin. Such action shall include, but not be limited to, the following: Employment, upgrading, demotion or transfer; recruitment or recruitment advertising; layoff or termination; rates of pay or other forms of compensation; and selection for training, including apprenticeship. The Contractor agrees to post in conspicuous places available to employees and applicants for employment notices to be provided by the contracting agency setting forth this nondiscrimination clause.

B. The Contractor will, in all solicitations or advertisements for employees placed by or on behalf of the Contractor, state that all qualified applicants will receive consideration for employment without regard to race, creed, sex, color, sexual orientation, gender identity or national origin."

NOT FOR BID

4.5 PREVAILING WAGE REQUIREMENT

4.5.1 Wage Provisions: For renovation and new construction projects whose costs exceed the thresholds contained in Delaware Code, Title 29, Section 6960, the minimum wage rates for various classes of laborers and mechanics shall be as determined by the Department of Labor, Division of Industrial Affairs of the State of Delaware.

4.5.2 The employer shall pay all mechanics and labors employed directly upon the site of work, unconditionally and not less often than once a week and without subsequent deduction or rebate on any account, the full amounts accrued at time of payment, computed at wage rates not less than those stated in the specifications, regardless of any contractual relationship which may be alleged to exist between the employer and such laborers and mechanics.

4.5.3 The scale of the wages to be paid shall be posted by the employer in a prominent and easily accessible place at the site of the work.

4.5.4 Every contract based upon these specifications shall contain a stipulation that sworn payroll information, as required by the Department of Labor, be furnished weekly. The Department of Labor shall keep and maintain the sworn payroll information for a period of 6 months from the last day of the work week covered by the payroll.

4.6 SUBMISSION OF BIDS

4.6.1 Enclose the Bid, the Bid Security, and any other documents required to be submitted with the Bid in a sealed opaque envelope. Address the envelope to the party receiving the Bids. Identify with the project name, project number, and the Bidder's name and address. If the Bid is sent by mail, enclose the sealed envelope in a separate mailing envelope with the notation "BID ENCLOSED" on the face thereof. The State is not responsible for the opening of bids prior to bid opening date and time that are not properly marked.

4.6.2 Deposit Bids at the designated location prior to the time and date for receipt of bids indicated in the Advertisement for Bids. Bids received after the time and date for receipt of bids will be marked “LATE BID” and returned.

4.6.3 Bidder assumes full responsibility for timely delivery at location designated for receipt of bids.

4.6.4 Oral, telephonic or telegraphic bids are invalid and will not receive consideration.

4.6.5 Withdrawn Bids may be resubmitted up to the date and time designated for the receipt of Bids, provided that they are then fully in compliance with these Instructions to Bidders.

NOT FOR BID

4.7 MODIFICATION OR WITHDRAW OF BIDS

4.7.1 Prior to the closing date for receipt of Bids, a Bidder may withdraw a Bid by personal request and by showing proper identification to the Architect. A request for withdraw by letter or fax, if the Architect is notified in writing prior to receipt of fax, is acceptable. A fax directing a modification in the bid price will render the Bid informal, causing it to be ineligible for consideration of award. Telephone directives for modification of the bid price shall not be permitted and will have no bearing on the submitted proposal in any manner.

4.7.2 Bidders submitting Bids that are late shall be notified as soon as practicable and the bid shall be returned.

4.7.3 A Bid may not be modified, withdrawn or canceled by the Bidder during a thirty (30) day period following the time and date designated for the receipt and opening of Bids, and Bidder so agrees in submitting their Bid. Bids shall be binding for 30 days after the date of the Bid opening.

ARTICLE 5: CONSIDERATION OF BIDS

5.1 OPENING/PRESENTATION OF BIDS

5.1.1 Unless otherwise stated, Bids received on time will be publicly opened and will be read aloud. An abstract of the Bids will be made available to Bidders.

5.1.2 The Agency shall have the right to reject any and all Bids. A Bid not accompanied by a required Bid Security or by other data required by the Bidding Documents, or a Bid which is in any way incomplete or irregular is subject to rejection.

5.1.3 If the Bids are rejected, it will be done within thirty (30) calendar day of the Bid opening.

5.2 COMPARISON OF BIDS

5.2.1 After the Bids have been opened and read, the bid prices will be compared and the result of such comparisons will be made available to the public. Comparisons of the Bids may be based on the Base Bid plus desired Alternates. The Agency shall have the right to accept Alternates in any order or combination.

5.2.2 The Agency reserves the right to waive technicalities, to reject any or all Bids, or any portion thereof, to advertise for new Bids, to proceed to do the Work otherwise, or to abandon the Work, if in the judgment of the Agency or its agent(s), it is in the best interest of the State.

5.2.3 An increase or decrease in the quantity for any item is not sufficient grounds for an increase or decrease in the Unit Price.

5.2.4 The prices quoted are to be those for which the material will be furnished F.O.B. Job Site and include all charges that may be imposed during the period of the Contract.

NOT FOR BID

5.2.5 No qualifying letter or statements in or attached to the Bid, or separate discounts will be considered in determining the low Bid except as may be otherwise herein noted. Cash or separate discounts should be computed and incorporated into Unit Bid Price(s).

5.3 DISQUALIFICATION OF BIDDERS

5.3.1 An agency shall determine that each Bidder on any Public Works Contract is responsible before awarding the Contract. Factors to be considered in determining the responsibility of a Bidder include:

A. The Bidder's financial, physical, personnel or other resources including Subcontracts;

B. The Bidder's record of performance on past public or private construction projects, including, but not limited to, defaults and/or final adjudication or admission of violations of the Prevailing Wage Laws in Delaware or any other state;

C. The Bidder's written safety plan;

D. Whether the Bidder is qualified legally to contract with the State;

E. Whether the Bidder supplied all necessary information concerning its responsibility; and,

F. Any other specific criteria for a particular procurement, which an agency may establish; provided however, that, the criteria be set forth in the Invitation to Bid and is otherwise in conformity with State and/or Federal law.

5.3.2 If an agency determines that a Bidder is nonresponsive and/or nonresponsible, the determination shall be in writing and set forth the basis for the determination. A copy of the determination shall be sent to the affected Bidder within five (5) working days of said determination.

5.3.3 In addition, any one or more of the following causes may be considered as sufficient for the disqualification of a Bidder and the rejection of their Bid or Bids.

5.3.3.1 More than one Bid for the same Contract from an individual, firm or corporation under the same or different names.

5.3.3.2 Evidence of collusion among Bidders.

5.3.3.3 Unsatisfactory performance record as evidenced by past experience.

5.3.3.4 If the Unit Prices are obviously unbalanced either in excess or below reasonable cost analysis values.

5.3.3.5 If there are any unauthorized additions, interlineation, conditional or alternate bids or irregularities of any kind which may tend to make the Bid incomplete, indefinite or ambiguous as to its meaning.

NOT FOR BID

5.3.3.6 If the Bid is not accompanied by the required Bid Security and other data required by the Bidding Documents.

5.3.3.7 If any exceptions or qualifications of the Bid are noted on the Bid Form.

5.4 ACCEPTANCE OF BID AND AWARD OF CONTRACT

5.4.1 A formal Contract shall be executed with the successful Bidder within twenty (20) calendar days after the award of the Contract.

5.4.2 Per Section 6962(d)(13) a., Title 29 Delaware Code, "The contracting agency shall award any public works contract within thirty (30) days of the bid opening to the lowest responsive and responsible Bidder, unless the Agency elects to award on the basis of best value, in which case the election to award on the basis of best value shall be stated in the Invitation To Bid."

5.4.3 Each Bid on any Public Works Contract must be deemed responsive by the Agency to be considered for award. A responsive Bid shall conform in all material respects to the requirements and criteria set forth in the Contract Documents and specifications.

5.4.4 The Agency shall have the right to accept Alternates in any order or combination, and to determine the low Bidder on the basis of the sum of the Base Bid, plus accepted Alternates.

5.4.5 The successful Bidder shall execute a formal contract, submit the required Insurance Certificate, and furnish good and sufficient bonds, unless specifically waived in the General Requirements, in accordance with the General Requirement, within twenty (20) days of official notice of contract award. The successful Bidder shall provide two business days prior to contract execution, copies of the Employee Drug Testing Program for the Bidder and all listed Subcontractors. Bonds shall be for the benefit of the Agency with surety in the amount of 100% of the total contract award. Said Bonds shall be conditioned upon the faithful performance of the contract. Bonds shall remain in affect for period of one year after the date of substantial completion.

5.4.6 If the successful Bidder fails to execute the required Contract,Bond and all required information, as aforesaid, within twenty (20) calendar days after the date of official Notice of the Award of the Contract, their Bid guaranty shall immediately be taken and become the property of the State for the benefit of the Agency as liquidated damages, and not as a forfeiture or as a penalty. Award will then be made to the next lowest qualified Bidder of the Work or readvertised, as the Agency may decide.

5.4.7 Each bidder shall supply with its bid its taxpayer identification number (i.e., federal employer identification number or social security number) and a copy of its Delaware business license, and should the vendor be awarded a contract, such vendor shall provide to the agency the taxpayer identification license numbers of such subcontractors. Such numbers shall be provided on the later of the date on which such subcontractor is required to be identified or the time the contract is executed. The successful Bidder shall provide to the agency to which it is contracting, within 30 days of entering into such public works contract, copies of all Delaware Business licenses of subcontractors and/or independent contractors that will

NOT FOR BID

perform work for such public works contract. However, if a subcontractor or independent contractor is hired or contracted more than 20 days after the Bidder entered the public works contract the Delaware Business license of such subcontractor or independent contractor shall be provided to the agency within 10 days of being contracted or hired.

5.4.8 The Bid Security shall be returned to the successful Bidder upon the execution of the formal contract. The Bid Securities of unsuccessful bidders shall be returned within thirty (30) calendar days after the opening of the Bids.

NOT FOR BID

ARTICLE 6: POST-BID INFORMATION

6.1 CONTRACTOR'S QUALIFICATION STATEMENT

6.1.1 Bidders to whom award of a Contract is under consideration shall, if requested by the Agency, submit a properly executed AIA Document A305, Contractor's Qualification Statement, unless such a statement has been previously required and submitted.

6.2 BUSINESS DESIGNATION FORM

6.2.1 Successful bidder shall be required to accurately complete an Office of Management and Budget Business Designation Form for Subcontractors.

ARTICLE 7: PERFORMANCE BOND AND PAYMENT BOND

7.1 BOND REQUIREMENTS

7.1.1 The cost of furnishing the required Bonds, that are stipulated in the Bidding Documents, shall be included in the Bid.

7.1.2 If the Bidder is required by the Agency to secure a bond from other than the Bidder's usual sources, changes in cost will be adjusted as provide in the Contract Documents.

7.1.3 The Performance and Payment Bond forms used shall be the standard OMB forms (attached).

7.2 TIME OF DELIVERY AND FORM OF BONDS

7.2.1 The bonds shall be dated on or after the date of the Contract.

7.2.2 The Bidder shall require the attorney-in-fact who executes the required bonds on behalf of the surety to affix a certified and current copy of the power of attorney.

ARTICLE 8: FORM OF AGREEMENT BETWEEN AGENCY AND CONTRACTOR

8.1 Unless otherwise required in the Bidding Documents, the Agreement for the Work will be written on AIA Document A101, Standard Form of Agreement Between Owner and Contractor Where the Basis of Payment is a Stipulated Sum.

END OF INSTRUCTIONS TO BIDDERS

NOT FOR BID

TRI-VALLEY TRAIL, PHASE II
WHITE CLAY CREEK STATE PARK
DIVISION OF PARKS AND RECREATION CONTRACT NO. WCCSP-07A

BID FORM

NOT FOR BID

For Bids Due: July 26, 2018, at 2:00 p.m. To: Dept. of Natural Resources and Environmental Control
Division of Parks and Recreation
Office of Design and Development
89 Kings Highway, Dover DE 19901

Name of Bidder: _____

Delaware Business License No.: _____ **Taxpayer ID No.:** _____
(A copy of Bidder's Delaware Business License must be attached to this form.)

(Other License Nos.): _____

Phone Number: ( ) _____ _____ **Fax Number: ( ) _____ _____**

The undersigned, representing that he has read and understands the Bidding Documents and that this bid is made in accordance therewith, that he has visited the site and has familiarized himself with the local conditions under which the Work is to be performed, and that his bid is based upon the materials, systems and equipment described in the Bidding Documents without exception, hereby proposes and agrees to provide all labor, materials, plant, equipment, supplies, transport and other facilities required to execute the work described by the aforesaid documents for the lump sum itemized below:

$ _____

($)

TRI-VALLEY TRAIL, PHASE II
WHITE CLAY CREEK STATE PARK
DIVISION OF PARKS AND RECREATION CONTRACT NO. WCCSP-07A

BID FORM

ALTERNATES

Alternate prices conform to applicable project specification section. Refer to specifications for a complete description of the following Alternates. An "ADD" or "DEDUCT" amount is indicated by the crossed out part that does not apply.

ALTERNATE No. 1: Helical Pile Static Load Testing

Add/Deduct: _____
($)

No. of Days to Complete Alternate 1: _____

NOT FOR BID

TRI-VALLEY TRAIL, PHASE II
WHITE CLAY CREEK STATE PARK
DIVISION OF PARKS AND RECREATION CONTRACT NO. WCCSP-07A

BID FORM

UNIT PRICES

Unit prices conform to applicable project specification section. Refer to the specifications for a complete description of the following Unit Prices:

		DEDUCT	ADD
UNIT PRICE No. 1:	Prefabricated Pedestrian Bridge (EA)	$ _____	$ _____
UNIT PRICE No. 2	Helical Screw Foundations (EA)	$ _____	$ _____
UNIT PRICE No. 3	Borrow, Type F (CY)	$ _____	$ _____
UNIT PRICE No. 4	Disposal of Excess Material (CY)	$ _____	$ _____

NOT FOR BID

TRI-VALLEY TRAIL, PHASE II
WHITE CLAY CREEK STATE PARK
DIVISION OF PARKS AND RECREATION CONTRACT NO. WCCSP-07A

BID FORM

NOT FOR BID

I/We acknowledge Addendums numbered _____ and the price(s) submitted include any cost/schedule impact they may have.

This bid shall remain valid and cannot be withdrawn for thirty (30) days from the date of opening of bids, and the undersigned shall abide by the Bid Security forfeiture provisions. Bid Security is attached to this Bid.

The Owner shall have the right to reject any or all bids, and to waive any informality or irregularity in any bid received.

This bid is based upon work being accomplished by the Sub-Contractors named on the list attached to this bid.

Should I/We be awarded this contract, I/We pledge to achieve substantial completion of all the work within _____calendar days of the Notice to Proceed.

The undersigned represents and warrants that he has complied and shall comply with all requirements of local, state, and national laws; that no legal requirement has been or shall be violated in making or accepting this bid, in awarding the contract to him or in the prosecution of the work required; that the bid is legal and firm; that he has not, directly or indirectly, entered into any agreement, participated in any collusion, or otherwise taken action in restraint of free competitive bidding.

Upon receipt of written notice of the acceptance of this Bid, the Bidder shall, within twenty (20) calendar days, execute the agreement in the required form and deliver the Contract Bonds, and Insurance Certificates, required by the Contract Documents.

I am / We are an Individual / a Partnership / a Corporation

By _____ Trading as _____
(Individual's/General Partner's /Corporate Name)

_____
(State of Corporation)

Business Address: _____
_____
_____

Witness: _____ By: _____
(Authorized Signature)

(Seal)

_____
(Title)

Date: _____

ATACHMENTS
Sub-Contractor List
Non-Collusion Statement
Affidavit(s) of Employee Drug Testing Program
Bid Security
(Others as Required by Project Manual)

TRI-VALLEY TRAIL, PHASE II
WHITE CLAY CREEK STATE PARK
DIVISION OF PARKS AND RECREATION CONTRACT NO. WCCSP-07A

BID FORM

SUBCONTRACTOR LSIST

NOT FOR BID

In accordance with Title 29, Chapter 6962 (d)(10)b Delaware Code, the following sub-contractor listing must accompany the bid submittal. The name and address of the sub-contractor **must be listed for each category** where the bidder intends to use a sub-contractor to perform that category of work. In order to provide full disclosure and acceptance of the bid by the *Owner*, **it is required that bidders list themselves as being the sub-contractor for all categories where he/she is qualified and intends to perform such work.**

	Subcontractor Category	Subcontractor	Address (City & State)	Subcontractors tax payer ID # or Delaware Business license #
1.				
2.				
3.				
4.				
5.				
6.				
7.				
8.				

TRI-VALLEY TRAIL, PHASE II
WHITE CLAY CREEK STATE PARK
DIVISION OF PARKS AND RECREATION CONTRACT NO. WCCSP-07A

BID FORM

NON-COLLUSION STATEMENT

This is to certify that the undersigned bidder has neither directly or indirectly, entered into any agreement, participated in any collusion or otherwise taken any action in restraint of free competitive bidding in connection with this proposal submitted this date to the Office of Design and Development, Division of Parks and Recreation.

All the terms and conditions of the TRI-VALLEY TRAIL, PHASE II have been thoroughly examined and are understood.

NAME OF BIDDER _____

AUTHORIZED REPRESENTATIVE (TYPED): _____

AUTHORIZED REPRESENTATIVE (SIGNATURE): _____

TITLE: _____

ADDRESS OF BIDDER: _____

_____

_____

E-MAIL: _____

PHONE NUMBER: _____

Sworn to and Subscribed before me this _____ day of _____ of 20 _____.

My commission expires _____. NOTARY PULIC _____

<u>THIS PAGE MUST BE SIGNED AND NOTORIZED FOR YOUR BID TO BE CONSIDERED.</u>

NOT FOR BID

TRI-VALLEY TRAIL, PHASE II
WHITE CLAY CREEK STATE PARK
DIVISION OF PARKS AND RECREATION CONTRACT NO. WCCSP-07A

AFFIDAVIT
OF
EMPLOYEE DRUG TESTING PROGRAM

NOT FOR BID

4104 Regulations for the Drug Testing of Contractor and Subcontractor Employees Working on Large Public Works Projects requires that Contractors and Subcontractors implement a program of mandatory drug testing for Employees who work on Large Public Works Contracts funded all or in part with public funds.

We hereby certify that we have in place or will implement during the entire term of the contract a Mandatory Drug Testing Program for our employees on the jobsite that complies with this regulation:

Contractor/Subcontractor Name: _____

Contractor/Subcontractor Address: _____

_____

_____

Authorized Representative (typed or printed): _____

Authorized Representative (signature): _____

Title: _____

Sworn to and Subscribed before me this _____day of _____ 20____.

My Commission expires _____. NOTARY PUBLIC _____.

<u>THIS PAGE MUST BE SIGNED AND NOTARIZED FOR YOUR BID TO BE CONSIDERED.</u>

(THIS PAGE INTENTIONALLY LEFT BLANK)

NOT FOR BID

STATE OF DELAWARE
DEPARTMENT OF NATURAL RESOURCES AND ENVIRONMENTAL CONTROL

BID BOND

TO ACCOMPANY PROPOSAL
(Not necessary if security is used)

NOT FOR BID

KNOW ALL MEN BY THESE PRESENTS That: _____ _____of _____ in the County of _____ _____and State of _____ as **Principal**, and _____ _____ of _____ in the County of _____ and State of _____ as **Surety**, legally authorized to do business in the State of Delaware ("**State**"), are held and firmly unto the **State** in the sum of _____ _____ Dollars ($_____) or _____ percent not to exceed _____ _____ Dollars ($_____) of amount of bid on Contract No. _____, to be paid to the **State** for the use and benefit of _____ (***insert State agency name***) for which payment well and truly to be made, we do bind ourselves, our and each of our heirs, executors, administrators, and successors, jointly and severally for and in the whole firmly by these presents.

NOW THE CONDITION OF THIS OBLIGATION IS SUCH That if the above bonded **Principal** who has submitted to the _____ (***insert State agency name***) a certain proposal to enter into this contract for the furnishing of certain material and/or services within the **State**, shall be awarded this Contract, and if said **Principal** shall well and truly enter into and execute this Contract as may be required by the terms of this Contract and approved by the _____ _____ (***insert State agency name***) this Contract to be entered into within twenty days after the date of official notice of the award thereof in accordance with the terms of said proposal, then this obligation shall be void or else to be and remain in full force and virtue.

Sealed with _____ seal and dated this _____day of _____ in the year of our Lord two thousand and _____ (20___).

SEALED, AND DELIVERED IN THE
Presence of

_____
Name of Bidder (Organization)

Corporate Seal

By: _____
Authorized Signature

Attest _____

_____
Title

_____
Name of Surety

Witness:_____

By: _____

_____
Title

(THIS PAGE INTENTIONALLY LEFT BLANK)

NOT FOR BID

STANDARD FORM OF AGREEMENT BETWEEN OWNER AND CONTRACTOR A101-2007

The contract to be utilized on this project shall be the "Standard Form of Agreement Between Owner and Contractor" AIA Document A101-2007.

NOT FOR BID

NOT FOR BID

(THIS PAGE INTENTIONALLY LEFT BLANK)

SECTION 005413 - SUPPLEMENT TO AGREEMENT BETWEEN OWNER AND CONTRACTOR A101-2007

NOT FOR BID

The following supplements modify the "Standard Form of Agreement Between Owner and Contractor," AIA Document A101-2007. Where a portion of the Standard Form of Agreement is modified or deleted by the following, the unaltered portions of the Standard Form of Agreement shall remain in effect.

ARTICLE 5: PAYMENTS

5.1 PROGRESS PAYMENTS

5.1.3 Delete paragraph 5.1.3 in its entirety and replace with the following:

"Provided that a valid Application for Payment is received by the Architect that meets all requirements of the Contract, payment shall be made by the Owner not later than 30 days after the Owner receives the valid Application for Payment."

ARTICLE 6: DISPUTE RESOLUTION

6.2 BINDING DISPUTE RESOLUTION

Check Other – and add the following sentence:

"Any remedies available in law or in equity."

ARTICLE 8: MISCELLANEOUS PROVISIONS

8.2 Insert the following:

"Payments are due 30 days after receipt of a valid Application for Payment. After that 30 day period, interest may be charged at the rate of 1% per month not to exceed 12% per annum."

Delete paragraph 8.5 in its entirety and replace with the following:

"The Contractor's representative shall not be changed without ten days written notice to the Owner."

END OF SUPPLEMENT TO AGREEMENT BETWEEN OWNER AND CONTRACTOR

(THIS PAGE INTENTIONALLY LEFT BLANK)

NOT FOR BID

STATE OF DELAWARE
OFFICE OF MANAGEMENT AND BUDGET

PERFORMANCE BOND

Bond Number _____

NOT FOR BID

KNOW ALL PERSONS BY THESE PRESENTS, that we, _____, as principal ("**Principal**"), and _____, a _____ corporation, legally authorized to do business in the State of Delaware, as surety ("**Surety**"), are held and firmly bound unto the _____ ("**Owner**") (***insert State agency name***), in the amount of _____ ($_____), to be paid to **Owner**, for which payment well and truly to be made, we do bind ourselves, our and each and every of our heirs, executors, administrations, successors and assigns, jointly and severally, for and in the whole, firmly by these presents.

Sealed with our seals and dated this _____ day of _____, 20__.

NOW THE CONDITION OF THIS OBLIGATION IS SUCH, that if **Principal**, who has been awarded by **Owner** that certain contract known as Contract No. _____ dated the _____ day of _____, 20__ (the "Contract"), which Contract is incorporated herein by reference, shall well and truly provide and furnish all materials, appliances and tools and perform all the work required under and pursuant to the terms and conditions of the Contract and the Contract Documents (as defined in the Contract) or any changes or modifications thereto made as therein provided, shall make good and reimburse **Owner** sufficient funds to pay the costs of completing the Contract that **Owner** may sustain by reason of any failure or default on the part of **Principal**, and shall also indemnify and save harmless **Owner** from all costs, damages and expenses arising out of or by reason of the performance of the Contract and for as long as provided by the Contract; then this obligation shall be void, otherwise to be and remain in full force and effect.

Surety, for value received, hereby stipulates and agrees, if requested to do so by **Owner**, to fully perform and complete the work to be performed under the Contract pursuant to the terms, conditions and covenants thereof, if for any cause **Principal** fails or neglects to so fully perform and complete such work.

Surety, for value received, for itself and its successors and assigns, hereby stipulates and agrees that the obligation of **Surety** and its bond shall be in no way impaired or affected by any extension of time, modification, omission, addition or change in or to the Contract or the work to be performed thereunder, or by any payment thereunder before the time required therein, or by any waiver of any provisions thereof, or by any assignment, subletting or other transfer thereof or of any work to be performed or any monies due or to become due thereunder; and **Surety** hereby waives notice of any and all such extensions, modifications, omissions, additions, changes, payments, waivers, assignments, subcontracts and transfers and hereby expressly stipulates and agrees that any and all things done and omitted to be done by and in relation to assignees, subcontractors, and other

transferees shall have the same effect as to **Surety** as though done or omitted to be done by or in relation to **Principal**.

Surety hereby stipulates and agrees that no modifications, omissions or additions in or to the terms of the Contract shall in any way whatsoever affect the obligation of **Surety** and its bond.

Any proceeding, legal or equitable, under this Bond may be brought in any court of competent jurisdiction in the State of Delaware. Notices to **Surety** or Contractor may be mailed or delivered to them at their respective addresses shown below.

IN WITNESS WHEREOF, **Principal** and **Surety** have hereunto set their hand and seals, and such of them as are corporations have caused their corporate seals to be hereto affixed and these presents to be signed by their duly authorized officers, the day and year first above written.

NOT FOR BID

PRINCIPAL

Name: _____

Witness or Attest: Address: _____

_____ By: _____(SEAL)
Name: Name:
Title:

(Corporate Seal)

SURETY

Name: _____

Witness or Attest: Address: _____

_____ By: _____ (SEAL)
Name: Name:
Title:

(Corporate Seal)

STATE OF DELAWARE
OFFICE OF MANAGEMENT AND BUDGET

PAYMENT BOND

Bond Number: _____

NOT FOR BID

KNOW ALL PERSONS BY THESE PRESENTS, that we, _____, as principal ("**Principal**"), and _____, a _____ corporation, legally authorized to do business in the State of Delaware, as surety ("**Surety**"), are held and firmly bound unto the _____ ("**Owner**") (***insert State agency name***), in the amount of _____ ($_____) to be paid to **Owner**, for which payment well and truly to be made, we do bind ourselves, our and each and every of our heirs, executors, administrations, successors and assigns, jointly and severally, for and in the whole firmly by these presents.

Sealed with our seals and dated this _____ day of_____, 20__.

NOW THE CONDITION OF THIS OBLIGATION IS SUCH, that if **Principal**, who has been awarded by **Owner** that certain contract known as Contract No. _____dated the _____ day of _____, 20__ (the "Contract"), which Contract is incorporated herein by reference, shall well and truly pay all and every person furnishing materials or performing labor or service in and about the performance of the work under the Contract, all and every sums of money due him, her, them or any of them, for all such materials, labor and service for which **Principal** is liable, shall make good and reimburse **Owner** sufficient funds to pay such costs in the completion of the Contract as **Owner** may sustain by reason of any failure or default on the part of **Principal**, and shall also indemnify and save harmless **Owner** from all costs, damages and expenses arising out of or by reason of the performance of the Contract and for as long as provided by the Contract; then this obligation shall be void, otherwise to be and remain in full force and effect.

Surety, for value received, for itself and its successors and assigns, hereby stipulates and agrees that the obligation of **Surety** and its bond shall be in no way impaired or affected by any extension of time, modification, omission, addition or change in or to the Contract or the work to be performed thereunder, or by any payment thereunder before the time required therein, or by any waiver of any provisions thereof, or by any assignment, subletting or other transfer thereof or of any work to be performed or any monies due or to become due thereunder; and **Surety** hereby waives notice of any and all such extensions, modifications, omissions, additions, changes, payments, waivers, assignments, subcontracts and transfers and hereby expressly stipulates and agrees that any and all things done and omitted to be done by and in relation to assignees, subcontractors, and other transferees shall have the same effect as to **Surety** as though done or omitted to be done by or in relation to **Principal**.

Surety hereby stipulates and agrees that no modifications, omission or additions in or to the terms of the Contract shall in any way whatsoever affect the obligation of **Surety** and its bond.

Any proceeding, legal or equitable, under this Bond may be brought in any court of competent jurisdiction in the State of Delaware. Notices to **Surety** or Contractor may be mailed or delivered to them at their respective addresses shown below.

IN WITNESS WHEREOF, **Principal** and **Surety** have hereunto set their hand and seals, and such of them as are corporations have caused their corporate seal to be hereto affixed and these presents to be signed by their duly authorized officers, the day and year first above written.

NOT FOR BID

PRINCIPAL

Name: _____

Witness or Attest: Address: _____

_____ By: _____(SEAL)
Name: Name:
Title:

(Corporate Seal)

SURETY

Name: _____

Witness or Attest: Address: _____

_____ By: _____(SEAL)
Name: Name:
Title:

(Corporate Seal)

AIA® Document G702™ – 1992

Application and Certificate for Payment

TO OWNER:	PROJECT: BHH	APPLICATION NO: 001	Distribution to:
		PERIOD TO:	OWNER: ☐
		CONTRACT FOR: General Construction	ARCHITECT: ☐
FROM CONTRACTOR:	VIA ARCHITECT: Bernardon Haber Holloway Architects PC, Three Mill Road, Suite 211, Wilmington, Delaware 19806	CONTRACT DATE:	CONTRACTOR: ☐
		PROJECT NOS: / /	FIELD: ☐
			OTHER: ☐

CONTRACTOR'S APPLICATION FOR PAYMENT

Application is made for payment, as shown below, in connection with the Contract.
Continuation Sheet, AIA Document G703, is attached.

1. ORIGINAL CONTRACT SUM ..... $ 0.00
2. Net change by Change Orders ..... $ 0.00
3. CONTRACT SUM TO DATE (Line 1 ± 2) ..... $ 0.00
4. TOTAL COMPLETED & STORED TO DATE (Column G on G703) ..... $ 0.00
5. RETAINAGE:
   a. 0 % of Completed Work (Column D + E on G703) $ 0.00
   b. 0 % of Stored Material (Column F on G703) $ 0.00
   Total Retainage (Lines 5a + 5b or Total in Column I of G703) ..... $ 0.00
6. TOTAL EARNED LESS RETAINAGE ..... $ 0.00
   (Line 4 Less Line 5 Total)
7. LESS PREVIOUS CERTIFICATES FOR PAYMENT ..... $ 0.00
   (Line 6 from prior Certificate)
8. CURRENT PAYMENT DUE ..... $ 0.00
9. BALANCE TO FINISH, INCLUDING RETAINAGE
   (Line 3 less Line 6) $ 0.00

CHANGE ORDER SUMMARY	ADDITIONS	DEDUCTIONS
Total changes approved in previous months by Owner	$ 0.00	$ 0.00
Total approved this Month	$ 0.00	$ 0.00
TOTALS	$ 0.00	$ 0.00
NET CHANGES by Change Order	$	0.00

The undersigned Contractor certifies that to the best of the Contractor's knowledge, information and belief the Work covered by this Application for Payment has been completed in accordance with the Contract Documents, that all amounts have been paid by the Contractor for Work for which previous Certificates for Payment were issued and payments received from the Owner, and that current payment shown herein is now due.

CONTRACTOR:

By: _____ Date: _____

State of:

County of:

Subscribed and sworn to before me this day of

Notary Public:

My Commission expires:

ARCHITECT'S CERTIFICATE FOR PAYMENT

In accordance with the Contract Documents, based on on-site observations and the data comprising this application, the Architect certifies to the Owner that to the best of the Architect's knowledge, information and belief the Work has progressed as indicated, the quality of the Work is in accordance with the Contract Documents, and the Contractor is entitled to payment of the AMOUNT CERTIFIED.

AMOUNT CERTIFIED ..... $ 0.00

(Attach explanation if amount certified differs from the amount applied. Initial all figures on this Application and on the Continuation Sheet that are changed to conform with the amount certified.)

ARCHITECT:

By: _____ Date: _____

This Certificate is not negotiable. The AMOUNT CERTIFIED is payable only to the Contractor named herein. Issuance, payment and acceptance of payment are without prejudice to any rights of the Owner or Contractor under this Contract

NOT FOR BID

AIA Document G702™ – 1992. Copyright © 1953, 1963, 1965, 1978 and 1992 by The American Institute of Architects. All rights reserved. WARNING: This AIA® Document is protected by U.S. Copyright Law and International Treaties. Unauthorized reproduction or distribution of this AIA® Document, or any portion of it, may result in severe civil and criminal penalties, and will be prosecuted to the maximum extent possible under the law. This document was produced by AIA software at 15:47:58 on 03/02/2006 under Order No.1000210037_1 which expires on 12/26/2006, and is not for resale.
(1431372660)
User Notes:

AIA® Document G703™ – 1992

Continuation Sheet

AIA Document G702, APPLICATION AND CERTIFICATION FOR PAYMENT, containing Contractor's signed certification is attached.
In tabulations below, amounts are stated to the nearest dollar.
Use Column I on Contracts where variable retainage for line items may apply.

APPLICATION NO: 001
APPLICATION DATE:
PERIOD TO:
ARCHITECT'S PROJECT NO:

A	B	C	D	E	F	G		H	I
ITEM NO.	DESCRIPTION OF WORK	SCHEDULED VALUE	WORK COMPLETED: FROM PREVIOUS APPLICATION (D + E)	WORK COMPLETED: THIS PERIOD	MATERIALS PRESENTLY STORED (NOT IN D OR E)	TOTAL COMPLETED AND STORED TO DATE (D+E+F)	% (G ÷ C)	BALANCE TO FINISH (C - G)	RETAINAGE (IF VARIABLE RATE)
	GRAND TOTAL	$ 0.00	$ 0.00	$ 0.00	$ 0.00	$ 0.00	0.00 %	$ 0.00	$ 0.00

NOT FOR BID

AIA Document G703™ – 1992. Copyright © 1963, 1965, 1966, 1967,1970, 1978, 1983 and 1992 by The American Institute of Architects. **All rights reserved.** WARNING: This AIA® Document is protected by U.S. Copyright Law and International Treaties. Unauthorized reproduction or distribution of this AIA® Document, or any portion of it, may result in severe civil and criminal penalties, and will be prosecuted to the maximum extent possible under the law. This document was produced by AIA software at 15:49:49 on 03/02/2006 under Order No.1000210037_1 which expires on 12/26/2006, and is not for resale.
User Notes:

(1016058631)

SECTION 006277 - BUY AMERICA

PART 1 – GENERAL

1.1 Requirements in the Federal-aid Highway Program

A. By signing and submitting this proposal, the bidder certifies that:

1. In accordance with 23 U.S.C, 313 and 23 CFR 635.410, all iron and steel materials permanently incorporated into this project will be produced in the United States and that all manufacturing processes involving these materials will occur in the U.S, except that a minimal amount of foreign steel or iron materials may be used, provided the cost of the foreign materials does not exceed 0.1 percent of the total Contract cost or $2,500.00, whichever is greater. If such minimal amount of foreign steel is used, the Contractor shall maintain a record of the costs to ensure that the allowable limit is not exceeded. This documentation shall be presented to the Department upon request.

2. At the Department's request, I/we will provide manufacturer's/supplier's documentation verifying domestic origin as defined in the Specifications. All Materials accepted on the basis of such Certificate of Compliance may be sampled by the Department and tested at any time. Use of Material on the basis of Certificate of Compliance shall not relieve the Contractor of responsibility for incorporating Material in the Project conforming to the requirements of the Contract. Any Material not conforming to such requirements will be subject to rejection whether in place or not. The Department reserves the right to refuse to permit the use of Material on the basis of Certificate of Compliance.

NOT FOR BID

PART 1 - PRODUCTS (Not Used)

PART 2 - EXECUTION (Not Used)

END OF SECTION 006277

(THIS PAGE LEFT INTENTIONALLY BLANK)

NOT FOR BID

STATE OF DELAWARE

DIVISION OF FACILITIES MANAGEMENT

GENERAL CONDITIONS

TO THE

CONTRACT

The General Conditions of this Contract are as stated in the American Institute of Architects Document AIA A201 (2007 Edition) entitled General Conditions of the Contract for Construction and is part of this project manual as if herein written in full.

NOT FOR BID

NOT FOR BID

(THIS PAGE INTENTIONALLY LEFT BLANK)

SECTION 007313 - SUPPLEMENTARY GENERAL CONDITIONS A201-2007

The following supplements modify the "General Conditions of the Contract for Construction," AIA Document A201-2007. Where a portion of the General Conditions is modified or deleted by the Supplementary Conditions, the unaltered portions of the General Conditions shall remain in effect.

NOT FOR BID

TABLE OF ARTICLES

1. GENERAL PROVISIONS

2. OWNER

3. CONTRACTOR

4. ADMINISTRATION OF THE CONTRACT

5. SUBCONTRACTORS

6. CONSTRUCTION BY OWNER OR BY SEPARATE CONTRACTORS

7. CHANGES IN THE WORK

8. TIME

9. PAYMENTS AND COMPLETION

10. PROTECTION OF PERSONS AND PROPERTY

11. INSURANCE AND BONDS

12. UNCOVERING AND CORRECTION OF WORK

13. MISCELLANEOUS PROVISIONS

14. TERMINATION OR SUSPENSION OF THE CONTRACT

15. CLAIMS AND DISPUTES

NOT FOR BID

ARTICLE 1: GENERAL PROVISIONS

1.1 BASIC DEFINITIONS

1.1.1 THE CONTRACT DOCUMENTS

Delete the last sentence in its entirety and replace with the following:

"The Contract Documents also include Advertisement for Bid, Instructions to Bidder, sample forms, the Bid Form, the Contractor's completed Bid and the Award Letter."

Add the following Paragraph:

1.1.1.1 In the event of conflict or discrepancies among the Contract Documents, the Documents prepared by the State of Delaware, Division of Parks and Recreation shall take precedence over all other documents.

1.2 CORRELATION AND INTENT OF THE CONTRACT DOCUMENTS

Add the following Paragraphs:

1.2.4 In the case of an inconsistency between the Drawings and the Specifications, or within either document not clarified by addendum, the better quality or greater quantity of work shall be provided in accordance with the Architect's interpretation.

1.2.5 The word "PROVIDE" as used in the Contract Documents shall mean "FURNISH AND INSTALL" and shall include, without limitation, all labor, materials, equipment, transportation, services and other items required to complete the Work.

1.2.6 The word "PRODUCT" as used in the Contract Documents means all materials, systems and equipment.

1.5 OWNERSHIP AND USE OF DRAWINGS, SPECIFICATIONS AND OTHER INSTRUMENTS OF SERVICE

Delete Paragraph 1.5.1 in its entirety and replace with the following:

"All pre-design studies, drawings, specifications and other documents, including those in electronic form, prepared by the Architect under this Agreement are, and shall remain, the property of the Owner whether the Project for which they are made is executed or not. Such documents may be used by the Owner to construct one or more like Projects without the approval of, or additional compensation to, the Architect. The Contractor, Subcontractors, Sub-subcontractors and Material or Equipment Suppliers are authorized to use and reproduce applicable portions of the Drawings, Specifications and other documents prepared by the Architect and the Architect's consultants appropriate to and for use in the execution of their Work under the Contract Documents. They are not to be used by the Contractor or any Subcontractor, Sub-subcontractor or Material and Equipment Supplier on other Projects or for

additions to this Project outside the scope of the Work without the specific written consent of the Owner, Architect and Architect's consultants.

The Architect shall not be liable for injury or damage resulting from the re-use of drawings and specifications if the Architect is not involved in the re-use Project. Prior to re-use of construction documents for a Project in which the Architect is not also involved, the Owner will remove from such documents all identification of the original Architect, including name, address and professional seal or stamp."

Delete Paragraph 1.5.2 in its entirety.

ARTICLE 2: OWNER

2.2 INFORMATION AND SERVICES REQUIRED OF THE OWNER

To Subparagraph 2.2.3 – Add the following sentence:

"The Contractor, at their expense shall bear the costs to accurately identify the location of all underground utilities in the area of their excavation and shall bear all cost for any repairs required, owing to failure to accurately identify said utilities."

Delete Subparagraph 2.2.5 in its entirety and substitute the following:

2.2.5 The Contractor shall be furnished free of charge a specified number of copies of the Drawings and Project Manuals. Refer to Specification Section SUMMARY OF WORK. Additional sets will be furnished at the cost of reproduction, postage and handling.

ARTICLE 3: CONTRACTOR

3.2 REVIEW OF CONTRACT DOCUMENTS AND FIELD CONDITIONS BY CONTRACTOR

Amend Paragraph 3.2.2 to state that any errors, inconsistencies or omissions discovered shall be reported to the Architect and Owner immediately.

Delete the third sentence in Paragraph 3.2.3.

3.3 SUPERVISION AND CONSTRUCTION PROCEDURES

Add the following Paragraphs:

3.3.2.1 The Contractor shall immediately remove from the Work, whenever requested to do so by the Owner, any person who is considered by the Owner or Architect to be incompetent or disposed to be so disorderly, or who for any reason is not satisfactory to the Owner, and that person shall not again be employed on the Work without the consent of the Owner or the Architect.

NOT FOR BID

3.3.4 The Contractor must provide suitable storage facilities at the Site for the proper protection and safe storage of their materials. Consult the Owner and the Architect before storing any materials.

3.3.5 When any room is used as a shop, storeroom, office, etc., by the Contractor or Subcontractor(s) during the construction of the Work, the Contractor making use of these areas will be held responsible for any repairs, patching or cleaning arising from such use.

3.4 LABOR AND MATERIALS

Add the Following Paragraphs:

3.4.4 Before starting the work, each Contractor shall carefully examine all preparatory Work that has been executed to receive their Work. Check carefully, by whatever means are required, to insure that its Work and adjacent, related Work, will finish to proper contours, planes and levels. Promptly notify the General Contractor/Construction Manager of any defects or imperfections in preparatory Work which will in any way affect satisfactory completion of its Work. Absence of such notification will be construed as an acceptance of preparatory Work and later claims of defects will not be recognized.

3.4.5 Under no circumstances shall the Contractor's Work proceed prior to preparatory Work proceed prior to preparatory Work having been completely cured, dried and/or otherwise made satisfactory to receive this Work. Responsibility for timely installation of all materials rests solely with the Contractor responsible for that Work, who shall maintain coordination at all times.

3.5 WARRANTY

Add the following Paragraphs:

3.5.1 The Contractor will guarantee all materials and workmanship against original defects, except injury from proper and usual wear when used for the purpose intended, for two years after Acceptance by the Owner, and will maintain all items in perfect condition during the period of guarantee.

3.5.2 Defects appearing during the period of guarantee will be made good by the Contractor at his expense upon demand of the Owner, it being required that all work will be in perfect condition when the period of guarantee will have elapsed.

3.5.3 In addition to the General Guarantee there are other guarantees required for certain items for different periods of time than the two years as above, and are particularly so stated in that part of the specifications referring to same. The said guarantees will commence at the same time as the General Guarantee.

3.5.4 If the Contractor fails to remedy any failure, defect or damage within a reasonable time after receipt of notice, the Owner will have the right to replace, repair, or otherwise remedy the failure, defect or damage at the Contractor's expense.

NOT FOR BID

3.11 DOCUMENTS AND SAMPLES AT THE SITE

Add the following Paragraphs:

3.11.1 During the course of the Work, the Contractor shall maintain a record set of drawings on which the Contractor shall mark the actual physical location of all piping, valves, equipment, conduit, outlets, access panels, controls, actuators, including all appurtenances that will be concealed once construction is complete, etc., including all invert elevations.

3.11.2 At the completion of the project, the Contractor shall obtain a set of reproducible drawings from the Architect, and neatly transfer all information outlined in 3.11.1 to provide a complete record of the as-built conditions.

3.11.3 The Contractor shall provide two (2) prints of the as-built conditions, along with the reproducible drawings themselves, to the Owner and one (1) set to the Architect. In addition, attach one complete set to each of the Operating and Maintenance Instructions/Manuals.

NOT FOR BID

3.13 USE OF SITE

Add the following new subparagraphs:

3.13.1 The Contractor will not load nor permit any part of the structure to be loaded with weight that will endanger the structure.

3.13.2 Storage areas will be defined for the storage of the Contractor's materials and equipment and he shall confine his materials, equipment, and operations of his workmen to such limits as indicated by the Owner. Unless otherwise indicated in the Specifications, the storage areas will be outdoors, and the contractor shall provide whatever shelter is necessary for his storage and fabricating needs. No workmen shall trespass within areas or buildings of the Owner other than those related to the Work of the Contract. The Contractor shall rigidly enforce this regulation. Any materials, equipment or temporary structures belonging to the Contractor shall be moved when so directed by the Owner to permit the execution of the work of others in connection with the Project.

3.17 In the second sentence of the paragraph, insert “indemnify” between “shall” and “hold”.

ARTICLE 4: ADMINISTRATION OF THE CONTRACT

4.2 ADMINISTRATION OF THE CONTRACT

Delete the first sentence of Paragraph 4.2.7 and replace with the following:

The Architect will review and approve or take other appropriate action upon the Contractor's submittals such as Shop Drawings, Product Data and Samples for the purpose of checking for conformance with the Contract Documents.

Delete the second sentence of Paragraph 4.2.7 and replace with the following:

The Architect's action will be taken with such reasonable promptness as to cause no delay in the Work in the activities of the Owner, Contractor or Separate Contractors, while allowing sufficient time in the Owner's professional judgment to permit adequate review.

Add the following Paragraph:

4.2.10.1 There will be no full-time project representative provided by the Owner or Architect on this project.

Add to Paragraph 4.2.13 "and in compliance with all local requirements." to the end of the sentence

NOT FOR BID

ARTICLE 5: SUBCONTRACTORS

5.2 AWARD OF SUBCONTRACTS AND OTHER CONTRACTS FOR PORTIONS OF THE WORK

Delete Paragraph 5.2.3 in its entirety and replace with the following:

5.2.3 If the Owner or Architect has reasonable objection to a person or entity proposed by the Contractor, the Contractor shall propose another to whom the Owner or Architect has no reasonable objection, subject to the statutory requirements of 29 Delaware Code § 6962(d)(10)b.3 and 4.

ARTICLE 6: CONSTRUCTION BY OWNER OR BY SEPARATE CONTRACTORS

6.1 OWNER'S RIGHT TO PERFORM CONSTRUCTION AND TO AWARD SEPARATE CONTRACTS

Delete Paragraph 6.1.4 in its entirety.

6.2 MUTUAL RESPONSIBILITY

6.2.3 In the second sentence, strike the word "shall" and insert the word "may".

Add the following Paragraph to Article 6:

6.4 DEPARTMENT FURNISHED MATERIALS AND EQUIPMENT

6.4.1 If any materials or equipment are to be furnished by the Owner for the Work, they will be so specified in the Contract Documents. Unless otherwise specified, it shall be the Contractor's responsibility to locate, receive, handle and store, if necessary, any

item of Owner furnished material or equipment which he is required by the Contract to install, erect or handle in any way, from the time it is received by the Contractor at the jobsite or other Owner approved location until completion of the Work in accordance with the Contract Documents. Damaged or lost Owner furnished items shall be repaired or replaced by the Contractor without additional cost to the Owner. Refer to Specification Section SUMMARY OF WORK for list of Owner furnished materials and equipment.

ARTICLE 7: CHANGES IN THE WORK

(SEE ARTICLE 7: CHANGES IN WORK IN THE GENERAL REQUIREMENTS)

ARTICLE 8: TIME

8.2 PROGRESS AND COMPLETION

Add the following Paragraphs:

8.2.1.1 Refer to Specification Section SUMMARY OF WORK for Contract time requirements.

8.2.4 If the Work falls behind the Progress Schedule as submitted by the Contractor, the Contractor shall employ additional labor and/or equipment necessary to bring the Work into compliance with the Progress Schedule at no additional cost to the Owner.

8.3 DELAYS AND EXTENSION OF TIME

8.3.1 Strike "arbitration" and insert "remedies at law or in equity".

Add the following Paragraph:

8.3.2.1 The Contractor shall update the status of the suspension, delay, or interruption of the Work with each Application for Payment. (The Contractor shall report the termination of such cause immediately upon the termination thereof.) Failure to comply with this procedure shall constitute a waiver for any claim for adjustment of time or price based upon said cause.

Delete Paragraph 8.3.3 in its entirety and replace with the following:

8.3.3 Except in the case of a suspension of the Work directed by the Owner, an extension of time under the provisions of Paragraph 8.3.1 shall be the Contractor's sole remedy in the progress of the Work and there shall be no payment or compensation to the Contractor for any expense or damage resulting from the delay.

Add the following Paragraph:

NOT FOR BID

8.3.4 By permitting the Contractor to work after the expired time for completion of the project, the Owner does not waive their rights under the Contract.

ARTICLE 9: PAYMENTS AND COMPLETION

9.2 SCHEDULE OF VALUES

Add the following Paragraphs:

9.2.1 The Schedule of Values shall be submitted using AIA Document G702, Continuation Sheet to G703.

9.2.2 The Schedule of Values is to include a line item for Project Closeout Document Submittal. The value of this item is to be no less than 1% of the initial contract amount.

9.3 APPLICATIONS FOR PAYMENT

Add the following Paragraph:

9.3.1.3 Application for Payment shall be submitted on AIA Document G702 "Application and Certificate for Payment", supported by AIA Document G703 "Continuation Sheet". Said Applications shall be fully executed and notarized.

Add the following Paragraphs:

9.3.4 Until Closeout Documents have been received and outstanding items completed the Owner will pay 95% (ninety-five percent) of the amount due the Contractor on account of progress payments.

9.3.5 The Contractor shall provide a current and updated Progress Schedule to the Architect with each Application for Payment. Failure to provide Schedule will be just cause for rejection of Application for Payment.

9.5 DECISIONS TO WITHHOLD CERTIFICATION

Add the following to 9.5.1:

.8 failure to provide a current Progress Schedule;
.9 a lien or attachment is filed;
.10 failure to comply with mandatory requirements for maintaining Record Documents.

9.6 PROGRESS PAYMENTS

Delete Paragraph 9.6.1 in its entirety and replace with the following:

NOT FOR BID

9.6.1 After the Architect has approved and issued a Certificate for Payment, payment shall be made by the Owner within 30 days after Owner's receipt of the Certificate for Payment.

NOT FOR BID

9.7 FAILURE OF PAYMENT

In first sentence, strike "seven" and insert "thirty (30)". Also strike "binding dispute resolution" and insert "remedies at law or in equity".

9.8 SUBSTANTIAL COMPLETION

To Subparagraph 9.8.3 - Add the following sentence:

"If the Architect is required to make more than 2 inspections of the same portion of work, the Contractor shall be responsible for all costs associated with subsequent inspections including but not limited to any Architect's fees."

9.8.5 In the second sentence, strike "shall" and insert "may".

ARTICLE 10: PROTECTION OF PERSONS AND PROPERTY

10.1 SAFETY PRECAUTIONS AND PROGRAMS

Add the following paragraphs:

10.1.1.1.1 Each Contractor shall develop a safety program in accordance with the Occupational Safety and Health Act of 1970. A copy of said plan shall be furnished to the Owner and Architect prior to the commencement of that Contractor's Work.

10.1.2 Each Contractor shall appoint a Safety Representative. Safety Representatives shall be someone who is on site on a full time basis. If deemed necessary by the Owner or Architect, Contractor Safety meetings will be scheduled. The attendance of all Safety Representatives will be required. Minutes will be recorded of said meetings by the Contractor and will be distributed to all parties as well as posted in all job offices/trailers etc.

10.2 SAFETY OF PERSONS AND PROPERTY

Add the following Paragraph:

10.2.4.1 As required in the Hazardous Chemical Act of June 1984, all vendors supplying any material that may be defined as hazardous must provide Material Safety Data Sheets for those products. Any chemical product should be considered hazardous if it has a caution warning on the label relating to a potential physical or health hazard, if it is known to be present in the work place, and if employees may be exposed under normal conditions or in foreseeable emergency situations. Material Safety Data Sheets shall be provided directly to the Owner, along with the shipping slips that include those products.

10.3 HAZARDOUS MATERIALS

Delete Paragraph 10.3.3 in its entirety.

NOT FOR BID

Delete Paragraph 10.3.6 in its entirety.

ARTICLE 11: INSURANCE AND BONDS

11.1 CONTRACTOR'S LIABILITY INSURANCE

11.1.4 Strike "the Owner" immediately following "(1)" and strike "and (2) the Owner as an additional insured for claims caused in whole or in part by the Contractor's negligent acts or omissions during the Contractor's completed operations."

11.2 OWNER'S LIABILITY INSURANCE

Delete Paragraph 11.2 in its entirety.

11.3 PROPERTY INSURANCE

Delete Paragraph 11.3 in its entirety and replace with the following:

11.3 The State will not provide Builder's All Risk Insurance for the Project. The Contractor and all Subcontractors shall provide property coverage for their tools and equipment, as necessary. Any mandatory deductible required by the Contractor's Insurance shall be the responsibility of the Contractor.

11.4 PERFORMANCE BOND AND PAYMENT BOND

11.4.1 Add the following sentence: "The bonds will conform to those forms approved by the Office of Management and Budget."

ARTICLE 12: UNCOVERING AND CORRECTION OF WORK

12.2.2 AFTER SUBSTANTIAL COMPLETION

Add the following Paragraph:

12.2.2.1.1 At any time during the progress of the Work, or in any case where the nature of the defects will be such that it is not expedient to have corrected, the Owner, at its option, will have the right to deduct such sum, or sums, of money from the amount of the Contract as it considers justified to adjust the difference in value between the defective work and that required under contract including any damage to the structure.

12.2.2.1 Strike "one" and insert "two".

12.2.2.2 Strike "one" and insert "two".

12.2.2.3 Strike "one" and insert "two".

12.2.5 In second sentence, strike "one" and insert "two".

NOT FOR BID

NOT FOR BID

ARTICLE 13: MISCELLANEOUS PROVISIONS

13.1 GOVERNING LAW

Strike "except that, if the parties have selected arbitration as the method of binding dispute resolution, the Federal Arbitration Act shall govern. Section 15.4."

13.6 INTEREST

Strike "the date payment is due at such rate as the parties may agree upon in writing or, in the absence thereof, at the legal rate prevailing from time to time at the place where the Project is located." Insert "30 days of presentment of the authorized Certificate of Payment at the annual rate of 12% or 1% per month.

13.7 TIME LIMITS ON CLAIMS

Strike the last sentence.

Add the following Paragraph:

13.8 CONFLICTS WITH FEDERAL STATUTES OR REGULATIONS

13.8.1 If any provision, specifications or requirement of the Contract Documents conflict or is inconsistent with any statute, law or regulation of the government of the United State of America, the Contractor shall notify the Architect and Owner immediately upon discovery.

ARTICLE 14: TERMINATION OR SUSPENSION OF THE CONTRACT

14.4 TERMINATION BY THE OWNER FOR CONVENIENCE

Delete Paragraph 14.4.3 in its entirety and replace with the following:

14.4.3 In case of such termination for the Owner's convenience, the Contractor shall be entitled to receive payment for Work executed, and cost incurred by reason of such termination along with reasonable overhead.

ARTICLE 15: CLAIMS AND DISPUTES

15.1.2 Throughout the Paragraph strike "21" and insert "45".

15.1.6 CLAIMS FOR CONSEQUENTIAL DAMAGES

Delete Paragraph 15.1.6 in its entirety.

15.2 INITIAL DECISION

Delete Paragraph 15.2.5 in its entirety and replace with the following:

15.2.5 The Architect will approve or reject Claims by written decision, which shall state the reasons therefore and shall notify the parties of any change in the Contract Sum or Contract Time or both. The approval or rejection of a Claim by the Architect shall be subject to mediation and other remedies at law or in equity.

Delete Paragraph 15.2.6 and its subparagraphs in their entirety.

15.3 MEDIATION

15.3.1 Strike "binding dispute resolution" and insert "any or all remedies at law or in equity".

15.3.2 In the first sentence, delete "administered by the American Arbitration Association in accordance with its Construction Industry Mediation Procedure in effect on the date of the Agreement," Strike "binding dispute resolution" and insert "remedies at law and in equity".

15.4 ARBITRATION

Delete Paragraph 15.4 and its sub-sections in its entirety.

NOT FOR BID

END OF SECTION 007313

(THIS PAGE INTENTIONALLY LEFT BLANK)

NOT FOR BID

STATE OF DELAWARE
DEPARTMENT OF LABOR
DIVISION OF INDUSTRIAL AFFAIRS
OFFICE OF LABOR LAW ENFORCEMENT
PHONE: (302) 451-3423

Mailing Address:
4425 North Market St. 3rd FL
Wilmington, DE 19802

Located at:
4425 North Market St. 3rd FL
Wilmington, DE 19802

PREVAILING WAGES FOR **HIGHWAY CONSTRUCTION** EFFECTIVE MARCH 15, 2017

NOT FOR BID

CLASSIFICATION	NEW CASTLE	KENT	SUSSEX
BRICKLAYERS	51.99	51.99	15.17
CARPENTERS	5[illegible].8	53.81	42.77
CEMENT FINISHERS	3[illegible]	34.12	27.13
ELECTRICAL LINE WORKERS	23.52	45.39	22.22
ELECTRICIANS	6.85	66.85	66.85
IRON WORKERS	62.35	24.95	26.50
LABORERS	43.30	39.85	39.12
MILLWRIGHTS	16.84	16.34	14.11
PAINTERS	67.07	67.07	67.07
PILEDRIVERS	69.44	24.83	28.17
POWER EQUIPMENT OPERATORS	42.91	41.41	37.92
SHEET METAL WORKERS	23.79	21.23	19.23
TRUCK DRIVERS	35.73	29.51	35.95

CERTIFIED: 10/10/2017 BY: _____
ADMINISTRATOR, OFFICE OF LABOR LAW ENFORCEMENT

NOTE: THESE RATES ARE PROMULGATED AND ENFORCED PURSUANT TO THE PREVAILING WAGE REGULATIONS ADOPTED BY THE DEPARTMENT OF LABOR ON APRIL 3, 1992.

CLASSIFICATIONS OF WORKERS ARE DETERMINED BY THE DEPARTMENT OF LABOR. FOR ASSISTANCE IN CLASSIFYING WORKERS, OR FOR A COPY OF THE REGULATIONS OR CLASSIFICATIONS, PHONE (302) 761-8200

NON-REGISTERED APPRENTICES MUST BE PAID THE MECHANIC'S RATE.

PROJECT: Tri-Valley Trail, Phase II, New Castle County

(THIS PAGE INTENTIONALLY LEFT BLANK)

NOT FOR BID

GENERAL REQUIREMENTS

NOT FOR BID

TABLE OF ARTICLES

1. GENERAL PROVISIONS
2. OWNER
3. CONTRACTOR
4. ADMINISTRATION OF THE CONTRACT
5. SUBCONTRACTORS
6. CONSTRUCTION BY OWNER OR BY SEPARATE CONTRACTORS
7. CHANGES IN THE WORK
8. TIME
9. PAYMENTS AND COMPLETION
10. PROTECTION OF PERSONS AND PROPERTY
11. INSURANCE AND BONDS
12. UNCOVERING AND CORRECTION OF WORK
13. MISCELLANEOUS PROVISIONS
14. TERMINATION OR SUSPENSION OF THE CONTRACT

NOT FOR BID

ARTICLE 1: GENERAL

1.1 CONTRACT DOCUMENTS

1.1.1 The intent of the Contract Documents is to include all items necessary for the proper execution and completion of the Work by the Contractor. The Contract Documents are complementary and what is required by one shall be as binding as if required by all. Performance by the Contractor shall be required to an extent consistent with the Contract Documents and reasonably inferable from them as being necessary to produce the intended results.

1.1.2 Work including material purchases shall not begin until the Contractor is in receipt of a bonafide State of Delaware Purchase Order. Any work performed or material purchases prior to the issuance of the Purchase Order is done at the Contractor's own risk and cost.

1.2 EQUALITY OF EMPLOYMENT OPPORTUNITY ON PUBLIC WORKS

1.2.1 For Public Works Projects financed in whole or in part by state appropriation the Contractor agrees that during the performance of this contract:

1. The Contractor will not discriminate against any employee or applicant for employment because of race, creed, sex, color, sexual orientation, gender identity or national origin. The Contractor will take positive steps to ensure that applicants are employed and that employees are treated during employment without regard to their race, creed, sex, color, sexual orientation, gender identity or national origin. Such action shall include, but not be limited to, the following: employment, upgrading, demotion or transfer; recruitment or recruitment advertising; layoff or termination; rates of pay or other forms of compensation; and selection for training, including apprenticeship. The Contractor agrees to post in conspicuous places available to employees and applicants for employment notices to be provided by the contracting agency setting forth this nondiscrimination clause.

2. The Contractor will, in all solicitations or advertisements for employees placed by or on behalf of the Contractor, state that all qualified applicants will receive consideration for employment without regard to race, creed, sex, color, sexual orientation, gender identity or national origin."

ARTICLE 2: OWNER

(NO ADDITIONAL GENERAL REQUIREMENTS – SEE SUPPLEMENTARY GENERAL CONDITIONS)

ARTICLE 3: CONTRACTOR

3.1 Schedule of Values: The successful Bidder shall within twenty (20) days after receiving notice to proceed with the work, furnish to the Owner a complete schedule of values on the various items comprising the work.

3.2 Subcontracts: Upon approval of Subcontractors, the Contractor shall award their Subcontracts as soon as possible after the signing of their own contract and see that all material, their own and those of their Subcontractors, are promptly ordered so that the work will not be delayed by failure of materials to arrive on time.

3.3 Before commencing any work or construction, the General Contractor is to consult with the Owner as to matters in connection with access to the site and the allocation of Ground Areas for the various features of hauling, storage, etc.

3.4 The Contractor shall supervise and direct the Work, using the Contractor's best skill and attention. The Contractor shall be solely responsible for and have control over construction means, methods, techniques, sequences and procedures and for coordinating all portions of the Work under the Contract, unless the Contract Documents give other specific instructions.

3.5 The Contractor shall enforce strict discipline and good order among the Contractor's employees and other persons carrying out the Contract. The Contractor shall not permit employment of unfit persons or persons not skilled in tasks assigned to them.

3.6 The Contractor warrants to the Owner that materials and equipment furnished will be new and of good quality, unless otherwise permitted, and that the work will be free from defects and in conformance with the Contract Documents. Work not conforming to these requirements, including substitutions not properly approved, may be considered defective. If required by the Owner, the Contractor shall furnish evidence as to the kind and quality of materials and equipment provided.

3.7 Unless otherwise provided, the Contractor shall pay all sales, consumer, use and other similar taxes, and shall secure and pay for required permits, fees, licenses, and inspections necessary for proper execution of the Work.

3.8 The Contractor shall comply with and give notices required by laws, ordinances, rules, regulations, and lawful orders of public authorities bearing on performance of the Work. The Contractor shall promptly notify the Owner if the Drawings and Specifications are observed to be at variance therewith.

3.9 The Contractor shall be responsible to the Owner for the acts and omissions of the Contractor's employees, Subcontractors and their agents and employees, and other persons performing portions of the Work under contract with the Contractor.

3.10 The Contractor shall keep the premises and surrounding area free from accumulation of waste materials or rubbish caused by operations under the Contract. At completion of the Work the Contractor shall remove from and about the Project all waste materials, rubbish, the Contractor's tools, construction equipment, machinery and surplus materials. The Contractor shall be responsible for returning all damaged areas to their original conditions.

3.11 STATE LICENSE AND TAX REQUIREMENTS

3.11.1 Each Contractor and Subcontractor shall be licensed to do business in the State of Delaware and shall pay all fees and taxes due under State laws. In conformance with Section 2503,

NOT FOR BID

Chapter 25, Title 30, Delaware Code, "the Contractor shall furnish the Delaware Department of Finance within ten (10) days after entering into any contract with a contractor or subcontractor not a resident of this State, a statement of total value of such contract or contracts together with the names and addresses of the contracting parties."

3.12 The Contractor shall comply with all requirements set forth in Section 6962, Chapter 69, Title 29 of the Delaware Code.

3.13 During the contract Work, the Contractor and each listed Subcontractor, shall implement an Employee Drug Testing Program in accordance with OMB Regulation 4104- "Regulations for the Drug Testing of Contractor and Subcontractor Employees Working on "Large Public Works Projects". "Large Public Works" is based upon the current threshold required for bidding Public Works as set by the Purchasing and Contracting Advisory Council.

ARTICLE 4: ADMINISTRATION OF THE CONTRACT

4.1 CONTRACT SURETY

4.1.1 PERFORMANCE BOND AND LABOR AND MATERIAL PAYMENT BOND

4.1.2 All bonds will be required as follows unless specifically waived elsewhere in the Bidding Documents.

4.1.3 Contents of Performance Bonds – The bond shall be in the form approved by the Office of Management and Budget. The bond shall be conditioned upon the faithful compliance and performance by the successful bidder of each and every term and condition of the contract and the proposal, plans, specifications, and bid documents thereof. Each term and condition shall be met at the time and in the manner prescribed by the Contract, Bid documents and the specifications, including the payment in full to every person furnishing materiel or performing labor in the performance of the Contract, of all sums of money due the person for such labor and material. (The bond shall also contain the successful bidder's guarantee to indemnify and save harmless the State and the agency from all costs, damages and expenses growing out of or by reason of the Contract in accordance with the Contract.)

4.1.4 Invoking a Performance Bond – The agency may, when it considers that the interest of the State so require, cause judgement to be confessed upon the bond.

4.1.5 Within twenty (20) days after the date of notice of award of contract, the Bidder to whom the award is made shall furnish a Performance Bond and Labor and Material Payment Bond, each equal to the full amount of the Contract price to guarantee the faithful performance of all terms, covenants and conditions of the same. The bonds are to be issued by an acceptable Bonding Company licensed to do business in the State of Delaware and shall be issued in duplicate.

4.1.6 Performance and Payment Bonds shall be maintained in full force (warranty bond) for a period of two (2) years after the date of the Certificate for Final Payment. The Performance Bond shall guarantee the satisfactory completion of the Project and that the Contractor will make good any faults or defects in his work which may develop during the period of said guarantees as a result of improper or defective workmanship, material or apparatus, whether furnished by themselves or their Sub-Contractors. The Payment Bond shall guarantee that the Contractor

NOT FOR BID

shall pay in full all persons, firms or corporations who furnish labor or material or both labor and material for, or on account of, the work included herein. The bonds shall be paid for by this Contractor. The Owner shall have the right to demand that the proof parties signing the bonds are duly authorized to do so.

4.2 FAILURE TO COMPLY WITH CONTRACT

4.2.1 If any firm entering into a contract with the State or Agency that neglects or refuses to perform or fails to comply with the terms thereof, the Agency which signed the Contract may terminate the Contract and proceed forward a new contract in accordance with this Chapter 69, Title 29 of the Delaware Code or may require the Surety on the Performance Bond to complete the Contract in accordance with the terms of the Performance Bond. Nothing herein shall preclude the Agency from pursuing additional remedies as otherwise provided by law.

4.3 CONTRACT INSURANCE AND CONTRACT LIABILITY

4.3.1 In addition to the bond requirements stated in the Bid Documents, each successful Bidder shall purchase adequate insurance for the performance of the Contract and, by submission of a Bid, agrees to indemnify and save harmless and to defend all legal or equitable actions brought against the State, any Agency, officer and/or employee of the State, for and from all claims of liability which is or may be the result of the successful Bidder's actions during the performance of the Contract.

4.3.2 The purchase or nonpurchase of such insurance or the involvement of the successful Bidder in any legal or equitable defense of any action brought against the successful Bidder based upon work performed pursuant to the Contract will not waive any defense which the State, its agencies and their respective officers, employees and agents might otherwise have against such claims, specifically including the defense of sovereign immunity, where applicable, and by the terms of this section, the State and all agencies, officers and employees thereof shall not be financially responsible for the consequences of work performed, pursuant to said contract.

4.4 RIGHT TO AUDIT RECORDS

4.4.1 The Owner shall have the right to audit the books and records of a Contractor or any Subcontractor under any Contract or Subcontract to the extent that the books and records relate to the performance of the Contract or Subcontract.

4.4.2 Said books and records shall be maintained by the Contractor for a period of seven (7) years from the date of final payment under the Prime Contract and by the Subcontractor for a period of seven (7) years from the date of final payment under the Subcontract.

ARTICLE 5: SUBCONTRACTORS

5.1 SUBCONTRACTING REQUIREMENTS

NOT FOR BID

5.1.1 All contracts for the construction, reconstruction, alteration or repair of any public building (not a road, street or highway) shall be subject to the following provisions:

1. A contract shall be awarded only to a Bidder whose Bid is accompanied by a statement containing, for each Subcontractor category, the name and address (city or town and State only – street number and P.O. Box addresses not required) of the subcontractor whose services the Bidder intends to use in performing the Work and providing the material for such Subcontractor category.

2. A Bid will not be accepted nor will an award of any Contract be made to any Bidder which, as the Prime Contractor, has listed itself as the Subcontractor for any Subcontractor unless:

   A. It has been established to the satisfaction of the awarding Agency that the Bidder has customarily performed the specialty work of such Subcontractor category by artisans regularly employed by the Bidder's firm;

   B. That the Bidder is duly licensed by the State to engage in such specialty work, if the State requires licenses; and

   C. That the Bidder is recognized in the industry as a bona fide Subcontractor or Contractor in such specialty work and Subcontractor category.

5.1.2 The decision of the awarding Agency as to whether a Bidder who list itself as the Subcontractor for a Subcontractor category shall be final and binding upon all Bidders, and no action of any nature shall lie against any awarding agency or its employees or officers because of its decision in this regard.

5.1.3 After such a Contract has been awarded, the successful Bidder shall not substitute another Subcontractor for any Subcontractor whose name was set forth in the statement which accompanied the Bid without the written consent of the awarding Agency.

5.1.4 No Agency shall consent to any substitution of Subcontractors unless the Agency is satisfied that the Subcontractor whose name is on the Bidders accompanying statement:

A. Is unqualified to perform the work required;

B. Has failed to execute a timely reasonable Subcontract;

C. Has defaulted in the performance on the portion of the work covered by the Subcontract; or

D. Is no longer engaged in such business.

5.1.5 Should a Bidder be awarded a contract, such successful Bidder shall provide to the agency the taxpayer identification license numbers of such subcontractors. Such numbers shall be provided on the later of the date on which such subcontractor is required to be identified or

NOT FOR BID

the time the contract is executed. The successful Bidder shall provide to the agency to which it is contracting, within 30 days of entering into such public works contract, copies of all Delaware Business licenses of subcontractors and/or independent contractors that will perform work for such public works contract. However, if a subcontractor or independent contractor is hired or contracted more than 20 days after the Bidder entered the public works contract the Delaware Business license of such subcontractor or independent contractor shall be provided to the agency within 10 days of being contracted or hired.

5.2 PENALTY FOR SUBSTITUTION OF SUBCONTRACTORS

5.2.1 Should the Contractor fail to utilize any or all of the Subcontractors in the Contractor's Bid statement in the performance of the Work on the public bidding, the Contractor shall be penalized in the amount of (project specific amount*). The Agency may determine to deduct payments of the penalty from the Contractor or have the amount paid directly to the Agency. Any penalty amount assessed against the Contractor may be remitted or refunded, in whole or in part, by the Agency awarding the Contract, only if it is established to the satisfaction of the Agency that the Subcontractor in question has defaulted or is no longer engaged in such business. No claim for the remission or refund of any penalty shall be granted unless an application is filed within one year after the liability of the successful Bidder accrues. All penalty amounts assessed and not refunded or remitted to the contractor shall be reverted to the State.

*one (1) percent of contract amount not to exceed $10,000

5.3 ASBESTOS ABATEMENT

5.3.1 The selection of any Contractor to perform asbestos abatement for State-funded projects shall be approved by the Office of Management and Budget, Division of Facilities Management pursuant to Chapter 78 of Title 16.

5.4 STANDARDS OF CONSTRUCTION FOR THE PROTECTION OF THE PHYSICALLY HANDICAPPED

5.4.1 All Contracts shall conform with the standard established by the Delaware Architectural Accessibility Board unless otherwise exempted by the Board.

5.5 CONTRACT PERFORMANCE

5.5.1 Any firm entering into a Public Works Contract that neglects or refuses to perform or fails to comply with its terms, the Agency may terminate the Contract and proceed to award a new Contract or may require the Surety on the Performance Bond to complete the Contract in accordance with the terms of the Performance Bond.

ARTICLE 6: CONSTRUCTION BY OWNER OR SEPARATE CONTRACTORS

6.1 The Owner reserves the right to simultaneously perform other construction or operations related to the Project with the Owner's own forces, and to award separate contracts in connection with other portions of the Project or other Projects at the same site.

NOT FOR BID

6.2 The Contractor shall afford the Owner and other Contractors reasonable opportunity for access and storage of materials and equipment, and for the performance of their activities, and shall connect and coordinate their activities with other forces as required by the Contract Documents.

ARTICLE 7: CHANGES IN THE WORK

7.1 The Owner, without invalidating the Contract, may order changes in the Work consisting of Additions, Deletions, Modifications or Substitutions, with the Contract Sum and Contract completion date being adjusted accordingly. Such changes in the Work shall be authorized by written Change Order signed by the Professional, as the duly authorized agent, the Contractor and the Owner.

7.2 The Contract Sum and Contract Completion Date shall be adjusted only by a fully executed Change Order.

7.3 The additional cost or credit to the Owner resulting from a change in the Work shall be by mutual agreement of the Owner, Contractor and the Architect. In all cases, this cost or credit shall be based on the 'DPE' wages required and the "invoice price" of the materials/equipment needed.

7.3.1 "DPE" shall be defined to mean "direct personnel expense". Direct payroll expense includes direct salary plus customary fringe benefits (prevailing wage rates) and documented statutory costs such as workman's compensation insurance, Social Security/Medicare, and unemployment insurance (a maximum multiplier of 1.35 times DPE).

7.3.2 "Invoice price" of materials/equipment shall be defined to mean the actual cost of materials and/or equipment that is paid by the Contractor, (or subcontractor), to a material distributor, direct factory vendor, store, material provider, or equipment leasing entity. Rates for equipment that is leased and/or owned by the Contractor or subcontractor(s) shall not exceed those listed in the latest version of the "Means Building Construction Cost Data" publication.

7.3.3 In addition to the above, the General Contractor is allowed a fifteen percent (15%) markup for overhead and profit for additional work performed by the General Contractor's own forces. For additional subcontractor work, the Subcontractor is allowed a fifteen (15) percent overhead and profit on change order work above and beyond the direct costs stated previously. To this amount, the General Contractor will be allowed a mark-up not exceeding seven and one half percent (7.5%) on the subcontractors work. These mark-ups shall include all costs including, but not limited to: overhead, profit, bonds, insurance, supervision, etc. No markup is permitted on the work of the subcontractors subcontractor. No additional costs shall be allowed for changes related to the Contractor's onsite superintendent/staff, or project manager, unless a change in the work changes the project duration and is identified by the CPM schedule. There will be no other costs associated with the change order.

ARTICLE 8: TIME

NOT FOR BID

NOT FOR BID

8.1 Time limits, if any, are as stated in the Project Manual. By executing the Agreement, the Contractor confirms that the stipulated limits are reasonable, and that the Work will be completed within the anticipated time frame.

8.2 If progress of the Work is delayed at any time by changes ordered by the Owner, by labor disputes, fire, unusual delay in deliveries, abnormal adverse weather conditions, unavoidable casualties or other causes beyond the Contractor's control, the Contract Time shall be extended for such reasonable time as the Owner may determine.

8.3 Any extension of time beyond the date fixed for completion of the construction and acceptance of any part of the Work called for by the Contract, or the occupancy of the building by the Owner, in whole or in part, previous to the completion shall not be deemed a waiver by the Owner of his right to annul or terminate the Contract for abandonment or delay in the matter provided for, nor relieve the Contractor of full responsibility.

8.4 SUSPENSION AND DEBARMENT

8.4.1 Per Section 6962(d)(14), Title 29, Delaware Code, "Any Contractor who fails to perform a public works contract or complete a public works project within the time schedule established by the Agency in the Invitation To Bid, may be subject to Suspension or Debarment for one or more of the following reasons: a) failure to supply the adequate labor supply ratio for the project; b) inadequate financial resources; or, c) poor performance on the Project."

8.4.2 "Upon such failure for any of the above stated reasons, the Agency that contracted for the public works project may petition the Director of the Office of Management and Budget for Suspension or Debarment of the Contractor. The Agency shall send a copy of the petition to the Contractor within three (3) working days of filing with the Director. If the Director concludes that the petition has merit, the Director shall schedule and hold a hearing to determine whether to suspend the Contractor, debar the Contractor or deny the petition. The Agency shall have the burden of proving, by a preponderance of the evidence, that the Contractor failed to perform or complete the public works project within the time schedule established by the Agency and failed to do so for one or more of the following reasons: a) failure to supply the adequate labor supply ratio for the project; b) inadequate financial resources; or, c) poor performance on the project. Upon a finding in favor of the Agency, the Director may suspend a Contractor from Bidding on any project funded, in whole or in part, with public funds for up to 1 year for a first offense, up to 3 years for a second offense and permanently debar the Contractor for a third offense. The Director shall issue a written decision and shall send a copy to the Contractor and the Agency. Such decision may be appealed to the Superior Court within thirty (30) days for a review on the record."

8.5 RETAINAGE

8.5.1 Per Section 6962(d)(5) a.3, Title 29, Delaware Code: The Agency may at the beginning of each public works project establish a time schedule for the completion of the project. If the project is delayed beyond the completion date due to the Contractor's failure to meet their responsibilities, the Agency may forfeit, at its discretion, all or part of the Contractor's retainage.

8.5.2 This forfeiture of retainage also applies to the timely completion of the punchlist. A punchlist will only be prepared upon the mutual agreement of the Owner, Architect and Contractor. Once the punchlist is prepared, all three parties will by mutual agreement, establish a schedule for its completion. Should completion of the punchlist be delayed beyond the established date due to the Contractor's failure to meet their responsibilities, the Agency may hold permanently, at its discretion, all or part of the Contractor's retainage.

ARTICLE 9: PAYMENTS AND COMPLETION

9.1 APPLICATION FOR PAYMENT

9.1.1 Applications for payment shall be made upon AIA Document G702. There will be a five percent (5%) retainage on all Contractor's monthly invoices until completion of the project. This retainage may become payable upon receipt of all required closeout documentation, provided all other requirements of the Contract Documents have been met.

9.1.2 A date will be fixed for the taking of the monthly account of work done. Upon receipt of Contractor's itemized application for payment, such application will be audited, modified, if found necessary, and approved for the amount. Statement shall be submitted to the Owner.

9.1.3 Section 6516, Title 29 of the Delaware Code annualized interest is not to exceed 12% per annum beginning thirty (30) days after the "presentment" (as opposed to the date) of the invoice.

NOT FOR BID

9.2 PARTIAL PAYMENTS

9.2.1 Any public works Contract executed by any Agency may provide for partial payments at the option of the Owner with respect to materials placed along or upon the sites or stored at secured locations, which are suitable for use in the performance of the contract.

9.2.2 When approved by the agency, partial payments may include the values of tested and acceptable materials of a nonperishable or noncontaminative nature which have been produced or furnished for incorporation as a permanent part of the work yet to be completed, provided acceptable provisions have been made for storage.

9.2.2.1 Any allowance made for materials on hand will not exceed the delivered cost of the materials as verified by invoices furnished by the Contractor, nor will it exceed the contract bid price for the material complete in place.

9.2.3 If requested by the Agency, receipted bills from all Contractors, Subcontractors, and material, men, etc., for the previous payment must accompany each application for payment. Following such a request, no payment will be made until these receipted bills have been received by the Owner.

9.3 SUBSTANTIAL COMPLETION

9.3.1 When the building has been made suitable for occupancy, but still requires small items of miscellaneous work, the Owner will determine the date when the project has been substantially completed.

9.3.2 If, after the Work has been substantially completed, full completion thereof is materially delayed through no fault of the Contractor, and without terminating the Contract, the Owner may make payment of the balance due for the portion of the Work fully completed and accepted. Such payment shall be made under the terms and conditions governing final payment that it shall not constitute a waiver of claims.

9.3.3 On projects where commissioning is included, the commissioning work as defined in the specifications must be complete prior to the issuance of substantial completion.

9.4 FINAL PAYMENT

9.4.1 Final payment, including the five percent (5%) retainage if determined appropriate, shall be made within thirty (30) days after the Work is fully completed and the Contract fully performed and provided that the Contractor has submitted the following closeout documentation (in addition to any other documentation required elsewhere in the Contract Documents):

9.4.1.1 Evidence satisfactory to the Owner that all payrolls, material bills, and other indebtedness connected with the work have been paid,

9.4.1.2 An acceptable RELEASE OF LIENS,

NOT FOR BID

9.4.1.3 Copies of all applicable warranties,

9.4.1.4 As-built drawings,

9.4.1.5 Operations and Maintenance Manuals,

9.4.1.6 Instruction Manuals,

9.4.1.7 Consent of Surety to final payment.

9.4.1.8 The Owner reserves the right to retain payments, or parts thereof, for its protection until the foregoing conditions have been complied with, defective work corrected and all unsatisfactory conditions remedied.

NOT FOR BID

ARTICLE 10: PROTECTION OF PERSONS AND PROPERTY

10.1 The Contractor shall be responsible for initiating, maintaining, and supervising all safety precautions and programs in connection with the performance of the Contract. The Contractor shall take all reasonable precautions to prevent damage, injury or loss to: workers, persons nearby who may be affected, the Work, materials and equipment to be incorporated, and existing property at the site or adjacent thereto. The Contractor shall give notices and comply with applicable laws ordinances, rules regulations, and lawful orders of public authorities bearing on the safety of persons and property and their protection from injury, damage, or loss. The Contractor shall promptly remedy damage and loss to property at the site caused in whole or in part by the Contractor, a Subcontractor, or anyone directly or indirectly employed by any of them, or by anyone for whose acts they may be liable.

10.2 The Contractor shall notify the Owner in the event any existing hazardous material such as lead, PCBs, asbestos, etc. is encountered on the project. The Owner will arrange with a qualified specialist for the identification, testing, removal, handling and protection against exposure or environmental pollution, to comply with applicable regulation laws and ordinances. The Contractor and Architect will not be required to participate in or to perform this operation. Upon completion of this work, the Owner will notify the Contractor and Architect in writing the area has been cleared and approved by the authorities in order for the work to proceed. The Contractor shall attach documentation from the authorities of said approval.

10.3 As required in the Hazardous Chemical Information Act of June 1984, all vendors supplying any materials that may be defined as hazardous, must provide Material Safety Data Sheets for those products. Any chemical product should be considered hazardous if it has a warning caution on the label relating to a potential physical or health hazard, if it is known to be present in the work place, and if employees may be exposed under normal conditions or in any foreseeable emergency situation. Material Safety Data Sheets <u>must</u> be provided <u>directly to the Owner</u> along with the shipping slips that include those products.

10.4 The Contractor shall certify to the Owner that materials incorporated into the Work are free of all asbestos. This certification may be in the form of Material Safety Data Sheet (MSDS)

provided by the product manufacturer for the materials used in construction, as specified or as provided by the Contractor.

ARTICLE 11: INSURANCE AND BONDS

11.1 The Contractor shall carry all insurance required by law, such as Unemployment Insurance, etc. The Contractor shall carry such insurance coverage as they desire on their own property such as a field office, storage sheds or other structures erected upon the project site that belong to them and for their own use. The Subcontractors involved with this project shall carry whatever insurance protection they consider necessary to cover the loss of any of their personal property, etc.

11.2 Upon being awarded the Contract, the Contractor shall obtain a minimum of two (2) copies of all required insurance certificates called for herein, and submit one (1) copy of each certificate, to the Owner, within 20 days of contract award.

11.3 Bodily Injury Liability and Property Damage Liability Insurance shall, in addition to the coverage included herein, include coverage for injury to or destruction of any property arising out of the collapse of or structural injury to any building or structure due to demolition work and evidence of these coverages shall be filed with and approved by the Owner.

11.4 The Contractor's Property Damage Liability Insurance shall, in addition to the coverage noted herein, include coverage on all real and personal property in their care, custody and control damaged in any way by the Contractor or their Subcontractors during the entire construction period on this project.

11.5 Builders Risk (including Standard Extended Coverage Insurance) on the existing building during the entire construction period, shall not be provided by the Contractor under this contract. The Owner shall insure the existing building and all of its contents and all this new alteration work under this contract during entire construction period for the full insurable value of the entire work at the site. Note, however, that the Contractor and their Subcontractors shall be responsible for insuring building materials (installed and stored) and their tools and equipment whenever in use on the project, against fire damage, theft, vandalism, etc.

11.6 Certificates of the insurance company or companies stating the amount and type of coverage, terms of policies, etc., shall be furnished to the Owner, within 20 days of contract award.

11.7 The Contractor shall, at their own expense, (in addition to the above) carry the following forms of insurance:

11.7.1 <u>Contractor's Contractual Liability Insurance</u>

Minimum coverage to be:

Bodily Injury	$500,000	for each person
	$1,000,000	for each occurrence
	$1,000,000	aggregate

NOT FOR BID

Property Damage	$500,000	for each occurrence
	$1,000,000	aggregate

11.7.2 Contractor's Protective Liability Insurance

Minimum coverage to be:

Bodily Injury	$500,000	for each person
	$1,000,000	for each occurrence
	$1,000,000	aggregate
Property Damage	$500,000	for each occurrence
	$500,000	aggregate

11.7.3 Automobile Liability Insurance

Minimum coverage to be:

Bodily Injury	$1,000,000	for each person
	$1,000,000	for each occurrence
Property Damage	$500,000	per accident

NOT FOR BID

11.7.4 Prime Contractor's and Subcontractors' policies shall include contingent and contractual liability coverage in the same minimum amounts as 11.7.1 above.

11.7.5 Workmen's Compensation (including Employer's Liability):

11.7.5.1 Minimum Limit on employer's liability to be as required by law.

11.7.5.2 Minimum Limit for all employees working at one site.

11.7.6 Certificates of Insurance must be filed with the Owner guaranteeing fifteen (15) days prior notice of cancellation, non-renewal, or any change in coverages and limits of liability shown as included on certificates.

11.7.7 Social Security Liability

11.7.7.1 With respect to all persons at any time employed by or on the payroll of the Contractor or performing any work for or on their behalf, or in connection with or arising out of the Contractor's business, the Contractor shall accept full and exclusive liability for the payment of any and all contributions or taxes or unemployment insurance, or old age retirement benefits, pensions or annuities now or hereafter imposed by the Government of the United States and the State or political subdivision thereof, whether the same be measured by wages, salaries or other remuneration paid to such persons or otherwise.

11.7.7.2 Upon request, the Contractor shall furnish Owner such information on payrolls or employment records as may be necessary to enable it to fully comply with the law imposing the aforesaid contributions or taxes.

11.7.7.3 If the Owner is required by law to and does pay any and/or all of the aforesaid contributions or taxes, the Contractor shall forthwith reimburse the Owner for the entire amount so paid by the Owner.

NOT FOR BID

ARTICLE 12: UNCOVERING AND CORRECTION OF WORK

12.1 The Contractor shall promptly correct work rejected by the Owner or failing to conform to the requirements of the Contract Documents, whether observed before or after Substantial Completion and whether or not fabricated, installed or completed, and shall correct any Work found to be not in accordance with the requirements of the Contract Documents within a period of two years from the date of Substantial Completion, or by terms of an applicable special warranty required by the Contract Documents. The provisions of this Article apply to work done by Subcontractors as well as to Work done by direct employees of the Contractor.

12.2 At any time during the progress of the work, or in any case where the nature of the defects shall be such that it is not expedient to have them corrected, the Owner, at their option, shall have the right to deduct such sum, or sums, of money from the amount of the contract as they consider justified to adjust the difference in value between the defective work and that required under contract including any damage to the structure.

ARTICLE 13: MISCELLANEOUS PROVISIONS

13.1 CUTTING AND PATCHING

13.1.1 The Contractor shall be responsible for all cutting and patching. The Contractor shall coordinate the work of the various trades involved.

13.2 DIMENSIONS

13.2.1 All dimensions shown shall be verified by the Contractor by actual measurements at the project site. Any discrepancies between the drawings and specifications and the existing conditions shall be referred to the Owner for adjustment before any work affected thereby has been performed.

13.3 LABORATORY TESTS

13.3.1 Any specified laboratory tests of material and finished articles to be incorporated in the work shall be made by bureaus, laboratories or agencies approved by the Owner and reports of such tests shall be submitted to the Owner. The cost of the testing shall be paid for by the Contractor.

13.3.2 The Contractor shall furnish all sample materials required for these tests and shall deliver same without charge to the testing laboratory or other designated agency when and where directed by the Owner.

13.4 ARCHAEOLOGICAL EVIDENCE

13.4.1 Whenever, in the course of construction, any archaeological evidence is encountered on the surface or below the surface of the ground, the Contractor shall notify the authorities of the Delaware Archaeological Board and suspend work in the immediate area for a reasonable time to permit those authorities, or persons designated by them, to examine the area and ensure the proper removal of the archaeological evidence for suitable preservation in the State Museum.

13.5 GLASS REPLACEMENT AND CLEANING

13.5.1 The General Contractor shall replace without expense to the Owner all glass broken during the construction of the project. If job conditions warrant, at completion of the job the General Contractor shall have all glass cleaned and polished.

13.6 WARRANTY

13.6.1 For a period of two (2) years from the date of substantial completion, as evidenced by the date of final acceptance of the work, the contractor warrants that work performed under this contract conforms to the contract requirements and is free of any defect of equipment, material or workmanship performed by the contractor or any of his subcontractors or suppliers. However, manufacturer's warranties and guarantees, if for a period longer than two (2) years, shall take precedence over the above warranties. The contractor shall remedy, at his own expense, any such failure to conform or any such defect. The protection of this warranty shall be included in the Contractor's Performance Bond.

ARTICLE 14: TERMINATION OF CONTRACT

14.1 If the Contractor defaults or persistently fails or neglects to carry out the Work in accordance with the Contract Documents or fails to perform a provision of the Contract, the Owner, after seven days written notice to the Contractor, may make good such deficiencies and may deduct the cost thereof from the payment then or thereafter due the Contractor. Alternatively, at the Owner's option, and the Owner may terminate the Contract and take possession of the site and of all materials, equipment, tools, and machinery thereon owned by the Contractor and may finish the Work by whatever method the Owner may deem expedient. If the costs of finishing the Work exceed any unpaid compensation due the Contractor, the Contractor shall pay the difference to the Owner.

14.2 "If the continuation of this Agreement is contingent upon the appropriation of adequate state, or federal funds, this Agreement may be terminated on the date beginning on the first fiscal year for which funds are not appropriated or at the exhaustion of the appropriation. The Owner may terminate this Agreement by providing written notice to the parties of such non-appropriation. All payment obligations of the Owner will cease upon the date of termination. Notwithstanding the foregoing, the Owner agrees that it will use its best efforts to obtain approval of necessary funds to continue the Agreement by taking appropriate action to request adequate funds to continue the Agreement."

NOT FOR BID

EMPLOYEE DRUG TESTING REPORT FORM
Period Ending:_____

4104 Regulations for the Drug Testing of Contractor and Subcontractor Employees Working on Large Public Works Projects requires that Contractors and Subcontractors who work on Large Public Works Contracts funded all or in part with public funds submit Testing Report Forms to the Owner no less than quarterly.

NOT FOR BID

Project Number: _____

Project Name: _____

Contractor/Subcontractor Name: _____

Contractor/Subcontractor Address: _____
_____
_____

Number of employees who worked on the jobsite during the report period:_____

Number of employees subject to random testing during the report period:_____

Number of Negative Results _____ Number of Positive Results _____

Action taken on employee(s) in response to a failed or positive random test:
_____
_____
_____

Authorized Representative of Contractor/Subcontractor: _____
(typed or printed)

Authorized Representative of Contractor/Subcontractor: _____
(signature)

Date: _____

EMPLOYEE DRUG TESTING
REPORT OF POSITIVE RESULTS

4104 Regulations for the Drug Testing of Contractor and Subcontractor Employees Working on Large Public Works Projects requires that Contractors and Subcontractors who work on Large Public Works Contracts funded all or in part with public funds to notify the Owner in writing of a positive random drug test.

NOT FOR BID

Project Number: _____

Project Name: _____

Contractor/Subcontractor Name: _____

Contractor/Subcontractor Address: _____
_____
_____

Name of employee with positive test result:_____

Last 4 digits of employee SSN: _____

Date test results received:_____

Action taken on employee in response to a positive test result:
_____
_____
_____

Authorized Representative of Contractor/Subcontractor: _____
(typed or printed)

Authorized Representative of Contractor/Subcontractor: _____
(signature)

Date: _____

This form shall be sent by mail to the Owner within 24 hours of receipt of test results.

Enclose this test results form in a sealed envelope with the notation "Drug Testing Form – DO NOT OPEN" on the face thereof and place in a separate mailing envelope.

NOT FOR BID

SECTION 011000 – SUMMARY

PART 1 - GENERAL

1.1 RELATED DOCUMENTS

A. Drawings and general provisions of the Contract, including General and Supplementary Conditions and other Division 01 Specification Sections, apply to this Section.

1.2 SUMMARY

A. Section Includes:

1. Project information.
2. Work covered by Contract Documents.
3. Work under separate contract.
4. Allowances.
5. Alternates.
6. Unit Prices.
7. Applications for Payment.
8. Owner Supplied Construction Documents.
9. Coordination.
10. Phased construction.
11. Access to site.
12. Coordination with occupants.
13. Work restrictions.
14. Specification and drawing conventions.
15. Field Engineering.
16. References and Standards.
17. Miscellaneous provisions.

B. Related Requirements:

1. Section 015000 "Temporary Facilities and Controls" for limitations and procedures governing temporary use of Owner's facilities.

1.3 PROJECT INFORMATION

A. Project Identification: Tri-Valley Trail, Phase II.

1. Project Location: Newark, Delaware 19711.

B. Owner: State of Delaware, Division of Natural Resources and Environmental Control, Parks and Recreation, 89 Kings Highway, Dove DE 19901.

C. Architect/Engineer's Identification: The Contract Documents, dated TRI-VALLEY TRAIL, PHASE II, were prepared for this Project by Century Engineering, Inc.

NOT FOR BID

1.4 WORK COVERED BY CONTRACT DOCUMENTS

A. The Work of Project is defined by the Contract Documents and consists of the following:

1. Construction of a new, 5,965+/- long, 8-foot wide asphalt multi-use trail and bridge.

B. Type of Contract:

1. Project will be constructed under a single, lump sum prime contract.

1.5 WORK UNDER SEPARATE CONTRACTS

A. General: Cooperate fully with separate contractors so work on those contracts may be carried out smoothly, without interfering with or delaying work under this Contract or other contracts. Coordinate the Work of this Contract with work performed under separate contracts as it will have an impact on the General Contractor's scope of work. The General Contractor shall allow the separate contractors access to scaffolding and/or high reaches.

1. An archeological survey has been completed by the State for this project. No hazardous material abatement is anticipated for this project.
2. Items noted "NIC" (Not in Contract) will be furnished and installed by others.

1.6 UNIT PRICES

A. Unit Prices quoted on the Bid form will be exercised as Owner option.

B. Coordinate related work and modify surrounding work affected by accepted unit prices as required to complete the Work.

C. Schedule of Unit Prices: Refer to Section 012200 Unit Prices.

1.7 APPLICATIONS FOR PAYMENT

A. Submit three (3) originals of each application under procedures of Section 012900 Payment Procedures.

B. Content and Format: Use the Project Manual table of contents to develop the Schedule of Values.

NOT FOR BID

1.8 OWNER SUPPLIED CONSTRUCTION DOCUMENTS

A. The Contractor will be furnished, free of charge, five (5) copies of the drawings and Project Manuals (or less if requested). Additional sets will be furnished at the cost of reproduction, postage and handling.

1.9 COORDINATION

A. Coordinate Work of the various sections of Specifications to assure efficient and orderly sequence of installation of construction elements, with provisions for accommodating items installed later.

B. Verify characteristics of elements of interrelated operating equipment are compatible; coordinate Work of various sections having interdependent responsibilities for installing, connecting to, and placing in service, such equipment.

C. Coordinate space requirements and installation of mechanical, electrical and plumbing work which are indicated diagrammatically on Drawings. Follow routing shown for pipes, ducts, and conduits, as closely as practicable; make runs parallel with lines of building. Utilize spaces efficiently to maximize accessibility for other installations, for maintenance, and for repairs.

D. In finished areas (except as otherwise shown), conceal pipes, ducts, and wiring in the construction. Coordinate locations of fixtures and outlets with finish elements.

E. Execute cutting and patching to integrate elements of Work, uncover ill-timed defective and non-conforming work, provide openings for penetrations of existing surfaces, and provide samples for testing. Seal penetrations through floors, walls, and ceilings.

1.10 ACCESS TO SITE

A. General: Contractor shall have partial use of Project site for construction operations as indicated on Drawings by the Contract limits and as indicated by requirements of this Section.

B. Use of Site: Limit use of Project site to areas within the Contract limits. Do not disturb portions of Project site beyond areas in which the Work is indicated.

1. Limits: Confine construction operations to the areas as indicated. The site is currently open to the public. The contractor shall barricade the construction areas to prevent access by the public.
2. Driveways, Walkways and Entrances: Keep public roads, public parking, driveways and entrances outside of the work area serving premises clear and available to Owner, Owner's employees, emergency vehicles and general public at all times. Do not use these areas for parking or storage of materials.

   a. Schedule deliveries to minimize use of driveways and entrances by construction operations.

b. Schedule deliveries to minimize space and time requirements for storage of materials and equipment on-site.

3. The adjacent building areas, site and properties are occupied and shall not be disturbed.

NOT FOR BID

1.11 COORDINATION WITH OCCUPANTS

A. Full Owner Occupancy: Owner will occupy site during entire construction period. Cooperate with Owner during construction operations to minimize conflicts and facilitate Owner usage. Perform the Work so as not to interfere with Owner's day-to-day operations. Maintain existing exits unless otherwise indicated.

1. Maintain access to existing walkways, entrances, corridors, stairs and other adjacent occupied or used facilities. Do not close or obstruct walkways, entrances, stairs, corridors, or other occupied or used facilities without written permission from Owner and approval of authorities having jurisdiction. Entrances shall be open for the Owner's use at all times.
2. Barricade work areas to keep the public from entering.
3. Notify Owner not less than one week in advance of activities that will affect Owner's operations.

1.12 WORK RESTRICTIONS

A. Work Restrictions, General: Comply with restrictions on construction operations.

1. Comply with limitations on use of public streets and with other requirements of authorities having jurisdiction.
2. Refer to Section 011400 "Work Restrictions" for additional requirements.

B. On-Site Work Hours: Limit work to the site and/or existing building to normal business working hours of 7:00 a.m. to 5:00 p.m., Monday through Friday, unless otherwise indicated.

1. Weekend Hours: Weekend work shall not be allowed unless preapproved by the Owner.
2. Early Morning Hours: Early morning hours are not allowed unless required for utility shut downs.

C. Noise, Vibration, and Odors: Coordinate operations that may result in any level of noise and vibration, odors, or other disruption to the occupancy or use of adjacent occupied areas, the buildings and adjacent properties with the Owner.

1. Notify Architect and Owner not less than seven (7) days in advance of proposed disruptive operations.
2. Obtain Architect's and/or Owner's written permission before proceeding with disruptive operations.

D. Nonsmoking Campus and Building: Smoking is prohibited within the boundaries of all state workplaces including all buildings, facilities, indoor and outdoor spaces and all the surrounding

grounds owned by the State. This policy also includes but is not limited to parking lots, walkways, State vehicles and private vehicles parked or operated on State workplace property.

NOT FOR BID

1.13 SPECIFICATION AND DRAWING CONVENTIONS

A. Specification Content: The Specifications use certain conventions for the style of language and the intended meaning of certain terms, words, and phrases when used in particular situations. These conventions are as follows:

1. Imperative mood and streamlined language are generally used in the Specifications. The words "shall," "shall be," or "shall comply with," depending on the context, are implied where a colon (:) is used within a sentence or phrase.
2. Specification requirements are to be performed by Contractor unless specifically stated otherwise.

B. Division 01 General Requirements: Requirements of Sections in Division 01 apply to the Work of all Sections in the Specifications.

C. Drawing Coordination: Requirements for materials and products identified on Drawings are described in detail in the Specifications. One or more of the following are used on Drawings to identify materials and products:

1. Terminology: Materials and products are identified by the typical generic terms used in the individual Specifications Sections.
2. Abbreviations: Materials and products are identified by abbreviations published as part of the U.S. National CAD Standard and scheduled on Drawings.
3. Keynoting: Materials and products are identified by reference keynotes referencing Specification Section numbers found in this Project Manual.

1.14 FIELD ENGINEERING

A. Provide field engineering services; establish grades, lines, and levels, by use of recognized engineering survey practices.

B. Control datum for survey is that shown on drawings. Locate and protect control and reference points.

1.15 REFERENCES AND STANDARDS

A. For products specified by association or trade standards, comply with requirements of the standard, except when more rigid requirements are specified or are required by applicable codes.

B. The date of the standard is that in effect as of the Bid date, except when a specific date is specified.

C. Obtain copies of standards when required by Contract Documents. Maintain copy at job site during progress of the specific work.

1.16 MISCELLANEOUS PROVISIONS

A. SCHEDULE

1. The following is the required schedule for this work:

a. Bids Due: August 6, 2018, at 2:00 p.m.
b. Notice of Building Contract Award: Within thirty (30) days of receipt and acceptance of qualified low bid.
c. Purchase Order Issuance: The issuance of a State of Delaware purchase order is contingent upon the successful Contractor submitting bonds on State-approved forms, signed contracts and insurance certificates to the State of Delaware within 20 days of Notice of Award. A purchase order will be issued in approximately 30 days after these items have been submitted to the State of Delaware.
d. On-Site Mobilization: Upon receipt of State of Delaware purchase order.
e. Substantial Completion: The work shall be completed shall be completed **240 calendar days** from on-site start of work.
f. Completion of Punch List: 21 days from date of substantial completion.

1) Refer to the General Requirements for additional details.

NOT FOR BID

PART 2 - PRODUCTS (Not Used)

PART 3 - EXECUTION (Not Used)

END OF SECTION 011000

NOT FOR BID

SECTION 011400 - WORK RESTRICTIONS

PART 1 - GENERAL

1.1 RELATED DOCUMENTS

A. Drawings and general provisions of the Contract, including General and Supplementary Conditions and other Division 1 Specification Sections, apply to this Section.

1.2 USE OF PREMISES

A. Use of Site: Limit use of premises to work in areas indicated. Do not disturb portions of site beyond areas in which the Work is indicated.

1. Limits: Confine construction operations to the limits indicated on the drawings. Do not disturb areas to remain occupied during the renovations.
2. Owner Occupancy: The surrounding occupied areas, site, buildings, roadways, access into the buildings, etc. beyond the work area shall remain accessible to the Owner.
3. Parking: Parking shall not be allowed on or along state maintained roadways. Parking shall be permitted in paved parking lots within the State Park, and at staging areas designated on the construction plans. No parking shall be allowed on unpaved areas of the park, except as noted above.
4. Dumpster: Dumpsters shall only be allowed in the staging areas designated on the construction plans. The dumpster shall be covered to avoid windblown debris. Debris shall be removed on a regular basis in order to avoid an overflowing dumpster. Restoration of grounds disturbed by the dumpster will be required upon completion of the Project. “No Trespassing” signs shall be placed on the dumpster.
5. Access: Access to the construction site shall only be allowed at locations indicated on the contract plans.
6. Storage: Material and equipment storage shall only be allowed at staging areas designated on the contract plans.
7. Public Roadways, Driveways, Entrances and Public Sidewalks: Keep public roadways, driveways, entrances and public sidewalks serving premises clear and available to the Public, Owner, Owner's employees and emergency vehicles at all times. Do not use these areas for parking or storage of materials.

    a. Schedule deliveries to minimize use of roadways, driveways, sidewalks and entrances.
    b. The Owner will not sign for any deliveries at any time.
    c. Schedule deliveries to minimize space and time requirements for storage of materials and equipment on-site.

B. Use of Existing Building: Maintain the existing building in a weathertight condition throughout renovation period. Repair damage caused by construction operations. Protect building and its contents during construction period.

1. The Contractor shall be provided partial access to the Park as necessary to complete the work. A security code and/or keys shall will be / not be provided to the Contractor.
2. Use of the Owner's telephones will not be allowed.
3. Flammable materials shall be kept outside, away from all buildings, in a flammable liquid/material storage box.
4. Gas powered equipment will not be allowed in the buildings or near windows and intake louvers at any time.
5. Debris shall be removed from and around the construction site, including the sidewalks, trails and parking areas on a daily basis.
6. At no times shall equipment be left operating in and around building/site name after hours or when no one is present in the building.
7. Noisy activities shall take place during the hours defined by the County and/or Municipality, and prescheduled with the Owner to avoid disruption of their activities.
8. Access to water will not be provided.
9. There will be no restroom facilities available. The Contractor shall provide a self-contained toilet unit securely attached to the ground and kept locked after hours.
10. Dogs or other animals shall not be brought onto the property at any time.
11. Children shall not be brought onto the site at any time.
12. The general surroundings of the park are open to the public and those working at the site shall not use abusive language.
13. Radios or other music-playing devices will not be allowed. Head phones and ear buds will not be allowed.
14. Fire extinguishers shall be kept in the areas under renovation at the park at all times.
15. All work taking place on the site shall be monitored by the contractor's project superintendent at all times even if the General Contractor's work forces are not working at the site.
16. The Project superintendent shall discuss weekly with the DNREC Project Manager to review the activities planned for that week to avoid miscommunication, facilitate the renovation process and to maintain the Owner's operations.

NOT FOR BID

PART 2 - PRODUCTS (Not Used)

PART 3 - EXECUTION (Not Used)

END OF SECTION 011400

NOT FOR BID

SECTION 012200 - UNIT PRICES

PART 1 - GENERAL

1.1 RELATED DOCUMENTS

A. Drawings and general provisions of the Contract, including General and Supplementary Conditions and other Division 1 Specification Sections, apply to this Section.

1.2 SUMMARY

A. This Section includes administrative and procedural requirements for unit prices.

B. Related Sections include the following:
1. Division 1 Section "Contract Modification Procedures" for procedures for submitting and handling Change Orders.
2. Section 13 [illegible]50, "Helical Screw Foundations."
3. Section 13 29 50, "Prefabricated Pedestrian Bridge."

1.3 DEFINITIONS

A. Unit price is an amount proposed by bidders, stated on the Bid Form, as a price per unit of measurement for materials or services added to or deducted from the Contract Sum by appropriate modification, if estimated quantities of Work required by the Contract Documents are increased or decreased.

1.4 PROCEDURES

A. Unit prices include all necessary material, plus cost for delivery, installation, insurance, applicable taxes, overhead, and profit.

B. Measurement and Payment: Refer to individual Specification Sections for work that requires establishment of unit prices. Methods of measurement and payment for unit prices are specified in those Sections.

C. Owner reserves the right to reject Contractor's measurement of work-in-place that involves use of established unit prices and to have this work measured, at Owner's expense, by an independent surveyor acceptable to Contractor.

D. List of Unit Prices: A list of unit prices is included at the end of this Section. Specification Sections referenced in the schedule contain requirements for materials described under each unit price.

PART 2 - PRODUCTS (Not Used)

PART 3 - EXECUTION

3.1 LIST OF UNIT PRICES

A. Unit Price No. 1 –Prefabricated Pedestrian Bridge.
   1. Description: Provide and install one (1) pre-engineered, prefabricated pedestrian bridge as defined in Section 13 29 50, "Prefabricated Pedestrian Bridge."
   2. Unit of Measurement: Unit (Each)

B. Unit Price No. 2 – Helical Screw Piles.
   1. Description: Provide and install helical screw piles as shown on the Contract Plans, and as defined in Section 13 24 50, "Helical Screw Foundations."
   2. Unit of Measurement: Unit (Each)

C. Unit Price No. 3 – Borrow, Type F.
   1. Description: Provide, install, and compact Type F Borrow only when sufficient amount of on-site Type F Borrow material is not available. Material shall meet the requirements of Section 209 – Borrow, and shall be placed in accordance with Section 202 – Excavation and Embankment, of the DelDOT Standard Specifications. Material suppliers shall be a source preapproved by DelDOT Materials and Research.
   2. Unit of Measurement: Unit (Cubic Yard)

D. Unit Price No. 4 – Disposal of Excess Materials.
   1. Description: Remove and legally dispose of excess and/or undesirable soils that can not be incorporated into the proposed construction. Price shall cover the cost of loading, hauling, and all labor, materials, and equipment necessary to remove the excess soil. Material shall be disposed of in accordance with Section 106.08 – Disposal of Unacceptable Materials, of the DelDOT Standard Specifications.
   2. Unit of Measurement: Unit (Cubic Yards)

END OF SECTION 012700

NOT FOR BID

NOT FOR BID

SECTION 012300 - ALTERNATES

PART 1 - GENERAL

1.1 RELATED DOCUMENTS

A. Drawings and general provisions of the Contract, including General and Supplementary Conditions and other Division 1 Specification Sections, apply to this Section.

1.2 SUMMARY

A. This Section includes administrative and procedural requirements for alternates.

1.3 DEFINITIONS

A. Alternate: An amount proposed by bidders and stated on the Bid Form for certain work defined in the Bidding Requirements that may be added to or deducted from the Base Bid amount if Owner decides to accept a corresponding change either in the amount of construction to be completed or in the products, materials, equipment, systems, or installation methods described in the Contract Documents.

1. The cost or credit for each alternate is the net addition to or deduction from the Contract Sum to incorporate alternate into the Work. No other adjustments are made to the Contract Sum.

1.4 PROCEDURES

A. Coordination: Modify or adjust affected adjacent work as necessary to completely integrate work of the alternate into Project.

1. Include as part of each alternate, miscellaneous devices, accessory objects, and similar items incidental to or required for a complete installation whether or not indicated as part of alternate.

B. Notification: Immediately following award of the Contract, notify each party involved, in writing, of the status of each alternate. Indicate if alternates have been accepted, rejected, or deferred for later consideration. Include a complete description of negotiated modifications to alternates.

C. Execute accepted alternates under the same conditions as other work of the Contract.

D. Schedule: A Schedule of Alternates is included at the end of this Section. Specification Sections referenced in schedule contain requirements for materials necessary to achieve the work described under each alternate.

E. PRODUCTS (Not Used)

PART 2 - EXECUTION

2.1 SCHEDULE OF ALTERNATES

A. Alternate 1: Helical Pile Static Load Testing

1. State the amount to be added/deducted from the Base Bid to eliminate load testing one (1) helical pile at each bridge abutment, total two (2) tests.
2. Base Bid includes all other work not identified as an Alternate, including load testing of one (1) helical pile at each abutment of the bridge, total two (2) tests.

END OF SECTION 012300

NOT FOR BID

NOT FOR BID

SECTION 012400 - PERMITS

PART 1 - GENERAL

1.1 RELATED DOCUMENTS

A. Drawings and general provisions of the Contract, including General and Supplementary Conditions and other Division 1 Specification Sections, apply to this Section.

1.2 SUMMARY

A. This Section includes permits that have been issued for this Project as well as permits-in-progress initiated by the Owner and those required Contractor application.

1.3 DEFINITIONS

A. Permits: A document issued by the Authorities having jurisdiction approving specific construction. Permits may approve the documents as submitted or contain caveats that are to be followed.
1. Preconstruction Permits: Permits issued prior to the bidding and award and which are required prior to proceeding to this stage.
2. Post Bid Permits: Permits required to by applied for by the successful contractor. These include demolition permits, building permits and sub-permits such as mechanical, electrical, fire suppression and plumbing.
3. Post Construction Permits: Permits issued by the authorities having jurisdiction stating that a structure or portion of the structure has been approved as complying with applicable laws, regulations and codes and may be occupied and put to its intended you.

1.4 RESPONSIBILITIES

A. The Contractor shall abide by the approved permits which are to include the notations provided by the entity/person approving the permit.

B. The Contractor is responsible for obtaining and paying for all construction permits unless stated otherwise in the construction documents.
1. The Contractor shall conform to all of the regulations and requirements, and shall be responsible for costs associated therewith, of all permits required of the Work.
2. The Contractor shall be responsible for scheduling all inspections as required by the permits.

PART 2 - PRODUCTS (Not Used)

PART 3 - EXECUTION

3.1 SCHEDULE OF ISSUED PERMITS

A. Delaware State Historic Preservation Office (SHPO).

B. United States Army Corps of Engineers (USACE).

C. New Castle County (Flood Plain).

D. Delaware Department of Transportation (DelDOT).

E. Department of Natural Resources and Environmental Control (DNREC).
1. Sediment and Stormwater Plan Approval.

F. State of Delaware Architectural Accessibility Board (AAB).

G. Delaware Division of Facilities Management (DFM)

3.2 SCHEDULE OF PENDING PERMITS.

A. None.

NOT FOR BID

END OF SECTION 012400

NOT FOR BID

SECTION 012500 - CONTRACT MODIFICATION PROCEDURES

PART 1 - GENERAL

1.1 RELATED DOCUMENTS

A. Drawings and general provisions of the Contract, including General and Supplementary Conditions and other Division 1 Specification Sections, apply to this Section.

1.2 SUMMARY

A. This Section specifies administrative and procedural requirements for handling and processing Contract modifications.

B. Related Sections include the following:

1. Division 1 Section "Submittal Procedures for" administrative procedures for handling requests for substitutions made after Contract award.

1.3 MINOR CHANGES IN THE WORK

A. Architect will issue supplemental instructions authorizing Minor Changes in the Work, not involving adjustment to the Contract Sum or the Contract Time, on AIA Document G710, "Architect's Supplemental Instructions.

1.4 PROPOSAL REQUESTS

A. Owner-Initiated Proposal Requests: Architect will issue a detailed description of proposed changes in the Work that may require adjustment to the Contract Sum or the Contract Time. If necessary, the description will include supplemental or revised Drawings and Specifications.

1. Proposal Requests issued by Architect are for information only. Do not consider them instructions either to stop work in progress or to execute the proposed change.
2. Within time specified in Proposal Request after receipt of Proposal Request, submit a quotation estimating cost adjustments to the Contract Sum and the Contract Time necessary to execute the change.

   a. Include a list of quantities of products required or eliminated and unit costs, with total amount of purchases and credits to be made. If requested, furnish survey data to substantiate quantities.
   b. Indicate applicable taxes, delivery charges, equipment rental, and amounts of trade discounts.
   c. Include an updated Contractor's Construction Schedule that indicates the effect of the change, including, but not limited to, changes in activity duration, start and finish times, and activity relationship. Use available total float before requesting an extension of the Contract Time.

B. Contractor-Initiated Proposals: If latent or unforeseen conditions require modifications to the Contract, Contractor may propose changes by submitting a request for a change.

1. Include a statement outlining reasons for the change and the effect of the change on the Work. Provide a complete description of the proposed change. Indicate the effect of the proposed change on the Contract Sum and the Contract Time.
2. Include a list of quantities of products required or eliminated and unit costs, with total amount of purchases and credits to be made. If requested, furnish survey data to substantiate quantities.
3. Indicate applicable taxes, delivery charges, equipment rental, and amounts of trade discounts.
4. Include an updated Contractor's Construction Schedule that indicates the effect of the change, including, but not limited to, changes in activity duration, start and finish times, and activity relationship. Use available total float before requesting an extension of the Contract Time.
5. Comply with requirements in Division 1 Section "Product Requirements" if the proposed change requires substitution of one product or system for product or system specified.

NOT FOR BID

1.5 CHANGE ORDER PROCEDURES

A. On Owner's approval of a Proposal Request, Architect will issue a Change Order for signatures of Owner and Contractor on AIA Document G701.

1.6 CONSTRUCTION CHANGE DIRECTIVE

A. Construction Change Directive: Architect may issue a Construction Change Directive on AIA Document G714. Construction Change Directive instructs Contractor to proceed with a change in the Work, for subsequent inclusion in a Change Order.

1. Construction Change Directive contains a complete description of change in the Work. It also designates method to be followed to determine change in the Contract Sum or the Contract Time.

B. Documentation: Maintain detailed records on a time and material basis of work required by the Construction Change Directive.

1. After completion of change, submit an itemized account and supporting data necessary to substantiate cost and time adjustments to the Contract.

PART 2 - PRODUCTS (Not Used)

PART 3 - EXECUTION (Not Used)

END OF SECTION 012500

NOT FOR BID

SECTION 012900 - PAYMENT PROCEDURES

PART 1 - GENERAL

1.1 RELATED DOCUMENTS

A. Drawings and general provisions of the Contract, including General and Supplementary Conditions and other Division 1 Specification Sections, apply to this Section.

1.2 SUMMARY

A. This Section specifies administrative and procedural requirements necessary to prepare and process Applications for Payment.

B. Related Sections include the following:

1. Division 1 Section "Contract Modification Procedures" for administrative procedures for handling changes to the Contract.
2. Division 1 Section "Construction Progress Documentation" for administrative requirements governing preparation and submittal of Contractor's Construction Schedule.

1.3 DEFINITIONS

A. Schedule of Values: A statement furnished by Contractor allocating portions of the Contract Sum to various portions of the Work and used as the basis for reviewing Contractor's Applications for Payment.

1.4 SCHEDULE OF VALUES

A. Coordination: Coordinate preparation of the Schedule of Values with preparation of Contractor's Construction Schedule.

1. Correlate line items in the Schedule of Values with other required administrative forms and schedules, including the following:

   a. Application for Payment forms with Continuation Sheets.

2. Submit the Schedule of Values to Architect at earliest possible date but no later than seven days before the date scheduled for submittal of initial Applications for Payment.

B. Format and Content: Use the Project Manual table of contents as a guide to establish line items for the Schedule of Values. Provide at least one line item for each Specification Section.

1. Identification: Include the following Project identification on the Schedule of Values:

   a. Project name and location.
   b. Name of Architect.

c. Architect's project number.
d. Contractor's name and address.
e. Date of submittal.

2. Arrange the Schedule of Values in tabular form with separate columns to indicate the following for each item listed:

   a. Related Specification Section or Division.
   b. Description of the Work.
   c. Change Orders (numbers) that affect value.
   d. Dollar value.

      1) Percentage of the Contract Sum to nearest one-hundredth percent, adjusted to total 100 percent.

3. Provide a breakdown of the Contract Sum in enough detail to facilitate continued evaluation of Applications for Payment and progress reports. Coordinate with the Project Manual table of contents. Provide several line items for principal subcontract amounts, where appropriate.
4. Round amounts to nearest whole dollar; total shall equal the Contract Sum.
5. Provide a separate line item in the Schedule of Values for each part of the Work where Applications for Payment may include materials or equipment purchased or fabricated and stored, but not yet installed.

   a. Differentiate between items stored on-site and items stored off-site. Include evidence of insurance or bonded warehousing if required.

6. Provide separate line items in the Schedule of Values for initial cost of materials, for each subsequent stage of completion, and for total installed value of that part of the Work.
7. Each item in the Schedule of Values and Applications for Payment shall be complete. Include total cost and proportionate share of general overhead and profit for each item.

   a. Temporary facilities and other major cost items that are not direct cost of actual work-in-place may be shown either as separate line items in the Schedule of Values or distributed as general overhead expense, at Contractor's option.

8. Schedule Updating: Update and resubmit the Schedule of Values before the next Applications for Payment when Change Orders or Construction Change Directives result in a change in the Contract Sum.

1.5 APPLICATIONS FOR PAYMENT

A. Each Application for Payment shall be consistent with previous applications and payments as certified by Architect and paid for by Owner.

   1. Initial Application for Payment, Application for Payment at time of Substantial Completion, and final Application for Payment involve additional requirements.

NOT FOR BID

B. Payment Application Times: The date for each progress payment is indicated in the Agreement between Owner and Contractor. The period of construction Work covered by each Application for Payment is the period indicated in the Agreement.

C. Payment Application Forms: Use AIA Document G702 and AIA Document G703 Continuation Sheets as form for Applications for Payment.

D. Application Preparation: Complete every entry on form. Notarize and execute by a person authorized to sign legal documents on behalf of Contractor. Architect will return incomplete applications without action.

1. Entries shall match data on the Schedule of Values and Contractor's Construction Schedule. Use updated schedules if revisions were made.
2. Include amounts of Change Orders and Construction Change Directives issued before last day of construction period covered by application.

E. Transmittal: Submit 3 signed and notarized original copies of each Application for Payment to Architect by a method ensuring receipt within 24 hours. One copy shall include waivers of lien and similar attachments if required.

1. Transmit each copy with a transmittal form listing attachments and recording appropriate information about application.

F. Initial Application for Payment: Administrative actions and submittals that must precede or coincide with submittal of first Application for Payment include the following:

1. List of subcontractors.
2. Schedule of Values.
3. Contractor's Construction Schedule (preliminary if not final).
4. List of Contractor's staff assignments (Project Superintendent specifically).
5. Copies of building permits.
6. Certificates of insurance and insurance policies.
7. Performance and payment bonds.

G. Application for Payment at Substantial Completion: After issuing the Certificate of Substantial Completion, submit an Application for Payment showing 100 percent completion for portion of the Work claimed as substantially complete.

1. Include documentation supporting claim that the Work is substantially complete and a statement showing an accounting of changes to the Contract Sum.

H. Final Payment Application: Submit final Application for Payment with releases and supporting documentation not previously submitted and accepted, including, but not limited, to the following:

1. Updated final statement, accounting for final changes to the Contract Sum.
2. AIA Document G706, "Contractor's Affidavit of Payment of Debts and Claims."
3. AIA Document G706A, "Contractor's Affidavit of Release of Liens."
4. AIA Document G707, "Consent of Surety to Final Payment."

PART 2 - PRODUCTS (Not Used)

NOT FOR BID

PART 3 - EXECUTION (Not Used)

END OF SECTION 012900

NOT FOR BID

NOT FOR BID

SECTION 013100 - PROJECT MANAGEMENT AND COORDINATION

PART 1 - GENERAL

1.1 RELATED DOCUMENTS

A. Drawings and general provisions of the Contract, including General and Supplementary Conditions and other Division 1 Specification Sections, apply to this Section.

1.2 SUMMARY

A. This Section includes administrative provisions for coordinating construction operations on Project including, but not limited to, the following:

1. General project coordination procedures.
2. Administrative and supervisory personnel.
3. Project meetings.

B. Related Sections: The following Sections contain requirements that relate to this Section:

1. Division 1 Section "Construction Progress Documentation" for preparing and submitting the Contractor's Construction Schedule.
2. Division 1 Section "Closeout Procedures" for coordinating Contract closeout.

1.3 COORDINATION

A. Coordination: Coordinate construction operations included in various Sections of the Specifications to ensure efficient and orderly installation of each part of the Work. Coordinate construction operations, included in different Sections that depend on each other for proper installation, connection, and operation.

1. Schedule construction operations in sequence required to obtain the best results where installation of one part of the Work depends on installation of other components, before or after its own installation.
2. Coordinate installation of different components with subcontractors to ensure maximum accessibility for required maintenance, service, and repair.
3. Make adequate provisions to accommodate items scheduled for later installation.

B. If necessary, prepare memoranda for distribution to each party involved, outlining special procedures required for coordination. Include such items as required notices, reports, and list of attendees at meetings.

1. Prepare similar memoranda for Owner if coordination of their Work is required.

C. Administrative Procedures: Coordinate scheduling and timing of required administrative procedures with other construction activities and activities of other contractors to avoid conflicts and to ensure orderly progress of the Work. Such administrative activities include, but are not limited to, the following:

1. Preparation of Contractor's Construction Schedule.
2. Preparation of the Schedule of Values.
3. Installation and removal of temporary facilities and controls.
4. Delivery and processing of submittals.
5. Progress meetings.
6. Preinstallation conferences.
7. Project closeout activities.

NOT FOR BID

1.4 SUBMITTALS

A. Staff Names: Within 15 days of notice to proceed, submit a list of principal staff assignments, including superintendent and other personnel in attendance at Project site. Identify individuals and their duties and responsibilities; list addresses and telephone numbers, including home and office telephone numbers. Provide names, addresses, and telephone numbers of individuals assigned as standbys in the absence of individuals assigned to Project.

1.5 PROJECT MEETINGS

A. General: The Architect will schedule and conduct meetings and conferences at Project site, unless otherwise indicated.

1. Attendees: Inform participants and others involved, and individuals whose presence is required, of date and time of each meeting.
2. Minutes: The Architect will record significant discussions and agreements achieved. The minutes will be distributed to everyone concerned, including Owner, within 7 days of the meeting.

B. Preconstruction Conference: A preconstruction conference will be scheduled before the start of construction, at a time convenient to the Owner and Contractor, but no later than 15 days after execution of the Agreement. The conference will be held at the Project. The meeting will be conducted to review responsibilities and personnel assignments.

1. Attendees: Authorized representatives of Owner, Architect, and their consultants; Contractor and its superintendent; major subcontractors; and other concerned parties shall attend the conference. All participants at the conference shall be familiar with Project and authorized to conclude matters relating to the Work.
2. Agenda: Items of significance that could affect progress will be discussed, including the following:

   a. Tentative construction schedule.
   b. Designation of responsible personnel.
   c. Procedures for processing field decisions and Change Orders.
   d. Procedures for processing Applications for Payment.
   e. Submittal procedures.
   f. Preparation of Record Documents.
   g. Use of the premises.
   h. Responsibility for temporary facilities and controls.
   i. Parking availability.
   j. Storage areas.

k. Equipment deliveries and priorities.
l. Progress cleaning.
m. Working hours.

C. Progress Meetings: Progress meetings will be conducted every two weeks. Coordinate dates of meetings with preparation of payment requests.

1. Attendees: In addition to representatives of Owner and Architect, each contractor, subcontractor, supplier, and other entity concerned with current progress or involved in planning, coordination, or performance of future activities shall be represented at these meetings. All participants at the conference shall be familiar with Project and authorized to conclude matters relating to the Work.
2. Agenda: Review and correct or approve minutes of previous progress meeting. Review other items of significance that could affect progress. Include topics for discussion as appropriate to status of Project.

   a. Contractor's Construction Schedule: Review progress since the last meeting. Determine whether each activity is on time, ahead of schedule, or behind schedule, in relation to Contractor's Construction Schedule. Determine how construction behind schedule will be expedited; secure commitments from parties involved to do so. Discuss whether schedule revisions are required to ensure that current and subsequent activities will be completed within the Contract Time.
   b. Review present and future needs of each entity present, including the following:

      1) Deliveries.
      2) Off-site fabrication.
      3) Access.
      4) Site utilization.
      5) Temporary facilities and controls.
      6) Work hours.
      7) Progress cleaning.
      8) Quality and work standards.

3. Reporting: The Architect will distribute minutes of the meeting to each party present and to parties who should have been present. A brief summary, in narrative form, of progress since the previous meeting and report will be included.

   a. Schedule Updating: Revise Contractor's Construction Schedule after each progress meeting where revisions to the schedule have been made or recognized. The revised schedule will be issued concurrently with the report of each meeting.

PART 2 - PRODUCTS (Not Used)

PART 3 - EXECUTION (Not Used)

END OF SECTION 01310

NOT FOR BID

(THIS PAGE INTENTIONALLY LEFT BLANK)

NOT FOR BID

NOT FOR BID

SECTION 013150 – FIELD ENGINEERING

PART 1 - GENERAL

1.1 RELATED DOCUMENTS

A. Drawings and general provisions of the Contract, including General and Supplementary Conditions and other Division 1 Specification Sections, apply to this Section.

1.2 SUMMARY

A. This Section includes administrative provisions and procedural requirements for Field Engineering services, including, but not necessarily limited to the following:

1. Land Survey Work.
2. Engineering services.

1.3 SUBMITTALS

A. Certificates: Submit a certificate signed by the Land Surveyor certifying that the location and elevation of improvements comply with the Contract Documents.

B. Project Record Documents: Submit a record of Work performed and record survey data as required under provisions of Sections "Submittals" and "Project Closeout".

1.4 QUALITY ASSURANCE

A. Surveyor: Engage a Professional Land Surveyor, licensed in the State of Delaware, to perform required surveying services to ensure that grades, lines, levels, and locations of the Work are in compliance with the Contract Documents.

B. Engineer: Engage a Professional Engineer of the discipline required, registered in the State of Delaware, to perform required engineering services.

1.5 EXAMINATION

A. The Owner will identify existing control points and property line corner stakes.

B. Verify layout information shown on the Drawings, in relation to the property survey and existing benchmarks before proceeding to layout the Work. Locate and protect existing benchmarks and control points. Preserve permanent reference points during construction.

1. Do not change or relocate benchmarks or control points without prior written approval. Promptly report lost or destroyed reference points, or requirements to relocate reference points because of necessary changes in grades or locations.
2. Promptly replace lost or destroyed Project control points. Base replacements on the original survey control points.

C. Establish and maintain a minimum of two permanent benchmarks on the site, referenced to data established by survey control points.

1. Record benchmark locations, with horizontal and vertical data, on Project Record Documents.

D. Existing utilities and equipment: The existence and location of underground and other utilities and construction indicated as existing are not guaranteed. Before beginning sitework, investigate and verify the existence and location of underground utilities and other construction.

1.6 PERFORMANCE

A. Working from lines and levels established by the property survey, establish benchmarks and markers to set lines and levels at each story of construction and elsewhere as needed to properly locate each element of the Project. Calculate and measure required dimensions within indicated or recognized tolerances. Do not scale Drawings to determine dimensions.

1. Advise entities engaged in construction activities, of marked lines and levels provided for their use.
2. As construction proceeds, check every major element for line, level and plumb.

B. Surveyor's Log: Maintain a surveyor's log of control and other survey Work. Make this log available for reference.

1. Record deviations from required lines and levels, and advise the Architect when deviations that exceed indicated or recognized tolerances are detected. On Project Record Drawings, record deviations that are accepted and not corrected.
2. On completion of foundation walls, major site improvements, and other Work requiring field engineering services, prepare a certified survey showing dimensions, locations, angles and elevations of construction and sitework.

C. Site Improvements: Locate and lay out site improvements, including pavements, stakes for grading, fill and topsoil placement, utility slopes and invert elevations by instrumentation and similar appropriate means.

D. Building Lines and Levels: Locate and lay out batter boards for structures, building foundations, column grids and locations, floor levels and control lines and levels required for mechanical and electrical work.

PART 2 - PRODUCTS (Not Used)

PART 3 - EXECUTION (Not Used)

END OF SECTION 013150

NOT FOR BID

NOT FOR BID

SECTION 013200 - CONSTRUCTION PROGRESS DOCUMENTATION

PART 1 - GENERAL

1.1 RELATED DOCUMENTS

A. Drawings and general provisions of the Contract, including General and Supplementary Conditions and other Division 1 Specification Sections, apply to this Section.

1.2 SUMMARY

A. This Section includes administrative and procedural requirements for documenting the progress of construction during performance of the Work, including the following:

1. Contractor's Construction Schedule.
2. Field condition reports.
3. Special reports.

B. Related Sections include the following:

1. Division 1 Section "Payment Procedures" for submitting the Schedule of Values.
2. Division 1 Section "Project Management and Coordination" for submitting and distributing meeting and conference minutes.

1.3 DEFINITIONS

A. Activity: A discrete part of a project that can be identified for planning, scheduling, monitoring, and controlling the construction project. Activities included in a construction schedule consume time and resources.

1. Critical activities are activities on the critical path. They must start and finish on the planned early start and finish times.

B. CPM: Critical path method, which is a method of planning and scheduling a construction project where activities are arranged based on activity relationships. Network calculations determine when activities can be performed and the critical path of Project.

C. Critical Path: The longest connected chain of interdependent activities through the network schedule that establishes the minimum overall Project duration and contains no float.

D. Event: The starting or ending point of an activity.

E. Major Area: A story of construction, a separate building, or a similar significant construction element.

F. Milestone: A key or critical point in time for reference or measurement.

1.4 SUBMITTALS

A. Preliminary Construction Schedule: Submit two opaque copies.

B. Contractor's Construction Schedule: Submit two opaque copies of initial schedule, large enough to show entire schedule for entire construction period.

C. Field Condition Reports: Submit two copies at time of discovery of differing conditions.

D. Special Reports: Submit two copies at time of unusual event.

1.5 COORDINATION

A. Coordinate preparation and processing of schedules and reports with performance of construction activities and with scheduling and reporting of separate contractors.

B. Coordinate Contractor's Construction Schedule with the Schedule of Values, list of subcontracts, Submittals Schedule, progress reports, payment requests, and other required schedules and reports.

1. Secure time commitments for performing critical elements of the Work from parties involved.
2. Coordinate each construction activity in the network with other activities and schedule them in proper sequence.

PART 2 - PRODUCTS

2.1 CONTRACTOR'S CONSTRUCTION SCHEDULE, GENERAL

A. Procedures: Comply with procedures contained in AGC's "Construction Planning & Scheduling."

B. Time Frame: Extend schedule from date established for commencement of the Work to date of Substantial Completion.

1. Contract completion date shall not be changed by submission of a schedule that shows an early completion date, unless specifically authorized by Change Order.

C. Activities: Treat each separate area as a separate numbered activity for each principal element of the Work. Comply with the following:

1. Activity Duration: Define activities so no activity is longer than 20 days, unless specifically allowed by Architect.

NOT FOR BID

2. Submittal Review Time: Include review and resubmittal times indicated in Division 1 Section "Submittal Procedures" in schedule. Coordinate submittal review times in Contractor's Construction Schedule with Submittals Schedule.
3. Substantial Completion: Indicate completion in advance of date established for Substantial Completion, and allow time for Architect's administrative procedures necessary for certification of Substantial Completion.

D. Constraints: Include constraints and work restrictions indicated in the Contract Documents and as follows in schedule, and show how the sequence of the Work is affected.

1. Work Restrictions: Show the effect of the following items on the schedule:

   a. Coordination with existing construction.
   b. Use of premises restrictions.
   c. Provisions for future construction.
   d. Seasonal variations.
   e. Environmental controls.

2. Work Stages: Indicate important stages of construction for each major portion of the Work, including, but not limited to, the following:

   a. Mockups.
   b. Fabrication.
   c. Deliveries.
   d. Installation.

E. Milestones: Include milestones indicated in the Contract Documents in schedule, including, but not limited to, the Notice to Proceed, Substantial Completion, and Final Completion.

F. Contract Modifications: For each proposed contract modification and concurrent with its submission, prepare a time-impact analysis using fragnets to demonstrate the effect of the proposed change on the overall project schedule.

2.2 CONSTRUCTION SCHEDULE

A. Bar-Chart Schedule: Submit horizontal bar-chart-type construction schedule within five days of date established for commencement of the Work.

B. Preparation: Indicate each significant construction activity separately. Identify first workday of each week with a continuous vertical line. Outline significant construction activities.

2.3 REPORTS

A. Daily Construction Reports: Prepare a daily construction report recording the following information concerning events at Project site:

NOT FOR BID

1. List of subcontractors at Project site.
2. List of separate contractors at Project site.
3. Approximate count of personnel at Project site.
4. Equipment at Project site.
5. Material deliveries.
6. High and low temperatures and general weather conditions.
7. Accidents.
8. Meetings and significant decisions.
9. Unusual events (refer to special reports).
10. Stoppages, delays, shortages, and losses.
11. Emergency procedures.
12. Orders and requests of authorities having jurisdiction.
13. Change Orders received and implemented.
14. Construction Change Directives received and implemented.
15. Substantial Completions authorized.

B. Field Condition Reports: Immediately on discovery of a difference between field conditions and the Contract Documents, prepare and submit a detailed report. Submit with a request for interpretation. Include a detailed description of the differing conditions, together with recommendations for changing the Contract Documents.

NOT FOR BID

2.4 SPECIAL REPORTS

A. General: Submit special reports directly to Owner within one day of an occurrence. Distribute copies of report to parties affected by the occurrence.

B. Reporting Unusual Events: When an event of an unusual and significant nature occurs at Project site, whether or not related directly to the Work, prepare and submit a special report. List chain of events, persons participating, response by Contractor's personnel, evaluation of results or effects, and similar pertinent information. Advise Owner in advance when these events are known or predictable.

PART 3 - EXECUTION

3.1 CONTRACTOR'S CONSTRUCTION SCHEDULE

A. Contractor's Construction Schedule Updating: At bi-weekly intervals, update schedule to reflect actual construction progress and activities. Issue schedule at each regularly scheduled progress meeting.

1. Revise schedule immediately after each meeting or other activity where revisions have been recognized or made. Issue updated schedule concurrently with the report of each such meeting.
2. As the Work progresses, indicate Actual Completion percentage for each activity.

B. Distribution: Distribute copies of approved schedule to Architect, Owner, separate contractors, and other parties identified by Contractor with a need-to-know schedule responsibility.

END OF SECTION 013200

NOT FOR BID

(THIS PAGE INTENTIONALLY LEFT BLANK)

NOT FOR BID

NOT FOR BID

SECTION 013300 - SUBMITTAL PROCEDURES

PART 1 - GENERAL

1.1 RELATED DOCUMENTS

A. Drawings and general provisions of the Contract, including General and Supplementary Conditions and other Division 1 Specification Sections, apply to this Section.

1.2 SUMMARY

A. This Section includes administrative and procedural requirements for submitting Shop Drawings, Product Data, Samples, and other submittals.

B. Related Sections include the following:

1. Division 1 Section "Payment Procedures" for submitting Applications for Payment and the Schedule of Values.
2. Division 1 Section "Project Management and Coordination" for submitting and distributing meeting and conference minutes and for submitting Coordination Drawings.
3. Division 1 Section "Construction Progress Documentation" for submitting schedules and reports, including Contractor's Construction Schedule and the Submittals Schedule.
4. Division 1 Section "Quality Requirements" for submitting test and inspection reports and for mockup requirements.
5. Division 1 Section "Closeout Procedures" for submitting warranties.
6. Division 1 Section "Project Record Documents" for submitting Record Drawings, Record Specifications, and Record Product Data.
7. Division 1 Section "Operation and Maintenance Data" for submitting operation and maintenance manuals.

1.3 DEFINITIONS

A. Action Submittals: Written and graphic information that requires Architect's responsive action.

B. Informational Submittals: Written information that does not require Architect's responsive action. Submittals may be rejected for not complying with requirements.

1.4 SUBMITTAL PROCEDURES

A. General: Electronic copies of CAD Drawings of the Contract Drawings will be provided by Architect for Contractor's use in preparing submittals. The Contractor will be responsible for field verifying existing conditions.

B. Coordination: Coordinate preparation and processing of submittals with performance of construction activities.

1. Coordinate each submittal with fabrication, purchasing, testing, delivery, other submittals, and related activities that require sequential activity.
2. Coordinate transmittal of different types of submittals for related parts of the Work so processing will not be delayed because of need to review submittals concurrently for coordination.

   a. Architect reserves the right to withhold action on a submittal requiring coordination with other submittals until related submittals are received.

C. Processing Time: Allow enough time for submittal review, including time for resubmittals, as follows. Time for review shall commence on Architect's receipt of submittal. No extension of the Contract Time will be authorized because of failure to transmit submittals enough in advance of the Work to permit processing, including resubmittals.

1. Initial Review: Allow 15 days for initial review of each submittal. Allow additional time if coordination with subsequent submittals is required. Architect will advise Contractor when a submittal being processed must be delayed for coordination.
2. Intermediate Review: If intermediate submittal is necessary, process it in same manner as initial submittal.
3. Resubmittal Review: Allow 15 days for review of each resubmittal.
4. Sequential Review: Where sequential review of submittals by Architect's consultants, Owner, or other parties is indicated, allow 21 days for initial review of each submittal.

D. Identification: Place a permanent label or title block on each submittal for identification.

1. Indicate name of firm or entity that prepared each submittal on label or title block.
2. Provide a space approximately 6 by 8 inches (150 by 200 mm) on label or beside title block to record Contractor's review and approval markings and action taken by Architect.
3. Include the following information on label for processing and recording action taken:

   a. Project name.
   b. Date.
   c. Name and address of Architect.
   d. Name and address of Contractor.
   e. Name and address of subcontractor.
   f. Name and address of supplier.
   g. Name of manufacturer.
   h. Submittal number or other unique identifier, including revision identifier.

      1) Submittal number shall use Specification Section number followed by a decimal point and then a sequential number (e.g., 06100.01). Resubmittals shall include an alphabetic suffix after another decimal point (e.g., 06100.01.A).

   i. Number and title of appropriate Specification Section.

NOT FOR BID

j. Drawing number and detail references, as appropriate.
k. Location(s) where product is to be installed, as appropriate.
l. Other necessary identification.

E. Deviations: Highlight or otherwise specifically identify deviations from the Contract Documents on submittals.

F. Additional Copies: Unless additional copies are required for final submittal, and unless Architect observes noncompliance with provisions in the Contract Documents, initial submittal may serve as final submittal.

1. Submit one copy of submittal to concurrent reviewer in addition to specified number of copies to Architect.
2. Additional copies submitted for maintenance manuals will be marked with action taken and will be returned.

G. Transmittal: Package each submittal individually and appropriately for transmittal and handling. Transmit each submittal using a transmittal form. Architect will return submittals, without review, received from sources other than Contractor.

1. Transmittal Form: Provide locations on form for the following information:

a. Project name.
b. Date.
c. Destination (To:).
d. Source (From:).
e. Names of subcontractor, manufacturer, and supplier.
f. Category and type of submittal.
g. Submittal purpose and description.
h. Specification Section number and title.
i. Drawing number and detail references, as appropriate.
j. Submittal and transmittal distribution record.
k. Remarks.
l. Signature of transmitter.

2. On an attached separate sheet, prepared on Contractor's letterhead, record relevant information, requests for data, revisions other than those requested by Architect on previous submittals, and deviations from requirements in the Contract Documents, including minor variations and limitations. Include same label information as related submittal.

H. Resubmittals: Make resubmittals in same form and number of copies as initial submittal.

1. Note date and content of previous submittal.
2. Note date and content of revision in label or title block and clearly indicate extent of revision.
3. Resubmit submittals until they are marked "Furnish as Submitted".

NOT FOR BID

I. Distribution: Furnish copies of final submittals to manufacturers, subcontractors, suppliers, fabricators, installers, authorities having jurisdiction, and others as necessary for performance of construction activities. Show distribution on transmittal forms.

J. Use for Construction: Use only final submittals with mark indicating "Furnish as Submitted" or "Revise as Noted & Furnish" taken by Architect.

NOT FOR BID

1.5 CONTRACTOR'S USE OF ARCHITECT'S CAD FILES

A. General: At Contractor's written request, copies of Architect's CAD files will be provided to Contractor for Contractor's use in connection with Project, subject to the following conditions:

1. CADD files are limited to those that have been generated for this Project.
2. CADD files for the floor plans and roof plans shall be provided. Files for details, etc. will not be provided.
3. Contractor will be asked to sign Architects waiver of release form before files will be delivered to the contractor.

PART 2 - PRODUCTS

2.1 ACTION SUBMITTALS

A. General: Prepare and submit Action Submittals required by individual Specification Sections.

B. Product Data: Collect information into a single submittal for each element of construction and type of product or equipment.

1. If information must be specially prepared for submittal because standard printed data are not suitable for use, submit as Shop Drawings, not as Product Data.
2. Mark each copy of each submittal to show which products and options are applicable.
3. Include the following information, as applicable:

a. Manufacturer's written recommendations.
b. Manufacturer's product specifications.
c. Manufacturer's installation instructions.
d. Standard color charts.
e. Manufacturer's catalog cuts.
f. Wiring diagrams showing factory-installed wiring.
g. Printed performance curves.
h. Operational range diagrams.
i. Mill reports.
j. Standard product operation and maintenance manuals.
k. Compliance with specified referenced standards.
l. Testing by recognized testing agency.

m. Application of testing agency labels and seals.
n. Notation of coordination requirements.

4. Submit Product Data before or concurrent with Samples.
5. Number of Copies: Submit six (6) copies of Product Data, unless otherwise indicated. Architect will return three copies. Mark up and retain one returned copy as a Project Record Document.

C. Shop Drawings: Prepare Project-specific information, drawn accurately to scale. Do not base Shop Drawings on reproductions of the Contract Documents or standard printed data.

1. Preparation: Fully illustrate requirements in the Contract Documents. Include the following information, as applicable:

a. Dimensions.
b. Identification of products.
c. Fabrication and installation drawings.
d. Roughing-in and setting diagrams.
e. Wiring diagrams showing field-installed wiring, including power, signal, and control wiring.
f. Shopwork manufacturing instructions.
g. Templates and patterns.
h. Schedules.
i. Design calculations.
j. Compliance with specified standards.
k. Notation of coordination requirements.
l. Notation of dimensions established by field measurement.
m. Relationship to adjoining construction clearly indicated.
n. Seal and signature of professional engineer if specified.
o. Wiring Diagrams: Differentiate between manufacturer-installed and field-installed wiring.

2. Sheet Size: Except for templates, patterns, and similar full-size drawings, submit Shop Drawings on sheets at least 8-1/2 by 11 inches (215 by 280 mm) but no larger than 30 by 40 inches (750 by 1000 mm).
3. Number of Copies: Submit six (6) opaque copies of each submittal, unless copies are required for operation and maintenance manuals. Submit five copies where copies are required for operation and maintenance manuals. Architect will retain three copies; remainder will be returned.

D. Samples: Submit Samples for review of kind, color, pattern, and texture for a check of these characteristics with other elements and for a comparison of these characteristics between submittal and actual component as delivered and installed.

1. Transmit Samples that contain multiple, related components such as accessories together in one submittal package.
2. Identification: Attach label on unexposed side of Samples that includes the following:

NOT FOR BID

a. Generic description of Sample.
b. Product name and name of manufacturer.
c. Sample source.
d. Number and title of appropriate Specification Section.

3. Disposition: Maintain sets of approved Samples at Project site, available for quality-control comparisons throughout the course of construction activity. Sample sets may be used to determine final acceptance of construction associated with each set.

   a. Samples that may be incorporated into the Work are indicated in individual Specification Sections. Such Samples must be in an undamaged condition at time of use.
   b. Samples not incorporated into the Work, or otherwise designated as Owner's property, are the property of Contractor.

4. Samples for Initial Selection: Submit manufacturer's color charts consisting of units or sections of units showing the full range of colors, textures, and patterns available.

   a. Number of Samples: Submit one full set(s) of available choices where color, pattern, texture or similar characteristics are required to be selected from manufacturer's product line. Architect will return submittal with options selected.

5. Samples for Verification: Submit full-size units or Samples of size indicated, prepared from same material to be used for the Work, cured and finished in manner specified, and physically identical with material or product proposed for use, and that show full range of color and texture variations expected. Samples include, but are not limited to, the following: partial sections of manufactured or fabricated components; small cuts or containers of materials; complete units of repetitively used materials; swatches showing color, texture, and pattern; color range sets; and components used for independent testing and inspection.

   a. Number of Samples: Submit four sets of Samples. Architect will retain three Sample sets; remainder will be returned.

      1) Submit a single Sample where assembly details, workmanship, fabrication techniques, connections, operation, and other similar characteristics are to be demonstrated.
      2) If variation in color, pattern, texture, or other characteristic is inherent in material or product represented by a Sample, submit at least four sets of paired units that show approximate limits of variations.

E. Product Schedule or List: As required in individual Specification Sections, prepare a written summary indicating types of products required for the Work and their intended location. Include the following information in tabular form:

1. Type of product. Include unique identifier for each product.
2. Number and name of room or space.
3. Location within room or space.

NOT FOR BID

4. Number of Copies: Submit three copies of product schedule or list, unless otherwise indicated. Architect will return two copies.

   a. Mark up and retain one returned copy as a Project Record Document.

F. Contractor's Construction Schedule: Comply with requirements specified in Division 1 Section "Construction Progress Documentation" for Construction Manager's action.

G. Submittals Schedule: Comply with requirements specified in Division 1 Section "Construction Progress Documentation."

H. Application for Payment: Comply with requirements specified in Division 1 Section "Payment Procedures."

I. Schedule of Values: Comply with requirements specified in Division 1 Section "Payment Procedures."

J. Subcontract List: Prepare a written summary identifying individuals or firms proposed for each portion of the Work, including those who are to furnish products or equipment fabricated to a special design. Include the following information in tabular form:

1. Name, address, and telephone number of entity performing subcontract or supplying products.
2. Number and title of related Specification Section(s) covered by subcontract.
3. Drawing number and detail references, as appropriate, covered by subcontract.
4. Number of Copies: Submit three copies of subcontractor list, unless otherwise indicated. Architect will return two copies.

   a. Mark up and retain one returned copy as a Project Record Document.

2.2 INFORMATIONAL SUBMITTALS

A. General: Prepare and submit Informational Submittals required by other Specification Sections.

1. Number of Copies: Submit three copies of each submittal, unless otherwise indicated. Architect will not return copies.
2. Certificates and Certifications: Provide a notarized statement that includes signature of entity responsible for preparing certification. Certificates and certifications shall be signed by an officer or other individual authorized to sign documents on behalf of that entity.
3. Test and Inspection Reports: Comply with requirements specified in Division 1 Section "Quality Requirements."

B. Coordination Drawings: Comply with requirements specified in Division 1 Section "Project Management and Coordination."

C. Contractor's Construction Schedule: Comply with requirements specified in Division 1 Section "Construction Progress Documentation."

NOT FOR BID

D. Qualification Data: Prepare written information that demonstrates capabilities and experience of firm or person. Include lists of completed projects with project names and addresses, names and addresses of architects and owners, and other information specified.

E. Welding Certificates: Prepare written certification that welding procedures and personnel comply with requirements in the Contract Documents. Submit record of Welding Procedure Specification (WPS) and Procedure Qualification Record (PQR) on AWS forms. Include names of firms and personnel certified.

F. Installer Certificates: Prepare written statements on manufacturer's letterhead certifying that Installer complies with requirements in the Contract Documents and, where required, is authorized by manufacturer for this specific Project.

G. Manufacturer Certificates: Prepare written statements on manufacturer's letterhead certifying that manufacturer complies with requirements in the Contract Documents. Include evidence of manufacturing experience where required.

H. Product Certificates: Prepare written statements on manufacturer's letterhead certifying that product complies with requirements in the Contract Documents.

I. Material Certificates: Prepare written statements on manufacturer's letterhead certifying that material complies with requirements in the Contract Documents.

J. Material Test Reports: Prepare reports written by a qualified testing agency, on testing agency's standard form, indicating and interpreting test results of material for compliance with requirements in the Contract Documents.

K. Product Test Reports: Prepare written reports indicating current product produced by manufacturer complies with requirements in the Contract Documents. Base reports on evaluation of tests performed by manufacturer and witnessed by a qualified testing agency, or on comprehensive tests performed by a qualified testing agency.

L. Research/Evaluation Reports: Prepare written evidence, from a model code organization acceptable to authorities having jurisdiction, that product complies with building code in effect for Project. Include the following information:

1. Name of evaluation organization.
2. Date of evaluation.
3. Time period when report is in effect.
4. Product and manufacturers' names.
5. Description of product.
6. Test procedures and results.
7. Limitations of use.

M. Schedule of Tests and Inspections: Comply with requirements specified in Division 1 Section "Quality Requirements."

NOT FOR BID

N. Preconstruction Test Reports: Prepare reports written by a qualified testing agency, on testing agency's standard form, indicating and interpreting results of tests performed before installation of product, for compliance with performance requirements in the Contract Documents.

O. Compatibility Test Reports: Prepare reports written by a qualified testing agency, on testing agency's standard form, indicating and interpreting results of compatibility tests performed before installation of product. Include written recommendations for primers and substrate preparation needed for adhesion.

P. Field Test Reports: Prepare reports written by a qualified testing agency, on testing agency's standard form, indicating and interpreting results of field tests performed either during installation of product or after product is installed in its final location, for compliance with requirements in the Contract Documents.

Q. Maintenance Data: Prepare written and graphic instructions and procedures for operation and normal maintenance of products and equipment. Comply with requirements specified in Division 1 Section "Operation and Maintenance Data."

R. Design Data: Prepare written and graphic information, including, but not limited to, performance and design criteria, list of applicable codes and regulations, and calculations. Include list of assumptions and other performance and design criteria and a summary of loads. Include load diagrams if applicable. Provide name and version of software, if any, used for calculations. Include page numbers.

S. Manufacturer's Instructions: Prepare written or published information that documents manufacturer's recommendations, guidelines, and procedures for installing or operating a product or equipment. Include name of product and name, address, and telephone number of manufacturer. Include the following, as applicable:

1. Preparation of substrates.
2. Required substrate tolerances.
3. Sequence of installation or erection.
4. Required installation tolerances.
5. Required adjustments.
6. Recommendations for cleaning and protection.

T. Manufacturer's Field Reports: Prepare written information documenting factory-authorized service representative's tests and inspections. Include the following, as applicable:

1. Name, address, and telephone number of factory-authorized service representative making report.
2. Statement on condition of substrates and their acceptability for installation of product.
3. Statement that products at Project site comply with requirements.
4. Summary of installation procedures being followed, whether they comply with requirements and, if not, what corrective action was taken.
5. Results of operational and other tests and a statement of whether observed performance complies with requirements.
6. Statement whether conditions, products, and installation will affect warranty.

NOT FOR BID

7. Other required items indicated in individual Specification Sections.

U. Insurance Certificates and Bonds: Prepare written information indicating current status of insurance or bonding coverage. Include name of entity covered by insurance or bond, limits of coverage, amounts of deductibles, if any, and term of the coverage.

V. Material Safety Data Sheets (MSDSs): Submit information directly to Owner; do not submit to Architect.

1. Architect will not review submittals that include MSDSs and will return the entire submittal for resubmittal.

NOT FOR BID

PART 3 - EXECUTION

3.1 CONTRACTOR'S REVIEW

A. Review each submittal and check for coordination with other Work of the Contract and for compliance with the Contract Documents. Note corrections and field dimensions. Mark with approval stamp before submitting to Architect.

B. Approval Stamp: Stamp each submittal with a uniform, approval stamp. Include Project name and location, submittal number, Specification Section title and number, name of reviewer, date of Contractor's approval, and statement certifying that submittal has been reviewed, checked, and approved for compliance with the Contract Documents.

3.2 ARCHITECT'S ACTION

A. General: Architect will not review submittals that do not bear Contractor's approval stamp and will return them without action.

B. Action Submittals: Architect will review each submittal, make marks to indicate corrections or modifications required, and return it. Architect will stamp each submittal with an action stamp and will mark stamp appropriately to indicate action taken, as follows:

1. Furnish as Submitted.
2. Revise as Noted & Furnish.
3. Revise as Noted & Furnish. Submit Revised Copy for Record.
4. Revise & Resubmit.

C. Informational Submittals: Architect will review each submittal and will not return it, or will return it if it does not comply with requirements. Architect will forward each submittal to appropriate party.

D. Partial submittals are not acceptable, will be considered nonresponsive, and will be returned without review.

E. Submittals not required by the Contract Documents may not be reviewed and may be discarded.

END OF SECTION 013300

NOT FOR BID

(THIS PAGE INTENTIONALLY LEFT BLANK)

NOT FOR BID

NOT FOR BID

SECTION 014000 - QUALITY REQUIREMENTS

PART 1 - GENERAL

1.1 RELATED DOCUMENTS

A. Drawings and general provisions of the Contract, including General and Supplementary Conditions and other Division 1 Specification Sections, apply to this Section.

1.2 SUMMARY

A. This Section includes administrative and procedural requirements for quality assurance and quality control.

B. Testing and inspecting services are required to verify compliance with requirements specified or indicated. These services do not relieve Contractor of responsibility for compliance with the Contract Document requirements.

1. Specific quality-assurance and -control requirements for individual construction activities are specified in the Sections that specify those activities. Requirements in those Sections may also cover production of standard products.
2. Specified tests, inspections, and related actions do not limit Contractor's other quality-assurance and -control procedures that facilitate compliance with the Contract Document requirements.
3. Requirements for Contractor to provide quality-assurance and -control services required by Architect, Owner or authorities having jurisdiction are not limited by provisions of this Section.

C. Related Sections include but are not limited to the following:

1. Division 1 Section "Construction Progress Documentation" for developing a schedule of required tests and inspections.
2. Division 1 Section "Cutting and Patching" for repair and restoration of construction disturbed by testing and inspecting activities.

1.3 DEFINITIONS

A. Quality-Assurance Services: Activities, actions, and procedures performed before and during execution of the Work to guard against defects and deficiencies and substantiate that proposed construction will comply with requirements.

B. Quality-Control Services: Tests, inspections, procedures, and related actions during and after execution of the Work to evaluate that actual products incorporated into the Work and completed

construction comply with requirements. Services do not include contract enforcement activities performed by Architect.

C. Mockups: Full-size, physical assemblies that are constructed on site. Mockups are used to verify selections made under sample submittals, to demonstrate aesthetic effects and, where indicated, qualities of materials and execution, and to review construction, coordination, testing, or operation; they are not Samples. Approved mockups establish the standard by which the Work will be judged.

D. Laboratory Mockups: Full-size, physical assemblies that are constructed at testing facility to verify performance characteristics.

E. Preconstruction Testing: Tests and inspections that are performed specifically for the Project before products and materials are incorporated into the Work to verify performance or compliance with specified criteria.

F. Product Testing: Tests and inspections that are performed by an NRTL, an NVLAP, or a testing agency qualified to conduct product testing and acceptable to authorities having jurisdiction, to establish product performance and compliance with industry standards.

G. Source Quality-Control Testing: Tests and inspections that are performed at the source, i.e., plant, mill, factory, or shop.

H. Field Quality-Control Testing: Tests and inspections that are performed on-site for installation of the Work and for completed Work.

I. Testing Agency: An entity engaged to perform specific tests, inspections, or both. Testing laboratory shall mean the same as testing agency.

J. Installer/Applicator/Erector: Contractor or another entity engaged by Contractor as an employee, Subcontractor, or Sub-subcontractor, to perform a particular construction operation, including installation, erection, application, and similar operations.

1. Using a term such as "carpentry" does not imply that certain construction activities must be performed by accredited or unionized individuals of a corresponding generic name, such as "carpenter." It also does not imply that requirements specified apply exclusively to trades people of the corresponding generic name.

K. Experienced: When used with an entity, "experienced" means having successfully completed a minimum of five previous projects similar in size and scope to this Project; being familiar with special requirements indicated; and having complied with requirements of authorities having jurisdiction.

1.4 CONFLICTING REQUIREMENTS

A. General: If compliance with two or more standards is specified and the standards establish different or conflicting requirements for minimum quantities or quality levels, comply with the

NOT FOR BID

most stringent requirement. Refer uncertainties and requirements that are different, but apparently equal, to Architect for a decision before proceeding.

B. Minimum Quantity or Quality Levels: The quantity or quality level shown or specified shall be the minimum provided or performed. The actual installation may comply exactly with the minimum quantity or quality specified, or it may exceed the minimum within reasonable limits. To comply with these requirements, indicated numerical values are minimum or maximum, as appropriate, for the context of requirements. Refer uncertainties to Architect for a decision before proceeding.

NOT FOR BID

1.5 SUBMITTALS

A. Qualification Data: For testing agency specified in "Quality Assurance" Article to demonstrate their capabilities and experience. Include proof of qualifications in the form of a recent report on the inspection of the testing agency by a recognized authority.

B. Schedule of Tests and Inspections: Prepare in tabular form and include the following:

1. Specification Section number and title.
2. Description of test and inspection.
3. Identification of applicable standards.
4. Identification of test and inspection methods.
5. Number of tests and inspections required.
6. Time schedule or time span for tests and inspections.
7. Entity responsible for performing tests and inspections.
8. Requirements for obtaining samples.
9. Unique characteristics of each quality-control service.

C. Reports: Prepare and submit certified written reports that include the following:

1. Date of issue.
2. Project title and number.
3. Name, address, and telephone number of testing agency.
4. Dates and locations of samples and tests or inspections.
5. Names of individuals making tests and inspections.
6. Description of the Work and test and inspection method.
7. Identification of product and Specification Section.
8. Complete test or inspection data.
9. Test and inspection results and an interpretation of test results.
10. Record of temperature and weather conditions at time of sample taking and testing and inspecting.
11. Comments or professional opinion on whether tested or inspected Work complies with the Contract Document requirements.
12. Name and signature of laboratory inspector.
13. Recommendations on retesting and reinspecting.

D. Permits, Licenses, and Certificates: For Owner's records, submit copies of permits, licenses, certifications, inspection reports, releases, jurisdictional settlements, notices, receipts for fee payments, judgments, correspondence, records, and similar documents, established for compliance with standards and regulations bearing on performance of the Work.

NOT FOR BID

1.6 QUALITY ASSURANCE

A. General: Qualifications paragraphs in this Article establish the minimum qualification levels required; individual Specification Sections specify additional requirements.

B. Installer Qualifications: A firm or individual experienced in installing, erecting, or assembling work similar in material, design, and extent to that indicated for this Project, whose work has resulted in construction with a record of successful in-service performance.

C. Manufacturer Qualifications: A firm experienced in manufacturing products or systems similar to those indicated for this Project and with a record of successful in-service performance, as well as sufficient production capacity to produce required units.

D. Fabricator Qualifications: A firm experienced in producing products similar to those indicated for this Project and with a record of successful in-service performance, as well as sufficient production capacity to produce required units.

E. Testing Agency Qualifications: An NRTL, an NVLAP, or an independent agency with the experience and capability to conduct testing and inspecting indicated, as documented according to ASTM E 548; and with additional qualifications specified in individual Sections; and where required by authorities having jurisdiction, that is acceptable to authorities.

1. NRTL: A nationally recognized testing laboratory according to 29 CFR 1910.7.
2. NVLAP: A testing agency accredited according to NIST's National Voluntary Laboratory Accreditation Program.

F. Factory-Authorized Service Representative Qualifications: An authorized representative of manufacturer who is trained and approved by manufacturer to inspect installation of manufacturer's products that are similar in material, design, and extent to those indicated for this Project.

1. Testing Agency Responsibilities: Submit a certified written report of each test, inspection, and similar quality-assurance service to Architect with copy to Contractor. Interpret tests and inspections and state in each report whether tested and inspected work complies with or deviates from the Contract Documents.

G. Mockups: Before installing portions of the Work requiring mockups, build mockups for each form of construction and finish required to comply with the following requirements, using materials indicated for the completed Work:

1. Build mockups in location and of size indicated or, if not indicated, as directed by Architect.

2. Notify Architect seven days in advance of dates and times when mockups will be constructed.
3. Demonstrate the proposed range of aesthetic effects and workmanship.
4. Obtain Architect's approval of mockups before starting work, fabrication, or construction.

    a. Allow seven days for initial review and each re-review of each mockup.

5. Maintain mockups during construction in an undisturbed condition as a standard for judging the completed Work.
6. Demolish and remove mockups when directed, unless otherwise indicated.

NOT FOR BID

1.7 QUALITY CONTROL

A. Owner Responsibilities: Where quality-control services are indicated as Owner's responsibility, Owner will engage a qualified testing agency to perform these services.

1. Owner will furnish Contractor with names, addresses, and telephone numbers of testing agencies engaged and a description of types of testing and inspecting they are engaged to perform.
2. Costs for retesting and reinspecting construction that replaces or is necessitated by work that failed to comply with the Contract Documents will be charged to Contractor and the Contract Sum will be adjusted by Change Order.

B. Tests and inspections not explicitly assigned to Owner are Contractor's responsibility. Unless otherwise indicated, provide quality-control services specified and those required by authorities having jurisdiction. Perform quality-control services required of Contractor by authorities having jurisdiction, whether specified or not.

1. Where services are indicated as Contractor's responsibility, engage a qualified testing agency to perform these quality-control services.

    a. Contractor shall not employ same entity engaged by Owner, unless agreed to in writing by Owner.

2. Notify testing agencies at least 24 hours in advance of time when Work that requires testing or inspecting will be performed.
3. Where quality-control services are indicated as Contractor's responsibility, submit a certified written report, in duplicate, of each quality-control service.
4. Testing and inspecting requested by Contractor and not required by the Contract Documents are Contractor's responsibility.
5. Submit additional copies of each written report directly to authorities having jurisdiction, when they so direct.

C. Manufacturer's Field Services: Where indicated, engage a factory-authorized service representative to inspect field-assembled components and equipment installation, including service connections. Report results in writing as specified in Division 1 Section "Submittal Procedures."

NOT FOR BID

D. Retesting/Reinspecting: Regardless of whether original tests or inspections were Contractor's responsibility, provide quality-control services, including retesting and reinspecting, for construction that replaced Work that failed to comply with the Contract Documents.

E. Testing Agency Responsibilities: Cooperate with Architect and Contractor in performance of duties. Provide qualified personnel to perform required tests and inspections.

1. Notify Architect and Contractor promptly of irregularities or deficiencies observed in the Work during performance of its services.
2. Determine the location from which test samples will be taken and in which in-situ tests are conducted.
3. Conduct and interpret tests and inspections and state in each report whether tested and inspected work complies with or deviates from requirements.
4. Submit a certified written report, in duplicate, of each test, inspection, and similar quality-control service through Contractor.
5. Do not release, revoke, alter, or increase the Contract Document requirements or approve or accept any portion of the Work.
6. Do not perform any duties of Contractor.

F. Associated Services: Cooperate with agencies performing required tests, inspections, and similar quality-control services, and provide reasonable auxiliary services as requested. Notify agency sufficiently in advance of operations to permit assignment of personnel. Provide the following:

1. Access to the Work.
2. Incidental labor and facilities necessary to facilitate tests and inspections.
3. Adequate quantities of representative samples of materials that require testing and inspecting. Assist agency in obtaining samples.
4. Facilities for storage and field curing of test samples.
5. Delivery of samples to testing agencies.
6. Preliminary design mix proposed for use for material mixes that require control by testing agency.
7. Security and protection for samples and for testing and inspecting equipment at Project site.

G. Coordination: Coordinate sequence of activities to accommodate required quality-assurance and -control services with a minimum of delay and to avoid necessity of removing and replacing construction to accommodate testing and inspecting.

1. Schedule times for tests, inspections, obtaining samples, and similar activities.

H. Schedule of Tests and Inspections: Prepare a schedule of tests, inspections, and similar quality-control services required by the Contract Documents. Submit schedule within 30 days of date established for commencement of the Work.

1. Distribution: Distribute schedule to Owner, Architect testing agencies, and each party involved in performance of portions of the Work where tests and inspections are required.

1.8 SPECIAL TESTS AND INSPECTIONS

A. Special Tests and Inspections: Owner will engage a qualified testing agency to conduct special tests and inspections required by authorities having jurisdiction as the responsibility of Owner, and as follows:

1. Verifying that manufacturer maintains detailed fabrication and quality-control procedures and reviewing the completeness and adequacy of those procedures to perform the Work.
2. Notifying Architect and Contractor promptly of irregularities and deficiencies observed in the Work during performance of its services.
3. Submitting a certified written report of each test, inspection, and similar quality-control service to Architect with copy to Contractor and to authorities having jurisdiction.
4. Submitting a final report of special tests and inspections at Substantial Completion, which includes a list of unresolved deficiencies.
5. Interpreting tests and inspections and stating in each report whether tested and inspected work complies with or deviates from the Contract Documents.
6. Retesting and reinspecting corrected work.

NOT FOR BID

PART 2 - PRODUCTS (Not Used)

PART 3 - EXECUTION

3.1 TEST AND INSPECTION LOG

A. Prepare a record of tests and inspections. Include the following:

1. Date test or inspection was conducted.
2. Description of the Work tested or inspected.
3. Date test or inspection results were transmitted to Architect.
4. Identification of testing agency or special inspector conducting test or inspection.

B. Maintain log at Project site. Post changes and modifications as they occur. Provide access to test and inspection log for Architect's reference during normal working hours.

3.2 REPAIR AND PROTECTION

A. General: On completion of testing, inspecting, sample taking, and similar services, repair damaged construction and restore substrates and finishes.

1. Provide materials and comply with installation requirements specified in other Specification Sections. Restore patched areas and extend restoration into adjoining areas with durable seams that are as invisible as possible.
2. Comply with the Contract Document requirements for Division 1 Section "Cutting and Patching."

B. Protect construction exposed by or for quality-control service activities.

C. Repair and protection are Contractor's responsibility, regardless of the assignment of responsibility for quality-control services.

END SECTION 014000

NOT FOR BID

NOT FOR BID

SECTION 014200 - REFERENCE STANDARDS AND DEFINITIONS

PART 1 - GENERAL

1.1 RELATED DOCUMENTS

A. Drawings and general provisions of the Contract, including General and Supplementary Conditions and other Division 1 Specification Sections, apply to this Section.

1.2 DEFINITIONS

A. General: Basic contract definitions are included in the Conditions of the Contract.

B. "Indicated": The term "indicated" refers to graphic representations, notes, or schedules on the Drawings; or to other paragraphs or schedules in the Specifications and similar requirements in the Contract Documents. Terms such as "shown," "noted," "scheduled," and "specified" are used to help the user locate the reference. Location is not limited.

C. "Directed": Terms such as "directed," "requested," "authorized," "selected," "approved," "required," and "permitted" mean directed by the Architect, requested by the Architect, and similar phrases.

D. "Approved": The term "approved," when used in conjunction with the Architect's action on the Contractor's submittals, applications, and requests, is limited to the Architect's duties and responsibilities as stated in the Conditions of the Contract.

E. "Regulations": The term "regulations" includes laws, ordinances, statutes, and lawful orders issued by authorities having jurisdiction, as well as rules, conventions, and agreements within the construction industry that control performance of the Work.

F. "Furnish": The term "furnish" means to supply and deliver to the Project site, ready for unloading, unpacking, assembly, installation, and similar operations.

G. "Install": The term "install" describes operations at the Project site including the actual unloading, temporary storage, unpacking, assembling, erecting, placing, anchoring, applying, working to dimension, finishing, curing, protecting, cleaning, and similar operations.

H. "Provide": The term "provide" means to furnish and install, complete and ready for the intended use.

I. "Installer": An installer is the Contractor or another entity engaged by the Contractor, either as an employee, subcontractor, or contractor of lower tier, to perform a particular construction activity, including installation, erection, application, or similar operations. Installers are required to be experienced in the operations they are engaged to perform.

1. The term "experienced," when used with the term "installer," means having successfully completed a minimum of five previous projects similar in size and scope to this Project; being familiar with the special requirements indicated; and having complied with requirements of authorities having jurisdiction.
2. Trades: Using a term such as "carpentry" does not imply that certain construction activities must be performed by accredited or unionized individuals of a corresponding generic name, such as "carpenter." It also does not imply that requirements specified apply exclusively to tradespersons of the corresponding generic name.
3. Assigning Specialists: Certain Sections of the Specifications require that specific construction activities shall be performed by specialists who are recognized experts in those operations. The specialists must be engaged for those activities, and their assignments are requirements over which the Contractor has no option. However, the ultimate responsibility for fulfilling contract requirements remains with the Contractor.

    a. This requirement shall not be interpreted to conflict with enforcing building codes and similar regulations governing the Work. It is also not intended to interfere with local trade-union jurisdictional settlements and similar conventions.

J. "Project site" is the space available to the Contractor for performing construction activities, either exclusively or in conjunction with others performing other work as part of the Project. The extent of the Project site is shown on the Drawings and may or may not be identical with the description of the land on which the Project is to be built.

K. "Testing Agencies": A testing agency is an independent entity engaged to perform specific inspections or tests, either at the Project site or elsewhere, and to report on and, if required, to interpret results of those inspections or tests.

1.3 SPECIFICATION FORMAT AND CONTENT EXPLANATION

A. Specification Format: These Specifications are organized into Divisions and Sections based on the CSI/CSC's "MasterFormat" numbering system.

B. Specification Content: These Specifications use certain conventions for the style of language and the intended meaning of certain terms, words, and phrases when used in particular situations. These conventions are as follows:

1. Abbreviated Language: Language used in the Specifications and other Contract Documents is abbreviated. Words and meanings shall be interpreted as appropriate. Words implied, but not stated, shall be interpolated as the sense requires. Singular words shall be interpreted as plural and plural words interpreted as singular where applicable as the context of the Contract Documents indicates.
2. Imperative mood and streamlined language are generally used in the Specifications. Requirements expressed in the imperative mood are to be performed by the Contractor. At certain locations in the Section Text, subjective language is used for clarity to describe responsibilities that must be fulfilled indirectly by the Contractor or by others when so noted.

NOT FOR BID

a. The words "shall," "shall be," or "shall comply with," depending on the context, are implied where a colon (:) is used within a sentence or phrase.

NOT FOR BID

1.4 INDUSTRY STANDARDS

A. Applicability of Standards: Unless the Contract Documents include more stringent requirements, applicable construction industry standards have the same force and effect as if bound or copied directly into the Contract Documents to the extent referenced. Such standards are made a part of the Contract Documents by reference.

B. Publication Dates: Comply with standards in effect as of the date of the Contract Documents.

C. Conflicting Requirements: Where compliance with two or more standards is specified and the standards establish different or conflicting requirements for minimum quantities or quality levels, comply with the most stringent requirement. Refer uncertainties and requirements that are different, but apparently equal to the Architect for a decision before proceeding.

1. Minimum Quantity or Quality Levels: The quantity or quality level shown or specified shall be the minimum provided or performed. The actual installation may comply exactly with the minimum quantity or quality specified, or it may exceed the minimum within reasonable limits. To comply with these requirements, indicated numeric values are minimum or maximum, as appropriate, for the context of the requirements. Refer uncertainties to the Architect for a decision before proceeding.

D. Copies of Standards: Each entity engaged in construction on the Project must be familiar with industry standards applicable to its construction activity. Copies of applicable standards are not bound with the Contract Documents.

1. Where copies of standards are needed to perform a required construction activity, the Contractor shall obtain copies directly from the publication source and make them available on request.

E. Abbreviations and Names: Trade association names and titles of general standards are frequently abbreviated. Where abbreviations and acronyms are used in the Specifications or other Contract Documents, they mean the recognized name of the trade association, standards-producing organization, authorities having jurisdiction, or other entity applicable to the context of the text provision. Refer to Gale Research's "Encyclopedia of Associations" or Columbia Books' "National Trade & Professional Associations of the U.S.," which are available in most libraries.

1.5 SUBMITTALS

A. Permits, Licenses, and Certificates: For the Owner's records, submit copies of permits, licenses, certifications, inspection reports, releases, jurisdictional settlements, notices, receipts for fee payments, judgments, correspondence, records, and similar documents, established for compliance with standards and regulations bearing on performance of the Work.

PRODUCTS (Not Applicable)

PART 2 - EXECUTION (Not Applicable)

END OF SECTION 014200

NOT FOR BID

White Clay Creek State Park Construction Documents
TRI-VALLEY TRAIL, PHASE II June 2018
Project Manual Project No. WCCS-07A

NOT FOR BID

SECTION 015000 - TEMPORARY FACILITIES AND CONTROLS

PART 1 - GENERAL

1.1 RELATED DOCUMENTS

A. Drawings and general provisions of the Contract, including General and Supplementary Conditions and other Division 1 Specification Sections, apply to this Section.

1.2 SUMMARY

A. This Section includes requirements for temporary utilities, support facilities, and security and protection facilities.

1.3 USE CHARGES

A. General: Cost or use charges for temporary facilities shall be included in the Contract Sum. Allow other entities to use temporary services and facilities without cost, including, but not limited to testing agencies and authorities having jurisdiction.

B. Sewer Service: Provide temporary restroom facilities for workers.

Water Service: Water is not available at the site. Provide water as required for construction.

Electric Power Service: Pay electric-power-service use charges for electricity used by all entities for construction operations.

C. Telephone Service: Provide temporary phone service to the site as required to contact Contractor site representatives.

1.4 INFORMATIONAL SUBMITTALS

A. Site Plan: Show temporary facilities, utility hookups, staging areas, and parking areas for construction personnel.

B. Erosion- and Sedimentation-Control Plan: Show compliance with requirements of EPA Construction General Permit or authorities having jurisdiction, whichever is more stringent.

C. Fire-Safety Program: Show compliance with requirements of NFPA 241 and authorities having jurisdiction. Indicate Contractor personnel responsible for management of fire-prevention program.

D. Moisture-Protection Plan: Describe procedures and controls for protecting materials and construction from water absorption and damage.

1. Describe delivery, handling, and storage provisions for materials subject to water absorption or water damage.
2. Indicate procedures for discarding water-damaged materials, protocols for mitigating water intrusion into completed Work, and replacing water-damaged Work.
3. Indicate sequencing of work that requires water, such as sprayed fire-resistive materials, plastering, and terrazzo grinding, and describe plans for dealing with water from these operations. Show procedures for verifying that wet construction has dried sufficiently to permit installation of finish materials.

E. Dust- and HVAC-Control Plan: Submit coordination drawing and narrative that indicates the dust- and HVAC-control measures proposed for use, proposed locations, and proposed time frame for their operation. Identify further options if proposed measures are later determined to be inadequate. Include the following:

1. Locations of dust-control partitions at each phase of work.
2. HVAC system isolation schematic drawing.
3. Location of proposed air-filtration system discharge.
4. Waste handling procedures.
5. Other dust-control measures.

NOT FOR BID

1.5 QUALITY ASSURANCE

A. Electric Service: Comply with NECA, NEMA, and UL standards and regulations for temporary electric service. Install service to comply with NFPA 70.

B. Comply with Federal, State and local codes and regulations as well as utility company requirements.

C. Coordinate work with Owner's requirements.

D. Materials: Materials must be new and adequate in capacity for the required usage. Materials must not create unsafe conditions nor violate requirements of applicable codes and standards.

E. Tests and Inspections: Arrange for authorities having jurisdiction to test and inspect each temporary utility before use. Obtain required certifications and permits.

1.6 PROJECT CONDITIONS

A. Temporary Use of Permanent Facilities: Installer of each permanent service shall assume responsibility for operation, maintenance, and protection of each permanent service during its use

as a construction facility before Owner's acceptance, regardless of previously assigned responsibilities.

B. Maintain excavations free of water. Provide and operate pumping equipment. Grade site to drain water away from buildings and excavations.

C. Provide temporary protection for installed products. Control traffic in immediate area to minimize damage.

D. Prohibit traffic and storage on waterproofed and roofed surfaces, on lawns and landscaped areas.

NOT FOR BID

PART 2 - PRODUCTS

2.1 MATERIALS

A. Chain-Link Fencing: Minimum 2-inch (50-mm), 0.148-inch- (3.8-mm-) thick, galvanized-steel, chain-link fabric fencing; minimum 6 feet (1.8 m) high with galvanized-steel pipe posts; minimum 2-3/8-inch- (60-mm-) OD line posts and 2-7/8-inch- (73-mm-) OD corner and pull posts, with 1-5/8-inch- (42-mm-) OD top rails.

B. Portable Chain-Link Fencing: Minimum 2-inch (50-mm), 0.148-inch- (3.8-mm-) thick, galvanized-steel, chain-link fabric fencing; minimum 6 feet (1.8 m) high with galvanized-steel pipe posts; minimum 2-3/8-inch- (60-mm-) OD line posts and 2-7/8-inch- (73-mm-) OD corner and pull posts, with 1-5/8-inch- (42-mm-) OD top and bottom rails. Provide concrete bases for supporting posts.

C. Polyethylene Sheet: Reinforced, fire-resistive sheet, 10-mil (0.25-mm) minimum thickness, with flame-spread rating of 15 or less per ASTM E 84 and passing NFPA 701 Test Method 2.

D. Dust-Control Adhesive-Surface Walk-off Mats: Provide mats minimum 36 by 60 inches (914 by 1624 mm).

E. Insulation: Unfaced mineral-fiber blanket, manufactured from glass, slag wool, or rock wool; with maximum flame-spread and smoke-developed indexes of 25 and 50, respectively.

F. Lumber and Plywood: Pressure-treated dimension lumber and plywood suitable for exterior exposure.

G. Paint: Exterior latex primer and matching topcoat.

2.2 TEMPORARY FACILITIES

A. Field Offices, General: Prefabricated or mobile units with serviceable finishes, temperature controls, and foundations adequate for normal loading.

B. Common-Use Field Office: Of sufficient size to accommodate needs of Owner, Architect/Engineer and construction personnel office activities and to accommodate Project

meetings specified in other Division 01 Sections. Keep office clean and orderly. Furnish and equip offices as follows:

1. Furniture required for Project-site documents including file cabinets, plan tables, plan racks, and bookcases.
2. Conference room of sufficient size to accommodate meetings of 10 individuals. Provide electrical power service and 120-V ac duplex receptacles, with no fewer than one receptacle on each wall. Furnish room with conference table, chairs, and 4-foot- (1.2-m-) square tack and marker boards.
3. Drinking water and private toilet.
4. Heating and cooling equipment necessary to maintain a uniform indoor temperature of 68 to 72 deg F (20 to 22 deg C).
5. Lighting fixtures capable of maintaining average illumination of 20 fc (215 lx) at desk height.

C. Storage and Fabrication Sheds: Provide sheds sized, furnished, and equipped to accommodate materials and equipment for construction operations.

1. Store combustible materials apart from building.

NOT FOR BID

2.3 EQUIPMENT

A. Fire Extinguishers: Portable, UL rated; with class and extinguishing agent as required by locations and classes of fire exposures.

B. Heating Equipment: Use of gasoline-burning space heaters, open-flame heaters, or salamander-type heating units is prohibited.

PART 3 - EXECUTION

3.1 INSTALLATION, GENERAL

A. Locate facilities where they will serve Project adequately and result in minimum interference with performance of the Work. Relocate and modify facilities as required by progress of the Work.

B. Provide each facility ready for use when needed to avoid delay. Do not remove until facilities are no longer needed or are replaced by authorized use of completed permanent facilities.

3.2 TEMPORARY UTILITY INSTALLATION

A. General: Install temporary service or connect to existing service.

1. Arrange with utility company, Owner, and existing users for time when service can be interrupted, if necessary, to make connections for temporary services.

B. Sewers and Drainage: Provide temporary utilities to remove effluent lawfully.

1. Connect temporary sewers to municipal system as directed by authorities having jurisdiction.

C. Water Service: Provide potable water for drinking and construction purposes.

1. The Contractor shall make all necessary arrangements for temporary water service for construction purposes, and furnish at his own expense all piping and accessories required.
2. Take positive measures to preclude cross-connections and backflow.
3. The Contractor will assume the cost of water consumed if responsible care and restraint are not exercised by the Contractor in its use.

D. Sanitary Facilities: Provide temporary toilets, wash facilities, and drinking water for use of construction personnel. Comply with requirements of authorities having jurisdiction for type, number, location, operation, and maintenance of fixtures and facilities.

E. Construction Aids: The General Contractor and each Subcontractor shall provide construction aids and equipment required by their personnel and to facilitate execution of their Work. Examples are scaffolds, staging, ladders, stairs, ramps, runways, platforms, railings, hoists, cranes, chutes and other such facilities and equipment. Mutual use may be arranged by the Contractor where applicable.

F. Heating and Cooling: Provide temporary heating and cooling required by construction activities for curing or drying of completed installations or for protecting installed construction from adverse effects of low temperatures or high humidity. Select equipment that will not have a harmful effect on completed installations or elements being installed.

G. Isolation of Work Areas in Occupied Facilities: Prevent dust, fumes, and odors from entering occupied areas.

H. Ventilation and Humidity Control: Provide temporary ventilation required by construction activities for curing or drying of completed installations or for protecting installed construction from adverse effects of high humidity. Select equipment that will not have a harmful effect on completed installations or elements being installed. Coordinate ventilation requirements to produce ambient condition required and minimize energy consumption.

1. Provide dehumidification systems when required to reduce substrate moisture levels to level required to allow installation or application of finishes.

I. Electric Power Service: Provide electric power service and distribution system of sufficient size, capacity, and power characteristics required for construction operations.

J. Telephone Service: Provide superintendent with cellular telephone or portable two-way radio for use when away from field office.

3.3 SUPPORT FACILITIES INSTALLATION

A. General: Comply with the following:

NOT FOR BID

1. Provide construction for temporary offices, shops, and sheds located within construction area or within 30 feet (9 m) of building lines that is noncombustible according to ASTM E 136. Comply with NFPA 241.
2. Maintain support facilities until Architect/Engineer schedules Substantial Completion inspection. Remove before Substantial Completion. Personnel remaining after Substantial Completion will be permitted to use permanent facilities, under conditions acceptable to Owner.

B. Security: Security of persons and property in the areas under control of the Contractor shall be the Contractor's exclusive responsibility.

1. The Contractor, at his own expense, shall initiate whatever programs that are necessary to execute his responsibility.
2. Control of access to the area under the Contractor's control shall be maintained. Visitors shall be required to report immediately to the Contractor's Superintendent and to produce full identification which will be recorded in the Contractor's Daily Log along with the purpose of the visit.

C. Traffic Controls: Comply with requirements of authorities having jurisdiction.

1. Protect existing site improvements to remain including curbs, pavement, and utilities.
2. Maintain access for fire-fighting equipment and access to fire hydrants and control valves.
3. Provide and maintain uninterrupted vehicular access to site and within to temporary construction facilities and work areas for persons and equipment involved in the construction of Project.
4. Maintain traffic areas free of excavated materials, construction equipment, products, snow, ice and debris.

D. Traffic Regulation: Obtain all necessary permits for access to and use of public roads and streets for construction and hauling purposes. Comply with traffic control regulations applying to permit issuance.

1. Provide markers, signs, lights and barriers on and near the site to safely control construction traffic and public access.

E. Parking: Use designated areas of Owner's existing parking areas for construction personnel's private vehicles and of Contractor's light-weight vehicles.

F. Project Signs: Provide Project signs as indicated. Unauthorized signs are not permitted.

1. Identification Signs: Provide Project identification signs as indicated on Drawings.
2. Temporary Signs: Provide other signs as indicated and as required to inform public and individuals seeking entrance to Project.

   a. Provide temporary, directional signs for construction personnel and visitors.

3. Maintain and touchup signs so they are legible at all times.

NOT FOR BID

G. Waste Disposal Facilities: Comply with requirements specified in Section 017419 "Construction Waste Management and Disposal."

H. Cleaning During Construction: Control accumulation of waste materials and rubbish. Periodically dispose of legally off site.

1. Clean interior areas prior to the start of finish work. Maintain areas free of dust and other contaminants during finishing operations.

I. Lifts and Hoists: Provide facilities necessary for hoisting materials and personnel.

1. Truck cranes and similar devices used for hoisting materials are considered "tools and equipment" and not temporary facilities.

J. Protection of Existing Facilities: Protect existing vegetation, equipment, structures, utilities, and other improvements at Project site and on adjacent properties, except those indicated to be removed or altered. Repair damage to existing facilities.

K. Environmental Protection: Provide protection, operate temporary facilities, and conduct construction as required to comply with environmental regulations and that minimize possible air, waterway, and subsoil contamination or pollution or other undesirable effects.

L. Temporary Erosion and Sedimentation Control: Provide measures to prevent soil erosion and discharge of soil-bearing water runoff and airborne dust to undisturbed areas and to adjacent properties and walkways, according to erosion- and sedimentation-control Drawings.

1. Verify that flows of water redirected from construction areas or generated by construction activity do not enter or cross tree- or plant- protection zones.
2. Inspect, repair, and maintain erosion- and sedimentation-control measures during construction until permanent vegetation has been established.
3. Clean, repair, and restore adjoining properties and roads affected by erosion and sedimentation from Project site during the course of Project.
4. Remove erosion and sedimentation controls and restore and stabilize areas disturbed during removal.

M. Stormwater Control: Comply with requirements of authorities having jurisdiction. Provide barriers in and around excavations and subgrade construction to prevent flooding by runoff of stormwater from heavy rains.

N. Tree and Plant Protection: Install temporary fencing located as indicated or outside the drip line of trees to protect vegetation from damage from construction operations. Protect tree root systems from damage, flooding, and erosion.

O. Site Enclosure Fence: Before construction operations begin, furnish and install site enclosure fence in a manner that will prevent people and animals from easily entering site except by entrance gates.

1. Extent of Fence: As required to enclose portion of site determined sufficient to accommodate construction operations and maintain security.

NOT FOR BID

2. Maintain security by limiting number of keys and restricting distribution to authorized personnel. Furnish 10 sets of keys to Owner.

P. Security Enclosure and Lockup: Install temporary enclosure around partially completed areas of construction. Provide lockable entrances to prevent unauthorized entrance, vandalism, theft, and similar violations of security. Lock entrances at end of each work day.

Q. Barricades, Warning Signs, and Lights: Comply with requirements of authorities having jurisdiction for erecting structurally adequate barricades, including warning signs and lighting.

R. Temporary Egress: Maintain temporary egress from existing occupied facilities as indicated and as required by authorities having jurisdiction.

NOT FOR BID

3.4 OPERATION, TERMINATION, AND REMOVAL

A. Supervision: Enforce strict discipline in use of temporary facilities. To minimize waste and abuse, limit availability of temporary facilities to essential and intended uses.

B. Maintenance: Maintain facilities in good operating condition until removal.

1. Maintain operation of temporary enclosures, heating, cooling, humidity control, ventilation, and similar facilities on a 24-hour basis where required to achieve indicated results and to avoid possibility of damage.

C. Temporary Facility Changeover: Do not change over from using temporary security and protection facilities to permanent facilities until Substantial Completion.

D. Termination and Removal: Remove each temporary facility when need for its service has ended, when it has been replaced by authorized use of a permanent facility, or no later than Substantial Completion. Complete or, if necessary, restore permanent construction that may have been delayed because of interference with temporary facility. Repair damaged Work, clean exposed surfaces, and replace construction that cannot be satisfactorily repaired.

1. Materials and facilities that constitute temporary facilities are property of Contractor. Owner reserves right to take possession of Project identification signs.
2. Remove temporary roads and paved areas not intended for or acceptable for integration into permanent construction. Where area is intended for landscape development, remove soil and aggregate fill that do not comply with requirements for fill or subsoil. Remove materials contaminated with road oil, asphalt and other petrochemical compounds, and other substances that might impair growth of plant materials or lawns. Repair or replace street paving, curbs, and sidewalks at temporary entrances, as required by authorities having jurisdiction.
3. At Substantial Completion, repair, renovate, and clean permanent facilities used during construction period. Comply with final cleaning requirements specified in Section 017700 "Closeout Procedures."

END OF SECTION 015000

NOT FOR BID

NOT FOR BID

SECTION 015600 - ENVIRONMENTAL PROTECTION

PART 1 - GENERAL

1.1 ENVIRONMENTAL PROTECTION

A. Environmental protection considerations consist of, but are not limited to, the following factors:

1. Natural resources including air, water, and land.
2. Solid waste disposal.
3. Noise.
4. Control of toxic substances and hazardous materials.
5. The presence of chemical, physical, and biological elements and agents that adversely affect and alter ecological balances.

1.2 GENERAL REQUIREMENTS

A. Provide and maintain environmental protection defined herein, other Sections and as indicated in the Drawings.

B. Comply with all Federal, State, and local laws, ordinances and regulations pertaining to environmental protection.

C. Compliance by subcontractors with the provisions of this and various other sections of these specifications is the responsibility of the Contractor.

D. Use of equipment from which factory-installed, anti-pollution and noise control devices are removed or rendered ineffective, either intentionally or through lack of proper maintenance is prohibited.

E. Furnish a certificate that all materials and operating equipment installed as a part of this project, the installation thereof and all equipment used in the construction, are in compliance with all applicable local laws, ordinances, regulations and permits concerning environmental pollution control and abatement.

1.3 PROTECTION OF NATURAL RESOURCES

A. General: It is intended that the natural resources within the project boundaries and outside the limits of permanent work performed be preserved in their existing condition, be restored to an equivalent of the existing condition or improved as indicated, as approved by the Architect/Engineer, upon completion of the work. Confine on-site construction activities to areas defined by the drawings and specifications.

1.4 TOXIC SUBSTANCES

B. Asbestos and Hazardous Materials Procedure: In the event the Contractor, during the course of the work on the project, encounters the presence of asbestos or any materials containing asbestos, or polychlorinated biphenyl (PCB's) or any other hazardous materials as recognized by local Authorities having jurisdiction, promptly notify the Owner through the Architect/Engineer. Do not perform any work pertinent to the asbestos or hazardous material prior to receipt of special instructions from the Owner through the Architect/Engineer. Any delay in the progress of the work as a result of encountering either asbestos or hazardous materials on the project will be mitigated by the Architect/Engineer. Within 24 hours of this notification to the Owner through the Architect/Engineer of the encountering of the presence of asbestos or hazardous materials, the Contractor will meet with the Architect/Engineer to replan and work around the affected area. The Architect/Engineer will provide the special instructions without delay and upon confirmation by the local Authorities of the actions taken and authorize work to progress.

C. Comply with all applicable provisions of the National Emission Standards for Asbestos (40 CFR 61 Subpart B).

D. Comply with the local regulations of polychlorinated biphenyl (PCB). Since these chemicals are used in some existing insulation, existing fixed and vehicular transformers, assure proper marking, handling, and disposal of any PCB's in accordance with the regulations of 40 CFR 761.

1. Do not use PCB chemical substance, mixture, equipment, container, sealant, coating, or dust-control agent except in accordance with regulations of 40 CFR 761.
2. Immediately report any PCB chemical substance, mixture, equipment, container, sealant, coating or dust control agent found stored within the project area to the Architect in writing and stop work in the area.

E. Lead paint is not known to be present.

1.5 Asbestos. Is not known to be present.

1.6 CONTROL AND DISPOSAL OF EXCESS MATERIAL, TRASH AND DEBRIS

A. Dispose of excess excavated material that is approved by the Architect/Engineer as clean fill onsite if an onsite soil disposal area is approved by the Architect/Engineer. If no such site is approved, dispose of the material in accordance with the provision of paragraph 1.5 (C).

B. Pick-up trash and place in containers. Empty containers on a regular schedule. Conduct handling and disposal to prevent contamination of the site and other areas. Do not dispose of in areas of natural vegetation. On completion, leave the area clean and natural looking.

C. Dispose of rubbish and debris as follows:

1. Transport all waste off the site and dispose of it in a manner that complies with State, and local requirements. Secure a permit or license prior to transporting any material off the site. Do not burn or bury waste materials on the site.

NOT FOR BID

1.7 CONTROL AND DISPOSAL OF CHEMICAL AND SANITARY WASTES

A. Store chemical waste in corrosion-resistant containers, remove from the project site, and dispose of as necessary, but not less frequently than monthly. Provide for disposal of chemical waste in accordance with standard established practices as approved by the Architect. Dispose of lubricants to be discarded in accordance with approved procedures meeting state, and local regulations.

1.8 DUST CONTROL

A. Keep dust down at all times including non working hours, weekends, and holidays.

B. Secure and cover transport equipment and loose materials in transit to ensure that materials do not become airborne during transit.

PART 2 - PRODUCTS (Not Used)

PART 3 - EXECUTION (Not Used)

END OF SECTION 01560

NOT FOR BID

(THIS PAGE INTENTIONALLY LEFT BLANK)

NOT FOR BID

NOT FOR BID

SECTION 015639 - TEMPORARY TREE AND PLANT PROTECTION

PART 1 - GENERAL

1.1 RELATED DOCUMENTS

A. Drawings and general provisions of the Contract, including General and Supplementary Conditions and other Division 01 Specification Sections, apply to this Section.

1.2 SUMMARY

A. Section includes general protection and pruning of existing trees and plants that are affected by execution of the Work, whether temporary or permanent construction.

B. Related Sections:

1. Section 015000 "Temporary Facilities and Controls" for temporary site fencing.
2. Section 311000 "Site Clearing" for removing existing trees and shrubs.

1.3 DEFINITIONS

A. Caliper: Diameter of a trunk measured by a diameter tape at 6 inches (150 mm) above the ground for trees up to, and including, 4-inch (100-mm) size; and 12 inches (300 mm) above the ground for trees larger than 4-inch (100-mm) size.

B. Plant-Protection Zone: Area surrounding individual trees, groups of trees, shrubs, or other vegetation to be protected during construction, and indicated on Drawings.

C. Tree-Protection Zone: Area surrounding individual trees or groups of trees to be protected during construction, and defined by a circle concentric with each tree with a radius 1.5 times the diameter of the drip line unless otherwise indicated.

D. Vegetation: Trees, shrubs, groundcovers, grass, and other plants.

1.4 ACTION SUBMITTALS

A. Product Data: For each type of product indicated.

B. Samples for Verification: For each type of the following:

1. Organic Mulch: 1-pint (0.5-L) volume of organic mulch; in sealed plastic bags labeled with composition of materials by percentage of weight and source of mulch.

2. Protection-Zone Fencing: Assembled Samples of manufacturer's standard size made from full-size components.
3. Protection-Zone Signage: Full-size Samples of each size and text, ready for installation.

C. Tree Pruning Schedule: Written schedule detailing scope and extent of pruning of trees to remain that interfere with or are affected by construction.

1. Species and size of tree.
2. Location on site plan. Include unique identifier for each.
3. Reason for pruning.
4. Description of pruning to be performed.
5. Description of maintenance following pruning.

NOT FOR BID

1.5 INFORMATIONAL SUBMITTALS

A. Qualification Data: For qualified arborist and tree service firm.

B. Certification: From arborist, certifying that trees indicated to remain have been protected during construction according to recognized standards and that trees were promptly and properly treated and repaired when damaged.

C. Maintenance Recommendations: From arborist, for care and protection of trees affected by construction during and after completing the Work.

D. Existing Conditions: Documentation of existing trees and plantings indicated to remain, which establishes preconstruction conditions that might be misconstrued as damage caused by construction activities.

1. Use sufficiently detailed photographs or videotape.
2. Include plans and notations to indicate specific wounds and damage conditions of each tree or other plants designated to remain.

1.6 QUALITY ASSURANCE

A. Arborist Qualifications: Certified Arborist as certified by ISA.

B. Tree Service Firm Qualifications: An experienced tree service firm that has successfully completed temporary tree and plant protection work similar to that required for this Project and that will assign an experienced, qualified arborist to Project site during execution of the Work.

C. Preinstallation Conference: Conduct conference at Project site.

1. Review methods and procedures related to temporary tree and plant protection including, but not limited to, the following:

a. Construction schedule. Verify availability of materials, personnel, and equipment needed to make progress and avoid delays.
b. Enforcing requirements for protection zones.
c. Arborist's responsibilities.
d. Field quality control.

NOT FOR BID

1.7 PROJECT CONDITIONS

A. The following practices are prohibited within protection zones:

1. Storage of construction materials, debris, or excavated material.
2. Parking vehicles or equipment.
3. Foot traffic.
4. Erection of sheds or structures.
5. Impoundment of water.
6. Excavation or other digging unless otherwise indicated.
7. Attachment of signs to or wrapping materials around trees or plants unless otherwise indicated.

B. Do not direct vehicle or equipment exhaust toward protection zones.

C. Prohibit heat sources, flames, ignition sources, and smoking within or near protection zones and organic mulch.

PART 2 - PRODUCTS

2.1 MATERIALS

A. Topsoil: Natural or cultivated top layer of the soil profile or manufactured topsoil; containing organic matter and sand, silt, and clay particles; friable, pervious, and black or a darker shade of brown, gray, or red than underlying subsoil; reasonably free of subsoil, clay lumps, gravel, and other objects more than 1 inch (25 mm) in diameter; and free of weeds, roots, and toxic and other nonsoil materials.

1. Obtain topsoil only from well-drained sites where topsoil is 4 inches (100 mm) deep or more; do not obtain from bogs or marshes.

B. Organic Mulch: Free from deleterious materials and suitable as a top dressing for trees and shrubs, consisting of one of the following:

1. Type: Shredded hardwood.
2. Size Range: 3 inches (76 mm) maximum, 1/2 inch (13 mm) minimum.
3. Color: Natural.

C. Protection-Zone Fencing: Fencing fixed in position and meeting one of the following requirements.

1. Chain-Link Protection-Zone Fencing: Galvanized-steel fencing fabricated from minimum 2-inch (50-mm) opening, 0.148-inch- (3.76-mm-) diameter wire chain-link fabric; with pipe posts, minimum 2-3/8-inch- (60-mm-) OD line posts and 2-7/8-inch- (73-mm-) OD corner and pull posts; with 1-5/8-inch- (42-mm-) OD top rails; with 0.177-inch- (4.5-mm-) diameter top tension wire and 0.177-inch- (4.5-mm-) diameter bottom tension wire; with tie wires, hog ring ties, and other accessories for a complete fence system.

   a. Height: 4 feet (1.2 m).

2. Plastic Protection-Zone Fencing: Plastic construction fencing constructed of high-density extruded and stretched polyethylene fabric with 2-inch (50-mm) maximum opening in pattern and weighing a minimum of 0.4 lb/ft. (0.6 kg/m); remaining flexible from minus 60 to plus 200 deg F (minus 16 to plus 93 deg C); inert to most chemicals and acids; minimum tensile yield strength of 2000 psi (13.8 MPa) and ultimate tensile strength of 2680 psi (18.5 MPa); secured with plastic bands or galvanized-steel or stainless-steel wire ties; and supported by tubular or T-shape galvanized-steel posts spaced not more than 8 feet (2.4 m) apart.

   a. Height: 4 feet (1.2 m).
   b. Color: High-visibility orange, nonfading.

D. Protection-Zone Signage: Shop-fabricated, rigid plastic or metal sheet with attachment holes prepunched and reinforced; legibly printed with nonfading lettering and as follows:

1. Size and Text: DO NOT ENTER. TREE PROTECTION ZONE.
2. Lettering: 3-inch- (75-mm-) high minimum, white characters on red background.

NOT FOR BID

PART 3 - EXECUTION

3.1 EXAMINATION

A. Erosion and Sedimentation Control: Examine the site to verify that temporary erosion- and sedimentation-control measures are in place. Verify that flows of water redirected from construction areas or generated by construction activity do not enter or cross protection zones.

B. For the record, prepare written report, endorsed by arborist, listing conditions detrimental to tree and plant protection.

3.2 PREPARATION

A. Locate and clearly identify trees, shrubs, and other vegetation to remain. Flag each tree trunk at 54 inches (1372 mm) above the ground.

B. Protect tree root systems from damage caused by runoff or spillage of noxious materials while mixing, placing, or storing construction materials. Protect root systems from ponding, eroding, or excessive wetting caused by dewatering operations.

C. Tree-Protection Zones: Mulch areas inside tree-protection zones and other areas indicated.

1. Apply 4-inch (100-mm) average thickness of organic mulch. Do not place mulch within 6 inches (150 mm) of tree trunks.

3.3 TREE- AND PLANT-PROTECTION ZONES

A. Protection-Zone Fencing: Install protection-zone fencing along edges of protection zones before materials or equipment are brought on the site and construction operations begin in a manner that will prevent people from easily entering protected area except by entrance gates. Construct fencing so as not to obstruct safe passage or visibility at vehicle intersections where fencing is located adjacent to pedestrian walkways or in close proximity to street intersections, drives, or other vehicular circulation.

1. Chain-Link Fencing: Install to comply with ASTM F 567 and with manufacturer's written instructions.
2. Posts: Set or drive posts into ground one-third the total height of the fence without concrete footings. Where a post is located on existing paving or concrete to remain, provide appropriate means of post support acceptable to Architect.

B. Protection-Zone Signage: Install protection-zone signage in visibly prominent locations in a manner approved by Architect. Install one sign spaced approximately every 20 feet (6 m) on protection-zone fencing, but no fewer than one sign with each facing a different direction.

C. Maintain protection zones free of weeds and trash.

D. Repair or replace trees, shrubs, and other vegetation indicated to remain or be relocated that are damaged by construction operations, in a manner approved by Architect.

E. Maintain protection-zone fencing and signage in good condition as acceptable to Architect and remove when construction operations are complete and equipment has been removed from the site.

1. Do not remove protection-zone fencing, even temporarily, to allow deliveries or equipment access through the protection zone.
2. Temporary access is permitted subject to preapproval in writing by arborist if a root buffer effective against soil compaction is constructed as directed by arborist. Maintain root buffer so long as access is permitted.

NOT FOR BID

3.4 EXCAVATION

A. General: Excavate at edge of protection zones and for trenches indicated within protection zones according to requirements in Section 312000 "Earth Moving."

B. Trenching near Trees: Where utility trenches are required within protection zones, hand excavate under or around tree roots or tunnel under the roots by tunneling, auger boring, or pipe jacking. Do not cut main lateral tree roots or taproots; cut only smaller roots that interfere with installation of utilities. Cut roots as required for root pruning.

C. Redirect roots in backfill areas where possible. If encountering large, main lateral roots, expose roots beyond excavation limits as required to bend and redirect them without breaking. If encountered immediately adjacent to location of new construction and redirection is not practical, cut roots approximately 3 inches (75 mm) back from new construction and as required for root pruning.

D. Do not allow exposed roots to dry out before placing permanent backfill. Provide temporary earth cover or pack with peat moss and wrap with burlap. Water and maintain in a moist condition. Temporarily support and protect roots from damage until they are permanently relocated and covered with soil.

NOT FOR BID

3.5 ROOT PRUNING

A. Prune roots that are affected by temporary and permanent construction. Prune as follows:

1. Cut roots manually by digging a trench and cutting exposed roots with sharp pruning instruments; do not break, tear, chop, or slant the cuts. Do not use a backhoe or other equipment that rips, tears, or pulls roots.
2. Cut Ends: Coat cut ends of roots more than 1-1/2 inches (38 mm) in diameter with an emulsified asphalt or other coating formulated for use on damaged plant tissues and that is acceptable to arborist.
3. Temporarily support and protect roots from damage until they are permanently redirected and covered with soil.
4. Cover exposed roots with burlap and water regularly.
5. Backfill as soon as possible according to requirements in Section 312000 "Earth Moving."

B. Root Pruning at Edge of Protection Zone: Prune roots 6 inches (150 mm) inside of the protection zone, by cleanly cutting all roots to the depth of the required excavation.

C. Root Pruning within Protection Zone: Clear and excavate by hand to the depth of the required excavation to minimize damage to root systems. Use narrow-tine spading forks, comb soil to expose roots, and cleanly cut roots as close to excavation as possible.

NOT FOR BID

3.6 CROWN PRUNING

A. Prune branches that are affected by temporary and permanent construction. Prune branches as follows:

1. Prune trees to remain to compensate for root loss caused by damaging or cutting root system. Provide subsequent maintenance during contract period as recommended by arborist.
2. Pruning Standards: Prune trees according to ANSI A300 (Part 1) and the following:

   a. Type of Pruning: Cleaning.

3. Cut branches with sharp pruning instruments; do not break or chop.
4. Do not apply pruning paint to wounds.

B. Chip removed branches and spread over areas identified by Architect.

3.7 REGRADING

A. Lowering Grade: Where new finish grade is indicated below existing grade around trees, slope grade beyond the protection zone. Maintain existing grades within the protection zone.

B. Lowering Grade within Protection Zone: Where new finish grade is indicated below existing grade around trees, slope grade away from trees as recommended by arborist unless otherwise indicated.

1. Root Pruning: Prune tree roots exposed by lowering the grade. Do not cut main lateral roots or taproots; cut only smaller roots. Cut roots as required for root pruning.

C. Raising Grade: Where new finish grade is indicated above existing grade around trees, slope grade beyond the protection zone. Maintain existing grades within the protection zone.

D. Minor Fill within Protection Zone: Where existing grade is 2 inches (50 mm) or less below elevation of finish grade, fill with topsoil. Place topsoil in a single uncompacted layer and hand grade to required finish elevations.

3.8 FIELD QUALITY CONTROL

A. Inspections: Engage a qualified arborist to direct plant-protection measures in the vicinity of trees, shrubs, and other vegetation indicated to remain and to prepare inspection reports.

3.9 REPAIR AND REPLACEMENT

A. General: Repair or replace trees, shrubs, and other vegetation indicated to remain or be relocated that are damaged by construction operations, in a manner approved by Architect.

1. Submit details of proposed root cutting and tree and shrub repairs.
2. Have arborist perform the root cutting, branch pruning, and damage repair of trees and shrubs.
3. Treat damaged trunks, limbs, and roots according to arborist's written instructions.
4. Perform repairs within 24 hours.
5. Replace vegetation that cannot be repaired and restored to full-growth status, as determined by Architect.

B. Trees: Remove and replace trees indicated to remain that are more than 25 percent dead or in an unhealthy condition before the end of the correction period or are damaged during construction operations that Architect determines are incapable of restoring to normal growth pattern.

1. Provide new trees of same size and species as those being replaced for each tree that measures 6 inches (150 mm) or smaller in caliper size.

a. Species: Match existing tree to be replaced.

C. Soil Aeration: Where directed by Architect, aerate surface soil compacted during construction. Aerate 10 feet (3 m) beyond drip line and no closer than 36 inches (900 mm) to tree trunk. Drill 2-inch- (50-mm-) diameter holes a minimum of 12 inches (300 mm) deep at 24 inches (600 mm) o.c. Backfill holes with an equal mix of augered soil and sand.

NOT FOR BID

3.10 DISPOSAL OF SURPLUS AND WASTE MATERIALS

A. Disposal: Remove excess excavated material, displaced trees, trash and debris, and legally dispose of them off Owner's property.

END OF SECTION 015639

NOT FOR BID

SECTION 016000 - PRODUCT REQUIREMENTS

PART 1 - GENERAL

1.1 RELATED DOCUMENTS

A. Drawings and general provisions of the Contract, including General and Supplementary Conditions and other Division 1 Specification Sections, apply to this Section.

1.2 SUMMARY

A. This Section includes administrative and procedural requirements for selection of products for use in Project; product delivery, storage, and handling; manufacturers' standard warranties on products; special warranties; product substitutions; and comparable products.

B. Related Sections include but are not limited to the following:

1. Division 1 Section "References" for applicable industry standards for products specified.
2. Division 1 Section "Closeout Procedures" for submitting warranties for Contract closeout.
3. Other included Sections for specific requirements for warranties on products and installations specified to be warranted.

1.3 DEFINITIONS

A. Products: Items purchased for incorporating into the Work, whether purchased for Project or taken from previously purchased stock. The term "product" includes the terms "material," "equipment," "system," and terms of similar intent.

1. Named Products: Items identified by manufacturer's product name, including make or model number or other designation shown or listed in manufacturer's published product literature that is current as of date of the Contract Documents.
2. New Products: Items that have not previously been incorporated into another project or facility, except that products consisting of recycled-content materials are allowed, unless explicitly stated otherwise. Products salvaged or recycled from other projects are not considered new products.
3. Comparable Product: Product that is demonstrated and approved through submittal process, or where indicated as a product substitution, to have the indicated qualities related to type, function, dimension, in-service performance, physical properties, appearance, and other characteristics that equal or exceed those of specified product.

B. Substitutions: Changes in products, materials, equipment, and methods of construction from those required by the Contract Documents and proposed by Contractor.

Basis-of-Design Product Specification: Where a specific manufacturer's product is named and accompanied by the words "basis of design," including make or model number or other designation, to establish the significant qualities related to type, function, dimension, in-service performance, physical properties, appearance, and other characteristics for purposes of evaluating comparable products of other named manufacturers.

NOT FOR BID

1.4 SUBMITTALS

A. Product List: Submit a list, in tabular from, showing specified products. Include generic names of products required. Include manufacturer's name and proprietary product names for each product.

1. Coordinate product list with Contractor's Construction Schedule and the Submittals Schedule.
2. Form: Tabulate information for each product under the following column headings:

a. Specification Section number and title.
b. Generic name used in the Contract Documents.
c. Proprietary name, model number, and similar designations.
d. Manufacturer's name and address.
e. Supplier's name and address.
f. Installer's name and address.
g. Projected delivery date or time span of delivery period.
h. Identification of items that require early submittal approval for scheduled delivery date.

3. Initial Submittal: Within 30 days after date of commencement of the Work, submit 3 copies of initial product list. Include a written explanation for omissions of data and for variations from Contract requirements.

a. At Contractor's option, initial submittal may be limited to product selections and designations that must be established early in Contract period.

4. Completed List: Within 60 days after date of commencement of the Work, submit 3 copies of completed product list. Include a written explanation for omissions of data and for variations from Contract requirements.
5. Architect's Action: Architect will respond in writing to Contractor within 15 days of receipt of completed product list. Architect's response will include a list of unacceptable product selections and a brief explanation of reasons for this action. Architect's response, or lack of response, does not constitute a waiver of requirement to comply with the Contract Documents.

B. Substitution Requests: Submit three copies of each request for consideration. Identify product or fabrication or installation method to be replaced. Include Specification Section number and title and Drawing numbers and titles.

1. Substitution Request Form: Use CSI Form 13.1A at the end of this section.

2. Documentation: Show compliance with requirements for substitutions and the following, as applicable:

   a. Statement indicating why specified material or product cannot be provided.
   b. Coordination information, including a list of changes or modifications needed to other parts of the Work and to construction performed by Owner and separate contractors that will be necessary to accommodate proposed substitution.
   c. Detailed comparison of significant qualities of proposed substitution with those of the Work specified. Significant qualities may include attributes such as performance, weight, size, durability, visual effect, and specific features and requirements indicated.
   d. Product Data, including drawings and descriptions of products and fabrication and installation procedures.
   e. Samples, where applicable or requested.
   f. List of similar installations for completed projects with project names and addresses and names and addresses of architects and owners.
   g. Material test reports from a qualified testing agency indicating and interpreting test results for compliance with requirements indicated.
   h. Research evaluation reports evidencing compliance with building code in effect for Project, from a model code organization acceptable to authorities having jurisdiction.
   i. Detailed comparison of Contractor's Construction Schedule using proposed substitution with products specified for the Work, including effect on the overall Contract Time. If specified product or method of construction cannot be provided within the Contract Time, include letter from manufacturer, on manufacturer's letterhead, stating lack of availability or delays in delivery.
   j. Cost information, including a proposal of change, if any, in the Contract Sum.
   k. Contractor's certification that proposed substitution complies with requirements in the Contract Documents and is appropriate for applications indicated.
   l. Contractor's waiver of rights to additional payment or time that may subsequently become necessary because of failure of proposed substitution to produce indicated results.

3. Architect's/Engineer's Action: If necessary, Architect/Engineer will request additional information or documentation for evaluation within 7 days of receipt of a request for substitution. Architect/Engineer will notify Contractor of acceptance or rejection of proposed substitution within 15 days of receipt of request, or 7 days of receipt of additional information or documentation, whichever is later.

   a. Form of Acceptance: Change Order.
   b. Use product specified if Architect/Engineer cannot make a decision on use of a proposed substitution within time allocated.

C. Comparable Product Requests: Submit three copies of each request for consideration. Identify product or fabrication or installation method to be replaced. Include Specification Section number and title and Drawing numbers and titles.

NOT FOR BID

1. Architect's Action: If necessary, Architect/Engineer will request additional information or documentation for evaluation within one week of receipt of a comparable product request. Architect/Engineer will notify Contractor of approval or rejection of proposed comparable product request within 15 days of receipt of request, or 7 days of receipt of additional information or documentation, whichever is later.

    a. Form of Approval: As specified in Division 1 Section "Submittal Procedures."
    b. Use product specified if Architect cannot make a decision on use of a comparable product request within time allocated.

D. Basis-of-Design Product Specification Submittal: Comply with requirements in Division 1 Section "Submittal Procedures." Show compliance with requirements.

NOT FOR BID

1.5 QUALITY ASSURANCE

A. Compatibility of Options: If Contractor is given option of selecting between two or more products for use on Project, product selected shall be compatible with products previously selected, even if previously selected products were also options.

1. Each contractor is responsible for providing products and construction methods compatible with products and construction methods of other contractors.
2. If a dispute arises between contractors over concurrently selectable but incompatible products, Architect/Engineer will determine which products shall be used.

1.6 PRODUCT DELIVERY, STORAGE, AND HANDLING

A. Deliver, store, and handle products using means and methods that will prevent damage, deterioration, and loss, including theft. Comply with manufacturer's written instructions.

B. Delivery and Handling:

1. Schedule delivery to minimize long-term storage at Project site and to prevent overcrowding of construction spaces.
2. Coordinate delivery with installation time to ensure minimum holding time for items that are flammable, hazardous, easily damaged, or sensitive to deterioration, theft, and other losses.
3. Deliver products to Project site in an undamaged condition in manufacturer's original sealed container or other packaging system, complete with labels and instructions for handling, storing, unpacking, protecting, and installing.
4. Inspect products on delivery to ensure compliance with the Contract Documents and to ensure that products are undamaged and properly protected.

C. Storage:

1. Store products to allow for inspection and measurement of quantity or counting of units.
2. Store materials in a manner that will not endanger Project structure.

3. Store products that are subject to damage by the elements, under cover in a weathertight enclosure above ground, with ventilation adequate to prevent condensation.
4. Store cementitious products and materials on elevated platforms.
5. Store foam plastic from exposure to sunlight, except to extent necessary for period of installation and concealment.
6. Comply with product manufacturer's written instructions for temperature, humidity, ventilation, and weather-protection requirements for storage.
7. Protect stored products from damage and liquids from freezing.
8. Provide a secure location and enclosure at Project site for storage of materials and equipment by Owner's construction forces. Coordinate location with Owner.

NOT FOR BID

1.7 PRODUCT WARRANTIES

A. Warranties specified in other Sections shall be in addition to, and run concurrent with, other warranties required by the Contract Documents. Manufacturer's disclaimers and limitations on product warranties do not relieve Contractor of obligations under requirements of the Contract Documents.

1. Manufacturer's Warranty: Preprinted written warranty published by individual manufacturer for a particular product and specifically endorsed by manufacturer to Owner.
2. Special Warranty: Written warranty required by or incorporated into the Contract Documents, either to extend time limit provided by manufacturer's warranty or to provide more rights for Owner.

B. Special Warranties: Prepare a written document that contains appropriate terms and identification, ready for execution. Submit a draft for approval before final execution.

1. Manufacturer's Standard Form: Modified to include Project-specific information and properly executed.
2. Specified Form: When specified forms are included with the Specifications, prepare a written document using appropriate form properly executed.
3. Refer to Divisions 2 through 33 Sections for specific content requirements and particular requirements for submitting special warranties.

C. Submittal Time: Comply with requirements in Division 1 Section "Closeout Procedures."

PART 2 - PRODUCTS

2.1 PRODUCT SELECTION PROCEDURES

A. General Product Requirements: Provide products that comply with the Contract Documents, that are undamaged and, unless otherwise indicated, that are new at time of installation.

1. Provide products complete with accessories, trim, finish, fasteners, and other items needed for a complete installation and indicated use and effect.

2. Standard Products: If available, and unless custom products or nonstandard options are specified, provide standard products of types that have been produced and used successfully in similar situations on other projects.
3. Owner reserves the right to limit selection to products with warranties not in conflict with requirements of the Contract Documents.
4. Where products are accompanied by the term "as selected," Architect will make selection.
5. Where products are accompanied by the term "match sample," sample to be matched is Architect's.
6. Descriptive, performance, and reference standard requirements in the Specifications establish "salient characteristics" of products.
7. Or Equal: Where products are specified by name and accompanied by the term "or equal" or "or approved equal" or "or approved," comply with provisions in Part 2 "Comparable Products" Article to obtain approval for use of an unnamed product.

B. Product Selection Procedures:

1. Product: Where Specifications name a single product and manufacturer, provide the named product that complies with requirements.
2. Manufacturer/Source: Where Specifications name a single manufacturer or source, provide a product by the named manufacturer or source that complies with requirements.
3. Products: Where Specifications include a list of names of both products and manufacturers, provide one of the products listed that complies with requirements.
4. Manufacturers: Where Specifications include a list of manufacturers' names, provide a product by one of the manufacturers listed that complies with requirements.
5. Available Products: Where Specifications include a list of names of both products and manufacturers, provide one of the products listed, or an unnamed product, that complies with requirements. Comply with provisions in Part 2 "Comparable Products" Article for consideration of an unnamed product.
6. Available Manufacturers: Where Specifications include a list of manufacturers, provide a product by one of the manufacturers listed, or an unnamed manufacturer, that complies with requirements. Comply with provisions in Part 2 "Comparable Products" Article for consideration of an unnamed product.
7. Product Options: Where Specifications indicate that sizes, profiles, and dimensional requirements on Drawings are based on a specific product or system, provide the specified product or system. Comply with provisions in Part 2 "Product Substitutions" Article for consideration of an unnamed product or system.
8. Basis-of-Design Product: Where Specifications name a product and include a list of manufacturers, provide the specified product or a comparable product by one of the other named manufacturers. Drawings and Specifications indicate sizes, profiles, dimensions, and other characteristics that are based on the product named. Comply with provisions in Part 2 "Comparable Products" Article for consideration of an unnamed product by the other named manufacturers.
9. Visual Matching Specification: Where Specifications require matching an established Sample, select a product that complies with requirements and matches Architect's/Engineer's sample. Architect's decision will be final on whether a proposed product matches.

NOT FOR BID

a. If no product available within specified category matches and complies with other specified requirements, comply with provisions in Part 2 "Product Substitutions" Article for proposal of product.

10. Visual Selection Specification: Where Specifications include the phrase "as selected from manufacturer's colors, patterns, textures" or a similar phrase, select a product that complies with other specified requirements.

a. Standard Range: Where Specifications include the phrase "standard range of colors, patterns, textures" or similar phrase, Architect will select color, pattern, density, or texture from manufacturer's product line that does not include premium items.
b. Full Range: Where Specifications include the phrase "full range of colors, patterns, textures" or similar phrase, Architect will select color, pattern, density, or texture from manufacturer's product line that includes both standard and premium items.

NOT FOR BID

2.2 PRODUCT SUBSTITUTIONS

A. Timing: Architect will consider requests for substitution if received within **30** days after the Notice to Proceed. Requests received after that time may be considered or rejected at discretion of Architect.

B. Conditions: Architect/Engineer will consider Contractor's request for substitution when the following conditions are satisfied. If the following conditions are not satisfied, Architect will return requests without action, except to record noncompliance with these requirements:

1. Requested substitution offers Owner a substantial advantage in cost, time, energy conservation, or other considerations, after deducting additional responsibilities Owner must assume. Owner's additional responsibilities may include compensation to Architect for redesign and evaluation services, increased cost of other construction by Owner, and similar considerations.
2. Requested substitution does not require extensive revisions to the Contract Documents.
3. Requested substitution is consistent with the Contract Documents and will produce indicated results.
4. Substitution request is fully documented and properly submitted.
5. Requested substitution will not adversely affect Contractor's Construction Schedule.
6. Requested substitution has received necessary approvals of authorities having jurisdiction.
7. Requested substitution is compatible with other portions of the Work.
8. Requested substitution has been coordinated with other portions of the Work.
9. Requested substitution provides specified warranty.
10. If requested substitution involves more than one contractor, requested substitution has been coordinated with other portions of the Work, is uniform and consistent, is compatible with other products, and is acceptable to all contractors involved.

2.3 COMPARABLE PRODUCTS

A. Conditions: Architect/Engineer will consider Contractor's request for comparable product when the following conditions are satisfied. If the following conditions are not satisfied, Architect will return requests without action, except to record noncompliance with these requirements:

1. Evidence that the proposed product does not require extensive revisions to the Contract Documents that it is consistent with the Contract Documents and will produce the indicated results, and that it is compatible with other portions of the Work.
2. Detailed comparison of significant qualities of proposed product with those named in the Specifications. Significant qualities include attributes such as performance, weight, size, durability, visual effect, and specified features and requirements indicated.
3. Evidence that proposed product provides specified warranty.
4. List of similar installations for completed projects with project names and addresses and names and addresses of architects and owners, if requested.
5. Samples, if requested.

PART 3 - EXECUTION (Not Used)

NOT FOR BID

Knowledge for Creating and Sustaining the Built Environment

SUBSTITUTION REQUEST

(After the Bidding/Negotiating Phase)

NOT FOR BID

Project: _____ Substitution Request Number: _____

_____ From: _____

To: _____ Date: _____

_____ A/E Project Number: _____

Re: _____ Contract For: _____

Specification Title: _____ Description: _____

Section: _____ Page: _____ Article/Paragraph: _____

Proposed Substitution: _____

Manufacturer: _____ Phone: _____

Address: _____

Trade Name: _____ Model No.: _____

Installer: _____ Phone: _____

Address: _____

History: ☐ New product ☐ 1-4 years old ☐ 5-10 years old ☐ More than 10 years old

Differences between proposed substitution and specified product:

☐ Point-by-point comparative data attached — REQUIRED BY A/E

Reason for not providing specified item:

Similar Installation:

Project: _____ Architect: _____

Address: _____ Owner: _____

_____ Date Installed: _____

Proposed substitution affects other parts of Work: ☐ No ☐ Yes; explain _____

Savings to Owner for accepting substitution: _____ ($ _____).

Proposed substitution changes Contract Time: ☐ No ☐ Yes [Add] [Deduct] _____ days.

Supporting Data Attached: ☐ Drawings ☐ Product Data ☐ Samples ☐ Tests ☐ Reports ☐ _____

© Copyright 2007, Construction Specifications Institute,
99 Canal Center Plaza, Suite 300, Alexandria, VA 22314

Page 1 of 2

Form Version: June 2004
CSI Form 13.1A

SUBSTITUTION REQUEST

(After the Bidding/Negotiating Phase — Continued)

The Undersigned certifies:

- Proposed substitution has been fully investigated and determined to be equal or superior in all respects to specified product.
- Same warranty will be furnished for proposed substitution as for specified product.
- Same maintenance service and source of replacement parts, as applicable, is available.
- Proposed substitution will have no adverse effect on other trades and will not affect or delay progress schedule.
- Cost data as stated above is complete. Claims for additional costs related to accepted substitution which may subsequently become apparent are to be waived.
- Proposed substitution does not affect dimensions and functional clearances.
- Payment will be made for changes to building design, including A/E design, detailing, and construction costs caused by the substitution.
- Coordination, installation, and changes in the Work as necessary for accepted substitution will be complete in all respects.

Submitted by: _____

Signed by: _____

Firm: _____

Address: _____

_____

Telephone: _____

Attachments: ☐

A/E's REVIEW AND ACTION

☐ Substitution approved - Make submittals in accordance with Specification Section 01 25 00 Substitution Procedures.
☐ Substitution approved as noted - Make submittals in accordance with Specification Section 01 25 00 Substitution Procedures.
☐ Substitution rejected - Use specified materials.
☐ Substitution Request received too late - Use specified materials.

Signed by: _____ Date: _____

Additional Comments: ☐ Contractor ☐ Subcontractor ☐ Supplier ☐ Manufacturer ☐ A/E
☐ Other:

© Copyright 2007, Construction Specifications Institute,
99 Canal Center Plaza, Suite 300, Alexandria, VA 22314

Page 2 of 2

Form Version: June 2004
CSI Form 13.1A

NOT FOR BID

END OF SECTION 016000

NOT FOR BID

SECTION 017300 - EXECUTION REQUIREMENTS

PART 1 - GENERAL

1.1 RELATED DOCUMENTS

A. Drawings and general provisions of the Contract, including General and Supplementary Conditions and other Division 1 Specification Sections, apply to this Section.

1.2 SUMMARY

A. This Section includes general procedural requirements governing execution of the Work including, but not limited to, the following:

1. Construction layout.
2. General installation of products.
3. Coordination of Owner-installed products.
4. Progress cleaning.
5. Starting and adjusting.
6. Protection of installed construction.
7. Correction of the Work.

B. Related Sections include the following:

1. Division 1 Section "Project Management and Coordination" for procedures for coordinating field engineering with other construction activities.
2. Division 1 Section "Cutting and Patching" for procedural requirements for cutting and patching necessary for the installation or performance of other components of the Work.
3. Division 1 Section "Closeout Procedures" for submitting final property survey with Project Record Documents, recording of Owner-accepted deviations from indicated lines and levels, and final cleaning.
4. Division 02 Section "Selective Demolition" for demolition and removal of selected portions of the building.

PART 2 - PRODUCTS (Not Used)

PART 3 - EXECUTION

3.1 EXAMINATION

A. Existing Conditions: The existence and location of site improvements, utilities, and other construction indicated as existing are not guaranteed. Before beginning work, investigate and verify the existence and location of mechanical and electrical systems and other construction affecting the Work.

1. Before construction, verify the location and points of connection of utility services.

B. Existing Utilities: The existence and location of underground and other utilities and construction indicated as existing are not guaranteed. Before beginning sitework, investigate and verify the existence and location of underground utilities and other construction affecting the Work.

1. Before construction, verify the location and invert elevation at points of connection of sanitary sewer, storm sewer, and water-service piping; and underground electrical services.
2. Furnish location data for work related to Project that must be performed by public utilities serving Project site.

C. Acceptance of Conditions: Examine substrates, areas, and conditions, with Installer or Applicator present where indicated, for compliance with requirements for installation tolerances and other conditions affecting performance. Record observations.

1. Written Report: Where a written report listing conditions detrimental to performance of the Work is required by other Sections, include the following:

   a. Description of the Work.
   b. List of detrimental conditions, including substrates.
   c. List of unacceptable installation tolerances.
   d. Recommended corrections.

2. Verify compatibility with and suitability of substrates, including compatibility with existing finishes or primers.
3. Examine roughing-in for mechanical and electrical systems to verify actual locations of connections before equipment and fixture installation.
4. Examine walls, floors, and roofs for suitable conditions where products and systems are to be installed.
5. Proceed with installation only after unsatisfactory conditions have been corrected. Proceeding with the Work indicates acceptance of surfaces and conditions.

NOT FOR BID

NOT FOR BID

3.2 PREPARATION

A. Existing Utility Information: Furnish information to local utility that is necessary to adjust, move, or relocate existing utility structures, utility poles, lines, services, or other utility appurtenances located in or affected by construction. Coordinate with authorities having jurisdiction.

B. Field Measurements: Take field measurements as required to fit the Work properly. Recheck measurements before installing each product. Where portions of the Work are indicated to fit to other construction, verify dimensions of other construction by field measurements before fabrication. Coordinate fabrication schedule with construction progress to avoid delaying the Work.

C. Space Requirements: Verify space requirements and dimensions of items shown diagrammatically on Drawings.

D. Review of Contract Documents and Field Conditions: Immediately on discovery of the need for clarification of the Contract Documents, submit a request for information to Architect. Include a detailed description of problem encountered, together with recommendations for changing the Contract Documents. Submit requests on CSI Form 13.2A, "Request for Interpretation."

3.3 CONSTRUCTION LAYOUT

A. Verification: Before proceeding to lay out the Work, verify layout information shown on Drawings, in relation to the property survey and existing benchmarks. If discrepancies are discovered, notify Architect promptly.

B. Site Improvements: Locate and lay out site improvements, including pavements, grading, fill and topsoil placement, utility slopes, and invert elevations.

C. Building Lines and Levels: Locate and lay out control lines and levels for foundations including those required for mechanical and electrical work. Transfer survey markings and elevations for use with control lines and levels. Level foundations from two or more locations.

D. Record Log: Maintain a log of layout control work. Record deviations from required lines and levels. Include beginning and ending dates and times of surveys, weather conditions, name and duty of each survey party member, and types of instruments and tapes used. Make the log available for reference by Architect.

3.4 INSTALLATION

A. General: Locate the Work and components of the Work accurately, in correct alignment and elevation, as indicated.

1. Make vertical work plumb and make horizontal work level.
2. Where space is limited, install components to maximize space available for maintenance and ease of removal for replacement.

3. Conceal pipes, ducts, and wiring in finished areas, unless otherwise indicated.
4. Maintain minimum headroom clearance of 8 feet (2.4 m) in spaces without a suspended ceiling.

B. Comply with manufacturer's written instructions and recommendations for installing products in applications indicated.

C. Install products at the time and under conditions that will ensure the best possible results. Maintain conditions required for product performance until Substantial Completion.

D. Conduct construction operations so no part of the Work is subjected to damaging operations or loading in excess of that expected during normal conditions of occupancy.

E. Tools and Equipment: Do not use tools or equipment that produces harmful noise levels.

F. Templates: Obtain and distribute to the parties involved templates for work specified to be factory prepared and field installed. Check Shop Drawings of other work to confirm that adequate provisions are made for locating and installing products to comply with indicated requirements.

G. Anchors and Fasteners: Provide anchors and fasteners as required to anchor each component securely in place, accurately located and aligned with other portions of the Work.

1. Mounting Heights: Where mounting heights are not indicated, mount components at heights directed by Architect/engineer.
2. Allow for building movement, including thermal expansion and contraction.
3. Coordinate installation of anchorages. Furnish setting drawings, templates, and directions for installing anchorages, including sleeves, concrete inserts, anchor bolts, and items with integral anchors, that are to be embedded in concrete or masonry. Deliver such items to Project site in time for installation.

H. Joints: Make joints of uniform width. Where joint locations in exposed work are not indicated, arrange joints for the best visual effect. Fit exposed connections together to form hairline joints.

I. Hazardous Materials: Use products, cleaners, and installation materials that are not considered hazardous.

3.5 OWNER-INSTALLED PRODUCTS

A. Site Access: Provide access to Project site for Owner's construction forces.

B. Coordination: Coordinate construction and operations of the Work with work performed by Owner's construction forces.

1. Construction Schedule: Inform Owner of Contractor's preferred construction schedule for Owner's portion of the Work. Adjust construction schedule based on a mutually agreeable timetable. Notify Owner if changes to schedule are required due to differences in actual construction progress.

NOT FOR BID

2. Preinstallation Conferences: Include Owner's construction forces at preinstallation conferences covering portions of the Work that are to receive Owner's work. Attend preinstallation conferences conducted by Owner's construction forces if portions of the Work depend on Owner's construction.

NOT FOR BID

3.6 PROGRESS CLEANING

A. General: Clean Project site and work areas daily, including common areas. Coordinate progress cleaning for joint-use areas where more than one installer has worked. Enforce requirements strictly. Dispose of materials lawfully.

1. Comply with requirements in NFPA 241 for removal of combustible waste materials and debris.
2. Do not hold materials more than 7 days during normal weather or 3 days if the temperature is expected to rise above 80 deg F (27 deg C).
3. Containerize hazardous and unsanitary waste materials separately from other waste. Mark containers appropriately and dispose of legally, according to regulations.

B. Site: Maintain Project site free of waste materials and debris.

C. Work Areas: Clean areas where work is in progress to the level of cleanliness necessary for proper execution of the Work.

1. Remove liquid spills promptly.
2. Where dust would impair proper execution of the Work, broom-clean or vacuum the entire work area, as appropriate.

D. Installed Work: Keep installed work clean. Clean installed surfaces according to written instructions of manufacturer or fabricator of product installed, using only cleaning materials specifically recommended. If specific cleaning materials are not recommended, use cleaning materials that are not hazardous to health or property and that will not damage exposed surfaces.

E. Concealed Spaces: Remove debris from concealed spaces before enclosing the space.

F. Exposed Surfaces in Finished Areas: Clean exposed surfaces and protect as necessary to ensure freedom from damage and deterioration at time of Substantial Completion.

G. Waste Disposal: Burying or burning waste materials on-site will not be permitted. Washing waste materials down sewers or into waterways will not be permitted.

H. During handling and installation, clean and protect construction in progress and adjoining materials already in place. Apply protective covering where required to ensure protection from damage or deterioration at Substantial Completion.

I. Clean and provide maintenance on completed construction as frequently as necessary through the remainder of the construction period. Adjust and lubricate operable components to ensure operability without damaging effects.

J. Limiting Exposures: Supervise construction operations to assure that no part of the construction, completed or in progress, is subject to harmful, dangerous, damaging, or otherwise deleterious exposure during the construction period.

3.7 PROTECTION OF INSTALLED CONSTRUCTION

A. Provide final protection and maintain conditions that ensure installed Work is without damage or deterioration at time of Substantial Completion.

B. Comply with manufacturer's written instructions for temperature and relative humidity.

3.8 CORRECTION OF THE WORK

A. Repair or remove and replace defective construction. Restore damaged substrates and finishes. Comply with requirements in Division 1 Section "Cutting and Patching."

1. Repairing includes replacing defective parts, refinishing damaged surfaces, touching up with matching materials, and properly adjusting operating equipment.

B. Restore permanent facilities used during construction to their specified condition.

C. Remove and replace damaged surfaces that are exposed to view if surfaces cannot be repaired without visible evidence of repair.

END OF SECTION 017000

NOT FOR BID

NOT FOR BID

SECTION 017329 - CUTTING AND PATCHING

PART 1 - GENERAL

1.1 RELATED DOCUMENTS

A. Drawings and general provisions of the Contract, including General and Supplementary Conditions and other Division 1 Specification Sections, apply to this Section.

1.2 SUMMARY

A. This Section includes procedural requirements for cutting and patching.

B. Related Sections include the but are not limited to the following:

1. Division 2 Section "Selective Demolition" for demolition of selected portions of the building for alterations.

1.3 DEFINITIONS

A. Cutting: Removal of existing construction necessary to permit installation or performance of other Work.

B. Patching: Fitting and repair work required to restore surfaces to original conditions after installation of other Work.

1.4 QUALITY ASSURANCE

A. Structural Elements: Do not cut and patch structural elements in a manner that could change their load-carrying capacity or load-deflection ratio.

B. Operational Elements: Do not cut and patch the following operating elements and related components in a manner that results in reducing their capacity to perform as intended or that result in increased maintenance or decreased operational life or safety.

1. Primary operational systems and equipment.
2. Fire-protection systems.
3. Control systems.
4. Communication systems.
5. Electrical wiring systems.

C. Miscellaneous Elements: Do not cut and patch the following elements or related components in a manner that could change their load-carrying capacity, which results in reducing their capacity

to perform as intended, or that result in increased maintenance or decreased operational life or safety.

1. Water, moisture, or vapor barriers.
2. Membranes and flashings.
3. Piping and ductwork.

D. Visual Requirements: Do not cut and patch construction in a manner that results in visual evidence of cutting and patching. Do not cut and patch construction exposed on the exterior or in occupied spaces in a manner that would, in Architect's opinion, reduce the building's aesthetic qualities. Remove and replace construction that has been cut and patched in a visually unsatisfactory manner.

E. Cutting and Patching Conference: Before proceeding, meet at Project site with parties involved in cutting and patching, including mechanical and electrical trades. Review areas of potential interference and conflict. Coordinate procedures and resolve potential conflicts before proceeding.

NOT FOR BID

PART 2 - PRODUCTS

2.1 MATERIALS

A. General: Comply with requirements specified in other Sections of these Specifications.

B. Existing Materials: Use materials identical to existing materials. For exposed surfaces, use materials that visually match existing adjacent surfaces to the fullest extent possible.

1. If identical materials are unavailable or cannot be used, use materials that, when installed, will match the visual and functional performance of existing materials.

PART 3 - EXECUTION

3.1 EXAMINATION

A. Examine surfaces to be cut and patched and conditions under which cutting and patching are to be performed.

1. Compatibility: Before patching, verify compatibility with and suitability of substrates, including compatibility with existing finishes or primers.
2. Proceed with installation only after unsafe or unsatisfactory conditions have been corrected.

3.2 PREPARATION

A. Temporary Support: Provide temporary support of Work to be cut.

B. Protection: Protect existing construction during cutting and patching to prevent damage. Provide protection from adverse weather conditions for portions of Project that might be exposed during cutting and patching operations.

C. Adjoining Areas: Avoid interference with use of adjoining areas or interruption of free passage to adjoining areas.

3.3 PERFORMANCE

A. General: Employ skilled workers to perform cutting and patching. Proceed with cutting and patching at the earliest feasible time, and complete without delay.

1. Cut existing construction to provide for installation of other components or performance of other construction, and subsequently patch as required to restore surfaces to their original condition.

B. Cutting: Cut existing construction by sawing, drilling, breaking, chipping, grinding, and similar operations, including excavation, using methods least likely to damage elements retained or adjoining construction. If possible, review proposed procedures with original Installer; comply with original Installer's written recommendations.

1. In general, use hand or small power tools designed for sawing and grinding, not hammering and chopping. Cut holes and slots as small as possible, neatly to size required, and with minimum disturbance of adjacent surfaces. Temporarily cover openings when not in use.
2. Existing Finished Surfaces: Cut or drill from the exposed or finished side into concealed surfaces.
3. Concrete & Masonry: Cut using a cutting machine, such as an abrasive saw or a diamond-core drill.
4. Excavating and Backfilling: Comply with requirements in applicable Division 2 Sections where required by cutting and patching operations.
5. Proceed with patching after construction operations requiring cutting are complete.

C. Patching: Patch construction by filling, repairing, refinishing, closing up, and similar operations following performance of other Work. Patch with durable seams that are as invisible as possible. Provide materials and comply with installation requirements specified in other Sections of these Specifications.

1. Inspection: Where feasible, test and inspect patched areas after completion to demonstrate integrity of installation.
2. Exposed Finishes: Restore exposed finishes of patched areas and extend finish restoration into retained adjoining construction in a manner that will eliminate evidence of patching and refinishing.

NOT FOR BID

3. Floors and Walls: Where walls or partitions that are removed extend one finished area into another, patch and repair floor and wall surfaces in the new space. Provide an even surface of uniform finish, color, texture, and appearance. Remove existing floor and wall coverings and replace with new materials, if necessary, to achieve uniform color and appearance.

    a. Where patching occurs in a painted surface, apply primer and intermediate paint coats over the patch and apply final paint coat over entire unbroken surface containing the patch. Provide additional coats until patch blends with adjacent surfaces.

4. Ceilings: Patch, repair, or rehang existing ceilings as necessary to provide an even-plane surface of uniform appearance.
5. Exterior Building Enclosure: Patch components in a manner that restores enclosure to a weathertight condition.

END OF SECTION 017329

NOT FOR BID

NOT FOR BID

SECTION 017419 - CONSTRUCTION WASTE MANAGEMENT AND DISPOSAL

PART 1 - GENERAL

1.1 RELATED DOCUMENTS

A. Drawings and general provisions of the Contract, including General and Supplementary Conditions and other Division 01 Specification Sections, apply to this Section.

1.2 SUMMARY

A. Section includes administrative and procedural requirements for the following:

1. Salvaging nonhazardous demolition and construction waste.
2. Recycling nonhazardous demolition and construction waste.
3. Disposing of nonhazardous demolition and construction waste.

B. Related Requirements:

1. Section 024119 "Selective Demolition" for disposition of waste resulting from partial demolition of buildings, structures, and site improvements.
2. Section 042000 "Unit Masonry" for disposal requirements for masonry waste.

1.3 DEFINITIONS

A. Construction, Demolition and Land Clearing (CDL) Waste: Includes all non-hazardous solid wastes resulting from construction, remodeling, alterations, repair, demolition and land clearing. Includes material that is recycled, reused, salvaged or disposed as garbage. Construction waste includes packaging.

B. Disposal: Removal off-site of demolition and construction waste and subsequent sale, recycling, reuse, or deposit in landfill or incinerator acceptable to authorities having jurisdiction.

C. Recycle: The process of sorting, treating and reconstituting materials for the purpose of using the material in the manufacture of a new product.

D. Reuse: Making use of a material without altering its form. Materials can be reused on-site or reused on other projects off-site. Examples include, but are not limited to the following: Crushing or grinding of concrete for use as sub-base material. Chipping of land clearing debris for use of mulch.

E. Salvage: Recovery of demolition or construction waste and subsequent sale, reuse in another facility or sale to a third party.

F. Salvage and Reuse: Recovery of demolition or construction waste and subsequent incorporation into the Work.

G. Source-Separated CDL Recycling: The process of separating recyclable materials in separate containers as they are generated on the job-site. The separated materials are hauled directly to a recycling facility or transfer station.

H. Co-mingled CDL Recycling: The process of collecting mixed recyclable materials in one container on-site. The container is taken to a material recovery facility where materials are separated for recycling.

I. Approved Recycling Facility: Any of the following:

1. A facility that can legally accept CDL waste materials for the purpose of processing the materials into an altered form for the manufacture of a new product.
2. Material Recovery Facility: A general term used to describe a waste-sorting facility. Mechanical, hand-separation, or a combination of both procedures, are used to recover recyclable materials.

NOT FOR BID

1.4 PERFORMANCE REQUIREMENTS

A. General: Achieve end-of-Project rates for salvage/recycling of 75 percent CDL waste by weight from the landfill by one or a combination of the following activities:

1. Salvage.
2. Reuse.
3. Source-Separated CDL Recycling.
4. Co-mingled CDL Recycling.

B. CDL waste materials that can be salvaged, reused or recycled include, but are not limited to, the following:

1. Demolition Waste:

a. Acoustical ceiling tiles.
b. Asphalt paving.
c. Asphalt shingles.
d. Carpet and carpet pad.
e. Concrete.
f. Concrete reinforcing steel.
g. Concrete masonry units.
h. Doors and frames.
i. Door hardware.
j. Field office waste including office paper, cans, plastic and office cardboard.
k. Fluorescent lamps and ballasts.
l. Glazing.
m. Gypsum board.

n. Insulation.
o. Land clearing debris (vegetation, stumpage, dirt, etc.).
p. Membrane and built-up Roofing.
q. Metals.
r. Metal studs.
s. Paint (through hazardous waste outlets).
t. Plastic film (sheeting, shrink wrap and packaging),
u. Plywood and oriented strand board.
v. Rough hardware.
w. Structural and miscellaneous steel.
x. Windows.
y. Wood.
z. Equipment.
aa. Piping.
bb. Supports and hangers.
cc. Valves.
dd. Sprinklers.
ee. Mechanical equipment.
ff. Refrigerants.
gg. Electrical conduit.
hh. Copper wiring.
ii. Lighting fixtures.
jj. Electrical devices.
kk. Switchgear and panelboards.
ll. Transformers.

2. Construction Waste:

a. Acoustical ceiling tiles.
b. Asphalt paving.
c. Asphalt shingles.
d. Carpet and carpet pad.
e. Concrete.
f. Concrete reinforcing steel.
g. Concrete masonry units.
h. Doors and frames.
i. Door hardware.
j. Field office waste including office paper, cans, plastic and office cardboard.
k. Fluorescent lamps and ballasts.
l. Glazing.
m. Gypsum board.
n. Insulation.
o. Land clearing debris (vegetation, stumpage, dirt, etc.).
p. Membrane and built-up Roofing.
q. Metals.
r. Metal studs.
s. Paint (through hazardous waste outlets).
t. Plastic film (sheeting, shrink wrap and packaging),

NOT FOR BID

u. Plywood and oriented strand board.
v. Rough hardware.
w. Structural and miscellaneous steel.
x. Windows.
y. Wood.
z. Piping.
aa. Electrical conduit.
bb. Packaging: Regardless of salvage/recycle goal indicated in "General" Paragraph above, salvage or recycle 100 percent of the following uncontaminated packaging materials:

1) Paper.
2) Cardboard.
3) Boxes.
4) Plastic sheet and film.
5) Polystyrene packaging.
6) Wood crates.
7) Plastic pail.

NOT FOR BID

1.5 ACTION SUBMITTALS

A. Waste Management Plan: Submit plan within 30 days of date established for the Notice of Award.

B. Waste Management Report: Submit report with each application for payment.

1.6 INFORMATIONAL SUBMITTALS

A. Waste Reduction Progress Reports: Concurrent with each Application for Payment, submit report:

1. Material category.
2. Generation point of waste.
3. Total quantity of waste in tons (tonnes).
4. Quantity of waste salvaged, both estimated and actual in tons (tonnes).
5. Quantity of waste recycled, both estimated and actual in tons (tonnes).
6. Total quantity of waste recovered (salvaged plus recycled) in tons (tonnes).
7. Total quantity of waste recovered (salvaged plus recycled) as a percentage of total waste.

B. Records of Donations: Indicate receipt and acceptance of salvageable waste donated to individuals and organizations. Indicate whether organization is tax exempt.

C. Records of Sales: Indicate receipt and acceptance of salvageable waste sold to individuals and organizations. Indicate whether organization is tax exempt.

D. Recycling and Processing Facility Records: Indicate receipt and acceptance of recyclable waste by recycling and processing facilities licensed to accept them. Include manifests, weight tickets, receipts, and invoices.

E. Landfill and Incinerator Disposal Records: Indicate receipt and acceptance of waste by landfills and incinerator facilities licensed to accept them. Include manifests, weight tickets, receipts, and invoices.

F. Qualification Data: For refrigerant recovery technician.

G. Statement of Refrigerant Recovery: Signed by refrigerant recovery technician responsible for recovering refrigerant, stating that all refrigerant that was present was recovered and that recovery was performed according to EPA regulations. Include name and address of technician and date refrigerant was recovered.

NOT FOR BID

1.7 QUALITY ASSURANCE

A. Waste Management Coordinator Qualifications: Experienced firm, with a record of successful waste management coordination of projects with similar requirements, that employs a LEED Accredited Professional, certified by the USGBC as waste management coordinator.

B. Refrigerant Recovery Technician Qualifications: Certified by EPA-approved certification program.

C. Regulatory Requirements: Conduct construction waste management activities in accordance with hauling and disposal regulations of all authorities having jurisdiction and all other applicable laws and ordinances.

D. Waste Management Conference: Conduct conference at Project site to comply with requirements in Section 013100 "Project Management and Coordination." Review methods and procedures related to waste management including, but not limited to, the following:

1. Review and discuss waste management plan including responsibilities of waste management coordinator.
2. Review requirements for documenting quantities of each type of waste and its disposition.
3. Review and finalize procedures for materials separation and verify availability of containers and bins needed to avoid delays.
4. Review procedures for periodic waste collection and transportation to recycling and disposal facilities.
5. Review waste management requirements for each trade.
6. Attendees: Inform the following individuals, whose presence is required, of date and time of meeting.

a. Owner.
b. Architect/Engineer.
c. Contractor's superintendent.

d. Major subcontractors.
e. Waste Management Coordinator.
f. Other concerned parties.

7. Minutes: Record discussion. Distribute meeting minutes to all participants. Note: If there is an Architectural/Engineering consultant contracted by the State of Delaware, they will perform this role.

NOT FOR BID

1.8 WASTE MANAGEMENT PLAN

A. General: Develop a waste management plan according to ASTM E 1609 and requirements in this Section. Plan shall consist of waste identification, waste reduction work plan, and cost/revenue analysis. Distinguish between demolition and construction waste. Indicate quantities by weight or volume, but use same units of measure throughout waste management plan.

B. Waste Identification: Indicate anticipated types and quantities of demolition, site-clearing and construction waste generated by the Work. List all assumptions made for the quantities estimates.

C. Waste Reduction Work Plan: List each type of waste and whether it will be salvaged, recycled, or disposed of in landfill or incinerator. The plan shall include the following information:

1. Types and estimated quantities, by weight, of CDL waste expected to be generated during demolition and construction.
2. Proposed methods for CDL waste salvage, reuse, recycling and disposal during demolition including, but not limited to, one or more of the following:

a. Contracting with a deconstruction specialist to salvage materials generated,
b. Selective salvage as part of demolition contractor's work,
c. Reuse of materials on-site or sale or donation to a third party.

3. Proposed methods for salvage, reuse, recycling and disposal during construction including, but not limited to, one or more of the following:

a. Requiring subcontractors to take their CDL waste to a recycling facility;
b. Contracting with a recycling hauler to haul recyclable CDL waste to an approved recycling or material recovery facility;
c. Processing and reusing materials on-site;
d. Self-hauling to a recycling or material recovery facility.

4. Name of recycling or material recovery facility receiving the CDL wastes.
5. Handling and Transportation Procedures: Include method that will be used for separating recyclable waste including sizes of containers, container labeling, and designated location on project site where materials separation will be located.

D. Cost/Revenue Analysis: Indicate total cost of waste disposal as if there was no waste management plan and net additional cost or net savings resulting from implementing waste management plan. Include the following:

1. Total quantity of waste.
2. Estimated cost of disposal (cost per unit). Include hauling and tipping fees and cost of collection containers for each type of waste.
3. Total cost of disposal (with no waste management).
4. Revenue from salvaged materials.
5. Revenue from recycled materials.
6. Savings in hauling and tipping fees by diverting materials.
7. Savings in hauling and tipping fees that are avoided.
8. Handling and transportation costs including cost of collection containers for each type of waste.
9. Net additional cost or net savings from waste management plan.

NOT FOR BID

PART 2 - PRODUCTS (Not Used)

PART 3 - EXECUTION

3.1 CONSTRUCTION WASTE MANAGEMENT, GENERAL

A. Provide containers for CDL waste that is to be recycled clearly labeled as such with a list of acceptable and unacceptable materials. The list of acceptable materials must be the same as the materials recycled at the receiving material recovery facility or recycling processor.

B. The collection containers for recyclable CDL waste must contain no more than 10% non-recyclable materials, by volume.

C. Provide containers for CDL waste that is disposed in a landfill clearly labeled as such.

D. Use detailed material estimates to reduce risk of unplanned and potentially wasteful cuts.

E. To the greatest extent possible, include in material purchasing agreements a waste reduction provision requesting that materials and equipment be delivered in packaging made of recyclable material, that they reduce the amount of packaging, that packaging be taken back for reuse or recycling, and to take back all unused product. Insure that subcontractors require the same provisions in their purchase agreements.

F. Conduct regular visual inspections of dumpsters and recycling bins to remove contaminants.

3.2 SOURCE SEPARATION

A. General: Contractor shall separate recyclable materials from CDL waste to the maximum extent possible. Separate recyclable materials by type.

1. Provide containers, clearly labeled, by type of separated materials or provide other storage method for managing recyclable materials until they are removed from Project site.
2. Stockpile processed materials on-site without intermixing with other materials. Place, grade, and shape stockpiles to drain surface water and to minimize pest attraction. Cover to prevent windblown dust.
3. Stockpile materials away from demolition area. Do not store within drip line of remaining trees.
4. Store components off the ground and protect from weather.

NOT FOR BID

3.3 CO-MINGLED RECYCLING

A. General: Do not put CDL waste that will be disposed in a landfill into a co-mingled CDL waste recycling container.

3.4 REMOVAL OF CONSTRUCTION WASTE MATERIALS

A. Remove CDL waste materials from project site on a regular basis. Do not allow CDL waste to accumulate on-site.

B. Transport CDL waste materials off Owner's property and legally dispose of them.

C. Burning of CDL waste is not permitted.

WASTE MANAGEMENT PROGRESS REPORT					
		Disposed in Municipal Solid Waste landfill	**Diverted from Landfill by Recycling, Salvage or Reuse**		
Material Category			Recycled	Salvaged	Reused
1.	Acoustical Ceiling Tiles				
2.	Asphalt				
3.	Asphalt Shingles				
4.	Cardboard Packaging				
5.	Carpet & Carpet Pad				
6.	Drywall				

7.	Concrete				
8.	Fluorescent Lamps and Ballasts				
9.	Land Clearing Debris (Vegetation, Stumpage & dirt)				
10.	Metals				
11.	Paint (Through Hazardous Waste Outlets)				
12.	Wood				
13.	Plastic Film (Sheeting, Shrink Wrap & Packaging)				
14.	Window Glass				
15.	Field Office waste (Office Paper, Aluminum Cans, Glass, Plastic and Coffee Cardboard)				
16.	Other (Insert Description)				
17.	Other (Insert Description)				
	Total (In Weight)		(TOTAL OF ALL ABOVE VALUES – IN WEIGHT)		
Percentage of Waste Diverted			(TOTAL WASTE DIVIDED BY TOTAL DIVERTED)		

NOT FOR BID

END OF SECTION 017419

(THIS PAGE INTENTIONALLY LEFT BLANK)

NOT FOR BID

NOT FOR BID

SECTION 017700 - CLOSEOUT PROCEDURES

PART 1 - GENERAL

1.1 RELATED DOCUMENTS

A. Drawings and general provisions of the Contract, including General and Supplementary Conditions and other Division 1 Specification Sections, apply to this Section.

1.2 SUMMARY

A. This Section includes administrative and procedural requirements for contract closeout, including, but not limited to, the following:

1. Inspection procedures.
2. Project Record Documents.
3. Operation and maintenance manuals.
4. Warranties.
5. Instruction of Owner's personnel.
6. Final cleaning.

B. Related Sections include the following:

1. Division 1 Section "Payment Procedures" for requirements for Applications for Payment for Substantial and Final Completion.
2. Division 1 Section "Project Record Documents" for submitting Record Drawings, Record Specifications, and Record Product Data.
3. Division 1 Section "Operation and Maintenance Data" for operation and maintenance manual requirements.
4. Divisions 02 through 33 Sections for specific closeout and special cleaning requirements for the Work in those Sections.

1.3 SUBSTANTIAL COMPLETION

A. Preliminary Procedures: Before requesting inspection for determining date of Substantial Completion, complete the following. List items below that are incomplete in request.

1. Prepare a list of items to be completed and corrected (punch list), the value of items on the list, and reasons why the Work is not complete.
2. Advise Owner of pending insurance changeover requirements.
3. Submit specific warranties, workmanship bonds, maintenance service agreements, final certifications, and similar documents.
4. Obtain and submit releases permitting Owner unrestricted use of the Work and access to services and utilities. Include occupancy permits, operating certificates, and similar releases.

5. Prepare and submit Project Record Documents, operation and maintenance manuals, damage or settlement surveys, and similar final record information.
6. Deliver tools, spare parts, extra materials, and similar items to location designated by Owner. Label with manufacturer's name and model number where applicable.
7. Complete startup testing of systems.
8. Submit test/adjust/balance records.
9. Terminate and remove temporary facilities from Project site, along with mockups, construction tools, and similar elements.
10. Advise Owner of changeover in heat and other utilities.
11. Submit changeover information related to Owner's occupancy, use, operation, and maintenance.
12. Complete final cleaning requirements, including touchup painting.
13. Touch up and otherwise repair and restore marred exposed finishes to eliminate visual defects.

B. Inspection: Submit a written request for inspection for Substantial Completion. On receipt of request, Architect/Engineer will either proceed with inspection or notify Contractor of unfulfilled requirements. Architect/Engineer will prepare the Certificate of Substantial Completion after inspection or will notify Contractor of items, either on Contractor's list or additional items identified by Architect/Engineer, that must be completed or corrected before certificate will be issued.

1. Reinspection: Request reinspection when the Work identified in previous inspections as incomplete is completed or corrected.
2. Results of completed inspection will form the basis of requirements for Final Completion.

1.4 FINAL COMPLETION

A. Preliminary Procedures: Before requesting final inspection for determining date of Final Completion, complete the following:

1. Submit a final Application for Payment according to Division 1 Section "Payment Procedures."
2. Submit certified copy of Architect's/Engineer's Substantial Completion inspection list of items to be completed or corrected (punch list), endorsed and dated by Architect/Engineer. The certified copy of the list shall state that each item has been completed or otherwise resolved for acceptance.
3. Submit evidence of final, continuing insurance coverage complying with insurance requirements.
4. Submit pest-control final inspection report and warranty.
5. Instruct Owner's personnel in operation, adjustment, and maintenance of products, equipment, and systems. Submit demonstration and training videotapes.

B. Inspection: Submit a written request for final inspection for acceptance. On receipt of request, Architect/Engineer will either proceed with inspection or notify Contractor of unfulfilled requirements. Architect will prepare a final Certificate for Payment after inspection or will notify Contractor of construction that must be completed or corrected before certificate will be issued.

NOT FOR BID

1. Reinspection: Request reinspection when the Work identified in previous inspections as incomplete is completed or corrected.

1.5 LIST OF INCOMPLETE ITEMS (PUNCH LIST)

A. Preparation: Submit three copies of list. Include name and identification of each space and area affected by construction operations for incomplete items and items needing correction including, if necessary, areas disturbed by Contractor that are outside the limits of construction.

1. Organize list of spaces in sequential order, starting with exterior areas first and proceeding from lowest floor to highest floor.
2. Organize items applying to each space by major element, including categories for ceiling, individual walls, floors, equipment, and building systems.
3. Include the following information at the top of each page:

a. Project name.
b. Date.
c. Name of Architect.
d. Name of Contractor.
e. Page number.

NOT FOR BID

1.6 PROJECT RECORD DOCUMENTS

A. General: Do not use Project Record Documents for construction purposes. Protect Project Record Documents from deterioration and loss. Provide access to Project Record Documents for Architect's reference during normal working hours.

B. Record Drawings: Maintain and submit one original set of blue- or black-line white prints with two copies of Contract Drawings and Shop Drawings.

1. Mark Record Prints to show the actual installation where installation varies from that shown originally. Require individual or entity who obtained record data, whether individual or entity is Installer, subcontractor, or similar entity, to prepare the marked-up Record Prints.

a. Give particular attention to information on concealed elements that cannot be readily identified and recorded later.
b. Accurately record information in an understandable drawing technique.
c. Record data as soon as possible after obtaining it. Record and check the markup before enclosing concealed installations.
d. Mark Contract Drawings or Shop Drawings, whichever is most capable of showing actual physical conditions, completely and accurately. Where Shop Drawings are marked, show cross-reference on Contract Drawings.

2. Mark record sets with erasable, red-colored pencil. Use other colors to distinguish between changes for different categories of the Work at the same location.

3. Mark important additional information that was either shown schematically or omitted from original Drawings.
4. Note Construction Change Directive numbers, Change Order numbers, alternate numbers, and similar identification where applicable.
5. Identify and date each Record Drawing; include the designation "PROJECT RECORD DRAWING" in a prominent location. Organize in manageable sets; bind each set with durable paper cover sheets. Include identification on cover sheets.

C. Record Specifications: Submit one copy of Project's Specifications, including addenda and contract modifications. Mark copy to indicate actual product installation where installation varies from that indicated in Specifications, addenda, and contract modifications.

1. Give particular attention to information on concealed products and installations that cannot be readily identified and recorded later.
2. Mark copy with the proprietary name and model number of products, materials, and equipment furnished, including substitutions and product options selected.
3. Note related Change Orders, Record Drawings, and Product Data, where applicable.

D. Record Product Data: Submit three copies of each Product Data submittal. Mark one set to indicate the actual product installation where installation varies substantially from that indicated in Product Data.

1. Give particular attention to information on concealed products and installations that cannot be readily identified and recorded later.
2. Include significant changes in the product delivered to Project site and changes in manufacturer's written instructions for installation.
3. Note related Change Orders, Record Drawings, and Record Specifications, where applicable.

E. Miscellaneous Record Submittals: Assemble miscellaneous records required by other Specification Sections for miscellaneous record keeping and submittal in connection with actual performance of the Work. Bind or file miscellaneous records and identify each, ready for continued use and reference.

1.7 OPERATION AND MAINTENANCE MANUALS

A. Assemble three complete sets of operation and maintenance data indicating the operation and maintenance of each system, subsystem, and piece of equipment not part of a system. Include operation and maintenance data required in individual Specification Sections and as follows:

1. Maintenance Data:

   a. Manufacturer's information, including list of spare parts.
   b. Name, address, and telephone number of Installer or supplier.
   c. Maintenance procedures.
   d. Maintenance and service schedules for preventive and routine maintenance.
   e. Maintenance record forms.
   f. Sources of spare parts and maintenance materials.

NOT FOR BID

g. Copies of maintenance service agreements.
h. Copies of warranties and bonds.

B. Organize operation and maintenance manuals into suitable sets of manageable size. Bind and index data in heavy-duty, 3-ring, vinyl-covered, loose-leaf binders, in thickness necessary to accommodate contents, with pocket inside the covers to receive folded oversized sheets. Identify each binder on front and spine with the printed title "OPERATION AND MAINTENANCE MANUAL," Project name, and subject matter of contents.

NOT FOR BID

1.8 WARRANTIES

A. Submittal Time: Submit written warranties on request of Architect for designated portions of the Work where commencement of warranties other than date of Substantial Completion is indicated.

B. Organize warranty documents into an orderly sequence based on the table of contents of the Project Manual.

1. Bind warranties and bonds in heavy-duty, 3-ring, vinyl-covered, loose-leaf binders, thickness as necessary to accommodate contents, and sized to receive 8-1/2-by-11-inch paper.
2. Provide heavy paper dividers with plastic-covered tabs for each separate warranty. Mark tab to identify the product or installation. Provide a typed description of the product or installation, including the name of the product and the name, address, and telephone number of Installer.
3. Identify each binder on the front and spine with the typed or printed title "WARRANTIES," Project name, and name of Contractor.

C. Provide additional copies of each warranty to include in each operation and maintenance manual.

PART 2 - PRODUCTS

2.1 MATERIALS

A. Cleaning Agents: Use cleaning materials and agents recommended by manufacturer or fabricator of the surface to be cleaned. Do not use cleaning agents that are potentially hazardous to health or property or that might damage finished surfaces.

PART 3 - EXECUTION

3.1 FINAL CLEANING

A. General: Provide final cleaning. Conduct cleaning and waste-removal operations to comply with local laws and ordinances and Federal and local environmental and antipollution regulations.

B. Cleaning: Employ experienced workers or professional cleaners for final cleaning. Clean each surface or unit to condition expected in an average commercial building cleaning and maintenance program. Comply with manufacturer's written instructions.

1. Complete the following cleaning operations before requesting inspection for certification of Substantial Completion for entire Project or for portion of Project:

   a. Clean Project site, yard, and grounds, in areas disturbed by construction activities, including landscape development areas, of rubbish, waste material, litter, and other foreign substances. Provide a magnetic sweep of all areas around the building to retrieve stray nails, screws and other fasteners or metal shards.
   b. Sweep paved areas broom clean. Remove petrochemical spills, stains, and other foreign deposits.
   c. Rake grounds that are neither planted nor paved to a smooth, even-textured surface.
   d. Remove tools, construction equipment, machinery, and surplus material from Project site.
   e. Clean exposed exterior and interior hard-surfaced finishes to a dirt-free condition, free of stains, films, and similar foreign substances. Avoid disturbing natural weathering of exterior surfaces. Restore reflective surfaces to their original condition.
   f. Remove debris and surface dust from limited access spaces, including roofs, plenums, shafts, trenches, equipment vaults, manholes, attics, and similar spaces.
   g. Sweep concrete floors broom clean in unoccupied spaces.
   h. Clean transparent materials, including glass in doors and windows. Remove glazing compounds and other noticeable, vision-obscuring materials. Replace chipped or broken glass and other damaged transparent materials.
   i. Remove labels that are not permanent.
   j. Touch up and otherwise repair and restore marred, exposed finishes and surfaces. Replace finishes and surfaces that cannot be satisfactorily repaired or restored or that already show evidence of repair or restoration.

      1) Do not paint over "UL" and similar labels, including mechanical and electrical nameplates.

   k. Wipe surfaces of mechanical and electrical equipment, and similar equipment. Remove excess lubrication, paint and mortar droppings, and other foreign substances.

C. Comply with safety standards for cleaning. Do not burn waste materials. Do not bury debris or excess materials on Owner's property. Do not discharge volatile, harmful, or dangerous materials into drainage systems. Remove waste materials from Project site and dispose of lawfully.

END OF SECTION 017700

NOT FOR BID

NOT FOR BID

SECTION 017839 - PROJECT RECORD DOCUMENTS

PART 1 - GENERAL

1.1 RELATED DOCUMENTS

A. Drawings and general provisions of the Contract, including General and Supplementary Conditions and other Division 1 Specification Sections, apply to this Section.

1.2 SUMMARY

A. This Section includes administrative and procedural requirements for Project Record Documents, including the following:

1. Record Drawings.
2. Record Specifications.
3. Record Product Data.

B. Related Sections include but are not limited to the following:

1. Division 1 Section "Closeout Procedures" for general closeout procedures and maintenance manual requirements.
2. Division 1 Section "Operation and Maintenance Data" for operation and maintenance manual requirements.
3. Divisions 02 through 33 Sections for specific requirements for project record documents of the Work in those Sections.

1.3 SUBMITTALS

A. Record Drawings: Comply with the following:

1. Number of Copies: Submit copies of Record Drawings as follows:

a. Final Submittal: Submit three sets of marked-up Record Prints and one set of record transparencies. Print each Drawing, whether or not changes and additional information were recorded.

B. Record Specifications: Submit three copies of Project's Specifications, including addenda and contract modifications.

C. Record Product Data: Submit three copies of each Product Data submittal.

1. Where Record Product Data is required as part of operation and maintenance manuals, submit marked-up Product Data as an insert in the manual instead of submittal as Record Product Data.

NOT FOR BID

1.4 RECORD DRAWINGS

A. Record Prints: Maintain one set of blue- or black-line white prints of the Contract Drawings and Shop Drawings.

1. Preparation: Mark Record Prints to show the actual installation where installation varies from that shown originally. Require individual or entity who obtained record data, whether individual or entity is Installer, subcontractor, or similar entity, to prepare the marked-up Record Prints.

   a. Give particular attention to information on concealed elements that would be difficult to identify or measure and record later.
   b. Accurately record information in an understandable drawing technique.
   c. Record data as soon as possible after obtaining it. Record and check the markup before enclosing concealed installations.

2. Content: Types of items requiring marking include, but are not limited to, the following:

   a. Dimensional changes to Drawings.
   b. Revisions to details shown on Drawings.
   c. Depths of foundations below first floor.
   d. Locations and depths of underground utilities.
   e. Revisions to routing of piping and conduits.
   f. Revisions to electrical circuitry.
   g. Actual equipment locations.
   h. Duct size and routing.
   i. Locations of concealed internal utilities.
   j. Changes made by Change Order or Construction Change Directive.
   k. Changes made following Architect's written orders.
   l. Details not on the original Contract Drawings.
   m. Field records for variable and concealed conditions.
   n. Record information on the Work that is shown only schematically.

3. Mark the Contract Drawings or Shop Drawings, whichever is most capable of showing actual physical conditions, completely and accurately. If Shop Drawings are marked, show cross-reference on the Contract Drawings.
4. Mark record sets with erasable, red-colored pencil. Use other colors to distinguish between changes for different categories of the Work at the same location.
5. Mark important additional information that was either shown schematically or omitted from original Drawings.
6. Note Construction Change Directive numbers, alternate numbers, Change Order numbers, and similar identification, where applicable.

B. Record Transparencies: Immediately before inspection for Certificate of Substantial Completion, review marked-up Record Prints with Architect. When authorized, prepare a full set of corrected transparencies of the Contract Drawings and Shop Drawings.

1. Incorporate changes and additional information previously marked on Record Prints. Erase, redraw, and add details and notations where applicable.
2. Refer instances of uncertainty to Architect for resolution.
3. Owner will furnish Contractor one set of transparencies of the Contract Drawings for use in recording information.
4. Print the Contract Drawings and Shop Drawings for use as Record Transparencies. Architect will make the Contract Drawings available to Contractor's print shop.

C. Format: Identify and date each Record Drawing; include the designation "PROJECT RECORD DRAWING" in a prominent location.

1. Record Prints: Organize Record Prints and newly prepared Record Drawings into manageable sets. Bind each set with durable paper cover sheets. Include identification on cover sheets.
2. Record Transparencies: Organize into unbound sets matching Record Prints. Place transparencies in durable tube-type drawing containers with end caps. Mark end cap of each container with identification. If container does not include a complete set, identify Drawings included.
3. Record CAD Drawings: Organize CAD information into separate electronic files that correspond to each sheet of the Contract Drawings. Name each file with the sheet identification. Include identification in each CAD file.
4. Identification: As follows:

   a. Project name.
   b. Date.
   c. Designation "PROJECT RECORD DRAWINGS."
   d. Name of Architect/Engineer.
   e. Name of Contractor.

1.5 RECORD SPECIFICATIONS

A. Preparation: Mark Specifications to indicate the actual product installation where installation varies from that indicated in Specifications, addenda, and contract modifications.

1. Give particular attention to information on concealed products and installations that cannot be readily identified and recorded later.
2. Mark copy with the proprietary name and model number of products, materials, and equipment furnished, including substitutions and product options selected.
3. Record the name of the manufacturer, supplier, Installer, and other information necessary to provide a record of selections made.
4. For each principal product, indicate whether Record Product Data has been submitted in operation and maintenance manuals instead of submitted as Record Product Data.
5. Note related Change Orders, Record Drawings, and Product Data where applicable.

NOT FOR BID

1.6 RECORD PRODUCT DATA

A. Preparation: Mark Product Data to indicate the actual product installation where installation varies substantially from that indicated in Product Data submittal.

1. Give particular attention to information on concealed products and installations that cannot be readily identified and recorded later.
2. Include significant changes in the product delivered to Project site and changes in manufacturer's written instructions for installation.
3. Note related Change Orders, Record Drawings, and Product Data where applicable.

1.7 MISCELLANEOUS RECORD SUBMITTALS

A. Assemble miscellaneous records required by other Specification Sections for miscellaneous record keeping and submittal in connection with actual performance of the Work. Bind or file miscellaneous records and identify each, ready for continued use and reference.

PART 2 - EXECUTION

2.1 RECORDING AND MAINTENANCE

A. Recording: Maintain one copy of each submittal during the construction period for Project Record Document purposes. Post changes and modifications to Project Record Documents as they occur; do not wait until the end of Project.

B. Maintenance of Record Documents and Samples: Store Record Documents and Samples in the field office apart from the Contract Documents used for construction. Do not use Project Record Documents for construction purposes. Maintain Record Documents in good order and in a clean, dry, legible condition, protected from deterioration and loss. Provide access to Project Record Documents for Architect's/Engineer's reference during normal working hours.

END OF SECTION 017839

NOT FOR BID

NOT FOR BID

SECTION 051200 - STRUCTURAL STEEL FRAMING

PART 1 - GENERAL

1.1 SUMMARY

A. Section Includes:

1. Structural steel.

1.2 DEFINITIONS

A. Structural Steel: Elements of the structural frame indicated on Drawings and as described in AISC 303, "Code of Standard Practice for Steel Buildings and Bridges."

1.3 PREINSTALLATION MEETINGS

A. Preinstallation Conference: Conduct conference at Project site.

1.4 ACTION SUBMITTALS

A. Product Data: For each type of product.

B. Shop Drawings: Show fabrication of structural-steel components.

1.5 INFORMATIONAL SUBMITTALS

A. Qualification Data: For fabricator.

B. Welding certificates.

C. Mill test reports for structural steel, including chemical and physical properties.

D. Source quality-control reports.

E. Field quality-control reports.

1.6 QUALITY ASSURANCE

A. Fabricator Qualifications: A qualified fabricator that participates in the AISC Quality Certification Program and is designated an AISC-Certified Plant, Category STD.

B. Installer Qualifications: A qualified installer who participates in the AISC Quality Certification Program and is designated an AISC-Certified Erector, Category CSE.

C. Welding Qualifications: Qualify procedures and personnel according to AWS D1.1/D1.1M, "Structural Welding Code - Steel."

D. Comply with applicable provisions of the following specifications and documents:

1. AISC 303.
2. AISC 360.
3. RCSC's "Specification for Structural Joints Using ASTM A 325 or A 490 Bolts."

NOT FOR BID

PART 2 - PRODUCTS

2.1 PERFORMANCE REQUIREMENTS

A. Construction: Moment frame; Braced frame.

2.2 STRUCTURAL-STEEL MATERIALS

A. W-Shapes: ASTM A242, Grade 50.

B. Channels, Angles, S-Shapes: ASTM A242, Grade 50.

C. Plate and Bar: ASTM A242, Grade 50.

D. Cold-Formed Hollow Structural Sections: ASTM A 847, structural tubing.

E. Steel Pipe: ASTM A 53/A 53M, Type E or Type S, Grade B.

F. Welding Electrodes: Comply with AWS requirements.

2.3 BOLTS, CONNECTORS, AND ANCHORS

A. High-Strength Bolts, Nuts, and Washers: ASTM A 325, Type 3, heavy-hex weathering steel structural bolts; and ASTM F 436, Type 1, hardened carbon-steel washers; all with plain finish.

1. Direct-Tension Indicators: ASTM F 959, Type 325, compressible-washer, weathering steel type.

B. Zinc-Coated High-Strength Bolts, Nuts, and Washers: ASTM A 307, Grade A, heavy-hex steel structural bolts; ASTM A 563A, Grade A-C carbon-steel nuts; and ASTM F 844, carbon-steel washers.

1. Finish: Hot-dip zinc coating Hot-dip or mechanically deposited zinc coating.

C. Tension-Control, High-Strength Bolt-Nut-Washer Assemblies: ASTM F 1852, Type 1, heavy-hex head assemblies consisting of steel structural bolts with splined ends, heavy-hex carbon-steel nuts, and hardened carbon-steel washers.

1. Finish: Plain.

D. Threaded Rods: ASTM A 36/A 36M.

1. Finish: Hot-dip zinc coating, ASTM A 153/A 153M, Class C.

NOT FOR BID

2.4 FABRICATION

A. Structural Steel: Fabricate and assemble in shop to greatest extent possible. Fabricate according to AISC 303, "Code of Standard Practice for Steel Buildings and Bridges," and to AISC 360.

2.5 SHOP CONNECTIONS

A. High-Strength Bolts: Shop install high-strength bolts according to RCSC's "Specification for Structural Joints Using ASTM A 325 or A 490 Bolts" for type of bolt and type of joint specified.

1. Joint Type: Snug tightened.

B. Weld Connections: Comply with AWS D1.1/D1.1M for tolerances, appearances, welding procedure specifications, weld quality, and methods used in correcting welding work.

2.6 SOURCE QUALITY CONTROL

A. Testing Agency: Engage a qualified testing agency to perform shop tests and inspections.

1. Provide testing agency with access to places where structural-steel work is being fabricated or produced to perform tests and inspections.

B. Bolted Connections: Inspect shop-bolted connections according to RCSC's "Specification for Structural Joints Using ASTM A 325 or A 490 Bolts."

C. Welded Connections: Visually inspect shop-welded connections according to AWS D1.1/D1.1M and the following inspection procedures, at testing agency's option:

1. Liquid Penetrant Inspection: ASTM E 165.
2. Magnetic Particle Inspection: ASTM E 709; performed on root pass and on finished weld. Cracks or zones of incomplete fusion or penetration are not accepted.
3. Ultrasonic Inspection: ASTM E 164.
4. Radiographic Inspection: ASTM E 94.

D. Prepare test and inspection reports.

PART 3 - EXECUTION

3.1 EXAMINATION

A. Verify, with certified steel erector present, elevations of concrete- and masonry-bearing surfaces and locations of anchor rods, bearing plates, and other embedments for compliance with requirements.

B. Proceed with installation only after unsatisfactory conditions have been corrected.

3.2 ERECTION

A. Set structural steel accurately in locations and to elevations indicated and according to AISC 303 and AISC 360.

B. Maintain erection tolerances of structural steel within AISC 303, "Code of Standard Practice for Steel Buildings and Bridges."

3.3 FIELD CONNECTIONS

A. High-Strength Bolts: Install high-strength bolts according to RCSC's "Specification for Structural Joints Using ASTM A 325 or A 490 Bolts" for type of bolt and type of joint specified.

1. Joint Type: Pretensioned.

B. Weld Connections: Comply with AWS D1.1/D1.1M for tolerances, appearances, welding procedure specifications, weld quality, and methods used in correcting welding work.

1. Comply with AISC 303 and AISC 360 for bearing, alignment, adequacy of temporary connections, and removal of paint on surfaces adjacent to field welds.
2. Remove backing bars or runoff tabs, back gouge, and grind steel smooth.
3. Assemble and weld built-up sections by methods that maintain true alignment of axes without exceeding tolerances in AISC 303, "Code of Standard Practice for Steel Buildings and Bridges," for mill material.

3.4 FIELD QUALITY CONTROL

A. Special Inspections: Engage a qualified special inspector to perform the following special inspections:

1. Verify structural-steel materials and inspect steel frame joint details.

NOT FOR BID

2. Verify weld materials and inspect welds.
3. Verify connection materials and inspect high-strength bolted connections.

B. Testing Agency: Engage a qualified testing agency to perform tests and inspections.

C. Bolted Connections: Inspect and test bolted connections according to RCSC's "Specification for Structural Joints Using ASTM A 325 or A 490 Bolts."

D. Welded Connections: Visually inspect field welds according to AWS D1.1/D1.1M.

1. In addition to visual inspection, test and inspect field welds according to AWS D1.1/D1.1M and the following inspection procedures, at testing agency's option:

   a. Liquid Penetrant Inspection: ASTM E 165.
   b. Magnetic Particle Inspection: ASTM E 709; performed on root pass and on finished weld. Cracks or zones of incomplete fusion or penetration are not accepted.
   c. Ultrasonic Inspection: ASTM E 164.
   d. Radiographic Inspection: ASTM E 94.

END OF SECTION 051200

NOT FOR BID

(THIS PAGE INTENTIONALLY LEFT BLANK)

NOT FOR BID

NOT FOR BID

SECTION 055213 - PIPE AND TUBE RAILINGS

PART 1 - GENERAL

1.1 SUMMARY

A. Section Includes:

1. Steel pipe and tube railings

1.2 ACTION SUBMITTALS

A. Product Data: For the following:

1. Manufacturer's product lines of mechanically connected railings.
2. Railing brackets.

B. Shop Drawings: Include plans, elevations, sections, details, and attachments to other work.

C. Samples: For each type of exposed finish required.

D. Delegated-Design Submittal: For railings, including analysis data signed and sealed by the qualified professional engineer responsible for their preparation.

1.3 INFORMATIONAL SUBMITTALS

A. Product Test Reports: For pipe and tube railings, for tests performed by a qualified testing agency, according to ASTM E 894 and ASTM E 935.

PART 2 - PRODUCTS

2.1 PERFORMANCE REQUIREMENTS

A. Delegated Design: Engage a qualified professional engineer, as defined in Section 014000 "Quality Requirements," to design railings, including attachment to building construction.

B. Structural Performance: Railings, including attachment to building construction, shall withstand the effects of gravity loads and the following loads and stresses within limits and under conditions indicated:

1. Handrails and Top Rails of Guards:

a. Uniform load of 50 lbf/ ft. applied in any direction.
b. Concentrated load of 200 lbf applied in any direction.
c. Uniform and concentrated loads need not be assumed to act concurrently.

2. Infill of Guards:

a. Concentrated load of 50 lbf applied horizontally on an area of 1 sq. ft..
b. Infill load and other loads need not be assumed to act concurrently.

NOT FOR BID

2.2 METALS, GENERAL

A. Brackets, Flanges, and Anchors: Cast or formed metal of same type of material and finish as supported rails unless otherwise indicated.

1. Provide type of bracket with predrilled hole for exposed bolt anchorage and that provides 1-1/2-inch clearance from inside face of handrail to finished wall surface.

2.3 STEEL AND IRON

A. Tubing: ASTM A 847 (cold formed) or ASTM A 588, atmospheric corrosion resistant.

B. Plate, Shapes, and Bars: ASTM A 242 or ASTM A 606.

2.4 FASTENERS

A. General: Provide the following:

1. Bolted Connections: ASTM A 563, Grade C3 or Grade D.

B. Post-Installed Anchors: Torque-controlled expansion anchors capable of sustaining, without failure, a load equal to 6 times the load imposed when installed in unit masonry and 4 times the load imposed when installed in concrete, as determined by testing according to ASTM E 488/E 488M, conducted by a qualified independent testing agency.

2.5 MISCELLANEOUS MATERIALS

A. Welding Rods and Bare Electrodes: Select according to AWS specifications for metal alloy welded.

B. Etching Cleaner for Galvanized Metal: Complying with MPI#25.

NOT FOR BID

2.6 FABRICATION

A. Cut, drill, and punch metals cleanly and accurately. Remove burrs and ease edges to a radius of approximately 1/32 inch unless otherwise indicated. Remove sharp or rough areas on exposed surfaces.

B. Form work true to line and level with accurate angles and surfaces.

C. Welded Connections: Cope components at connections to provide close fit, or use fittings designed for this purpose. Weld all around at connections, including at fittings.

1. Use materials and methods that minimize distortion and develop strength and corrosion resistance of base metals.
2. Obtain fusion without undercut or overlap.
3. Remove flux immediately.
4. At exposed connections, finish exposed surfaces smooth and blended so no roughness shows after finishing and welded surface matches contours of adjoining surfaces.

D. Welded Connections for Aluminum Pipe: Fabricate railings to interconnect members with concealed internal welds that eliminate surface grinding, using manufacturer's standard system of sleeve and socket fittings.

E. Nonwelded Connections: Connect members with concealed mechanical fasteners and fittings. Fabricate members and fittings to produce flush, smooth, rigid, hairline joints.

F. Form changes in direction by bending.

G. For changes in direction made by bending, use jigs to produce uniform curvature for each repetitive configuration required. Maintain cross section of member throughout entire bend without buckling, twisting, cracking, or otherwise deforming exposed surfaces of components.

H. Close exposed ends of railing members with prefabricated end fittings.

I. Provide wall returns at ends of wall-mounted handrails unless otherwise indicated.

J. Brackets, Flanges, Fittings, and Anchors: Provide wall brackets, flanges, miscellaneous fittings, and anchors to interconnect railing members to other work unless otherwise indicated.

1. At brackets and fittings fastened to plaster or gypsum board partitions, provide crush-resistant fillers or other means to transfer loads through wall finishes to structural supports and prevent bracket or fitting rotation and crushing of substrate.

PART 3 - EXECUTION

3.1 INSTALLATION, GENERAL

A. Set railings accurately in location, alignment, and elevation, measured from established lines and levels and free of rack.

1. Do not weld, cut, or abrade surfaces of railing components that are coated or finished after fabrication and that are intended for field connection by mechanical or other means without further cutting or fitting.
2. Set posts plumb within a tolerance of 1/16 inch in 3 feet.
3. Align rails so variations from level for horizontal members and variations from parallel with rake of steps and ramps for sloping members do not exceed 1/4 inch in 12 feet.

3.2 ATTACHING RAILINGS

A. Locate brackets as indicated, if not indicated, at spacing required to support structural loads.

B. Secure brackets and railings as shown on the contract plans or approved Shop Drawings.

END OF SECTION 055213

NOT FOR BID

NOT FOR BID

SECTION 061063 - EXTERIOR ROUGH CARPENTRY

PART 1 - GENERAL

1.1 SUMMARY

A. Section Includes:

1. Wood fences.
2. Wood structures.

B. Related Requirements:

1.2 ACTION SUBMITTALS

A. Product Data: For preservative-treated wood products.

1.3 INFORMATIONAL SUBMITTALS

A. Material Certificates:

1. For preservative-treated wood products. Indicate type of preservative used and net amount of preservative retained.

B. Evaluation Reports: For preservative-treated wood products, from ICC-ES.

PART 2 - PRODUCTS

2.1 LUMBER, GENERAL

A. Comply with DOC PS 20 and with grading rules of lumber grading agencies certified by ALSC's Board of Review as applicable. If no grading agency is indicated, comply with the applicable rules of any rules-writing agency certified by ALSC's Board of Review.

1. Factory mark each item with grade stamp of grading agency.
2. For items that are exposed to view in the completed Work, mark grade stamp on end or back of each piece.
3. Provide dressed lumber, S4S, unless otherwise indicated.

B. Maximum Moisture Content:

1. Boards: 19 percent.

2. Dimension Lumber: 19 percent.
3. Timber. 19 percent.

2.2 LUMBER

A. Dimension Lumber: No. 2 grade and the following species:

1. Douglas fir-larch, Douglas fir-larch (North), or Douglas fir-south; NLGA, WCLIB, or WWPA.
2. Mixed southern pine; SPIB.

B. Boards:

1. Mixed southern pine; No. 2 grade; SPIB.
2. Spruce-pine-fir (South) or spruce-pine-fir; No. 2 Common grade; NeLMA, NLGA, WCLIB, or WWPA.

NOT FOR BID

2.3 POSTS

A. Dimension Lumber Posts: No. 2 grade and any of the following species:

1. Mixed southern pine; SPIB.
2. Northern species; NLGA.
3. Eastern softwoods; NeLMA.
4. Southern pine; No. 2, SPIB.

2.4 PRESERVATIVE TREATMENT

A. Pressure treat boards and dimension lumber with waterborne preservative according to AWPA U1; Use Category UC3b for exterior construction not in contact with the ground, and Use Category UC4a for items in contact with the ground.

B. Pressure treat timber with waterborne preservative according to AWPA U1; Use Category UC4a.

C. Preservative Chemicals: Acceptable to authorities having jurisdiction.

1. Do not use chemicals containing arsenic or chromium except for timber posts and poles not exposed to direct human contact.

D. After treatment, redry dimension lumber to 19 percent maximum moisture content.

E. Mark treated wood with treatment quality mark of an inspection agency approved by ALSC's Board of Review.

1. For items indicated to receive a stained or natural finish, mark each piece on surface that will not be exposed.

F. Application: Treat all wood unless otherwise indicated.

NOT FOR BID

2.5 FASTENERS

A. General: Provide fasteners of size and type indicated, acceptable to authorities having jurisdiction, and that comply with requirements specified in this article for material and manufacture. Provide nails or screws, in sufficient length, to penetrate not less than 1-1/2 inches into wood substrate.

1. Use stainless steel unless otherwise indicated.

B. Postinstalled Anchors: Stainless-steel, chemical anchors with capability to sustain, without failure, a load equal to 6 times the load imposed when installed in unit masonry assemblies and equal to 4 times the load imposed when installed in concrete as determined by testing according to ASTM E 488, conducted by a qualified independent testing and inspecting agency.

1. Stainless-steel bolts and nuts complying with ASTM F 593 and ASTM F 594, Alloy Group 1 or 2.

2.6 METAL ACCESSORIES

A. Manufacturers: Subject to compliance with requirements, provide products by one of the following:

1. KC Metals Products, Inc.
2. Simpson Strong-Tie Co., Inc.
3. USP Structural Connectors.

B. Galvanized-Steel Sheet: Hot-dip, zinc-coated steel sheet complying with ASTM A 653/A 653M, G90 coating designation.

C. Stainless-Steel Sheet: ASTM A 666, Type 316.

PART 3 - EXECUTION

3.1 INSTALLATION, GENERAL

A. Set work to required levels and lines, with members plumb, true to line, cut, and fitted. Fit work to other construction; scribe and cope as needed for accurate fit.

B. Framing Standard: Comply with AF&PA WCD1 unless otherwise indicated.

C. Install metal framing anchors to comply with manufacturer's written instructions.

D. Do not splice structural members between supports unless otherwise indicated.

E. Securely attach exterior rough carpentry work to substrate by anchoring and fastening as indicated, complying with the following:

1. ICC-ES AC70 for power-driven fasteners.
2. "Fastening Schedule" in ICC's International Building Code.

END OF SECTION 061063

NOT FOR BID

SECTION 132450 - HELICAL SCREW FOUNDATIONS

GENERAL

1.1 SUMMARY

A. Section Includes: Helical Screw Foundations (HSF) for Structural Support.

1.2 REFERENCES

A. General: Standards listed by reference, including revisions by issuing authority, form a part of this specification section to the extent indicated. Standards listed are identified by issuing authority, authority abbreviation, designation number, title or other designation established by issuing authority. Standards subsequently referenced herein are referred to by issuing authority abbreviation and standard designation.

B. ASTM International:
1. ASTM A29/A29M Standard Specification for Steel Bars, Carbon and Alloy, Hot-Wrought and Cold-Finished, General Requirements for.
2. ASTM A36/A36M Standard Specification for Carbon Structural Steel.
3. ASTM A53 Standard Specification for Pipe, Steel, Black and Hot-Dipped, Zinc-Coated, Welded and Seamless.
4. ASTM A153 Standard Specification for Zinc Coating (Hot-Dip) on Iron and Steel Hardware.
5. ASTM A193/A193M Standard Specification for Alloy-Steel and Stainless Steel Bolting Materials for High-Temperature Service.
6. ASTM A252 Standard Specification for Welded and Seamless Steel Pipe Piles.
7. ASTM A320/A320M Standard Specification for Alloy/Steel Bolting Materials for Low-Temperature Service.
8. ASTM A500 Standard Specification for Cold-Formed Welded and Seamless Carbon Steel Structural Tubing in Rounds and Shapes.
9. ASTM A572 Standard Specification for High-Strength Low-Alloy Columbium-Vanadium Structural Steel.
10. ASTM A618 Standard Specification for Hot-Formed Welded and Seamless High-Strength Low-Alloy Structural Tubing.
11. ASTM A656 Standard Specification for Hot-Rolled Structural Steel, High-Strength Low-Alloy Plate with Improved Formability.
12. ASTM A775 Standard Specification for Epoxy-Coated Reinforcing Steel Bars.
13. ASTM A1018 Standard Specification for Steel, Sheet and Strip, Heavy Thickness Coils, Hot Rolled, Carbon, Structural, High-Strength Low-Alloy, Columbium or Vanadium, and High-Strength Low-Alloy with Improved Formability.
14. ASTM D1143 Standard Test Method for Piles Under Static Axial Compressive Load.
15. ASTM D3689 Standard Test Method for Individual Piles Under Static Axial Tensile Load.

C. Society of Automotive Engineers (SAE):

NOT FOR BID

1. SAE J429 Mechanical and Material Requirements for Externally Threaded Fasteners.

D. International Standardization Organization (ISO)
1. ISO 9001 Compliance

NOT FOR BID

1.3 DEFINITIONS

A. Special definitions that apply to this section include:
1. Power Installed Helical Screw Foundation: Consists of steel screw anchors with one or more helix-shaped steel plates attached to a central steel square solid shaft. Fabricated from high-strength square solid shafts to resist bending moments and installing-torque rating. Referred to hereinafter using the abbreviation "HSF."

1.4 SYSTEM DESCRIPTION

A. Design Requirements:
1. Design HSF to meet the specified loads and acceptance criteria as shown on the drawings.
2. Design power installed HSF application by Professional Structural Engineer experienced in design of this work and licensed in the State of Delaware. Design shall be in accordance with the manufacturer's requirements as noted:
   a. Allowable Working Load in Compression (KIPS).
   b. Allowable Working Load in Tension (KIPS): Not Applicable.
   c. Ultimate Structural Capacity in Compression (KIPS).
   d. Ultimate Structural Capacity in Tension (KIPS): Not Applicable.
   e. Lateral Load and Bending (KIPS.
   f. Critical Buckling Load (KIPS).

1.5 SUBMITTALS

A. General: Submit listed submittals in accordance with Conditions of the Contract and Division 1 Submittal Procedures Section.

B. Product Data: Submit manufacturer's product data and installation instructions.

C. Shop Drawings: Provide drawings indicating profiles and product components and accessories and indicate the following:
1. HSF number, location and pattern by assigned identification number.
2. HSF design load.
3. Type and size of central steel shaft.
4. Helix configuration (number and diameter of helix plates).
5. Minimum effective installation torque.
6. Minimum overall length.
7. Inclination of HSF.
8. Cutoff elevation.
9. HSF attachment to structure relative to grade beam, column pad, pile cap, etc.

D. Quality Assurance/Control Submittals: Submit the following:
   1. Design Data: Engineer's design data and calculations.
   2. Test Reports: Certified material test reports showing compliance with specified characteristics and physical properties.
   3. Certificates: Submit the following:
      a. Manufacturer's certificate that products meet or exceed specified requirements.
      b. Manufacturer's Certificate of Registration for ISO 9001 compliance.
      c. Mill test reports as requested.

E. In Place Testing:
   1. Test Reports: Certified test reports showing compliance with ultimate and allowable loading requirements in accordance with ASTM D 1143. Test reports shall be sealed by an Engineer licensed in the state of Delaware.

F. Closeout Submittals: Submit the following:
   1. Installer's Field Reports: Accurately record the following: Type, size and actual locations of HSF, torque installation records on all HSF and torque monitoring calibration data.

NOT FOR BID

1.6 QUALITY ASSURANCE

A. Installer Qualifications: Utilize an installer having demonstrated experience on projects of similar size and complexity, and who is authorized and trained by the manufacturer to install its products.

B. Manufacturer Qualifications: Utilize products from a manufacturer maintaining a quality system in compliance with ISO 9001 Requirements.

C. Certifications: Certified mill test reports for the central steel shaft, as the material is delivered, for record purposes. Provide ultimate strength, yield strength, percent elongation and chemistry composition.

D. Preinstallation Meetings: A meeting shall be held on site with the installer to discuss installation procedures with the owner at least one week before installation of the anchors.

1.7 DELIVERY, STORAGE & HANDLING

A. General: Comply with Division 1 Product Requirement Section.

B. Comply with manufacturer's ordering instructions and lead time requirements to avoid construction delays.

C. Delivery: Deliver materials in manufacturer's original, unopened, undamaged containers with identification labels intact.

D. Storage and Protection: Store materials protected from exposure to harmful environmental conditions and at temperature and humidity conditions recommended by the manufacturer.

PRODUCTS

1.8 HELICAL SCREW FOUNDATIONS

A. Possible Manufacturers:

1. AB Chance Company, 210 N. Allen St., Centralia, MO 65240; Telephone: (573) 682-8414; Fax: (573) 682-8660; E-mail: hpscontact@hps.hubbell.com; Website: www.abchance.com.
2. Magnum Piering, Inc., 6082 Schumacher Park Drive, West Chester, OH 45069; Telephone: (513) 777-1630; Fax: (513) 777-5374; Website: www.magnumpiering.com.
3. Piertech, 17813 Edison Ave., Suite 100, Chesterfield, MO 63005; Telephone: 636) 536-5007: Website: www.piertech.com

1.9 MATERIALS

A. Central Steel Shaft:
1. Consists of lead sections, helical extensions and plain extensions.
2. Lead sections shall consist of Hot rolled Round-Cornered-Square (RCS) solid steel bars meeting dimensional and workmanship requirements of ASTM A29. The shaft size shall be specified to provide adequate compressive and/or tensile strength for the required loading. One end of the Lead Section shall have a 45-degree bevel to aid in starting the anchor. The other end shall have one or more holes, depending upon the shaft size, to receive attachment bolt(s).
3. Extensions, helical or plain, shall be Hot rolled Round-Cornered-Square (RCS) solid steel bars meeting dimensional and workmanship requirements of ASTM A29. The shaft may be specified in sizes 1 ½ to 2 inches square. Each end of the Extension section shall have bolt holes set at 90 degrees to each other, for no less than two (2) bolts to attachment to the Lead Section, other Extension Sections, or bolted termination device.

B. Helix Bearing Plate:
1. Hot rolled carbon steel sheet, strip or plate formed on matching metal dies to true helical shape and uniform pitch. Bearing plate material shall conform to ASTM A572, ASTM A1018, or ASTM A656. Bearing Plates shall have a specified thickness of either 3/8 or 1/2 inch and a 3 inch pitch. Bearing Plates diameters may be specified in any combination of equal or increasing diameters from 6 inches to 16 inches, in 2-inch increments.

C. Bolts:
1. The size and type of bolts used to connect the central steel shaft sections together shall conform to the following ASTM specifications.
2. 3/4 inch diameter bolt per ASTM A320 Grade L7.
7/8 inch diameter bolt per ASTM A193 Grade B7.
1 1/8 inch diameter bolt per ASTM A193 Grade B7.
1 1/4 inch diameter bolt per ASTM A193 Grade B7.

NOT FOR BID

3/4 inch diameter bolts per SAE J429 Grade 5.

D. Couplings:
1. Formed as integral part of the plain and helical extension material.

E. Plates, Shapes or Pier Caps: For structural steel plates and shapes for HSF top attachments, conform to ASTM A36 or ASTM A572, Grade 50.

F. Corrosion Protection:
1. Galvanization: All material shall be hot dipped galvanized in accordance with ASTM A153 after fabrication. If the final extension must be cut to the desired final elevation, any exposed steel shall be coated with a field-applied cold galvanizing compound as recommended by the engineer.

G. Weldments:
1. All welded connections shall conform to the requirements of the American Welding Society, "Structural Welding Code, AWS D1.1" and applicable revisions.

NOT FOR BID

EXECUTION

1.10 MANUFACTURER'S INSTRUCTIONS

A. Comply with the instructions and recommendations of the power installed HSF manufacturer.

1.11 EXAMINATION

A. Site Verification of Conditions:
1. Verify that site conditions are acceptable for installation of power installed helical screw foundations.

a. Verify that all work of other trades is completed to the point where HSFs may commence without restriction.

b. Verify that all HSFs may be installed in accordance with all pertinent codes and regulations regarding such items as underground obstructions, right-of-way limitations, utilities, etc.

2. Do not proceed with installation of power installed helical screw foundations until unacceptable conditions are corrected.

1.12 INSTALLATION

A. General:

1. The HSF installation technique shall be consistent with the geotechnical, logistical, environmental and load carrying conditions of the project.

2. Installation equipment shall be rotary type, hydraulic power driven torque motor with clockwise and counterclockwise rotation capabilities.

   a. Utilize a torque motor capable of continuous adjustment to number of revolutions per minute (RPM) during installation and with a torque capacity 15% greater than the torsional strength rating of the central steel shaft to be installed. Do not use percussion drilling equipment.

   b. Utilize equipment capable of applying adequate downward pressure and torque simultaneously to suit project soil conditions and load requirements, and capable of continuous position adjustment to maintain proper HSF alignment.

3. A calibrated torque indicator shall be used during HSF installation. The torque indicator may be an integral part of the installation equipment or externally mounted in-line with the installation tooling.

B. Central Steel Shaft Installation Procedure:

1. Engage and advance HSF into soil in a smooth, continuous manner at a rate of rotation of 5 - 20 RPM. Provide extension sections to obtain the required minimum overall length and installation torque as shown on the working drawings. Connect sections together using coupling bolt and nut tightened to torque of 40 ft-lb (54 N × m).

2. Apply sufficient down pressure to uniformly advance the HSF sections approximately 3 inches (76 mm) per revolution. Adjust rate of rotation and magnitude of down pressure for different soil conditions and depths.

C. Termination Criteria:

1. Satisfy the minimum installation torque and minimum overall length criteria as shown on the working drawings prior to terminating the HSF.

2. The torque as measured during the installation shall not exceed the torsional strength rating of the central steel shaft.

3. If the torsional strength rating of the central steel shaft and/or installation equipment has been reached prior to achieving the minimum overall length required, the installer shall have the following options:

   a. Terminate the installation at the depth obtained subject to the review and acceptance of the Owner, or:

   b. Remove the existing HSF and install a new one with fewer and/or smaller diameter helix plates. The new helix configuration shall be subject to

NOT FOR BID

review and acceptance of the Owner. If reinstalling in the same location, the topmost helix of the new HSF shall be terminated at least 3 feet (1 m) beyond the terminating depth of the original HSF.

4. If the minimum installation torque as shown on the working drawings is not achieved at the minimum overall length, and there is no maximum length constraint, the Contractor shall have the following options:

   a. Install the HSF deeper using additional extension sections.

   b. Remove the existing HSF and install a new one with additional and/or larger diameter helix plates. The new helix configuration shall be subject to review and acceptance of the Owner. If reinstalling in the same location, the topmost helix of the new HSF shall be terminated at least 3 feet (1 m) beyond the terminating depth of the original HSF.

   c. Derate the load capacity of the HSF and install additional pile(s). The derated capacity and additional pile location shall be subject to the review and acceptance by the Owner.

5. If the HSF is refused or deflected by a subsurface obstruction, terminate the installation and remove the pile. Remove the obstruction, if feasible, and reinstall the HSF. If it is not feasible to remove the obstruction, install the HSF at an adjacent location, subject to review and acceptance by the Owner.

6. If the torsional strength rating of the central steel shaft and/or installation equipment has been reached prior to proper positioning of the last plain extension section relative to the final elevation, the Contractor may remove the last plain extension and replace it with a shorter length extension. If it is not feasible to remove the last plain extension, the Contractor may cut the extension shaft to the correct elevation. Do not reverse (back-out) the helical screw foundation to facilitate extension removal.

7. The average torque for the last 3 feet (1 m) of penetration shall be used as the basis of comparison with the minimum installation torque as shown on the working drawings. The average torque shall be defined as the average of the last 3 readings recorded at 1 foot (0.3 m) intervals.

D. Site Tolerances: Install HSF to the following allowable variation:

1. Centerline of piling shall not be more than 3 inches (76 mm) from indicated plan location.

2. Pile plumbness shall be within 2 degrees of design alignment.

3. Top elevation of pile shall be within +1 inch (25 mm) to -2 inches (50 mm) of the design vertical elevation.

NOT FOR BID

1.13 FIELD QUALITY CONTROL

A. Site Tests:

1. Load Test Procedures: The test shall be conducted in conformance with the requirements of ASTM D1143-07 "Standard Test Method for Piles under Static Axial Compressive Load" unless the Engineer of Record on the project modifies these requirements.

a. Determine the depth to the target stratum of soil from the geotechnical site investigation report that includes boring logs. Use this data to select a pile design capacity, ultimate capacity and estimate the installation torque at the target stratum and depth.

b. Set the spacing and install the four reaction piles at the test site. The recommended spacing between the test pile and the reaction piles is 5D where D = diameter of the largest helical plate.

c. Install a test helical product pile at the centroid of the reaction piles to the target depth and torque resistance.

d. Mount the two anchor beams on the four reaction piles and the reaction beam between the anchor beams.

e. Install a load cell, hydraulic load jack, actuator and pressure gauge. The center hole load jack will be mounted below the reaction beam for a bearing (compression) test.

f. Set the deflection measuring devices. Deflection measuring devices can include dial gauges (accuracy to .001") mounted on a reference beam, a transit level surveying system, or other types of devices as may be specified by the Engineer.

g. Apply a small seating/alignment load, usually 5% of the ultimate load. Hold the seating load constant for 10 minutes or until no further displacement is measured.

h. Set the deflection measuring device(s) to zero.

i. Apply the first load increment as 20% of the ultimate load and hold that load constant. Monitor the incremental deflection (Δd) at intervals of 30 sec., 1, 5, 10, and 20 minutes (per the "quick" test procedure of ASTM). The monitoring can be stopped after 10 or 20 minutes as long as the rate of deflection is less than 0.002" per minute. If Δd (at 20 minutes) < 0.330", proceed to the next 20% load increment and repeat Step 9 until the ultimate load is reached or failure occurs by excessive deflection (vertical deformation).

NOT FOR BID

j. Once the maximum loading condition is reached, unloading commences with at least two unloading increments: 50% of maximum load and 0% of maximum load.

k. A failure criterion is often established by the Project Engineer and will reflect project specific conditions. A plot of load versus pile deflection (d) is made to determine the ultimate and working load capacity of the pile system. A frequently used failure criteria is d < 1.0" to define the ultimate acceptable load and a permanent deflection (after unloading) < 0.5".

2. Acceptance Criteria: It is recommended that any field load test for bearing or tension be conducted under the supervision of a Registered Professional Engineer. The Engineer will specify the test and measurement procedure, load increments, time intervals, and acceptable ultimate deflection consistent with specific project and load conditions. If the design ultimate load and test ultimate load results are close, the Engineer may choose to adjust the pile spacing, to increase the depth of installation and/or modify the helical plate configuration in order to achieve a minimum Factor of Safety of 2.0 for bearing piles.

B. Site Test Records: Provide the Owner copies of field test reports within 24 hours after completion of the load tests. Include, at a minimum, the following information:

1. Name of project and Contractor.

2. Name of Contractor's supervisor during installation.

3. Name of third party test agency, if required.

4. Date, time and duration of test.

5. Location of HSF by assigned identification number.

6. Type of test (i.e., tension or compression).

7. Description of calibrated testing equipment and test setup.

8. Actual HSF type and configuration - including lead section, number and type of extension sections (manufacturer's SKU numbers).

9. Steps and duration of each load increment.

10. Cumulative pile-head movement at each load step.

11. Comments pertaining to test procedure, equipment adjustments or other relevant information.

12. Signed by third party test agency representative, registered professional engineer or as required by local jurisdiction.

NOT FOR BID

C. Installation Records: Provide the Owner copies of HSF installation records within 24 hours after each installation is completed. Include, at a minimum, the following information.

1. Name of project and Contractor.
2. Name of Contractor's supervisor during installation.
3. Date and time of installation.
4. Name and model of installation equipment.
5. Type of torque indicator used.
6. Location of HSF by assigned identification number.
7. Actual HSF type and configuration - including lead section (number and size of helix plates), number and type of extension sections (manufacturer's SKU numbers).
8. HSF installation duration and observations.
9. Total length of installed HSF.
10. Cutoff elevation.
11. Inclination of HSF.
12. Installation torque at 1-foot (0.3 m) intervals for the final 10 feet (3.1 m).
13. Comments pertaining to interruptions, obstructions or other relevant information.
14. Rated load capacities.

NOT FOR BID

1.14 PROTECTION

A. Protect installed work from damage due to subsequent construction activity on the site.

END OF SECTION 02450

Designation: D 1143/D 1143M – 07

Standard Test Methods for Deep Foundations Under Static Axial Compressive Load[1]

This standard is issued under the fixed designation D 1143/D 1143M; the number immediately following the designation indicates the year of original adoption or, in the case of revision, the year of last revision. A number in parentheses indicates the year of last reapproval. A superscript epsilon (ϵ) indicates an editorial change since the last revision or reapproval.

This standard has been approved for use by agencies of the Department of Defense.

NOT FOR BID

1. Scope*

1.1 The test methods described in this standard measure the axial deflection of a vertical or inclined deep foundation when loaded in static axial compression. These methods apply to all deep foundations, referred to herein as *piles,* that function in a manner similar to driven piles or castinplace piles, regardless of their method of installation, and may be used for testing single piles or pile groups. The test results may not represent the long-term performance of a deep foundation.

1.2 This standard provides minimum requirements for testing deep foundations under static axial compressive load. Plans, specifications, and/or provisions prepared by a qualified engineer may provide additional requirements and procedures as needed to satisfy the objectives of a particular test program. The engineer in responsible charge of the foundation design, referred to herein as the Engineer, shall approve any deviations, deletions, or additions to the requirements of this standard.

1.3 This standard allows the following test procedures:

Procedure A	Quick Test
Procedure B	Maintained Test (optional)
Procedure C	Loading in Excess of Maintained Test (optional)
Procedure D	Constant Time Interval Test (optional)
Procedure E	Constant Rate of Penetration Test (optional)
Procedure F	Constant Movement Increment Test (optional)
Procedure G	Cyclic Loading Test (optional)

1.4 Apparatus and procedures herein designated "optional" may produce different test results and may be used only when approved by the Engineer. The word "shall" indicates a mandatory provision, and the word "should" indicates a recommended or advisory provision. Imperative sentences indicate mandatory provisions.

1.5 A qualified geotechnical engineer should interpret the test results obtained from the procedures of this standard so as to predict the actual performance and adequacy of piles used in the constructed foundation. See Appendix X1 for comments regarding some of the factors influencing the interpretation of test results.

1.6 A qualified engineer shall design and approve all loading apparatus, loaded members, support frames, and test procedures. The text of this standard references notes and footnotes which provide explanatory material. These notes and footnotes (excluding those in tables and figures) shall not be considered as requirements of the standard. This standard also includes illustrations and appendices intended only for explanatory or advisory use.

1.7 The values stated in either SI units or inch-pound units are to be regarded separately as standard. The values stated in each system may not be exact equivalents; therefore, each system shall be used independently of the other. Combining values from the two systems may result in non-conformance with the standard.

1.8 The gravitational system of inch-pound units is used when dealing with inch-pound units. In this system, the pound (lbf) represents a unit of force (weight), while the unit for mass is slugs. The rationalized slug unit is not given, unless dynamic (F=ma) calculations are involved.

1.9 All observed and calculated values shall conform to the guidelines for significant digits and rounding established in Practice D 6026.

1.10 The method used to specify how data are collected, calculated, or recorded in this standard is not directly related to the accuracy to which the data can be applied in design or other uses, or both. How one applies the results obtained using this standard is beyond its scope.

1.11 *This standard does not purport to address all of the safety concerns, if any, associated with its use. It is the responsibility of the user of this standard to establish appropriate safety and health practices and determine the applicability of regulatory limitations prior to use.*

2. Referenced Documents

2.1 *ASTM Standards:* [2]

D 653 Terminology Relating to Soil, Rock, and Contained Fluids

D 3740 Practice for Minimum Requirements for Agencies

[1] This test method is under the jurisdiction of ASTM Committee D18 on Soil and Rock and is the direct responsibility of Subcommittee D18.11 on Deep Foundations.

Current edition approved Feb. 1, 2007. Published April 2007. Originally approved in 1950. Discontinued in August 1995 and reinstated in 2007 as D 1143–07. Last previous edition approved in 1994 as D 1143 – 81(1994) ϵ1 .

[2] For referenced ASTM standards, visit the ASTM website, www.astm.org, or contact ASTM Customer Service at service@astm.org. For *Annual Book of ASTM Standards* volume information, refer to the standard's Document Summary page on the ASTM website.

***A Summary of Changes section appears at the end of this standard.**

Copyright © ASTM International, 100 Barr Harbor Drive, PO Box C700, West Conshohocken, PA 19428-2959, United States.

Engaged in the Testing and/or Inspection of Soil and Rock as Used in Engineering Design and Construction

D 5882 Test Method for Low Strain Integrity Testing of Piles

D 6026 Practice for Using Significant Digits in Geotechnical Data

D 6760 Test Method for Integrity Testing of Concrete Deep Foundations by Ultrasonic Crosshole Testing

2.2 *American National Standards:*[3]

ASME B30.1 Jacks

ASME B40.100 Pressure Gages and Gauge Attachments

ASME B89.1.10.M Dial Indicators (For Linear Measurements)

3. Terminology

3.1 For common definitions of terms used in this standard see Terminology D 653 Terminology Relating to Soil, Rock, and Contained Fluids.

3.2 *Definitions of Terms Specific to this Standard:*

3.2.1 *cast in-place pile*, *n*—a deep foundation unit made of cement grout or concrete and constructed in its final location, for example, drilled shafts, bored piles, caissons, auger cast piles, pressure-injected footings, etc

3.2.2 *deep foundation*, *n*— a relatively slender structural element that transmits some or all of the load it supports to soil or rock well below the ground surface, such as a steel pipe pile or concrete drilled shaft

3.2.3 *driven pile*, *n*—a deep foundation unit made of preformed material with a predetermined shape and size and typically installed by impact hammering, vibrating, or pushing.

3.2.4 *failure load*, *n*—for the purpose of terminating an axial compressive load test, the test load at which rapid continuing, progressive movement occurs, or at which the total axial movement exceeds 15 % of the pile diameter or width, or as specified by the engineer.

3.2.5 *telltale rod*, *n*—an unstrained metal rod extended through the test pile from a specific point to be used as a reference from which to measure the change in the length of the loaded pile.

3.2.6 *wireline*, *n*—a steel wire mounted with a constant tension force between two supports and used as a reference line to read a scale indicating movement of the test pile.

4. Significance and Use

4.1 Field tests provide the most reliable relationship between the axial load applied to a deep foundation and the resulting axial movement. Test results may also provide information used to assess the distribution of side shear resistance along the pile shaft, the amount of end bearing developed at the pile toe, and the long-term load-deflection behavior. A foundation designer may evaluate the test results to determine if, after applying an appropriate factor of safety, the pile or pile group has an ultimate static capacity and a deflection at service load satisfactory to support a specific foundation. When performed as part of a multiple-pile test program, the designer may also use the results to assess the viability of different piling types and the variability of the test site.

4.2 If feasible, without exceeding the safe structural load on the pile(s) or pile cap, the maximum load applied should reach a failure load from which the Engineer may determine the ultimate axial static compressive load capacity of the pile(s). Tests that achieve a failure load may help the designer improve the efficiency of the foundation by reducing the piling length, quantity, or size.

4.3 If deemed impractical to apply axial test loads to an inclined pile, the Engineer may elect to use axial test results from a nearby vertical pile to evaluate the axial capacity of the inclined pile.

NOTE 1—The quality of the result produced by this test method is dependent on the competence of the personnel performing it, and the suitability of the equipment and facilities used. Agencies that meet the criteria of Practice D 3740 are generally considered capable of competent and objective testing/sampling/ inspection/etc. Users of this test method are cautioned that compliance with Practice D 3740 does not in itself assure reliable results. Reliable results depend on many factors; Practice D 3740 provides a means of evaluating some of those factors.

5. Test Foundation Preparation

5.1 Excavate or add fill to the ground surface around the test pile or pile group to the final design elevation unless otherwise approved by the Engineer.

5.2 Cut off or build up the test pile as necessary to permit construction of the load-application apparatus, placement of the necessary testing and instrumentation equipment, and observation of the instrumentation. Remove any damaged or unsound material from the pile top and prepare the surface so that it is perpendicular to the pile axis with minimal irregularity to provide a good bearing surface for a test plate.

5.3 For tests of single piles, install a solid steel test plate at least 25 mm (1 in) thick perpendicular to the long axis of the test pile that covers the complete pile top area. The test plate shall span across and between any unbraced flanges on the test pile.

5.4 For tests on pile groups, cap the pile group with steel-reinforced concrete or a steel load frame designed for the anticipated loads. Provide a clear space beneath the pile cap as specified by the Engineer to eliminate any bearing on the underlying ground surface. For each loading point on the pile cap, provide a solid steel test plate oriented perpendicular to the axis of the pile group with a minimum thickness of 25 mm (1 in), as needed to safely apply load to the pile cap. Center a single bearing plate on the centroid of the pile group. Locate multiple bearing plates symmetrically about the centroid of the pile group. Boxes and beams may bear directly on the pile cap when designed to bear uniformly along their contact surface with the cap.

5.5 To minimize stress concentrations due to minor irregularities of the pile top surface, set test plates bearing on the top of precast or cast-in-place concrete piles in a thin layer of quick-setting, non-shrink grout, less than 6 m (0.25 in) thick and having a compressive strength greater than the test pile at the time of the test. Set test plates, boxes, and beams designed

[3] Available from American Society of Mechanical Engineers (ASME), ASME International Headquarters, Three Park Ave., New York, NY 10016-5990, http://www.asme.org.

NOT FOR BID

to bear on a concrete pile cap in a thin layer of quick-setting, non-shrink grout, less than 6 mm (0.25 in) thick and having a compressive strength greater than the pile cap at the time of the test. For tests on steel piles, or a steel load frame, weld the test plate to the pile or load frame. For tests on individual timber piles, set the test plate directly on the cleanly cut top of the pile, or in grout as described for concrete piles.

NOTE 2—Deep foundations sometimes include hidden defects that may go unnoticed prior to the static testing. Low strain integrity tests as described in D 5882 and ultrasonic crosshole integrity tests as described in D 6760 may provide a useful pre-test evaluation of the test foundation.

6. Apparatus for Applying and Measuring Loads

6.1 *General*:

6.1.1 The apparatus for applying compressive loads to a test pile or pile group shall conform to one of the methods described in 6.3–6.6 Unless otherwise specified by the Engineer, the apparatus for applying and measuring loads described in this section shall be capable of safely applying at least 120 % of the maximum anticipated test load. Use the method described in 6.3 to apply axial loads to either vertical or inclined piles or pile groups. Use the methods described in 6.4-6.6 to apply only vertical loads.

6.1.2 Align the test load apparatus with the longitudinal axis of the pile or pile group to minimize eccentric loading. When necessary to prevent lateral deflection and buckling along the unsupported pile length, provide lateral braces that do not influence the axial movement of the pile, or pile cap.

6.1.3 Each jack shall include a hemispherical bearing or similar device to minimize lateral loading of the pile or group. The hemispherical bearing should include a locking mechanism for safe handling and setup. Center bearing plates, hydraulic jack(s), load cell(s), and hemispherical bearings on the test beam(s), test pile, or test pile cap.

6.1.4 Provide bearing stiffeners as needed between the flanges of test and reaction beams. Provide steel bearing plates as needed to spread the load from the outer perimeter of the jack(s), or the bearing surface of beams or boxes, to bear on the surface of the test pile or pile cap. Also provide steel bearing plates to spread the load between the jack(s), load cells, and hemispherical bearings, and to spread the load to the test beam(s), test pile, or pile cap. Bearing plates shall extend the full flange width of steel beams and the complete top area of piles, or as specified by the Engineer, so as to provide full bearing and distribution of the load.

6.1.5 Unless otherwise specified, provide steel bearing plates that have a total thickness adequate to spread the bearing load between the outer perimeters of loaded surfaces at a maximum angle of 45 ° to the loaded axis. For center hole jacks and center hole load cells, also provide steel plates adequate to spread the load from their inner diameter to the their central axis at a maximum angle of 45 ° , or per manufacturer recommendations. Bearing plates shall extend the full width of the test beam(s) or any steel reaction members so as to provide full bearing and distribution of the load.

6.1.6 A qualified engineer shall design and approve all loading apparatus, loaded members, support frames, and loading procedures. The test beam(s), load platforms, and support structures shall have sufficient size, strength, and stiffness to prevent excessive deflection and instability up to the maximum anticipated test load.

NOTE 3—Rotations and lateral displacements of the test pile or pile cap may occur during loading, especially for piles extending above the soil surface or through weak soils. Design and construct the support reactions to resist any undesirable rotations or lateral displacements

6.2 *Hydraulic Jacks, Gages, Transducers, and Load Cells*:

6.2.1 The hydraulic jack(s) and their operation shall conform to ASME B30.1 Jacks and shall have a nominal load capacity exceeding the maximum anticipated jack load by at least 20 %. The jack, pump, and any hoses, pipes, fittings, gages, or transducers used to pressurize it shall be rated to a safe pressure corresponding to the nominal jack capacity.

6.2.2 The hydraulic jack ram(s) shall have a travel greater than the sum of the anticipated maximum axial movement of the pile plus the deflection of the test beam and the elongation and movement of any anchoring system, but not less than 15 % of the average pile diameter or width. Use a single highcapacity jack when possible. When using a multiple jack system, provide jacks of the same make, model, and capacity, and supply the jack pressure through a common manifold. Fit the manifold and each jack with a pressure gage to detect malfunctions and imbalances.

6.2.3 Unless otherwise specified, the hydraulic jack(s), pressure gage(s), and pressure transducer(s) shall have a calibration to at least the maximum anticipated jack load performed within the six months prior to each test or series of tests. Furnish the calibration report(s) prior to performing a test, which shall include the ambient temperature and calibrations performed for multiple ram strokes up to the maximum stroke of the jack.

6.2.4 Each complete jacking and pressure measurement system, including the hydraulic pump, should be calibrated as a unit when practicable. The hydraulic jack(s) shall be calibrated over the complete range of ram travel for increasing and decreasing applied loads. If two or more jacks are to be used to apply the test load, they shall be of the same make, model, and size, connected to a common manifold and pressure gage, and operated by a single hydraulic pump. The calibrated jacking system(s) shall have accuracy less than 5% of the maximum applied load. When not feasible to calibrate a jacking system as a unit, calibrate the jack, pressure gages, and pressure transducers separately, and each of these components shall have accuracy less than 2% of the applied load.

6.2.5 Pressure gages shall have minimum graduations less than or equal to 1% of the maximum applied load and shall conform to ASME B40.100 Pressure Gages and Gauge Attachments with an accuracy grade 1A having a permissible error ± 1% of the span. Pressure transducers shall have a minimum resolution less than or equal to 1% of the maximum applied load and shall conform to ASME B40.100 with an accuracy grade 1A having a permissible error ± 1% of the span. When used for control of the test, pressure transducers shall include a real-time display.

6.2.6 If the maximum test load will exceed 900 kN (100 tons), place a properly constructed load cell or equivalent device in series with each hydraulic jack. Unless otherwise specified the load cell(s) shall have a calibration to at least the

NOT FOR BID

maximum anticipated jack load performed within the six months prior to each test or series of tests. The calibrated load cell(s) or equivalent device(s) shall have accuracy within 1 % of the applied load, including an eccentric loading of up to 1% applied at an eccentric distance of 1 in. (25 mm). After calibration, load cells shall not be subjected to impact loads. A load cell is recommended, but not required, for lesser load. If not practicable to use a load cell, include embedded strain gages located in close proximity to the jack to confirm the applied load.

6.2.7 Do not leave the hydraulic jack pump unattended at any time during the test. Automated jacking systems shall include a clearly marked mechanical override to safely reduce hydraulic pressure in an emergency.

6.3 *Load Applied by Hydraulic Jack(s) Acting Against Anchored Reaction Frame* (See Fig. 1 and Fig. 2):

6.3.1 Apply the test load to the pile or pile group with the hydraulic jack(s) reacting against the test beam(s) centered over the test pile, or pile group. Install a sufficient number of anchor piles or suitable anchoring device(s) to provide adequate reactive capacity for the test beam(s). Provide a clear distance from the test pile or pile group of at least five times the maximum diameter of the largest anchor or test pile(s), but not less than 2.5 m (8 ft). The Engineer may increase or decrease this minimum clear distance based on factors such as the type and depth of reaction, soil conditions, and magnitude of loads so that reaction forces do not significantly effect the test results.

NOTE 4—Excessive vibrations during anchor pile installation in non-cohesive soils may affect test results. Anchor piles that penetrate deeper than the test pile may affect test results. Install the anchor piles nearest the test pile first to help reduce installation effects.

6.3.2 Provide sufficient clearance between the bottom flange(s) of the test beam(s) and the top of the test pile or pile group to place the necessary bearing plates, hydraulic jack(s), hemispherical bearing, and load cell(s). For test loads of high magnitude requiring several anchors, a steel framework may be required to transfer the applied loads from the test beam(s) to the anchors.

6.3.3 When testing individual inclined piles, align the jack(s), test beam(s), and anchor piles with the inclined longitudinal axis of the test pile.

6.3.4 Attach the test beam(s) (or reaction framework if used) to the anchoring devices with connections designed to adequately transfer the applied loads to the anchors so as to prevent slippage, rupture or excessive elongation of the connections under maximum required test load.

6.4 *Load Applied by Hydraulic Jack(s) Acting Against a Weighted Box or Platform* :

(Fig. 3):

6.4.1 Apply the test load to the pile or pile group with the hydraulic jack(s) reacting against the test beam(s) centered over the test pile, or pile group. Center a box or platform on the test beam(s) with the edges of the box or platform parallel to the test beam(s) supported by cribbing or piles placed as far from the test pile or pile group as practicable, but in no case less than a clear distance of 1.5 m (5 ft). If cribbing is used, the bearing area of the cribbing at ground surface shall be sufficient to prevent adverse settlement of the weighted box or platform.

6.4.2 The test beam(s) shall have sufficient size and strength to prevent excessive deflection under the maximum load, and sufficient clearance between the bottom flange(s) of the test beam(s) and the top of the test pile or pile group to place the necessary bearing plates, hydraulic jack(s), hemispherical bearing, and load cell(s). Support the ends of the test beam(s) on temporary cribbing or other devices.

NOT FOR BID

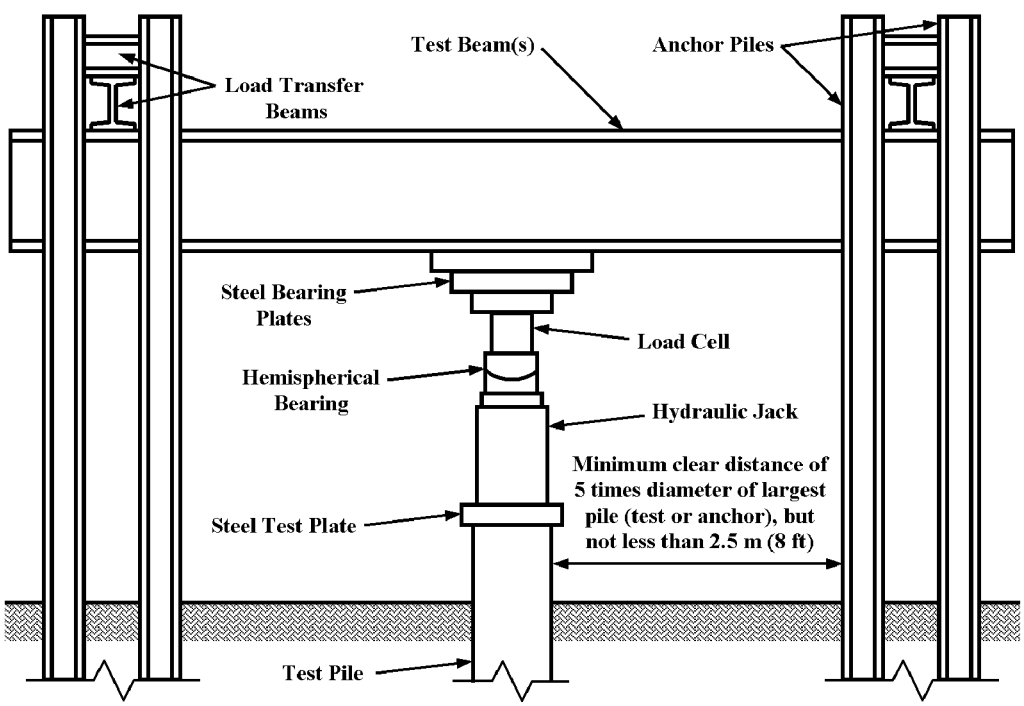

FIG. 1 Schematic of Hydraulic Jack Acting Against Anchored Reaction Frame

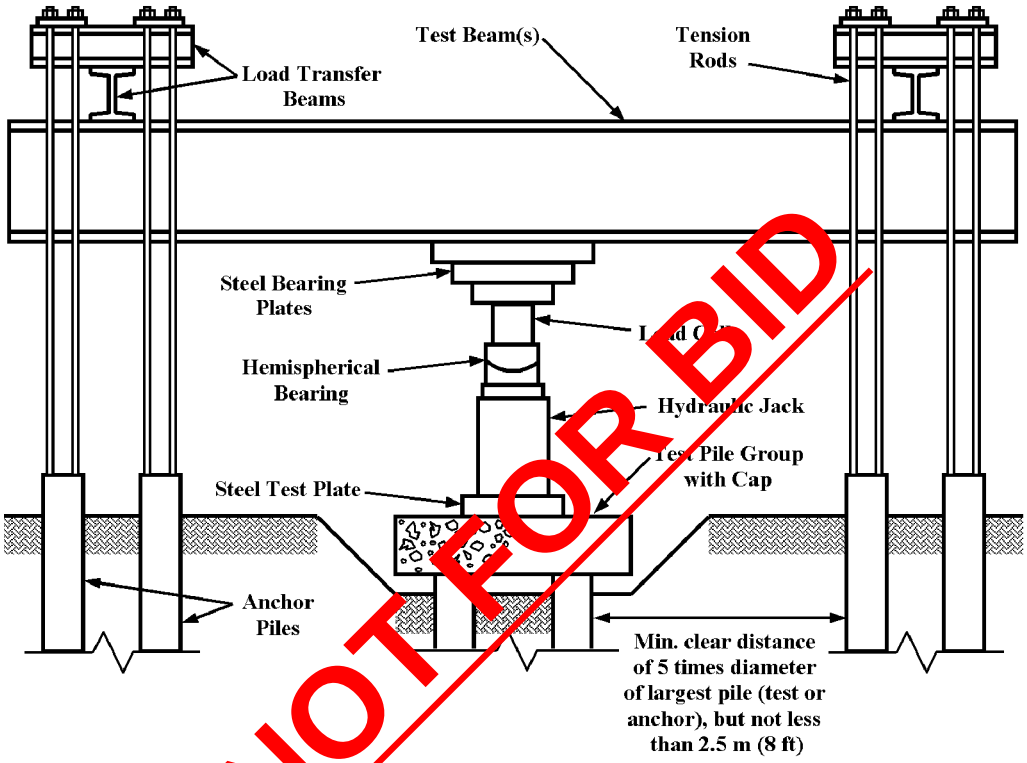

FIG. 2 Schematic Hydraulic Jack on a Pipe Group Acting Against Anchored Reaction Frame

NOT FOR BID

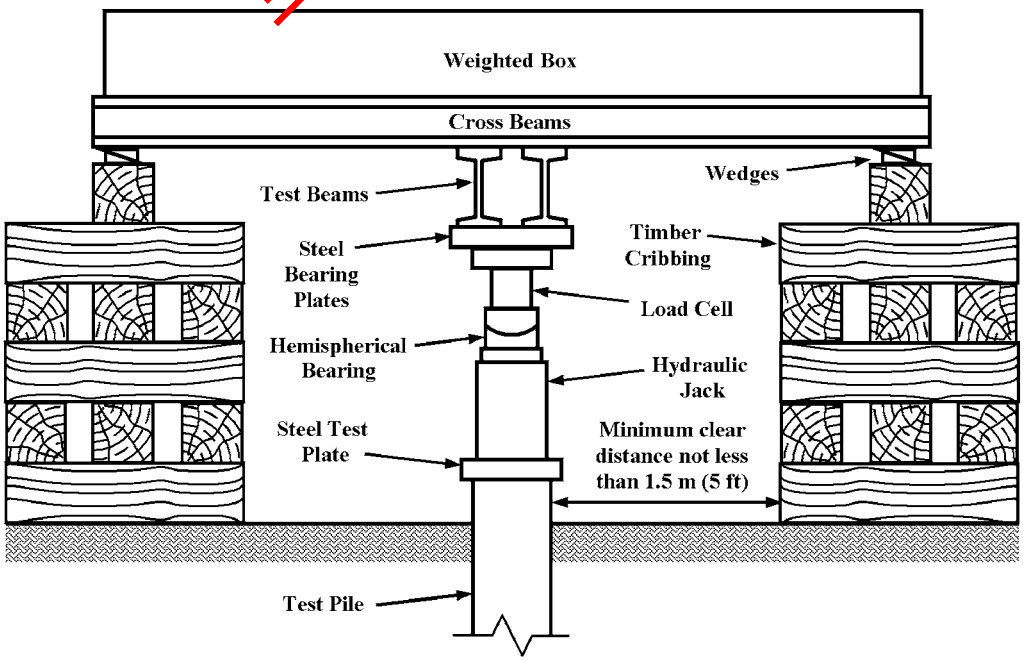

FIG. 3 Schematic Hydraulic Jack Acting Against Weighted Box or Platform

6.4.3 Load the box or platform with any suitable material such as soil, rock, concrete, steel, or water-filled tanks with a total weight (including that of the test beam(s) and the box or platform) at least 10 % greater than the maximum anticipated test load.

6.5 *Load Applied Directly Using Known Weights* (See Fig. 4, Fig. 5, and Fig. 6):

6.5.1 Center on the test pile or pile cap a test beam(s) of known weight and of sufficient size and strength to avoid excessive deflection under load with the ends supported on

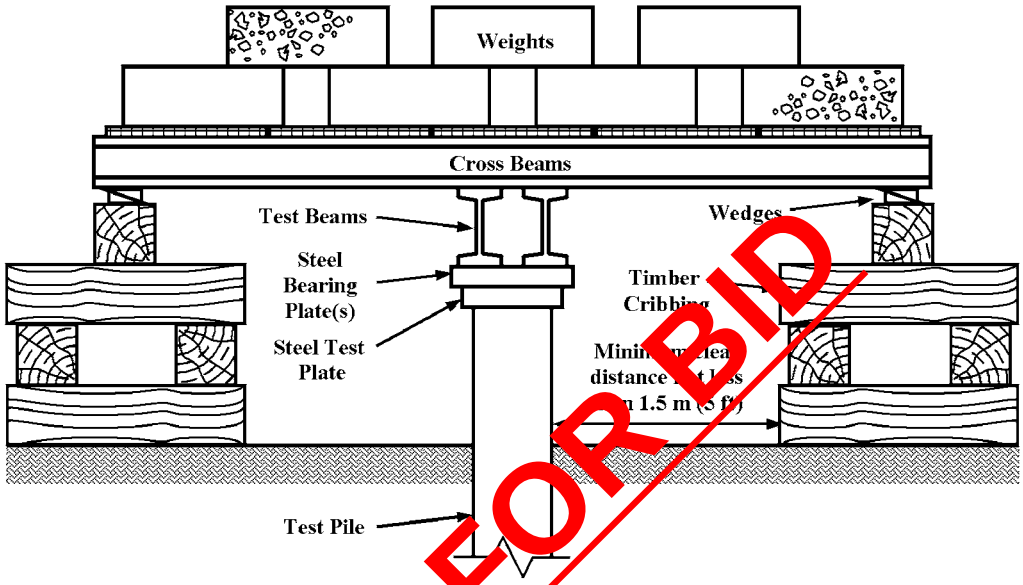

FIG. 4 Schematic of Direct Loading on a Single Pile Using Weighted Platform

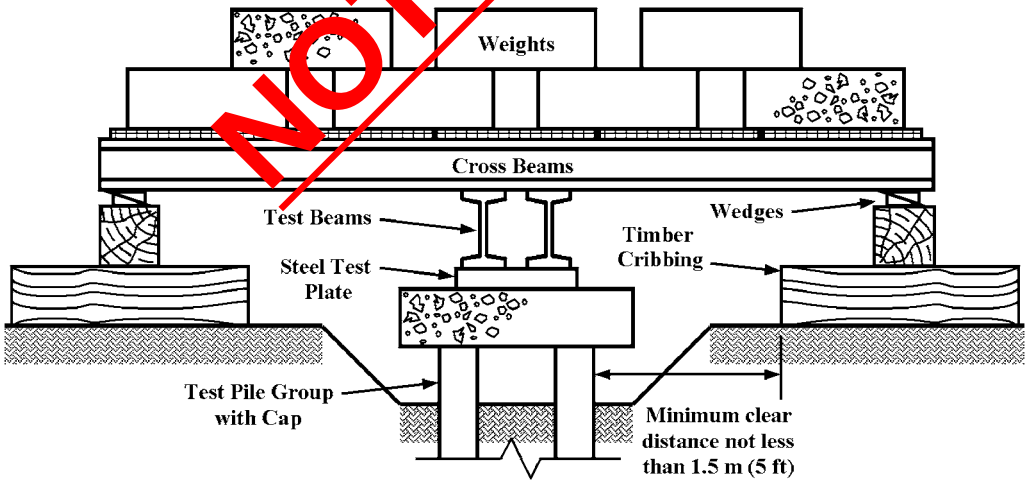

FIG. 5 Schematic of Direct loading on a Pile Group Using a Weighted Platform

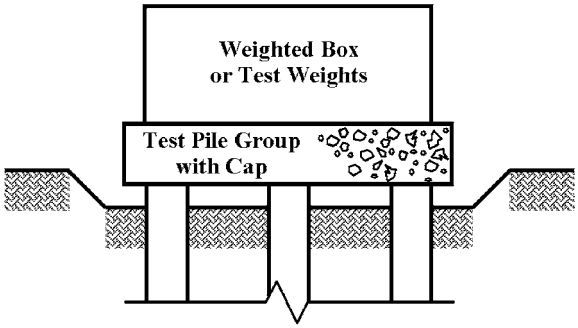

FIG. 6 Schematic of Direct Loading on a Pile Group

temporary cribbing if necessary to stabilize the beam(s). Alternatively, the known test weights or loading material may be applied directly on the pile or pile cap.

6.5.2 Center and balance a platform of known weight on the test beam(s) or directly on the pile cap with overhanging edges of the platform parallel to the test beam(s) supported by

NOT FOR BID

cribbing or by piles capped with timber beams, so that a clear distance of not less than 1.5 m (5 ft) is maintained between the supports and the test pile or pile group.

6.5.3 Place sufficient pairs of timber wedges between the top of the cribbing or timber cap beams and the bottom edges of the platform so that the platform can be stabilized during loading or unloading.

6.5.4 Apply the test loads to the pile or pile group using known weights. When loading the platform, remove any temporary supports at the ends of the test beam(s) and tighten the wedges along the bottom edges of the platform so that the platform is stable. Use loading materials such as steel or concrete so that the weight of incremental loads can be determined with accuracy of 5 %.

NOTE 5— Depending on the magnitude of the applied load and axial movement, platform stability may be difficult to control at or near a failure load when applying the load directly. The user should consider using a different load method when anticipating a failure load.

NOTE 6— The loading apparatus described in 6.5 may allow target rod level readings directly on the center of the pile top or pile cap to measure the pile top movement described in 7.2.4. To accommodate the target rod use a double test beam with sufficient space between the beams, leave a hole through the platform, and leave a line of sight between the test weights for survey level readings.

6.6 *Other Types of Loading Apparatus (optional)*— The Engineer may specify another type of loading apparatus satisfying the basic requirements of 6.1 or 6.2.

7. Apparatus for Measuring Movement

7.1 *General*:

7.1.1 Reference beams and wirelines shall be supported independent of the loading system, with supports firmly embedded in the ground at a clear distance from the test pile of at least five times the diameter of the test pile(s) but not less than 2.5 m (8 ft), and at a clear distance from any anchor piles of at least five times the diameter of the anchor pile(s) but not less than 2.5 m (8 ft). Reference supports shall also be located as far as practicable from any cribbing supports but not less than a clear distance of 2.5 m (8 ft).

7.1.2 Reference beams shall have adequate strength, stiffness, and cross bracing to support the test instrumentation and minimize vibrations that may degrade measurement of the pile movement. One end of each beam shall be free to move laterally as the beam length changes with temperature variations. Supports for reference beams and wirelines shall be isolated from moving water and wave action. Provide a tarp or shelter to prevent direct sunlight and precipitation from affecting the measuring and reference systems.

7.1.3 Dial and electronic displacement indicators shall conform to ASME B89.1.10.M Dial Indicators (For Linear Measurements) and should generally have a travel of 100 mm (4 in), but shall have a minimum travel of at least 50 mm (2 in). Provide greater travel, longer stems, or sufficient calibrated blocks to allow for greater travel if anticipated. Electronic indicators shall have a real-time display of the movement available during the test. Provide a smooth bearing surface for the indicator stem perpendicular to the direction of stem travel, such as a small, lubricated, glass plate glued in place. Except as required in 7.4, indicators shall have minimum graduations of 0.25 mm (0.01 in) or less, with similar accuracy. Scales used to measure pile movements shall have a length no less than 150 mm (6 in), minimum graduations of 0.5 mm (0.02 in) or less, with similar accuracy, and shall be read to the nearest 0.1 mm (0.005 in). Survey rods shall have minimum graduations of 1 mm (0.01 ft) or less, with similar accuracy, and shall be read to the nearest 0.1 mm (0.001 ft).

7.1.4 Dial indicators and electronic displacement indicators shall be in good working condition and shall have a full range calibration within three years prior to each test or series of tests. Furnish calibration reports prior to performing a test, including the ambient air temperature during calibration

7.1.5 Clearly identify each displacement indicator, scale, and reference point used during the test with a reference number or letter.

7.1.6 Indicators, scales, or reference points attached to the test pile, pile cap, reference beam, or other references shall be firmly affixed to prevent movement relative to the test pile or pile cap during the test. Unless otherwise approved by the Engineer, verify that reference beam and wireline supports do not move during the test by using a surveyor's level to take readings on a survey rod or a scale with reference to a permanent bench mark located outside of the immediate test area.

7.2 *Pile Top Axial Movements (See Fig. 7)*—

7.2.1 Unless otherwise specified, all axial compressive load tests shall include apparatus for measuring the axial movement of the test pile top, or piles within a group, or the pile group cap. This apparatus shall include a primary measurement system and at least one redundant, secondary system, using at least two of the systems described herein.

NOTE 7—When possible use displacement indicators as the primary system to obtain the most precise measurements. Use the redundant system(s) to check top movement data and provide continuity when the measuring system is disturbed or reset for additional movement.

NOTE 8—Pile top movements measured directly on the test pile have superior accuracy to measurements on the test plate, but with negligible difference when using a thin layer of grout on a sound pile, or with a test plate welded to the pile. However, users may wish to verify that the test plate and pile top do not move relative to each other using additional indicators (Fig. 7).

7.2.2 *Displacement Indicators*— Mount a minimum of two displacement indicators on the reference beams to bear on the pile top at axisymmetric points equidistant from the center of the test pile, or pile cap, with stems parallel to the longitudinal axis of the pile, inclined pile, or pile group. Orient two parallel reference beams, one on each side of the test pile or pile cap, in a direction that permits placing their supports as far as feasible from anchor piles or cribbing. Alternatively, mount the two indicators on axisymmetric points equidistant from the center of the test pile, or pile cap, with the stems parallel to the longitudinal axis of the pile or pile group to bear on the reference beams.

NOTE 9—For piles having a width or diameter greater than 2.5 ft (0.75 m), and for piles without good lateral support near the top, use four displacement indicators to compensate for lateral movement or rotation of the pile top.

NOTE 10—For tests on inclined piles, monitor lateral pile movements as

NOT FOR BID

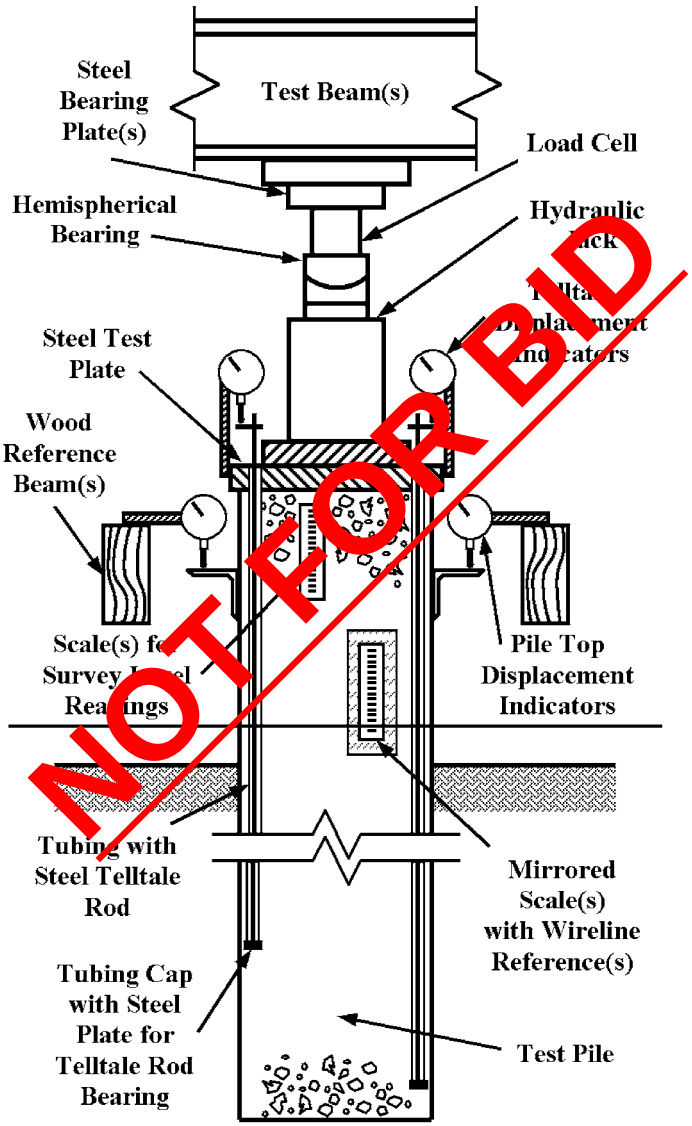

NOT FOR BID

FIG. 7 Schematic of Instrumentation of Measuring Axial Pile Movements

described in 7.3to detect instability that may result from gravitational forces during the test.

7.2.3 *Wireline, Mirror, and Scale*—Orient two wirelines parallel to each other and perpendicular to and located on opposite sides equidistant from the axis of the test pile, or pile group, in a direction that permits placing the wireline supports as far as practicable from anchor piles or cribbing. The wirelines shall include a weight or spring to maintain a constant tension force in the wire, so that, when plucked or tapped, the wireline will return to its original position. Use clean, uncoated steel wire with a diameter of 0.25 mm (0.01 in) or less for the wirelines. Each wireline shall pass across, and remain clear of, a scale mounted on the test pile or pile cap parallel to the axis of the pile or pile group. Mount the scale on a mirror affixed to the test pile or pile cap and use the wireline as a reference line to read the scale. Use the mirror to eliminate parallax error in the scale reading by lining up the wire and its image in the mirror. Align the wire not more than 13 mm (0.5 in) from the face of the scale.

7.2.4 *Surveyor's Level or Laser Beam*—Movement readings obtained using a surveyor's level or laser beam shall be taken on a survey rod or a scale and shall be referenced to a permanent bench mark located outside of the immediate test area or, alternatively, the surveyor's level shall be mounted on an object of fixed elevation (for example a driven pile) outside of the immediate test area. Reference points or scales used in taking displacement readings shall be mounted on the sides of the test pile or pile cap and located on opposite sides except that reference points may be located on top of the pile cap or readings may be taken on a single fixed point in the center of the test pile top, test plate or pile cap (see Fig. 6).

7.2.5 *Other Types of Measurement Systems (Optional)*—The Engineer may specify another type of measurement system satisfying the basic requirements of 7.2.

7.3 *Lateral Movements (Optional)* Measure the lateral movements of the top of the test pile or pile group to within an accuracy of 2.5 mm (0.1 in) using either of the following

methods: *(a)* two displacement indicators oriented in orthogonal directions, mounted with their stems perpendicular to the longitudinal axis of the test pile(s) and bearing against lubricated glass plates affixed to the sides of the test pile or pile cap, or *(b)* a surveyor's transit reading from scales mounted laterally on two perpendicular sides of the test pile or pile cap with readings referenced to fixed foresights or backsights. For tests on inclined piles, orient the indicators or scales parallel and perpendicular to the vertical plane of the incline and perpendicular to the longitudinal axis of the test pile(s).

7.4 *Pile Compression and Strain Measurements (Optional)* :

7.4.1 Measure the compression or strain of the test pile during loading at locations specified by the Engineer to help evaluate the distribution of load transfer from the pile to the surrounding soil.

7.4.2 Determine pile compression using displacement indicators to measure the relative movement between the pile top and an unstrained telltale rod (Figs. 7-10) bearing at a point within the pile. Unless located on the pile axis, install paired telltales in the pile with the rods in each pair oriented symmetrically opposite each other and equidistant from and parallel to the pile axis. Terminate telltale pairs near the pile bottom and at other points along the pile as required. Measure and record the distance from the pile top to the telltale termination point(s) to the nearest 10 mm (0.5 in). Install the telltales in a sheath or casing to insure free rod movement during the test. The rods shall have a rounded tip that bears on a clean steel plate affixed to the pile or shall be threaded into a nut affixed to the pile. Clean the telltale rods prior to installation, oil them during or after installation, and provide centralizers to restrain lateral movement but not axial movement at the pile top. The displacement indicators shall have a travel of at least a 5 mm (0.2 in) and minimum graduations of 0.01 mm (0.0001 in) or less, with similar accuracy. Mount a smooth bearing surface for the indicator stem on the telltale rod perpendicular to the direction of stem travel, such as a small, lubricated, glass plate clamped or glued in place.

7.4.3 *Other types of telltale (Optional)*—The Engineer may specify another type of telltale for the measurement of pile compression that satisfies the basic requirements of 7.4.2.

7.4.4 Measure pile strain directly using strain gages installed along the length of the pile axis. Install single gages along the pile axis, or gage pairs with the gages in each pair oriented symmetrically opposite each other and equidistant from and parallel to the pile axis. Measure and record the distance from the pile top to the gages to the nearest 10 mm (0.5 in). The gage type and installation shall be as specified by the Engineer and shall include temperature compensation as recommended by the gage manufacturer. Where feasible, measurement programs involving strain gages should include calibration of the fully instrumented pile and a complete history of gage readings starting before their installation in the pile.

NOTE 11—To interpret strain measurements and estimate pile stresses, the Engineer will require a depth profile describing the variation of pile constituents and their strength, cross sectional area, and stiffness. Stiffness properties may vary with the applied stress, especially for grout or concrete. Obtain this information from installation records and separate material property tests as needed.

8. Procedure

8.1 **Loading**:

8.1.1 *General:*

8.1.1.1 Apply test loads following one of the procedures described below for each test method, or as modified by the Engineer. If feasible, the maximum applied load should reach a failure that reflects the ultimate axial static compressive load capacity of the pile(s). Do not exceed the safe structural capacity of the pile, pile group, or the loading apparatus. Do not leave a loaded pile unattended.

8.1.1.2 To avoid excessive creep and possible structural failure of cast-in-place concrete piles, delay load testing after concrete placement to permit the fresh concrete to gain adequate strength and stiffness. Use test cylinders or cores of the fresh concrete to determine the appropriate wait time, recognizing that the test cylinders will generally cure more quickly than concrete in the pile.

8.1.1.3 The static axial capacity of piles typically changes as time elapses after pile installation, possibly increasing (setup) or decreasing (relaxation), depending on the soil or rock properties and the pore water pressure and soil structure disturbance induced by installation. This behavior may affect both driven piles and cast-in-place piles. The Engineer may specify a waiting period between pile installation and static testing to investigate time effects. The waiting period may range from 3 to 30 days, or longer, based on testing (for example redriving piles) or prior experience.

8.1.1.4 When temporarily dewatering a test site with piles installed in granular soils, maintain the groundwater level as near to the nominal elevation as possible and record the elevation of the groundwater surface during the test. Use the groundwater surface elevation measured during the test to correct the axial pile capacity when the groundwater level during the test deviates more than 1.5 m (5 ft) from the service groundwater elevation.

8.1.2 *Procedure A: Quick Test*—Apply the test load in increments of 5 % of the anticipated failure load. Add each load increment in a continuous fashion and immediately following the completion of movement readings for the previous load interval. Add load increments until reaching a failure load but do not exceed the safe structural capacity of the pile, pile group, or loading apparatus. During each load interval, keep the load constant for a time interval of not less than 4 min and not more than 15 min, using the same time interval for all loading increments throughout the test. Remove the load in five to ten approximately equal decrements, keeping the load constant for a time interval of not less than 4 min and not more than 15 min, using the same time interval for all unloading decrements Consider longer time intervals for the failure load to assess creep behavior and for the final zero load to assess rebound behavior.

8.1.3 *Procedure B: Maintained Test (Optional)*:

8.1.3.1 Unless failure occurs first, load the pile to a maximum maintained load of 200 % of the anticipated design load for tests on individual piles, or 150 % of the pile group design load, applying the load in increments of 25 % of the design load. Maintain each load increment until the rate of axial movement does not exceed 0.25 mm (0.01 in) per hour, with a

NOT FOR BID

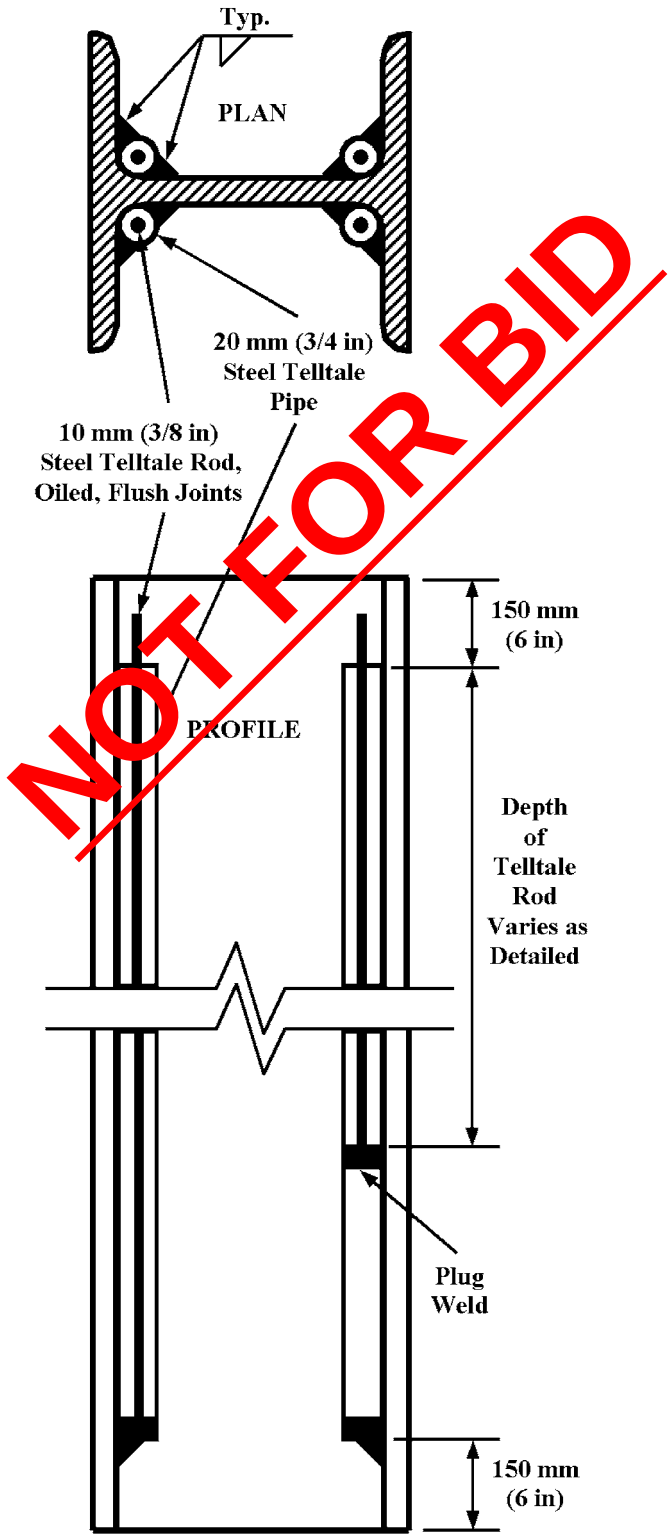

Note: Install Telltale Rods After Driving Pile

FIG. 8 Possible Installation of Telltales for Steel H-Piles

minimum time adequate to verify this movement rate based on the accuracy of the movement indicator readings, and with a maximum of 2 hr. After applying the maximum load and reaching an overall test duration of at least 12 hr, begin unloading when the axial movement measured over a period of 1 hr does not exceed 0.25 mm (0.01 in); otherwise allow the maximum load to remain on the pile or pile group for 24 hr. If failure occurs during loading, maintain the failure load, or the

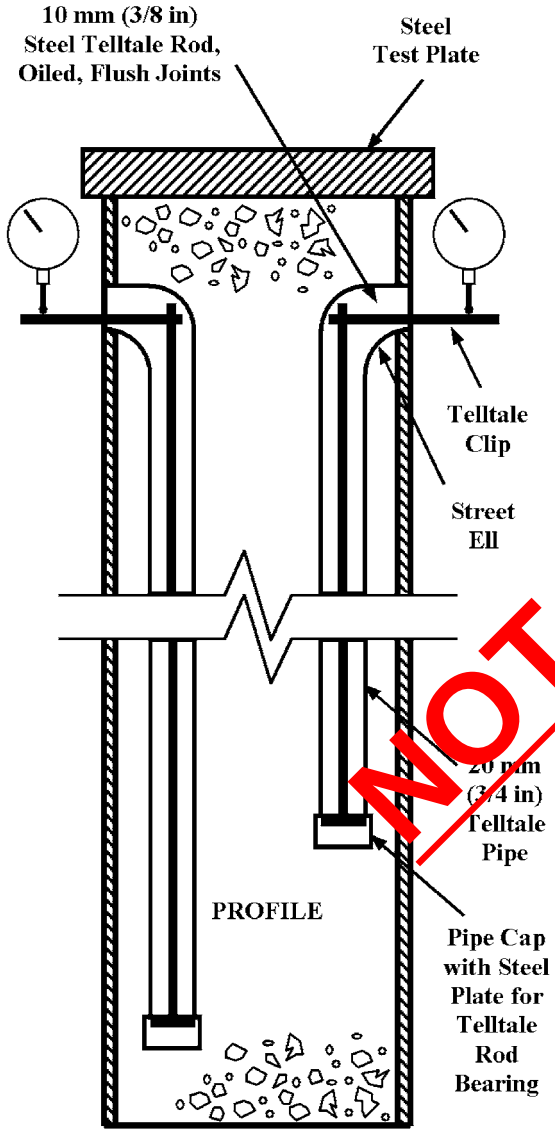

Note: Install Telltale Pipes, Install Telltale Rods, and Fill Pipe with Concrete After Driving

FIG. 9 Possible Installation of Telltales for Pipe Piles

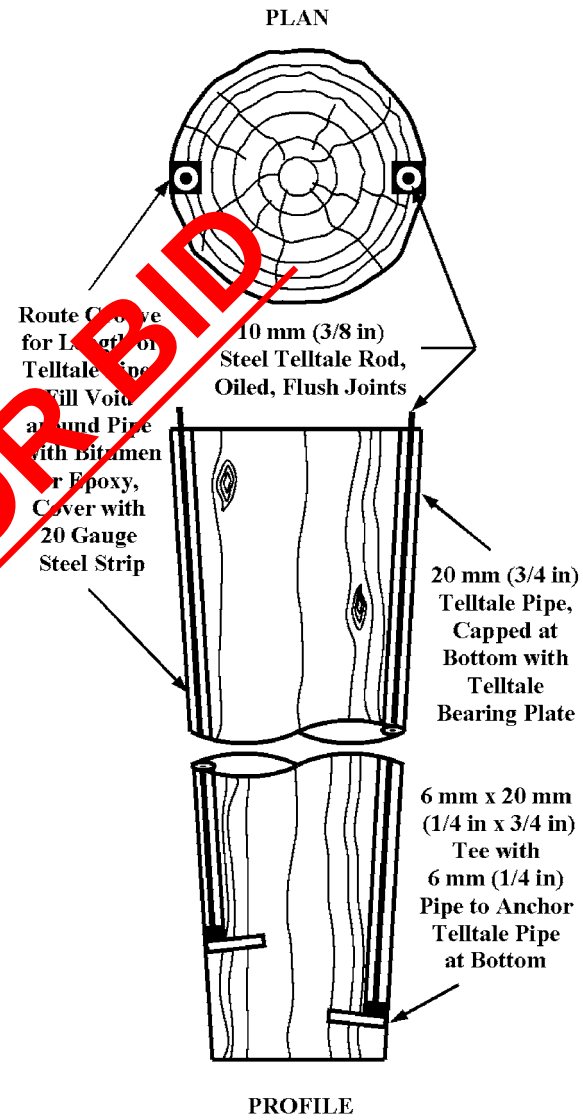

Note: Install Telltale Rods After Driving

FIG. 10 Possible Installation of Telltales for Timber Piles

NOT FOR BID

maximum load possible, until the total axial movement equals 15 % the pile diameter or width. After completing the final load increment, remove the load in decrements of 25 % of the maximum test load with 1 hr between decrements.

8.1.3.2 If using the direct loading method described in 6.5, include in the first load increment the weight of the test beam(s) and the platform that bear directly on the pile. Before adding or removing load increments, tighten the wedges along the platform edges to stabilize the platform. Place or remove load increments in a manner which avoids impact and maintains the load balanced at all times. After each load increment has been added, loosen (but do not remove) the wedges and keep them loose to permit the full load to act on the pile as it moves.

NOTE 12— If negligible permanent axial movement occurs after unloading the pile, consider reloading the test pile(s) to a greater load or use the procedure in section 8.4. If the test pile(s) approach failure during the maintained loading procedure, consider decreasing the final load increments to obtain a more accurate failure load.

8.1.4 *Procedure C: Loading in Excess of Maintained Test (Optional)*—After the load has been applied and removed in accordance with 8.3, reload the test pile or pile group to the maximum maintained load in increments of 50 % of the pile or pile group design load, allowing 20 min between load increments. Then apply additional load in increments of 10 % of the design load for the pile or pile group until reaching the maximum required load or failure, allowing 20 min between load increments. If failure occurs continue jacking the pile until the settlement equals 15 % of the pile diameter or width. If failure does not occur, hold the full load for 2 hr and then remove the load in four equal decrements, allowing 20 min between decrements.

8.1.5 *Procedure D: Constant Time Interval Loading Test*—Follow the procedures of , but apply the load in increments of 20 % of the pile or group design load with 1 hr between load increments. Then unload the piles with 1 hr between load decrements.

8.1.6 *Procedure E: Constant Rate of Penetration Test (optional)*

8.1.6.1 The apparatus for applying loads shall have a capacity as specified and shall be in accordance with section 6.3 or 6.4. Use a mechanical hydraulic jacking system equipped with a bleed valve, variable speed device, or other means for providing a smooth variable pressure delivery.

8.1.6.2 Vary the applied load as necessary to maintain a pile penetration rate of 0.25 to 1.25 mm (0.01 to 0.05 in) per minute for cohesive soil or 0.75 to 2.5 mm (0.03 to 0.10 in) per minute for granular soils, or as specified by the Engineer. Continue loading the pile until achieving continuous penetration at the specified rate. Hold the maximum applied load until obtaining a total pile penetration of at least 15 % of the average pile diameter or width, or until the pile stops penetrating. Gradually release the final load to protect the load and measurement systems

8.1.6.3 Control the rate of penetration by checking the time taken for successive small equal increments of penetration and then adjusting the jacking accordingly. Alternatively, use a mechanical or electrical device to monitor and control the penetration rate so that it remains constant.

8.1.6.4 See for measurement procedures. When using a video recording system, locate all gages for easy reading within the camera's field of view, as well as a digital clock displaying time to the nearest second.

8.1.7 *Procedure F: Constant Movement Increment Test (Optional)*

8.1.7.1 Apply test loads in increments required to produce pile top movement increments equal to approximately 1 % of the average pile diameter or width. Vary the applied load as necessary to maintain each movement increment, and do not apply additional load until the rate of load variation to hold that movement increment constant is less than 1 % of the total applied load per hr. Continue loading the pile in such increments until the total movement equals 15 % of the average pile diameter or width.

8.1.7.2 Remove the final test load in four equal decrements after maintaining the final movement increment until the rate of load variation is less than 1 % of the total applied load per hour. After removing the first load decrement, do not remove additional decrements until the rate of pile rebound for the preceding load decrement is less than 0.3 % of the average pile diameter or diagonal dimension per hour.

8.1.8 *Procedure G: Cyclic Loading Test (optional)*— For the first application of test load increments, apply such increments in accordance with . After the application of loads equal to 50, 100 and 150 % of the pile design load for tests of individual piles or 50 and 100 % of the group design load for tests on pile groups, maintain the total test load in each case for 1 hr and remove the load in decrements equal to the loading increments, allowing 20 min between decrements. After removing each maximum applied load, reapply the load to each preceding load level in increments equal to 50 % of the design load, allowing 20 min between increments. Apply additional loads in accordance with. After the maximum required test load has been applied, hold and remove the test load in accordance with .

8.2 **Recording Test Readings**

8.2.1 *General:*

8.2.1.1 For the recorded time intervals described below for each test method, record the time, applied load, and movement readings (displacement, and strain if measured) for each properly identified gage, scale, or reference point taken as nearly simultaneously as practicable. The Engineer may specify different reading intervals from those given below as needed to satisfy the objectives of a particular test pile program. Obtain additional test readings as specified by the Engineer, or as convenient for testing purposes, i.e. when using a datalogger to record readings at a constant time interval. When using the loading procedure described in 6.5, take the zero-load reading before placing the test beam(s) and platform on the pile(s). Clearly record and explain any field adjustments made to instrumentation or recorded data.

8.2.1.2 Verify the stability of the reference beams and load reaction system (including reaction piles) using a surveyor's level or transit and target rod or scales to determine movement. Record readings taken before applying any test load, at the proposed design load, at the maximum test load, and after the removal of all load. Intermediate readings for each load increment are recommended to provide additional quality assurance and detect potential failure of the load reaction system.

8.2.1.3 When using embedded strain gages to obtain incremental strain measurements as in 7.4 record strain readings just before starting the test and, as a minimum, during the test whenever recording readings of time, load, and movement. The Engineer may also require gage readings taken before and after the pile installation to obtain a complete strain history and investigate residual stress behavior.

8.2.2 *Procedure A: Quick Test*—Record test readings taken at 0.5, 1, 2 and 4 min after completing the application of each load increment, and at 8 and 15 min when permitted by longer load intervals. Record test readings taken at 1 and 4 min after completing each load decrement, and at 8 and 15 min when permitted by a longer unload intervals. Record readings taken at 1, 4, 8 and 15 min after all load has been removed.

NOTE 13—The movement measured between readings for a given load increment provides an indication of creep behavior.

8.2.3 *Procedure B: Maintained Test (also Procedures C, D, and G) (Optional)*—Record test readings taken before and after the application of each load increment or decrement. During each load interval, provided that the test pile or pile group has not failed, record additional readings taken at 5, 10, and 20 min following application of the load increment, and every 20 min thereafter as needed. After applying the total load, provided that the test pile or pile group has not failed, record additional readings taken at 5, 10, and 20 min, then every 20 min up to 2 hrs, then every hour from 2 to 12 hrs, and then every 2 hrs from 12 to 24 hrs as needed. If pile failure occurs, also record readings taken immediately before removing the first load

NOT FOR BID

decrement. During unloading, record readings taken at time intervals of 20 min. Record final readings 12 hr after removing all load.

8.2.4 *Procedure E: Constant Rate of Penetration (Optional)*—Record test readings taken at least every 30 s or at sufficient intervals to determine the actual rate of penetration. Operate any automatic monitoring and recording devices continuously during each test. When the test pile has achieved its specified rate of penetration, continue to take and record readings for the duration of the loading, and determine the maximum load applied. Take and record readings immediately after unloading and again 1 h after removing all load.

8.2.5 *Procedure F: Constant Movement Increment (Optional)*—Record test readings taken immediately before and after each movement increment with sufficient intermediate readings so as to determine the rate of load variation and the actual load required to maintain each settlement increment. During unloading, record readings taken immediately before and after the removal of each load decrement with sufficient intermediate readings so as to determine the rate of pile rebound. Record final readings taken 12 h after removing all load.

9. Safety Requirements

9.1 All operations in connection with pile load testing shall be carried out in such a manner so as to minimize, avoid, or eliminate the exposure of people to hazard. The following safety rules are in addition to general safety requirements applicable to construction operations:

9.1.1 Keep all test and adjacent work areas, walkways, platforms, etc. clear of scrap, debris, small tools, and accumulations of snow, ice, mud, grease, oil, or other slippery substances.

9.1.2 Provide timbers, blocking and cribbing materials made of quality material and in good serviceable condition with flat surfaces and without rounded edges.

9.1.3 Hydraulic jacks shall be equipped with spherical bearing plates or shall be in complete and firm contact with the bearing surfaces and shall be aligned so as to avoid eccentric loading.

9.1.4 Loads shall not be hoisted, swung, or suspended over anyone and shall be controlled by tag lines.

9.1.5 The test beam(s), reaction frame, anchor piles and other anchoring devices, test boxes, and their connections and supports shall be designed and approved by a qualified engineer and installed to transmit the required loads with an adequate factor of safety.

9.1.6 For tests on inclined piles, all inclined jacks, bearing plates, test beam(s), or frame members shall be firmly fixed into place or adequately blocked to prevent slippage upon release of load.

9.1.7 All reaction loads shall be stable and balanced. When using loading method in 6.5, safety wedges shall be in place at all times to prevent the platform from tipping. During testing, movements of the reaction load or system should be monitored to detect impending unstable conditions.

9.1.8 All test beams, reaction frames, platforms, and boxes shall be adequately supported at all times.

9.1.9 Only authorized personnel shall be permitted within the immediate test area, and only as necessary to monitor test equipment. As best as possible, locate pumps, load cell readouts, dataloggers, and test monitoring equipment at a safe distance away from jacks, loaded beams, weighted boxes, dead weights, and their supports and connections.

10. Report

10.1 The report of the load test shall include the following information as required by the Engineer and as appropriate to the pile type, test apparatus, and test method:

10.1.1 *General*:

10.1.1.1 Project identification and location,

10.1.1.2 Test site location,

10.1.1.3 Owner, structural engineer, geotechnical engineer, pile contractor, boring contractor,

10.1.1.4 Nearest test boring(s) or sounding(s), and their location with reference to test location,

10.1.1.5 Insitu and laboratory soil test results, and

10.1.1.6 Horizontal and vertical control datum.

10.1.2 *Pile Installation Equipment*:

10.1.2.1 Make, model, type and size of hammer,

10.1.2.2 Weight of hammer and ram,

10.1.2.3 Stroke or ram,

10.1.2.4 Rated energy of hammer,

10.1.2.5 Rated capacity of boiler or compressor,

10.1.2.6 Type and dimensions of capblock and pile cushion,

10.1.2.7 Weight and dimensions of drive cap and follower,

10.1.2.8 Size of predrilling or jetting equipment,

10.1.2.9 Weight of clamp, follower, adaptor, and oscillator for vibratory driver.

10.1.2.10 Type, size, length, and weight of mandrel,

10.1.2.11 Type, size, and length of auger,

10.1.2.12 Type and size of grout pump, and

10.1.2.13 Type, size, wall thickness, and length of drive casing.

10.1.2.14 Detailed description of drilling equipment and techniques,

10.1.2.15 Size, type, length, and installation or extraction method of casings or a combination thereof.

10.1.3 *Test and Anchor Pile Details*:

10.1.3.1 Identification and location of test and anchor piles,

10.1.3.2 Design load of test pile or pile group,

10.1.3.3 Type and dimensions of test and anchor piles

10.1.3.4 Test pile material including basic specifications,

10.1.3.5 Pile quality including knots, splits, checks and shakes, and straightness of piles, preservative treatment and conditioning process used for timber test piles including inspection certificates,

10.1.3.6 Wall thickness of pipe test pile,

10.1.3.7 Weight per foot of H test pile,

10.1.3.8 Description of test pile tip reinforcement or protection,

10.1.3.9 Description of banding–timber piles,

10.1.3.10 Description of special coatings used,

10.1.3.11 Test pile (mandrel) weight as driven,

10.1.3.12 Date precast test piles made,

10.1.3.13 Details of concrete and/or grout mix design,

NOT FOR BID

10.1.3.14 Concrete and/or grout placement techniques and records ,

10.1.3.15 Concrete and/or grout sample strengths and date of strength test,

10.1.3.16 Description of internal reinforcement used in test pile (size, length, number longitudinal bars, arrangement, spiral, or tie steel),

10.1.3.17 Condition of precast piles including spalled areas, cracks, top surface, and straightness of piles.

10.1.3.18 Effective prestress,

10.1.3.19 Degree of inclination for each pile,

10.1.3.20 Length of test pile during driving,

10.1.3.21 Final pile top and bottom elevations, and ground elevation referenced to a datum,

10.1.3.22 Embedded length–test and anchor piles,

10.1.3.23 Tested length of test pile, and

10.1.3.24 Final elevation of test pile butt(s) referenced to fixed datum.

10.1.4 *Test and Anchor Pile Installation*:

10.1.4.1 Date installed,

10.1.4.2 Volume of concrete or grout placed in pile,

10.1.4.3 Grout pressure used,

10.1.4.4 Description of pre-excavation or jetting (depth, size, pressure, duration),

10.1.4.5 Operating pressure for double acting and differential type hammers,

10.1.4.6 Throttle setting–diesel hammer (at final driving),

10.1.4.7 Fuel type–diesel hammer,

10.1.4.8 Horsepower delivered and frequency of vibratory driver during final 10 ft (3 m) of pile penetration,

10.1.4.9 Description of special installation procedures used such as piles cased off,

10.1.4.10 Type and location of pile splices,

10.1.4.11 Driving or drilling records,

10.1.4.12 Final penetration resistance (blows per inch),

10.1.4.13 Rate of pile penetration for last 10 ft (3 m) s/ft, vibratory driving,

10.1.4.14 When capblock replaced (indicate on log),

10.1.4.15 When pile cushion replaced (indicate on log),

10.1.4.16 Cause and duration of interruptions in pile installation, and

10.1.4.17 Notation of any unusual occurrences during installation.

10.1.5 *Pile Testing*:

10.1.5.1 Date and type of test,

10.1.5.2 Temperature and weather conditions during tests,

10.1.5.3 Number of piles in group test,

10.1.5.4 Brief description of load application apparatus, including jack capacity,

10.1.5.5 Description of instrumentation used to measure pile movement including location of indicators, scales, and other reference points with respect to pile top,

10.1.5.6 Description of special instrumentation such as strain rods or strain gages including location of such with reference to pile top,

10.1.5.7 Special testing procedures used,

10.1.5.8 Tabulation of all time, load, and movement readings,

10.1.5.9 Identification and location sketch of all gages, scales, and reference points,

10.1.5.10 Description and explanation of adjustments made to instrumentation or field data, or both,

10.1.5.11 Notation of any unusual occurrences during testing,

10.1.5.12 Test jack and other required calibration reports,

10.1.5.13 Groundwater level, and

10.1.5.14 Suitable photographs showing the test instrumentation and set-up.

11. Precision and Bias

11.1 *Precision*—Test data on precision is not presented due to the nature of this test method. It is either not feasible or too costly at this time to have ten or more agencies participate in an in situ testing program at a given site

11.1.1 Subcommittee D18.11 is seeking any data from the users of this test method that might be used to make a limited statement on precision.

11.2 *Bias*—There is no accepted reference value for this test method, therefore, bias cannot be determined.

12. Keywords

12.1 axial static pile capacity; field testing; jack; load cell; loading procedure; reference beam

NOT FOR BID

APPENDIX

(Nonmandatory Information)

X1. SOME FACTORS INFLUENCING INTERPRETATION OF TEST RESULTS

X1.1 Potential residual loads in the pile which could influence the interpreted distribution of load at the pile tip and along the pile shaft.

X1.2 Possible interaction of friction loads from test pile with upward friction transferred to the soil from anchor piles obtaining part or all of their support in soil at levels above the tip level of the test pile.

X1.3 Changes in pore water pressure in the soil caused by pile driving, construction fill, and other construction operations which may influence the test results for frictional support in relatively impervious soils such as clay and silt.

X1.4 Differences between conditions at time of testing and after final construction such as changes in grade or groundwater level.

X1.5 Potential loss of soil supporting test pile from such things as excavation and scour.

X1.6 Possible differences in the performance of a pile in a group or of a pile group from that of a single isolated pile.

X1.7 Affect on long-term pile performance of factors such as creep, environmental effects on pile material, negative friction loads not previously accounted for, and strength losses.

X1.8 Type of structure to be supported, including sensitivity of structure to settlements and relation between live and dead loads.

X1.9 Special testing procedures which may be required for the application of certain acceptance criteria or methods of interpretation.

X1.10 Requirement that non tested pile(s) have essentially identical conditions to those for tested pile(s) including, but not limited to, subsurface conditions, pile type, length, size and stiffness, and pile installation methods and equipment so that application or extrapolation of the test results to such other piles is valid.

NOT FOR BID

SUMMARY OF CHANGES

In accordance with Committee D 18 policy, this section identifies the location of the changes to this standard since the last edition (D 4719 – 94) that may impact the use of this test method.

(*1*) Reorganization following current D18 guidelines including elimination of the "Introduction" and addition of "Terminology" and "Significance and Use".
(*2*) Changed title and text to indicate multiple procedures and include deep foundations that function similar to driven piles.
(*3*) Inclusion of current D18 caveats, D 3740 and D 6026.
(*4*) Change Quick Test Method to preferred. Previous Standard Method now shown as "Maintained Test". The Engineer may choose and optional method as provided.
(*5*) When using jacks, require hemispherical bearings and load cell(s) for tests over 100 tons.
(*6*) Include specific requirements for test plates.
(*7*) Addition of references for pressure gages and displacement indicators.
(*8*) Additional requirements for measuring systems and testing time intervals.

ASTM International takes no position respecting the validity of any patent rights asserted in connection with any item mentioned in this standard. Users of this standard are expressly advised that determination of the validity of any such patent rights, and the risk of infringement of such rights, are entirely their own responsibility.

This standard is subject to revision at any time by the responsible technical committee and must be reviewed every five years and if not revised, either reapproved or withdrawn. Your comments are invited either for revision of this standard or for additional standards and should be addressed to ASTM International Headquarters. Your comments will receive careful consideration at a meeting of the responsible technical committee, which you may attend. If you feel that your comments have not received a fair hearing you should make your views known to the ASTM Committee on Standards, at the address shown below.

This standard is copyrighted by ASTM International, 100 Barr Harbor Drive, PO Box C700, West Conshohocken, PA 19428-2959, United States. Individual reprints (single or multiple copies) of this standard may be obtained by contacting ASTM at the above address or at 610-832-9585 (phone), 610-832-9555 (fax), or service@astm.org (e-mail); or through the ASTM website (www.astm.org).

(THIS PAGE INTENTIONALLY LEFT BLANK)

NOT FOR BID

NOT FOR BID

SECTION 132950 – PREFABRICATED PEDESTRIAN BRIDGE

PART 1 – GENERAL

1.1 SUMMARY

A. The item shall consist of furnishing, fabricating and erecting a fully engineered, prefabricated pedestrian clear span steel bridge in conformance with the requirements and details shown on the plans and/or the approved shop drawings. In addition, the item shall consist of furnishing and installing a hardwood timber bridge deck in accordance with these specifications and in reasonably close conformity with the lines, grades and dimensions as shown on the plans and/or established in the field.

1.2 SUBMITTALS

A. Product Data: For each type of product indicated.

B. Shop Drawings: Include plans, elevations, sections, details, and attachments details.

1. Shop drawings and design computations shall be submitted to the Engineer for approval prior to fabrication of material. Design calculations and drawings shall be signed and sealed by a Professional Engineer registered in the State of Delaware. Schematic drawings and diagrams shall be unique drawings, prepared to illustrate the specific portion of the work to be done.

2. Structural calculations for the bridge superstructure shall be submitted by the bridge manufacturer for review by the approving engineer. All calculations shall be signed and sealed by a Professional Engineer who is licensed in the state of Delaware. The calculations shall include all design information necessary to determine the structural adequacy of the bridge. The calculations shall include the following:

   i. All AISC allowable stress checks for axial, bending and shear forces in the critical member of each truss member type (i.e. top chord, bottom chord, floor beam, vertical, etc.).
   ii. Checks for the critical connection failure modes for each truss member type (i.e. vertical, diagonal, floor beam, etc.). Special attention shall be given to all welded tube on tube connections (see section 3.3.2 for design check requirements).
   iii. All bolted splice connections.
   iv. Main truss deflection checks. U-Frame stiffness checks (used to determine K factors for out-of-plane buckling of the top chord) for all half through or "pony" truss bridges.
   v. Deck design.

NOTE: The analysis and design of triangulated truss bridges shall account for moments induced in members due to joint fixity where applicable. Moments due to both truss deflection and joint eccentricity must be considered.

C. Material test reports and certificates.

D. Warranty

1. The bridge manufacturer shall warrant their steel structure(s) to be free of design, material and workmanship defects for a period of ten years from the date of delivery. Pultruded fiberglass deck material shall be manufactured by an ISO-9001 certified manufacturer and warranted.

E. Quality Certification

1. Bridge(s) shall be fabricated by a fabricator who is currently certified by the American Institute of Steel Construction to have the personnel, organization, experience, capability, and commitment to produce fabricated structural steel for the category "Major Steel Bridges" as set forth in the AISC Certification Program. Quality control shall be in accordance with procedures outlined for AISC certification. For painted structures, the fabricator must hold a "Sophisticated Paint Endorsement" as set forth in the AISC certification program. Furthermore, the bridge(s) shall be fabricated in a facility owned and/or leased by the corporate owner of the manufacturer, and fully dedicated to bridge manufacturing.

NOT FOR BID

PART 2 – PRODUCTS

2.1 QUALIFIED SUPPLIERS

A. The bridge manufacturer shall have been in the business of design and fabrication of bridges for a minimum of five years and provide a list of five successful bridge projects, of similar construction, each of which has been in service at least three years. List the location, bridge size, owner and contact reference for each bridge.

B. Some names of possible fabricators and suppliers of the pedestrian bridge are as follows:

Contech Engineered Solutions, LLC
8301 State Highway 29 North
Alexandria, Minnesota 56308
(800) 328-2047

Excel Bridge Manufacturing Company
12001 Shoemaker Avenue
Santa Fe Springs, California 90670
(320)762-1368

2.2 PERFORMANCE REQUIREMENTS

A. Structural Performance: The complete steel and timber structure assembly including bearings shall be designed using either load factor or working stress methods to provide appropriate safety factors

to withstand the combined and total effects of the following loads applied in combinations as shown in the latest AASHTO Standard Specifications for Highway Bridges:

1. Maximum uniform live load of 90 pounds per square foot applied to the entire deck area. Reduction of pedestrian live load shall be in accordance with AASHTO Guide Specification for Design of Pedestrian Bridges.

2. Live load AASHTO H10 vehicle load with no impact factor applied.

3. Dead load and superimposed dead loads of the structure.

4. Wind load in accordance with AASHTO Section 3.15 for a design wind speed of 85 mph.

5. Top chord lateral force of not less than 300 pounds per linear foot for half through truss.

6. Earthquake loading in accordance with 1996 AASHTO Standard Specifications, Division I-A (Seismic Design), Seismic Performance Category 'B'.

B. Pedestrian bridge shall be a low profile Pratt style, half-through pony truss design, cambered to offset 100% of the dead load deflections plus 1% of the full length of the bridge. Bridge railing shall be a continuous life safety rail with a maximum clear opening of 4 inches between vertical pickets, and one diagonal per truss panel. Railing height shall be 54 inches with a timber rub rail at the top and a steel toe plate at the bottom, as shown on the contract drawings. Bridge shall be designed and fabricated to meet the requirements of the Americans with Disabilities Act (ADA), and the current ADA Standards for Accessible Design.

NOT FOR BID

2.3 STEEL MATERIALS

A. The requirements of Section 615 of DelDOT's Standard Specifications shall be applicable for the steel superstructure except as modified herein and on the plans.

B. The steel members shall conform to the following: Bridges which are not to be painted shall be fabricated from high strength, low alloy, atmospheric corrosion resistant ASTM A847 cold-formed welded square and rectangular tubing and/or ASTM A588, or ASTM A242, ASTM A606 plate and structural steel shapes (Fy = 50,000 psi). The minimum corrosion index of atmospheric corrosion resistant steel, as determined in accordance with ASTM G101, shall be 6.0.

1. All members of the vertical trusses (top and bottom chords, verticals, and diagonals) shall be fabricated from square and/or rectangular structural steel tubing. Other structural members and bracing shall be fabricated from structural steel shapes or square and rectangular structural steel tubing.

2. All structural shapes, plates, tubes and bars shall have a minimum thickness of 5/16".

3. Minimum thickness of non-structural tubular members shall be 1/4".

4. Field splices shall be bolted with high strength AASHTO M164 (ASTM A325) or AASHTO M253 (ASTM A490) bolts; Type III bolts are required for "Weathering Steel" bridges.

5. All Welding shall be in accordance with the latest edition of AASHTO/AWS D1.5 Bridge Welding Code.

6. All Welding of structural steel tubular members shall be in accordance with the latest edition on ANSI/AWS D1.1 Structural Welding Code.

7. Beveled steel slide plates shall be provided and installed over deck expansion points at each end of the bridge between the deck and the abutment.

8. Bridge bearings shall consist of a steel setting or slide plate placed on the abutment or grout pad. The bridge bearing plate which is welded to the bridge structure shall bear on this setting plate. One end of the bridge will be fixed by fully tightening the nuts on the anchor bolts at that end. The opposite end will have finger tight only nuts to allow movement under thermal expansion or contraction. Bearings shall provide adequate attachment of the superstructure to the substructure to resist uplift and shall be fabricated to accommodate the difference in elevation between abutments. Provisions shall be made to accommodate movement resulting from variation in temperature as require for span length. Bearings shall be designed, fabricated and supplied by the bridge manufacturer.

1. The contractor shall provide and install the anchor bolts in accordance with the manufacturer's anchor bolt spacing dimensions. Information as to bridge support reactions and anchor bolt locations will be furnished by the bridge manufacturer after receipt of order and after the bridge design is complete.

2.4 Pultruded Fiberglass Deck

A. Pultruded fiberglass decking shall conform to the following:

1. The Pultruded deck shall be fabricated from bearing bars and cross rods manufactured by the pultrusion process. The glass fiber reinforcement for the bearing bars shall be a core of continuous glass strand rovings wrapped with continuous strand glass mat. A synthetic surface veil fabric with an ultraviolet inhibitor shall encase the glass reinforcement..

2. Individual I-Bars shall be supported by a 3-piece cross rod system. Distance between I-Bars shall not exceed ¼ inch in accordance with the Americans with Disabilities Act (ADA), and the current ADA Standards for Accessible Design, and shall be oriented perpendicular to the supporting stringers. Decking shall be grey in color.

3. Pultruded fiberglass decking products shall be manufactured and fabricated in the USA. Manufacturer shall provide a written Certificate of Compliance.

NOT FOR BID

3. Fiberglass grating shall be made from a chemical resistant, fire retardant polyester, or vinyl ester resin system to meet the flame spread rating of 25 or less in accordance with ASTM E-84 testing, the flammability characteristics of UL 94 V0 and satisfies the self-extinguishing requirements of ASTM D-635. UV inhibitors are added to the resin to reduce UV attack.

4. Decking shall be supplied that meet or exceed the Static Coefficient of Friction for both Neolite and leather shoes in accordance with ASTM Test Method C1028-89.

	FORCE IN POUNDS	
SHOE MATERIAL	DRY	WET
Neolite	0.73	0.69
Leather	0.55	0.79

NOT FOR BID

2.5 ENGINEERING

1. The top chord, truss verticals, and floor beams shall be designed for lateral wind loads and for any loads required to provide top chord stability; however, in no case shall the load be less than 50 pounds per lineal foot or a 200 pound point load, whichever produces greater stresses, applied in any direction at any point along the top chord or at the top of the safety system (42" or 54" above deck level), if higher than the top chord.

2. When the collection of water inside a structural tube is a possibility, either during construction or during service, the tube shall be provided with a drain hole at its lowest point to let water out.

2.6 DESIGN LIMITATIONS

A. Deflection

1. Vertical Deflection of the main trusses due to service pedestrian live load shall not exceed 1/400 of the span.

2. The vertical deflection of cantilever spans of the structure due to service pedestrian live load shall not exceed 1/300 of the cantilever arm length.

3. The deflection of the floor system members (floor beams and stringers) due to service pedestrian live load shall not exceed 1/360 of their respective spans.

4. The service pedestrian live load shall be 85 PSF, reduced in accordance with Section 3.1.2.1, but should in no case be less than 65 PSF for deflection checks.

5. Deflection limits due to occasional vehicular traffic shall not be considered.

6. The horizontal deflection of the structure due to lateral wind loads shall not exceed 1/500 of the span under an 85 MPH (25 PSF) wind load

NOT FOR BID

PART 3 – EXECUTION

3.2 PULTRUDED FIBERGLASS DECK ATTACHMENT

1. At time of installation, deck panels are to be placed with a 1/8 inch to 1/4 inch gap.

2. Floor panels shall be attached with corrosion resistant metal clips with at least two fasteners where panels cross supporting members.

3. All fasteners shall be hot-dipped galvanized, stainless steel or other approved material . Self-tapping screws or hex-head bolts, with a steel plank hold-down, are to be used at the ends of planks. Self-tapping screws or carriage bolts are to be used as interior connection fasteners when required. Power actuated fasteners will not be allowed.

4. Panels are not to be drilled for installation of bolts and/or screws.

5. NOTE: Attachments at the ends of the planks may be modified as required when obstructions, such as interior safety system elements, prevent installation of the specified hold-down system.

NOT FOR BID

3.3 DELIVERY AND ERECTION

A. The manufacturer will provide detailed, written instruction in the proper lifting procedures and splicing procedures (if required). The method and sequence of erection shall be the responsibility of others.

B. The bridge manufacturer shall provide written inspection and maintenance procedures to be followed by the bridge owner.

C. The bridge manufacturer shall provide manufacturers cut sheets for deck materials.

END OF SECTION 132950

PROJECT MANUAL

TRI-VALLEY TRAIL, PHASE II
at
WHITE CLAY CREEK STATE PARK

SMITH MILL ROAD
NEWARK, DELAWARE 19711

for

Department of Natural Resources and Environmental Control

Division of Parks and Recreation

89 Kings Highway
Dover, DE 19901

DNREC Project: WCCSP-07A

NOT FOR BID

Architect/Engineer
Century Engineering, Inc.
4134 North DuPont Hwy.
Dover, DE 19901

Final Construction Plans
JUNE 2018

(THIS PAGE INTENTIONALLY LEFT BLANK)

NOT FOR BID

Specifications for this project are arranged in accordance with the Construction Specification Institute numbering system and format. Section numbering is discontinuous and all numbers not appearing in the Table of Contents are not used for this Project.

DOCUMENTS BOUND HEREWITH

NOT FOR BID

Division	Section Title	Pages
SERIES 0 - PROCUREMENT AND CONTRACT REQUIREMENTS		
00 01 10	TABLE OF CONTENTS	
00 01 15	LIST OF DRAWINGS	2
00 11 16	INVITATION TO BID	2
00 21 13	INSTRUCTIONS TO BIDDERS	14
00 41 13	BID FORM	6
00 43 13	BID BOND	2
00 52 13	STANDARD FORM OF AGREEMENT BETWEEN OWNER AND CONTRACTOR A101-2007	2
00 54 13	SUPPLEMENTARY CONDITIONS TO THE CONTRACT	9
00 61 13.13	PERFORMANCE BOND	2
00 61 13.16	PAYMENT BOND	2
00 62 76	APPLICATION FOR PAYMENT (SAMPLE AIA G702 & G703)	2
00 6277	BY AMERICA	2
00 72 13	GENERAL CONDITIONS TO THE CONTRACT (AIA A201)	2
00 73 13	SUPPLEMENTARY GENERAL CONDITIONS	10
00 73 46	DELAWARE DEPARTMENT OF LABOR PREVAILING WAGE RATES	2
00 81 13	GENERAL REQUIREMENTS	16
00 81 14	DRUG TESTING FORMS	2
DIVISION 1 - GENERAL REQUIREMENTS		
01 10 00	SUMMARY	6
01 14 00	WORK RESTRICTIONS	2
01 22 00	UNIT PRICES	4
01 24 00	PERMITS	2
01 25 00	CONTRACT MODIFICATION PROCEDURES	2
01 29 00	PAYMENT PROCEDURES	4
01 31 00	PROJECT MANAGEMENT AND COORDINATION	4
01 31 50	FIELD ENGINEERING	2
01 32 00	CONSTRUCTION PROGRESS DOCUMENTATION	4
01 32 23	PHOTOGRAPHIC DOCUMENTATION	2
01 33 00	SUBMITTAL PROCEDURES	10
01 40 00	QUALITY REQUIREMENTS	8
01 42 00	REFERENCE STANDARDS AND DEFINITIONS	4
01 50 00	TEMPORARY FACILITIES AND CONTROLS	4
01 56 00	ENVIRONMENTAL PROTECTION	4
01 56 39	TEMPORARY TREE AND PLANT PROTECTION	3
01 60 00	PRODUCT REQUIREMENTS	10
01 73 00	EXECUTION REQUIREMENTS	6
01 73 29	CUTTING AND PATCHING	4
01 74 19	CONSTRUCTION WASTE MANAGEMENT AND DISPOSAL	6

01 77 00 CLOSEOUT PROCEDURES 6
01 78 39 PROJECT RECORD DOCUMENTS 4

DIVISION 2 – EXISTING CONDITIONS

DIVISION 3 - CONCRETE

DIVISION 4 - MASONRY

DIVISION 5 - METALS
05 12 00 STRUCTURAL STEEL FRAMING 6
05 52 13 PIPE AND TUBE RAILING 4

DIVISION 6 – WOOD, PLASTICS AND COMPOSITES

DIVISION 7 - THERMAL AND MOISTURE PROTECTION

DIVISION 8 - OPENINGS

DIVISION 9 - FINISHES

DIVISION 10 - SPECIALTIES

DIVISION 11 - EQUIPMENT

DIVISION 12 - FURNISHINGS

DIVISION 13 - SPECIAL CONSTRUCTION
13 24 50 HELICAL ANCHOR FOUNDATIONS 10
13 29 50 PREFABRICATED PEDESTRIAN BRIDGE 8

DIVISION 14 - CONVEYING SYSTEMS

DIVISION 22 - PLUMBING

DIVISION 23 – HEATING, VENTILATING AND AIR CONDITIONING

NOT FOR BID

NOT FOR BID

DIVISION 26 – ELECTRICAL

DIVISION 27 – COMMUNICATIONS

DIVISION 28 – ELECTRONIC SAFETY AND SECURITY

DIVISION 31 – EARTHWORK
31 10 00 SITE CLEARING 4
31 50 00 EARTH MOVING 10

DIVISION 32 – EXTERIOR IMPROVEMENTS
32 92 00 TURF AND GRASSES 6

DIVISION 33 - UTILITIES

ADDITIONAL ITEMS
40 10 02 BITUMINOUS CONCRETE, SUPERPAVE TYPE C AND TYPE B 8
60 20 03,
60 30 25 PCC BRIDGE FOOTINGS AND ABUTMENTS 2
70 50 07 TRUNCATED DOMES 2

END OF TABLE OF CONTENTS

(THIS PAGE INTENTIONALLY LEFT BLANK)

NOT FOR BID

SECTION 00 01 15 - LIST OF DRAWINGS

Sheet No.	Title
C1.0	Cover Sheet
C1.1	Project Notes & Legend
C1.2	Project Scope
C1.3	Site Control Plan
C1.4	Overall Sheet Layout
C2.1 – C2.3	Demolition Plan
C3.1	Typical Sections
C4.1 – C4.2	Horizontal Alignment
C5.1 – C5.8	Site Plan and Profile
C6.1	Entrance Plan
C7.1 – C7.2	Details
S1.1	Bridge Plan, Elevation & Section
S1.2	South Bridge Approach
S1.3	North Bridge Approach
S1.4 – S1.7	Structural Details
S1.8	Boring Logs
SWM1.0	Stormwater Management Cover Sheet
SWM2.0	Overall Construction Site Stormwater Management Plan
SWM2.1 – SWM2.3	Construction Site Stormwater Management Plan 1 thru 3
SWM3.0 – SWM3.2	Construction Site Details and Notes
SWM4.0	Overall Post Construction Stormwater Management Sheet Layout
SWM4.1 – SWM4.4	Post Construction Stormwater Management Plan, Filter Strip #1 thru #4
SWM5.0	Contributing Drainage Area Details & Notes
SWM6.1	Pre-Limit of Disturbance Drainage Area Plan 1
SWM6.2	Pre-Limit of Disturbance Drainage Area Plan 2
SWM7.1	Post-Limit of Disturbance Drainage Area Plan 1
SWM7.2	Post-Limit of Disturbance Drainage Area Plan 2

NOT FOR BID

END OF SECTION 00 01 15

(THIS PAGE INTENTIONALLY LEFT BLANK)

NOT FOR BID

SECTION 00 11 16 – INVITATION TO BID

The Department of Natural Resources and Environmental Control, Division of Parks and Recreation, Office of Design and Development will receive sealed bids in the Auditorium, DNREC Building, 89 Kings Highway, Dover Delaware 19901, until 12:00 p.m. local time on Thursday, July 26, 2018, at which time they will be publicly opened and read aloud in the Auditorium. Bidder bears the risk of late delivery. Any bid received after the stated time will be returned unopened.

Project involves Construction of a new, 5,965+/- long, 8-foot wide asphalt multi-use trail and bridge.

A **MANDATORY** Pre-Bid Meeting will be held at 10:00 a.m., July 12, 2018, at the Judge Morris Estate – 76 Polly Drummond Hill Road, Newark, Delaware 19711 for the purpose of establishing the listing of subcontractors and to answer questions. Representatives of each party to any Joint Venture must attend this meeting. **ATTENDANCE OF THIS MEETING IS A PREREQUISITE FOR BIDDING ON THIS CONTRACT.**

Sealed bids shall be addressed to the following address. The outer envelope should clearly indicate **"DNREC CONTRACT NO. WCCSP-07A SEALED BID – DO NOT OPEN".**

Dept. of Natural Resources & Environmental Control
Division of Parks and Recreation
Office of Design and Development
89 Kings Highway, Dover DE 19901
Attn: Cindy A. Todd, RLA. Phone Number: 302-739-9210

Contract documents may be obtained at the office of the Division of Parks and Recreation upon receipt of $25.00 for each disc. This payment is non-refundable and the documents need not be returned. Checks are to be made payable to Division of Parks and Recreation.

Bidding documents will be available for review at the following locations: Division of Parks and Recreation; Delaware Contractors Association and Associated Builders and Contractors.

Bidders will not be subject to discrimination on the basis of race, creed, color, sex, sexual orientation, gender identity or national origin in consideration of this award, and Minority Business Enterprises, Disadvantaged Business Enterprises, Women-Owned Business Enterprises and Veteran-Owned Business Enterprises will be afforded full opportunity to submit bids on this contract. Each bid must be accompanied by a bid security equivalent to ten percent of the bid amount and all additive alternates. The successful bidder must post a performance bond and payment bond in a sum equal to 100 percent of the contract price upon execution of the contract. The Owner reserves the right to reject any or all bids and to waive any informalities therein. The Owner may extend the time and place for the opening of the bids from that described in the advertisement, with not less than two calendar days notice by certified delivery, facsimile machine or other electronic means to those bidders receiving plans.

Shawn M. Garvin, Secretary

END OF SECTION 00 01 15

NOT FOR BID

(THIS PAGE INTENTIONALLY LEFT BLANK)

NOT FOR BID

SECTION 00 21 13 - INSTRUCTIONS TO BIDDERS

NOT FOR BID

TABLE OF ARTICLES

1. DEFINITIONS

2. BIDDER'S REPRESENTATION

3. BIDDING DOCUMENTS

4. BIDDING PROCEDURES

5. CONSIDERATION OF BIDS

6. POST-BID INFORMATION

7. PERFORMANCE BOND AND PAYMENT BOND

8. FORM OF AGREEMENT BETWEEN OWNER AND CONTRACTOR

NOT FOR BID

ARTICLE 1: GENERAL

1.1 DEFINITIONS

1.1.1 Whenever the following terms are used, their intent and meaning shall be interpreted as follows:

1.2 STATE: The State of Delaware.

1.3 AGENCY: Contracting State Agency as noted on cover sheet.

1.4 DESIGNATED OFFICIAL: The agent authorized to act for the Agency.

1.5 BIDDING DOCUMENTS: Bidding Documents include the Bidding Requirements and the proposed Contract Documents. The Bidding Requirements consist of the Advertisement for Bid, Invitation to Bid, Instructions to Bidders, Supplementary Instructions to Bidders (if any), General Conditions, Supplementary General Conditions, General Requirements, Special Provisions (if any), the Bid Form (including the Non-collusion Statement), and other sample bidding and contract forms. The proposed Contract Documents consist of the form of Agreement between the Owner and Contractor, as well as the Drawings, Specifications (Project Manual) and all Addenda issued prior to execution of the Contract.

1.6 CONTRACT DOCUMENTS: The Contract Documents consist of the, Instructions to Bidders, Supplementary Instructions to Bidders (if any), General Conditions, Supplementary General Conditions, General Requirements, Special Provisions (if any), the form of agreement between the Owner and the Contractor, Drawings (if any), Specifications (Project Manual), and all addenda.

1.7 AGREEMENT: The form of the Agreement shall be AIA Document A101, Standard Form of Agreement between Owner and Contractor where the basis of payment is a STIPULATED SUM. In the case of conflict between the instructions contained therein and the General Requirements herein, these General Requirements shall prevail.

1.8 GENERAL REQUIREMENTS (or CONDITIONS): General Requirements (or conditions) are instructions pertaining to ifications.

5.4.4 The Agency shall have the right to accept Alternates in any order or combination, and to determine the low Bidder on the bastructions to bidders.

1.9 SPECIAL PROVISIONS: Special Provisions are specific conditions or requirements peculiar to the bidding documents and to the contract under consideration and are supplemental to the General Requirements. Should the Special Provisions conflict with the General Requirements, the Special Provisions shall prevail.

1.10 ADDENDA: Written or graphic instruments issued by the Owner/Architect prior to the execution of the contract which modify or interpret the Bidding Documents by additions, deletions, clarifications or corrections.

1.11 BIDDER OR VENDOR: A person or entity who formally submits a Bid for the material or Work contemplated, acting directly or through a duly authorized representative who meets the requirements set forth in the Bidding Documents.

1.12 SUB-BIDDER: A person or entity who submits a Bid to a Bidder for materials or labor, or both for a portion of the Work.

1.13 BID: A complete and properly executed proposal to do the Work for the sums stipulated therein, submitted in accordance with the Bidding Documents.

1.14 BASE BID: The sum stated in the Bid for which the Bidder offers to perform the Work described in the Bidding Documents as the base, to which Work may be added or from which Work may be deleted for sums stated in Alternate Bids (if any are required to be stated in the bid).

1.15 ALTERNATE BID (or ALTERNATE): An amount stated in the Bid, where applicable, to be added to or deducted from the amount of the Base Bid if the corresponding change in the Work, as described in the Bidding Documents is accepted.

1.16 UNIT PRICE: An amount stated in the Bid, where applicable, as a price per unit of measurement for materials, equipment or services or a portion of the Work as described in the Bidding Documents.

1.17 SURETY: The corporate body which is bound with and for the Contract, or which is liable, and which engages to be responsible for the Contractor's payments of all debts pertaining to and for his acceptable performance of the Work for which he has contracted.

1.18 BIDDER'S DEPOSIT: The security designated in the Bid to be furnished by the Bidder as a guaranty of good faith to enter into a contract with the Agency if the Work to be performed or the material or equipment to be furnished is awarded to him.

1.19 CONTRACT: The written agreement covering the furnishing and delivery of material or work to be performed.

1.20 CONTRACTOR: Any individual, firm or corporation with whom a contract is made by the Agency.

1.21 SUBCONTRACTOR: An individual, partnership or corporation which has a direct contract with a contractor to furnish labor and materials at the job site, or to perform construction labor and furnish material in connection with such labor at the job site.

1.22 CONTRACT BOND: The approved form of security furnished by the contractor and his surety as a guaranty of good faith on the part of the contractor to execute the work in accordance with the terms of the contract.

NOT FOR BID

NOT FOR BID

ARTICLE 2: BIDDER'S REPRESENTATIONS

2.1 PRE-BID MEETING

2.1.1 A pre-bid meeting for this project will be held at the time and place designated. Attendance at this meeting is a pre-requisite for submitting a Bid, unless this requirement is specifically waived elsewhere in the Bid Documents.

2.2 By submitting a Bid, the Bidder represents that:

2.2.1 The Bidder has read and understands the Bidding Documents and that the Bid is made in accordance therewith.

2.2.2 The Bidder has visited the site, become familiar with existing conditions under which the Work is to be performed and has correlated the Bidder's his personal observations with the requirements of the proposed Contract Documents.

2.2.3 The Bid is based upon the materials, equipment, and systems required by the Bidding Documents without exception.

2.3 JOINT VENTURE REQUIREMENTS

2.3.1 For Public Works Contracts, each Joint Venturer shall be qualified and capable to complete the Work with their own forces.

2.3.2 Included with the Bid submission, and as a requirement to bid, a copy of the executed Joint Venture Agreement shall be submitted and signed by all Joint Venturers involved.

2.3.3 All required Bid Bonds, Performance Bonds, Material and Labor Payment Bonds must be executed by both Joint Venturers and be placed in both of their names.

2.3.4 All required insurance certificates shall name both Joint Venturers.

2.3.5 Both Joint Venturers shall sign the Bid Form and shall submit a copy of a valid Delaware Business License with their Bid.

2.3.6 Both Joint Venturers shall include their Federal E.I. Number with the Bid.

2.3.7 In the event of a mandatory Pre-bid Meeting, each Joint Venturer shall have a representative in attendance.

2.3.8 Due to exceptional circumstances and for good cause shown, one or more of these provisions may be waived at the discretion of the State.

2.4 ASSIGNMENT OF ANTITRUST CLAIMS

2.4.1 As consideration for the award and execution by the Owner of this contract, the Contractor hereby grants, conveys, sells, assigns and transfers to the State of Delaware all of its right, title and interests in and to all known or unknown causes of action it presently has or may now or

hereafter acquire under the antitrust laws of the United States and the State of Delaware, relating to the particular goods or services purchased or acquired by the Owner pursuant to this contract.

NOT FOR BID

ARTICLE 3: BIDDING DOCUMENTS

3.1 COPIES OF BID DOCUMENTS

3.1.1 Bidders may obtain complete sets of the Bidding Documents from the Architectural/Engineering firm designated in the Advertisement or Invitation to Bid in the number and for the deposit sum, if any, stated therein.

3.1.2 Bidders shall use complete sets of Bidding Documents for preparation of Bids. The issuing Agency nor the Architect assume no responsibility for errors or misinterpretations resulting from the use of incomplete sets of Bidding Documents.

3.1.3 Any errors, inconsistencies or omissions discovered shall be reported to the Architect immediately.

3.1.4 The Agency and Architect may make copies of the Bidding Documents available on the above terms for the purpose of obtaining Bids on the Work. No license or grant of use is conferred by issuance of copies of the Bidding Documents.

3.2 INTERPRETATION OR CORRECTION OF BIDDING DOCUMENTS

3.2.1 The Bidder shall carefully study and compare the Bidding Documents with each other, and with other work being bid concurrently or presently under construction to the extent that it relates to the Work for which the Bid is submitted, shall examine the site and local conditions, and shall report any errors, inconsistencies, or ambiguities discovered to the Architect.

3.2.2 Bidders or Sub-bidders requiring clarification or interpretation of the Bidding Documents shall make a written request to the Architect at least seven days prior to the date for receipt of Bids. Interpretations, corrections and changes to the Bidding Documents will be made by written Addendum. Interpretations, corrections, or changes to the Bidding Documents made in any other manner shall not be binding.

3.2.3 The apparent silence of the specifications as to any detail, or the apparent omission from it of detailed description concerning any point, shall be regarded as meaning that only the best commercial practice is to prevail and only material and workmanship of the first quality are to be used. Proof of specification compliance will be the responsibility of the Bidder.

3.2.4 Unless otherwise provided in the Contract Documents, the Contractor shall provide and pay for all permits, labor, materials, equipment, tools, construction equipment and machinery, water, heat, utilities, transportation, and other facilities and services necessary for the proper execution and completion of the Work.

3.2.5 The Owner will bear the costs for all impact and user fees associated with the project.

3.3 SUBSTITUTIONS

3.3.1 The materials, products and equipment described in the Bidding Documents establish a standard of quality, required function, dimension, and appearance to be met by any proposed substitution. The specification of a particular manufacturer or model number is not intended to be proprietary in any way. Substitutions of products for those named will be considered, providing that the Vendor certifies that the function, quality, and performance characteristics of the material offered is equal or superior to that specified. It shall be the Bidder's responsibility to assure that the proposed substitution will not affect the intent of the design, and to make any installation modifications required to accommodate the substitution.

3.3.2 Requests for substitutions shall be made in writing to the Architect at least ten days prior to the date of the Bid Opening. Such requests shall include a complete description of the proposed substitution, drawings, performance and test data, explanation of required installation modifications due the substitution, and any other information necessary for an evaluation. The burden of proof of the merit of the proposed substitution is upon the proposer. The Architect's decision of approval or disapproval shall be final. The Architect is to notify Owner prior to any approvals.

3.3.3 If the Architect approves a substitution prior to the receipt of Bids, such approval shall be set forth in an Addendum. Approvals made in any other manner shall not be binding.

3.3.4 The Architect shall have no obligation to consider any substitutions after the Contract award.

3.4 ADDENDA

3.4.1 Addenda will be mailed or delivered to all who are known by the Architect to have received a complete set of the Bidding Documents.

3.4.2 Copies of Addenda will be made available for inspection wherever Bidding Documents are on file for that purpose.

3.4.3 No Addenda will be issued later than 4 days prior to the date for receipt of Bids except an Addendum withdrawing the request for Bids or one which extends the time or changes the location for the opening of bids.

3.4.4 Each bidder shall ascertain prior to submitting his Bid that they have received all Addenda issued, and shall acknowledge their receipt in their Bid in the appropriate space. Not acknowledging an issued Addenda could be grounds for determining a bid to be non-responsive.

ARTICLE 4: BIDDING PROCEDURES

4.1 PREPARATION OF BIDS

4.1.1 Submit the bids on the Bid Forms included with the Bidding Documents.

4.1.2 Submit the original Bid Form for each bid. Bid Forms may be removed from the project manual for this purpose.

NOT FOR BID

NOT FOR BID

4.1.3 Execute all blanks on the Bid Form in a non-erasable medium (typewriter or manually in ink).

4.1.4 Where so indicated by the makeup on the Bid Form, express sums in both words and figures, in case of discrepancy between the two, the written amount shall govern.

4.1.5 Interlineations, alterations or erasures must be initialed by the signer of the Bid.

4.1.6 BID ALL REQUESTED ALTERNATES AND UNIT PRICES, IF ANY. If there is no change in the Base Bid for an Alternate, enter "No Change". The Contractor is responsible for verifying that they have received all addenda issued during the bidding period. Work required by Addenda shall automatically become part of the Contract.

4.1.7 Make no additional stipulations on the Bid Form and do not qualify the Bid in any other manner.

4.1.8 Each copy of the Bid shall include the legal name of the Bidder and a statement whether the Bidder is a sole proprietor, a partnership, a corporation, or any legal entity, and each copy shall be signed by the person or persons legally authorized to bind the Bidder to a contract. A Bid by a corporation shall further give the state of incorporation and have the corporate seal affixed. A Bid submitted by an agent shall have a current Power of Attorney attached, certifying agent's authority to bind the Bidder.

4.1.9 Bidder shall complete the Non-Collusion Statement form included with the Bid Forms and include it with their Bid.

4.1.10 In the construction of all Public Works projects for the State of Delaware or any agency thereof, preference in employment of laborers, workers or mechanics shall be given to bona fide legal citizens of the State who have established citizenship by residence of at least 90 days in the State.

4.1.11 Each bidder shall include in their bid a copy of a valid Delaware Business License.'

4.1.12 Each bidder shall include signed Affidavit(s) for the Bidder and each listed Subcontractor certifying compliance with OMB Regulation 4104- "Regulations for the Drug Testing of Contractor and Subcontractor Employees Working on "Large Public Works Projects." "Large Public Works" is based upon the current threshold required for bidding Public Works as set by the Purchasing and Contracting Advisory Council.

4.2 BID SECURITY

4.2.1 All bids shall be accompanied by a deposit of either a good and sufficient bond to the agency for the benefit of the agency, with corporate surety authorized to do business in this State, the form of the bond and the surety to be approved by the agency, or a security of the bidder assigned to the agency, for a sum equal to at least 10% of the bid plus all add alternates, or in lieu of the bid bond a security deposit in the form of a certified check, bank treasurer's check, cashier's check, money order, or other prior approved secured deposit assigned to the State. The bid bond need not be for a specific sum, but may be stated to be for a sum equal to 10% of the bid plus all add alternates to which it relates and not to exceed a certain stated sum, if

said sum is equal to at least 10% of the bid. The Bid Bond form used shall be the standard OMB form (attached).

4.2.2 The Agency has the right to retain the bid security of Bidders to whom an award is being considered until either a formal contract has been executed and bonds have been furnished or the specified time has elapsed so the Bids may be withdrawn or all Bids have been rejected.

4.2.3 In the event of any successful Bidder refusing or neglecting to execute a formal contract and bond within 20 days of the awarding of the contract, the bid bond or security deposited by the successful bidder shall be forfeited.

4.3 SUBCONTRACTOR LIST

4.3.1 As required by Delaware Code, Title 29, section 6962(d)(10)b, each Bidder shall submit with their Bid a completed List of Sub-Contractors included with the Bid Form. NAME ONLY ONE SUBCONTRACTOR FOR EACH TRADE. A Bid will be considered non-responsive unless the completed list is included.

4.3.2 Provide the Name and Address for each listed subcontractor. Addresses by City, Town or Locality, plus State, will be acceptable.

4.3.3 It is the responsibility of the Contractor to ensure that their Subcontractors are in compliance with the provisions of this law. Also, if a Contractor elects to list themselves as a Subcontractor for any category, they must specifically name themselves on the Bid Form and be able to document their capability to act as Subcontractor in that category in accordance with this law.

4.4 EQUALITY OF EMPLOYMENT OPPORTUNITY ON PUBLIC WORKS

4.4.1 During the performance of this contract, the contractor agrees as follows:

A. The Contractor will not discriminate against any employee or applicant for employment because of race, creed, sex, color, sexual orientation, gender identity or national origin. The Contractor will take affirmative action to ensure the applicants are employed, and that employees are treated during employment, without regard to their race, creed, sex, color, sexual orientation, gender identity or national origin. Such action shall include, but not be limited to, the following: Employment, upgrading, demotion or transfer; recruitment or recruitment advertising; layoff or termination; rates of pay or other forms of compensation; and selection for training, including apprenticeship. The Contractor agrees to post in conspicuous places available to employees and applicants for employment notices to be provided by the contracting agency setting forth this nondiscrimination clause.

B. The Contractor will, in all solicitations or advertisements for employees placed by or on behalf of the Contractor, state that all qualified applicants will receive consideration for employment without regard to race, creed, sex, color, sexual orientation, gender identity or national origin."

NOT FOR BID

4.5 PREVAILING WAGE REQUIREMENT

4.5.1 Wage Provisions: For renovation and new construction projects whose costs exceed the thresholds contained in Delaware Code, Title 29, Section 6960, the minimum wage rates for various classes of laborers and mechanics shall be as determined by the Department of Labor, Division of Industrial Affairs of the State of Delaware.

4.5.2 The employer shall pay all mechanics and labors employed directly upon the site of work, unconditionally and not less often than once a week and without subsequent deduction or rebate on any account, the full amounts accrued at time of payment, computed at wage rates not less than those stated in the specifications, regardless of any contractual relationship which may be alleged to exist between the employer and such laborers and mechanics.

4.5.3 The scale of the wages to be paid shall be posted by the employer in a prominent and easily accessible place at the site of the work.

4.5.4 Every contract based upon these specifications shall contain a stipulation that sworn payroll information, as required by the Department of Labor, be furnished weekly. The Department of Labor shall keep and maintain the sworn payroll information for a period of 6 months from the last day of the work week covered by the payroll.

4.6 SUBMISSION OF BIDS

4.6.1 Enclose the Bid, the Bid Security, and any other documents required to be submitted with the Bid in a sealed opaque envelope. Address the envelope to the party receiving the Bids. Identify with the project name, project number, and the Bidder's name and address. If the Bid is sent by mail, enclose the sealed envelope in a separate mailing envelope with the notation "BID ENCLOSED" on the face thereof. The State is not responsible for the opening of bids prior to bid opening date and time that are not properly marked.

4.6.2 Deposit Bids at the designated location prior to the time and date for receipt of bids indicated in the Advertisement for Bids. Bids received after the time and date for receipt of bids will be marked “LATE BID” and returned.

4.6.3 Bidder assumes full responsibility for timely delivery at location designated for receipt of bids.

4.6.4 Oral, telephonic or telegraphic bids are invalid and will not receive consideration.

4.6.5 Withdrawn Bids may be resubmitted up to the date and time designated for the receipt of Bids, provided that they are then fully in compliance with these Instructions to Bidders.

NOT FOR BID

4.7 MODIFICATION OR WITHDRAW OF BIDS

4.7.1 Prior to the closing date for receipt of Bids, a Bidder may withdraw a Bid by personal request and by showing proper identification to the Architect. A request for withdraw by letter or fax, if the Architect is notified in writing prior to receipt of fax, is acceptable. A fax directing a modification in the bid price will render the Bid informal, causing it to be ineligible for consideration of award. Telephone directives for modification of the bid price shall not be permitted and will have no bearing on the submitted proposal in any manner.

4.7.2 Bidders submitting Bids that are late shall be notified as soon as practicable and the bid shall be returned.

4.7.3 A Bid may not be modified, withdrawn or canceled by the Bidder during a thirty (30) day period following the time and date designated for the receipt and opening of Bids, and Bidder so agrees in submitting their Bid. Bids shall be binding for 30 days after the date of the Bid opening.

ARTICLE 5: CONSIDERATION OF BIDS

5.1 OPENING/PRESENTATION OF BIDS

5.1.1 Unless otherwise stated, Bids received on time will be publicly opened and will be read aloud. An abstract of the Bids will be made available to Bidders.

5.1.2 The Agency shall have the right to reject any and all Bids. A Bid not accompanied by a required Bid Security or by other data required by the Bidding Documents, or a Bid which is in any way incomplete or irregular is subject to rejection.

5.1.3 If the Bids are rejected, it will be done within thirty (30) calendar day of the Bid opening.

5.2 COMPARISON OF BIDS

5.2.1 After the Bids have been opened and read, the bid prices will be compared and the result of such comparisons will be made available to the public. Comparisons of the Bids may be based on the Base Bid plus desired Alternates. The Agency shall have the right to accept Alternates in any order or combination.

5.2.2 The Agency reserves the right to waive technicalities, to reject any or all Bids, or any portion thereof, to advertise for new Bids, to proceed to do the Work otherwise, or to abandon the Work, if in the judgment of the Agency or its agent(s), it is in the best interest of the State.

5.2.3 An increase or decrease in the quantity for any item is not sufficient grounds for an increase or decrease in the Unit Price.

5.2.4 The prices quoted are to be those for which the material will be furnished F.O.B. Job Site and include all charges that may be imposed during the period of the Contract.

NOT FOR BID

5.2.5 No qualifying letter or statements in or attached to the Bid, or separate discounts will be considered in determining the low Bid except as may be otherwise herein noted. Cash or separate discounts should be computed and incorporated into Unit Bid Price(s).

5.3 DISQUALIFICATION OF BIDDERS

5.3.1 An agency shall determine that each Bidder on any Public Works Contract is responsible before awarding the Contract. Factors to be considered in determining the responsibility of a Bidder include:

A. The Bidder's financial, physical, personnel or other resources including Subcontracts;

B. The Bidder's record of performance on past public or private construction projects, including, but not limited to, defaults and/or final adjudication or admission of violations of the Prevailing Wage Laws in Delaware or any other state;

C. The Bidder's written safety plan;

D. Whether the Bidder is qualified legally to contract with the State;

E. Whether the Bidder supplied all necessary information concerning its responsibility; and,

F. Any other specific criteria for a particular procurement, which an agency may establish; provided however, that, the criteria be set forth in the Invitation to Bid and is otherwise in conformity with State and/or Federal law.

5.3.2 If an agency determines that a Bidder is nonresponsive and/or nonresponsible, the determination shall be in writing and set forth the basis for the determination. A copy of the determination shall be sent to the affected Bidder within five (5) working days of said determination.

5.3.3 In addition, any one or more of the following causes may be considered as sufficient for the disqualification of a Bidder and the rejection of their Bid or Bids.

5.3.3.1 More than one Bid for the same Contract from an individual, firm or corporation under the same or different names.

5.3.3.2 Evidence of collusion among Bidders.

5.3.3.3 Unsatisfactory performance record as evidenced by past experience.

5.3.3.4 If the Unit Prices are obviously unbalanced either in excess or below reasonable cost analysis values.

5.3.3.5 If there are any unauthorized additions, interlineation, conditional or alternate bids or irregularities of any kind which may tend to make the Bid incomplete, indefinite or ambiguous as to its meaning.

NOT FOR BID

5.3.3.6 If the Bid is not accompanied by the required Bid Security and other data required by the Bidding Documents.

5.3.3.7 If any exceptions or qualifications of the Bid are noted on the Bid Form.

5.4 ACCEPTANCE OF BID AND AWARD OF CONTRACT

5.4.1 A formal Contract shall be executed with the successful Bidder within twenty (20) calendar days after the award of the Contract.

5.4.2 Per Section 6962(d)(13) a., Title 29 Delaware Code, "The contracting agency shall award any public works contract within thirty (30) days of the bid opening to the lowest responsive and responsible Bidder, unless the Agency elects to award on the basis of best value, in which case the election to award on the basis of best value shall be stated in the Invitation To Bid."

5.4.3 Each Bid on any Public Works Contract must be deemed responsive by the Agency to be considered for award. A responsive Bid shall conform in all material respects to the requirements and criteria set forth in the Contract Documents and specifications.

5.4.4 The Agency shall have the right to accept Alternates in any order or combination, and to determine the low Bidder on the basis of the sum of the Base Bid, plus accepted Alternates.

5.4.5 The successful Bidder shall execute a formal contract, submit the required Insurance Certificate, and furnish good and sufficient bonds, unless specifically waived in the General Requirements, in accordance with the General Requirement, within twenty (20) days of official notice of contract award. The successful Bidder shall provide two business days prior to contract execution, copies of the Employee Drug Testing Program for the Bidder and all listed Subcontractors. Bonds shall be for the benefit of the Agency with surety in the amount of 100% of the total contract award. Said Bonds shall be conditioned upon the faithful performance of the contract. Bonds shall remain in affect for period of one year after the date of substantial completion.

5.4.6 If the successful Bidder fails to execute the required Contract,Bond and all required information, as aforesaid, within twenty (20) calendar days after the date of official Notice of the Award of the Contract, their Bid guaranty shall immediately be taken and become the property of the State for the benefit of the Agency as liquidated damages, and not as a forfeiture or as a penalty. Award will then be made to the next lowest qualified Bidder of the Work or readvertised, as the Agency may decide.

5.4.7 Each bidder shall supply with its bid its taxpayer identification number (i.e., federal employer identification number or social security number) and a copy of its Delaware business license, and should the vendor be awarded a contract, such vendor shall provide to the agency the taxpayer identification license numbers of such subcontractors. Such numbers shall be provided on the later of the date on which such subcontractor is required to be identified or the time the contract is executed. The successful Bidder shall provide to the agency to which it is contracting, within 30 days of entering into such public works contract, copies of all Delaware Business licenses of subcontractors and/or independent contractors that will

NOT FOR BID

perform work for such public works contract. However, if a subcontractor or independent contractor is hired or contracted more than 20 days after the Bidder entered the public works contract the Delaware Business license of such subcontractor or independent contractor shall be provided to the agency within 10 days of being contracted or hired.

5.4.8 The Bid Security shall be returned to the successful Bidder upon the execution of the formal contract. The Bid Securities of unsuccessful bidders shall be returned within thirty (30) calendar days after the opening of the Bids.

NOT FOR BID

ARTICLE 6: POST-BID INFORMATION

6.1 CONTRACTOR'S QUALIFICATION STATEMENT

6.1.1 Bidders to whom award of a Contract is under consideration shall, if requested by the Agency, submit a properly executed AIA Document A305, Contractor's Qualification Statement, unless such a statement has been previously required and submitted.

6.2 BUSINESS DESIGNATION FORM

6.2.1 Successful bidder shall be required to accurately complete an Office of Management and Budget Business Designation Form for Subcontractors.

ARTICLE 7: PERFORMANCE BOND AND PAYMENT BOND

7.1 BOND REQUIREMENTS

7.1.1 The cost of furnishing the required Bonds, that are stipulated in the Bidding Documents, shall be included in the Bid.

7.1.2 If the Bidder is required by the Agency to secure a bond from other than the Bidder's usual sources, changes in cost will be adjusted as provide in the Contract Documents.

7.1.3 The Performance and Payment Bond forms used shall be the standard OMB forms (attached).

7.2 TIME OF DELIVERY AND FORM OF BONDS

7.2.1 The bonds shall be dated on or after the date of the Contract.

7.2.2 The Bidder shall require the attorney-in-fact who executes the required bonds on behalf of the surety to affix a certified and current copy of the power of attorney.

ARTICLE 8: FORM OF AGREEMENT BETWEEN AGENCY AND CONTRACTOR

8.1 Unless otherwise required in the Bidding Documents, the Agreement for the Work will be written on AIA Document A101, Standard Form of Agreement Between Owner and Contractor Where the Basis of Payment is a Stipulated Sum.

END OF INSTRUCTIONS TO BIDDERS

NOT FOR BID

TRI-VALLEY TRAIL, PHASE II
WHITE CLAY CREEK STATE PARK
DIVISION OF PARKS AND RECREATION CONTRACT NO. WCCSP-07A

BID FORM

NOT FOR BID

For Bids Due: July 26, 2018, at 12:00 a.m To: Dept. of Natural Resources and Environmental Control
Division of Parks and Recreation
Office of Design and Development
89 Kings Highway, Dover DE 19901

Name of Bidder: _____

Delaware Business License No.: _____ **Taxpayer ID No.:** _____
(A copy of Bidder's Delaware Business License must be attached to this form.)

(Other License Nos.): _____

Phone Number: ( ) _____ _____ **Fax Number: ( ) _____ _____**

The undersigned, representing that he has read and understands the Bidding Documents and that this bid is made in accordance therewith, that he has visited the site and has familiarized himself with the local conditions under which the Work is to be performed, and that his bid is based upon the materials, systems and equipment described in the Bidding Documents without exception, hereby proposes and agrees to provide all labor, materials, plant, equipment, supplies, transport and other facilities required to execute the work described by the aforesaid documents for the lump sum itemized below:

$ _____

($)

TRI-VALLEY TRAIL, PHASE II
WHITE CLAY CREEK STATE PARK
DIVISION OF PARKS AND RECREATION CONTRACT NO. WCCSP-07A

BID FORM

ALTERNATES

Alternate prices conform to applicable project specification section. Refer to specifications for a complete description of the following Alternates. An "ADD" or "DEDUCT" amount is indicated by the crossed out part that does not apply.

ALTERNATE No. 1: Helical Pile Static Load Testing

Add/Deduct: _____
($)

No. of Days to Complete Alternate 1: _____

NOT FOR BID

TRI-VALLEY TRAIL, PHASE II
WHITE CLAY CREEK STATE PARK
DIVISION OF PARKS AND RECREATION CONTRACT NO. WCCSP-07A

BID FORM

UNIT PRICES

Unit prices conform to applicable project specification section. Refer to the specifications for a complete description of the following Unit Prices:

		DEDUCT	ADD
UNIT PRICE No. 1:	Prefabricated Pedestrian Bridge (EA)	$ _____	$ _____
UNIT PRICE No. 2	Helical Screw Foundations (EA)	$ _____	$ _____
UNIT PRICE No. 3	Borrow, Type F (CY)	$ _____	$ _____
UNIT PRICE No. 4	Disposal of Excess Material (CY)	$ _____	$ _____

NOT FOR BID

TRI-VALLEY TRAIL, PHASE II
WHITE CLAY CREEK STATE PARK
DIVISION OF PARKS AND RECREATION CONTRACT NO. WCCSP-07A

BID FORM

NOT FOR BID

I/We acknowledge Addendums numbered _____ and the price(s) submitted include any cost/schedule impact they may have.

This bid shall remain valid and cannot be withdrawn for thirty (30) days from the date of opening of bids, and the undersigned shall abide by the Bid Security forfeiture provisions. Bid Security is attached to this Bid.

The Owner shall have the right to reject any or all bids, and to waive any informality or irregularity in any bid received.

This bid is based upon work being accomplished by the Sub-Contractors named on the list attached to this bid.

Should I/We be awarded this contract, I/We pledge to achieve substantial completion of all the work within _____calendar days of the Notice to Proceed.

The undersigned represents and warrants that he has complied and shall comply with all requirements of local, state, and national laws; that no legal requirement has been or shall be violated in making or accepting this bid, in awarding the contract to him or in the prosecution of the work required; that the bid is legal and firm; that he has not, directly or indirectly, entered into any agreement, participated in any collusion, or otherwise taken action in restraint of free competitive bidding.

Upon receipt of written notice of the acceptance of this Bid, the Bidder shall, within twenty (20) calendar days, execute the agreement in the required form and deliver the Contract Bonds, and Insurance Certificates, required by the Contract Documents.

I am / We are an Individual / a Partnership / a Corporation

By _____ Trading as _____
(Individual's/General Partner's /Corporate Name)

_____
(State of Corporation)

Business Address: _____
_____
_____

Witness: _____ By: _____
(Authorized Signature)

(Seal)

_____
(Title)

Date: _____

ATACHMENTS
Sub-Contractor List
Non-Collusion Statement
Affidavit(s) of Employee Drug Testing Program
Bid Security
(Others as Required by Project Manual)

TRI-VALLEY TRAIL, PHASE II
WHITE CLAY CREEK STATE PARK
DIVISION OF PARKS AND RECREATION CONTRACT NO. WCCSP-07A

BID FORM

SUBCONTRACTOR LSIST

NOT FOR BID

In accordance with Title 29, Chapter 6962 (d)(10)b Delaware Code, the following sub-contractor listing must accompany the bid submittal. The name and address of the sub-contractor **must be listed for each category** where the bidder intends to use a sub-contractor to perform that category of work. In order to provide full disclosure and acceptance of the bid by the *Owner*, **it is required that bidders list themselves as being the sub-contractor for all categories where he/she is qualified and intends to perform such work.**

	Subcontractor Category	Subcontractor	Address (City & State)	Subcontractors tax payer ID # or Delaware Business license #
1.				
2.				
3.				
4.				
5.				
6.				
7.				
8.				

TRI-VALLEY TRAIL, PHASE II
WHITE CLAY CREEK STATE PARK
DIVISION OF PARKS AND RECREATION CONTRACT NO. WCCSP-07A

BID FORM

NON-COLLUSION STATEMENT

This is to certify that the undersigned bidder has neither directly or indirectly, entered into any agreement, participated in any collusion or otherwise taken any action in restraint of free competitive bidding in connection with this proposal submitted this date to the Office of Design and Development, Division of Parks and Recreation.

All the terms and conditions of the TRI-VALLEY TRAIL, PHASE II have been thoroughly examined and are understood.

NAME OF BIDDER _____

AUTHORIZED REPRESENTATIVE (TYPED): _____

AUTHORIZED REPRESENTATIVE (SIGNATURE): _____

TITLE: _____

ADDRESS OF BIDDER: _____

_____

_____

E-MAIL: _____

PHONE NUMBER: _____

Sworn to and Subscribed before me this _____ day of _____ of 20 _____.

My commission expires _____. NOTARY PULIC _____

<u>THIS PAGE MUST BE SIGNED AND NOTORIZED FOR YOUR BID TO BE CONSIDERED.</u>

NOT FOR BID

TRI-VALLEY TRAIL, PHASE II
WHITE CLAY CREEK STATE PARK
DIVISION OF PARKS AND RECREATION CONTRACT NO. WCCSP-07A

AFFIDAVIT
OF
EMPLOYEE DRUG TESTING PROGRAM

NOT FOR BID

4104 Regulations for the Drug Testing of Contractor and Subcontractor Employees Working on Large Public Works Projects requires that Contractors and Subcontractors implement a program of mandatory drug testing for Employees who work on Large Public Works Contracts funded all or in part with public funds.

We hereby certify that we have in place or will implement during the entire term of the contract a Mandatory Drug Testing Program for our employees on the jobsite that complies with this regulation:

Contractor/Subcontractor Name: _____

Contractor/Subcontractor Address: _____

_____

_____

Authorized Representative (typed or printed): _____

Authorized Representative (signature): _____

Title: _____

Sworn to and Subscribed before me this _____day of _____ 20____.

My Commission expires _____. NOTARY PUBLIC _____.

<u>THIS PAGE MUST BE SIGNED AND NOTARIZED FOR YOUR BID TO BE CONSIDERED.</u>

(THIS PAGE INTENTIONALLY LEFT BLANK)

NOT FOR BID

STATE OF DELAWARE
DEPARTMENT OF NATURAL RESOURCES AND ENVIRONMENTAL CONTROL

BID BOND

TO ACCOMPANY PROPOSAL
(Not necessary if security is used)

NOT FOR BID

KNOW ALL MEN BY THESE PRESENTS That: _____ _____of _____ in the County of _____ _____and State of _____ as **Principal**, and _____ _____ of _____ in the County of _____ and State of _____ as **Surety**, legally authorized to do business in the State of Delaware ("**State**"), are held and firmly unto the **State** in the sum of _____ _____ Dollars ($_____) or _____ percent not to exceed _____ _____ Dollars ($_____) of amount of bid on Contract No. _____, to be paid to the **State** for the use and benefit of _____ (***insert State agency name***) for which payment well and truly to be made, we do bind ourselves, our and each of our heirs, executors, administrators, and successors, jointly and severally for and in the whole firmly by these presents.

NOW THE CONDITION OF THIS OBLIGATION IS SUCH That if the above bonded **Principal** who has submitted to the _____ (***insert State agency name***) a certain proposal to enter into this contract for the furnishing of certain material and/or services within the **State**, shall be awarded this Contract, and if said **Principal** shall well and truly enter into and execute this Contract as may be required by the terms of this Contract and approved by the _____ _____ (***insert State agency name***) this Contract to be entered into within twenty days after the date of official notice of the award thereof in accordance with the terms of said proposal, then this obligation shall be void or else to be and remain in full force and virtue.

Sealed with _____ seal and dated this _____day of _____ in the year of our Lord two thousand and _____ (20___).

SEALED, AND DELIVERED IN THE
Presence of

_____
Name of Bidder (Organization)

Corporate Seal

By: _____
Authorized Signature

Attest _____

_____
Title

_____
Name of Surety

Witness:_____

By: _____

_____
Title

(THIS PAGE INTENTIONALLY LEFT BLANK)

NOT FOR BID

STANDARD FORM OF AGREEMENT BETWEEN OWNER AND CONTRACTOR A101-2007

The contract to be utilized on this project shall be the "Standard Form of Agreement Between Owner and Contractor" AIA Document A101-2007.

NOT FOR BID

NOT FOR BID

(THIS PAGE INTENTIONALLY LEFT BLANK)

SECTION 005413 - SUPPLEMENT TO AGREEMENT BETWEEN OWNER AND CONTRACTOR A101-2007

NOT FOR BID

The following supplements modify the "Standard Form of Agreement Between Owner and Contractor," AIA Document A101-2007. Where a portion of the Standard Form of Agreement is modified or deleted by the following, the unaltered portions of the Standard Form of Agreement shall remain in effect.

ARTICLE 5: PAYMENTS

5.1 PROGRESS PAYMENTS

5.1.3 Delete paragraph 5.1.3 in its entirety and replace with the following:

"Provided that a valid Application for Payment is received by the Architect that meets all requirements of the Contract, payment shall be made by the Owner not later than 30 days after the Owner receives the valid Application for Payment."

ARTICLE 6: DISPUTE RESOLUTION

6.2 BINDING DISPUTE RESOLUTION

Check Other – and add the following sentence:

"Any remedies available in law or in equity."

ARTICLE 8: MISCELLANEOUS PROVISIONS

8.2 Insert the following:

"Payments are due 30 days after receipt of a valid Application for Payment. After that 30 day period, interest may be charged at the rate of 1% per month not to exceed 12% per annum."

Delete paragraph 8.5 in its entirety and replace with the following:

"The Contractor's representative shall not be changed without ten days written notice to the Owner."

END OF SUPPLEMENT TO AGREEMENT BETWEEN OWNER AND CONTRACTOR

(THIS PAGE INTENTIONALLY LEFT BLANK)

NOT FOR BID

STATE OF DELAWARE
OFFICE OF MANAGEMENT AND BUDGET

PERFORMANCE BOND

Bond Number _____

NOT FOR BID

KNOW ALL PERSONS BY THESE PRESENTS, that we, _____, as principal ("**Principal**"), and _____, a _____ corporation, legally authorized to do business in the State of Delaware, as surety ("**Surety**"), are held and firmly bound unto the _____ ("**Owner**") (***insert State agency name***), in the amount of _____ ($_____), to be paid to **Owner**, for which payment well and truly to be made, we do bind ourselves, our and each and every of our heirs, executors, administrations, successors and assigns, jointly and severally, for and in the whole, firmly by these presents.

Sealed with our seals and dated this _____ day of _____, 20__.

NOW THE CONDITION OF THIS OBLIGATION IS SUCH, that if **Principal**, who has been awarded by **Owner** that certain contract known as Contract No. _____ dated the _____ day of _____, 20__ (the "Contract"), which Contract is incorporated herein by reference, shall well and truly provide and furnish all materials, appliances and tools and perform all the work required under and pursuant to the terms and conditions of the Contract and the Contract Documents (as defined in the Contract) or any changes or modifications thereto made as therein provided, shall make good and reimburse **Owner** sufficient funds to pay the costs of completing the Contract that **Owner** may sustain by reason of any failure or default on the part of **Principal**, and shall also indemnify and save harmless **Owner** from all costs, damages and expenses arising out of or by reason of the performance of the Contract and for as long as provided by the Contract; then this obligation shall be void, otherwise to be and remain in full force and effect.

Surety, for value received, hereby stipulates and agrees, if requested to do so by **Owner**, to fully perform and complete the work to be performed under the Contract pursuant to the terms, conditions and covenants thereof, if for any cause **Principal** fails or neglects to so fully perform and complete such work.

Surety, for value received, for itself and its successors and assigns, hereby stipulates and agrees that the obligation of **Surety** and its bond shall be in no way impaired or affected by any extension of time, modification, omission, addition or change in or to the Contract or the work to be performed thereunder, or by any payment thereunder before the time required therein, or by any waiver of any provisions thereof, or by any assignment, subletting or other transfer thereof or of any work to be performed or any monies due or to become due thereunder; and **Surety** hereby waives notice of any and all such extensions, modifications, omissions, additions, changes, payments, waivers, assignments, subcontracts and transfers and hereby expressly stipulates and agrees that any and all things done and omitted to be done by and in relation to assignees, subcontractors, and other

transferees shall have the same effect as to **Surety** as though done or omitted to be done by or in relation to **Principal**.

Surety hereby stipulates and agrees that no modifications, omissions or additions in or to the terms of the Contract shall in any way whatsoever affect the obligation of **Surety** and its bond.

Any proceeding, legal or equitable, under this Bond may be brought in any court of competent jurisdiction in the State of Delaware. Notices to **Surety** or Contractor may be mailed or delivered to them at their respective addresses shown below.

IN WITNESS WHEREOF, **Principal** and **Surety** have hereunto set their hand and seals, and such of them as are corporations have caused their corporate seals to be hereto affixed and these presents to be signed by their duly authorized officers, the day and year first above written.

NOT FOR BID

PRINCIPAL

Name: _____

Witness or Attest: Address: _____

_____ By: _____(SEAL)
Name: Name:
Title:

(Corporate Seal)

SURETY

Name: _____

Witness or Attest: Address: _____

_____ By: _____ (SEAL)
Name: Name:
Title:

(Corporate Seal)

STATE OF DELAWARE
OFFICE OF MANAGEMENT AND BUDGET

PAYMENT BOND

Bond Number: _____

NOT FOR BID

KNOW ALL PERSONS BY THESE PRESENTS, that we, _____, as principal ("**Principal**"), and _____, a _____ corporation, legally authorized to do business in the State of Delaware, as surety ("**Surety**"), are held and firmly bound unto the _____ ("**Owner**") (***insert State agency name***), in the amount of _____ ($_____) to be paid to **Owner**, for which payment well and truly to be made, we do bind ourselves, our and each and every of our heirs, executors, administrations, successors and assigns, jointly and severally, for and in the whole firmly by these presents.

Sealed with our seals and dated this _____ day of_____, 20__.

NOW THE CONDITION OF THIS OBLIGATION IS SUCH, that if **Principal**, who has been awarded by **Owner** that certain contract known as Contract No. _____dated the _____ day of _____, 20__ (the "Contract"), which Contract is incorporated herein by reference, shall well and truly pay all and every person furnishing materials or performing labor or service in and about the performance of the work under the Contract, all and every sums of money due him, her, them or any of them, for all such materials, labor and service for which **Principal** is liable, shall make good and reimburse **Owner** sufficient funds to pay such costs in the completion of the Contract as **Owner** may sustain by reason of any failure or default on the part of **Principal**, and shall also indemnify and save harmless **Owner** from all costs, damages and expenses arising out of or by reason of the performance of the Contract and for as long as provided by the Contract; then this obligation shall be void, otherwise to be and remain in full force and effect.

Surety, for value received, for itself and its successors and assigns, hereby stipulates and agrees that the obligation of **Surety** and its bond shall be in no way impaired or affected by any extension of time, modification, omission, addition or change in or to the Contract or the work to be performed thereunder, or by any payment thereunder before the time required therein, or by any waiver of any provisions thereof, or by any assignment, subletting or other transfer thereof or of any work to be performed or any monies due or to become due thereunder; and **Surety** hereby waives notice of any and all such extensions, modifications, omissions, additions, changes, payments, waivers, assignments, subcontracts and transfers and hereby expressly stipulates and agrees that any and all things done and omitted to be done by and in relation to assignees, subcontractors, and other transferees shall have the same effect as to **Surety** as though done or omitted to be done by or in relation to **Principal**.

Surety hereby stipulates and agrees that no modifications, omission or additions in or to the terms of the Contract shall in any way whatsoever affect the obligation of **Surety** and its bond.

Any proceeding, legal or equitable, under this Bond may be brought in any court of competent jurisdiction in the State of Delaware. Notices to **Surety** or Contractor may be mailed or delivered to them at their respective addresses shown below.

IN WITNESS WHEREOF, **Principal** and **Surety** have hereunto set their hand and seals, and such of them as are corporations have caused their corporate seal to be hereto affixed and these presents to be signed by their duly authorized officers, the day and year first above written.

NOT FOR BID

PRINCIPAL

Name: _____

Witness or Attest: Address: _____

_____ By: _____(SEAL)
Name: Name:
Title:

(Corporate Seal)

SURETY

Name: _____

Witness or Attest: Address: _____

_____ By: _____(SEAL)
Name: Name:
Title:

(Corporate Seal)

AIA® Document G702™ – 1992

Application and Certificate for Payment

TO OWNER:	PROJECT: BHH	APPLICATION NO: 001	Distribution to:
		PERIOD TO:	OWNER: ☐
		CONTRACT FOR: General Construction	ARCHITECT: ☐
FROM CONTRACTOR:	VIA ARCHITECT: Bernardon Haber Holloway Architects PC, Three Mill Road, Suite 211, Wilmington, Delaware 19806	CONTRACT DATE:	CONTRACTOR: ☐
		PROJECT NOS: / /	FIELD: ☐
			OTHER: ☐

CONTRACTOR'S APPLICATION FOR PAYMENT

Application is made for payment, as shown below, in connection with the Contract.
Continuation Sheet, AIA Document G703, is attached.

1. ORIGINAL CONTRACT SUM ..... $ 0.00
2. Net change by Change Orders ..... $ 0.00
3. CONTRACT SUM TO DATE (Line 1 ± 2) ..... $ 0.00
4. TOTAL COMPLETED & STORED TO DATE (Column G on G703) ..... $ 0.00
5. RETAINAGE:
   a. 0 % of Completed Work (Column D + E on G703) $ 0.00
   b. 0 % of Stored Material (Column F on G703) $ 0.00
   Total Retainage (Lines 5a + 5b or Total in Column I of G703) ..... $ 0.00
6. TOTAL EARNED LESS RETAINAGE ..... $ 0.00
   (Line 4 Less Line 5 Total)
7. LESS PREVIOUS CERTIFICATES FOR PAYMENT ..... $ 0.00
   (Line 6 from prior Certificate)
8. CURRENT PAYMENT DUE ..... $ 0.00
9. BALANCE TO FINISH, INCLUDING RETAINAGE
   (Line 3 less Line 6) $ 0.00

CHANGE ORDER SUMMARY	ADDITIONS	DEDUCTIONS
Total changes approved in previous months by Owner	$ 0.00	$ 0.00
Total approved this Month	$ 0.00	$ 0.00
TOTALS	$ 0.00	$ 0.00
NET CHANGES by Change Order	$	0.00

The undersigned Contractor certifies that to the best of the Contractor's knowledge, information and belief the Work covered by this Application for Payment has been completed in accordance with the Contract Documents, that all amounts have been paid by the Contractor for Work for which previous Certificates for Payment were issued and payments received from the Owner, and that current payment shown herein is now due.

CONTRACTOR:

By: _____ Date: _____

State of:

County of:

Subscribed and sworn to before me this day of

Notary Public:

My Commission expires:

ARCHITECT'S CERTIFICATE FOR PAYMENT

In accordance with the Contract Documents, based on on-site observations and the data comprising this application, the Architect certifies to the Owner that to the best of the Architect's knowledge, information and belief the Work has progressed as indicated, the quality of the Work is in accordance with the Contract Documents, and the Contractor is entitled to payment of the AMOUNT CERTIFIED.

AMOUNT CERTIFIED ..... $ 0.00

(Attach explanation if amount certified differs from the amount applied. Initial all figures on this Application and on the Continuation Sheet that are changed to conform with the amount certified.)

ARCHITECT:

By: _____ Date: _____

This Certificate is not negotiable. The AMOUNT CERTIFIED is payable only to the Contractor named herein. Issuance, payment and acceptance of payment are without prejudice to any rights of the Owner or Contractor under this Contract

NOT FOR BID

AIA Document G702™ – 1992. Copyright © 1953, 1963, 1965, 1978 and 1992 by The American Institute of Architects. All rights reserved. WARNING: This AIA® Document is protected by U.S. Copyright Law and International Treaties. Unauthorized reproduction or distribution of this AIA® Document, or any portion of it, may result in severe civil and criminal penalties, and will be prosecuted to the maximum extent possible under the law. This document was produced by AIA software at 15:47:58 on 03/02/2006 under Order No.1000210037_1 which expires on 12/26/2006, and is not for resale.
(1431372660)
User Notes:

AIA® Document G703™ – 1992

Continuation Sheet

AIA Document G702, APPLICATION AND CERTIFICATION FOR PAYMENT, containing Contractor's signed certification is attached.
In tabulations below, amounts are stated to the nearest dollar.
Use Column I on Contracts where variable retainage for line items may apply.

APPLICATION NO: 001
APPLICATION DATE:
PERIOD TO:
ARCHITECT'S PROJECT NO:

A	B	C	D	E	F	G		H	I
ITEM NO.	DESCRIPTION OF WORK	SCHEDULED VALUE	WORK COMPLETED: FROM PREVIOUS APPLICATION (D + E)	WORK COMPLETED: THIS PERIOD	MATERIALS PRESENTLY STORED (NOT IN D OR E)	TOTAL COMPLETED AND STORED TO DATE (D+E+F)	% (G ÷ C)	BALANCE TO FINISH (C - G)	RETAINAGE (IF VARIABLE RATE)
	GRAND TOTAL	$ 0.00	$ 0.00	$ 0.00	$ 0.00	$ 0.00	0.00 %	$ 0.00	$ 0.00

NOT FOR BID

AIA Document G703™ – 1992. Copyright © 1963, 1965, 1966, 1967,1970, 1978, 1983 and 1992 by The American Institute of Architects. **All rights reserved.** WARNING: This AIA® Document is protected by U.S. Copyright Law and International Treaties. Unauthorized reproduction or distribution of this AIA® Document, or any portion of it, may result in severe civil and criminal penalties, and will be prosecuted to the maximum extent possible under the law. This document was produced by AIA software at 15:49:49 on 03/02/2006 under Order No.1000210037_1 which expires on 12/26/2006, and is not for resale.
User Notes:

(1016058631)

SECTION 006277 - BUY AMERICA

PART 1 – GENERAL

1.1 Requirements in the Federal-aid Highway Program

A. By signing and submitting this proposal, the bidder certifies that:

1. In accordance with 23 U.S.C, 313 and 23 CFR 635.410, all iron and steel materials permanently incorporated into this project will be produced in the United States and that all manufacturing processes involving these materials will occur in the U.S, except that a minimal amount of foreign steel or iron materials may be used, provided the cost of the foreign materials does not exceed 0.1 percent of the total Contract cost or $2,500.00, whichever is greater. If such minimal amount of foreign steel is used, the Contractor shall maintain a record of the costs to ensure that the allowable limit is not exceeded. This documentation shall be presented to the Department upon request.

2. At the Department's request, I/we will provide manufacturer's/supplier's documentation verifying domestic origin as defined in the Specifications. All Materials accepted on the basis of such Certificate of Compliance may be sampled by the Department and tested at any time. Use of Material on the basis of Certificate of Compliance shall not relieve the Contractor of responsibility for incorporating Material in the Project conforming to the requirements of the Contract. Any Material not conforming to such requirements will be subject to rejection whether in place or not. The Department reserves the right to refuse to permit the use of Material on the basis of Certificate of Compliance.

NOT FOR BID

PART 1 - PRODUCTS (Not Used)

PART 2 - EXECUTION (Not Used)

END OF SECTION 006277

(THIS PAGE LEFT INTENTIONALLY BLANK)

NOT FOR BID

STATE OF DELAWARE

DIVISION OF FACILITIES MANAGEMENT

GENERAL CONDITIONS

TO THE

CONTRACT

The General Conditions of this Contract are as stated in the American Institute of Architects Document AIA A201 (2007 Edition) entitled General Conditions of the Contract for Construction and is part of this project manual as if herein written in full.

NOT FOR BID

NOT FOR BID

(THIS PAGE INTENTIONALLY LEFT BLANK)

SECTION 007313 - SUPPLEMENTARY GENERAL CONDITIONS A201-2007

The following supplements modify the "General Conditions of the Contract for Construction," AIA Document A201-2007. Where a portion of the General Conditions is modified or deleted by the Supplementary Conditions, the unaltered portions of the General Conditions shall remain in effect.

NOT FOR BID

TABLE OF ARTICLES

1. GENERAL PROVISIONS

2. OWNER

3. CONTRACTOR

4. ADMINISTRATION OF THE CONTRACT

5. SUBCONTRACTORS

6. CONSTRUCTION BY OWNER OR BY SEPARATE CONTRACTORS

7. CHANGES IN THE WORK

8. TIME

9. PAYMENTS AND COMPLETION

10. PROTECTION OF PERSONS AND PROPERTY

11. INSURANCE AND BONDS

12. UNCOVERING AND CORRECTION OF WORK

13. MISCELLANEOUS PROVISIONS

14. TERMINATION OR SUSPENSION OF THE CONTRACT

15. CLAIMS AND DISPUTES

NOT FOR BID

ARTICLE 1: GENERAL PROVISIONS

1.1 BASIC DEFINITIONS

1.1.1 THE CONTRACT DOCUMENTS

Delete the last sentence in its entirety and replace with the following:

"The Contract Documents also include Advertisement for Bid, Instructions to Bidder, sample forms, the Bid Form, the Contractor's completed Bid and the Award Letter."

Add the following Paragraph:

1.1.1.1 In the event of conflict or discrepancies among the Contract Documents, the Documents prepared by the State of Delaware, Division of Parks and Recreation shall take precedence over all other documents.

1.2 CORRELATION AND INTENT OF THE CONTRACT DOCUMENTS

Add the following Paragraphs:

1.2.4 In the case of an inconsistency between the Drawings and the Specifications, or within either document not clarified by addendum, the better quality or greater quantity of work shall be provided in accordance with the Architect's interpretation.

1.2.5 The word "PROVIDE" as used in the Contract Documents shall mean "FURNISH AND INSTALL" and shall include, without limitation, all labor, materials, equipment, transportation, services and other items required to complete the Work.

1.2.6 The word "PRODUCT" as used in the Contract Documents means all materials, systems and equipment.

1.5 OWNERSHIP AND USE OF DRAWINGS, SPECIFICATIONS AND OTHER INSTRUMENTS OF SERVICE

Delete Paragraph 1.5.1 in its entirety and replace with the following:

"All pre-design studies, drawings, specifications and other documents, including those in electronic form, prepared by the Architect under this Agreement are, and shall remain, the property of the Owner whether the Project for which they are made is executed or not. Such documents may be used by the Owner to construct one or more like Projects without the approval of, or additional compensation to, the Architect. The Contractor, Subcontractors, Sub-subcontractors and Material or Equipment Suppliers are authorized to use and reproduce applicable portions of the Drawings, Specifications and other documents prepared by the Architect and the Architect's consultants appropriate to and for use in the execution of their Work under the Contract Documents. They are not to be used by the Contractor or any Subcontractor, Sub-subcontractor or Material and Equipment Supplier on other Projects or for

additions to this Project outside the scope of the Work without the specific written consent of the Owner, Architect and Architect's consultants.

The Architect shall not be liable for injury or damage resulting from the re-use of drawings and specifications if the Architect is not involved in the re-use Project. Prior to re-use of construction documents for a Project in which the Architect is not also involved, the Owner will remove from such documents all identification of the original Architect, including name, address and professional seal or stamp."

Delete Paragraph 1.5.2 in its entirety.

ARTICLE 2: OWNER

2.2 INFORMATION AND SERVICES REQUIRED OF THE OWNER

To Subparagraph 2.2.3 – Add the following sentence:

"The Contractor, at their expense shall bear the costs to accurately identify the location of all underground utilities in the area of their excavation and shall bear all cost for any repairs required, owing to failure to accurately identify said utilities."

Delete Subparagraph 2.2.5 in its entirety and substitute the following:

2.2.5 The Contractor shall be furnished free of charge a specified number of copies of the Drawings and Project Manuals. Refer to Specification Section SUMMARY OF WORK. Additional sets will be furnished at the cost of reproduction, postage and handling.

ARTICLE 3: CONTRACTOR

3.2 REVIEW OF CONTRACT DOCUMENTS AND FIELD CONDITIONS BY CONTRACTOR

Amend Paragraph 3.2.2 to state that any errors, inconsistencies or omissions discovered shall be reported to the Architect and Owner immediately.

Delete the third sentence in Paragraph 3.2.3.

3.3 SUPERVISION AND CONSTRUCTION PROCEDURES

Add the following Paragraphs:

3.3.2.1 The Contractor shall immediately remove from the Work, whenever requested to do so by the Owner, any person who is considered by the Owner or Architect to be incompetent or disposed to be so disorderly, or who for any reason is not satisfactory to the Owner, and that person shall not again be employed on the Work without the consent of the Owner or the Architect.

NOT FOR BID

3.3.4 The Contractor must provide suitable storage facilities at the Site for the proper protection and safe storage of their materials. Consult the Owner and the Architect before storing any materials.

3.3.5 When any room is used as a shop, storeroom, office, etc., by the Contractor or Subcontractor(s) during the construction of the Work, the Contractor making use of these areas will be held responsible for any repairs, patching or cleaning arising from such use.

3.4 LABOR AND MATERIALS

Add the Following Paragraphs:

3.4.4 Before starting the work, each Contractor shall carefully examine all preparatory Work that has been executed to receive their Work. Check carefully, by whatever means are required, to insure that its Work and adjacent, related Work, will finish to proper contours, planes and levels. Promptly notify the General Contractor/Construction Manager of any defects or imperfections in preparatory Work which will in any way affect satisfactory completion of its Work. Absence of such notification will be construed as an acceptance of preparatory Work and later claims of defects will not be recognized.

3.4.5 Under no circumstances shall the Contractor's Work proceed prior to preparatory Work proceed prior to preparatory Work having been completely cured, dried and/or otherwise made satisfactory to receive this Work. Responsibility for timely installation of all materials rests solely with the Contractor responsible for that Work, who shall maintain coordination at all times.

3.5 WARRANTY

Add the following Paragraphs:

3.5.1 The Contractor will guarantee all materials and workmanship against original defects, except injury from proper and usual wear when used for the purpose intended, for two years after Acceptance by the Owner, and will maintain all items in perfect condition during the period of guarantee.

3.5.2 Defects appearing during the period of guarantee will be made good by the Contractor at his expense upon demand of the Owner, it being required that all work will be in perfect condition when the period of guarantee will have elapsed.

3.5.3 In addition to the General Guarantee there are other guarantees required for certain items for different periods of time than the two years as above, and are particularly so stated in that part of the specifications referring to same. The said guarantees will commence at the same time as the General Guarantee.

3.5.4 If the Contractor fails to remedy any failure, defect or damage within a reasonable time after receipt of notice, the Owner will have the right to replace, repair, or otherwise remedy the failure, defect or damage at the Contractor's expense.

NOT FOR BID

3.11 DOCUMENTS AND SAMPLES AT THE SITE

Add the following Paragraphs:

3.11.1 During the course of the Work, the Contractor shall maintain a record set of drawings on which the Contractor shall mark the actual physical location of all piping, valves, equipment, conduit, outlets, access panels, controls, actuators, including all appurtenances that will be concealed once construction is complete, etc., including all invert elevations.

3.11.2 At the completion of the project, the Contractor shall obtain a set of reproducible drawings from the Architect, and neatly transfer all information outlined in 3.11.1 to provide a complete record of the as-built conditions.

3.11.3 The Contractor shall provide two (2) prints of the as-built conditions, along with the reproducible drawings themselves, to the Owner and one (1) set to the Architect. In addition, attach one complete set to each of the Operating and Maintenance Instructions/Manuals.

NOT FOR BID

3.13 USE OF SITE

Add the following new subparagraphs:

3.13.1 The Contractor will not load nor permit any part of the structure to be loaded with weight that will endanger the structure.

3.13.2 Storage areas will be defined for the storage of the Contractor's materials and equipment and he shall confine his materials, equipment, and operations of his workmen to such limits as indicated by the Owner. Unless otherwise indicated in the Specifications, the storage areas will be outdoors, and the contractor shall provide whatever shelter is necessary for his storage and fabricating needs. No workmen shall trespass within areas or buildings of the Owner other than those related to the Work of the Contract. The Contractor shall rigidly enforce this regulation. Any materials, equipment or temporary structures belonging to the Contractor shall be moved when so directed by the Owner to permit the execution of the work of others in connection with the Project.

3.17 In the second sentence of the paragraph, insert “indemnify” between “shall” and “hold”.

ARTICLE 4: ADMINISTRATION OF THE CONTRACT

4.2 ADMINISTRATION OF THE CONTRACT

Delete the first sentence of Paragraph 4.2.7 and replace with the following:

The Architect will review and approve or take other appropriate action upon the Contractor's submittals such as Shop Drawings, Product Data and Samples for the purpose of checking for conformance with the Contract Documents.

Delete the second sentence of Paragraph 4.2.7 and replace with the following:

The Architect's action will be taken with such reasonable promptness as to cause no delay in the Work in the activities of the Owner, Contractor or Separate Contractors, while allowing sufficient time in the Owner's professional judgment to permit adequate review.

Add the following Paragraph:

4.2.10.1 There will be no full-time project representative provided by the Owner or Architect on this project.

Add to Paragraph 4.2.13 "and in compliance with all local requirements." to the end of the sentence

NOT FOR BID

ARTICLE 5: SUBCONTRACTORS

5.2 AWARD OF SUBCONTRACTS AND OTHER CONTRACTS FOR PORTIONS OF THE WORK

Delete Paragraph 5.2.3 in its entirety and replace with the following:

5.2.3 If the Owner or Architect has reasonable objection to a person or entity proposed by the Contractor, the Contractor shall propose another to whom the Owner or Architect has no reasonable objection, subject to the statutory requirements of 29 Delaware Code § 6962(d)(10)b.3 and 4.

ARTICLE 6: CONSTRUCTION BY OWNER OR BY SEPARATE CONTRACTORS

6.1 OWNER'S RIGHT TO PERFORM CONSTRUCTION AND TO AWARD SEPARATE CONTRACTS

Delete Paragraph 6.1.4 in its entirety.

6.2 MUTUAL RESPONSIBILITY

6.2.3 In the second sentence, strike the word "shall" and insert the word "may".

Add the following Paragraph to Article 6:

6.4 DEPARTMENT FURNISHED MATERIALS AND EQUIPMENT

6.4.1 If any materials or equipment are to be furnished by the Owner for the Work, they will be so specified in the Contract Documents. Unless otherwise specified, it shall be the Contractor's responsibility to locate, receive, handle and store, if necessary, any

item of Owner furnished material or equipment which he is required by the Contract to install, erect or handle in any way, from the time it is received by the Contractor at the jobsite or other Owner approved location until completion of the Work in accordance with the Contract Documents. Damaged or lost Owner furnished items shall be repaired or replaced by the Contractor without additional cost to the Owner. Refer to Specification Section SUMMARY OF WORK for list of Owner furnished materials and equipment.

ARTICLE 7: CHANGES IN THE WORK

(SEE ARTICLE 7: CHANGES IN WORK IN THE GENERAL REQUIREMENTS)

ARTICLE 8: TIME

8.2 PROGRESS AND COMPLETION

Add the following Paragraphs:

8.2.1.1 Refer to Specification Section SUMMARY OF WORK for Contract time requirements.

8.2.4 If the Work falls behind the Progress Schedule as submitted by the Contractor, the Contractor shall employ additional labor and/or equipment necessary to bring the Work into compliance with the Progress Schedule at no additional cost to the Owner.

8.3 DELAYS AND EXTENSION OF TIME

8.3.1 Strike "arbitration" and insert "remedies at law or in equity".

Add the following Paragraph:

8.3.2.1 The Contractor shall update the status of the suspension, delay, or interruption of the Work with each Application for Payment. (The Contractor shall report the termination of such cause immediately upon the termination thereof.) Failure to comply with this procedure shall constitute a waiver for any claim for adjustment of time or price based upon said cause.

Delete Paragraph 8.3.3 in its entirety and replace with the following:

8.3.3 Except in the case of a suspension of the Work directed by the Owner, an extension of time under the provisions of Paragraph 8.3.1 shall be the Contractor's sole remedy in the progress of the Work and there shall be no payment or compensation to the Contractor for any expense or damage resulting from the delay.

Add the following Paragraph:

NOT FOR BID

8.3.4 By permitting the Contractor to work after the expired time for completion of the project, the Owner does not waive their rights under the Contract.

ARTICLE 9: PAYMENTS AND COMPLETION

9.2 SCHEDULE OF VALUES

Add the following Paragraphs:

9.2.1 The Schedule of Values shall be submitted using AIA Document G702, Continuation Sheet to G703.

9.2.2 The Schedule of Values is to include a line item for Project Closeout Document Submittal. The value of this item is to be no less than 1% of the initial contract amount.

9.3 APPLICATIONS FOR PAYMENT

Add the following Paragraph:

9.3.1.3 Application for Payment shall be submitted on AIA Document G702 "Application and Certificate for Payment", supported by AIA Document G703 "Continuation Sheet". Said Applications shall be fully executed and notarized.

Add the following Paragraphs:

9.3.4 Until Closeout Documents have been received and outstanding items completed the Owner will pay 95% (ninety-five percent) of the amount due the Contractor on account of progress payments.

9.3.5 The Contractor shall provide a current and updated Progress Schedule to the Architect with each Application for Payment. Failure to provide Schedule will be just cause for rejection of Application for Payment.

9.5 DECISIONS TO WITHHOLD CERTIFICATION

Add the following to 9.5.1:

.8 failure to provide a current Progress Schedule;
.9 a lien or attachment is filed;
.10 failure to comply with mandatory requirements for maintaining Record Documents.

9.6 PROGRESS PAYMENTS

Delete Paragraph 9.6.1 in its entirety and replace with the following:

NOT FOR BID

9.6.1 After the Architect has approved and issued a Certificate for Payment, payment shall be made by the Owner within 30 days after Owner's receipt of the Certificate for Payment.

NOT FOR BID

9.7 FAILURE OF PAYMENT

In first sentence, strike "seven" and insert "thirty (30)". Also strike "binding dispute resolution" and insert "remedies at law or in equity".

9.8 SUBSTANTIAL COMPLETION

To Subparagraph 9.8.3 - Add the following sentence:

"If the Architect is required to make more than 2 inspections of the same portion of work, the Contractor shall be responsible for all costs associated with subsequent inspections including but not limited to any Architect's fees."

9.8.5 In the second sentence, strike "shall" and insert "may".

ARTICLE 10: PROTECTION OF PERSONS AND PROPERTY

10.1 SAFETY PRECAUTIONS AND PROGRAMS

Add the following paragraphs:

10.1.1.1.1 Each Contractor shall develop a safety program in accordance with the Occupational Safety and Health Act of 1970. A copy of said plan shall be furnished to the Owner and Architect prior to the commencement of that Contractor's Work.

10.1.2 Each Contractor shall appoint a Safety Representative. Safety Representatives shall be someone who is on site on a full time basis. If deemed necessary by the Owner or Architect, Contractor Safety meetings will be scheduled. The attendance of all Safety Representatives will be required. Minutes will be recorded of said meetings by the Contractor and will be distributed to all parties as well as posted in all job offices/trailers etc.

10.2 SAFETY OF PERSONS AND PROPERTY

Add the following Paragraph:

10.2.4.1 As required in the Hazardous Chemical Act of June 1984, all vendors supplying any material that may be defined as hazardous must provide Material Safety Data Sheets for those products. Any chemical product should be considered hazardous if it has a caution warning on the label relating to a potential physical or health hazard, if it is known to be present in the work place, and if employees may be exposed under normal conditions or in foreseeable emergency situations. Material Safety Data Sheets shall be provided directly to the Owner, along with the shipping slips that include those products.

10.3 HAZARDOUS MATERIALS

Delete Paragraph 10.3.3 in its entirety.

NOT FOR BID

Delete Paragraph 10.3.6 in its entirety.

ARTICLE 11: INSURANCE AND BONDS

11.1 CONTRACTOR'S LIABILITY INSURANCE

11.1.4 Strike "the Owner" immediately following "(1)" and strike "and (2) the Owner as an additional insured for claims caused in whole or in part by the Contractor's negligent acts or omissions during the Contractor's completed operations."

11.2 OWNER'S LIABILITY INSURANCE

Delete Paragraph 11.2 in its entirety.

11.3 PROPERTY INSURANCE

Delete Paragraph 11.3 in its entirety and replace with the following:

11.3 The State will not provide Builder's All Risk Insurance for the Project. The Contractor and all Subcontractors shall provide property coverage for their tools and equipment, as necessary. Any mandatory deductible required by the Contractor's Insurance shall be the responsibility of the Contractor.

11.4 PERFORMANCE BOND AND PAYMENT BOND

11.4.1 Add the following sentence: "The bonds will conform to those forms approved by the Office of Management and Budget."

ARTICLE 12: UNCOVERING AND CORRECTION OF WORK

12.2.2 AFTER SUBSTANTIAL COMPLETION

Add the following Paragraph:

12.2.2.1.1 At any time during the progress of the Work, or in any case where the nature of the defects will be such that it is not expedient to have corrected, the Owner, at its option, will have the right to deduct such sum, or sums, of money from the amount of the Contract as it considers justified to adjust the difference in value between the defective work and that required under contract including any damage to the structure.

12.2.2.1 Strike "one" and insert "two".

12.2.2.2 Strike "one" and insert "two".

12.2.2.3 Strike "one" and insert "two".

12.2.5 In second sentence, strike "one" and insert "two".

NOT FOR BID

NOT FOR BID

ARTICLE 13: MISCELLANEOUS PROVISIONS

13.1 GOVERNING LAW

Strike "except that, if the parties have selected arbitration as the method of binding dispute resolution, the Federal Arbitration Act shall govern. Section 15.4."

13.6 INTEREST

Strike "the date payment is due at such rate as the parties may agree upon in writing or, in the absence thereof, at the legal rate prevailing from time to time at the place where the Project is located." Insert "30 days of presentment of the authorized Certificate of Payment at the annual rate of 12% or 1% per month.

13.7 TIME LIMITS ON CLAIMS

Strike the last sentence.

Add the following Paragraph:

13.8 CONFLICTS WITH FEDERAL STATUTES OR REGULATIONS

13.8.1 If any provision, specifications or requirement of the Contract Documents conflict or is inconsistent with any statute, law or regulation of the government of the United State of America, the Contractor shall notify the Architect and Owner immediately upon discovery.

ARTICLE 14: TERMINATION OR SUSPENSION OF THE CONTRACT

14.4 TERMINATION BY THE OWNER FOR CONVENIENCE

Delete Paragraph 14.4.3 in its entirety and replace with the following:

14.4.3 In case of such termination for the Owner's convenience, the Contractor shall be entitled to receive payment for Work executed, and cost incurred by reason of such termination along with reasonable overhead.

ARTICLE 15: CLAIMS AND DISPUTES

15.1.2 Throughout the Paragraph strike "21" and insert "45".

15.1.6 CLAIMS FOR CONSEQUENTIAL DAMAGES

Delete Paragraph 15.1.6 in its entirety.

15.2 INITIAL DECISION

Delete Paragraph 15.2.5 in its entirety and replace with the following:

15.2.5 The Architect will approve or reject Claims by written decision, which shall state the reasons therefore and shall notify the parties of any change in the Contract Sum or Contract Time or both. The approval or rejection of a Claim by the Architect shall be subject to mediation and other remedies at law or in equity.

Delete Paragraph 15.2.6 and its subparagraphs in their entirety.

15.3 MEDIATION

15.3.1 Strike "binding dispute resolution" and insert "any or all remedies at law or in equity".

15.3.2 In the first sentence, delete "administered by the American Arbitration Association in accordance with its Construction Industry Mediation Procedure in effect on the date of the Agreement," Strike "binding dispute resolution" and insert "remedies at law and in equity".

15.4 ARBITRATION

Delete Paragraph 15.4 and its sub-sections in its entirety.

NOT FOR BID

END OF SECTION 007313

(THIS PAGE INTENTIONALLY LEFT BLANK)

NOT FOR BID

STATE OF DELAWARE
DEPARTMENT OF LABOR
DIVISION OF INDUSTRIAL AFFAIRS
OFFICE OF LABOR LAW ENFORCEMENT
PHONE: (302) 451-3423

Mailing Address:
4425 North Market St. 3rd FL
Wilmington, DE 19802

Located at:
4425 North Market St. 3rd FL
Wilmington, DE 19802

PREVAILING WAGES FOR **HIGHWAY CONSTRUCTION** EFFECTIVE MARCH 15, 2017

NOT FOR BID

CLASSIFICATION	NEW CASTLE	KENT	SUSSEX
BRICKLAYERS	51.99	51.99	15.17
CARPENTERS	5[illegible].8	53.81	42.77
CEMENT FINISHERS	3[illegible]	34.12	27.13
ELECTRICAL LINE WORKERS	23.52	45.39	22.22
ELECTRICIANS	6.85	66.85	66.85
IRON WORKERS	62.35	24.95	26.50
LABORERS	43.30	39.85	39.12
MILLWRIGHTS	16.84	16.34	14.11
PAINTERS	67.07	67.07	67.07
PILEDRIVERS	69.44	24.83	28.17
POWER EQUIPMENT OPERATORS	42.91	41.41	37.92
SHEET METAL WORKERS	23.79	21.23	19.23
TRUCK DRIVERS	35.73	29.51	35.95

CERTIFIED: 10/10/2017 BY: _____
ADMINISTRATOR, OFFICE OF LABOR LAW ENFORCEMENT

NOTE: THESE RATES ARE PROMULGATED AND ENFORCED PURSUANT TO THE PREVAILING WAGE REGULATIONS ADOPTED BY THE DEPARTMENT OF LABOR ON APRIL 3, 1992.

CLASSIFICATIONS OF WORKERS ARE DETERMINED BY THE DEPARTMENT OF LABOR. FOR ASSISTANCE IN CLASSIFYING WORKERS, OR FOR A COPY OF THE REGULATIONS OR CLASSIFICATIONS, PHONE (302) 761-8200

NON-REGISTERED APPRENTICES MUST BE PAID THE MECHANIC'S RATE.

PROJECT: Tri-Valley Trail, Phase II, New Castle County

(THIS PAGE INTENTIONALLY LEFT BLANK)

NOT FOR BID

GENERAL REQUIREMENTS

NOT FOR BID

TABLE OF ARTICLES

1. GENERAL PROVISIONS
2. OWNER
3. CONTRACTOR
4. ADMINISTRATION OF THE CONTRACT
5. SUBCONTRACTORS
6. CONSTRUCTION BY OWNER OR BY SEPARATE CONTRACTORS
7. CHANGES IN THE WORK
8. TIME
9. PAYMENTS AND COMPLETION
10. PROTECTION OF PERSONS AND PROPERTY
11. INSURANCE AND BONDS
12. UNCOVERING AND CORRECTION OF WORK
13. MISCELLANEOUS PROVISIONS
14. TERMINATION OR SUSPENSION OF THE CONTRACT

NOT FOR BID

ARTICLE 1: GENERAL

1.1 CONTRACT DOCUMENTS

1.1.1 The intent of the Contract Documents is to include all items necessary for the proper execution and completion of the Work by the Contractor. The Contract Documents are complementary and what is required by one shall be as binding as if required by all. Performance by the Contractor shall be required to an extent consistent with the Contract Documents and reasonably inferable from them as being necessary to produce the intended results.

1.1.2 Work including material purchases shall not begin until the Contractor is in receipt of a bonafide State of Delaware Purchase Order. Any work performed or material purchases prior to the issuance of the Purchase Order is done at the Contractor's own risk and cost.

1.2 EQUALITY OF EMPLOYMENT OPPORTUNITY ON PUBLIC WORKS

1.2.1 For Public Works Projects financed in whole or in part by state appropriation the Contractor agrees that during the performance of this contract:

1. The Contractor will not discriminate against any employee or applicant for employment because of race, creed, sex, color, sexual orientation, gender identity or national origin. The Contractor will take positive steps to ensure that applicants are employed and that employees are treated during employment without regard to their race, creed, sex, color, sexual orientation, gender identity or national origin. Such action shall include, but not be limited to, the following: employment, upgrading, demotion or transfer; recruitment or recruitment advertising; layoff or termination; rates of pay or other forms of compensation; and selection for training, including apprenticeship. The Contractor agrees to post in conspicuous places available to employees and applicants for employment notices to be provided by the contracting agency setting forth this nondiscrimination clause.

2. The Contractor will, in all solicitations or advertisements for employees placed by or on behalf of the Contractor, state that all qualified applicants will receive consideration for employment without regard to race, creed, sex, color, sexual orientation, gender identity or national origin."

ARTICLE 2: OWNER

(NO ADDITIONAL GENERAL REQUIREMENTS – SEE SUPPLEMENTARY GENERAL CONDITIONS)

ARTICLE 3: CONTRACTOR

3.1 Schedule of Values: The successful Bidder shall within twenty (20) days after receiving notice to proceed with the work, furnish to the Owner a complete schedule of values on the various items comprising the work.

3.2 Subcontracts: Upon approval of Subcontractors, the Contractor shall award their Subcontracts as soon as possible after the signing of their own contract and see that all material, their own and those of their Subcontractors, are promptly ordered so that the work will not be delayed by failure of materials to arrive on time.

3.3 Before commencing any work or construction, the General Contractor is to consult with the Owner as to matters in connection with access to the site and the allocation of Ground Areas for the various features of hauling, storage, etc.

3.4 The Contractor shall supervise and direct the Work, using the Contractor's best skill and attention. The Contractor shall be solely responsible for and have control over construction means, methods, techniques, sequences and procedures and for coordinating all portions of the Work under the Contract, unless the Contract Documents give other specific instructions.

3.5 The Contractor shall enforce strict discipline and good order among the Contractor's employees and other persons carrying out the Contract. The Contractor shall not permit employment of unfit persons or persons not skilled in tasks assigned to them.

3.6 The Contractor warrants to the Owner that materials and equipment furnished will be new and of good quality, unless otherwise permitted, and that the work will be free from defects and in conformance with the Contract Documents. Work not conforming to these requirements, including substitutions not properly approved, may be considered defective. If required by the Owner, the Contractor shall furnish evidence as to the kind and quality of materials and equipment provided.

3.7 Unless otherwise provided, the Contractor shall pay all sales, consumer, use and other similar taxes, and shall secure and pay for required permits, fees, licenses, and inspections necessary for proper execution of the Work.

3.8 The Contractor shall comply with and give notices required by laws, ordinances, rules, regulations, and lawful orders of public authorities bearing on performance of the Work. The Contractor shall promptly notify the Owner if the Drawings and Specifications are observed to be at variance therewith.

3.9 The Contractor shall be responsible to the Owner for the acts and omissions of the Contractor's employees, Subcontractors and their agents and employees, and other persons performing portions of the Work under contract with the Contractor.

3.10 The Contractor shall keep the premises and surrounding area free from accumulation of waste materials or rubbish caused by operations under the Contract. At completion of the Work the Contractor shall remove from and about the Project all waste materials, rubbish, the Contractor's tools, construction equipment, machinery and surplus materials. The Contractor shall be responsible for returning all damaged areas to their original conditions.

3.11 STATE LICENSE AND TAX REQUIREMENTS

3.11.1 Each Contractor and Subcontractor shall be licensed to do business in the State of Delaware and shall pay all fees and taxes due under State laws. In conformance with Section 2503,

NOT FOR BID

Chapter 25, Title 30, Delaware Code, "the Contractor shall furnish the Delaware Department of Finance within ten (10) days after entering into any contract with a contractor or subcontractor not a resident of this State, a statement of total value of such contract or contracts together with the names and addresses of the contracting parties."

3.12 The Contractor shall comply with all requirements set forth in Section 6962, Chapter 69, Title 29 of the Delaware Code.

3.13 During the contract Work, the Contractor and each listed Subcontractor, shall implement an Employee Drug Testing Program in accordance with OMB Regulation 4104- "Regulations for the Drug Testing of Contractor and Subcontractor Employees Working on "Large Public Works Projects". "Large Public Works" is based upon the current threshold required for bidding Public Works as set by the Purchasing and Contracting Advisory Council.

ARTICLE 4: ADMINISTRATION OF THE CONTRACT

4.1 CONTRACT SURETY

4.1.1 PERFORMANCE BOND AND LABOR AND MATERIAL PAYMENT BOND

4.1.2 All bonds will be required as follows unless specifically waived elsewhere in the Bidding Documents.

4.1.3 Contents of Performance Bonds – The bond shall be in the form approved by the Office of Management and Budget. The bond shall be conditioned upon the faithful compliance and performance by the successful bidder of each and every term and condition of the contract and the proposal, plans, specifications, and bid documents thereof. Each term and condition shall be met at the time and in the manner prescribed by the Contract, Bid documents and the specifications, including the payment in full to every person furnishing materiel or performing labor in the performance of the Contract, of all sums of money due the person for such labor and material. (The bond shall also contain the successful bidder's guarantee to indemnify and save harmless the State and the agency from all costs, damages and expenses growing out of or by reason of the Contract in accordance with the Contract.)

4.1.4 Invoking a Performance Bond – The agency may, when it considers that the interest of the State so require, cause judgement to be confessed upon the bond.

4.1.5 Within twenty (20) days after the date of notice of award of contract, the Bidder to whom the award is made shall furnish a Performance Bond and Labor and Material Payment Bond, each equal to the full amount of the Contract price to guarantee the faithful performance of all terms, covenants and conditions of the same. The bonds are to be issued by an acceptable Bonding Company licensed to do business in the State of Delaware and shall be issued in duplicate.

4.1.6 Performance and Payment Bonds shall be maintained in full force (warranty bond) for a period of two (2) years after the date of the Certificate for Final Payment. The Performance Bond shall guarantee the satisfactory completion of the Project and that the Contractor will make good any faults or defects in his work which may develop during the period of said guarantees as a result of improper or defective workmanship, material or apparatus, whether furnished by themselves or their Sub-Contractors. The Payment Bond shall guarantee that the Contractor

NOT FOR BID

shall pay in full all persons, firms or corporations who furnish labor or material or both labor and material for, or on account of, the work included herein. The bonds shall be paid for by this Contractor. The Owner shall have the right to demand that the proof parties signing the bonds are duly authorized to do so.

4.2 FAILURE TO COMPLY WITH CONTRACT

4.2.1 If any firm entering into a contract with the State or Agency that neglects or refuses to perform or fails to comply with the terms thereof, the Agency which signed the Contract may terminate the Contract and proceed forward a new contract in accordance with this Chapter 69, Title 29 of the Delaware Code or may require the Surety on the Performance Bond to complete the Contract in accordance with the terms of the Performance Bond. Nothing herein shall preclude the Agency from pursuing additional remedies as otherwise provided by law.

4.3 CONTRACT INSURANCE AND CONTRACT LIABILITY

4.3.1 In addition to the bond requirements stated in the Bid Documents, each successful Bidder shall purchase adequate insurance for the performance of the Contract and, by submission of a Bid, agrees to indemnify and save harmless and to defend all legal or equitable actions brought against the State, any Agency, officer and/or employee of the State, for and from all claims of liability which is or may be the result of the successful Bidder's actions during the performance of the Contract.

4.3.2 The purchase or nonpurchase of such insurance or the involvement of the successful Bidder in any legal or equitable defense of any action brought against the successful Bidder based upon work performed pursuant to the Contract will not waive any defense which the State, its agencies and their respective officers, employees and agents might otherwise have against such claims, specifically including the defense of sovereign immunity, where applicable, and by the terms of this section, the State and all agencies, officers and employees thereof shall not be financially responsible for the consequences of work performed, pursuant to said contract.

4.4 RIGHT TO AUDIT RECORDS

4.4.1 The Owner shall have the right to audit the books and records of a Contractor or any Subcontractor under any Contract or Subcontract to the extent that the books and records relate to the performance of the Contract or Subcontract.

4.4.2 Said books and records shall be maintained by the Contractor for a period of seven (7) years from the date of final payment under the Prime Contract and by the Subcontractor for a period of seven (7) years from the date of final payment under the Subcontract.

ARTICLE 5: SUBCONTRACTORS

5.1 SUBCONTRACTING REQUIREMENTS

NOT FOR BID

5.1.1 All contracts for the construction, reconstruction, alteration or repair of any public building (not a road, street or highway) shall be subject to the following provisions:

1. A contract shall be awarded only to a Bidder whose Bid is accompanied by a statement containing, for each Subcontractor category, the name and address (city or town and State only – street number and P.O. Box addresses not required) of the subcontractor whose services the Bidder intends to use in performing the Work and providing the material for such Subcontractor category.

2. A Bid will not be accepted nor will an award of any Contract be made to any Bidder which, as the Prime Contractor, has listed itself as the Subcontractor for any Subcontractor unless:

   A. It has been established to the satisfaction of the awarding Agency that the Bidder has customarily performed the specialty work of such Subcontractor category by artisans regularly employed by the Bidder's firm;

   B. That the Bidder is duly licensed by the State to engage in such specialty work, if the State requires licenses; and

   C. That the Bidder is recognized in the industry as a bona fide Subcontractor or Contractor in such specialty work and Subcontractor category.

5.1.2 The decision of the awarding Agency as to whether a Bidder who list itself as the Subcontractor for a Subcontractor category shall be final and binding upon all Bidders, and no action of any nature shall lie against any awarding agency or its employees or officers because of its decision in this regard.

5.1.3 After such a Contract has been awarded, the successful Bidder shall not substitute another Subcontractor for any Subcontractor whose name was set forth in the statement which accompanied the Bid without the written consent of the awarding Agency.

5.1.4 No Agency shall consent to any substitution of Subcontractors unless the Agency is satisfied that the Subcontractor whose name is on the Bidders accompanying statement:

A. Is unqualified to perform the work required;

B. Has failed to execute a timely reasonable Subcontract;

C. Has defaulted in the performance on the portion of the work covered by the Subcontract; or

D. Is no longer engaged in such business.

5.1.5 Should a Bidder be awarded a contract, such successful Bidder shall provide to the agency the taxpayer identification license numbers of such subcontractors. Such numbers shall be provided on the later of the date on which such subcontractor is required to be identified or

NOT FOR BID

the time the contract is executed. The successful Bidder shall provide to the agency to which it is contracting, within 30 days of entering into such public works contract, copies of all Delaware Business licenses of subcontractors and/or independent contractors that will perform work for such public works contract. However, if a subcontractor or independent contractor is hired or contracted more than 20 days after the Bidder entered the public works contract the Delaware Business license of such subcontractor or independent contractor shall be provided to the agency within 10 days of being contracted or hired.

5.2 PENALTY FOR SUBSTITUTION OF SUBCONTRACTORS

5.2.1 Should the Contractor fail to utilize any or all of the Subcontractors in the Contractor's Bid statement in the performance of the Work on the public bidding, the Contractor shall be penalized in the amount of (project specific amount*). The Agency may determine to deduct payments of the penalty from the Contractor or have the amount paid directly to the Agency. Any penalty amount assessed against the Contractor may be remitted or refunded, in whole or in part, by the Agency awarding the Contract, only if it is established to the satisfaction of the Agency that the Subcontractor in question has defaulted or is no longer engaged in such business. No claim for the remission or refund of any penalty shall be granted unless an application is filed within one year after the liability of the successful Bidder accrues. All penalty amounts assessed and not refunded or remitted to the contractor shall be reverted to the State.

*one (1) percent of contract amount not to exceed $10,000

5.3 ASBESTOS ABATEMENT

5.3.1 The selection of any Contractor to perform asbestos abatement for State-funded projects shall be approved by the Office of Management and Budget, Division of Facilities Management pursuant to Chapter 78 of Title 16.

5.4 STANDARDS OF CONSTRUCTION FOR THE PROTECTION OF THE PHYSICALLY HANDICAPPED

5.4.1 All Contracts shall conform with the standard established by the Delaware Architectural Accessibility Board unless otherwise exempted by the Board.

5.5 CONTRACT PERFORMANCE

5.5.1 Any firm entering into a Public Works Contract that neglects or refuses to perform or fails to comply with its terms, the Agency may terminate the Contract and proceed to award a new Contract or may require the Surety on the Performance Bond to complete the Contract in accordance with the terms of the Performance Bond.

ARTICLE 6: CONSTRUCTION BY OWNER OR SEPARATE CONTRACTORS

6.1 The Owner reserves the right to simultaneously perform other construction or operations related to the Project with the Owner's own forces, and to award separate contracts in connection with other portions of the Project or other Projects at the same site.

NOT FOR BID

6.2 The Contractor shall afford the Owner and other Contractors reasonable opportunity for access and storage of materials and equipment, and for the performance of their activities, and shall connect and coordinate their activities with other forces as required by the Contract Documents.

ARTICLE 7: CHANGES IN THE WORK

7.1 The Owner, without invalidating the Contract, may order changes in the Work consisting of Additions, Deletions, Modifications or Substitutions, with the Contract Sum and Contract completion date being adjusted accordingly. Such changes in the Work shall be authorized by written Change Order signed by the Professional, as the duly authorized agent, the Contractor and the Owner.

7.2 The Contract Sum and Contract Completion Date shall be adjusted only by a fully executed Change Order.

7.3 The additional cost or credit to the Owner resulting from a change in the Work shall be by mutual agreement of the Owner, Contractor and the Architect. In all cases, this cost or credit shall be based on the 'DPE' wages required and the "invoice price" of the materials/equipment needed.

7.3.1 "DPE" shall be defined to mean "direct personnel expense". Direct payroll expense includes direct salary plus customary fringe benefits (prevailing wage rates) and documented statutory costs such as workman's compensation insurance, Social Security/Medicare, and unemployment insurance (a maximum multiplier of 1.35 times DPE).

7.3.2 "Invoice price" of materials/equipment shall be defined to mean the actual cost of materials and/or equipment that is paid by the Contractor, (or subcontractor), to a material distributor, direct factory vendor, store, material provider, or equipment leasing entity. Rates for equipment that is leased and/or owned by the Contractor or subcontractor(s) shall not exceed those listed in the latest version of the "Means Building Construction Cost Data" publication.

7.3.3 In addition to the above, the General Contractor is allowed a fifteen percent (15%) markup for overhead and profit for additional work performed by the General Contractor's own forces. For additional subcontractor work, the Subcontractor is allowed a fifteen (15) percent overhead and profit on change order work above and beyond the direct costs stated previously. To this amount, the General Contractor will be allowed a mark-up not exceeding seven and one half percent (7.5%) on the subcontractors work. These mark-ups shall include all costs including, but not limited to: overhead, profit, bonds, insurance, supervision, etc. No markup is permitted on the work of the subcontractors subcontractor. No additional costs shall be allowed for changes related to the Contractor's onsite superintendent/staff, or project manager, unless a change in the work changes the project duration and is identified by the CPM schedule. There will be no other costs associated with the change order.

ARTICLE 8: TIME

NOT FOR BID

NOT FOR BID

8.1 Time limits, if any, are as stated in the Project Manual. By executing the Agreement, the Contractor confirms that the stipulated limits are reasonable, and that the Work will be completed within the anticipated time frame.

8.2 If progress of the Work is delayed at any time by changes ordered by the Owner, by labor disputes, fire, unusual delay in deliveries, abnormal adverse weather conditions, unavoidable casualties or other causes beyond the Contractor's control, the Contract Time shall be extended for such reasonable time as the Owner may determine.

8.3 Any extension of time beyond the date fixed for completion of the construction and acceptance of any part of the Work called for by the Contract, or the occupancy of the building by the Owner, in whole or in part, previous to the completion shall not be deemed a waiver by the Owner of his right to annul or terminate the Contract for abandonment or delay in the matter provided for, nor relieve the Contractor of full responsibility.

8.4 SUSPENSION AND DEBARMENT

8.4.1 Per Section 6962(d)(14), Title 29, Delaware Code, "Any Contractor who fails to perform a public works contract or complete a public works project within the time schedule established by the Agency in the Invitation To Bid, may be subject to Suspension or Debarment for one or more of the following reasons: a) failure to supply the adequate labor supply ratio for the project; b) inadequate financial resources; or, c) poor performance on the Project."

8.4.2 "Upon such failure for any of the above stated reasons, the Agency that contracted for the public works project may petition the Director of the Office of Management and Budget for Suspension or Debarment of the Contractor. The Agency shall send a copy of the petition to the Contractor within three (3) working days of filing with the Director. If the Director concludes that the petition has merit, the Director shall schedule and hold a hearing to determine whether to suspend the Contractor, debar the Contractor or deny the petition. The Agency shall have the burden of proving, by a preponderance of the evidence, that the Contractor failed to perform or complete the public works project within the time schedule established by the Agency and failed to do so for one or more of the following reasons: a) failure to supply the adequate labor supply ratio for the project; b) inadequate financial resources; or, c) poor performance on the project. Upon a finding in favor of the Agency, the Director may suspend a Contractor from Bidding on any project funded, in whole or in part, with public funds for up to 1 year for a first offense, up to 3 years for a second offense and permanently debar the Contractor for a third offense. The Director shall issue a written decision and shall send a copy to the Contractor and the Agency. Such decision may be appealed to the Superior Court within thirty (30) days for a review on the record."

8.5 RETAINAGE

8.5.1 Per Section 6962(d)(5) a.3, Title 29, Delaware Code: The Agency may at the beginning of each public works project establish a time schedule for the completion of the project. If the project is delayed beyond the completion date due to the Contractor's failure to meet their responsibilities, the Agency may forfeit, at its discretion, all or part of the Contractor's retainage.

8.5.2 This forfeiture of retainage also applies to the timely completion of the punchlist. A punchlist will only be prepared upon the mutual agreement of the Owner, Architect and Contractor. Once the punchlist is prepared, all three parties will by mutual agreement, establish a schedule for its completion. Should completion of the punchlist be delayed beyond the established date due to the Contractor's failure to meet their responsibilities, the Agency may hold permanently, at its discretion, all or part of the Contractor's retainage.

ARTICLE 9: PAYMENTS AND COMPLETION

9.1 APPLICATION FOR PAYMENT

9.1.1 Applications for payment shall be made upon AIA Document G702. There will be a five percent (5%) retainage on all Contractor's monthly invoices until completion of the project. This retainage may become payable upon receipt of all required closeout documentation, provided all other requirements of the Contract Documents have been met.

9.1.2 A date will be fixed for the taking of the monthly account of work done. Upon receipt of Contractor's itemized application for payment, such application will be audited, modified, if found necessary, and approved for the amount. Statement shall be submitted to the Owner.

9.1.3 Section 6516, Title 29 of the Delaware Code annualized interest is not to exceed 12% per annum beginning thirty (30) days after the "presentment" (as opposed to the date) of the invoice.

NOT FOR BID

9.2 PARTIAL PAYMENTS

9.2.1 Any public works Contract executed by any Agency may provide for partial payments at the option of the Owner with respect to materials placed along or upon the sites or stored at secured locations, which are suitable for use in the performance of the contract.

9.2.2 When approved by the agency, partial payments may include the values of tested and acceptable materials of a nonperishable or noncontaminative nature which have been produced or furnished for incorporation as a permanent part of the work yet to be completed, provided acceptable provisions have been made for storage.

9.2.2.1 Any allowance made for materials on hand will not exceed the delivered cost of the materials as verified by invoices furnished by the Contractor, nor will it exceed the contract bid price for the material complete in place.

9.2.3 If requested by the Agency, receipted bills from all Contractors, Subcontractors, and material, men, etc., for the previous payment must accompany each application for payment. Following such a request, no payment will be made until these receipted bills have been received by the Owner.

9.3 SUBSTANTIAL COMPLETION

9.3.1 When the building has been made suitable for occupancy, but still requires small items of miscellaneous work, the Owner will determine the date when the project has been substantially completed.

9.3.2 If, after the Work has been substantially completed, full completion thereof is materially delayed through no fault of the Contractor, and without terminating the Contract, the Owner may make payment of the balance due for the portion of the Work fully completed and accepted. Such payment shall be made under the terms and conditions governing final payment that it shall not constitute a waiver of claims.

9.3.3 On projects where commissioning is included, the commissioning work as defined in the specifications must be complete prior to the issuance of substantial completion.

9.4 FINAL PAYMENT

9.4.1 Final payment, including the five percent (5%) retainage if determined appropriate, shall be made within thirty (30) days after the Work is fully completed and the Contract fully performed and provided that the Contractor has submitted the following closeout documentation (in addition to any other documentation required elsewhere in the Contract Documents):

9.4.1.1 Evidence satisfactory to the Owner that all payrolls, material bills, and other indebtedness connected with the work have been paid,

9.4.1.2 An acceptable RELEASE OF LIENS,

NOT FOR BID

9.4.1.3 Copies of all applicable warranties,

9.4.1.4 As-built drawings,

9.4.1.5 Operations and Maintenance Manuals,

9.4.1.6 Instruction Manuals,

9.4.1.7 Consent of Surety to final payment.

9.4.1.8 The Owner reserves the right to retain payments, or parts thereof, for its protection until the foregoing conditions have been complied with, defective work corrected and all unsatisfactory conditions remedied.

NOT FOR BID

ARTICLE 10: PROTECTION OF PERSONS AND PROPERTY

10.1 The Contractor shall be responsible for initiating, maintaining, and supervising all safety precautions and programs in connection with the performance of the Contract. The Contractor shall take all reasonable precautions to prevent damage, injury or loss to: workers, persons nearby who may be affected, the Work, materials and equipment to be incorporated, and existing property at the site or adjacent thereto. The Contractor shall give notices and comply with applicable laws ordinances, rules regulations, and lawful orders of public authorities bearing on the safety of persons and property and their protection from injury, damage, or loss. The Contractor shall promptly remedy damage and loss to property at the site caused in whole or in part by the Contractor, a Subcontractor, or anyone directly or indirectly employed by any of them, or by anyone for whose acts they may be liable.

10.2 The Contractor shall notify the Owner in the event any existing hazardous material such as lead, PCBs, asbestos, etc. is encountered on the project. The Owner will arrange with a qualified specialist for the identification, testing, removal, handling and protection against exposure or environmental pollution, to comply with applicable regulation laws and ordinances. The Contractor and Architect will not be required to participate in or to perform this operation. Upon completion of this work, the Owner will notify the Contractor and Architect in writing the area has been cleared and approved by the authorities in order for the work to proceed. The Contractor shall attach documentation from the authorities of said approval.

10.3 As required in the Hazardous Chemical Information Act of June 1984, all vendors supplying any materials that may be defined as hazardous, must provide Material Safety Data Sheets for those products. Any chemical product should be considered hazardous if it has a warning caution on the label relating to a potential physical or health hazard, if it is known to be present in the work place, and if employees may be exposed under normal conditions or in any foreseeable emergency situation. Material Safety Data Sheets <u>must</u> be provided <u>directly to the Owner</u> along with the shipping slips that include those products.

10.4 The Contractor shall certify to the Owner that materials incorporated into the Work are free of all asbestos. This certification may be in the form of Material Safety Data Sheet (MSDS)

provided by the product manufacturer for the materials used in construction, as specified or as provided by the Contractor.

ARTICLE 11: INSURANCE AND BONDS

11.1 The Contractor shall carry all insurance required by law, such as Unemployment Insurance, etc. The Contractor shall carry such insurance coverage as they desire on their own property such as a field office, storage sheds or other structures erected upon the project site that belong to them and for their own use. The Subcontractors involved with this project shall carry whatever insurance protection they consider necessary to cover the loss of any of their personal property, etc.

11.2 Upon being awarded the Contract, the Contractor shall obtain a minimum of two (2) copies of all required insurance certificates called for herein, and submit one (1) copy of each certificate, to the Owner, within 20 days of contract award.

11.3 Bodily Injury Liability and Property Damage Liability Insurance shall, in addition to the coverage included herein, include coverage for injury to or destruction of any property arising out of the collapse of or structural injury to any building or structure due to demolition work and evidence of these coverages shall be filed with and approved by the Owner.

11.4 The Contractor's Property Damage Liability Insurance shall, in addition to the coverage noted herein, include coverage on all real and personal property in their care, custody and control damaged in any way by the Contractor or their Subcontractors during the entire construction period on this project.

11.5 Builders Risk (including Standard Extended Coverage Insurance) on the existing building during the entire construction period, shall not be provided by the Contractor under this contract. The Owner shall insure the existing building and all of its contents and all this new alteration work under this contract during entire construction period for the full insurable value of the entire work at the site. Note, however, that the Contractor and their Subcontractors shall be responsible for insuring building materials (installed and stored) and their tools and equipment whenever in use on the project, against fire damage, theft, vandalism, etc.

11.6 Certificates of the insurance company or companies stating the amount and type of coverage, terms of policies, etc., shall be furnished to the Owner, within 20 days of contract award.

11.7 The Contractor shall, at their own expense, (in addition to the above) carry the following forms of insurance:

11.7.1 <u>Contractor's Contractual Liability Insurance</u>

Minimum coverage to be:

Bodily Injury	$500,000	for each person
	$1,000,000	for each occurrence
	$1,000,000	aggregate

NOT FOR BID

Property Damage	$500,000	for each occurrence
	$1,000,000	aggregate

11.7.2 Contractor's Protective Liability Insurance

Minimum coverage to be:

Bodily Injury	$500,000	for each person
	$1,000,000	for each occurrence
	$1,000,000	aggregate
Property Damage	$500,000	for each occurrence
	$500,000	aggregate

11.7.3 Automobile Liability Insurance

Minimum coverage to be:

Bodily Injury	$1,000,000	for each person
	$1,000,000	for each occurrence
Property Damage	$500,000	per accident

NOT FOR BID

11.7.4 Prime Contractor's and Subcontractors' policies shall include contingent and contractual liability coverage in the same minimum amounts as 11.7.1 above.

11.7.5 Workmen's Compensation (including Employer's Liability):

11.7.5.1 Minimum Limit on employer's liability to be as required by law.

11.7.5.2 Minimum Limit for all employees working at one site.

11.7.6 Certificates of Insurance must be filed with the Owner guaranteeing fifteen (15) days prior notice of cancellation, non-renewal, or any change in coverages and limits of liability shown as included on certificates.

11.7.7 Social Security Liability

11.7.7.1 With respect to all persons at any time employed by or on the payroll of the Contractor or performing any work for or on their behalf, or in connection with or arising out of the Contractor's business, the Contractor shall accept full and exclusive liability for the payment of any and all contributions or taxes or unemployment insurance, or old age retirement benefits, pensions or annuities now or hereafter imposed by the Government of the United States and the State or political subdivision thereof, whether the same be measured by wages, salaries or other remuneration paid to such persons or otherwise.

11.7.7.2 Upon request, the Contractor shall furnish Owner such information on payrolls or employment records as may be necessary to enable it to fully comply with the law imposing the aforesaid contributions or taxes.

11.7.7.3 If the Owner is required by law to and does pay any and/or all of the aforesaid contributions or taxes, the Contractor shall forthwith reimburse the Owner for the entire amount so paid by the Owner.

NOT FOR BID

ARTICLE 12: UNCOVERING AND CORRECTION OF WORK

12.1 The Contractor shall promptly correct work rejected by the Owner or failing to conform to the requirements of the Contract Documents, whether observed before or after Substantial Completion and whether or not fabricated, installed or completed, and shall correct any Work found to be not in accordance with the requirements of the Contract Documents within a period of two years from the date of Substantial Completion, or by terms of an applicable special warranty required by the Contract Documents. The provisions of this Article apply to work done by Subcontractors as well as to Work done by direct employees of the Contractor.

12.2 At any time during the progress of the work, or in any case where the nature of the defects shall be such that it is not expedient to have them corrected, the Owner, at their option, shall have the right to deduct such sum, or sums, of money from the amount of the contract as they consider justified to adjust the difference in value between the defective work and that required under contract including any damage to the structure.

ARTICLE 13: MISCELLANEOUS PROVISIONS

13.1 CUTTING AND PATCHING

13.1.1 The Contractor shall be responsible for all cutting and patching. The Contractor shall coordinate the work of the various trades involved.

13.2 DIMENSIONS

13.2.1 All dimensions shown shall be verified by the Contractor by actual measurements at the project site. Any discrepancies between the drawings and specifications and the existing conditions shall be referred to the Owner for adjustment before any work affected thereby has been performed.

13.3 LABORATORY TESTS

13.3.1 Any specified laboratory tests of material and finished articles to be incorporated in the work shall be made by bureaus, laboratories or agencies approved by the Owner and reports of such tests shall be submitted to the Owner. The cost of the testing shall be paid for by the Contractor.

13.3.2 The Contractor shall furnish all sample materials required for these tests and shall deliver same without charge to the testing laboratory or other designated agency when and where directed by the Owner.

13.4 ARCHAEOLOGICAL EVIDENCE

13.4.1 Whenever, in the course of construction, any archaeological evidence is encountered on the surface or below the surface of the ground, the Contractor shall notify the authorities of the Delaware Archaeological Board and suspend work in the immediate area for a reasonable time to permit those authorities, or persons designated by them, to examine the area and ensure the proper removal of the archaeological evidence for suitable preservation in the State Museum.

13.5 GLASS REPLACEMENT AND CLEANING

13.5.1 The General Contractor shall replace without expense to the Owner all glass broken during the construction of the project. If job conditions warrant, at completion of the job the General Contractor shall have all glass cleaned and polished.

13.6 WARRANTY

13.6.1 For a period of two (2) years from the date of substantial completion, as evidenced by the date of final acceptance of the work, the contractor warrants that work performed under this contract conforms to the contract requirements and is free of any defect of equipment, material or workmanship performed by the contractor or any of his subcontractors or suppliers. However, manufacturer's warranties and guarantees, if for a period longer than two (2) years, shall take precedence over the above warranties. The contractor shall remedy, at his own expense, any such failure to conform or any such defect. The protection of this warranty shall be included in the Contractor's Performance Bond.

ARTICLE 14: TERMINATION OF CONTRACT

14.1 If the Contractor defaults or persistently fails or neglects to carry out the Work in accordance with the Contract Documents or fails to perform a provision of the Contract, the Owner, after seven days written notice to the Contractor, may make good such deficiencies and may deduct the cost thereof from the payment then or thereafter due the Contractor. Alternatively, at the Owner's option, and the Owner may terminate the Contract and take possession of the site and of all materials, equipment, tools, and machinery thereon owned by the Contractor and may finish the Work by whatever method the Owner may deem expedient. If the costs of finishing the Work exceed any unpaid compensation due the Contractor, the Contractor shall pay the difference to the Owner.

14.2 "If the continuation of this Agreement is contingent upon the appropriation of adequate state, or federal funds, this Agreement may be terminated on the date beginning on the first fiscal year for which funds are not appropriated or at the exhaustion of the appropriation. The Owner may terminate this Agreement by providing written notice to the parties of such non-appropriation. All payment obligations of the Owner will cease upon the date of termination. Notwithstanding the foregoing, the Owner agrees that it will use its best efforts to obtain approval of necessary funds to continue the Agreement by taking appropriate action to request adequate funds to continue the Agreement."

NOT FOR BID

EMPLOYEE DRUG TESTING REPORT FORM
Period Ending:_____

4104 Regulations for the Drug Testing of Contractor and Subcontractor Employees Working on Large Public Works Projects requires that Contractors and Subcontractors who work on Large Public Works Contracts funded all or in part with public funds submit Testing Report Forms to the Owner no less than quarterly.

NOT FOR BID

Project Number: _____

Project Name: _____

Contractor/Subcontractor Name: _____

Contractor/Subcontractor Address: _____
_____
_____

Number of employees who worked on the jobsite during the report period:_____

Number of employees subject to random testing during the report period:_____

Number of Negative Results _____ Number of Positive Results _____

Action taken on employee(s) in response to a failed or positive random test:
_____
_____
_____

Authorized Representative of Contractor/Subcontractor: _____
(typed or printed)

Authorized Representative of Contractor/Subcontractor: _____
(signature)

Date: _____

EMPLOYEE DRUG TESTING
REPORT OF POSITIVE RESULTS

4104 Regulations for the Drug Testing of Contractor and Subcontractor Employees Working on Large Public Works Projects requires that Contractors and Subcontractors who work on Large Public Works Contracts funded all or in part with public funds to notify the Owner in writing of a positive random drug test.

NOT FOR BID

Project Number: _____

Project Name: _____

Contractor/Subcontractor Name: _____

Contractor/Subcontractor Address: _____
_____
_____

Name of employee with positive test result:_____

Last 4 digits of employee SSN: _____

Date test results received:_____

Action taken on employee in response to a positive test result:
_____
_____
_____

Authorized Representative of Contractor/Subcontractor: _____
(typed or printed)

Authorized Representative of Contractor/Subcontractor: _____
(signature)

Date: _____

This form shall be sent by mail to the Owner within 24 hours of receipt of test results.

Enclose this test results form in a sealed envelope with the notation "Drug Testing Form – DO NOT OPEN" on the face thereof and place in a separate mailing envelope.

NOT FOR BID

SECTION 011000 – SUMMARY

PART 1 - GENERAL

1.1 RELATED DOCUMENTS

A. Drawings and general provisions of the Contract, including General and Supplementary Conditions and other Division 01 Specification Sections, apply to this Section.

1.2 SUMMARY

A. Section Includes:

1. Project information.
2. Work covered by Contract Documents.
3. Work under separate contract.
4. Allowances.
5. Alternates.
6. Unit Prices.
7. Applications for Payment.
8. Owner Supplied Construction Documents.
9. Coordination.
10. Phased construction.
11. Access to site.
12. Coordination with occupants.
13. Work restrictions.
14. Specification and drawing conventions.
15. Field Engineering.
16. References and Standards.
17. Miscellaneous provisions.

B. Related Requirements:

1. Section 015000 "Temporary Facilities and Controls" for limitations and procedures governing temporary use of Owner's facilities.

1.3 PROJECT INFORMATION

A. Project Identification: Tri-Valley Trail, Phase II.

1. Project Location: Newark, Delaware 19711.

B. Owner: State of Delaware, Division of Natural Resources and Environmental Control, Parks and Recreation, 89 Kings Highway, Dove DE 19901.

C. Architect/Engineer's Identification: The Contract Documents, dated TRI-VALLEY TRAIL, PHASE II, were prepared for this Project by Century Engineering, Inc.

NOT FOR BID

1.4 WORK COVERED BY CONTRACT DOCUMENTS

A. The Work of Project is defined by the Contract Documents and consists of the following:

1. Construction of a new, 5,965+/- long, 8-foot wide asphalt multi-use trail and bridge.

B. Type of Contract:

1. Project will be constructed under a single, lump sum prime contract.

1.5 WORK UNDER SEPARATE CONTRACTS

A. General: Cooperate fully with separate contractors so work on those contracts may be carried out smoothly, without interfering with or delaying work under this Contract or other contracts. Coordinate the Work of this Contract with work performed under separate contracts as it will have an impact on the General Contractor's scope of work. The General Contractor shall allow the separate contractors access to scaffolding and/or high reaches.

1. An archeological survey has been completed by the State for this project. No hazardous material abatement is anticipated for this project.
2. Items noted "NIC" (Not in Contract) will be furnished and installed by others.

1.6 UNIT PRICES

A. Unit Prices quoted on the Bid form will be exercised as Owner option.

B. Coordinate related work and modify surrounding work affected by accepted unit prices as required to complete the Work.

C. Schedule of Unit Prices: Refer to Section 012200 Unit Prices.

1.7 APPLICATIONS FOR PAYMENT

A. Submit three (3) originals of each application under procedures of Section 012900 Payment Procedures.

B. Content and Format: Use the Project Manual table of contents to develop the Schedule of Values.

NOT FOR BID

1.8 OWNER SUPPLIED CONSTRUCTION DOCUMENTS

A. The Contractor will be furnished, free of charge, five (5) copies of the drawings and Project Manuals (or less if requested). Additional sets will be furnished at the cost of reproduction, postage and handling.

1.9 COORDINATION

A. Coordinate Work of the various sections of Specifications to assure efficient and orderly sequence of installation of construction elements, with provisions for accommodating items installed later.

B. Verify characteristics of elements of interrelated operating equipment are compatible; coordinate Work of various sections having interdependent responsibilities for installing, connecting to, and placing in service, such equipment.

C. Coordinate space requirements and installation of mechanical, electrical and plumbing work which are indicated diagrammatically on Drawings. Follow routing shown for pipes, ducts, and conduits, as closely as practicable; make runs parallel with lines of building. Utilize spaces efficiently to maximize accessibility for other installations, for maintenance, and for repairs.

D. In finished areas (except as otherwise shown), conceal pipes, ducts, and wiring in the construction. Coordinate locations of fixtures and outlets with finish elements.

E. Execute cutting and patching to integrate elements of Work, uncover ill-timed defective and non-conforming work, provide openings for penetrations of existing surfaces, and provide samples for testing. Seal penetrations through floors, walls, and ceilings.

1.10 ACCESS TO SITE

A. General: Contractor shall have partial use of Project site for construction operations as indicated on Drawings by the Contract limits and as indicated by requirements of this Section.

B. Use of Site: Limit use of Project site to areas within the Contract limits. Do not disturb portions of Project site beyond areas in which the Work is indicated.

1. Limits: Confine construction operations to the areas as indicated. The site is currently open to the public. The contractor shall barricade the construction areas to prevent access by the public.
2. Driveways, Walkways and Entrances: Keep public roads, public parking, driveways and entrances outside of the work area serving premises clear and available to Owner, Owner's employees, emergency vehicles and general public at all times. Do not use these areas for parking or storage of materials.

   a. Schedule deliveries to minimize use of driveways and entrances by construction operations.

b. Schedule deliveries to minimize space and time requirements for storage of materials and equipment on-site.

3. The adjacent building areas, site and properties are occupied and shall not be disturbed.

NOT FOR BID

1.11 COORDINATION WITH OCCUPANTS

A. Full Owner Occupancy: Owner will occupy site during entire construction period. Cooperate with Owner during construction operations to minimize conflicts and facilitate Owner usage. Perform the Work so as not to interfere with Owner's day-to-day operations. Maintain existing exits unless otherwise indicated.

1. Maintain access to existing walkways, entrances, corridors, stairs and other adjacent occupied or used facilities. Do not close or obstruct walkways, entrances, stairs, corridors, or other occupied or used facilities without written permission from Owner and approval of authorities having jurisdiction. Entrances shall be open for the Owner's use at all times.
2. Barricade work areas to keep the public from entering.
3. Notify Owner not less than one week in advance of activities that will affect Owner's operations.

1.12 WORK RESTRICTIONS

A. Work Restrictions, General: Comply with restrictions on construction operations.

1. Comply with limitations on use of public streets and with other requirements of authorities having jurisdiction.
2. Refer to Section 011400 "Work Restrictions" for additional requirements.

B. On-Site Work Hours: Limit work to the site and/or existing building to normal business working hours of 7:00 a.m. to 5:00 p.m., Monday through Friday, unless otherwise indicated.

1. Weekend Hours: Weekend work shall not be allowed unless preapproved by the Owner.
2. Early Morning Hours: Early morning hours are not allowed unless required for utility shut downs.

C. Noise, Vibration, and Odors: Coordinate operations that may result in any level of noise and vibration, odors, or other disruption to the occupancy or use of adjacent occupied areas, the buildings and adjacent properties with the Owner.

1. Notify Architect and Owner not less than seven (7) days in advance of proposed disruptive operations.
2. Obtain Architect's and/or Owner's written permission before proceeding with disruptive operations.

D. Nonsmoking Campus and Building: Smoking is prohibited within the boundaries of all state workplaces including all buildings, facilities, indoor and outdoor spaces and all the surrounding

grounds owned by the State. This policy also includes but is not limited to parking lots, walkways, State vehicles and private vehicles parked or operated on State workplace property.

NOT FOR BID

1.13 SPECIFICATION AND DRAWING CONVENTIONS

A. Specification Content: The Specifications use certain conventions for the style of language and the intended meaning of certain terms, words, and phrases when used in particular situations. These conventions are as follows:

1. Imperative mood and streamlined language are generally used in the Specifications. The words "shall," "shall be," or "shall comply with," depending on the context, are implied where a colon (:) is used within a sentence or phrase.
2. Specification requirements are to be performed by Contractor unless specifically stated otherwise.

B. Division 01 General Requirements: Requirements of Sections in Division 01 apply to the Work of all Sections in the Specifications.

C. Drawing Coordination: Requirements for materials and products identified on Drawings are described in detail in the Specifications. One or more of the following are used on Drawings to identify materials and products:

1. Terminology: Materials and products are identified by the typical generic terms used in the individual Specifications Sections.
2. Abbreviations: Materials and products are identified by abbreviations published as part of the U.S. National CAD Standard and scheduled on Drawings.
3. Keynoting: Materials and products are identified by reference keynotes referencing Specification Section numbers found in this Project Manual.

1.14 FIELD ENGINEERING

A. Provide field engineering services; establish grades, lines, and levels, by use of recognized engineering survey practices.

B. Control datum for survey is that shown on drawings. Locate and protect control and reference points.

1.15 REFERENCES AND STANDARDS

A. For products specified by association or trade standards, comply with requirements of the standard, except when more rigid requirements are specified or are required by applicable codes.

B. The date of the standard is that in effect as of the Bid date, except when a specific date is specified.

C. Obtain copies of standards when required by Contract Documents. Maintain copy at job site during progress of the specific work.

1.16 MISCELLANEOUS PROVISIONS

A. SCHEDULE

1. The following is the required schedule for this work:

a. Bids Due: August 8, 2018, @ 2:00 pm
b. Notice of Building Contract Award: Within thirty (30) days of receipt and acceptance of qualified low bid.
c. Purchase Order Issuance: The issuance of a State of Delaware purchase order is contingent upon the successful Contractor submitting bonds on State-approved forms, signed contracts and insurance certificates to the State of Delaware within 20 days of Notice of Award. A purchase order will be issued in approximately 30 days after these items have been submitted to the State of Delaware.
d. On-Site Mobilization: Upon receipt of State of Delaware purchase order.
e. Substantial Completion: The work shall be completed shall be completed **240 calendar days** from on-site start of work.
f. Completion of Punch List: 21 days from date of substantial completion.

1) Refer to the General Requirements for additional details.

NOT FOR BID

PART 2 - PRODUCTS (Not Used)

PART 3 - EXECUTION (Not Used)

END OF SECTION 011000

NOT FOR BID

SECTION 011400 - WORK RESTRICTIONS

PART 1 - GENERAL

1.1 RELATED DOCUMENTS

A. Drawings and general provisions of the Contract, including General and Supplementary Conditions and other Division 1 Specification Sections, apply to this Section.

1.2 USE OF PREMISES

A. Use of Site: Limit use of premises to work in areas indicated. Do not disturb portions of site beyond areas in which the Work is indicated.

1. Limits: Confine construction operations to the limits indicated on the drawings. Do not disturb areas to remain occupied during the renovations.
2. Owner Occupancy: The surrounding occupied areas, site, buildings, roadways, access into the buildings, etc. beyond the work area shall remain accessible to the Owner.
3. Parking: Parking shall not be allowed on or along state maintained roadways. Parking shall be permitted in paved parking lots within the State Park, and at staging areas designated on the construction plans. No parking shall be allowed on unpaved areas of the park, except as noted above.
4. Dumpster: Dumpsters shall only be allowed in the staging areas designated on the construction plans. The dumpster shall be covered to avoid windblown debris. Debris shall be removed on a regular basis in order to avoid an overflowing dumpster. Restoration of grounds disturbed by the dumpster will be required upon completion of the Project. “No Trespassing” signs shall be placed on the dumpster.
5. Access: Access to the construction site shall only be allowed at locations indicated on the contract plans.
6. Storage: Material and equipment storage shall only be allowed at staging areas designated on the contract plans.
7. Public Roadways, Driveways, Entrances and Public Sidewalks: Keep public roadways, driveways, entrances and public sidewalks serving premises clear and available to the Public, Owner, Owner's employees and emergency vehicles at all times. Do not use these areas for parking or storage of materials.

    a. Schedule deliveries to minimize use of roadways, driveways, sidewalks and entrances.
    b. The Owner will not sign for any deliveries at any time.
    c. Schedule deliveries to minimize space and time requirements for storage of materials and equipment on-site.

B. Use of Existing Building: Maintain the existing building in a weathertight condition throughout renovation period. Repair damage caused by construction operations. Protect building and its contents during construction period.

1. The Contractor shall be provided partial access to the Park as necessary to complete the work. A security code and/or keys shall will be / not be provided to the Contractor.
2. Use of the Owner's telephones will not be allowed.
3. Flammable materials shall be kept outside, away from all buildings, in a flammable liquid/material storage box.
4. Gas powered equipment will not be allowed in the buildings or near windows and intake louvers at any time.
5. Debris shall be removed from and around the construction site, including the sidewalks, trails and parking areas on a daily basis.
6. At no times shall equipment be left operating in and around building/site name after hours or when no one is present in the building.
7. Noisy activities shall take place during the hours defined by the County and/or Municipality, and prescheduled with the Owner to avoid disruption of their activities.
8. Access to water will not be provided.
9. There will be no restroom facilities available. The Contractor shall provide a self-contained toilet unit securely attached to the ground and kept locked after hours.
10. Dogs or other animals shall not be brought onto the property at any time.
11. Children shall not be brought onto the site at any time.
12. The general surroundings of the park are open to the public and those working at the site shall not use abusive language.
13. Radios or other music-playing devices will not be allowed. Head phones and ear buds will not be allowed.
14. Fire extinguishers shall be kept in the areas under renovation at the park at all times.
15. All work taking place on the site shall be monitored by the contractor's project superintendent at all times even if the General Contractor's work forces are not working at the site.
16. The Project superintendent shall discuss weekly with the DNREC Project Manager to review the activities planned for that week to avoid miscommunication, facilitate the renovation process and to maintain the Owner's operations.

NOT FOR BID

PART 2 - PRODUCTS (Not Used)

PART 3 - EXECUTION (Not Used)

END OF SECTION 011400

NOT FOR BID

SECTION 012200 - UNIT PRICES

PART 1 - GENERAL

1.1 RELATED DOCUMENTS

A. Drawings and general provisions of the Contract, including General and Supplementary Conditions and other Division 1 Specification Sections, apply to this Section.

1.2 SUMMARY

A. This Section includes administrative and procedural requirements for unit prices.

B. Related Sections include the following:
1. Division 1 Section "Contract Modification Procedures" for procedures for submitting and handling Change Orders.
2. Section 13 [illegible]50, "Helical Screw Foundations."
3. Section 13 29 50, "Prefabricated Pedestrian Bridge."

1.3 DEFINITIONS

A. Unit price is an amount proposed by bidders, stated on the Bid Form, as a price per unit of measurement for materials or services added to or deducted from the Contract Sum by appropriate modification, if estimated quantities of Work required by the Contract Documents are increased or decreased.

1.4 PROCEDURES

A. Unit prices include all necessary material, plus cost for delivery, installation, insurance, applicable taxes, overhead, and profit.

B. Measurement and Payment: Refer to individual Specification Sections for work that requires establishment of unit prices. Methods of measurement and payment for unit prices are specified in those Sections.

C. Owner reserves the right to reject Contractor's measurement of work-in-place that involves use of established unit prices and to have this work measured, at Owner's expense, by an independent surveyor acceptable to Contractor.

D. List of Unit Prices: A list of unit prices is included at the end of this Section. Specification Sections referenced in the schedule contain requirements for materials described under each unit price.

PART 2 - PRODUCTS (Not Used)

PART 3 - EXECUTION

3.1 LIST OF UNIT PRICES

A. Unit Price No. 1 –Prefabricated Pedestrian Bridge.
   1. Description: Provide and install one (1) pre-engineered, prefabricated pedestrian bridge as defined in Section 13 29 50, "Prefabricated Pedestrian Bridge."
   2. Unit of Measurement: Unit (Each)

B. Unit Price No. 2 – Helical Screw Piles.
   1. Description: Provide and install helical screw piles as shown on the Contract Plans, and as defined in Section 13 24 50, "Helical Screw Foundations."
   2. Unit of Measurement: Unit (Each)

C. Unit Price No. 3 – Borrow, Type F.
   1. Description: Provide, install, and compact Type F Borrow only when sufficient amount of on-site Type F Borrow material is not available. Material shall meet the requirements of Section 209 – Borrow, and shall be placed in accordance with Section 202 – Excavation and Embankment, of the DelDOT Standard Specifications. Material suppliers shall be a source preapproved by DelDOT Materials and Research.
   2. Unit of Measurement: Unit (Cubic Yard)

D. Unit Price No. 4 – Disposal of Excess Materials.
   1. Description: Remove and legally dispose of excess and/or undesirable soils, including under cut material, that can not be incorporated into the proposed construction. Price shall cover the cost of loading, hauling, and all labor, materials, and equipment necessary to remove the excess soil. Material shall be disposed of in accordance with Section 106.08 – Disposal of Unacceptable Materials, of the DelDOT Standard Specifications.
   2. Unit of Measurement: Unit (Cubic Yards)

END OF SECTION 012700

NOT FOR BID

NOT FOR BID

SECTION 012300 - ALTERNATES

PART 1 - GENERAL

1.1 RELATED DOCUMENTS

A. Drawings and general provisions of the Contract, including General and Supplementary Conditions and other Division 1 Specification Sections, apply to this Section.

1.2 SUMMARY

A. This Section includes administrative and procedural requirements for alternates.

1.3 DEFINITIONS

A. Alternate: An amount proposed by bidders and stated on the Bid Form for certain work defined in the Bidding Requirements that may be added to or deducted from the Base Bid amount if Owner decides to accept a corresponding change either in the amount of construction to be completed or in the products, materials, equipment, systems, or installation methods described in the Contract Documents.

1. The cost or credit for each alternate is the net addition to or deduction from the Contract Sum to incorporate alternate into the Work. No other adjustments are made to the Contract Sum.

1.4 PROCEDURES

A. Coordination: Modify or adjust affected adjacent work as necessary to completely integrate work of the alternate into Project.

1. Include as part of each alternate, miscellaneous devices, accessory objects, and similar items incidental to or required for a complete installation whether or not indicated as part of alternate.

B. Notification: Immediately following award of the Contract, notify each party involved, in writing, of the status of each alternate. Indicate if alternates have been accepted, rejected, or deferred for later consideration. Include a complete description of negotiated modifications to alternates.

C. Execute accepted alternates under the same conditions as other work of the Contract.

D. Schedule: A Schedule of Alternates is included at the end of this Section. Specification Sections referenced in schedule contain requirements for materials necessary to achieve the work described under each alternate.

E. PRODUCTS (Not Used)

PART 2 - EXECUTION

2.1 SCHEDULE OF ALTERNATES

A. Alternate 1: Helical Pile Static Load Testing

1. State the amount to be added/deducted from the Base Bid to eliminate load testing one (1) helical pile at each bridge abutment, total two (2) tests.
2. Base Bid includes all other work not identified as an Alternate, including load testing of one (1) helical pile at each abutment of the bridge, total two (2) tests.

END OF SECTION 012300

NOT FOR BID

NOT FOR BID

SECTION 012400 - PERMITS

PART 1 - GENERAL

1.1 RELATED DOCUMENTS

A. Drawings and general provisions of the Contract, including General and Supplementary Conditions and other Division 1 Specification Sections, apply to this Section.

1.2 SUMMARY

A. This Section includes permits that have been issued for this Project as well as permits-in-progress initiated by the Owner and those required Contractor application.

1.3 DEFINITIONS

A. Permits: A document issued by the Authorities having jurisdiction approving specific construction. Permits may approve the documents as submitted or contain caveats that are to be followed.
1. Preconstruction Permits: Permits issued prior to the bidding and award and which are required prior to proceeding to this stage.
2. Post Bid Permits: Permits required to by applied for by the successful contractor. These include demolition permits, building permits and sub-permits such as mechanical, electrical, fire suppression and plumbing.
3. Post Construction Permits: Permits issued by the authorities having jurisdiction stating that a structure or portion of the structure has been approved as complying with applicable laws, regulations and codes and may be occupied and put to its intended you.

1.4 RESPONSIBILITIES

A. The Contractor shall abide by the approved permits which are to include the notations provided by the entity/person approving the permit.

B. The Contractor is responsible for obtaining and paying for all construction permits unless stated otherwise in the construction documents.
1. The Contractor shall conform to all of the regulations and requirements, and shall be responsible for costs associated therewith, of all permits required of the Work.
2. The Contractor shall be responsible for scheduling all inspections as required by the permits.

PART 2 - PRODUCTS (Not Used)

PART 3 - EXECUTION

3.1 SCHEDULE OF ISSUED PERMITS

A. Delaware State Historic Preservation Office (SHPO).

B. United States Army Corps of Engineers (USACE).

C. New Castle County (Flood Plain).

D. Delaware Department of Transportation (DelDOT).

E. Department of Natural Resources and Environmental Control (DNREC).
1. Sediment and Stormwater Plan Approval.

F. State of Delaware Architectural Accessibility Board.

G. Delaware Division of Facilities Management (DFM)

3.2 SCHEDULE OF PENDING PERMITS.

A. None.

NOT FOR BID

END OF SECTION 012400

NOT FOR BID

SECTION 012500 - CONTRACT MODIFICATION PROCEDURES

PART 1 - GENERAL

1.1 RELATED DOCUMENTS

A. Drawings and general provisions of the Contract, including General and Supplementary Conditions and other Division 1 Specification Sections, apply to this Section.

1.2 SUMMARY

A. This Section specifies administrative and procedural requirements for handling and processing Contract modifications.

B. Related Sections include the following:

1. Division 1 Section "Submittal Procedures for" administrative procedures for handling requests for substitutions made after Contract award.

1.3 MINOR CHANGES IN THE WORK

A. Architect will issue supplemental instructions authorizing Minor Changes in the Work, not involving adjustment to the Contract Sum or the Contract Time, on AIA Document G710, "Architect's Supplemental Instructions.

1.4 PROPOSAL REQUESTS

A. Owner-Initiated Proposal Requests: Architect will issue a detailed description of proposed changes in the Work that may require adjustment to the Contract Sum or the Contract Time. If necessary, the description will include supplemental or revised Drawings and Specifications.

1. Proposal Requests issued by Architect are for information only. Do not consider them instructions either to stop work in progress or to execute the proposed change.
2. Within time specified in Proposal Request after receipt of Proposal Request, submit a quotation estimating cost adjustments to the Contract Sum and the Contract Time necessary to execute the change.

   a. Include a list of quantities of products required or eliminated and unit costs, with total amount of purchases and credits to be made. If requested, furnish survey data to substantiate quantities.
   b. Indicate applicable taxes, delivery charges, equipment rental, and amounts of trade discounts.
   c. Include an updated Contractor's Construction Schedule that indicates the effect of the change, including, but not limited to, changes in activity duration, start and finish times, and activity relationship. Use available total float before requesting an extension of the Contract Time.

B. Contractor-Initiated Proposals: If latent or unforeseen conditions require modifications to the Contract, Contractor may propose changes by submitting a request for a change.

1. Include a statement outlining reasons for the change and the effect of the change on the Work. Provide a complete description of the proposed change. Indicate the effect of the proposed change on the Contract Sum and the Contract Time.
2. Include a list of quantities of products required or eliminated and unit costs, with total amount of purchases and credits to be made. If requested, furnish survey data to substantiate quantities.
3. Indicate applicable taxes, delivery charges, equipment rental, and amounts of trade discounts.
4. Include an updated Contractor's Construction Schedule that indicates the effect of the change, including, but not limited to, changes in activity duration, start and finish times, and activity relationship. Use available total float before requesting an extension of the Contract Time.
5. Comply with requirements in Division 1 Section "Product Requirements" if the proposed change requires substitution of one product or system for product or system specified.

NOT FOR BID

1.5 CHANGE ORDER PROCEDURES

A. On Owner's approval of a Proposal Request, Architect will issue a Change Order for signatures of Owner and Contractor on AIA Document G701.

1.6 CONSTRUCTION CHANGE DIRECTIVE

A. Construction Change Directive: Architect may issue a Construction Change Directive on AIA Document G714. Construction Change Directive instructs Contractor to proceed with a change in the Work, for subsequent inclusion in a Change Order.

1. Construction Change Directive contains a complete description of change in the Work. It also designates method to be followed to determine change in the Contract Sum or the Contract Time.

B. Documentation: Maintain detailed records on a time and material basis of work required by the Construction Change Directive.

1. After completion of change, submit an itemized account and supporting data necessary to substantiate cost and time adjustments to the Contract.

PART 2 - PRODUCTS (Not Used)

PART 3 - EXECUTION (Not Used)

END OF SECTION 012500

NOT FOR BID

SECTION 012900 - PAYMENT PROCEDURES

PART 1 - GENERAL

1.1 RELATED DOCUMENTS

A. Drawings and general provisions of the Contract, including General and Supplementary Conditions and other Division 1 Specification Sections, apply to this Section.

1.2 SUMMARY

A. This Section specifies administrative and procedural requirements necessary to prepare and process Applications for Payment.

B. Related Sections include the following:

1. Division 1 Section "Contract Modification Procedures" for administrative procedures for handling changes to the Contract.
2. Division 1 Section "Construction Progress Documentation" for administrative requirements governing preparation and submittal of Contractor's Construction Schedule.

1.3 DEFINITIONS

A. Schedule of Values: A statement furnished by Contractor allocating portions of the Contract Sum to various portions of the Work and used as the basis for reviewing Contractor's Applications for Payment.

1.4 SCHEDULE OF VALUES

A. Coordination: Coordinate preparation of the Schedule of Values with preparation of Contractor's Construction Schedule.

1. Correlate line items in the Schedule of Values with other required administrative forms and schedules, including the following:

   a. Application for Payment forms with Continuation Sheets.

2. Submit the Schedule of Values to Architect at earliest possible date but no later than seven days before the date scheduled for submittal of initial Applications for Payment.

B. Format and Content: Use the Project Manual table of contents as a guide to establish line items for the Schedule of Values. Provide at least one line item for each Specification Section.

1. Identification: Include the following Project identification on the Schedule of Values:

   a. Project name and location.
   b. Name of Architect.

c. Architect's project number.
d. Contractor's name and address.
e. Date of submittal.

2. Arrange the Schedule of Values in tabular form with separate columns to indicate the following for each item listed:

   a. Related Specification Section or Division.
   b. Description of the Work.
   c. Change Orders (numbers) that affect value.
   d. Dollar value.

      1) Percentage of the Contract Sum to nearest one-hundredth percent, adjusted to total 100 percent.

3. Provide a breakdown of the Contract Sum in enough detail to facilitate continued evaluation of Applications for Payment and progress reports. Coordinate with the Project Manual table of contents. Provide several line items for principal subcontract amounts, where appropriate.
4. Round amounts to nearest whole dollar; total shall equal the Contract Sum.
5. Provide a separate line item in the Schedule of Values for each part of the Work where Applications for Payment may include materials or equipment purchased or fabricated and stored, but not yet installed.

   a. Differentiate between items stored on-site and items stored off-site. Include evidence of insurance or bonded warehousing if required.

6. Provide separate line items in the Schedule of Values for initial cost of materials, for each subsequent stage of completion, and for total installed value of that part of the Work.
7. Each item in the Schedule of Values and Applications for Payment shall be complete. Include total cost and proportionate share of general overhead and profit for each item.

   a. Temporary facilities and other major cost items that are not direct cost of actual work-in-place may be shown either as separate line items in the Schedule of Values or distributed as general overhead expense, at Contractor's option.

8. Schedule Updating: Update and resubmit the Schedule of Values before the next Applications for Payment when Change Orders or Construction Change Directives result in a change in the Contract Sum.

1.5 APPLICATIONS FOR PAYMENT

A. Each Application for Payment shall be consistent with previous applications and payments as certified by Architect and paid for by Owner.

   1. Initial Application for Payment, Application for Payment at time of Substantial Completion, and final Application for Payment involve additional requirements.

NOT FOR BID

B. Payment Application Times: The date for each progress payment is indicated in the Agreement between Owner and Contractor. The period of construction Work covered by each Application for Payment is the period indicated in the Agreement.

C. Payment Application Forms: Use AIA Document G702 and AIA Document G703 Continuation Sheets as form for Applications for Payment.

D. Application Preparation: Complete every entry on form. Notarize and execute by a person authorized to sign legal documents on behalf of Contractor. Architect will return incomplete applications without action.

1. Entries shall match data on the Schedule of Values and Contractor's Construction Schedule. Use updated schedules if revisions were made.
2. Include amounts of Change Orders and Construction Change Directives issued before last day of construction period covered by application.

E. Transmittal: Submit 3 signed and notarized original copies of each Application for Payment to Architect by a method ensuring receipt within 24 hours. One copy shall include waivers of lien and similar attachments if required.

1. Transmit each copy with a transmittal form listing attachments and recording appropriate information about application.

F. Initial Application for Payment: Administrative actions and submittals that must precede or coincide with submittal of first Application for Payment include the following:

1. List of subcontractors.
2. Schedule of Values.
3. Contractor's Construction Schedule (preliminary if not final).
4. List of Contractor's staff assignments (Project Superintendent specifically).
5. Copies of building permits.
6. Certificates of insurance and insurance policies.
7. Performance and payment bonds.

G. Application for Payment at Substantial Completion: After issuing the Certificate of Substantial Completion, submit an Application for Payment showing 100 percent completion for portion of the Work claimed as substantially complete.

1. Include documentation supporting claim that the Work is substantially complete and a statement showing an accounting of changes to the Contract Sum.

H. Final Payment Application: Submit final Application for Payment with releases and supporting documentation not previously submitted and accepted, including, but not limited, to the following:

1. Updated final statement, accounting for final changes to the Contract Sum.
2. AIA Document G706, "Contractor's Affidavit of Payment of Debts and Claims."
3. AIA Document G706A, "Contractor's Affidavit of Release of Liens."
4. AIA Document G707, "Consent of Surety to Final Payment."

PART 2 - PRODUCTS (Not Used)

NOT FOR BID

PART 3 - EXECUTION (Not Used)

END OF SECTION 012900

NOT FOR BID

NOT FOR BID

SECTION 013100 - PROJECT MANAGEMENT AND COORDINATION

PART 1 - GENERAL

1.1 RELATED DOCUMENTS

A. Drawings and general provisions of the Contract, including General and Supplementary Conditions and other Division 1 Specification Sections, apply to this Section.

1.2 SUMMARY

A. This Section includes administrative provisions for coordinating construction operations on Project including, but not limited to, the following:

1. General project coordination procedures.
2. Administrative and supervisory personnel.
3. Project meetings.

B. Related Sections: The following Sections contain requirements that relate to this Section:

1. Division 1 Section "Construction Progress Documentation" for preparing and submitting the Contractor's Construction Schedule.
2. Division 1 Section "Closeout Procedures" for coordinating Contract closeout.

1.3 COORDINATION

A. Coordination: Coordinate construction operations included in various Sections of the Specifications to ensure efficient and orderly installation of each part of the Work. Coordinate construction operations, included in different Sections that depend on each other for proper installation, connection, and operation.

1. Schedule construction operations in sequence required to obtain the best results where installation of one part of the Work depends on installation of other components, before or after its own installation.
2. Coordinate installation of different components with subcontractors to ensure maximum accessibility for required maintenance, service, and repair.
3. Make adequate provisions to accommodate items scheduled for later installation.

B. If necessary, prepare memoranda for distribution to each party involved, outlining special procedures required for coordination. Include such items as required notices, reports, and list of attendees at meetings.

1. Prepare similar memoranda for Owner if coordination of their Work is required.

C. Administrative Procedures: Coordinate scheduling and timing of required administrative procedures with other construction activities and activities of other contractors to avoid conflicts and to ensure orderly progress of the Work. Such administrative activities include, but are not limited to, the following:

1. Preparation of Contractor's Construction Schedule.
2. Preparation of the Schedule of Values.
3. Installation and removal of temporary facilities and controls.
4. Delivery and processing of submittals.
5. Progress meetings.
6. Preinstallation conferences.
7. Project closeout activities.

NOT FOR BID

1.4 SUBMITTALS

A. Staff Names: Within 15 days of notice to proceed, submit a list of principal staff assignments, including superintendent and other personnel in attendance at Project site. Identify individuals and their duties and responsibilities; list addresses and telephone numbers, including home and office telephone numbers. Provide names, addresses, and telephone numbers of individuals assigned as standbys in the absence of individuals assigned to Project.

1.5 PROJECT MEETINGS

A. General: The Architect will schedule and conduct meetings and conferences at Project site, unless otherwise indicated.

1. Attendees: Inform participants and others involved, and individuals whose presence is required, of date and time of each meeting.
2. Minutes: The Architect will record significant discussions and agreements achieved. The minutes will be distributed to everyone concerned, including Owner, within 7 days of the meeting.

B. Preconstruction Conference: A preconstruction conference will be scheduled before the start of construction, at a time convenient to the Owner and Contractor, but no later than 15 days after execution of the Agreement. The conference will be held at the Project. The meeting will be conducted to review responsibilities and personnel assignments.

1. Attendees: Authorized representatives of Owner, Architect, and their consultants; Contractor and its superintendent; major subcontractors; and other concerned parties shall attend the conference. All participants at the conference shall be familiar with Project and authorized to conclude matters relating to the Work.
2. Agenda: Items of significance that could affect progress will be discussed, including the following:

   a. Tentative construction schedule.
   b. Designation of responsible personnel.
   c. Procedures for processing field decisions and Change Orders.
   d. Procedures for processing Applications for Payment.
   e. Submittal procedures.
   f. Preparation of Record Documents.
   g. Use of the premises.
   h. Responsibility for temporary facilities and controls.
   i. Parking availability.
   j. Storage areas.

k. Equipment deliveries and priorities.
l. Progress cleaning.
m. Working hours.

C. Progress Meetings: Progress meetings will be conducted every two weeks. Coordinate dates of meetings with preparation of payment requests.

1. Attendees: In addition to representatives of Owner and Architect, each contractor, subcontractor, supplier, and other entity concerned with current progress or involved in planning, coordination, or performance of future activities shall be represented at these meetings. All participants at the conference shall be familiar with Project and authorized to conclude matters relating to the Work.
2. Agenda: Review and correct or approve minutes of previous progress meeting. Review other items of significance that could affect progress. Include topics for discussion as appropriate to status of Project.

   a. Contractor's Construction Schedule: Review progress since the last meeting. Determine whether each activity is on time, ahead of schedule, or behind schedule, in relation to Contractor's Construction Schedule. Determine how construction behind schedule will be expedited; secure commitments from parties involved to do so. Discuss whether schedule revisions are required to ensure that current and subsequent activities will be completed within the Contract Time.
   b. Review present and future needs of each entity present, including the following:

      1) Deliveries.
      2) Off-site fabrication.
      3) Access.
      4) Site utilization.
      5) Temporary facilities and controls.
      6) Work hours.
      7) Progress cleaning.
      8) Quality and work standards.

3. Reporting: The Architect will distribute minutes of the meeting to each party present and to parties who should have been present. A brief summary, in narrative form, of progress since the previous meeting and report will be included.

   a. Schedule Updating: Revise Contractor's Construction Schedule after each progress meeting where revisions to the schedule have been made or recognized. The revised schedule will be issued concurrently with the report of each meeting.

PART 2 - PRODUCTS (Not Used)

PART 3 - EXECUTION (Not Used)

END OF SECTION 01310

NOT FOR BID

(THIS PAGE INTENTIONALLY LEFT BLANK)

NOT FOR BID

NOT FOR BID

SECTION 013150 – FIELD ENGINEERING

PART 1 - GENERAL

1.1 RELATED DOCUMENTS

A. Drawings and general provisions of the Contract, including General and Supplementary Conditions and other Division 1 Specification Sections, apply to this Section.

1.2 SUMMARY

A. This Section includes administrative provisions and procedural requirements for Field Engineering services, including, but not necessarily limited to the following:

1. Land Survey Work.
2. Engineering services.

1.3 SUBMITTALS

A. Certificates: Submit a certificate signed by the Land Surveyor certifying that the location and elevation of improvements comply with the Contract Documents.

B. Project Record Documents: Submit a record of Work performed and record survey data as required under provisions of Sections "Submittals" and "Project Closeout".

1.4 QUALITY ASSURANCE

A. Surveyor: Engage a Professional Land Surveyor, licensed in the State of Delaware, to perform required surveying services to ensure that grades, lines, levels, and locations of the Work are in compliance with the Contract Documents.

B. Engineer: Engage a Professional Engineer of the discipline required, registered in the State of Delaware, to perform required engineering services.

1.5 EXAMINATION

A. The Owner will identify existing control points and property line corner stakes.

B. Verify layout information shown on the Drawings, in relation to the property survey and existing benchmarks before proceeding to layout the Work. Locate and protect existing benchmarks and control points. Preserve permanent reference points during construction.

1. Do not change or relocate benchmarks or control points without prior written approval. Promptly report lost or destroyed reference points, or requirements to relocate reference points because of necessary changes in grades or locations.
2. Promptly replace lost or destroyed Project control points. Base replacements on the original survey control points.

C. Establish and maintain a minimum of two permanent benchmarks on the site, referenced to data established by survey control points.

1. Record benchmark locations, with horizontal and vertical data, on Project Record Documents.

D. Existing utilities and equipment: The existence and location of underground and other utilities and construction indicated as existing are not guaranteed. Before beginning sitework, investigate and verify the existence and location of underground utilities and other construction.

1.6 PERFORMANCE

A. Working from lines and levels established by the property survey, establish benchmarks and markers to set lines and levels at each story of construction and elsewhere as needed to properly locate each element of the Project. Calculate and measure required dimensions within indicated or recognized tolerances. Do not scale Drawings to determine dimensions.

1. Advise entities engaged in construction activities, of marked lines and levels provided for their use.
2. As construction proceeds, check every major element for line, level and plumb.

B. Surveyor's Log: Maintain a surveyor's log of control and other survey Work. Make this log available for reference.

1. Record deviations from required lines and levels, and advise the Architect when deviations that exceed indicated or recognized tolerances are detected. On Project Record Drawings, record deviations that are accepted and not corrected.
2. On completion of foundation walls, major site improvements, and other Work requiring field engineering services, prepare a certified survey showing dimensions, locations, angles and elevations of construction and sitework.

C. Site Improvements: Locate and lay out site improvements, including pavements, stakes for grading, fill and topsoil placement, utility slopes and invert elevations by instrumentation and similar appropriate means.

D. Building Lines and Levels: Locate and lay out batter boards for structures, building foundations, column grids and locations, floor levels and control lines and levels required for mechanical and electrical work.

PART 2 - PRODUCTS (Not Used)

PART 3 - EXECUTION (Not Used)

END OF SECTION 013150

NOT FOR BID

NOT FOR BID

SECTION 013200 - CONSTRUCTION PROGRESS DOCUMENTATION

PART 1 - GENERAL

1.1 RELATED DOCUMENTS

A. Drawings and general provisions of the Contract, including General and Supplementary Conditions and other Division 1 Specification Sections, apply to this Section.

1.2 SUMMARY

A. This Section includes administrative and procedural requirements for documenting the progress of construction during performance of the Work, including the following:

1. Contractor's Construction Schedule.
2. Field condition reports.
3. Special reports.

B. Related Sections include the following:

1. Division 1 Section "Payment Procedures" for submitting the Schedule of Values.
2. Division 1 Section "Project Management and Coordination" for submitting and distributing meeting and conference minutes.

1.3 DEFINITIONS

A. Activity: A discrete part of a project that can be identified for planning, scheduling, monitoring, and controlling the construction project. Activities included in a construction schedule consume time and resources.

1. Critical activities are activities on the critical path. They must start and finish on the planned early start and finish times.

B. CPM: Critical path method, which is a method of planning and scheduling a construction project where activities are arranged based on activity relationships. Network calculations determine when activities can be performed and the critical path of Project.

C. Critical Path: The longest connected chain of interdependent activities through the network schedule that establishes the minimum overall Project duration and contains no float.

D. Event: The starting or ending point of an activity.

E. Major Area: A story of construction, a separate building, or a similar significant construction element.

F. Milestone: A key or critical point in time for reference or measurement.

1.4 SUBMITTALS

A. Preliminary Construction Schedule: Submit two opaque copies.

B. Contractor's Construction Schedule: Submit two opaque copies of initial schedule, large enough to show entire schedule for entire construction period.

C. Field Condition Reports: Submit two copies at time of discovery of differing conditions.

D. Special Reports: Submit two copies at time of unusual event.

1.5 COORDINATION

A. Coordinate preparation and processing of schedules and reports with performance of construction activities and with scheduling and reporting of separate contractors.

B. Coordinate Contractor's Construction Schedule with the Schedule of Values, list of subcontracts, Submittals Schedule, progress reports, payment requests, and other required schedules and reports.

1. Secure time commitments for performing critical elements of the Work from parties involved.
2. Coordinate each construction activity in the network with other activities and schedule them in proper sequence.

PART 2 - PRODUCTS

2.1 CONTRACTOR'S CONSTRUCTION SCHEDULE, GENERAL

A. Procedures: Comply with procedures contained in AGC's "Construction Planning & Scheduling."

B. Time Frame: Extend schedule from date established for commencement of the Work to date of Substantial Completion.

1. Contract completion date shall not be changed by submission of a schedule that shows an early completion date, unless specifically authorized by Change Order.

C. Activities: Treat each separate area as a separate numbered activity for each principal element of the Work. Comply with the following:

1. Activity Duration: Define activities so no activity is longer than 20 days, unless specifically allowed by Architect.

NOT FOR BID

2. Submittal Review Time: Include review and resubmittal times indicated in Division 1 Section "Submittal Procedures" in schedule. Coordinate submittal review times in Contractor's Construction Schedule with Submittals Schedule.
3. Substantial Completion: Indicate completion in advance of date established for Substantial Completion, and allow time for Architect's administrative procedures necessary for certification of Substantial Completion.

D. Constraints: Include constraints and work restrictions indicated in the Contract Documents and as follows in schedule, and show how the sequence of the Work is affected.

1. Work Restrictions: Show the effect of the following items on the schedule:

   a. Coordination with existing construction.
   b. Use of premises restrictions.
   c. Provisions for future construction.
   d. Seasonal variations.
   e. Environmental controls.

2. Work Stages: Indicate important stages of construction for each major portion of the Work, including, but not limited to, the following:

   a. Mockups.
   b. Fabrication.
   c. Deliveries.
   d. Installation.

E. Milestones: Include milestones indicated in the Contract Documents in schedule, including, but not limited to, the Notice to Proceed, Substantial Completion, and Final Completion.

F. Contract Modifications: For each proposed contract modification and concurrent with its submission, prepare a time-impact analysis using fragnets to demonstrate the effect of the proposed change on the overall project schedule.

2.2 CONSTRUCTION SCHEDULE

A. Bar-Chart Schedule: Submit horizontal bar-chart-type construction schedule within five days of date established for commencement of the Work.

B. Preparation: Indicate each significant construction activity separately. Identify first workday of each week with a continuous vertical line. Outline significant construction activities.

2.3 REPORTS

A. Daily Construction Reports: Prepare a daily construction report recording the following information concerning events at Project site:

NOT FOR BID

1. List of subcontractors at Project site.
2. List of separate contractors at Project site.
3. Approximate count of personnel at Project site.
4. Equipment at Project site.
5. Material deliveries.
6. High and low temperatures and general weather conditions.
7. Accidents.
8. Meetings and significant decisions.
9. Unusual events (refer to special reports).
10. Stoppages, delays, shortages, and losses.
11. Emergency procedures.
12. Orders and requests of authorities having jurisdiction.
13. Change Orders received and implemented.
14. Construction Change Directives received and implemented.
15. Substantial Completions authorized.

B. Field Condition Reports: Immediately on discovery of a difference between field conditions and the Contract Documents, prepare and submit a detailed report. Submit with a request for interpretation. Include a detailed description of the differing conditions, together with recommendations for changing the Contract Documents.

NOT FOR BID

2.4 SPECIAL REPORTS

A. General: Submit special reports directly to Owner within one day of an occurrence. Distribute copies of report to parties affected by the occurrence.

B. Reporting Unusual Events: When an event of an unusual and significant nature occurs at Project site, whether or not related directly to the Work, prepare and submit a special report. List chain of events, persons participating, response by Contractor's personnel, evaluation of results or effects, and similar pertinent information. Advise Owner in advance when these events are known or predictable.

PART 3 - EXECUTION

3.1 CONTRACTOR'S CONSTRUCTION SCHEDULE

A. Contractor's Construction Schedule Updating: At bi-weekly intervals, update schedule to reflect actual construction progress and activities. Issue schedule at each regularly scheduled progress meeting.

1. Revise schedule immediately after each meeting or other activity where revisions have been recognized or made. Issue updated schedule concurrently with the report of each such meeting.
2. As the Work progresses, indicate Actual Completion percentage for each activity.

B. Distribution: Distribute copies of approved schedule to Architect, Owner, separate contractors, and other parties identified by Contractor with a need-to-know schedule responsibility.

END OF SECTION 013200

NOT FOR BID

(THIS PAGE INTENTIONALLY LEFT BLANK)

NOT FOR BID

NOT FOR BID

SECTION 013300 - SUBMITTAL PROCEDURES

PART 1 - GENERAL

1.1 RELATED DOCUMENTS

A. Drawings and general provisions of the Contract, including General and Supplementary Conditions and other Division 1 Specification Sections, apply to this Section.

1.2 SUMMARY

A. This Section includes administrative and procedural requirements for submitting Shop Drawings, Product Data, Samples, and other submittals.

B. Related Sections include the following:

1. Division 1 Section "Payment Procedures" for submitting Applications for Payment and the Schedule of Values.
2. Division 1 Section "Project Management and Coordination" for submitting and distributing meeting and conference minutes and for submitting Coordination Drawings.
3. Division 1 Section "Construction Progress Documentation" for submitting schedules and reports, including Contractor's Construction Schedule and the Submittals Schedule.
4. Division 1 Section "Quality Requirements" for submitting test and inspection reports and for mockup requirements.
5. Division 1 Section "Closeout Procedures" for submitting warranties.
6. Division 1 Section "Project Record Documents" for submitting Record Drawings, Record Specifications, and Record Product Data.
7. Division 1 Section "Operation and Maintenance Data" for submitting operation and maintenance manuals.

1.3 DEFINITIONS

A. Action Submittals: Written and graphic information that requires Architect's responsive action.

B. Informational Submittals: Written information that does not require Architect's responsive action. Submittals may be rejected for not complying with requirements.

1.4 SUBMITTAL PROCEDURES

A. General: Electronic copies of CAD Drawings of the Contract Drawings will be provided by Architect for Contractor's use in preparing submittals. The Contractor will be responsible for field verifying existing conditions.

B. Coordination: Coordinate preparation and processing of submittals with performance of construction activities.

1. Coordinate each submittal with fabrication, purchasing, testing, delivery, other submittals, and related activities that require sequential activity.
2. Coordinate transmittal of different types of submittals for related parts of the Work so processing will not be delayed because of need to review submittals concurrently for coordination.

   a. Architect reserves the right to withhold action on a submittal requiring coordination with other submittals until related submittals are received.

C. Processing Time: Allow enough time for submittal review, including time for resubmittals, as follows. Time for review shall commence on Architect's receipt of submittal. No extension of the Contract Time will be authorized because of failure to transmit submittals enough in advance of the Work to permit processing, including resubmittals.

1. Initial Review: Allow 15 days for initial review of each submittal. Allow additional time if coordination with subsequent submittals is required. Architect will advise Contractor when a submittal being processed must be delayed for coordination.
2. Intermediate Review: If intermediate submittal is necessary, process it in same manner as initial submittal.
3. Resubmittal Review: Allow 15 days for review of each resubmittal.
4. Sequential Review: Where sequential review of submittals by Architect's consultants, Owner, or other parties is indicated, allow 21 days for initial review of each submittal.

D. Identification: Place a permanent label or title block on each submittal for identification.

1. Indicate name of firm or entity that prepared each submittal on label or title block.
2. Provide a space approximately 6 by 8 inches (150 by 200 mm) on label or beside title block to record Contractor's review and approval markings and action taken by Architect.
3. Include the following information on label for processing and recording action taken:

   a. Project name.
   b. Date.
   c. Name and address of Architect.
   d. Name and address of Contractor.
   e. Name and address of subcontractor.
   f. Name and address of supplier.
   g. Name of manufacturer.
   h. Submittal number or other unique identifier, including revision identifier.

      1) Submittal number shall use Specification Section number followed by a decimal point and then a sequential number (e.g., 06100.01). Resubmittals shall include an alphabetic suffix after another decimal point (e.g., 06100.01.A).

   i. Number and title of appropriate Specification Section.

NOT FOR BID

j. Drawing number and detail references, as appropriate.
k. Location(s) where product is to be installed, as appropriate.
l. Other necessary identification.

E. Deviations: Highlight or otherwise specifically identify deviations from the Contract Documents on submittals.

F. Additional Copies: Unless additional copies are required for final submittal, and unless Architect observes noncompliance with provisions in the Contract Documents, initial submittal may serve as final submittal.

1. Submit one copy of submittal to concurrent reviewer in addition to specified number of copies to Architect.
2. Additional copies submitted for maintenance manuals will be marked with action taken and will be returned.

G. Transmittal: Package each submittal individually and appropriately for transmittal and handling. Transmit each submittal using a transmittal form. Architect will return submittals, without review, received from sources other than Contractor.

1. Transmittal Form: Provide locations on form for the following information:

a. Project name.
b. Date.
c. Destination (To:).
d. Source (From:).
e. Names of subcontractor, manufacturer, and supplier.
f. Category and type of submittal.
g. Submittal purpose and description.
h. Specification Section number and title.
i. Drawing number and detail references, as appropriate.
j. Submittal and transmittal distribution record.
k. Remarks.
l. Signature of transmitter.

2. On an attached separate sheet, prepared on Contractor's letterhead, record relevant information, requests for data, revisions other than those requested by Architect on previous submittals, and deviations from requirements in the Contract Documents, including minor variations and limitations. Include same label information as related submittal.

H. Resubmittals: Make resubmittals in same form and number of copies as initial submittal.

1. Note date and content of previous submittal.
2. Note date and content of revision in label or title block and clearly indicate extent of revision.
3. Resubmit submittals until they are marked "Furnish as Submitted".

NOT FOR BID

I. Distribution: Furnish copies of final submittals to manufacturers, subcontractors, suppliers, fabricators, installers, authorities having jurisdiction, and others as necessary for performance of construction activities. Show distribution on transmittal forms.

J. Use for Construction: Use only final submittals with mark indicating "Furnish as Submitted" or "Revise as Noted & Furnish" taken by Architect.

NOT FOR BID

1.5 CONTRACTOR'S USE OF ARCHITECT'S CAD FILES

A. General: At Contractor's written request, copies of Architect's CAD files will be provided to Contractor for Contractor's use in connection with Project, subject to the following conditions:

1. CADD files are limited to those that have been generated for this Project.
2. CADD files for the floor plans and roof plans shall be provided. Files for details, etc. will not be provided.
3. Contractor will be asked to sign Architects waiver of release form before files will be delivered to the contractor.

PART 2 - PRODUCTS

2.1 ACTION SUBMITTALS

A. General: Prepare and submit Action Submittals required by individual Specification Sections.

B. Product Data: Collect information into a single submittal for each element of construction and type of product or equipment.

1. If information must be specially prepared for submittal because standard printed data are not suitable for use, submit as Shop Drawings, not as Product Data.
2. Mark each copy of each submittal to show which products and options are applicable.
3. Include the following information, as applicable:

a. Manufacturer's written recommendations.
b. Manufacturer's product specifications.
c. Manufacturer's installation instructions.
d. Standard color charts.
e. Manufacturer's catalog cuts.
f. Wiring diagrams showing factory-installed wiring.
g. Printed performance curves.
h. Operational range diagrams.
i. Mill reports.
j. Standard product operation and maintenance manuals.
k. Compliance with specified referenced standards.
l. Testing by recognized testing agency.

m. Application of testing agency labels and seals.
n. Notation of coordination requirements.

4. Submit Product Data before or concurrent with Samples.
5. Number of Copies: Submit six (6) copies of Product Data, unless otherwise indicated. Architect will return three copies. Mark up and retain one returned copy as a Project Record Document.

C. Shop Drawings: Prepare Project-specific information, drawn accurately to scale. Do not base Shop Drawings on reproductions of the Contract Documents or standard printed data.

1. Preparation: Fully illustrate requirements in the Contract Documents. Include the following information, as applicable:

a. Dimensions.
b. Identification of products.
c. Fabrication and installation drawings.
d. Roughing-in and setting diagrams.
e. Wiring diagrams showing field-installed wiring, including power, signal, and control wiring.
f. Shopwork manufacturing instructions.
g. Templates and patterns.
h. Schedules.
i. Design calculations.
j. Compliance with specified standards.
k. Notation of coordination requirements.
l. Notation of dimensions established by field measurement.
m. Relationship to adjoining construction clearly indicated.
n. Seal and signature of professional engineer if specified.
o. Wiring Diagrams: Differentiate between manufacturer-installed and field-installed wiring.

2. Sheet Size: Except for templates, patterns, and similar full-size drawings, submit Shop Drawings on sheets at least 8-1/2 by 11 inches (215 by 280 mm) but no larger than 30 by 40 inches (750 by 1000 mm).
3. Number of Copies: Submit six (6) opaque copies of each submittal, unless copies are required for operation and maintenance manuals. Submit five copies where copies are required for operation and maintenance manuals. Architect will retain three copies; remainder will be returned.

D. Samples: Submit Samples for review of kind, color, pattern, and texture for a check of these characteristics with other elements and for a comparison of these characteristics between submittal and actual component as delivered and installed.

1. Transmit Samples that contain multiple, related components such as accessories together in one submittal package.
2. Identification: Attach label on unexposed side of Samples that includes the following:

NOT FOR BID

a. Generic description of Sample.
b. Product name and name of manufacturer.
c. Sample source.
d. Number and title of appropriate Specification Section.

3. Disposition: Maintain sets of approved Samples at Project site, available for quality-control comparisons throughout the course of construction activity. Sample sets may be used to determine final acceptance of construction associated with each set.

   a. Samples that may be incorporated into the Work are indicated in individual Specification Sections. Such Samples must be in an undamaged condition at time of use.
   b. Samples not incorporated into the Work, or otherwise designated as Owner's property, are the property of Contractor.

4. Samples for Initial Selection: Submit manufacturer's color charts consisting of units or sections of units showing the full range of colors, textures, and patterns available.

   a. Number of Samples: Submit one full set(s) of available choices where color, pattern, texture or similar characteristics are required to be selected from manufacturer's product line. Architect will return submittal with options selected.

5. Samples for Verification: Submit full-size units or Samples of size indicated, prepared from same material to be used for the Work, cured and finished in manner specified, and physically identical with material or product proposed for use, and that show full range of color and texture variations expected. Samples include, but are not limited to, the following: partial sections of manufactured or fabricated components; small cuts or containers of materials; complete units of repetitively used materials; swatches showing color, texture, and pattern; color range sets; and components used for independent testing and inspection.

   a. Number of Samples: Submit four sets of Samples. Architect will retain three Sample sets; remainder will be returned.

      1) Submit a single Sample where assembly details, workmanship, fabrication techniques, connections, operation, and other similar characteristics are to be demonstrated.
      2) If variation in color, pattern, texture, or other characteristic is inherent in material or product represented by a Sample, submit at least four sets of paired units that show approximate limits of variations.

E. Product Schedule or List: As required in individual Specification Sections, prepare a written summary indicating types of products required for the Work and their intended location. Include the following information in tabular form:

1. Type of product. Include unique identifier for each product.
2. Number and name of room or space.
3. Location within room or space.

NOT FOR BID

4. Number of Copies: Submit three copies of product schedule or list, unless otherwise indicated. Architect will return two copies.

   a. Mark up and retain one returned copy as a Project Record Document.

F. Contractor's Construction Schedule: Comply with requirements specified in Division 1 Section "Construction Progress Documentation" for Construction Manager's action.

G. Submittals Schedule: Comply with requirements specified in Division 1 Section "Construction Progress Documentation."

H. Application for Payment: Comply with requirements specified in Division 1 Section "Payment Procedures."

I. Schedule of Values: Comply with requirements specified in Division 1 Section "Payment Procedures."

J. Subcontract List: Prepare a written summary identifying individuals or firms proposed for each portion of the Work, including those who are to furnish products or equipment fabricated to a special design. Include the following information in tabular form:

1. Name, address, and telephone number of entity performing subcontract or supplying products.
2. Number and title of related Specification Section(s) covered by subcontract.
3. Drawing number and detail references, as appropriate, covered by subcontract.
4. Number of Copies: Submit three copies of subcontractor list, unless otherwise indicated. Architect will return two copies.

   a. Mark up and retain one returned copy as a Project Record Document.

2.2 INFORMATIONAL SUBMITTALS

A. General: Prepare and submit Informational Submittals required by other Specification Sections.

1. Number of Copies: Submit three copies of each submittal, unless otherwise indicated. Architect will not return copies.
2. Certificates and Certifications: Provide a notarized statement that includes signature of entity responsible for preparing certification. Certificates and certifications shall be signed by an officer or other individual authorized to sign documents on behalf of that entity.
3. Test and Inspection Reports: Comply with requirements specified in Division 1 Section "Quality Requirements."

B. Coordination Drawings: Comply with requirements specified in Division 1 Section "Project Management and Coordination."

C. Contractor's Construction Schedule: Comply with requirements specified in Division 1 Section "Construction Progress Documentation."

NOT FOR BID

D. Qualification Data: Prepare written information that demonstrates capabilities and experience of firm or person. Include lists of completed projects with project names and addresses, names and addresses of architects and owners, and other information specified.

E. Welding Certificates: Prepare written certification that welding procedures and personnel comply with requirements in the Contract Documents. Submit record of Welding Procedure Specification (WPS) and Procedure Qualification Record (PQR) on AWS forms. Include names of firms and personnel certified.

F. Installer Certificates: Prepare written statements on manufacturer's letterhead certifying that Installer complies with requirements in the Contract Documents and, where required, is authorized by manufacturer for this specific Project.

G. Manufacturer Certificates: Prepare written statements on manufacturer's letterhead certifying that manufacturer complies with requirements in the Contract Documents. Include evidence of manufacturing experience where required.

H. Product Certificates: Prepare written statements on manufacturer's letterhead certifying that product complies with requirements in the Contract Documents.

I. Material Certificates: Prepare written statements on manufacturer's letterhead certifying that material complies with requirements in the Contract Documents.

J. Material Test Reports: Prepare reports written by a qualified testing agency, on testing agency's standard form, indicating and interpreting test results of material for compliance with requirements in the Contract Documents.

K. Product Test Reports: Prepare written reports indicating current product produced by manufacturer complies with requirements in the Contract Documents. Base reports on evaluation of tests performed by manufacturer and witnessed by a qualified testing agency, or on comprehensive tests performed by a qualified testing agency.

L. Research/Evaluation Reports: Prepare written evidence, from a model code organization acceptable to authorities having jurisdiction, that product complies with building code in effect for Project. Include the following information:

1. Name of evaluation organization.
2. Date of evaluation.
3. Time period when report is in effect.
4. Product and manufacturers' names.
5. Description of product.
6. Test procedures and results.
7. Limitations of use.

M. Schedule of Tests and Inspections: Comply with requirements specified in Division 1 Section "Quality Requirements."

NOT FOR BID

N. Preconstruction Test Reports: Prepare reports written by a qualified testing agency, on testing agency's standard form, indicating and interpreting results of tests performed before installation of product, for compliance with performance requirements in the Contract Documents.

O. Compatibility Test Reports: Prepare reports written by a qualified testing agency, on testing agency's standard form, indicating and interpreting results of compatibility tests performed before installation of product. Include written recommendations for primers and substrate preparation needed for adhesion.

P. Field Test Reports: Prepare reports written by a qualified testing agency, on testing agency's standard form, indicating and interpreting results of field tests performed either during installation of product or after product is installed in its final location, for compliance with requirements in the Contract Documents.

Q. Maintenance Data: Prepare written and graphic instructions and procedures for operation and normal maintenance of products and equipment. Comply with requirements specified in Division 1 Section "Operation and Maintenance Data."

R. Design Data: Prepare written and graphic information, including, but not limited to, performance and design criteria, list of applicable codes and regulations, and calculations. Include list of assumptions and other performance and design criteria and a summary of loads. Include load diagrams if applicable. Provide name and version of software, if any, used for calculations. Include page numbers.

S. Manufacturer's Instructions: Prepare written or published information that documents manufacturer's recommendations, guidelines, and procedures for installing or operating a product or equipment. Include name of product and name, address, and telephone number of manufacturer. Include the following, as applicable:

1. Preparation of substrates.
2. Required substrate tolerances.
3. Sequence of installation or erection.
4. Required installation tolerances.
5. Required adjustments.
6. Recommendations for cleaning and protection.

T. Manufacturer's Field Reports: Prepare written information documenting factory-authorized service representative's tests and inspections. Include the following, as applicable:

1. Name, address, and telephone number of factory-authorized service representative making report.
2. Statement on condition of substrates and their acceptability for installation of product.
3. Statement that products at Project site comply with requirements.
4. Summary of installation procedures being followed, whether they comply with requirements and, if not, what corrective action was taken.
5. Results of operational and other tests and a statement of whether observed performance complies with requirements.
6. Statement whether conditions, products, and installation will affect warranty.

NOT FOR BID

7. Other required items indicated in individual Specification Sections.

U. Insurance Certificates and Bonds: Prepare written information indicating current status of insurance or bonding coverage. Include name of entity covered by insurance or bond, limits of coverage, amounts of deductibles, if any, and term of the coverage.

V. Material Safety Data Sheets (MSDSs): Submit information directly to Owner; do not submit to Architect.

1. Architect will not review submittals that include MSDSs and will return the entire submittal for resubmittal.

NOT FOR BID

PART 3 - EXECUTION

3.1 CONTRACTOR'S REVIEW

A. Review each submittal and check for coordination with other Work of the Contract and for compliance with the Contract Documents. Note corrections and field dimensions. Mark with approval stamp before submitting to Architect.

B. Approval Stamp: Stamp each submittal with a uniform, approval stamp. Include Project name and location, submittal number, Specification Section title and number, name of reviewer, date of Contractor's approval, and statement certifying that submittal has been reviewed, checked, and approved for compliance with the Contract Documents.

3.2 ARCHITECT'S ACTION

A. General: Architect will not review submittals that do not bear Contractor's approval stamp and will return them without action.

B. Action Submittals: Architect will review each submittal, make marks to indicate corrections or modifications required, and return it. Architect will stamp each submittal with an action stamp and will mark stamp appropriately to indicate action taken, as follows:

1. Furnish as Submitted.
2. Revise as Noted & Furnish.
3. Revise as Noted & Furnish. Submit Revised Copy for Record.
4. Revise & Resubmit.

C. Informational Submittals: Architect will review each submittal and will not return it, or will return it if it does not comply with requirements. Architect will forward each submittal to appropriate party.

D. Partial submittals are not acceptable, will be considered nonresponsive, and will be returned without review.

E. Submittals not required by the Contract Documents may not be reviewed and may be discarded.

END OF SECTION 013300

NOT FOR BID

(THIS PAGE INTENTIONALLY LEFT BLANK)

NOT FOR BID

NOT FOR BID

SECTION 014000 - QUALITY REQUIREMENTS

PART 1 - GENERAL

1.1 RELATED DOCUMENTS

A. Drawings and general provisions of the Contract, including General and Supplementary Conditions and other Division 1 Specification Sections, apply to this Section.

1.2 SUMMARY

A. This Section includes administrative and procedural requirements for quality assurance and quality control.

B. Testing and inspecting services are required to verify compliance with requirements specified or indicated. These services do not relieve Contractor of responsibility for compliance with the Contract Document requirements.

1. Specific quality-assurance and -control requirements for individual construction activities are specified in the Sections that specify those activities. Requirements in those Sections may also cover production of standard products.
2. Specified tests, inspections, and related actions do not limit Contractor's other quality-assurance and -control procedures that facilitate compliance with the Contract Document requirements.
3. Requirements for Contractor to provide quality-assurance and -control services required by Architect, Owner or authorities having jurisdiction are not limited by provisions of this Section.

C. Related Sections include but are not limited to the following:

1. Division 1 Section "Construction Progress Documentation" for developing a schedule of required tests and inspections.
2. Division 1 Section "Cutting and Patching" for repair and restoration of construction disturbed by testing and inspecting activities.

1.3 DEFINITIONS

A. Quality-Assurance Services: Activities, actions, and procedures performed before and during execution of the Work to guard against defects and deficiencies and substantiate that proposed construction will comply with requirements.

B. Quality-Control Services: Tests, inspections, procedures, and related actions during and after execution of the Work to evaluate that actual products incorporated into the Work and completed

construction comply with requirements. Services do not include contract enforcement activities performed by Architect.

C. Mockups: Full-size, physical assemblies that are constructed on site. Mockups are used to verify selections made under sample submittals, to demonstrate aesthetic effects and, where indicated, qualities of materials and execution, and to review construction, coordination, testing, or operation; they are not Samples. Approved mockups establish the standard by which the Work will be judged.

D. Laboratory Mockups: Full-size, physical assemblies that are constructed at testing facility to verify performance characteristics.

E. Preconstruction Testing: Tests and inspections that are performed specifically for the Project before products and materials are incorporated into the Work to verify performance or compliance with specified criteria.

F. Product Testing: Tests and inspections that are performed by an NRTL, an NVLAP, or a testing agency qualified to conduct product testing and acceptable to authorities having jurisdiction, to establish product performance and compliance with industry standards.

G. Source Quality-Control Testing: Tests and inspections that are performed at the source, i.e., plant, mill, factory, or shop.

H. Field Quality-Control Testing: Tests and inspections that are performed on-site for installation of the Work and for completed Work.

I. Testing Agency: An entity engaged to perform specific tests, inspections, or both. Testing laboratory shall mean the same as testing agency.

J. Installer/Applicator/Erector: Contractor or another entity engaged by Contractor as an employee, Subcontractor, or Sub-subcontractor, to perform a particular construction operation, including installation, erection, application, and similar operations.

1. Using a term such as "carpentry" does not imply that certain construction activities must be performed by accredited or unionized individuals of a corresponding generic name, such as "carpenter." It also does not imply that requirements specified apply exclusively to trades people of the corresponding generic name.

K. Experienced: When used with an entity, "experienced" means having successfully completed a minimum of five previous projects similar in size and scope to this Project; being familiar with special requirements indicated; and having complied with requirements of authorities having jurisdiction.

1.4 CONFLICTING REQUIREMENTS

A. General: If compliance with two or more standards is specified and the standards establish different or conflicting requirements for minimum quantities or quality levels, comply with the

NOT FOR BID

most stringent requirement. Refer uncertainties and requirements that are different, but apparently equal, to Architect for a decision before proceeding.

B. Minimum Quantity or Quality Levels: The quantity or quality level shown or specified shall be the minimum provided or performed. The actual installation may comply exactly with the minimum quantity or quality specified, or it may exceed the minimum within reasonable limits. To comply with these requirements, indicated numerical values are minimum or maximum, as appropriate, for the context of requirements. Refer uncertainties to Architect for a decision before proceeding.

NOT FOR BID

1.5 SUBMITTALS

A. Qualification Data: For testing agency specified in "Quality Assurance" Article to demonstrate their capabilities and experience. Include proof of qualifications in the form of a recent report on the inspection of the testing agency by a recognized authority.

B. Schedule of Tests and Inspections: Prepare in tabular form and include the following:

1. Specification Section number and title.
2. Description of test and inspection.
3. Identification of applicable standards.
4. Identification of test and inspection methods.
5. Number of tests and inspections required.
6. Time schedule or time span for tests and inspections.
7. Entity responsible for performing tests and inspections.
8. Requirements for obtaining samples.
9. Unique characteristics of each quality-control service.

C. Reports: Prepare and submit certified written reports that include the following:

1. Date of issue.
2. Project title and number.
3. Name, address, and telephone number of testing agency.
4. Dates and locations of samples and tests or inspections.
5. Names of individuals making tests and inspections.
6. Description of the Work and test and inspection method.
7. Identification of product and Specification Section.
8. Complete test or inspection data.
9. Test and inspection results and an interpretation of test results.
10. Record of temperature and weather conditions at time of sample taking and testing and inspecting.
11. Comments or professional opinion on whether tested or inspected Work complies with the Contract Document requirements.
12. Name and signature of laboratory inspector.
13. Recommendations on retesting and reinspecting.

D. Permits, Licenses, and Certificates: For Owner's records, submit copies of permits, licenses, certifications, inspection reports, releases, jurisdictional settlements, notices, receipts for fee payments, judgments, correspondence, records, and similar documents, established for compliance with standards and regulations bearing on performance of the Work.

NOT FOR BID

1.6 QUALITY ASSURANCE

A. General: Qualifications paragraphs in this Article establish the minimum qualification levels required; individual Specification Sections specify additional requirements.

B. Installer Qualifications: A firm or individual experienced in installing, erecting, or assembling work similar in material, design, and extent to that indicated for this Project, whose work has resulted in construction with a record of successful in-service performance.

C. Manufacturer Qualifications: A firm experienced in manufacturing products or systems similar to those indicated for this Project and with a record of successful in-service performance, as well as sufficient production capacity to produce required units.

D. Fabricator Qualifications: A firm experienced in producing products similar to those indicated for this Project and with a record of successful in-service performance, as well as sufficient production capacity to produce required units.

E. Testing Agency Qualifications: An NRTL, an NVLAP, or an independent agency with the experience and capability to conduct testing and inspecting indicated, as documented according to ASTM E 548; and with additional qualifications specified in individual Sections; and where required by authorities having jurisdiction, that is acceptable to authorities.

1. NRTL: A nationally recognized testing laboratory according to 29 CFR 1910.7.
2. NVLAP: A testing agency accredited according to NIST's National Voluntary Laboratory Accreditation Program.

F. Factory-Authorized Service Representative Qualifications: An authorized representative of manufacturer who is trained and approved by manufacturer to inspect installation of manufacturer's products that are similar in material, design, and extent to those indicated for this Project.

1. Testing Agency Responsibilities: Submit a certified written report of each test, inspection, and similar quality-assurance service to Architect with copy to Contractor. Interpret tests and inspections and state in each report whether tested and inspected work complies with or deviates from the Contract Documents.

G. Mockups: Before installing portions of the Work requiring mockups, build mockups for each form of construction and finish required to comply with the following requirements, using materials indicated for the completed Work:

1. Build mockups in location and of size indicated or, if not indicated, as directed by Architect.

2. Notify Architect seven days in advance of dates and times when mockups will be constructed.
3. Demonstrate the proposed range of aesthetic effects and workmanship.
4. Obtain Architect's approval of mockups before starting work, fabrication, or construction.

    a. Allow seven days for initial review and each re-review of each mockup.

5. Maintain mockups during construction in an undisturbed condition as a standard for judging the completed Work.
6. Demolish and remove mockups when directed, unless otherwise indicated.

NOT FOR BID

1.7 QUALITY CONTROL

A. Owner Responsibilities: Where quality-control services are indicated as Owner's responsibility, Owner will engage a qualified testing agency to perform these services.

1. Owner will furnish Contractor with names, addresses, and telephone numbers of testing agencies engaged and a description of types of testing and inspecting they are engaged to perform.
2. Costs for retesting and reinspecting construction that replaces or is necessitated by work that failed to comply with the Contract Documents will be charged to Contractor and the Contract Sum will be adjusted by Change Order.

B. Tests and inspections not explicitly assigned to Owner are Contractor's responsibility. Unless otherwise indicated, provide quality-control services specified and those required by authorities having jurisdiction. Perform quality-control services required of Contractor by authorities having jurisdiction, whether specified or not.

1. Where services are indicated as Contractor's responsibility, engage a qualified testing agency to perform these quality-control services.

    a. Contractor shall not employ same entity engaged by Owner, unless agreed to in writing by Owner.

2. Notify testing agencies at least 24 hours in advance of time when Work that requires testing or inspecting will be performed.
3. Where quality-control services are indicated as Contractor's responsibility, submit a certified written report, in duplicate, of each quality-control service.
4. Testing and inspecting requested by Contractor and not required by the Contract Documents are Contractor's responsibility.
5. Submit additional copies of each written report directly to authorities having jurisdiction, when they so direct.

C. Manufacturer's Field Services: Where indicated, engage a factory-authorized service representative to inspect field-assembled components and equipment installation, including service connections. Report results in writing as specified in Division 1 Section "Submittal Procedures."

NOT FOR BID

D. Retesting/Reinspecting: Regardless of whether original tests or inspections were Contractor's responsibility, provide quality-control services, including retesting and reinspecting, for construction that replaced Work that failed to comply with the Contract Documents.

E. Testing Agency Responsibilities: Cooperate with Architect and Contractor in performance of duties. Provide qualified personnel to perform required tests and inspections.

1. Notify Architect and Contractor promptly of irregularities or deficiencies observed in the Work during performance of its services.
2. Determine the location from which test samples will be taken and in which in-situ tests are conducted.
3. Conduct and interpret tests and inspections and state in each report whether tested and inspected work complies with or deviates from requirements.
4. Submit a certified written report, in duplicate, of each test, inspection, and similar quality-control service through Contractor.
5. Do not release, revoke, alter, or increase the Contract Document requirements or approve or accept any portion of the Work.
6. Do not perform any duties of Contractor.

F. Associated Services: Cooperate with agencies performing required tests, inspections, and similar quality-control services, and provide reasonable auxiliary services as requested. Notify agency sufficiently in advance of operations to permit assignment of personnel. Provide the following:

1. Access to the Work.
2. Incidental labor and facilities necessary to facilitate tests and inspections.
3. Adequate quantities of representative samples of materials that require testing and inspecting. Assist agency in obtaining samples.
4. Facilities for storage and field curing of test samples.
5. Delivery of samples to testing agencies.
6. Preliminary design mix proposed for use for material mixes that require control by testing agency.
7. Security and protection for samples and for testing and inspecting equipment at Project site.

G. Coordination: Coordinate sequence of activities to accommodate required quality-assurance and -control services with a minimum of delay and to avoid necessity of removing and replacing construction to accommodate testing and inspecting.

1. Schedule times for tests, inspections, obtaining samples, and similar activities.

H. Schedule of Tests and Inspections: Prepare a schedule of tests, inspections, and similar quality-control services required by the Contract Documents. Submit schedule within 30 days of date established for commencement of the Work.

1. Distribution: Distribute schedule to Owner, Architect testing agencies, and each party involved in performance of portions of the Work where tests and inspections are required.

1.8 SPECIAL TESTS AND INSPECTIONS

A. Special Tests and Inspections: Owner will engage a qualified testing agency to conduct special tests and inspections required by authorities having jurisdiction as the responsibility of Owner, and as follows:

1. Verifying that manufacturer maintains detailed fabrication and quality-control procedures and reviewing the completeness and adequacy of those procedures to perform the Work.
2. Notifying Architect and Contractor promptly of irregularities and deficiencies observed in the Work during performance of its services.
3. Submitting a certified written report of each test, inspection, and similar quality-control service to Architect with copy to Contractor and to authorities having jurisdiction.
4. Submitting a final report of special tests and inspections at Substantial Completion, which includes a list of unresolved deficiencies.
5. Interpreting tests and inspections and stating in each report whether tested and inspected work complies with or deviates from the Contract Documents.
6. Retesting and reinspecting corrected work.

NOT FOR BID

PART 2 - PRODUCTS (Not Used)

PART 3 - EXECUTION

3.1 TEST AND INSPECTION LOG

A. Prepare a record of tests and inspections. Include the following:

1. Date test or inspection was conducted.
2. Description of the Work tested or inspected.
3. Date test or inspection results were transmitted to Architect.
4. Identification of testing agency or special inspector conducting test or inspection.

B. Maintain log at Project site. Post changes and modifications as they occur. Provide access to test and inspection log for Architect's reference during normal working hours.

3.2 REPAIR AND PROTECTION

A. General: On completion of testing, inspecting, sample taking, and similar services, repair damaged construction and restore substrates and finishes.

1. Provide materials and comply with installation requirements specified in other Specification Sections. Restore patched areas and extend restoration into adjoining areas with durable seams that are as invisible as possible.
2. Comply with the Contract Document requirements for Division 1 Section "Cutting and Patching."

B. Protect construction exposed by or for quality-control service activities.

C. Repair and protection are Contractor's responsibility, regardless of the assignment of responsibility for quality-control services.

END SECTION 014000

NOT FOR BID

NOT FOR BID

SECTION 014200 - REFERENCE STANDARDS AND DEFINITIONS

PART 1 - GENERAL

1.1 RELATED DOCUMENTS

A. Drawings and general provisions of the Contract, including General and Supplementary Conditions and other Division 1 Specification Sections, apply to this Section.

1.2 DEFINITIONS

A. General: Basic contract definitions are included in the Conditions of the Contract.

B. "Indicated": The term "indicated" refers to graphic representations, notes, or schedules on the Drawings; or to other paragraphs or schedules in the Specifications and similar requirements in the Contract Documents. Terms such as "shown," "noted," "scheduled," and "specified" are used to help the user locate the reference. Location is not limited.

C. "Directed": Terms such as "directed," "requested," "authorized," "selected," "approved," "required," and "permitted" mean directed by the Architect, requested by the Architect, and similar phrases.

D. "Approved": The term "approved," when used in conjunction with the Architect's action on the Contractor's submittals, applications, and requests, is limited to the Architect's duties and responsibilities as stated in the Conditions of the Contract.

E. "Regulations": The term "regulations" includes laws, ordinances, statutes, and lawful orders issued by authorities having jurisdiction, as well as rules, conventions, and agreements within the construction industry that control performance of the Work.

F. "Furnish": The term "furnish" means to supply and deliver to the Project site, ready for unloading, unpacking, assembly, installation, and similar operations.

G. "Install": The term "install" describes operations at the Project site including the actual unloading, temporary storage, unpacking, assembling, erecting, placing, anchoring, applying, working to dimension, finishing, curing, protecting, cleaning, and similar operations.

H. "Provide": The term "provide" means to furnish and install, complete and ready for the intended use.

I. "Installer": An installer is the Contractor or another entity engaged by the Contractor, either as an employee, subcontractor, or contractor of lower tier, to perform a particular construction activity, including installation, erection, application, or similar operations. Installers are required to be experienced in the operations they are engaged to perform.

1. The term "experienced," when used with the term "installer," means having successfully completed a minimum of five previous projects similar in size and scope to this Project; being familiar with the special requirements indicated; and having complied with requirements of authorities having jurisdiction.
2. Trades: Using a term such as "carpentry" does not imply that certain construction activities must be performed by accredited or unionized individuals of a corresponding generic name, such as "carpenter." It also does not imply that requirements specified apply exclusively to tradespersons of the corresponding generic name.
3. Assigning Specialists: Certain Sections of the Specifications require that specific construction activities shall be performed by specialists who are recognized experts in those operations. The specialists must be engaged for those activities, and their assignments are requirements over which the Contractor has no option. However, the ultimate responsibility for fulfilling contract requirements remains with the Contractor.

    a. This requirement shall not be interpreted to conflict with enforcing building codes and similar regulations governing the Work. It is also not intended to interfere with local trade-union jurisdictional settlements and similar conventions.

J. "Project site" is the space available to the Contractor for performing construction activities, either exclusively or in conjunction with others performing other work as part of the Project. The extent of the Project site is shown on the Drawings and may or may not be identical with the description of the land on which the Project is to be built.

K. "Testing Agencies": A testing agency is an independent entity engaged to perform specific inspections or tests, either at the Project site or elsewhere, and to report on and, if required, to interpret results of those inspections or tests.

1.3 SPECIFICATION FORMAT AND CONTENT EXPLANATION

A. Specification Format: These Specifications are organized into Divisions and Sections based on the CSI/CSC's "MasterFormat" numbering system.

B. Specification Content: These Specifications use certain conventions for the style of language and the intended meaning of certain terms, words, and phrases when used in particular situations. These conventions are as follows:

1. Abbreviated Language: Language used in the Specifications and other Contract Documents is abbreviated. Words and meanings shall be interpreted as appropriate. Words implied, but not stated, shall be interpolated as the sense requires. Singular words shall be interpreted as plural and plural words interpreted as singular where applicable as the context of the Contract Documents indicates.
2. Imperative mood and streamlined language are generally used in the Specifications. Requirements expressed in the imperative mood are to be performed by the Contractor. At certain locations in the Section Text, subjective language is used for clarity to describe responsibilities that must be fulfilled indirectly by the Contractor or by others when so noted.

NOT FOR BID

a. The words "shall," "shall be," or "shall comply with," depending on the context, are implied where a colon (:) is used within a sentence or phrase.

NOT FOR BID

1.4 INDUSTRY STANDARDS

A. Applicability of Standards: Unless the Contract Documents include more stringent requirements, applicable construction industry standards have the same force and effect as if bound or copied directly into the Contract Documents to the extent referenced. Such standards are made a part of the Contract Documents by reference.

B. Publication Dates: Comply with standards in effect as of the date of the Contract Documents.

C. Conflicting Requirements: Where compliance with two or more standards is specified and the standards establish different or conflicting requirements for minimum quantities or quality levels, comply with the most stringent requirement. Refer uncertainties and requirements that are different, but apparently equal to the Architect for a decision before proceeding.

1. Minimum Quantity or Quality Levels: The quantity or quality level shown or specified shall be the minimum provided or performed. The actual installation may comply exactly with the minimum quantity or quality specified, or it may exceed the minimum within reasonable limits. To comply with these requirements, indicated numeric values are minimum or maximum, as appropriate, for the context of the requirements. Refer uncertainties to the Architect for a decision before proceeding.

D. Copies of Standards: Each entity engaged in construction on the Project must be familiar with industry standards applicable to its construction activity. Copies of applicable standards are not bound with the Contract Documents.

1. Where copies of standards are needed to perform a required construction activity, the Contractor shall obtain copies directly from the publication source and make them available on request.

E. Abbreviations and Names: Trade association names and titles of general standards are frequently abbreviated. Where abbreviations and acronyms are used in the Specifications or other Contract Documents, they mean the recognized name of the trade association, standards-producing organization, authorities having jurisdiction, or other entity applicable to the context of the text provision. Refer to Gale Research's "Encyclopedia of Associations" or Columbia Books' "National Trade & Professional Associations of the U.S.," which are available in most libraries.

1.5 SUBMITTALS

A. Permits, Licenses, and Certificates: For the Owner's records, submit copies of permits, licenses, certifications, inspection reports, releases, jurisdictional settlements, notices, receipts for fee payments, judgments, correspondence, records, and similar documents, established for compliance with standards and regulations bearing on performance of the Work.

PRODUCTS (Not Applicable)

PART 2 - EXECUTION (Not Applicable)

END OF SECTION 014200

NOT FOR BID

White Clay Creek State Park Construction Documents
TRI-VALLEY TRAIL, PHASE II June 2018
Project Manual Project No. WCCS-07A

NOT FOR BID

SECTION 015000 - TEMPORARY FACILITIES AND CONTROLS

PART 1 - GENERAL

1.1 RELATED DOCUMENTS

A. Drawings and general provisions of the Contract, including General and Supplementary Conditions and other Division 1 Specification Sections, apply to this Section.

1.2 SUMMARY

A. This Section includes requirements for temporary utilities, support facilities, and security and protection facilities.

1.3 USE CHARGES

A. General: Cost or use charges for temporary facilities shall be included in the Contract Sum. Allow other entities to use temporary services and facilities without cost, including, but not limited to testing agencies and authorities having jurisdiction.

B. Sewer Service: Provide temporary restroom facilities for workers.

Water Service: Water is not available at the site. Provide water as required for construction.

Electric Power Service: Pay electric-power-service use charges for electricity used by all entities for construction operations.

C. Telephone Service: Provide temporary phone service to the site as required to contact Contractor site representatives.

1.4 INFORMATIONAL SUBMITTALS

A. Site Plan: Show temporary facilities, utility hookups, staging areas, and parking areas for construction personnel.

B. Erosion- and Sedimentation-Control Plan: Show compliance with requirements of EPA Construction General Permit or authorities having jurisdiction, whichever is more stringent.

C. Fire-Safety Program: Show compliance with requirements of NFPA 241 and authorities having jurisdiction. Indicate Contractor personnel responsible for management of fire-prevention program.

D. Moisture-Protection Plan: Describe procedures and controls for protecting materials and construction from water absorption and damage.

1. Describe delivery, handling, and storage provisions for materials subject to water absorption or water damage.
2. Indicate procedures for discarding water-damaged materials, protocols for mitigating water intrusion into completed Work, and replacing water-damaged Work.
3. Indicate sequencing of work that requires water, such as sprayed fire-resistive materials, plastering, and terrazzo grinding, and describe plans for dealing with water from these operations. Show procedures for verifying that wet construction has dried sufficiently to permit installation of finish materials.

E. Dust- and HVAC-Control Plan: Submit coordination drawing and narrative that indicates the dust- and HVAC-control measures proposed for use, proposed locations, and proposed time frame for their operation. Identify further options if proposed measures are later determined to be inadequate. Include the following:

1. Locations of dust-control partitions at each phase of work.
2. HVAC system isolation schematic drawing.
3. Location of proposed air-filtration system discharge.
4. Waste handling procedures.
5. Other dust-control measures.

NOT FOR BID

1.5 QUALITY ASSURANCE

A. Electric Service: Comply with NECA, NEMA, and UL standards and regulations for temporary electric service. Install service to comply with NFPA 70.

B. Comply with Federal, State and local codes and regulations as well as utility company requirements.

C. Coordinate work with Owner's requirements.

D. Materials: Materials must be new and adequate in capacity for the required usage. Materials must not create unsafe conditions nor violate requirements of applicable codes and standards.

E. Tests and Inspections: Arrange for authorities having jurisdiction to test and inspect each temporary utility before use. Obtain required certifications and permits.

1.6 PROJECT CONDITIONS

A. Temporary Use of Permanent Facilities: Installer of each permanent service shall assume responsibility for operation, maintenance, and protection of each permanent service during its use

as a construction facility before Owner's acceptance, regardless of previously assigned responsibilities.

B. Maintain excavations free of water. Provide and operate pumping equipment. Grade site to drain water away from buildings and excavations.

C. Provide temporary protection for installed products. Control traffic in immediate area to minimize damage.

D. Prohibit traffic and storage on waterproofed and roofed surfaces, on lawns and landscaped areas.

NOT FOR BID

PART 2 - PRODUCTS

2.1 MATERIALS

A. Chain-Link Fencing: Minimum 2-inch (50-mm), 0.148-inch- (3.8-mm-) thick, galvanized-steel, chain-link fabric fencing; minimum 6 feet (1.8 m) high with galvanized-steel pipe posts; minimum 2-3/8-inch- (60-mm-) OD line posts and 2-7/8-inch- (73-mm-) OD corner and pull posts, with 1-5/8-inch- (42-mm-) OD top rails.

B. Portable Chain-Link Fencing: Minimum 2-inch (50-mm), 0.148-inch- (3.8-mm-) thick, galvanized-steel, chain-link fabric fencing; minimum 6 feet (1.8 m) high with galvanized-steel pipe posts; minimum 2-3/8-inch- (60-mm-) OD line posts and 2-7/8-inch- (73-mm-) OD corner and pull posts, with 1-5/8-inch- (42-mm-) OD top and bottom rails. Provide concrete bases for supporting posts.

C. Polyethylene Sheet: Reinforced, fire-resistive sheet, 10-mil (0.25-mm) minimum thickness, with flame-spread rating of 15 or less per ASTM E 84 and passing NFPA 701 Test Method 2.

D. Dust-Control Adhesive-Surface Walk-off Mats: Provide mats minimum 36 by 60 inches (914 by 1624 mm).

E. Insulation: Unfaced mineral-fiber blanket, manufactured from glass, slag wool, or rock wool; with maximum flame-spread and smoke-developed indexes of 25 and 50, respectively.

F. Lumber and Plywood: Pressure-treated dimension lumber and plywood suitable for exterior exposure.

G. Paint: Exterior latex primer and matching topcoat.

2.2 TEMPORARY FACILITIES

A. Field Offices, General: Prefabricated or mobile units with serviceable finishes, temperature controls, and foundations adequate for normal loading.

B. Common-Use Field Office: Of sufficient size to accommodate needs of Owner, Architect/Engineer and construction personnel office activities and to accommodate Project

meetings specified in other Division 01 Sections. Keep office clean and orderly. Furnish and equip offices as follows:

1. Furniture required for Project-site documents including file cabinets, plan tables, plan racks, and bookcases.
2. Conference room of sufficient size to accommodate meetings of 10 individuals. Provide electrical power service and 120-V ac duplex receptacles, with no fewer than one receptacle on each wall. Furnish room with conference table, chairs, and 4-foot- (1.2-m-) square tack and marker boards.
3. Drinking water and private toilet.
4. Heating and cooling equipment necessary to maintain a uniform indoor temperature of 68 to 72 deg F (20 to 22 deg C).
5. Lighting fixtures capable of maintaining average illumination of 20 fc (215 lx) at desk height.

C. Storage and Fabrication Sheds: Provide sheds sized, furnished, and equipped to accommodate materials and equipment for construction operations.

1. Store combustible materials apart from building.

NOT FOR BID

2.3 EQUIPMENT

A. Fire Extinguishers: Portable, UL rated; with class and extinguishing agent as required by locations and classes of fire exposures.

B. Heating Equipment: Use of gasoline-burning space heaters, open-flame heaters, or salamander-type heating units is prohibited.

PART 3 - EXECUTION

3.1 INSTALLATION, GENERAL

A. Locate facilities where they will serve Project adequately and result in minimum interference with performance of the Work. Relocate and modify facilities as required by progress of the Work.

B. Provide each facility ready for use when needed to avoid delay. Do not remove until facilities are no longer needed or are replaced by authorized use of completed permanent facilities.

3.2 TEMPORARY UTILITY INSTALLATION

A. General: Install temporary service or connect to existing service.

1. Arrange with utility company, Owner, and existing users for time when service can be interrupted, if necessary, to make connections for temporary services.

B. Sewers and Drainage: Provide temporary utilities to remove effluent lawfully.

1. Connect temporary sewers to municipal system as directed by authorities having jurisdiction.

C. Water Service: Provide potable water for drinking and construction purposes.

1. The Contractor shall make all necessary arrangements for temporary water service for construction purposes, and furnish at his own expense all piping and accessories required.
2. Take positive measures to preclude cross-connections and backflow.
3. The Contractor will assume the cost of water consumed if responsible care and restraint are not exercised by the Contractor in its use.

D. Sanitary Facilities: Provide temporary toilets, wash facilities, and drinking water for use of construction personnel. Comply with requirements of authorities having jurisdiction for type, number, location, operation, and maintenance of fixtures and facilities.

E. Construction Aids: The General Contractor and each Subcontractor shall provide construction aids and equipment required by their personnel and to facilitate execution of their Work. Examples are scaffolds, staging, ladders, stairs, ramps, runways, platforms, railings, hoists, cranes, chutes and other such facilities and equipment. Mutual use may be arranged by the Contractor where applicable.

F. Heating and Cooling: Provide temporary heating and cooling required by construction activities for curing or drying of completed installations or for protecting installed construction from adverse effects of low temperatures or high humidity. Select equipment that will not have a harmful effect on completed installations or elements being installed.

G. Isolation of Work Areas in Occupied Facilities: Prevent dust, fumes, and odors from entering occupied areas.

H. Ventilation and Humidity Control: Provide temporary ventilation required by construction activities for curing or drying of completed installations or for protecting installed construction from adverse effects of high humidity. Select equipment that will not have a harmful effect on completed installations or elements being installed. Coordinate ventilation requirements to produce ambient condition required and minimize energy consumption.

1. Provide dehumidification systems when required to reduce substrate moisture levels to level required to allow installation or application of finishes.

I. Electric Power Service: Provide electric power service and distribution system of sufficient size, capacity, and power characteristics required for construction operations.

J. Telephone Service: Provide superintendent with cellular telephone or portable two-way radio for use when away from field office.

3.3 SUPPORT FACILITIES INSTALLATION

A. General: Comply with the following:

NOT FOR BID

1. Provide construction for temporary offices, shops, and sheds located within construction area or within 30 feet (9 m) of building lines that is noncombustible according to ASTM E 136. Comply with NFPA 241.
2. Maintain support facilities until Architect/Engineer schedules Substantial Completion inspection. Remove before Substantial Completion. Personnel remaining after Substantial Completion will be permitted to use permanent facilities, under conditions acceptable to Owner.

B. Security: Security of persons and property in the areas under control of the Contractor shall be the Contractor's exclusive responsibility.

1. The Contractor, at his own expense, shall initiate whatever programs that are necessary to execute his responsibility.
2. Control of access to the area under the Contractor's control shall be maintained. Visitors shall be required to report immediately to the Contractor's Superintendent and to produce full identification which will be recorded in the Contractor's Daily Log along with the purpose of the visit.

C. Traffic Controls: Comply with requirements of authorities having jurisdiction.

1. Protect existing site improvements to remain including curbs, pavement, and utilities.
2. Maintain access for fire-fighting equipment and access to fire hydrants and control valves.
3. Provide and maintain uninterrupted vehicular access to site and within to temporary construction facilities and work areas for persons and equipment involved in the construction of Project.
4. Maintain traffic areas free of excavated materials, construction equipment, products, snow, ice and debris.

D. Traffic Regulation: Obtain all necessary permits for access to and use of public roads and streets for construction and hauling purposes. Comply with traffic control regulations applying to permit issuance.

1. Provide markers, signs, lights and barriers on and near the site to safely control construction traffic and public access.

E. Parking: Use designated areas of Owner's existing parking areas for construction personnel's private vehicles and of Contractor's light-weight vehicles.

F. Project Signs: Provide Project signs as indicated. Unauthorized signs are not permitted.

1. Identification Signs: Provide Project identification signs as indicated on Drawings.
2. Temporary Signs: Provide other signs as indicated and as required to inform public and individuals seeking entrance to Project.

   a. Provide temporary, directional signs for construction personnel and visitors.

3. Maintain and touchup signs so they are legible at all times.

NOT FOR BID

G. Waste Disposal Facilities: Comply with requirements specified in Section 017419 "Construction Waste Management and Disposal."

H. Cleaning During Construction: Control accumulation of waste materials and rubbish. Periodically dispose of legally off site.

1. Clean interior areas prior to the start of finish work. Maintain areas free of dust and other contaminants during finishing operations.

I. Lifts and Hoists: Provide facilities necessary for hoisting materials and personnel.

1. Truck cranes and similar devices used for hoisting materials are considered "tools and equipment" and not temporary facilities.

J. Protection of Existing Facilities: Protect existing vegetation, equipment, structures, utilities, and other improvements at Project site and on adjacent properties, except those indicated to be removed or altered. Repair damage to existing facilities.

K. Environmental Protection: Provide protection, operate temporary facilities, and conduct construction as required to comply with environmental regulations and that minimize possible air, waterway, and subsoil contamination or pollution or other undesirable effects.

L. Temporary Erosion and Sedimentation Control: Provide measures to prevent soil erosion and discharge of soil-bearing water runoff and airborne dust to undisturbed areas and to adjacent properties and walkways, according to erosion- and sedimentation-control Drawings.

1. Verify that flows of water redirected from construction areas or generated by construction activity do not enter or cross tree- or plant- protection zones.
2. Inspect, repair, and maintain erosion- and sedimentation-control measures during construction until permanent vegetation has been established.
3. Clean, repair, and restore adjoining properties and roads affected by erosion and sedimentation from Project site during the course of Project.
4. Remove erosion and sedimentation controls and restore and stabilize areas disturbed during removal.

M. Stormwater Control: Comply with requirements of authorities having jurisdiction. Provide barriers in and around excavations and subgrade construction to prevent flooding by runoff of stormwater from heavy rains.

N. Tree and Plant Protection: Install temporary fencing located as indicated or outside the drip line of trees to protect vegetation from damage from construction operations. Protect tree root systems from damage, flooding, and erosion.

O. Site Enclosure Fence: Before construction operations begin, furnish and install site enclosure fence in a manner that will prevent people and animals from easily entering site except by entrance gates.

1. Extent of Fence: As required to enclose portion of site determined sufficient to accommodate construction operations and maintain security.

NOT FOR BID

2. Maintain security by limiting number of keys and restricting distribution to authorized personnel. Furnish 10 sets of keys to Owner.

P. Security Enclosure and Lockup: Install temporary enclosure around partially completed areas of construction. Provide lockable entrances to prevent unauthorized entrance, vandalism, theft, and similar violations of security. Lock entrances at end of each work day.

Q. Barricades, Warning Signs, and Lights: Comply with requirements of authorities having jurisdiction for erecting structurally adequate barricades, including warning signs and lighting.

R. Temporary Egress: Maintain temporary egress from existing occupied facilities as indicated and as required by authorities having jurisdiction.

NOT FOR BID

3.4 OPERATION, TERMINATION, AND REMOVAL

A. Supervision: Enforce strict discipline in use of temporary facilities. To minimize waste and abuse, limit availability of temporary facilities to essential and intended uses.

B. Maintenance: Maintain facilities in good operating condition until removal.

1. Maintain operation of temporary enclosures, heating, cooling, humidity control, ventilation, and similar facilities on a 24-hour basis where required to achieve indicated results and to avoid possibility of damage.

C. Temporary Facility Changeover: Do not change over from using temporary security and protection facilities to permanent facilities until Substantial Completion.

D. Termination and Removal: Remove each temporary facility when need for its service has ended, when it has been replaced by authorized use of a permanent facility, or no later than Substantial Completion. Complete or, if necessary, restore permanent construction that may have been delayed because of interference with temporary facility. Repair damaged Work, clean exposed surfaces, and replace construction that cannot be satisfactorily repaired.

1. Materials and facilities that constitute temporary facilities are property of Contractor. Owner reserves right to take possession of Project identification signs.
2. Remove temporary roads and paved areas not intended for or acceptable for integration into permanent construction. Where area is intended for landscape development, remove soil and aggregate fill that do not comply with requirements for fill or subsoil. Remove materials contaminated with road oil, asphalt and other petrochemical compounds, and other substances that might impair growth of plant materials or lawns. Repair or replace street paving, curbs, and sidewalks at temporary entrances, as required by authorities having jurisdiction.
3. At Substantial Completion, repair, renovate, and clean permanent facilities used during construction period. Comply with final cleaning requirements specified in Section 017700 "Closeout Procedures."

END OF SECTION 015000

NOT FOR BID

NOT FOR BID

SECTION 015600 - ENVIRONMENTAL PROTECTION

PART 1 - GENERAL

1.1 ENVIRONMENTAL PROTECTION

A. Environmental protection considerations consist of, but are not limited to, the following factors:

1. Natural resources including air, water, and land.
2. Solid waste disposal.
3. Noise.
4. Control of toxic substances and hazardous materials.
5. The presence of chemical, physical, and biological elements and agents that adversely affect and alter ecological balances.

1.2 GENERAL REQUIREMENTS

A. Provide and maintain environmental protection defined herein, other Sections and as indicated in the Drawings.

B. Comply with all Federal, State, and local laws, ordinances and regulations pertaining to environmental protection.

C. Compliance by subcontractors with the provisions of this and various other sections of these specifications is the responsibility of the Contractor.

D. Use of equipment from which factory-installed, anti-pollution and noise control devices are removed or rendered ineffective, either intentionally or through lack of proper maintenance is prohibited.

E. Furnish a certificate that all materials and operating equipment installed as a part of this project, the installation thereof and all equipment used in the construction, are in compliance with all applicable local laws, ordinances, regulations and permits concerning environmental pollution control and abatement.

1.3 PROTECTION OF NATURAL RESOURCES

A. General: It is intended that the natural resources within the project boundaries and outside the limits of permanent work performed be preserved in their existing condition, be restored to an equivalent of the existing condition or improved as indicated, as approved by the Architect/Engineer, upon completion of the work. Confine on-site construction activities to areas defined by the drawings and specifications.

1.4 TOXIC SUBSTANCES

B. Asbestos and Hazardous Materials Procedure: In the event the Contractor, during the course of the work on the project, encounters the presence of asbestos or any materials containing asbestos, or polychlorinated biphenyl (PCB's) or any other hazardous materials as recognized by local Authorities having jurisdiction, promptly notify the Owner through the Architect/Engineer. Do not perform any work pertinent to the asbestos or hazardous material prior to receipt of special instructions from the Owner through the Architect/Engineer. Any delay in the progress of the work as a result of encountering either asbestos or hazardous materials on the project will be mitigated by the Architect/Engineer. Within 24 hours of this notification to the Owner through the Architect/Engineer of the encountering of the presence of asbestos or hazardous materials, the Contractor will meet with the Architect/Engineer to replan and work around the affected area. The Architect/Engineer will provide the special instructions without delay and upon confirmation by the local Authorities of the actions taken and authorize work to progress.

C. Comply with all applicable provisions of the National Emission Standards for Asbestos (40 CFR 61 Subpart B).

D. Comply with the local regulations of polychlorinated biphenyl (PCB). Since these chemicals are used in some existing insulation, existing fixed and vehicular transformers, assure proper marking, handling, and disposal of any PCB's in accordance with the regulations of 40 CFR 761.

1. Do not use PCB chemical substance, mixture, equipment, container, sealant, coating, or dust-control agent except in accordance with regulations of 40 CFR 761.
2. Immediately report any PCB chemical substance, mixture, equipment, container, sealant, coating or dust control agent found stored within the project area to the Architect in writing and stop work in the area.

E. Lead paint is not known to be present.

1.5 Asbestos. Is not known to be present.

1.6 CONTROL AND DISPOSAL OF EXCESS MATERIAL, TRASH AND DEBRIS

A. Dispose of excess excavated material that is approved by the Architect/Engineer as clean fill onsite if an onsite soil disposal area is approved by the Architect/Engineer. If no such site is approved, dispose of the material in accordance with the provision of paragraph 1.5 (C).

B. Pick-up trash and place in containers. Empty containers on a regular schedule. Conduct handling and disposal to prevent contamination of the site and other areas. Do not dispose of in areas of natural vegetation. On completion, leave the area clean and natural looking.

C. Dispose of rubbish and debris as follows:

1. Transport all waste off the site and dispose of it in a manner that complies with State, and local requirements. Secure a permit or license prior to transporting any material off the site. Do not burn or bury waste materials on the site.

NOT FOR BID

1.7 CONTROL AND DISPOSAL OF CHEMICAL AND SANITARY WASTES

A. Store chemical waste in corrosion-resistant containers, remove from the project site, and dispose of as necessary, but not less frequently than monthly. Provide for disposal of chemical waste in accordance with standard established practices as approved by the Architect. Dispose of lubricants to be discarded in accordance with approved procedures meeting state, and local regulations.

1.8 DUST CONTROL

A. Keep dust down at all times including non working hours, weekends, and holidays.

B. Secure and cover transport equipment and loose materials in transit to ensure that materials do not become airborne during transit.

PART 2 - PRODUCTS (Not Used)

PART 3 - EXECUTION (Not Used)

END OF SECTION 01560

NOT FOR BID

(THIS PAGE INTENTIONALLY LEFT BLANK)

NOT FOR BID

NOT FOR BID

SECTION 015639 - TEMPORARY TREE AND PLANT PROTECTION

PART 1 - GENERAL

1.1 RELATED DOCUMENTS

A. Drawings and general provisions of the Contract, including General and Supplementary Conditions and other Division 01 Specification Sections, apply to this Section.

1.2 SUMMARY

A. Section includes general protection and pruning of existing trees and plants that are affected by execution of the Work, whether temporary or permanent construction.

B. Related Sections:

1. Section 015000 "Temporary Facilities and Controls" for temporary site fencing.
2. Section 311000 "Site Clearing" for removing existing trees and shrubs.

1.3 DEFINITIONS

A. Caliper: Diameter of a trunk measured by a diameter tape at 6 inches (150 mm) above the ground for trees up to, and including, 4-inch (100-mm) size; and 12 inches (300 mm) above the ground for trees larger than 4-inch (100-mm) size.

B. Plant-Protection Zone: Area surrounding individual trees, groups of trees, shrubs, or other vegetation to be protected during construction, and indicated on Drawings.

C. Tree-Protection Zone: Area surrounding individual trees or groups of trees to be protected during construction, and defined by a circle concentric with each tree with a radius 1.5 times the diameter of the drip line unless otherwise indicated.

D. Vegetation: Trees, shrubs, groundcovers, grass, and other plants.

1.4 ACTION SUBMITTALS

A. Product Data: For each type of product indicated.

B. Samples for Verification: For each type of the following:

1. Organic Mulch: 1-pint (0.5-L) volume of organic mulch; in sealed plastic bags labeled with composition of materials by percentage of weight and source of mulch.

2. Protection-Zone Fencing: Assembled Samples of manufacturer's standard size made from full-size components.
3. Protection-Zone Signage: Full-size Samples of each size and text, ready for installation.

C. Tree Pruning Schedule: Written schedule detailing scope and extent of pruning of trees to remain that interfere with or are affected by construction.

1. Species and size of tree.
2. Location on site plan. Include unique identifier for each.
3. Reason for pruning.
4. Description of pruning to be performed.
5. Description of maintenance following pruning.

NOT FOR BID

1.5 INFORMATIONAL SUBMITTALS

A. Qualification Data: For qualified arborist and tree service firm.

B. Certification: From arborist, certifying that trees indicated to remain have been protected during construction according to recognized standards and that trees were promptly and properly treated and repaired when damaged.

C. Maintenance Recommendations: From arborist, for care and protection of trees affected by construction during and after completing the Work.

D. Existing Conditions: Documentation of existing trees and plantings indicated to remain, which establishes preconstruction conditions that might be misconstrued as damage caused by construction activities.

1. Use sufficiently detailed photographs or videotape.
2. Include plans and notations to indicate specific wounds and damage conditions of each tree or other plants designated to remain.

1.6 QUALITY ASSURANCE

A. Arborist Qualifications: Certified Arborist as certified by ISA.

B. Tree Service Firm Qualifications: An experienced tree service firm that has successfully completed temporary tree and plant protection work similar to that required for this Project and that will assign an experienced, qualified arborist to Project site during execution of the Work.

C. Preinstallation Conference: Conduct conference at Project site.

1. Review methods and procedures related to temporary tree and plant protection including, but not limited to, the following:

a. Construction schedule. Verify availability of materials, personnel, and equipment needed to make progress and avoid delays.
b. Enforcing requirements for protection zones.
c. Arborist's responsibilities.
d. Field quality control.

NOT FOR BID

1.7 PROJECT CONDITIONS

A. The following practices are prohibited within protection zones:

1. Storage of construction materials, debris, or excavated material.
2. Parking vehicles or equipment.
3. Foot traffic.
4. Erection of sheds or structures.
5. Impoundment of water.
6. Excavation or other digging unless otherwise indicated.
7. Attachment of signs to or wrapping materials around trees or plants unless otherwise indicated.

B. Do not direct vehicle or equipment exhaust toward protection zones.

C. Prohibit heat sources, flames, ignition sources, and smoking within or near protection zones and organic mulch.

PART 2 - PRODUCTS

2.1 MATERIALS

A. Topsoil: Natural or cultivated top layer of the soil profile or manufactured topsoil; containing organic matter and sand, silt, and clay particles; friable, pervious, and black or a darker shade of brown, gray, or red than underlying subsoil; reasonably free of subsoil, clay lumps, gravel, and other objects more than 1 inch (25 mm) in diameter; and free of weeds, roots, and toxic and other nonsoil materials.

1. Obtain topsoil only from well-drained sites where topsoil is 4 inches (100 mm) deep or more; do not obtain from bogs or marshes.

B. Organic Mulch: Free from deleterious materials and suitable as a top dressing for trees and shrubs, consisting of one of the following:

1. Type: Shredded hardwood.
2. Size Range: 3 inches (76 mm) maximum, 1/2 inch (13 mm) minimum.
3. Color: Natural.

C. Protection-Zone Fencing: Fencing fixed in position and meeting one of the following requirements.

1. Chain-Link Protection-Zone Fencing: Galvanized-steel fencing fabricated from minimum 2-inch (50-mm) opening, 0.148-inch- (3.76-mm-) diameter wire chain-link fabric; with pipe posts, minimum 2-3/8-inch- (60-mm-) OD line posts and 2-7/8-inch- (73-mm-) OD corner and pull posts; with 1-5/8-inch- (42-mm-) OD top rails; with 0.177-inch- (4.5-mm-) diameter top tension wire and 0.177-inch- (4.5-mm-) diameter bottom tension wire; with tie wires, hog ring ties, and other accessories for a complete fence system.

   a. Height: 4 feet (1.2 m).

2. Plastic Protection-Zone Fencing: Plastic construction fencing constructed of high-density extruded and stretched polyethylene fabric with 2-inch (50-mm) maximum opening in pattern and weighing a minimum of 0.4 lb/ft. (0.6 kg/m); remaining flexible from minus 60 to plus 200 deg F (minus 16 to plus 93 deg C); inert to most chemicals and acids; minimum tensile yield strength of 2000 psi (13.8 MPa) and ultimate tensile strength of 2680 psi (18.5 MPa); secured with plastic bands or galvanized-steel or stainless-steel wire ties; and supported by tubular or T-shape galvanized-steel posts spaced not more than 8 feet (2.4 m) apart.

   a. Height: 4 feet (1.2 m).
   b. Color: High-visibility orange, nonfading.

D. Protection-Zone Signage: Shop-fabricated, rigid plastic or metal sheet with attachment holes prepunched and reinforced; legibly printed with nonfading lettering and as follows:

1. Size and Text: DO NOT ENTER. TREE PROTECTION ZONE.
2. Lettering: 3-inch- (75-mm-) high minimum, white characters on red background.

NOT FOR BID

PART 3 - EXECUTION

3.1 EXAMINATION

A. Erosion and Sedimentation Control: Examine the site to verify that temporary erosion- and sedimentation-control measures are in place. Verify that flows of water redirected from construction areas or generated by construction activity do not enter or cross protection zones.

B. For the record, prepare written report, endorsed by arborist, listing conditions detrimental to tree and plant protection.

3.2 PREPARATION

A. Locate and clearly identify trees, shrubs, and other vegetation to remain. Flag each tree trunk at 54 inches (1372 mm) above the ground.

B. Protect tree root systems from damage caused by runoff or spillage of noxious materials while mixing, placing, or storing construction materials. Protect root systems from ponding, eroding, or excessive wetting caused by dewatering operations.

C. Tree-Protection Zones: Mulch areas inside tree-protection zones and other areas indicated.

1. Apply 4-inch (100-mm) average thickness of organic mulch. Do not place mulch within 6 inches (150 mm) of tree trunks.

3.3 TREE- AND PLANT-PROTECTION ZONES

A. Protection-Zone Fencing: Install protection-zone fencing along edges of protection zones before materials or equipment are brought on the site and construction operations begin in a manner that will prevent people from easily entering protected area except by entrance gates. Construct fencing so as not to obstruct safe passage or visibility at vehicle intersections where fencing is located adjacent to pedestrian walkways or in close proximity to street intersections, drives, or other vehicular circulation.

1. Chain-Link Fencing: Install to comply with ASTM F 567 and with manufacturer's written instructions.
2. Posts: Set or drive posts into ground one-third the total height of the fence without concrete footings. Where a post is located on existing paving or concrete to remain, provide appropriate means of post support acceptable to Architect.

B. Protection-Zone Signage: Install protection-zone signage in visibly prominent locations in a manner approved by Architect. Install one sign spaced approximately every 20 feet (6 m) on protection-zone fencing, but no fewer than one sign with each facing a different direction.

C. Maintain protection zones free of weeds and trash.

D. Repair or replace trees, shrubs, and other vegetation indicated to remain or be relocated that are damaged by construction operations, in a manner approved by Architect.

E. Maintain protection-zone fencing and signage in good condition as acceptable to Architect and remove when construction operations are complete and equipment has been removed from the site.

1. Do not remove protection-zone fencing, even temporarily, to allow deliveries or equipment access through the protection zone.
2. Temporary access is permitted subject to preapproval in writing by arborist if a root buffer effective against soil compaction is constructed as directed by arborist. Maintain root buffer so long as access is permitted.

NOT FOR BID

3.4 EXCAVATION

A. General: Excavate at edge of protection zones and for trenches indicated within protection zones according to requirements in Section 312000 "Earth Moving."

B. Trenching near Trees: Where utility trenches are required within protection zones, hand excavate under or around tree roots or tunnel under the roots by tunneling, auger boring, or pipe jacking. Do not cut main lateral tree roots or taproots; cut only smaller roots that interfere with installation of utilities. Cut roots as required for root pruning.

C. Redirect roots in backfill areas where possible. If encountering large, main lateral roots, expose roots beyond excavation limits as required to bend and redirect them without breaking. If encountered immediately adjacent to location of new construction and redirection is not practical, cut roots approximately 3 inches (75 mm) back from new construction and as required for root pruning.

D. Do not allow exposed roots to dry out before placing permanent backfill. Provide temporary earth cover or pack with peat moss and wrap with burlap. Water and maintain in a moist condition. Temporarily support and protect roots from damage until they are permanently relocated and covered with soil.

NOT FOR BID

3.5 ROOT PRUNING

A. Prune roots that are affected by temporary and permanent construction. Prune as follows:

1. Cut roots manually by digging a trench and cutting exposed roots with sharp pruning instruments; do not break, tear, chop, or slant the cuts. Do not use a backhoe or other equipment that rips, tears, or pulls roots.
2. Cut Ends: Coat cut ends of roots more than 1-1/2 inches (38 mm) in diameter with an emulsified asphalt or other coating formulated for use on damaged plant tissues and that is acceptable to arborist.
3. Temporarily support and protect roots from damage until they are permanently redirected and covered with soil.
4. Cover exposed roots with burlap and water regularly.
5. Backfill as soon as possible according to requirements in Section 312000 "Earth Moving."

B. Root Pruning at Edge of Protection Zone: Prune roots 6 inches (150 mm) inside of the protection zone, by cleanly cutting all roots to the depth of the required excavation.

C. Root Pruning within Protection Zone: Clear and excavate by hand to the depth of the required excavation to minimize damage to root systems. Use narrow-tine spading forks, comb soil to expose roots, and cleanly cut roots as close to excavation as possible.

NOT FOR BID

3.6 CROWN PRUNING

A. Prune branches that are affected by temporary and permanent construction. Prune branches as follows:

1. Prune trees to remain to compensate for root loss caused by damaging or cutting root system. Provide subsequent maintenance during contract period as recommended by arborist.
2. Pruning Standards: Prune trees according to ANSI A300 (Part 1) and the following:

   a. Type of Pruning: Cleaning.

3. Cut branches with sharp pruning instruments; do not break or chop.
4. Do not apply pruning paint to wounds.

B. Chip removed branches and spread over areas identified by Architect.

3.7 REGRADING

A. Lowering Grade: Where new finish grade is indicated below existing grade around trees, slope grade beyond the protection zone. Maintain existing grades within the protection zone.

B. Lowering Grade within Protection Zone: Where new finish grade is indicated below existing grade around trees, slope grade away from trees as recommended by arborist unless otherwise indicated.

1. Root Pruning: Prune tree roots exposed by lowering the grade. Do not cut main lateral roots or taproots; cut only smaller roots. Cut roots as required for root pruning.

C. Raising Grade: Where new finish grade is indicated above existing grade around trees, slope grade beyond the protection zone. Maintain existing grades within the protection zone.

D. Minor Fill within Protection Zone: Where existing grade is 2 inches (50 mm) or less below elevation of finish grade, fill with topsoil. Place topsoil in a single uncompacted layer and hand grade to required finish elevations.

3.8 FIELD QUALITY CONTROL

A. Inspections: Engage a qualified arborist to direct plant-protection measures in the vicinity of trees, shrubs, and other vegetation indicated to remain and to prepare inspection reports.

3.9 REPAIR AND REPLACEMENT

A. General: Repair or replace trees, shrubs, and other vegetation indicated to remain or be relocated that are damaged by construction operations, in a manner approved by Architect.

1. Submit details of proposed root cutting and tree and shrub repairs.
2. Have arborist perform the root cutting, branch pruning, and damage repair of trees and shrubs.
3. Treat damaged trunks, limbs, and roots according to arborist's written instructions.
4. Perform repairs within 24 hours.
5. Replace vegetation that cannot be repaired and restored to full-growth status, as determined by Architect.

B. Trees: Remove and replace trees indicated to remain that are more than 25 percent dead or in an unhealthy condition before the end of the correction period or are damaged during construction operations that Architect determines are incapable of restoring to normal growth pattern.

1. Provide new trees of same size and species as those being replaced for each tree that measures 6 inches (150 mm) or smaller in caliper size.

a. Species: Match existing tree to be replaced.

C. Soil Aeration: Where directed by Architect, aerate surface soil compacted during construction. Aerate 10 feet (3 m) beyond drip line and no closer than 36 inches (900 mm) to tree trunk. Drill 2-inch- (50-mm-) diameter holes a minimum of 12 inches (300 mm) deep at 24 inches (600 mm) o.c. Backfill holes with an equal mix of augered soil and sand.

NOT FOR BID

3.10 DISPOSAL OF SURPLUS AND WASTE MATERIALS

A. Disposal: Remove excess excavated material, displaced trees, trash and debris, and legally dispose of them off Owner's property.

END OF SECTION 015639

NOT FOR BID

SECTION 016000 - PRODUCT REQUIREMENTS

PART 1 - GENERAL

1.1 RELATED DOCUMENTS

A. Drawings and general provisions of the Contract, including General and Supplementary Conditions and other Division 1 Specification Sections, apply to this Section.

1.2 SUMMARY

A. This Section includes administrative and procedural requirements for selection of products for use in Project; product delivery, storage, and handling; manufacturers' standard warranties on products; special warranties; product substitutions; and comparable products.

B. Related Sections include but are not limited to the following:

1. Division 1 Section "References" for applicable industry standards for products specified.
2. Division 1 Section "Closeout Procedures" for submitting warranties for Contract closeout.
3. Other included Sections for specific requirements for warranties on products and installations specified to be warranted.

1.3 DEFINITIONS

A. Products: Items purchased for incorporating into the Work, whether purchased for Project or taken from previously purchased stock. The term "product" includes the terms "material," "equipment," "system," and terms of similar intent.

1. Named Products: Items identified by manufacturer's product name, including make or model number or other designation shown or listed in manufacturer's published product literature that is current as of date of the Contract Documents.
2. New Products: Items that have not previously been incorporated into another project or facility, except that products consisting of recycled-content materials are allowed, unless explicitly stated otherwise. Products salvaged or recycled from other projects are not considered new products.
3. Comparable Product: Product that is demonstrated and approved through submittal process, or where indicated as a product substitution, to have the indicated qualities related to type, function, dimension, in-service performance, physical properties, appearance, and other characteristics that equal or exceed those of specified product.

B. Substitutions: Changes in products, materials, equipment, and methods of construction from those required by the Contract Documents and proposed by Contractor.

Basis-of-Design Product Specification: Where a specific manufacturer's product is named and accompanied by the words "basis of design," including make or model number or other designation, to establish the significant qualities related to type, function, dimension, in-service performance, physical properties, appearance, and other characteristics for purposes of evaluating comparable products of other named manufacturers.

NOT FOR BID

1.4 SUBMITTALS

A. Product List: Submit a list, in tabular from, showing specified products. Include generic names of products required. Include manufacturer's name and proprietary product names for each product.

1. Coordinate product list with Contractor's Construction Schedule and the Submittals Schedule.
2. Form: Tabulate information for each product under the following column headings:

a. Specification Section number and title.
b. Generic name used in the Contract Documents.
c. Proprietary name, model number, and similar designations.
d. Manufacturer's name and address.
e. Supplier's name and address.
f. Installer's name and address.
g. Projected delivery date or time span of delivery period.
h. Identification of items that require early submittal approval for scheduled delivery date.

3. Initial Submittal: Within 30 days after date of commencement of the Work, submit 3 copies of initial product list. Include a written explanation for omissions of data and for variations from Contract requirements.

a. At Contractor's option, initial submittal may be limited to product selections and designations that must be established early in Contract period.

4. Completed List: Within 60 days after date of commencement of the Work, submit 3 copies of completed product list. Include a written explanation for omissions of data and for variations from Contract requirements.
5. Architect's Action: Architect will respond in writing to Contractor within 15 days of receipt of completed product list. Architect's response will include a list of unacceptable product selections and a brief explanation of reasons for this action. Architect's response, or lack of response, does not constitute a waiver of requirement to comply with the Contract Documents.

B. Substitution Requests: Submit three copies of each request for consideration. Identify product or fabrication or installation method to be replaced. Include Specification Section number and title and Drawing numbers and titles.

1. Substitution Request Form: Use CSI Form 13.1A at the end of this section.

2. Documentation: Show compliance with requirements for substitutions and the following, as applicable:

   a. Statement indicating why specified material or product cannot be provided.
   b. Coordination information, including a list of changes or modifications needed to other parts of the Work and to construction performed by Owner and separate contractors that will be necessary to accommodate proposed substitution.
   c. Detailed comparison of significant qualities of proposed substitution with those of the Work specified. Significant qualities may include attributes such as performance, weight, size, durability, visual effect, and specific features and requirements indicated.
   d. Product Data, including drawings and descriptions of products and fabrication and installation procedures.
   e. Samples, where applicable or requested.
   f. List of similar installations for completed projects with project names and addresses and names and addresses of architects and owners.
   g. Material test reports from a qualified testing agency indicating and interpreting test results for compliance with requirements indicated.
   h. Research evaluation reports evidencing compliance with building code in effect for Project, from a model code organization acceptable to authorities having jurisdiction.
   i. Detailed comparison of Contractor's Construction Schedule using proposed substitution with products specified for the Work, including effect on the overall Contract Time. If specified product or method of construction cannot be provided within the Contract Time, include letter from manufacturer, on manufacturer's letterhead, stating lack of availability or delays in delivery.
   j. Cost information, including a proposal of change, if any, in the Contract Sum.
   k. Contractor's certification that proposed substitution complies with requirements in the Contract Documents and is appropriate for applications indicated.
   l. Contractor's waiver of rights to additional payment or time that may subsequently become necessary because of failure of proposed substitution to produce indicated results.

3. Architect's/Engineer's Action: If necessary, Architect/Engineer will request additional information or documentation for evaluation within 7 days of receipt of a request for substitution. Architect/Engineer will notify Contractor of acceptance or rejection of proposed substitution within 15 days of receipt of request, or 7 days of receipt of additional information or documentation, whichever is later.

   a. Form of Acceptance: Change Order.
   b. Use product specified if Architect/Engineer cannot make a decision on use of a proposed substitution within time allocated.

C. Comparable Product Requests: Submit three copies of each request for consideration. Identify product or fabrication or installation method to be replaced. Include Specification Section number and title and Drawing numbers and titles.

NOT FOR BID

1. Architect's Action: If necessary, Architect/Engineer will request additional information or documentation for evaluation within one week of receipt of a comparable product request. Architect/Engineer will notify Contractor of approval or rejection of proposed comparable product request within 15 days of receipt of request, or 7 days of receipt of additional information or documentation, whichever is later.

    a. Form of Approval: As specified in Division 1 Section "Submittal Procedures."
    b. Use product specified if Architect cannot make a decision on use of a comparable product request within time allocated.

D. Basis-of-Design Product Specification Submittal: Comply with requirements in Division 1 Section "Submittal Procedures." Show compliance with requirements.

NOT FOR BID

1.5 QUALITY ASSURANCE

A. Compatibility of Options: If Contractor is given option of selecting between two or more products for use on Project, product selected shall be compatible with products previously selected, even if previously selected products were also options.

1. Each contractor is responsible for providing products and construction methods compatible with products and construction methods of other contractors.
2. If a dispute arises between contractors over concurrently selectable but incompatible products, Architect/Engineer will determine which products shall be used.

1.6 PRODUCT DELIVERY, STORAGE, AND HANDLING

A. Deliver, store, and handle products using means and methods that will prevent damage, deterioration, and loss, including theft. Comply with manufacturer's written instructions.

B. Delivery and Handling:

1. Schedule delivery to minimize long-term storage at Project site and to prevent overcrowding of construction spaces.
2. Coordinate delivery with installation time to ensure minimum holding time for items that are flammable, hazardous, easily damaged, or sensitive to deterioration, theft, and other losses.
3. Deliver products to Project site in an undamaged condition in manufacturer's original sealed container or other packaging system, complete with labels and instructions for handling, storing, unpacking, protecting, and installing.
4. Inspect products on delivery to ensure compliance with the Contract Documents and to ensure that products are undamaged and properly protected.

C. Storage:

1. Store products to allow for inspection and measurement of quantity or counting of units.
2. Store materials in a manner that will not endanger Project structure.

3. Store products that are subject to damage by the elements, under cover in a weathertight enclosure above ground, with ventilation adequate to prevent condensation.
4. Store cementitious products and materials on elevated platforms.
5. Store foam plastic from exposure to sunlight, except to extent necessary for period of installation and concealment.
6. Comply with product manufacturer's written instructions for temperature, humidity, ventilation, and weather-protection requirements for storage.
7. Protect stored products from damage and liquids from freezing.
8. Provide a secure location and enclosure at Project site for storage of materials and equipment by Owner's construction forces. Coordinate location with Owner.

NOT FOR BID

1.7 PRODUCT WARRANTIES

A. Warranties specified in other Sections shall be in addition to, and run concurrent with, other warranties required by the Contract Documents. Manufacturer's disclaimers and limitations on product warranties do not relieve Contractor of obligations under requirements of the Contract Documents.

1. Manufacturer's Warranty: Preprinted written warranty published by individual manufacturer for a particular product and specifically endorsed by manufacturer to Owner.
2. Special Warranty: Written warranty required by or incorporated into the Contract Documents, either to extend time limit provided by manufacturer's warranty or to provide more rights for Owner.

B. Special Warranties: Prepare a written document that contains appropriate terms and identification, ready for execution. Submit a draft for approval before final execution.

1. Manufacturer's Standard Form: Modified to include Project-specific information and properly executed.
2. Specified Form: When specified forms are included with the Specifications, prepare a written document using appropriate form properly executed.
3. Refer to Divisions 2 through 33 Sections for specific content requirements and particular requirements for submitting special warranties.

C. Submittal Time: Comply with requirements in Division 1 Section "Closeout Procedures."

PART 2 - PRODUCTS

2.1 PRODUCT SELECTION PROCEDURES

A. General Product Requirements: Provide products that comply with the Contract Documents, that are undamaged and, unless otherwise indicated, that are new at time of installation.

1. Provide products complete with accessories, trim, finish, fasteners, and other items needed for a complete installation and indicated use and effect.

2. Standard Products: If available, and unless custom products or nonstandard options are specified, provide standard products of types that have been produced and used successfully in similar situations on other projects.
3. Owner reserves the right to limit selection to products with warranties not in conflict with requirements of the Contract Documents.
4. Where products are accompanied by the term "as selected," Architect will make selection.
5. Where products are accompanied by the term "match sample," sample to be matched is Architect's.
6. Descriptive, performance, and reference standard requirements in the Specifications establish "salient characteristics" of products.
7. Or Equal: Where products are specified by name and accompanied by the term "or equal" or "or approved equal" or "or approved," comply with provisions in Part 2 "Comparable Products" Article to obtain approval for use of an unnamed product.

B. Product Selection Procedures:

1. Product: Where Specifications name a single product and manufacturer, provide the named product that complies with requirements.
2. Manufacturer/Source: Where Specifications name a single manufacturer or source, provide a product by the named manufacturer or source that complies with requirements.
3. Products: Where Specifications include a list of names of both products and manufacturers, provide one of the products listed that complies with requirements.
4. Manufacturers: Where Specifications include a list of manufacturers' names, provide a product by one of the manufacturers listed that complies with requirements.
5. Available Products: Where Specifications include a list of names of both products and manufacturers, provide one of the products listed, or an unnamed product, that complies with requirements. Comply with provisions in Part 2 "Comparable Products" Article for consideration of an unnamed product.
6. Available Manufacturers: Where Specifications include a list of manufacturers, provide a product by one of the manufacturers listed, or an unnamed manufacturer, that complies with requirements. Comply with provisions in Part 2 "Comparable Products" Article for consideration of an unnamed product.
7. Product Options: Where Specifications indicate that sizes, profiles, and dimensional requirements on Drawings are based on a specific product or system, provide the specified product or system. Comply with provisions in Part 2 "Product Substitutions" Article for consideration of an unnamed product or system.
8. Basis-of-Design Product: Where Specifications name a product and include a list of manufacturers, provide the specified product or a comparable product by one of the other named manufacturers. Drawings and Specifications indicate sizes, profiles, dimensions, and other characteristics that are based on the product named. Comply with provisions in Part 2 "Comparable Products" Article for consideration of an unnamed product by the other named manufacturers.
9. Visual Matching Specification: Where Specifications require matching an established Sample, select a product that complies with requirements and matches Architect's/Engineer's sample. Architect's decision will be final on whether a proposed product matches.

NOT FOR BID

a. If no product available within specified category matches and complies with other specified requirements, comply with provisions in Part 2 "Product Substitutions" Article for proposal of product.

10. Visual Selection Specification: Where Specifications include the phrase "as selected from manufacturer's colors, patterns, textures" or a similar phrase, select a product that complies with other specified requirements.

a. Standard Range: Where Specifications include the phrase "standard range of colors, patterns, textures" or similar phrase, Architect will select color, pattern, density, or texture from manufacturer's product line that does not include premium items.
b. Full Range: Where Specifications include the phrase "full range of colors, patterns, textures" or similar phrase, Architect will select color, pattern, density, or texture from manufacturer's product line that includes both standard and premium items.

NOT FOR BID

2.2 PRODUCT SUBSTITUTIONS

A. Timing: Architect will consider requests for substitution if received within **30** days after the Notice to Proceed. Requests received after that time may be considered or rejected at discretion of Architect.

B. Conditions: Architect/Engineer will consider Contractor's request for substitution when the following conditions are satisfied. If the following conditions are not satisfied, Architect will return requests without action, except to record noncompliance with these requirements:

1. Requested substitution offers Owner a substantial advantage in cost, time, energy conservation, or other considerations, after deducting additional responsibilities Owner must assume. Owner's additional responsibilities may include compensation to Architect for redesign and evaluation services, increased cost of other construction by Owner, and similar considerations.
2. Requested substitution does not require extensive revisions to the Contract Documents.
3. Requested substitution is consistent with the Contract Documents and will produce indicated results.
4. Substitution request is fully documented and properly submitted.
5. Requested substitution will not adversely affect Contractor's Construction Schedule.
6. Requested substitution has received necessary approvals of authorities having jurisdiction.
7. Requested substitution is compatible with other portions of the Work.
8. Requested substitution has been coordinated with other portions of the Work.
9. Requested substitution provides specified warranty.
10. If requested substitution involves more than one contractor, requested substitution has been coordinated with other portions of the Work, is uniform and consistent, is compatible with other products, and is acceptable to all contractors involved.

2.3 COMPARABLE PRODUCTS

A. Conditions: Architect/Engineer will consider Contractor's request for comparable product when the following conditions are satisfied. If the following conditions are not satisfied, Architect will return requests without action, except to record noncompliance with these requirements:

1. Evidence that the proposed product does not require extensive revisions to the Contract Documents that it is consistent with the Contract Documents and will produce the indicated results, and that it is compatible with other portions of the Work.
2. Detailed comparison of significant qualities of proposed product with those named in the Specifications. Significant qualities include attributes such as performance, weight, size, durability, visual effect, and specified features and requirements indicated.
3. Evidence that proposed product provides specified warranty.
4. List of similar installations for completed projects with project names and addresses and names and addresses of architects and owners, if requested.
5. Samples, if requested.

PART 3 - EXECUTION (Not Used)

NOT FOR BID

Knowledge for Creating and Sustaining the Built Environment

SUBSTITUTION REQUEST

(After the Bidding/Negotiating Phase)

NOT FOR BID

Project: _____ Substitution Request Number: _____

_____ From: _____

To: _____ Date: _____

_____ A/E Project Number: _____

Re: _____ Contract For: _____

Specification Title: _____ Description: _____

Section: _____ Page: _____ Article/Paragraph: _____

Proposed Substitution: _____

Manufacturer: _____ Phone: _____

Address: _____

Trade Name: _____ Model No.: _____

Installer: _____ Phone: _____

Address: _____

History: ☐ New product ☐ 1-4 years old ☐ 5-10 years old ☐ More than 10 years old

Differences between proposed substitution and specified product:

☐ Point-by-point comparative data attached — REQUIRED BY A/E

Reason for not providing specified item:

Similar Installation:

Project: _____ Architect: _____

Address: _____ Owner: _____

_____ Date Installed: _____

Proposed substitution affects other parts of Work: ☐ No ☐ Yes; explain _____

Savings to Owner for accepting substitution: _____ ($ _____).

Proposed substitution changes Contract Time: ☐ No ☐ Yes [Add] [Deduct] _____ days.

Supporting Data Attached: ☐ Drawings ☐ Product Data ☐ Samples ☐ Tests ☐ Reports ☐ _____

© Copyright 2007, Construction Specifications Institute,
99 Canal Center Plaza, Suite 300, Alexandria, VA 22314

Page 1 of 2

Form Version: June 2004
CSI Form 13.1A

SUBSTITUTION REQUEST

(After the Bidding/Negotiating Phase — Continued)

The Undersigned certifies:

- Proposed substitution has been fully investigated and determined to be equal or superior in all respects to specified product.
- Same warranty will be furnished for proposed substitution as for specified product.
- Same maintenance service and source of replacement parts, as applicable, is available.
- Proposed substitution will have no adverse effect on other trades and will not affect or delay progress schedule.
- Cost data as stated above is complete. Claims for additional costs related to accepted substitution which may subsequently become apparent are to be waived.
- Proposed substitution does not affect dimensions and functional clearances.
- Payment will be made for changes to building design, including A/E design, detailing, and construction costs caused by the substitution.
- Coordination, installation, and changes in the Work as necessary for accepted substitution will be complete in all respects.

Submitted by: _____

Signed by: _____

Firm: _____

Address: _____

_____

Telephone: _____

Attachments: ☐

A/E's REVIEW AND ACTION

☐ Substitution approved - Make submittals in accordance with Specification Section 01 25 00 Substitution Procedures.
☐ Substitution approved as noted - Make submittals in accordance with Specification Section 01 25 00 Substitution Procedures.
☐ Substitution rejected - Use specified materials.
☐ Substitution Request received too late - Use specified materials.

Signed by: _____ Date: _____

Additional Comments: ☐ Contractor ☐ Subcontractor ☐ Supplier ☐ Manufacturer ☐ A/E
☐ Other:

© Copyright 2007, Construction Specifications Institute,
99 Canal Center Plaza, Suite 300, Alexandria, VA 22314

Page 2 of 2

Form Version: June 2004
CSI Form 13.1A

NOT FOR BID

END OF SECTION 016000

NOT FOR BID

SECTION 017300 - EXECUTION REQUIREMENTS

PART 1 - GENERAL

1.1 RELATED DOCUMENTS

A. Drawings and general provisions of the Contract, including General and Supplementary Conditions and other Division 1 Specification Sections, apply to this Section.

1.2 SUMMARY

A. This Section includes general procedural requirements governing execution of the Work including, but not limited to, the following:

1. Construction layout.
2. General installation of products.
3. Coordination of Owner-installed products.
4. Progress cleaning.
5. Starting and adjusting.
6. Protection of installed construction.
7. Correction of the Work.

B. Related Sections include the following:

1. Division 1 Section "Project Management and Coordination" for procedures for coordinating field engineering with other construction activities.
2. Division 1 Section "Cutting and Patching" for procedural requirements for cutting and patching necessary for the installation or performance of other components of the Work.
3. Division 1 Section "Closeout Procedures" for submitting final property survey with Project Record Documents, recording of Owner-accepted deviations from indicated lines and levels, and final cleaning.
4. Division 02 Section "Selective Demolition" for demolition and removal of selected portions of the building.

PART 2 - PRODUCTS (Not Used)

PART 3 - EXECUTION

3.1 EXAMINATION

A. Existing Conditions: The existence and location of site improvements, utilities, and other construction indicated as existing are not guaranteed. Before beginning work, investigate and verify the existence and location of mechanical and electrical systems and other construction affecting the Work.

1. Before construction, verify the location and points of connection of utility services.

B. Existing Utilities: The existence and location of underground and other utilities and construction indicated as existing are not guaranteed. Before beginning sitework, investigate and verify the existence and location of underground utilities and other construction affecting the Work.

1. Before construction, verify the location and invert elevation at points of connection of sanitary sewer, storm sewer, and water-service piping; and underground electrical services.
2. Furnish location data for work related to Project that must be performed by public utilities serving Project site.

C. Acceptance of Conditions: Examine substrates, areas, and conditions, with Installer or Applicator present where indicated, for compliance with requirements for installation tolerances and other conditions affecting performance. Record observations.

1. Written Report: Where a written report listing conditions detrimental to performance of the Work is required by other Sections, include the following:

   a. Description of the Work.
   b. List of detrimental conditions, including substrates.
   c. List of unacceptable installation tolerances.
   d. Recommended corrections.

2. Verify compatibility with and suitability of substrates, including compatibility with existing finishes or primers.
3. Examine roughing-in for mechanical and electrical systems to verify actual locations of connections before equipment and fixture installation.
4. Examine walls, floors, and roofs for suitable conditions where products and systems are to be installed.
5. Proceed with installation only after unsatisfactory conditions have been corrected. Proceeding with the Work indicates acceptance of surfaces and conditions.

NOT FOR BID

NOT FOR BID

3.2 PREPARATION

A. Existing Utility Information: Furnish information to local utility that is necessary to adjust, move, or relocate existing utility structures, utility poles, lines, services, or other utility appurtenances located in or affected by construction. Coordinate with authorities having jurisdiction.

B. Field Measurements: Take field measurements as required to fit the Work properly. Recheck measurements before installing each product. Where portions of the Work are indicated to fit to other construction, verify dimensions of other construction by field measurements before fabrication. Coordinate fabrication schedule with construction progress to avoid delaying the Work.

C. Space Requirements: Verify space requirements and dimensions of items shown diagrammatically on Drawings.

D. Review of Contract Documents and Field Conditions: Immediately on discovery of the need for clarification of the Contract Documents, submit a request for information to Architect. Include a detailed description of problem encountered, together with recommendations for changing the Contract Documents. Submit requests on CSI Form 13.2A, "Request for Interpretation."

3.3 CONSTRUCTION LAYOUT

A. Verification: Before proceeding to lay out the Work, verify layout information shown on Drawings, in relation to the property survey and existing benchmarks. If discrepancies are discovered, notify Architect promptly.

B. Site Improvements: Locate and lay out site improvements, including pavements, grading, fill and topsoil placement, utility slopes, and invert elevations.

C. Building Lines and Levels: Locate and lay out control lines and levels for foundations including those required for mechanical and electrical work. Transfer survey markings and elevations for use with control lines and levels. Level foundations from two or more locations.

D. Record Log: Maintain a log of layout control work. Record deviations from required lines and levels. Include beginning and ending dates and times of surveys, weather conditions, name and duty of each survey party member, and types of instruments and tapes used. Make the log available for reference by Architect.

3.4 INSTALLATION

A. General: Locate the Work and components of the Work accurately, in correct alignment and elevation, as indicated.

1. Make vertical work plumb and make horizontal work level.
2. Where space is limited, install components to maximize space available for maintenance and ease of removal for replacement.

3. Conceal pipes, ducts, and wiring in finished areas, unless otherwise indicated.
4. Maintain minimum headroom clearance of 8 feet (2.4 m) in spaces without a suspended ceiling.

B. Comply with manufacturer's written instructions and recommendations for installing products in applications indicated.

C. Install products at the time and under conditions that will ensure the best possible results. Maintain conditions required for product performance until Substantial Completion.

D. Conduct construction operations so no part of the Work is subjected to damaging operations or loading in excess of that expected during normal conditions of occupancy.

E. Tools and Equipment: Do not use tools or equipment that produces harmful noise levels.

F. Templates: Obtain and distribute to the parties involved templates for work specified to be factory prepared and field installed. Check Shop Drawings of other work to confirm that adequate provisions are made for locating and installing products to comply with indicated requirements.

G. Anchors and Fasteners: Provide anchors and fasteners as required to anchor each component securely in place, accurately located and aligned with other portions of the Work.

1. Mounting Heights: Where mounting heights are not indicated, mount components at heights directed by Architect/engineer.
2. Allow for building movement, including thermal expansion and contraction.
3. Coordinate installation of anchorages. Furnish setting drawings, templates, and directions for installing anchorages, including sleeves, concrete inserts, anchor bolts, and items with integral anchors, that are to be embedded in concrete or masonry. Deliver such items to Project site in time for installation.

H. Joints: Make joints of uniform width. Where joint locations in exposed work are not indicated, arrange joints for the best visual effect. Fit exposed connections together to form hairline joints.

I. Hazardous Materials: Use products, cleaners, and installation materials that are not considered hazardous.

3.5 OWNER-INSTALLED PRODUCTS

A. Site Access: Provide access to Project site for Owner's construction forces.

B. Coordination: Coordinate construction and operations of the Work with work performed by Owner's construction forces.

1. Construction Schedule: Inform Owner of Contractor's preferred construction schedule for Owner's portion of the Work. Adjust construction schedule based on a mutually agreeable timetable. Notify Owner if changes to schedule are required due to differences in actual construction progress.

NOT FOR BID

2. Preinstallation Conferences: Include Owner's construction forces at preinstallation conferences covering portions of the Work that are to receive Owner's work. Attend preinstallation conferences conducted by Owner's construction forces if portions of the Work depend on Owner's construction.

NOT FOR BID

3.6 PROGRESS CLEANING

A. General: Clean Project site and work areas daily, including common areas. Coordinate progress cleaning for joint-use areas where more than one installer has worked. Enforce requirements strictly. Dispose of materials lawfully.

1. Comply with requirements in NFPA 241 for removal of combustible waste materials and debris.
2. Do not hold materials more than 7 days during normal weather or 3 days if the temperature is expected to rise above 80 deg F (27 deg C).
3. Containerize hazardous and unsanitary waste materials separately from other waste. Mark containers appropriately and dispose of legally, according to regulations.

B. Site: Maintain Project site free of waste materials and debris.

C. Work Areas: Clean areas where work is in progress to the level of cleanliness necessary for proper execution of the Work.

1. Remove liquid spills promptly.
2. Where dust would impair proper execution of the Work, broom-clean or vacuum the entire work area, as appropriate.

D. Installed Work: Keep installed work clean. Clean installed surfaces according to written instructions of manufacturer or fabricator of product installed, using only cleaning materials specifically recommended. If specific cleaning materials are not recommended, use cleaning materials that are not hazardous to health or property and that will not damage exposed surfaces.

E. Concealed Spaces: Remove debris from concealed spaces before enclosing the space.

F. Exposed Surfaces in Finished Areas: Clean exposed surfaces and protect as necessary to ensure freedom from damage and deterioration at time of Substantial Completion.

G. Waste Disposal: Burying or burning waste materials on-site will not be permitted. Washing waste materials down sewers or into waterways will not be permitted.

H. During handling and installation, clean and protect construction in progress and adjoining materials already in place. Apply protective covering where required to ensure protection from damage or deterioration at Substantial Completion.

I. Clean and provide maintenance on completed construction as frequently as necessary through the remainder of the construction period. Adjust and lubricate operable components to ensure operability without damaging effects.

J. Limiting Exposures: Supervise construction operations to assure that no part of the construction, completed or in progress, is subject to harmful, dangerous, damaging, or otherwise deleterious exposure during the construction period.

3.7 PROTECTION OF INSTALLED CONSTRUCTION

A. Provide final protection and maintain conditions that ensure installed Work is without damage or deterioration at time of Substantial Completion.

B. Comply with manufacturer's written instructions for temperature and relative humidity.

3.8 CORRECTION OF THE WORK

A. Repair or remove and replace defective construction. Restore damaged substrates and finishes. Comply with requirements in Division 1 Section "Cutting and Patching."

1. Repairing includes replacing defective parts, refinishing damaged surfaces, touching up with matching materials, and properly adjusting operating equipment.

B. Restore permanent facilities used during construction to their specified condition.

C. Remove and replace damaged surfaces that are exposed to view if surfaces cannot be repaired without visible evidence of repair.

END OF SECTION 017000

NOT FOR BID

NOT FOR BID

SECTION 017329 - CUTTING AND PATCHING

PART 1 - GENERAL

1.1 RELATED DOCUMENTS

A. Drawings and general provisions of the Contract, including General and Supplementary Conditions and other Division 1 Specification Sections, apply to this Section.

1.2 SUMMARY

A. This Section includes procedural requirements for cutting and patching.

B. Related Sections include the but are not limited to the following:

1. Division 2 Section "Selective Demolition" for demolition of selected portions of the building for alterations.

1.3 DEFINITIONS

A. Cutting: Removal of existing construction necessary to permit installation or performance of other Work.

B. Patching: Fitting and repair work required to restore surfaces to original conditions after installation of other Work.

1.4 QUALITY ASSURANCE

A. Structural Elements: Do not cut and patch structural elements in a manner that could change their load-carrying capacity or load-deflection ratio.

B. Operational Elements: Do not cut and patch the following operating elements and related components in a manner that results in reducing their capacity to perform as intended or that result in increased maintenance or decreased operational life or safety.

1. Primary operational systems and equipment.
2. Fire-protection systems.
3. Control systems.
4. Communication systems.
5. Electrical wiring systems.

C. Miscellaneous Elements: Do not cut and patch the following elements or related components in a manner that could change their load-carrying capacity, which results in reducing their capacity

to perform as intended, or that result in increased maintenance or decreased operational life or safety.

1. Water, moisture, or vapor barriers.
2. Membranes and flashings.
3. Piping and ductwork.

D. Visual Requirements: Do not cut and patch construction in a manner that results in visual evidence of cutting and patching. Do not cut and patch construction exposed on the exterior or in occupied spaces in a manner that would, in Architect's opinion, reduce the building's aesthetic qualities. Remove and replace construction that has been cut and patched in a visually unsatisfactory manner.

E. Cutting and Patching Conference: Before proceeding, meet at Project site with parties involved in cutting and patching, including mechanical and electrical trades. Review areas of potential interference and conflict. Coordinate procedures and resolve potential conflicts before proceeding.

NOT FOR BID

PART 2 - PRODUCTS

2.1 MATERIALS

A. General: Comply with requirements specified in other Sections of these Specifications.

B. Existing Materials: Use materials identical to existing materials. For exposed surfaces, use materials that visually match existing adjacent surfaces to the fullest extent possible.

1. If identical materials are unavailable or cannot be used, use materials that, when installed, will match the visual and functional performance of existing materials.

PART 3 - EXECUTION

3.1 EXAMINATION

A. Examine surfaces to be cut and patched and conditions under which cutting and patching are to be performed.

1. Compatibility: Before patching, verify compatibility with and suitability of substrates, including compatibility with existing finishes or primers.
2. Proceed with installation only after unsafe or unsatisfactory conditions have been corrected.

3.2 PREPARATION

A. Temporary Support: Provide temporary support of Work to be cut.

B. Protection: Protect existing construction during cutting and patching to prevent damage. Provide protection from adverse weather conditions for portions of Project that might be exposed during cutting and patching operations.

C. Adjoining Areas: Avoid interference with use of adjoining areas or interruption of free passage to adjoining areas.

3.3 PERFORMANCE

A. General: Employ skilled workers to perform cutting and patching. Proceed with cutting and patching at the earliest feasible time, and complete without delay.

1. Cut existing construction to provide for installation of other components or performance of other construction, and subsequently patch as required to restore surfaces to their original condition.

B. Cutting: Cut existing construction by sawing, drilling, breaking, chipping, grinding, and similar operations, including excavation, using methods least likely to damage elements retained or adjoining construction. If possible, review proposed procedures with original Installer; comply with original Installer's written recommendations.

1. In general, use hand or small power tools designed for sawing and grinding, not hammering and chopping. Cut holes and slots as small as possible, neatly to size required, and with minimum disturbance of adjacent surfaces. Temporarily cover openings when not in use.
2. Existing Finished Surfaces: Cut or drill from the exposed or finished side into concealed surfaces.
3. Concrete & Masonry: Cut using a cutting machine, such as an abrasive saw or a diamond-core drill.
4. Excavating and Backfilling: Comply with requirements in applicable Division 2 Sections where required by cutting and patching operations.
5. Proceed with patching after construction operations requiring cutting are complete.

C. Patching: Patch construction by filling, repairing, refinishing, closing up, and similar operations following performance of other Work. Patch with durable seams that are as invisible as possible. Provide materials and comply with installation requirements specified in other Sections of these Specifications.

1. Inspection: Where feasible, test and inspect patched areas after completion to demonstrate integrity of installation.
2. Exposed Finishes: Restore exposed finishes of patched areas and extend finish restoration into retained adjoining construction in a manner that will eliminate evidence of patching and refinishing.

NOT FOR BID

3. Floors and Walls: Where walls or partitions that are removed extend one finished area into another, patch and repair floor and wall surfaces in the new space. Provide an even surface of uniform finish, color, texture, and appearance. Remove existing floor and wall coverings and replace with new materials, if necessary, to achieve uniform color and appearance.

    a. Where patching occurs in a painted surface, apply primer and intermediate paint coats over the patch and apply final paint coat over entire unbroken surface containing the patch. Provide additional coats until patch blends with adjacent surfaces.

4. Ceilings: Patch, repair, or rehang existing ceilings as necessary to provide an even-plane surface of uniform appearance.
5. Exterior Building Enclosure: Patch components in a manner that restores enclosure to a weathertight condition.

END OF SECTION 017329

NOT FOR BID

NOT FOR BID

SECTION 017419 - CONSTRUCTION WASTE MANAGEMENT AND DISPOSAL

PART 1 - GENERAL

1.1 RELATED DOCUMENTS

A. Drawings and general provisions of the Contract, including General and Supplementary Conditions and other Division 01 Specification Sections, apply to this Section.

1.2 SUMMARY

A. Section includes administrative and procedural requirements for the following:

1. Salvaging nonhazardous demolition and construction waste.
2. Recycling nonhazardous demolition and construction waste.
3. Disposing of nonhazardous demolition and construction waste.

B. Related Requirements:

1. Section 024119 "Selective Demolition" for disposition of waste resulting from partial demolition of buildings, structures, and site improvements.
2. Section 042000 "Unit Masonry" for disposal requirements for masonry waste.

1.3 DEFINITIONS

A. Construction, Demolition and Land Clearing (CDL) Waste: Includes all non-hazardous solid wastes resulting from construction, remodeling, alterations, repair, demolition and land clearing. Includes material that is recycled, reused, salvaged or disposed as garbage. Construction waste includes packaging.

B. Disposal: Removal off-site of demolition and construction waste and subsequent sale, recycling, reuse, or deposit in landfill or incinerator acceptable to authorities having jurisdiction.

C. Recycle: The process of sorting, treating and reconstituting materials for the purpose of using the material in the manufacture of a new product.

D. Reuse: Making use of a material without altering its form. Materials can be reused on-site or reused on other projects off-site. Examples include, but are not limited to the following: Crushing or grinding of concrete for use as sub-base material. Chipping of land clearing debris for use of mulch.

E. Salvage: Recovery of demolition or construction waste and subsequent sale, reuse in another facility or sale to a third party.

F. Salvage and Reuse: Recovery of demolition or construction waste and subsequent incorporation into the Work.

G. Source-Separated CDL Recycling: The process of separating recyclable materials in separate containers as they are generated on the job-site. The separated materials are hauled directly to a recycling facility or transfer station.

H. Co-mingled CDL Recycling: The process of collecting mixed recyclable materials in one container on-site. The container is taken to a material recovery facility where materials are separated for recycling.

I. Approved Recycling Facility: Any of the following:

1. A facility that can legally accept CDL waste materials for the purpose of processing the materials into an altered form for the manufacture of a new product.
2. Material Recovery Facility: A general term used to describe a waste-sorting facility. Mechanical, hand-separation, or a combination of both procedures, are used to recover recyclable materials.

NOT FOR BID

1.4 PERFORMANCE REQUIREMENTS

A. General: Achieve end-of-Project rates for salvage/recycling of 75 percent CDL waste by weight from the landfill by one or a combination of the following activities:

1. Salvage.
2. Reuse.
3. Source-Separated CDL Recycling.
4. Co-mingled CDL Recycling.

B. CDL waste materials that can be salvaged, reused or recycled include, but are not limited to, the following:

1. Demolition Waste:

a. Acoustical ceiling tiles.
b. Asphalt paving.
c. Asphalt shingles.
d. Carpet and carpet pad.
e. Concrete.
f. Concrete reinforcing steel.
g. Concrete masonry units.
h. Doors and frames.
i. Door hardware.
j. Field office waste including office paper, cans, plastic and office cardboard.
k. Fluorescent lamps and ballasts.
l. Glazing.
m. Gypsum board.

n. Insulation.
o. Land clearing debris (vegetation, stumpage, dirt, etc.).
p. Membrane and built-up Roofing.
q. Metals.
r. Metal studs.
s. Paint (through hazardous waste outlets).
t. Plastic film (sheeting, shrink wrap and packaging),
u. Plywood and oriented strand board.
v. Rough hardware.
w. Structural and miscellaneous steel.
x. Windows.
y. Wood.
z. Equipment.
aa. Piping.
bb. Supports and hangers.
cc. Valves.
dd. Sprinklers.
ee. Mechanical equipment.
ff. Refrigerants.
gg. Electrical conduit.
hh. Copper wiring.
ii. Lighting fixtures.
jj. Electrical devices.
kk. Switchgear and panelboards.
ll. Transformers.

2. Construction Waste:

a. Acoustical ceiling tiles.
b. Asphalt paving.
c. Asphalt shingles.
d. Carpet and carpet pad.
e. Concrete.
f. Concrete reinforcing steel.
g. Concrete masonry units.
h. Doors and frames.
i. Door hardware.
j. Field office waste including office paper, cans, plastic and office cardboard.
k. Fluorescent lamps and ballasts.
l. Glazing.
m. Gypsum board.
n. Insulation.
o. Land clearing debris (vegetation, stumpage, dirt, etc.).
p. Membrane and built-up Roofing.
q. Metals.
r. Metal studs.
s. Paint (through hazardous waste outlets).
t. Plastic film (sheeting, shrink wrap and packaging),

NOT FOR BID

u. Plywood and oriented strand board.
v. Rough hardware.
w. Structural and miscellaneous steel.
x. Windows.
y. Wood.
z. Piping.
aa. Electrical conduit.
bb. Packaging: Regardless of salvage/recycle goal indicated in "General" Paragraph above, salvage or recycle 100 percent of the following uncontaminated packaging materials:

1) Paper.
2) Cardboard.
3) Boxes.
4) Plastic sheet and film.
5) Polystyrene packaging.
6) Wood crates.
7) Plastic pail.

NOT FOR BID

1.5 ACTION SUBMITTALS

A. Waste Management Plan: Submit plan within 30 days of date established for the Notice of Award.

B. Waste Management Report: Submit report with each application for payment.

1.6 INFORMATIONAL SUBMITTALS

A. Waste Reduction Progress Reports: Concurrent with each Application for Payment, submit report:

1. Material category.
2. Generation point of waste.
3. Total quantity of waste in tons (tonnes).
4. Quantity of waste salvaged, both estimated and actual in tons (tonnes).
5. Quantity of waste recycled, both estimated and actual in tons (tonnes).
6. Total quantity of waste recovered (salvaged plus recycled) in tons (tonnes).
7. Total quantity of waste recovered (salvaged plus recycled) as a percentage of total waste.

B. Records of Donations: Indicate receipt and acceptance of salvageable waste donated to individuals and organizations. Indicate whether organization is tax exempt.

C. Records of Sales: Indicate receipt and acceptance of salvageable waste sold to individuals and organizations. Indicate whether organization is tax exempt.

D. Recycling and Processing Facility Records: Indicate receipt and acceptance of recyclable waste by recycling and processing facilities licensed to accept them. Include manifests, weight tickets, receipts, and invoices.

E. Landfill and Incinerator Disposal Records: Indicate receipt and acceptance of waste by landfills and incinerator facilities licensed to accept them. Include manifests, weight tickets, receipts, and invoices.

F. Qualification Data: For refrigerant recovery technician.

G. Statement of Refrigerant Recovery: Signed by refrigerant recovery technician responsible for recovering refrigerant, stating that all refrigerant that was present was recovered and that recovery was performed according to EPA regulations. Include name and address of technician and date refrigerant was recovered.

NOT FOR BID

1.7 QUALITY ASSURANCE

A. Waste Management Coordinator Qualifications: Experienced firm, with a record of successful waste management coordination of projects with similar requirements, that employs a LEED Accredited Professional, certified by the USGBC as waste management coordinator.

B. Refrigerant Recovery Technician Qualifications: Certified by EPA-approved certification program.

C. Regulatory Requirements: Conduct construction waste management activities in accordance with hauling and disposal regulations of all authorities having jurisdiction and all other applicable laws and ordinances.

D. Waste Management Conference: Conduct conference at Project site to comply with requirements in Section 013100 "Project Management and Coordination." Review methods and procedures related to waste management including, but not limited to, the following:

1. Review and discuss waste management plan including responsibilities of waste management coordinator.
2. Review requirements for documenting quantities of each type of waste and its disposition.
3. Review and finalize procedures for materials separation and verify availability of containers and bins needed to avoid delays.
4. Review procedures for periodic waste collection and transportation to recycling and disposal facilities.
5. Review waste management requirements for each trade.
6. Attendees: Inform the following individuals, whose presence is required, of date and time of meeting.

a. Owner.
b. Architect/Engineer.
c. Contractor's superintendent.

d. Major subcontractors.
e. Waste Management Coordinator.
f. Other concerned parties.

7. Minutes: Record discussion. Distribute meeting minutes to all participants. Note: If there is an Architectural/Engineering consultant contracted by the State of Delaware, they will perform this role.

NOT FOR BID

1.8 WASTE MANAGEMENT PLAN

A. General: Develop a waste management plan according to ASTM E 1609 and requirements in this Section. Plan shall consist of waste identification, waste reduction work plan, and cost/revenue analysis. Distinguish between demolition and construction waste. Indicate quantities by weight or volume, but use same units of measure throughout waste management plan.

B. Waste Identification: Indicate anticipated types and quantities of demolition, site-clearing and construction waste generated by the Work. List all assumptions made for the quantities estimates.

C. Waste Reduction Work Plan: List each type of waste and whether it will be salvaged, recycled, or disposed of in landfill or incinerator. The plan shall include the following information:

1. Types and estimated quantities, by weight, of CDL waste expected to be generated during demolition and construction.
2. Proposed methods for CDL waste salvage, reuse, recycling and disposal during demolition including, but not limited to, one or more of the following:

a. Contracting with a deconstruction specialist to salvage materials generated,
b. Selective salvage as part of demolition contractor's work,
c. Reuse of materials on-site or sale or donation to a third party.

3. Proposed methods for salvage, reuse, recycling and disposal during construction including, but not limited to, one or more of the following:

a. Requiring subcontractors to take their CDL waste to a recycling facility;
b. Contracting with a recycling hauler to haul recyclable CDL waste to an approved recycling or material recovery facility;
c. Processing and reusing materials on-site;
d. Self-hauling to a recycling or material recovery facility.

4. Name of recycling or material recovery facility receiving the CDL wastes.
5. Handling and Transportation Procedures: Include method that will be used for separating recyclable waste including sizes of containers, container labeling, and designated location on project site where materials separation will be located.

D. Cost/Revenue Analysis: Indicate total cost of waste disposal as if there was no waste management plan and net additional cost or net savings resulting from implementing waste management plan. Include the following:

1. Total quantity of waste.
2. Estimated cost of disposal (cost per unit). Include hauling and tipping fees and cost of collection containers for each type of waste.
3. Total cost of disposal (with no waste management).
4. Revenue from salvaged materials.
5. Revenue from recycled materials.
6. Savings in hauling and tipping fees by diverting materials.
7. Savings in hauling and tipping fees that are avoided.
8. Handling and transportation costs including cost of collection containers for each type of waste.
9. Net additional cost or net savings from waste management plan.

NOT FOR BID

PART 2 - PRODUCTS (Not Used)

PART 3 - EXECUTION

3.1 CONSTRUCTION WASTE MANAGEMENT, GENERAL

A. Provide containers for CDL waste that is to be recycled clearly labeled as such with a list of acceptable and unacceptable materials. The list of acceptable materials must be the same as the materials recycled at the receiving material recovery facility or recycling processor.

B. The collection containers for recyclable CDL waste must contain no more than 10% non-recyclable materials, by volume.

C. Provide containers for CDL waste that is disposed in a landfill clearly labeled as such.

D. Use detailed material estimates to reduce risk of unplanned and potentially wasteful cuts.

E. To the greatest extent possible, include in material purchasing agreements a waste reduction provision requesting that materials and equipment be delivered in packaging made of recyclable material, that they reduce the amount of packaging, that packaging be taken back for reuse or recycling, and to take back all unused product. Insure that subcontractors require the same provisions in their purchase agreements.

F. Conduct regular visual inspections of dumpsters and recycling bins to remove contaminants.

3.2 SOURCE SEPARATION

A. General: Contractor shall separate recyclable materials from CDL waste to the maximum extent possible. Separate recyclable materials by type.

1. Provide containers, clearly labeled, by type of separated materials or provide other storage method for managing recyclable materials until they are removed from Project site.
2. Stockpile processed materials on-site without intermixing with other materials. Place, grade, and shape stockpiles to drain surface water and to minimize pest attraction. Cover to prevent windblown dust.
3. Stockpile materials away from demolition area. Do not store within drip line of remaining trees.
4. Store components off the ground and protect from weather.

NOT FOR BID

3.3 CO-MINGLED RECYCLING

A. General: Do not put CDL waste that will be disposed in a landfill into a co-mingled CDL waste recycling container.

3.4 REMOVAL OF CONSTRUCTION WASTE MATERIALS

A. Remove CDL waste materials from project site on a regular basis. Do not allow CDL waste to accumulate on-site.

B. Transport CDL waste materials off Owner's property and legally dispose of them.

C. Burning of CDL waste is not permitted.

WASTE MANAGEMENT PROGRESS REPORT					
		Disposed in Municipal Solid Waste landfill	**Diverted from Landfill by Recycling, Salvage or Reuse**		
Material Category			Recycled	Salvaged	Reused
1.	Acoustical Ceiling Tiles				
2.	Asphalt				
3.	Asphalt Shingles				
4.	Cardboard Packaging				
5.	Carpet & Carpet Pad				
6.	Drywall				

7.	Concrete				
8.	Fluorescent Lamps and Ballasts				
9.	Land Clearing Debris (Vegetation, Stumpage & dirt)				
10.	Metals				
11.	Paint (Through Hazardous Waste Outlets)				
12.	Wood				
13.	Plastic Film (Sheeting, Shrink Wrap & Packaging)				
14.	Window Glass				
15.	Field Office waste (Office Paper, Aluminum Cans, Glass, Plastic and Coffee Cardboard)				
16.	Other (Insert Description)				
17.	Other (Insert Description)				
	Total (In Weight)		(TOTAL OF ALL ABOVE VALUES – IN WEIGHT)		
Percentage of Waste Diverted			(TOTAL WASTE DIVIDED BY TOTAL DIVERTED)		

NOT FOR BID

END OF SECTION 017419

(THIS PAGE INTENTIONALLY LEFT BLANK)

NOT FOR BID

NOT FOR BID

SECTION 017700 - CLOSEOUT PROCEDURES

PART 1 - GENERAL

1.1 RELATED DOCUMENTS

A. Drawings and general provisions of the Contract, including General and Supplementary Conditions and other Division 1 Specification Sections, apply to this Section.

1.2 SUMMARY

A. This Section includes administrative and procedural requirements for contract closeout, including, but not limited to, the following:

1. Inspection procedures.
2. Project Record Documents.
3. Operation and maintenance manuals.
4. Warranties.
5. Instruction of Owner's personnel.
6. Final cleaning.

B. Related Sections include the following:

1. Division 1 Section "Payment Procedures" for requirements for Applications for Payment for Substantial and Final Completion.
2. Division 1 Section "Project Record Documents" for submitting Record Drawings, Record Specifications, and Record Product Data.
3. Division 1 Section "Operation and Maintenance Data" for operation and maintenance manual requirements.
4. Divisions 02 through 33 Sections for specific closeout and special cleaning requirements for the Work in those Sections.

1.3 SUBSTANTIAL COMPLETION

A. Preliminary Procedures: Before requesting inspection for determining date of Substantial Completion, complete the following. List items below that are incomplete in request.

1. Prepare a list of items to be completed and corrected (punch list), the value of items on the list, and reasons why the Work is not complete.
2. Advise Owner of pending insurance changeover requirements.
3. Submit specific warranties, workmanship bonds, maintenance service agreements, final certifications, and similar documents.
4. Obtain and submit releases permitting Owner unrestricted use of the Work and access to services and utilities. Include occupancy permits, operating certificates, and similar releases.

5. Prepare and submit Project Record Documents, operation and maintenance manuals, damage or settlement surveys, and similar final record information.
6. Deliver tools, spare parts, extra materials, and similar items to location designated by Owner. Label with manufacturer's name and model number where applicable.
7. Complete startup testing of systems.
8. Submit test/adjust/balance records.
9. Terminate and remove temporary facilities from Project site, along with mockups, construction tools, and similar elements.
10. Advise Owner of changeover in heat and other utilities.
11. Submit changeover information related to Owner's occupancy, use, operation, and maintenance.
12. Complete final cleaning requirements, including touchup painting.
13. Touch up and otherwise repair and restore marred exposed finishes to eliminate visual defects.

B. Inspection: Submit a written request for inspection for Substantial Completion. On receipt of request, Architect/Engineer will either proceed with inspection or notify Contractor of unfulfilled requirements. Architect/Engineer will prepare the Certificate of Substantial Completion after inspection or will notify Contractor of items, either on Contractor's list or additional items identified by Architect/Engineer, that must be completed or corrected before certificate will be issued.

1. Reinspection: Request reinspection when the Work identified in previous inspections as incomplete is completed or corrected.
2. Results of completed inspection will form the basis of requirements for Final Completion.

1.4 FINAL COMPLETION

A. Preliminary Procedures: Before requesting final inspection for determining date of Final Completion, complete the following:

1. Submit a final Application for Payment according to Division 1 Section "Payment Procedures."
2. Submit certified copy of Architect's/Engineer's Substantial Completion inspection list of items to be completed or corrected (punch list), endorsed and dated by Architect/Engineer. The certified copy of the list shall state that each item has been completed or otherwise resolved for acceptance.
3. Submit evidence of final, continuing insurance coverage complying with insurance requirements.
4. Submit pest-control final inspection report and warranty.
5. Instruct Owner's personnel in operation, adjustment, and maintenance of products, equipment, and systems. Submit demonstration and training videotapes.

B. Inspection: Submit a written request for final inspection for acceptance. On receipt of request, Architect/Engineer will either proceed with inspection or notify Contractor of unfulfilled requirements. Architect will prepare a final Certificate for Payment after inspection or will notify Contractor of construction that must be completed or corrected before certificate will be issued.

NOT FOR BID

1. Reinspection: Request reinspection when the Work identified in previous inspections as incomplete is completed or corrected.

1.5 LIST OF INCOMPLETE ITEMS (PUNCH LIST)

A. Preparation: Submit three copies of list. Include name and identification of each space and area affected by construction operations for incomplete items and items needing correction including, if necessary, areas disturbed by Contractor that are outside the limits of construction.

1. Organize list of spaces in sequential order, starting with exterior areas first and proceeding from lowest floor to highest floor.
2. Organize items applying to each space by major element, including categories for ceiling, individual walls, floors, equipment, and building systems.
3. Include the following information at the top of each page:

a. Project name.
b. Date.
c. Name of Architect.
d. Name of Contractor.
e. Page number.

NOT FOR BID

1.6 PROJECT RECORD DOCUMENTS

A. General: Do not use Project Record Documents for construction purposes. Protect Project Record Documents from deterioration and loss. Provide access to Project Record Documents for Architect's reference during normal working hours.

B. Record Drawings: Maintain and submit one original set of blue- or black-line white prints with two copies of Contract Drawings and Shop Drawings.

1. Mark Record Prints to show the actual installation where installation varies from that shown originally. Require individual or entity who obtained record data, whether individual or entity is Installer, subcontractor, or similar entity, to prepare the marked-up Record Prints.

a. Give particular attention to information on concealed elements that cannot be readily identified and recorded later.
b. Accurately record information in an understandable drawing technique.
c. Record data as soon as possible after obtaining it. Record and check the markup before enclosing concealed installations.
d. Mark Contract Drawings or Shop Drawings, whichever is most capable of showing actual physical conditions, completely and accurately. Where Shop Drawings are marked, show cross-reference on Contract Drawings.

2. Mark record sets with erasable, red-colored pencil. Use other colors to distinguish between changes for different categories of the Work at the same location.

3. Mark important additional information that was either shown schematically or omitted from original Drawings.
4. Note Construction Change Directive numbers, Change Order numbers, alternate numbers, and similar identification where applicable.
5. Identify and date each Record Drawing; include the designation "PROJECT RECORD DRAWING" in a prominent location. Organize in manageable sets; bind each set with durable paper cover sheets. Include identification on cover sheets.

C. Record Specifications: Submit one copy of Project's Specifications, including addenda and contract modifications. Mark copy to indicate actual product installation where installation varies from that indicated in Specifications, addenda, and contract modifications.

1. Give particular attention to information on concealed products and installations that cannot be readily identified and recorded later.
2. Mark copy with the proprietary name and model number of products, materials, and equipment furnished, including substitutions and product options selected.
3. Note related Change Orders, Record Drawings, and Product Data, where applicable.

D. Record Product Data: Submit three copies of each Product Data submittal. Mark one set to indicate the actual product installation where installation varies substantially from that indicated in Product Data.

1. Give particular attention to information on concealed products and installations that cannot be readily identified and recorded later.
2. Include significant changes in the product delivered to Project site and changes in manufacturer's written instructions for installation.
3. Note related Change Orders, Record Drawings, and Record Specifications, where applicable.

E. Miscellaneous Record Submittals: Assemble miscellaneous records required by other Specification Sections for miscellaneous record keeping and submittal in connection with actual performance of the Work. Bind or file miscellaneous records and identify each, ready for continued use and reference.

1.7 OPERATION AND MAINTENANCE MANUALS

A. Assemble three complete sets of operation and maintenance data indicating the operation and maintenance of each system, subsystem, and piece of equipment not part of a system. Include operation and maintenance data required in individual Specification Sections and as follows:

1. Maintenance Data:

   a. Manufacturer's information, including list of spare parts.
   b. Name, address, and telephone number of Installer or supplier.
   c. Maintenance procedures.
   d. Maintenance and service schedules for preventive and routine maintenance.
   e. Maintenance record forms.
   f. Sources of spare parts and maintenance materials.

NOT FOR BID

g. Copies of maintenance service agreements.
h. Copies of warranties and bonds.

B. Organize operation and maintenance manuals into suitable sets of manageable size. Bind and index data in heavy-duty, 3-ring, vinyl-covered, loose-leaf binders, in thickness necessary to accommodate contents, with pocket inside the covers to receive folded oversized sheets. Identify each binder on front and spine with the printed title "OPERATION AND MAINTENANCE MANUAL," Project name, and subject matter of contents.

NOT FOR BID

1.8 WARRANTIES

A. Submittal Time: Submit written warranties on request of Architect for designated portions of the Work where commencement of warranties other than date of Substantial Completion is indicated.

B. Organize warranty documents into an orderly sequence based on the table of contents of the Project Manual.

1. Bind warranties and bonds in heavy-duty, 3-ring, vinyl-covered, loose-leaf binders, thickness as necessary to accommodate contents, and sized to receive 8-1/2-by-11-inch paper.
2. Provide heavy paper dividers with plastic-covered tabs for each separate warranty. Mark tab to identify the product or installation. Provide a typed description of the product or installation, including the name of the product and the name, address, and telephone number of Installer.
3. Identify each binder on the front and spine with the typed or printed title "WARRANTIES," Project name, and name of Contractor.

C. Provide additional copies of each warranty to include in each operation and maintenance manual.

PART 2 - PRODUCTS

2.1 MATERIALS

A. Cleaning Agents: Use cleaning materials and agents recommended by manufacturer or fabricator of the surface to be cleaned. Do not use cleaning agents that are potentially hazardous to health or property or that might damage finished surfaces.

PART 3 - EXECUTION

3.1 FINAL CLEANING

A. General: Provide final cleaning. Conduct cleaning and waste-removal operations to comply with local laws and ordinances and Federal and local environmental and antipollution regulations.

B. Cleaning: Employ experienced workers or professional cleaners for final cleaning. Clean each surface or unit to condition expected in an average commercial building cleaning and maintenance program. Comply with manufacturer's written instructions.

1. Complete the following cleaning operations before requesting inspection for certification of Substantial Completion for entire Project or for portion of Project:

   a. Clean Project site, yard, and grounds, in areas disturbed by construction activities, including landscape development areas, of rubbish, waste material, litter, and other foreign substances. Provide a magnetic sweep of all areas around the building to retrieve stray nails, screws and other fasteners or metal shards.
   b. Sweep paved areas broom clean. Remove petrochemical spills, stains, and other foreign deposits.
   c. Rake grounds that are neither planted nor paved to a smooth, even-textured surface.
   d. Remove tools, construction equipment, machinery, and surplus material from Project site.
   e. Clean exposed exterior and interior hard-surfaced finishes to a dirt-free condition, free of stains, films, and similar foreign substances. Avoid disturbing natural weathering of exterior surfaces. Restore reflective surfaces to their original condition.
   f. Remove debris and surface dust from limited access spaces, including roofs, plenums, shafts, trenches, equipment vaults, manholes, attics, and similar spaces.
   g. Sweep concrete floors broom clean in unoccupied spaces.
   h. Clean transparent materials, including glass in doors and windows. Remove glazing compounds and other noticeable, vision-obscuring materials. Replace chipped or broken glass and other damaged transparent materials.
   i. Remove labels that are not permanent.
   j. Touch up and otherwise repair and restore marred, exposed finishes and surfaces. Replace finishes and surfaces that cannot be satisfactorily repaired or restored or that already show evidence of repair or restoration.

      1) Do not paint over "UL" and similar labels, including mechanical and electrical nameplates.

   k. Wipe surfaces of mechanical and electrical equipment, and similar equipment. Remove excess lubrication, paint and mortar droppings, and other foreign substances.

C. Comply with safety standards for cleaning. Do not burn waste materials. Do not bury debris or excess materials on Owner's property. Do not discharge volatile, harmful, or dangerous materials into drainage systems. Remove waste materials from Project site and dispose of lawfully.

END OF SECTION 017700

NOT FOR BID

NOT FOR BID

SECTION 017839 - PROJECT RECORD DOCUMENTS

PART 1 - GENERAL

1.1 RELATED DOCUMENTS

A. Drawings and general provisions of the Contract, including General and Supplementary Conditions and other Division 1 Specification Sections, apply to this Section.

1.2 SUMMARY

A. This Section includes administrative and procedural requirements for Project Record Documents, including the following:

1. Record Drawings.
2. Record Specifications.
3. Record Product Data.

B. Related Sections include but are not limited to the following:

1. Division 1 Section "Closeout Procedures" for general closeout procedures and maintenance manual requirements.
2. Division 1 Section "Operation and Maintenance Data" for operation and maintenance manual requirements.
3. Divisions 02 through 33 Sections for specific requirements for project record documents of the Work in those Sections.

1.3 SUBMITTALS

A. Record Drawings: Comply with the following:

1. Number of Copies: Submit copies of Record Drawings as follows:

a. Final Submittal: Submit three sets of marked-up Record Prints and one set of record transparencies. Print each Drawing, whether or not changes and additional information were recorded.

B. Record Specifications: Submit three copies of Project's Specifications, including addenda and contract modifications.

C. Record Product Data: Submit three copies of each Product Data submittal.

1. Where Record Product Data is required as part of operation and maintenance manuals, submit marked-up Product Data as an insert in the manual instead of submittal as Record Product Data.

NOT FOR BID

1.4 RECORD DRAWINGS

A. Record Prints: Maintain one set of blue- or black-line white prints of the Contract Drawings and Shop Drawings.

1. Preparation: Mark Record Prints to show the actual installation where installation varies from that shown originally. Require individual or entity who obtained record data, whether individual or entity is Installer, subcontractor, or similar entity, to prepare the marked-up Record Prints.

   a. Give particular attention to information on concealed elements that would be difficult to identify or measure and record later.
   b. Accurately record information in an understandable drawing technique.
   c. Record data as soon as possible after obtaining it. Record and check the markup before enclosing concealed installations.

2. Content: Types of items requiring marking include, but are not limited to, the following:

   a. Dimensional changes to Drawings.
   b. Revisions to details shown on Drawings.
   c. Depths of foundations below first floor.
   d. Locations and depths of underground utilities.
   e. Revisions to routing of piping and conduits.
   f. Revisions to electrical circuitry.
   g. Actual equipment locations.
   h. Duct size and routing.
   i. Locations of concealed internal utilities.
   j. Changes made by Change Order or Construction Change Directive.
   k. Changes made following Architect's written orders.
   l. Details not on the original Contract Drawings.
   m. Field records for variable and concealed conditions.
   n. Record information on the Work that is shown only schematically.

3. Mark the Contract Drawings or Shop Drawings, whichever is most capable of showing actual physical conditions, completely and accurately. If Shop Drawings are marked, show cross-reference on the Contract Drawings.
4. Mark record sets with erasable, red-colored pencil. Use other colors to distinguish between changes for different categories of the Work at the same location.
5. Mark important additional information that was either shown schematically or omitted from original Drawings.
6. Note Construction Change Directive numbers, alternate numbers, Change Order numbers, and similar identification, where applicable.

B. Record Transparencies: Immediately before inspection for Certificate of Substantial Completion, review marked-up Record Prints with Architect. When authorized, prepare a full set of corrected transparencies of the Contract Drawings and Shop Drawings.

1. Incorporate changes and additional information previously marked on Record Prints. Erase, redraw, and add details and notations where applicable.
2. Refer instances of uncertainty to Architect for resolution.
3. Owner will furnish Contractor one set of transparencies of the Contract Drawings for use in recording information.
4. Print the Contract Drawings and Shop Drawings for use as Record Transparencies. Architect will make the Contract Drawings available to Contractor's print shop.

C. Format: Identify and date each Record Drawing; include the designation "PROJECT RECORD DRAWING" in a prominent location.

1. Record Prints: Organize Record Prints and newly prepared Record Drawings into manageable sets. Bind each set with durable paper cover sheets. Include identification on cover sheets.
2. Record Transparencies: Organize into unbound sets matching Record Prints. Place transparencies in durable tube-type drawing containers with end caps. Mark end cap of each container with identification. If container does not include a complete set, identify Drawings included.
3. Record CAD Drawings: Organize CAD information into separate electronic files that correspond to each sheet of the Contract Drawings. Name each file with the sheet identification. Include identification in each CAD file.
4. Identification: As follows:

   a. Project name.
   b. Date.
   c. Designation "PROJECT RECORD DRAWINGS."
   d. Name of Architect/Engineer.
   e. Name of Contractor.

1.5 RECORD SPECIFICATIONS

A. Preparation: Mark Specifications to indicate the actual product installation where installation varies from that indicated in Specifications, addenda, and contract modifications.

1. Give particular attention to information on concealed products and installations that cannot be readily identified and recorded later.
2. Mark copy with the proprietary name and model number of products, materials, and equipment furnished, including substitutions and product options selected.
3. Record the name of the manufacturer, supplier, Installer, and other information necessary to provide a record of selections made.
4. For each principal product, indicate whether Record Product Data has been submitted in operation and maintenance manuals instead of submitted as Record Product Data.
5. Note related Change Orders, Record Drawings, and Product Data where applicable.

NOT FOR BID

1.6 RECORD PRODUCT DATA

A. Preparation: Mark Product Data to indicate the actual product installation where installation varies substantially from that indicated in Product Data submittal.

1. Give particular attention to information on concealed products and installations that cannot be readily identified and recorded later.
2. Include significant changes in the product delivered to Project site and changes in manufacturer's written instructions for installation.
3. Note related Change Orders, Record Drawings, and Product Data where applicable.

1.7 MISCELLANEOUS RECORD SUBMITTALS

A. Assemble miscellaneous records required by other Specification Sections for miscellaneous record keeping and submittal in connection with actual performance of the Work. Bind or file miscellaneous records and identify each, ready for continued use and reference.

PART 2 - EXECUTION

2.1 RECORDING AND MAINTENANCE

A. Recording: Maintain one copy of each submittal during the construction period for Project Record Document purposes. Post changes and modifications to Project Record Documents as they occur; do not wait until the end of Project.

B. Maintenance of Record Documents and Samples: Store Record Documents and Samples in the field office apart from the Contract Documents used for construction. Do not use Project Record Documents for construction purposes. Maintain Record Documents in good order and in a clean, dry, legible condition, protected from deterioration and loss. Provide access to Project Record Documents for Architect's/Engineer's reference during normal working hours.

END OF SECTION 017839

NOT FOR BID

NOT FOR BID

SECTION 051200 - STRUCTURAL STEEL FRAMING

PART 1 - GENERAL

1.1 SUMMARY

A. Section Includes:

1. Structural steel.

1.2 DEFINITIONS

A. Structural Steel: Elements of the structural frame indicated on Drawings and as described in AISC 303, "Code of Standard Practice for Steel Buildings and Bridges."

1.3 PREINSTALLATION MEETINGS

A. Preinstallation Conference: Conduct conference at Project site.

1.4 ACTION SUBMITTALS

A. Product Data: For each type of product.

B. Shop Drawings: Show fabrication of structural-steel components.

1.5 INFORMATIONAL SUBMITTALS

A. Qualification Data: For fabricator.

B. Welding certificates.

C. Mill test reports for structural steel, including chemical and physical properties.

D. Source quality-control reports.

E. Field quality-control reports.

1.6 QUALITY ASSURANCE

A. Fabricator Qualifications: A qualified fabricator that participates in the AISC Quality Certification Program and is designated an AISC-Certified Plant, Category STD.

B. Installer Qualifications: A qualified installer who participates in the AISC Quality Certification Program and is designated an AISC-Certified Erector, Category CSE.

C. Welding Qualifications: Qualify procedures and personnel according to AWS D1.1/D1.1M, "Structural Welding Code - Steel."

D. Comply with applicable provisions of the following specifications and documents:

1. AISC 303.
2. AISC 360.
3. RCSC's "Specification for Structural Joints Using ASTM A 325 or A 490 Bolts."

NOT FOR BID

PART 2 - PRODUCTS

2.1 PERFORMANCE REQUIREMENTS

A. Construction: Moment frame; Braced frame.

2.2 STRUCTURAL-STEEL MATERIALS

A. W-Shapes: ASTM A242, Grade 50.

B. Channels, Angles, S-Shapes: ASTM A242, Grade 50.

C. Plate and Bar: ASTM A242, Grade 50.

D. Cold-Formed Hollow Structural Sections: ASTM A 847, structural tubing.

E. Steel Pipe: ASTM A 53/A 53M, Type E or Type S, Grade B.

F. Welding Electrodes: Comply with AWS requirements.

2.3 BOLTS, CONNECTORS, AND ANCHORS

A. High-Strength Bolts, Nuts, and Washers: ASTM A 325, Type 3, heavy-hex weathering steel structural bolts; and ASTM F 436, Type 1, hardened carbon-steel washers; all with plain finish.

1. Direct-Tension Indicators: ASTM F 959, Type 325, compressible-washer, weathering steel type.

B. Zinc-Coated High-Strength Bolts, Nuts, and Washers: ASTM A 307, Grade A, heavy-hex steel structural bolts; ASTM A 563A, Grade A-C carbon-steel nuts; and ASTM F 844, carbon-steel washers.

1. Finish: Hot-dip zinc coating Hot-dip or mechanically deposited zinc coating.

C. Tension-Control, High-Strength Bolt-Nut-Washer Assemblies: ASTM F 1852, Type 1, heavy-hex head assemblies consisting of steel structural bolts with splined ends, heavy-hex carbon-steel nuts, and hardened carbon-steel washers.

1. Finish: Plain.

D. Threaded Rods: ASTM A 36/A 36M.

1. Finish: Hot-dip zinc coating, ASTM A 153/A 153M, Class C.

NOT FOR BID

2.4 FABRICATION

A. Structural Steel: Fabricate and assemble in shop to greatest extent possible. Fabricate according to AISC 303, "Code of Standard Practice for Steel Buildings and Bridges," and to AISC 360.

2.5 SHOP CONNECTIONS

A. High-Strength Bolts: Shop install high-strength bolts according to RCSC's "Specification for Structural Joints Using ASTM A 325 or A 490 Bolts" for type of bolt and type of joint specified.

1. Joint Type: Snug tightened.

B. Weld Connections: Comply with AWS D1.1/D1.1M for tolerances, appearances, welding procedure specifications, weld quality, and methods used in correcting welding work.

2.6 SOURCE QUALITY CONTROL

A. Testing Agency: Engage a qualified testing agency to perform shop tests and inspections.

1. Provide testing agency with access to places where structural-steel work is being fabricated or produced to perform tests and inspections.

B. Bolted Connections: Inspect shop-bolted connections according to RCSC's "Specification for Structural Joints Using ASTM A 325 or A 490 Bolts."

C. Welded Connections: Visually inspect shop-welded connections according to AWS D1.1/D1.1M and the following inspection procedures, at testing agency's option:

1. Liquid Penetrant Inspection: ASTM E 165.
2. Magnetic Particle Inspection: ASTM E 709; performed on root pass and on finished weld. Cracks or zones of incomplete fusion or penetration are not accepted.
3. Ultrasonic Inspection: ASTM E 164.
4. Radiographic Inspection: ASTM E 94.

D. Prepare test and inspection reports.

PART 3 - EXECUTION

3.1 EXAMINATION

A. Verify, with certified steel erector present, elevations of concrete- and masonry-bearing surfaces and locations of anchor rods, bearing plates, and other embedments for compliance with requirements.

B. Proceed with installation only after unsatisfactory conditions have been corrected.

3.2 ERECTION

A. Set structural steel accurately in locations and to elevations indicated and according to AISC 303 and AISC 360.

B. Maintain erection tolerances of structural steel within AISC 303, "Code of Standard Practice for Steel Buildings and Bridges."

3.3 FIELD CONNECTIONS

A. High-Strength Bolts: Install high-strength bolts according to RCSC's "Specification for Structural Joints Using ASTM A 325 or A 490 Bolts" for type of bolt and type of joint specified.

1. Joint Type: Pretensioned.

B. Weld Connections: Comply with AWS D1.1/D1.1M for tolerances, appearances, welding procedure specifications, weld quality, and methods used in correcting welding work.

1. Comply with AISC 303 and AISC 360 for bearing, alignment, adequacy of temporary connections, and removal of paint on surfaces adjacent to field welds.
2. Remove backing bars or runoff tabs, back gouge, and grind steel smooth.
3. Assemble and weld built-up sections by methods that maintain true alignment of axes without exceeding tolerances in AISC 303, "Code of Standard Practice for Steel Buildings and Bridges," for mill material.

3.4 FIELD QUALITY CONTROL

A. Special Inspections: Engage a qualified special inspector to perform the following special inspections:

1. Verify structural-steel materials and inspect steel frame joint details.

NOT FOR BID

2. Verify weld materials and inspect welds.
3. Verify connection materials and inspect high-strength bolted connections.

B. Testing Agency: Engage a qualified testing agency to perform tests and inspections.

C. Bolted Connections: Inspect and test bolted connections according to RCSC's "Specification for Structural Joints Using ASTM A 325 or A 490 Bolts."

D. Welded Connections: Visually inspect field welds according to AWS D1.1/D1.1M.

1. In addition to visual inspection, test and inspect field welds according to AWS D1.1/D1.1M and the following inspection procedures, at testing agency's option:

   a. Liquid Penetrant Inspection: ASTM E 165.
   b. Magnetic Particle Inspection: ASTM E 709; performed on root pass and on finished weld. Cracks or zones of incomplete fusion or penetration are not accepted.
   c. Ultrasonic Inspection: ASTM E 164.
   d. Radiographic Inspection: ASTM E 94.

END OF SECTION 051200

NOT FOR BID

(THIS PAGE INTENTIONALLY LEFT BLANK)

NOT FOR BID

NOT FOR BID

SECTION 055213 - PIPE AND TUBE RAILINGS

PART 1 - GENERAL

1.1 SUMMARY

A. Section Includes:

1. Steel pipe and tube railings

1.2 ACTION SUBMITTALS

A. Product Data: For the following:

1. Manufacturer's product lines of mechanically connected railings.
2. Railing brackets.

B. Shop Drawings: Include plans, elevations, sections, details, and attachments to other work.

C. Samples: For each type of exposed finish required.

D. Delegated-Design Submittal: For railings, including analysis data signed and sealed by the qualified professional engineer responsible for their preparation.

1.3 INFORMATIONAL SUBMITTALS

A. Product Test Reports: For pipe and tube railings, for tests performed by a qualified testing agency, according to ASTM E 894 and ASTM E 935.

PART 2 - PRODUCTS

2.1 PERFORMANCE REQUIREMENTS

A. Delegated Design: Engage a qualified professional engineer, as defined in Section 014000 "Quality Requirements," to design railings, including attachment to building construction.

B. Structural Performance: Railings, including attachment to building construction, shall withstand the effects of gravity loads and the following loads and stresses within limits and under conditions indicated:

1. Handrails and Top Rails of Guards:

a. Uniform load of 50 lbf/ ft. applied in any direction.
b. Concentrated load of 200 lbf applied in any direction.
c. Uniform and concentrated loads need not be assumed to act concurrently.

2. Infill of Guards:

a. Concentrated load of 50 lbf applied horizontally on an area of 1 sq. ft..
b. Infill load and other loads need not be assumed to act concurrently.

NOT FOR BID

2.2 METALS, GENERAL

A. Brackets, Flanges, and Anchors: Cast or formed metal of same type of material and finish as supported rails unless otherwise indicated.

1. Provide type of bracket with predrilled hole for exposed bolt anchorage and that provides 1-1/2-inch clearance from inside face of handrail to finished wall surface.

2.3 STEEL AND IRON

A. Tubing: ASTM A 847 (cold formed) or ASTM A 588, atmospheric corrosion resistant.

B. Plate, Shapes, and Bars: ASTM A 242 or ASTM A 606.

2.4 FASTENERS

A. General: Provide the following:

1. Bolted Connections: ASTM A 563, Grade C3 or Grade D.

B. Post-Installed Anchors: Torque-controlled expansion anchors capable of sustaining, without failure, a load equal to 6 times the load imposed when installed in unit masonry and 4 times the load imposed when installed in concrete, as determined by testing according to ASTM E 488/E 488M, conducted by a qualified independent testing agency.

2.5 MISCELLANEOUS MATERIALS

A. Welding Rods and Bare Electrodes: Select according to AWS specifications for metal alloy welded.

B. Etching Cleaner for Galvanized Metal: Complying with MPI#25.

NOT FOR BID

2.6 FABRICATION

A. Cut, drill, and punch metals cleanly and accurately. Remove burrs and ease edges to a radius of approximately 1/32 inch unless otherwise indicated. Remove sharp or rough areas on exposed surfaces.

B. Form work true to line and level with accurate angles and surfaces.

C. Welded Connections: Cope components at connections to provide close fit, or use fittings designed for this purpose. Weld all around at connections, including at fittings.

1. Use materials and methods that minimize distortion and develop strength and corrosion resistance of base metals.
2. Obtain fusion without undercut or overlap.
3. Remove flux immediately.
4. At exposed connections, finish exposed surfaces smooth and blended so no roughness shows after finishing and welded surface matches contours of adjoining surfaces.

D. Welded Connections for Aluminum Pipe: Fabricate railings to interconnect members with concealed internal welds that eliminate surface grinding, using manufacturer's standard system of sleeve and socket fittings.

E. Nonwelded Connections: Connect members with concealed mechanical fasteners and fittings. Fabricate members and fittings to produce flush, smooth, rigid, hairline joints.

F. Form changes in direction by bending.

G. For changes in direction made by bending, use jigs to produce uniform curvature for each repetitive configuration required. Maintain cross section of member throughout entire bend without buckling, twisting, cracking, or otherwise deforming exposed surfaces of components.

H. Close exposed ends of railing members with prefabricated end fittings.

I. Provide wall returns at ends of wall-mounted handrails unless otherwise indicated.

J. Brackets, Flanges, Fittings, and Anchors: Provide wall brackets, flanges, miscellaneous fittings, and anchors to interconnect railing members to other work unless otherwise indicated.

1. At brackets and fittings fastened to plaster or gypsum board partitions, provide crush-resistant fillers or other means to transfer loads through wall finishes to structural supports and prevent bracket or fitting rotation and crushing of substrate.

PART 3 - EXECUTION

3.1 INSTALLATION, GENERAL

A. Set railings accurately in location, alignment, and elevation, measured from established lines and levels and free of rack.

1. Do not weld, cut, or abrade surfaces of railing components that are coated or finished after fabrication and that are intended for field connection by mechanical or other means without further cutting or fitting.
2. Set posts plumb within a tolerance of 1/16 inch in 3 feet.
3. Align rails so variations from level for horizontal members and variations from parallel with rake of steps and ramps for sloping members do not exceed 1/4 inch in 12 feet.

3.2 ATTACHING RAILINGS

A. Locate brackets as indicated, if not indicated, at spacing required to support structural loads.

B. Secure brackets and railings as shown on the contract plans or approved Shop Drawings.

END OF SECTION 055213

NOT FOR BID

NOT FOR BID

SECTION 061063 - EXTERIOR ROUGH CARPENTRY

PART 1 - GENERAL

1.1 SUMMARY

A. Section Includes:

1. Wood fences.
2. Wood structures.

B. Related Requirements:

1.2 ACTION SUBMITTALS

A. Product Data: For preservative-treated wood products.

1.3 INFORMATIONAL SUBMITTALS

A. Material Certificates:

1. For preservative-treated wood products. Indicate type of preservative used and net amount of preservative retained.

B. Evaluation Reports: For preservative-treated wood products, from ICC-ES.

PART 2 - PRODUCTS

2.1 LUMBER, GENERAL

A. Comply with DOC PS 20 and with grading rules of lumber grading agencies certified by ALSC's Board of Review as applicable. If no grading agency is indicated, comply with the applicable rules of any rules-writing agency certified by ALSC's Board of Review.

1. Factory mark each item with grade stamp of grading agency.
2. For items that are exposed to view in the completed Work, mark grade stamp on end or back of each piece.
3. Provide dressed lumber, S4S, unless otherwise indicated.

B. Maximum Moisture Content:

1. Boards: 19 percent.

2. Dimension Lumber: 19 percent.
3. Timber. 19 percent.

2.2 LUMBER

A. Dimension Lumber: No. 2 grade and the following species:

1. Douglas fir-larch, Douglas fir-larch (North), or Douglas fir-south; NLGA, WCLIB, or WWPA.
2. Mixed southern pine; SPIB.

B. Boards:

1. Mixed southern pine; No. 2 grade; SPIB.
2. Spruce-pine-fir (South) or spruce-pine-fir; No. 2 Common grade; NeLMA, NLGA, WCLIB, or WWPA.

NOT FOR BID

2.3 POSTS

A. Dimension Lumber Posts: No. 2 grade and any of the following species:

1. Mixed southern pine; SPIB.
2. Northern species; NLGA.
3. Eastern softwoods; NeLMA.
4. Southern pine; No. 2, SPIB.

2.4 PRESERVATIVE TREATMENT

A. Pressure treat boards and dimension lumber with waterborne preservative according to AWPA U1; Use Category UC3b for exterior construction not in contact with the ground, and Use Category UC4a for items in contact with the ground.

B. Pressure treat timber with waterborne preservative according to AWPA U1; Use Category UC4a.

C. Preservative Chemicals: Acceptable to authorities having jurisdiction.

1. Do not use chemicals containing arsenic or chromium except for timber posts and poles not exposed to direct human contact.

D. After treatment, redry dimension lumber to 19 percent maximum moisture content.

E. Mark treated wood with treatment quality mark of an inspection agency approved by ALSC's Board of Review.

1. For items indicated to receive a stained or natural finish, mark each piece on surface that will not be exposed.

F. Application: Treat all wood unless otherwise indicated.

NOT FOR BID

2.5 FASTENERS

A. General: Provide fasteners of size and type indicated, acceptable to authorities having jurisdiction, and that comply with requirements specified in this article for material and manufacture. Provide nails or screws, in sufficient length, to penetrate not less than 1-1/2 inches into wood substrate.

1. Use stainless steel unless otherwise indicated.

B. Postinstalled Anchors: Stainless-steel, chemical anchors with capability to sustain, without failure, a load equal to 6 times the load imposed when installed in unit masonry assemblies and equal to 4 times the load imposed when installed in concrete as determined by testing according to ASTM E 488, conducted by a qualified independent testing and inspecting agency.

1. Stainless-steel bolts and nuts complying with ASTM F 593 and ASTM F 594, Alloy Group 1 or 2.

2.6 METAL ACCESSORIES

A. Manufacturers: Subject to compliance with requirements, provide products by one of the following:

1. KC Metals Products, Inc.
2. Simpson Strong-Tie Co., Inc.
3. USP Structural Connectors.

B. Galvanized-Steel Sheet: Hot-dip, zinc-coated steel sheet complying with ASTM A 653/A 653M, G90 coating designation.

C. Stainless-Steel Sheet: ASTM A 666, Type 316.

PART 3 - EXECUTION

3.1 INSTALLATION, GENERAL

A. Set work to required levels and lines, with members plumb, true to line, cut, and fitted. Fit work to other construction; scribe and cope as needed for accurate fit.

B. Framing Standard: Comply with AF&PA WCD1 unless otherwise indicated.

C. Install metal framing anchors to comply with manufacturer's written instructions.

D. Do not splice structural members between supports unless otherwise indicated.

E. Securely attach exterior rough carpentry work to substrate by anchoring and fastening as indicated, complying with the following:

1. ICC-ES AC70 for power-driven fasteners.
2. "Fastening Schedule" in ICC's International Building Code.

END OF SECTION 061063

NOT FOR BID

SECTION 132450 - HELICAL SCREW FOUNDATIONS

GENERAL

1.1 SUMMARY

A. Section Includes: Helical Screw Foundations (HSF) for Structural Support.

1.2 REFERENCES

A. General: Standards listed by reference, including revisions by issuing authority, form a part of this specification section to the extent indicated. Standards listed are identified by issuing authority, authority abbreviation, designation number, title or other designation established by issuing authority. Standards subsequently referenced herein are referred to by issuing authority abbreviation and standard designation.

B. ASTM International:
1. ASTM A29/A29M Standard Specification for Steel Bars, Carbon and Alloy, Hot-Wrought and Cold-Finished, General Requirements for.
2. ASTM A36/A36M Standard Specification for Carbon Structural Steel.
3. ASTM A53 Standard Specification for Pipe, Steel, Black and Hot-Dipped, Zinc-Coated, Welded and Seamless.
4. ASTM A153 Standard Specification for Zinc Coating (Hot-Dip) on Iron and Steel Hardware.
5. ASTM A193/A193M Standard Specification for Alloy-Steel and Stainless Steel Bolting Materials for High-Temperature Service.
6. ASTM A252 Standard Specification for Welded and Seamless Steel Pipe Piles.
7. ASTM A320/A320M Standard Specification for Alloy/Steel Bolting Materials for Low-Temperature Service.
8. ASTM A500 Standard Specification for Cold-Formed Welded and Seamless Carbon Steel Structural Tubing in Rounds and Shapes.
9. ASTM A572 Standard Specification for High-Strength Low-Alloy Columbium-Vanadium Structural Steel.
10. ASTM A618 Standard Specification for Hot-Formed Welded and Seamless High-Strength Low-Alloy Structural Tubing.
11. ASTM A656 Standard Specification for Hot-Rolled Structural Steel, High-Strength Low-Alloy Plate with Improved Formability.
12. ASTM A775 Standard Specification for Epoxy-Coated Reinforcing Steel Bars.
13. ASTM A1018 Standard Specification for Steel, Sheet and Strip, Heavy Thickness Coils, Hot Rolled, Carbon, Structural, High-Strength Low-Alloy, Columbium or Vanadium, and High-Strength Low-Alloy with Improved Formability.
14. ASTM D1143 Standard Test Method for Piles Under Static Axial Compressive Load.
15. ASTM D3689 Standard Test Method for Individual Piles Under Static Axial Tensile Load.

C. Society of Automotive Engineers (SAE):

NOT FOR BID

1. SAE J429 Mechanical and Material Requirements for Externally Threaded Fasteners.

D. International Standardization Organization (ISO)
1. ISO 9001 Compliance

NOT FOR BID

1.3 DEFINITIONS

A. Special definitions that apply to this section include:
1. Power Installed Helical Screw Foundation: Consists of steel screw anchors with one or more helix-shaped steel plates attached to a central steel square solid shaft. Fabricated from high-strength square solid shafts to resist bending moments and installing-torque rating. Referred to hereinafter using the abbreviation "HSF."

1.4 SYSTEM DESCRIPTION

A. Design Requirements:
1. Design HSF to meet the specified loads and acceptance criteria as shown on the drawings.
2. Design power installed HSF application by Professional Structural Engineer experienced in design of this work and licensed in the State of Delaware. Design shall be in accordance with the manufacturer's requirements as noted:
   a. Allowable Working Load in Compression (KIPS).
   b. Allowable Working Load in Tension (KIPS): Not Applicable.
   c. Ultimate Structural Capacity in Compression (KIPS).
   d. Ultimate Structural Capacity in Tension (KIPS): Not Applicable.
   e. Lateral Load and Bending (KIPS.
   f. Critical Buckling Load (KIPS).

1.5 SUBMITTALS

A. General: Submit listed submittals in accordance with Conditions of the Contract and Division 1 Submittal Procedures Section.

B. Product Data: Submit manufacturer's product data and installation instructions.

C. Shop Drawings: Provide drawings indicating profiles and product components and accessories and indicate the following:
1. HSF number, location and pattern by assigned identification number.
2. HSF design load.
3. Type and size of central steel shaft.
4. Helix configuration (number and diameter of helix plates).
5. Minimum effective installation torque.
6. Minimum overall length.
7. Inclination of HSF.
8. Cutoff elevation.
9. HSF attachment to structure relative to grade beam, column pad, pile cap, etc.

D. Quality Assurance/Control Submittals: Submit the following:
   1. Design Data: Engineer's design data and calculations.
   2. Test Reports: Certified material test reports showing compliance with specified characteristics and physical properties.
   3. Certificates: Submit the following:
      a. Manufacturer's certificate that products meet or exceed specified requirements.
      b. Manufacturer's Certificate of Registration for ISO 9001 compliance.
      c. Mill test reports as requested.

E. In Place Testing:
   1. Test Reports: Certified test reports showing compliance with ultimate and allowable loading requirements in accordance with ASTM D 1143. Test reports shall be sealed by an Engineer licensed in the state of Delaware.

F. Closeout Submittals: Submit the following:
   1. Installer's Field Reports: Accurately record the following: Type, size and actual locations of HSF, torque installation records on all HSF and torque monitoring calibration data.

NOT FOR BID

1.6 QUALITY ASSURANCE

A. Installer Qualifications: Utilize an installer having demonstrated experience on projects of similar size and complexity, and who is authorized and trained by the manufacturer to install its products.

B. Manufacturer Qualifications: Utilize products from a manufacturer maintaining a quality system in compliance with ISO 9001 Requirements.

C. Certifications: Certified mill test reports for the central steel shaft, as the material is delivered, for record purposes. Provide ultimate strength, yield strength, percent elongation and chemistry composition.

D. Preinstallation Meetings: A meeting shall be held on site with the installer to discuss installation procedures with the owner at least one week before installation of the anchors.

1.7 DELIVERY, STORAGE & HANDLING

A. General: Comply with Division 1 Product Requirement Section.

B. Comply with manufacturer's ordering instructions and lead time requirements to avoid construction delays.

C. Delivery: Deliver materials in manufacturer's original, unopened, undamaged containers with identification labels intact.

D. Storage and Protection: Store materials protected from exposure to harmful environmental conditions and at temperature and humidity conditions recommended by the manufacturer.

PRODUCTS

1.8 HELICAL SCREW FOUNDATIONS

A. Possible Manufacturers:

1. AB Chance Company, 210 N. Allen St., Centralia, MO 65240; Telephone: (573) 682-8414; Fax: (573) 682-8660; E-mail: hpscontact@hps.hubbell.com; Website: www.abchance.com.
2. Magnum Piering, Inc., 6082 Schumacher Park Drive, West Chester, OH 45069; Telephone: (513) 777-1630; Fax: (513) 777-5374; Website: www.magnumpiering.com.
3. Piertech, 17813 Edison Ave., Suite 100, Chesterfield, MO 63005; Telephone: 636) 536-5007: Website: www.piertech.com

1.9 MATERIALS

A. Central Steel Shaft:
1. Consists of lead sections, helical extensions and plain extensions.
2. Lead sections shall consist of Hot rolled Round-Cornered-Square (RCS) solid steel bars meeting dimensional and workmanship requirements of ASTM A29. The shaft size shall be specified to provide adequate compressive and/or tensile strength for the required loading. One end of the Lead Section shall have a 45-degree bevel to aid in starting the anchor. The other end shall have one or more holes, depending upon the shaft size, to receive attachment bolt(s).
3. Extensions, helical or plain, shall be Hot rolled Round-Cornered-Square (RCS) solid steel bars meeting dimensional and workmanship requirements of ASTM A29. The shaft may be specified in sizes 1 ½ to 2 inches square. Each end of the Extension section shall have bolt holes set at 90 degrees to each other, for no less than two (2) bolts to attachment to the Lead Section, other Extension Sections, or bolted termination device.

B. Helix Bearing Plate:
1. Hot rolled carbon steel sheet, strip or plate formed on matching metal dies to true helical shape and uniform pitch. Bearing plate material shall conform to ASTM A572, ASTM A1018, or ASTM A656. Bearing Plates shall have a specified thickness of either 3/8 or 1/2 inch and a 3 inch pitch. Bearing Plates diameters may be specified in any combination of equal or increasing diameters from 6 inches to 16 inches, in 2-inch increments.

C. Bolts:
1. The size and type of bolts used to connect the central steel shaft sections together shall conform to the following ASTM specifications.
2. 3/4 inch diameter bolt per ASTM A320 Grade L7.
7/8 inch diameter bolt per ASTM A193 Grade B7.
1 1/8 inch diameter bolt per ASTM A193 Grade B7.
1 1/4 inch diameter bolt per ASTM A193 Grade B7.

NOT FOR BID

3/4 inch diameter bolts per SAE J429 Grade 5.

D. Couplings:
1. Formed as integral part of the plain and helical extension material.

E. Plates, Shapes or Pier Caps: For structural steel plates and shapes for HSF top attachments, conform to ASTM A36 or ASTM A572, Grade 50.

F. Corrosion Protection:
1. Galvanization: All material shall be hot dipped galvanized in accordance with ASTM A153 after fabrication. If the final extension must be cut to the desired final elevation, any exposed steel shall be coated with a field-applied cold galvanizing compound as recommended by the engineer.

G. Weldments:
1. All welded connections shall conform to the requirements of the American Welding Society, "Structural Welding Code, AWS D1.1" and applicable revisions.

NOT FOR BID

EXECUTION

1.10 MANUFACTURER'S INSTRUCTIONS

A. Comply with the instructions and recommendations of the power installed HSF manufacturer.

1.11 EXAMINATION

A. Site Verification of Conditions:
1. Verify that site conditions are acceptable for installation of power installed helical screw foundations.

a. Verify that all work of other trades is completed to the point where HSFs may commence without restriction.

b. Verify that all HSFs may be installed in accordance with all pertinent codes and regulations regarding such items as underground obstructions, right-of-way limitations, utilities, etc.

2. Do not proceed with installation of power installed helical screw foundations until unacceptable conditions are corrected.

1.12 INSTALLATION

A. General:

1. The HSF installation technique shall be consistent with the geotechnical, logistical, environmental and load carrying conditions of the project.

2. Installation equipment shall be rotary type, hydraulic power driven torque motor with clockwise and counterclockwise rotation capabilities.

   a. Utilize a torque motor capable of continuous adjustment to number of revolutions per minute (RPM) during installation and with a torque capacity 15% greater than the torsional strength rating of the central steel shaft to be installed. Do not use percussion drilling equipment.

   b. Utilize equipment capable of applying adequate downward pressure and torque simultaneously to suit project soil conditions and load requirements, and capable of continuous position adjustment to maintain proper HSF alignment.

3. A calibrated torque indicator shall be used during HSF installation. The torque indicator may be an integral part of the installation equipment or externally mounted in-line with the installation tooling.

B. Central Steel Shaft Installation Procedure:

1. Engage and advance HSF into soil in a smooth, continuous manner at a rate of rotation of 5 - 20 RPM. Provide extension sections to obtain the required minimum overall length and installation torque as shown on the working drawings. Connect sections together using coupling bolt and nut tightened to torque of 40 ft-lb (54 N × m).

2. Apply sufficient down pressure to uniformly advance the HSF sections approximately 3 inches (76 mm) per revolution. Adjust rate of rotation and magnitude of down pressure for different soil conditions and depths.

C. Termination Criteria:

1. Satisfy the minimum installation torque and minimum overall length criteria as shown on the working drawings prior to terminating the HSF.

2. The torque as measured during the installation shall not exceed the torsional strength rating of the central steel shaft.

3. If the torsional strength rating of the central steel shaft and/or installation equipment has been reached prior to achieving the minimum overall length required, the installer shall have the following options:

   a. Terminate the installation at the depth obtained subject to the review and acceptance of the Owner, or:

   b. Remove the existing HSF and install a new one with fewer and/or smaller diameter helix plates. The new helix configuration shall be subject to

NOT FOR BID

review and acceptance of the Owner. If reinstalling in the same location, the topmost helix of the new HSF shall be terminated at least 3 feet (1 m) beyond the terminating depth of the original HSF.

4. If the minimum installation torque as shown on the working drawings is not achieved at the minimum overall length, and there is no maximum length constraint, the Contractor shall have the following options:

   a. Install the HSF deeper using additional extension sections.

   b. Remove the existing HSF and install a new one with additional and/or larger diameter helix plates. The new helix configuration shall be subject to review and acceptance of the Owner. If reinstalling in the same location, the topmost helix of the new HSF shall be terminated at least 3 feet (1 m) beyond the terminating depth of the original HSF.

   c. Derate the load capacity of the HSF and install additional pile(s). The derated capacity and additional pile location shall be subject to the review and acceptance by the Owner.

5. If the HSF is refused or deflected by a subsurface obstruction, terminate the installation and remove the pile. Remove the obstruction, if feasible, and reinstall the HSF. If it is not feasible to remove the obstruction, install the HSF at an adjacent location, subject to review and acceptance by the Owner.

6. If the torsional strength rating of the central steel shaft and/or installation equipment has been reached prior to proper positioning of the last plain extension section relative to the final elevation, the Contractor may remove the last plain extension and replace it with a shorter length extension. If it is not feasible to remove the last plain extension, the Contractor may cut the extension shaft to the correct elevation. Do not reverse (back-out) the helical screw foundation to facilitate extension removal.

7. The average torque for the last 3 feet (1 m) of penetration shall be used as the basis of comparison with the minimum installation torque as shown on the working drawings. The average torque shall be defined as the average of the last 3 readings recorded at 1 foot (0.3 m) intervals.

D. Site Tolerances: Install HSF to the following allowable variation:

1. Centerline of piling shall not be more than 3 inches (76 mm) from indicated plan location.

2. Pile plumbness shall be within 2 degrees of design alignment.

3. Top elevation of pile shall be within +1 inch (25 mm) to -2 inches (50 mm) of the design vertical elevation.

NOT FOR BID

1.13 FIELD QUALITY CONTROL

A. Site Tests:

1. Load Test Procedures: The test shall be conducted in conformance with the requirements of ASTM D1143-07 "Standard Test Method for Piles under Static Axial Compressive Load" unless the Engineer of Record on the project modifies these requirements.

a. Determine the depth to the target stratum of soil from the geotechnical site investigation report that includes boring logs. Use this data to select a pile design capacity, ultimate capacity and estimate the installation torque at the target stratum and depth.

b. Set the spacing and install the four reaction piles at the test site. The recommended spacing between the test pile and the reaction piles is 5D where D = diameter of the largest helical plate.

c. Install a test helical product pile at the centroid of the reaction piles to the target depth and torque resistance.

d. Mount the two anchor beams on the four reaction piles and the reaction beam between the anchor beams.

e. Install a load cell, hydraulic load jack, actuator and pressure gauge. The center hole load jack will be mounted below the reaction beam for a bearing (compression) test.

f. Set the deflection measuring devices. Deflection measuring devices can include dial gauges (accuracy to .001") mounted on a reference beam, a transit level surveying system, or other types of devices as may be specified by the Engineer.

g. Apply a small seating/alignment load, usually 5% of the ultimate load. Hold the seating load constant for 10 minutes or until no further displacement is measured.

h. Set the deflection measuring device(s) to zero.

i. Apply the first load increment as 20% of the ultimate load and hold that load constant. Monitor the incremental deflection (Δd) at intervals of 30 sec., 1, 5, 10, and 20 minutes (per the "quick" test procedure of ASTM). The monitoring can be stopped after 10 or 20 minutes as long as the rate of deflection is less than 0.002" per minute. If Δd (at 20 minutes) < 0.330", proceed to the next 20% load increment and repeat Step 9 until the ultimate load is reached or failure occurs by excessive deflection (vertical deformation).

NOT FOR BID

j. Once the maximum loading condition is reached, unloading commences with at least two unloading increments: 50% of maximum load and 0% of maximum load.

k. A failure criterion is often established by the Project Engineer and will reflect project specific conditions. A plot of load versus pile deflection (d) is made to determine the ultimate and working load capacity of the pile system. A frequently used failure criteria is d < 1.0" to define the ultimate acceptable load and a permanent deflection (after unloading) < 0.5".

2. Acceptance Criteria: It is recommended that any field load test for bearing or tension be conducted under the supervision of a Registered Professional Engineer. The Engineer will specify the test and measurement procedure, load increments, time intervals, and acceptable ultimate deflection consistent with specific project and load conditions. If the design ultimate load and test ultimate load results are close, the Engineer may choose to adjust the pile spacing, to increase the depth of installation and/or modify the helical plate configuration in order to achieve a minimum Factor of Safety of 2.0 for bearing piles.

B. Site Test Records: Provide the Owner copies of field test reports within 24 hours after completion of the load tests. Include, at a minimum, the following information:

1. Name of project and Contractor.

2. Name of Contractor's supervisor during installation.

3. Name of third party test agency, if required.

4. Date, time and duration of test.

5. Location of HSF by assigned identification number.

6. Type of test (i.e., tension or compression).

7. Description of calibrated testing equipment and test setup.

8. Actual HSF type and configuration - including lead section, number and type of extension sections (manufacturer's SKU numbers).

9. Steps and duration of each load increment.

10. Cumulative pile-head movement at each load step.

11. Comments pertaining to test procedure, equipment adjustments or other relevant information.

12. Signed by third party test agency representative, registered professional engineer or as required by local jurisdiction.

NOT FOR BID

C. Installation Records: Provide the Owner copies of HSF installation records within 24 hours after each installation is completed. Include, at a minimum, the following information.

1. Name of project and Contractor.
2. Name of Contractor's supervisor during installation.
3. Date and time of installation.
4. Name and model of installation equipment.
5. Type of torque indicator used.
6. Location of HSF by assigned identification number.
7. Actual HSF type and configuration - including lead section (number and size of helix plates), number and type of extension sections (manufacturer's SKU numbers).
8. HSF installation duration and observations.
9. Total length of installed HSF.
10. Cutoff elevation.
11. Inclination of HSF.
12. Installation torque at 1-foot (0.3 m) intervals for the final 10 feet (3.1 m).
13. Comments pertaining to interruptions, obstructions or other relevant information.
14. Rated load capacities.

NOT FOR BID

1.14 PROTECTION

A. Protect installed work from damage due to subsequent construction activity on the site.

END OF SECTION 02450

Designation: D 1143/D 1143M – 07

Standard Test Methods for Deep Foundations Under Static Axial Compressive Load[1]

This standard is issued under the fixed designation D 1143/D 1143M; the number immediately following the designation indicates the year of original adoption or, in the case of revision, the year of last revision. A number in parentheses indicates the year of last reapproval. A superscript epsilon (ϵ) indicates an editorial change since the last revision or reapproval.

This standard has been approved for use by agencies of the Department of Defense.

NOT FOR BID

1. Scope*

1.1 The test methods described in this standard measure the axial deflection of a vertical or inclined deep foundation when loaded in static axial compression. These methods apply to all deep foundations, referred to herein as *piles,* that function in a manner similar to driven piles or castinplace piles, regardless of their method of installation, and may be used for testing single piles or pile groups. The test results may not represent the long-term performance of a deep foundation.

1.2 This standard provides minimum requirements for testing deep foundations under static axial compressive load. Plans, specifications, and/or provisions prepared by a qualified engineer may provide additional requirements and procedures as needed to satisfy the objectives of a particular test program. The engineer in responsible charge of the foundation design, referred to herein as the Engineer, shall approve any deviations, deletions, or additions to the requirements of this standard.

1.3 This standard allows the following test procedures:

Procedure A	Quick Test
Procedure B	Maintained Test (optional)
Procedure C	Loading in Excess of Maintained Test (optional)
Procedure D	Constant Time Interval Test (optional)
Procedure E	Constant Rate of Penetration Test (optional)
Procedure F	Constant Movement Increment Test (optional)
Procedure G	Cyclic Loading Test (optional)

1.4 Apparatus and procedures herein designated "optional" may produce different test results and may be used only when approved by the Engineer. The word "shall" indicates a mandatory provision, and the word "should" indicates a recommended or advisory provision. Imperative sentences indicate mandatory provisions.

1.5 A qualified geotechnical engineer should interpret the test results obtained from the procedures of this standard so as to predict the actual performance and adequacy of piles used in the constructed foundation. See Appendix X1 for comments regarding some of the factors influencing the interpretation of test results.

1.6 A qualified engineer shall design and approve all loading apparatus, loaded members, support frames, and test procedures. The text of this standard references notes and footnotes which provide explanatory material. These notes and footnotes (excluding those in tables and figures) shall not be considered as requirements of the standard. This standard also includes illustrations and appendices intended only for explanatory or advisory use.

1.7 The values stated in either SI units or inch-pound units are to be regarded separately as standard. The values stated in each system may not be exact equivalents; therefore, each system shall be used independently of the other. Combining values from the two systems may result in non-conformance with the standard.

1.8 The gravitational system of inch-pound units is used when dealing with inch-pound units. In this system, the pound (lbf) represents a unit of force (weight), while the unit for mass is slugs. The rationalized slug unit is not given, unless dynamic (F=ma) calculations are involved.

1.9 All observed and calculated values shall conform to the guidelines for significant digits and rounding established in Practice D 6026.

1.10 The method used to specify how data are collected, calculated, or recorded in this standard is not directly related to the accuracy to which the data can be applied in design or other uses, or both. How one applies the results obtained using this standard is beyond its scope.

1.11 *This standard does not purport to address all of the safety concerns, if any, associated with its use. It is the responsibility of the user of this standard to establish appropriate safety and health practices and determine the applicability of regulatory limitations prior to use.*

2. Referenced Documents

2.1 *ASTM Standards:* [2]

D 653 Terminology Relating to Soil, Rock, and Contained Fluids

D 3740 Practice for Minimum Requirements for Agencies

[1] This test method is under the jurisdiction of ASTM Committee D18 on Soil and Rock and is the direct responsibility of Subcommittee D18.11 on Deep Foundations.

Current edition approved Feb. 1, 2007. Published April 2007. Originally approved in 1950. Discontinued in August 1995 and reinstated in 2007 as D 1143–07. Last previous edition approved in 1994 as D 1143 – 81(1994) ϵ1 .

[2] For referenced ASTM standards, visit the ASTM website, www.astm.org, or contact ASTM Customer Service at service@astm.org. For *Annual Book of ASTM Standards* volume information, refer to the standard's Document Summary page on the ASTM website.

***A Summary of Changes section appears at the end of this standard.**

Copyright © ASTM International, 100 Barr Harbor Drive, PO Box C700, West Conshohocken, PA 19428-2959, United States.

Engaged in the Testing and/or Inspection of Soil and Rock as Used in Engineering Design and Construction

D 5882 Test Method for Low Strain Integrity Testing of Piles

D 6026 Practice for Using Significant Digits in Geotechnical Data

D 6760 Test Method for Integrity Testing of Concrete Deep Foundations by Ultrasonic Crosshole Testing

2.2 *American National Standards:*[3]

ASME B30.1 Jacks

ASME B40.100 Pressure Gages and Gauge Attachments

ASME B89.1.10.M Dial Indicators (For Linear Measurements)

3. Terminology

3.1 For common definitions of terms used in this standard see Terminology D 653 Terminology Relating to Soil, Rock, and Contained Fluids.

3.2 *Definitions of Terms Specific to this Standard:*

3.2.1 *cast in-place pile*, *n*—a deep foundation unit made of cement grout or concrete and constructed in its final location, for example, drilled shafts, bored piles, caissons, auger cast piles, pressure-injected footings, etc

3.2.2 *deep foundation*, *n*— a relatively slender structural element that transmits some or all of the load it supports to soil or rock well below the ground surface, such as a steel pipe pile or concrete drilled shaft

3.2.3 *driven pile*, *n*—a deep foundation unit made of preformed material with a predetermined shape and size and typically installed by impact hammering, vibrating, or pushing.

3.2.4 *failure load*, *n*—for the purpose of terminating an axial compressive load test, the test load at which rapid continuing, progressive movement occurs, or at which the total axial movement exceeds 15 % of the pile diameter or width, or as specified by the engineer.

3.2.5 *telltale rod*, *n*—an unstrained metal rod extended through the test pile from a specific point to be used as a reference from which to measure the change in the length of the loaded pile.

3.2.6 *wireline*, *n*—a steel wire mounted with a constant tension force between two supports and used as a reference line to read a scale indicating movement of the test pile.

4. Significance and Use

4.1 Field tests provide the most reliable relationship between the axial load applied to a deep foundation and the resulting axial movement. Test results may also provide information used to assess the distribution of side shear resistance along the pile shaft, the amount of end bearing developed at the pile toe, and the long-term load-deflection behavior. A foundation designer may evaluate the test results to determine if, after applying an appropriate factor of safety, the pile or pile group has an ultimate static capacity and a deflection at service load satisfactory to support a specific foundation. When performed as part of a multiple-pile test program, the designer may also use the results to assess the viability of different piling types and the variability of the test site.

4.2 If feasible, without exceeding the safe structural load on the pile(s) or pile cap, the maximum load applied should reach a failure load from which the Engineer may determine the ultimate axial static compressive load capacity of the pile(s). Tests that achieve a failure load may help the designer improve the efficiency of the foundation by reducing the piling length, quantity, or size.

4.3 If deemed impractical to apply axial test loads to an inclined pile, the Engineer may elect to use axial test results from a nearby vertical pile to evaluate the axial capacity of the inclined pile.

NOTE 1—The quality of the result produced by this test method is dependent on the competence of the personnel performing it, and the suitability of the equipment and facilities used. Agencies that meet the criteria of Practice D 3740 are generally considered capable of competent and objective testing/sampling/ inspection/etc. Users of this test method are cautioned that compliance with Practice D 3740 does not in itself assure reliable results. Reliable results depend on many factors; Practice D 3740 provides a means of evaluating some of those factors.

5. Test Foundation Preparation

5.1 Excavate or add fill to the ground surface around the test pile or pile group to the final design elevation unless otherwise approved by the Engineer.

5.2 Cut off or build up the test pile as necessary to permit construction of the load-application apparatus, placement of the necessary testing and instrumentation equipment, and observation of the instrumentation. Remove any damaged or unsound material from the pile top and prepare the surface so that it is perpendicular to the pile axis with minimal irregularity to provide a good bearing surface for a test plate.

5.3 For tests of single piles, install a solid steel test plate at least 25 mm (1 in) thick perpendicular to the long axis of the test pile that covers the complete pile top area. The test plate shall span across and between any unbraced flanges on the test pile.

5.4 For tests on pile groups, cap the pile group with steel-reinforced concrete or a steel load frame designed for the anticipated loads. Provide a clear space beneath the pile cap as specified by the Engineer to eliminate any bearing on the underlying ground surface. For each loading point on the pile cap, provide a solid steel test plate oriented perpendicular to the axis of the pile group with a minimum thickness of 25 mm (1 in), as needed to safely apply load to the pile cap. Center a single bearing plate on the centroid of the pile group. Locate multiple bearing plates symmetrically about the centroid of the pile group. Boxes and beams may bear directly on the pile cap when designed to bear uniformly along their contact surface with the cap.

5.5 To minimize stress concentrations due to minor irregularities of the pile top surface, set test plates bearing on the top of precast or cast-in-place concrete piles in a thin layer of quick-setting, non-shrink grout, less than 6 m (0.25 in) thick and having a compressive strength greater than the test pile at the time of the test. Set test plates, boxes, and beams designed

[3] Available from American Society of Mechanical Engineers (ASME), ASME International Headquarters, Three Park Ave., New York, NY 10016-5990, http://www.asme.org.

NOT FOR BID

to bear on a concrete pile cap in a thin layer of quick-setting, non-shrink grout, less than 6 mm (0.25 in) thick and having a compressive strength greater than the pile cap at the time of the test. For tests on steel piles, or a steel load frame, weld the test plate to the pile or load frame. For tests on individual timber piles, set the test plate directly on the cleanly cut top of the pile, or in grout as described for concrete piles.

NOTE 2—Deep foundations sometimes include hidden defects that may go unnoticed prior to the static testing. Low strain integrity tests as described in D 5882 and ultrasonic crosshole integrity tests as described in D 6760 may provide a useful pre-test evaluation of the test foundation.

6. Apparatus for Applying and Measuring Loads

6.1 *General*:

6.1.1 The apparatus for applying compressive loads to a test pile or pile group shall conform to one of the methods described in 6.3–6.6 Unless otherwise specified by the Engineer, the apparatus for applying and measuring loads described in this section shall be capable of safely applying at least 120 % of the maximum anticipated test load. Use the method described in 6.3 to apply axial loads to either vertical or inclined piles or pile groups. Use the methods described in 6.4-6.6 to apply only vertical loads.

6.1.2 Align the test load apparatus with the longitudinal axis of the pile or pile group to minimize eccentric loading. When necessary to prevent lateral deflection and buckling along the unsupported pile length, provide lateral braces that do not influence the axial movement of the pile, or pile cap.

6.1.3 Each jack shall include a hemispherical bearing or similar device to minimize lateral loading of the pile or group. The hemispherical bearing should include a locking mechanism for safe handling and setup. Center bearing plates, hydraulic jack(s), load cell(s), and hemispherical bearings on the test beam(s), test pile, or test pile cap.

6.1.4 Provide bearing stiffeners as needed between the flanges of test and reaction beams. Provide steel bearing plates as needed to spread the load from the outer perimeter of the jack(s), or the bearing surface of beams or boxes, to bear on the surface of the test pile or pile cap. Also provide steel bearing plates to spread the load between the jack(s), load cells, and hemispherical bearings, and to spread the load to the test beam(s), test pile, or pile cap. Bearing plates shall extend the full flange width of steel beams and the complete top area of piles, or as specified by the Engineer, so as to provide full bearing and distribution of the load.

6.1.5 Unless otherwise specified, provide steel bearing plates that have a total thickness adequate to spread the bearing load between the outer perimeters of loaded surfaces at a maximum angle of 45 ° to the loaded axis. For center hole jacks and center hole load cells, also provide steel plates adequate to spread the load from their inner diameter to the their central axis at a maximum angle of 45 ° , or per manufacturer recommendations. Bearing plates shall extend the full width of the test beam(s) or any steel reaction members so as to provide full bearing and distribution of the load.

6.1.6 A qualified engineer shall design and approve all loading apparatus, loaded members, support frames, and loading procedures. The test beam(s), load platforms, and support structures shall have sufficient size, strength, and stiffness to prevent excessive deflection and instability up to the maximum anticipated test load.

NOTE 3—Rotations and lateral displacements of the test pile or pile cap may occur during loading, especially for piles extending above the soil surface or through weak soils. Design and construct the support reactions to resist any undesirable rotations or lateral displacements

6.2 *Hydraulic Jacks, Gages, Transducers, and Load Cells*:

6.2.1 The hydraulic jack(s) and their operation shall conform to ASME B30.1 Jacks and shall have a nominal load capacity exceeding the maximum anticipated jack load by at least 20 %. The jack, pump, and any hoses, pipes, fittings, gages, or transducers used to pressurize it shall be rated to a safe pressure corresponding to the nominal jack capacity.

6.2.2 The hydraulic jack ram(s) shall have a travel greater than the sum of the anticipated maximum axial movement of the pile plus the deflection of the test beam and the elongation and movement of any anchoring system, but not less than 15 % of the average pile diameter or width. Use a single highcapacity jack when possible. When using a multiple jack system, provide jacks of the same make, model, and capacity, and supply the jack pressure through a common manifold. Fit the manifold and each jack with a pressure gage to detect malfunctions and imbalances.

6.2.3 Unless otherwise specified, the hydraulic jack(s), pressure gage(s), and pressure transducer(s) shall have a calibration to at least the maximum anticipated jack load performed within the six months prior to each test or series of tests. Furnish the calibration report(s) prior to performing a test, which shall include the ambient temperature and calibrations performed for multiple ram strokes up to the maximum stroke of the jack.

6.2.4 Each complete jacking and pressure measurement system, including the hydraulic pump, should be calibrated as a unit when practicable. The hydraulic jack(s) shall be calibrated over the complete range of ram travel for increasing and decreasing applied loads. If two or more jacks are to be used to apply the test load, they shall be of the same make, model, and size, connected to a common manifold and pressure gage, and operated by a single hydraulic pump. The calibrated jacking system(s) shall have accuracy less than 5% of the maximum applied load. When not feasible to calibrate a jacking system as a unit, calibrate the jack, pressure gages, and pressure transducers separately, and each of these components shall have accuracy less than 2% of the applied load.

6.2.5 Pressure gages shall have minimum graduations less than or equal to 1% of the maximum applied load and shall conform to ASME B40.100 Pressure Gages and Gauge Attachments with an accuracy grade 1A having a permissible error ± 1% of the span. Pressure transducers shall have a minimum resolution less than or equal to 1% of the maximum applied load and shall conform to ASME B40.100 with an accuracy grade 1A having a permissible error ± 1% of the span. When used for control of the test, pressure transducers shall include a real-time display.

6.2.6 If the maximum test load will exceed 900 kN (100 tons), place a properly constructed load cell or equivalent device in series with each hydraulic jack. Unless otherwise specified the load cell(s) shall have a calibration to at least the

NOT FOR BID

maximum anticipated jack load performed within the six months prior to each test or series of tests. The calibrated load cell(s) or equivalent device(s) shall have accuracy within 1 % of the applied load, including an eccentric loading of up to 1% applied at an eccentric distance of 1 in. (25 mm). After calibration, load cells shall not be subjected to impact loads. A load cell is recommended, but not required, for lesser load. If not practicable to use a load cell, include embedded strain gages located in close proximity to the jack to confirm the applied load.

6.2.7 Do not leave the hydraulic jack pump unattended at any time during the test. Automated jacking systems shall include a clearly marked mechanical override to safely reduce hydraulic pressure in an emergency.

6.3 *Load Applied by Hydraulic Jack(s) Acting Against Anchored Reaction Frame* (See Fig. 1 and Fig. 2):

6.3.1 Apply the test load to the pile or pile group with the hydraulic jack(s) reacting against the test beam(s) centered over the test pile, or pile group. Install a sufficient number of anchor piles or suitable anchoring device(s) to provide adequate reactive capacity for the test beam(s). Provide a clear distance from the test pile or pile group of at least five times the maximum diameter of the largest anchor or test pile(s), but not less than 2.5 m (8 ft). The Engineer may increase or decrease this minimum clear distance based on factors such as the type and depth of reaction, soil conditions, and magnitude of loads so that reaction forces do not significantly effect the test results.

NOTE 4—Excessive vibrations during anchor pile installation in non-cohesive soils may affect test results. Anchor piles that penetrate deeper than the test pile may affect test results. Install the anchor piles nearest the test pile first to help reduce installation effects.

6.3.2 Provide sufficient clearance between the bottom flange(s) of the test beam(s) and the top of the test pile or pile group to place the necessary bearing plates, hydraulic jack(s), hemispherical bearing, and load cell(s). For test loads of high magnitude requiring several anchors, a steel framework may be required to transfer the applied loads from the test beam(s) to the anchors.

6.3.3 When testing individual inclined piles, align the jack(s), test beam(s), and anchor piles with the inclined longitudinal axis of the test pile.

6.3.4 Attach the test beam(s) (or reaction framework if used) to the anchoring devices with connections designed to adequately transfer the applied loads to the anchors so as to prevent slippage, rupture or excessive elongation of the connections under maximum required test load.

6.4 *Load Applied by Hydraulic Jack(s) Acting Against a Weighted Box or Platform* :

(Fig. 3):

6.4.1 Apply the test load to the pile or pile group with the hydraulic jack(s) reacting against the test beam(s) centered over the test pile, or pile group. Center a box or platform on the test beam(s) with the edges of the box or platform parallel to the test beam(s) supported by cribbing or piles placed as far from the test pile or pile group as practicable, but in no case less than a clear distance of 1.5 m (5 ft). If cribbing is used, the bearing area of the cribbing at ground surface shall be sufficient to prevent adverse settlement of the weighted box or platform.

6.4.2 The test beam(s) shall have sufficient size and strength to prevent excessive deflection under the maximum load, and sufficient clearance between the bottom flange(s) of the test beam(s) and the top of the test pile or pile group to place the necessary bearing plates, hydraulic jack(s), hemispherical bearing, and load cell(s). Support the ends of the test beam(s) on temporary cribbing or other devices.

NOT FOR BID

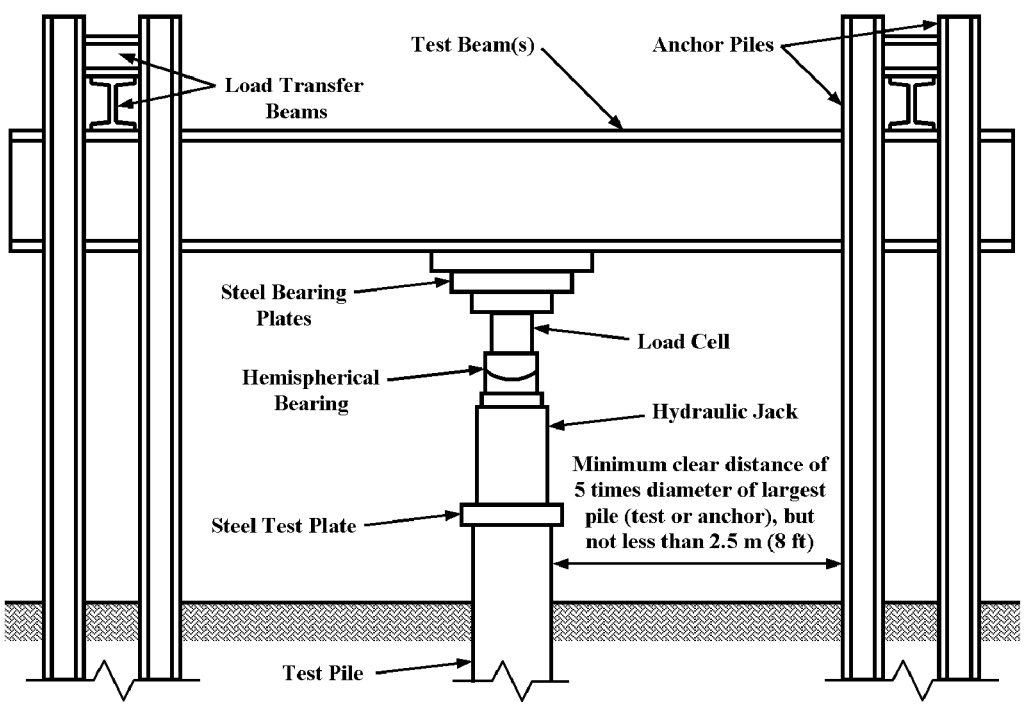

FIG. 1 Schematic of Hydraulic Jack Acting Against Anchored Reaction Frame

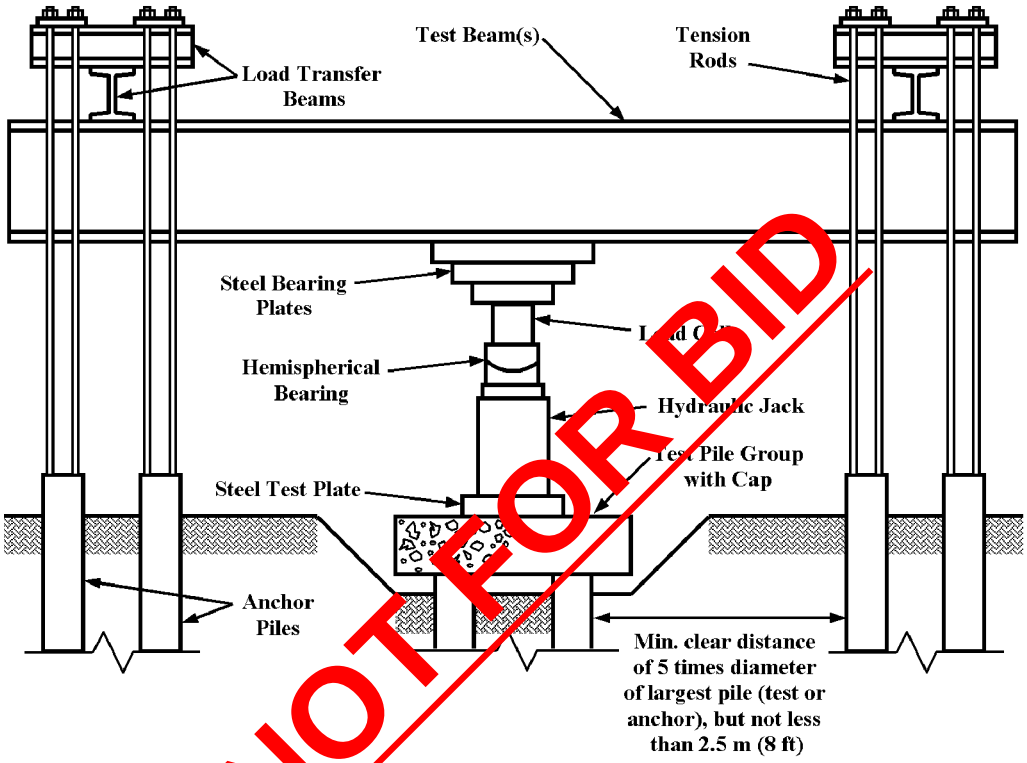

FIG. 2 Schematic Hydraulic Jack on a Pipe Group Acting Against Anchored Reaction Frame

NOT FOR BID

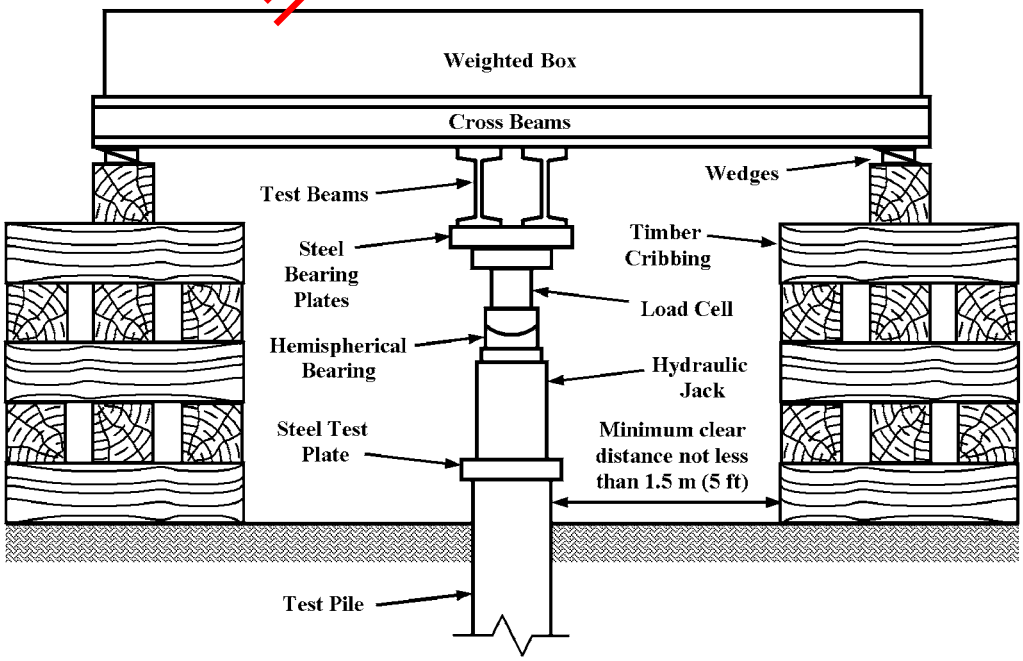

FIG. 3 Schematic Hydraulic Jack Acting Against Weighted Box or Platform

6.4.3 Load the box or platform with any suitable material such as soil, rock, concrete, steel, or water-filled tanks with a total weight (including that of the test beam(s) and the box or platform) at least 10 % greater than the maximum anticipated test load.

6.5 *Load Applied Directly Using Known Weights* (See Fig. 4, Fig. 5, and Fig. 6):

6.5.1 Center on the test pile or pile cap a test beam(s) of known weight and of sufficient size and strength to avoid excessive deflection under load with the ends supported on

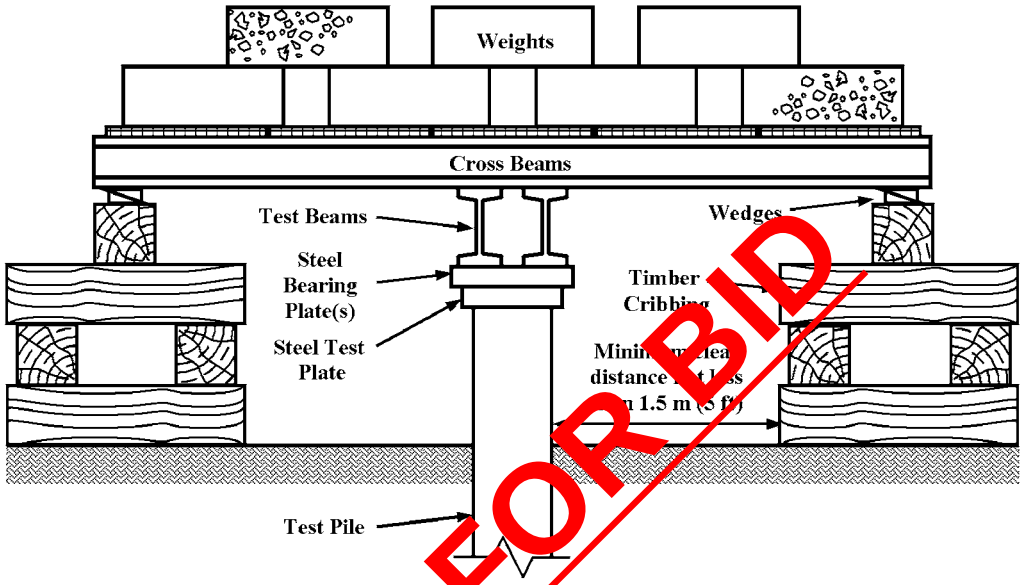

FIG. 4 Schematic of Direct Loading on a Single Pile Using Weighted Platform

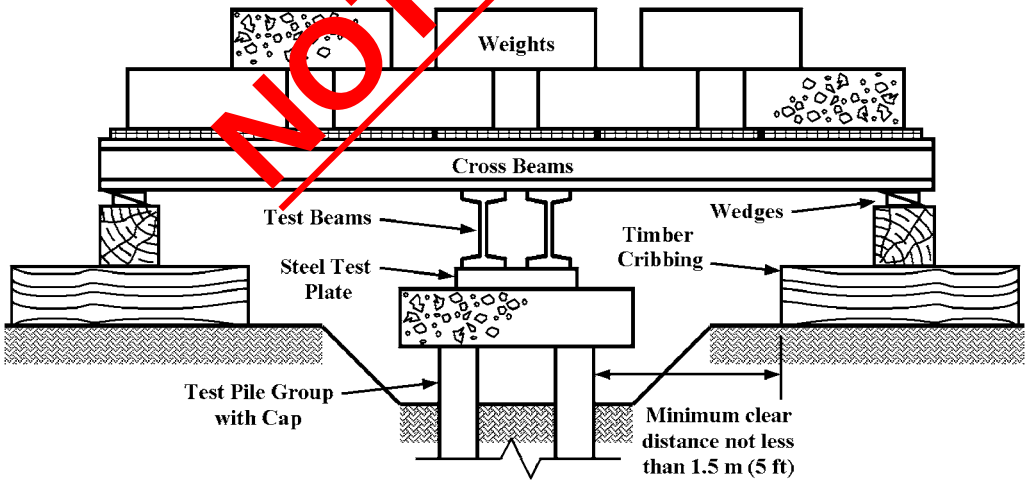

FIG. 5 Schematic of Direct loading on a Pile Group Using a Weighted Platform

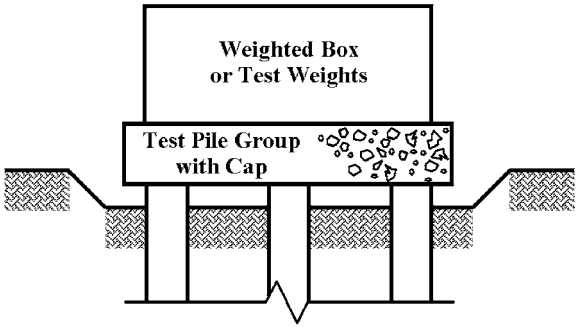

FIG. 6 Schematic of Direct Loading on a Pile Group

temporary cribbing if necessary to stabilize the beam(s). Alternatively, the known test weights or loading material may be applied directly on the pile or pile cap.

6.5.2 Center and balance a platform of known weight on the test beam(s) or directly on the pile cap with overhanging edges of the platform parallel to the test beam(s) supported by

NOT FOR BID

cribbing or by piles capped with timber beams, so that a clear distance of not less than 1.5 m (5 ft) is maintained between the supports and the test pile or pile group.

6.5.3 Place sufficient pairs of timber wedges between the top of the cribbing or timber cap beams and the bottom edges of the platform so that the platform can be stabilized during loading or unloading.

6.5.4 Apply the test loads to the pile or pile group using known weights. When loading the platform, remove any temporary supports at the ends of the test beam(s) and tighten the wedges along the bottom edges of the platform so that the platform is stable. Use loading materials such as steel or concrete so that the weight of incremental loads can be determined with accuracy of 5 %.

NOTE 5— Depending on the magnitude of the applied load and axial movement, platform stability may be difficult to control at or near a failure load when applying the load directly. The user should consider using a different load method when anticipating a failure load.

NOTE 6— The loading apparatus described in 6.5 may allow target rod level readings directly on the center of the pile top or pile cap to measure the pile top movement described in 7.2.4. To accommodate the target rod use a double test beam with sufficient space between the beams, leave a hole through the platform, and leave a line of sight between the test weights for survey level readings.

6.6 *Other Types of Loading Apparatus (optional)*— The Engineer may specify another type of loading apparatus satisfying the basic requirements of 6.1 or 6.2.

7. Apparatus for Measuring Movement

7.1 *General*:

7.1.1 Reference beams and wirelines shall be supported independent of the loading system, with supports firmly embedded in the ground at a clear distance from the test pile of at least five times the diameter of the test pile(s) but not less than 2.5 m (8 ft), and at a clear distance from any anchor piles of at least five times the diameter of the anchor pile(s) but not less than 2.5 m (8 ft). Reference supports shall also be located as far as practicable from any cribbing supports but not less than a clear distance of 2.5 m (8 ft).

7.1.2 Reference beams shall have adequate strength, stiffness, and cross bracing to support the test instrumentation and minimize vibrations that may degrade measurement of the pile movement. One end of each beam shall be free to move laterally as the beam length changes with temperature variations. Supports for reference beams and wirelines shall be isolated from moving water and wave action. Provide a tarp or shelter to prevent direct sunlight and precipitation from affecting the measuring and reference systems.

7.1.3 Dial and electronic displacement indicators shall conform to ASME B89.1.10.M Dial Indicators (For Linear Measurements) and should generally have a travel of 100 mm (4 in), but shall have a minimum travel of at least 50 mm (2 in). Provide greater travel, longer stems, or sufficient calibrated blocks to allow for greater travel if anticipated. Electronic indicators shall have a real-time display of the movement available during the test. Provide a smooth bearing surface for the indicator stem perpendicular to the direction of stem travel, such as a small, lubricated, glass plate glued in place. Except as required in 7.4, indicators shall have minimum graduations of 0.25 mm (0.01 in) or less, with similar accuracy. Scales used to measure pile movements shall have a length no less than 150 mm (6 in), minimum graduations of 0.5 mm (0.02 in) or less, with similar accuracy, and shall be read to the nearest 0.1 mm (0.005 in). Survey rods shall have minimum graduations of 1 mm (0.01 ft) or less, with similar accuracy, and shall be read to the nearest 0.1 mm (0.001 ft).

7.1.4 Dial indicators and electronic displacement indicators shall be in good working condition and shall have a full range calibration within three years prior to each test or series of tests. Furnish calibration reports prior to performing a test, including the ambient air temperature during calibration

7.1.5 Clearly identify each displacement indicator, scale, and reference point used during the test with a reference number or letter.

7.1.6 Indicators, scales, or reference points attached to the test pile, pile cap, reference beam, or other references shall be firmly affixed to prevent movement relative to the test pile or pile cap during the test. Unless otherwise approved by the Engineer, verify that reference beam and wireline supports do not move during the test by using a surveyor's level to take readings on a survey rod or a scale with reference to a permanent bench mark located outside of the immediate test area.

7.2 *Pile Top Axial Movements (See Fig. 7)*—

7.2.1 Unless otherwise specified, all axial compressive load tests shall include apparatus for measuring the axial movement of the test pile top, or piles within a group, or the pile group cap. This apparatus shall include a primary measurement system and at least one redundant, secondary system, using at least two of the systems described herein.

NOTE 7—When possible use displacement indicators as the primary system to obtain the most precise measurements. Use the redundant system(s) to check top movement data and provide continuity when the measuring system is disturbed or reset for additional movement.

NOTE 8—Pile top movements measured directly on the test pile have superior accuracy to measurements on the test plate, but with negligible difference when using a thin layer of grout on a sound pile, or with a test plate welded to the pile. However, users may wish to verify that the test plate and pile top do not move relative to each other using additional indicators (Fig. 7).

7.2.2 *Displacement Indicators*— Mount a minimum of two displacement indicators on the reference beams to bear on the pile top at axisymmetric points equidistant from the center of the test pile, or pile cap, with stems parallel to the longitudinal axis of the pile, inclined pile, or pile group. Orient two parallel reference beams, one on each side of the test pile or pile cap, in a direction that permits placing their supports as far as feasible from anchor piles or cribbing. Alternatively, mount the two indicators on axisymmetric points equidistant from the center of the test pile, or pile cap, with the stems parallel to the longitudinal axis of the pile or pile group to bear on the reference beams.

NOTE 9—For piles having a width or diameter greater than 2.5 ft (0.75 m), and for piles without good lateral support near the top, use four displacement indicators to compensate for lateral movement or rotation of the pile top.

NOTE 10—For tests on inclined piles, monitor lateral pile movements as

NOT FOR BID

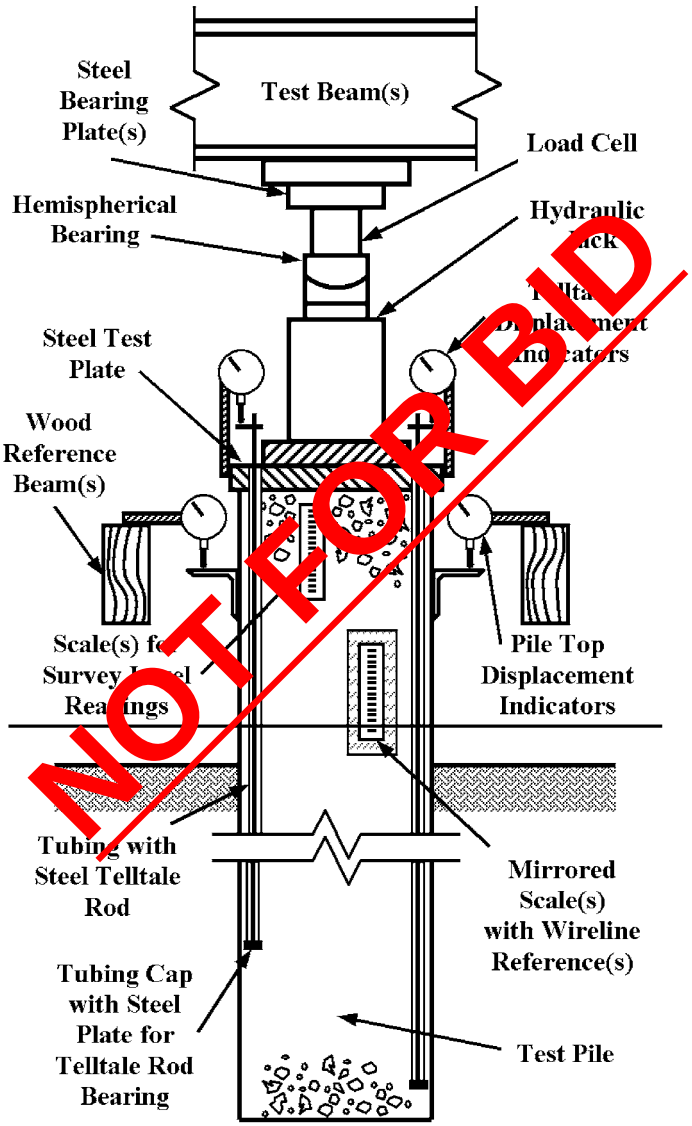

NOT FOR BID

FIG. 7 Schematic of Instrumentation of Measuring Axial Pile Movements

described in 7.3to detect instability that may result from gravitational forces during the test.

7.2.3 *Wireline, Mirror, and Scale*—Orient two wirelines parallel to each other and perpendicular to and located on opposite sides equidistant from the axis of the test pile, or pile group, in a direction that permits placing the wireline supports as far as practicable from anchor piles or cribbing. The wirelines shall include a weight or spring to maintain a constant tension force in the wire, so that, when plucked or tapped, the wireline will return to its original position. Use clean, uncoated steel wire with a diameter of 0.25 mm (0.01 in) or less for the wirelines. Each wireline shall pass across, and remain clear of, a scale mounted on the test pile or pile cap parallel to the axis of the pile or pile group. Mount the scale on a mirror affixed to the test pile or pile cap and use the wireline as a reference line to read the scale. Use the mirror to eliminate parallax error in the scale reading by lining up the wire and its image in the mirror. Align the wire not more than 13 mm (0.5 in) from the face of the scale.

7.2.4 *Surveyor's Level or Laser Beam*—Movement readings obtained using a surveyor's level or laser beam shall be taken on a survey rod or a scale and shall be referenced to a permanent bench mark located outside of the immediate test area or, alternatively, the surveyor's level shall be mounted on an object of fixed elevation (for example a driven pile) outside of the immediate test area. Reference points or scales used in taking displacement readings shall be mounted on the sides of the test pile or pile cap and located on opposite sides except that reference points may be located on top of the pile cap or readings may be taken on a single fixed point in the center of the test pile top, test plate or pile cap (see Fig. 6).

7.2.5 *Other Types of Measurement Systems (Optional)*—The Engineer may specify another type of measurement system satisfying the basic requirements of 7.2.

7.3 *Lateral Movements (Optional)* Measure the lateral movements of the top of the test pile or pile group to within an accuracy of 2.5 mm (0.1 in) using either of the following

methods: *(a)* two displacement indicators oriented in orthogonal directions, mounted with their stems perpendicular to the longitudinal axis of the test pile(s) and bearing against lubricated glass plates affixed to the sides of the test pile or pile cap, or *(b)* a surveyor's transit reading from scales mounted laterally on two perpendicular sides of the test pile or pile cap with readings referenced to fixed foresights or backsights. For tests on inclined piles, orient the indicators or scales parallel and perpendicular to the vertical plane of the incline and perpendicular to the longitudinal axis of the test pile(s).

7.4 *Pile Compression and Strain Measurements (Optional)* :

7.4.1 Measure the compression or strain of the test pile during loading at locations specified by the Engineer to help evaluate the distribution of load transfer from the pile to the surrounding soil.

7.4.2 Determine pile compression using displacement indicators to measure the relative movement between the pile top and an unstrained telltale rod (Figs. 7-10) bearing at a point within the pile. Unless located on the pile axis, install paired telltales in the pile with the rods in each pair oriented symmetrically opposite each other and equidistant from and parallel to the pile axis. Terminate telltale pairs near the pile bottom and at other points along the pile as required. Measure and record the distance from the pile top to the telltale termination point(s) to the nearest 10 mm (0.5 in). Install the telltales in a sheath or casing to insure free rod movement during the test. The rods shall have a rounded tip that bears on a clean steel plate affixed to the pile or shall be threaded into a nut affixed to the pile. Clean the telltale rods prior to installation, oil them during or after installation, and provide centralizers to restrain lateral movement but not axial movement at the pile top. The displacement indicators shall have a travel of at least a 5 mm (0.2 in) and minimum graduations of 0.01 mm (0.0001 in) or less, with similar accuracy. Mount a smooth bearing surface for the indicator stem on the telltale rod perpendicular to the direction of stem travel, such as a small, lubricated, glass plate clamped or glued in place.

7.4.3 *Other types of telltale (Optional)*—The Engineer may specify another type of telltale for the measurement of pile compression that satisfies the basic requirements of 7.4.2.

7.4.4 Measure pile strain directly using strain gages installed along the length of the pile axis. Install single gages along the pile axis, or gage pairs with the gages in each pair oriented symmetrically opposite each other and equidistant from and parallel to the pile axis. Measure and record the distance from the pile top to the gages to the nearest 10 mm (0.5 in). The gage type and installation shall be as specified by the Engineer and shall include temperature compensation as recommended by the gage manufacturer. Where feasible, measurement programs involving strain gages should include calibration of the fully instrumented pile and a complete history of gage readings starting before their installation in the pile.

NOTE 11—To interpret strain measurements and estimate pile stresses, the Engineer will require a depth profile describing the variation of pile constituents and their strength, cross sectional area, and stiffness. Stiffness properties may vary with the applied stress, especially for grout or concrete. Obtain this information from installation records and separate material property tests as needed.

8. Procedure

8.1 **Loading**:

8.1.1 *General:*

8.1.1.1 Apply test loads following one of the procedures described below for each test method, or as modified by the Engineer. If feasible, the maximum applied load should reach a failure that reflects the ultimate axial static compressive load capacity of the pile(s). Do not exceed the safe structural capacity of the pile, pile group, or the loading apparatus. Do not leave a loaded pile unattended.

8.1.1.2 To avoid excessive creep and possible structural failure of cast-in-place concrete piles, delay load testing after concrete placement to permit the fresh concrete to gain adequate strength and stiffness. Use test cylinders or cores of the fresh concrete to determine the appropriate wait time, recognizing that the test cylinders will generally cure more quickly than concrete in the pile.

8.1.1.3 The static axial capacity of piles typically changes as time elapses after pile installation, possibly increasing (setup) or decreasing (relaxation), depending on the soil or rock properties and the pore water pressure and soil structure disturbance induced by installation. This behavior may affect both driven piles and cast-in-place piles. The Engineer may specify a waiting period between pile installation and static testing to investigate time effects. The waiting period may range from 3 to 30 days, or longer, based on testing (for example redriving piles) or prior experience.

8.1.1.4 When temporarily dewatering a test site with piles installed in granular soils, maintain the groundwater level as near to the nominal elevation as possible and record the elevation of the groundwater surface during the test. Use the groundwater surface elevation measured during the test to correct the axial pile capacity when the groundwater level during the test deviates more than 1.5 m (5 ft) from the service groundwater elevation.

8.1.2 *Procedure A: Quick Test*—Apply the test load in increments of 5 % of the anticipated failure load. Add each load increment in a continuous fashion and immediately following the completion of movement readings for the previous load interval. Add load increments until reaching a failure load but do not exceed the safe structural capacity of the pile, pile group, or loading apparatus. During each load interval, keep the load constant for a time interval of not less than 4 min and not more than 15 min, using the same time interval for all loading increments throughout the test. Remove the load in five to ten approximately equal decrements, keeping the load constant for a time interval of not less than 4 min and not more than 15 min, using the same time interval for all unloading decrements Consider longer time intervals for the failure load to assess creep behavior and for the final zero load to assess rebound behavior.

8.1.3 *Procedure B: Maintained Test (Optional)*:

8.1.3.1 Unless failure occurs first, load the pile to a maximum maintained load of 200 % of the anticipated design load for tests on individual piles, or 150 % of the pile group design load, applying the load in increments of 25 % of the design load. Maintain each load increment until the rate of axial movement does not exceed 0.25 mm (0.01 in) per hour, with a

NOT FOR BID

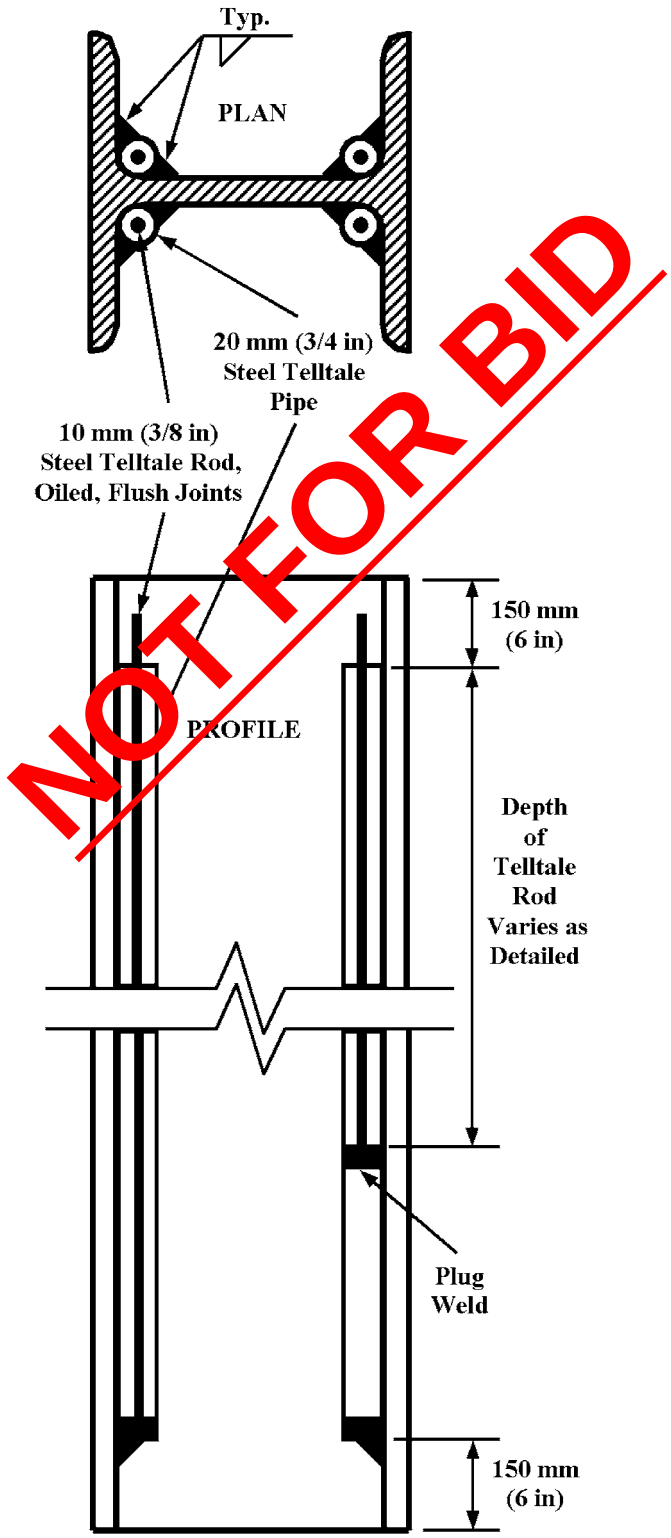

Note: Install Telltale Rods After Driving Pile

FIG. 8 Possible Installation of Telltales for Steel H-Piles

minimum time adequate to verify this movement rate based on the accuracy of the movement indicator readings, and with a maximum of 2 hr. After applying the maximum load and reaching an overall test duration of at least 12 hr, begin unloading when the axial movement measured over a period of 1 hr does not exceed 0.25 mm (0.01 in); otherwise allow the maximum load to remain on the pile or pile group for 24 hr. If failure occurs during loading, maintain the failure load, or the

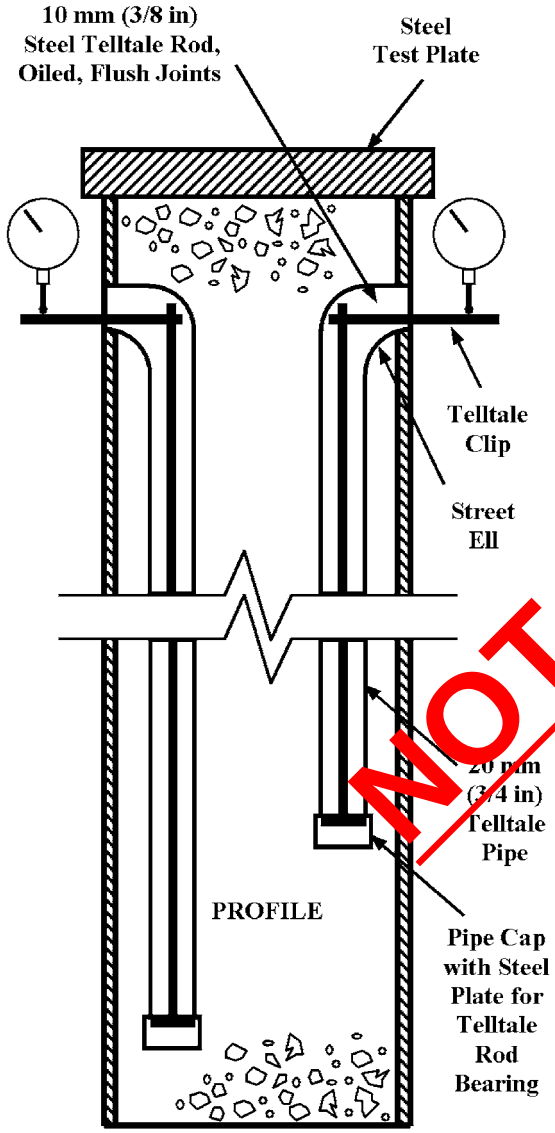

Note: Install Telltale Pipes, Install Telltale Rods, and Fill Pipe with Concrete After Driving

FIG. 9 Possible Installation of Telltales for Pipe Piles

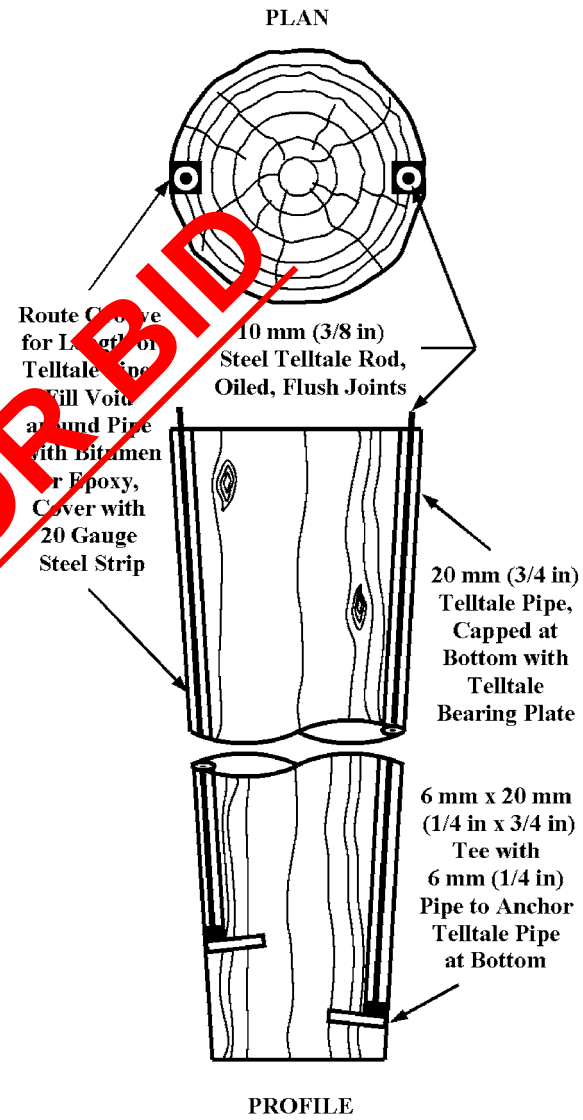

Note: Install Telltale Rods After Driving

FIG. 10 Possible Installation of Telltales for Timber Piles

NOT FOR BID

maximum load possible, until the total axial movement equals 15 % the pile diameter or width. After completing the final load increment, remove the load in decrements of 25 % of the maximum test load with 1 hr between decrements.

8.1.3.2 If using the direct loading method described in 6.5, include in the first load increment the weight of the test beam(s) and the platform that bear directly on the pile. Before adding or removing load increments, tighten the wedges along the platform edges to stabilize the platform. Place or remove load increments in a manner which avoids impact and maintains the load balanced at all times. After each load increment has been added, loosen (but do not remove) the wedges and keep them loose to permit the full load to act on the pile as it moves.

NOTE 12— If negligible permanent axial movement occurs after unloading the pile, consider reloading the test pile(s) to a greater load or use the procedure in section 8.4. If the test pile(s) approach failure during the maintained loading procedure, consider decreasing the final load increments to obtain a more accurate failure load.

8.1.4 *Procedure C: Loading in Excess of Maintained Test (Optional)*—After the load has been applied and removed in accordance with 8.3, reload the test pile or pile group to the maximum maintained load in increments of 50 % of the pile or pile group design load, allowing 20 min between load increments. Then apply additional load in increments of 10 % of the design load for the pile or pile group until reaching the maximum required load or failure, allowing 20 min between load increments. If failure occurs continue jacking the pile until the settlement equals 15 % of the pile diameter or width. If failure does not occur, hold the full load for 2 hr and then remove the load in four equal decrements, allowing 20 min between decrements.

8.1.5 *Procedure D: Constant Time Interval Loading Test*—Follow the procedures of , but apply the load in increments of 20 % of the pile or group design load with 1 hr between load increments. Then unload the piles with 1 hr between load decrements.

8.1.6 *Procedure E: Constant Rate of Penetration Test (optional)*

8.1.6.1 The apparatus for applying loads shall have a capacity as specified and shall be in accordance with section 6.3 or 6.4. Use a mechanical hydraulic jacking system equipped with a bleed valve, variable speed device, or other means for providing a smooth variable pressure delivery.

8.1.6.2 Vary the applied load as necessary to maintain a pile penetration rate of 0.25 to 1.25 mm (0.01 to 0.05 in) per minute for cohesive soil or 0.75 to 2.5 mm (0.03 to 0.10 in) per minute for granular soils, or as specified by the Engineer. Continue loading the pile until achieving continuous penetration at the specified rate. Hold the maximum applied load until obtaining a total pile penetration of at least 15 % of the average pile diameter or width, or until the pile stops penetrating. Gradually release the final load to protect the load and measurement systems

8.1.6.3 Control the rate of penetration by checking the time taken for successive small equal increments of penetration and then adjusting the jacking accordingly. Alternatively, use a mechanical or electrical device to monitor and control the penetration rate so that it remains constant.

8.1.6.4 See for measurement procedures. When using a video recording system, locate all gages for easy reading within the camera's field of view, as well as a digital clock displaying time to the nearest second.

8.1.7 *Procedure F: Constant Movement Increment Test (Optional)*

8.1.7.1 Apply test loads in increments required to produce pile top movement increments equal to approximately 1 % of the average pile diameter or width. Vary the applied load as necessary to maintain each movement increment, and do not apply additional load until the rate of load variation to hold that movement increment constant is less than 1 % of the total applied load per hr. Continue loading the pile in such increments until the total movement equals 15 % of the average pile diameter or width.

8.1.7.2 Remove the final test load in four equal decrements after maintaining the final movement increment until the rate of load variation is less than 1 % of the total applied load per hour. After removing the first load decrement, do not remove additional decrements until the rate of pile rebound for the preceding load decrement is less than 0.3 % of the average pile diameter or diagonal dimension per hour.

8.1.8 *Procedure G: Cyclic Loading Test (optional)*— For the first application of test load increments, apply such increments in accordance with . After the application of loads equal to 50, 100 and 150 % of the pile design load for tests of individual piles or 50 and 100 % of the group design load for tests on pile groups, maintain the total test load in each case for 1 hr and remove the load in decrements equal to the loading increments, allowing 20 min between decrements. After removing each maximum applied load, reapply the load to each preceding load level in increments equal to 50 % of the design load, allowing 20 min between increments. Apply additional loads in accordance with. After the maximum required test load has been applied, hold and remove the test load in accordance with .

8.2 **Recording Test Readings**

8.2.1 *General:*

8.2.1.1 For the recorded time intervals described below for each test method, record the time, applied load, and movement readings (displacement, and strain if measured) for each properly identified gage, scale, or reference point taken as nearly simultaneously as practicable. The Engineer may specify different reading intervals from those given below as needed to satisfy the objectives of a particular test pile program. Obtain additional test readings as specified by the Engineer, or as convenient for testing purposes, i.e. when using a datalogger to record readings at a constant time interval. When using the loading procedure described in 6.5, take the zero-load reading before placing the test beam(s) and platform on the pile(s). Clearly record and explain any field adjustments made to instrumentation or recorded data.

8.2.1.2 Verify the stability of the reference beams and load reaction system (including reaction piles) using a surveyor's level or transit and target rod or scales to determine movement. Record readings taken before applying any test load, at the proposed design load, at the maximum test load, and after the removal of all load. Intermediate readings for each load increment are recommended to provide additional quality assurance and detect potential failure of the load reaction system.

8.2.1.3 When using embedded strain gages to obtain incremental strain measurements as in 7.4 record strain readings just before starting the test and, as a minimum, during the test whenever recording readings of time, load, and movement. The Engineer may also require gage readings taken before and after the pile installation to obtain a complete strain history and investigate residual stress behavior.

8.2.2 *Procedure A: Quick Test*—Record test readings taken at 0.5, 1, 2 and 4 min after completing the application of each load increment, and at 8 and 15 min when permitted by longer load intervals. Record test readings taken at 1 and 4 min after completing each load decrement, and at 8 and 15 min when permitted by a longer unload intervals. Record readings taken at 1, 4, 8 and 15 min after all load has been removed.

NOTE 13—The movement measured between readings for a given load increment provides an indication of creep behavior.

8.2.3 *Procedure B: Maintained Test (also Procedures C, D, and G) (Optional)*—Record test readings taken before and after the application of each load increment or decrement. During each load interval, provided that the test pile or pile group has not failed, record additional readings taken at 5, 10, and 20 min following application of the load increment, and every 20 min thereafter as needed. After applying the total load, provided that the test pile or pile group has not failed, record additional readings taken at 5, 10, and 20 min, then every 20 min up to 2 hrs, then every hour from 2 to 12 hrs, and then every 2 hrs from 12 to 24 hrs as needed. If pile failure occurs, also record readings taken immediately before removing the first load

NOT FOR BID

decrement. During unloading, record readings taken at time intervals of 20 min. Record final readings 12 hr after removing all load.

8.2.4 *Procedure E: Constant Rate of Penetration (Optional)*—Record test readings taken at least every 30 s or at sufficient intervals to determine the actual rate of penetration. Operate any automatic monitoring and recording devices continuously during each test. When the test pile has achieved its specified rate of penetration, continue to take and record readings for the duration of the loading, and determine the maximum load applied. Take and record readings immediately after unloading and again 1 h after removing all load.

8.2.5 *Procedure F: Constant Movement Increment (Optional)*—Record test readings taken immediately before and after each movement increment with sufficient intermediate readings so as to determine the rate of load variation and the actual load required to maintain each settlement increment. During unloading, record readings taken immediately before and after the removal of each load decrement with sufficient intermediate readings so as to determine the rate of pile rebound. Record final readings taken 12 h after removing all load.

9. Safety Requirements

9.1 All operations in connection with pile load testing shall be carried out in such a manner so as to minimize, avoid, or eliminate the exposure of people to hazard. The following safety rules are in addition to general safety requirements applicable to construction operations:

9.1.1 Keep all test and adjacent work areas, walkways, platforms, etc. clear of scrap, debris, small tools, and accumulations of snow, ice, mud, grease, oil, or other slippery substances.

9.1.2 Provide timbers, blocking and cribbing materials made of quality material and in good serviceable condition with flat surfaces and without rounded edges.

9.1.3 Hydraulic jacks shall be equipped with spherical bearing plates or shall be in complete and firm contact with the bearing surfaces and shall be aligned so as to avoid eccentric loading.

9.1.4 Loads shall not be hoisted, swung, or suspended over anyone and shall be controlled by tag lines.

9.1.5 The test beam(s), reaction frame, anchor piles and other anchoring devices, test boxes, and their connections and supports shall be designed and approved by a qualified engineer and installed to transmit the required loads with an adequate factor of safety.

9.1.6 For tests on inclined piles, all inclined jacks, bearing plates, test beam(s), or frame members shall be firmly fixed into place or adequately blocked to prevent slippage upon release of load.

9.1.7 All reaction loads shall be stable and balanced. When using loading method in 6.5, safety wedges shall be in place at all times to prevent the platform from tipping. During testing, movements of the reaction load or system should be monitored to detect impending unstable conditions.

9.1.8 All test beams, reaction frames, platforms, and boxes shall be adequately supported at all times.

9.1.9 Only authorized personnel shall be permitted within the immediate test area, and only as necessary to monitor test equipment. As best as possible, locate pumps, load cell readouts, dataloggers, and test monitoring equipment at a safe distance away from jacks, loaded beams, weighted boxes, dead weights, and their supports and connections.

10. Report

10.1 The report of the load test shall include the following information as required by the Engineer and as appropriate to the pile type, test apparatus, and test method:

10.1.1 *General*:

10.1.1.1 Project identification and location,

10.1.1.2 Test site location,

10.1.1.3 Owner, structural engineer, geotechnical engineer, pile contractor, boring contractor,

10.1.1.4 Nearest test boring(s) or sounding(s), and their location with reference to test location,

10.1.1.5 Insitu and laboratory soil test results, and

10.1.1.6 Horizontal and vertical control datum.

10.1.2 *Pile Installation Equipment*:

10.1.2.1 Make, model, type and size of hammer,

10.1.2.2 Weight of hammer and ram,

10.1.2.3 Stroke or ram,

10.1.2.4 Rated energy of hammer,

10.1.2.5 Rated capacity of boiler or compressor,

10.1.2.6 Type and dimensions of capblock and pile cushion,

10.1.2.7 Weight and dimensions of drive cap and follower,

10.1.2.8 Size of predrilling or jetting equipment,

10.1.2.9 Weight of clamp, follower, adaptor, and oscillator for vibratory driver.

10.1.2.10 Type, size, length, and weight of mandrel,

10.1.2.11 Type, size, and length of auger,

10.1.2.12 Type and size of grout pump, and

10.1.2.13 Type, size, wall thickness, and length of drive casing.

10.1.2.14 Detailed description of drilling equipment and techniques,

10.1.2.15 Size, type, length, and installation or extraction method of casings or a combination thereof.

10.1.3 *Test and Anchor Pile Details*:

10.1.3.1 Identification and location of test and anchor piles,

10.1.3.2 Design load of test pile or pile group,

10.1.3.3 Type and dimensions of test and anchor piles

10.1.3.4 Test pile material including basic specifications,

10.1.3.5 Pile quality including knots, splits, checks and shakes, and straightness of piles, preservative treatment and conditioning process used for timber test piles including inspection certificates,

10.1.3.6 Wall thickness of pipe test pile,

10.1.3.7 Weight per foot of H test pile,

10.1.3.8 Description of test pile tip reinforcement or protection,

10.1.3.9 Description of banding–timber piles,

10.1.3.10 Description of special coatings used,

10.1.3.11 Test pile (mandrel) weight as driven,

10.1.3.12 Date precast test piles made,

10.1.3.13 Details of concrete and/or grout mix design,

NOT FOR BID

10.1.3.14 Concrete and/or grout placement techniques and records ,

10.1.3.15 Concrete and/or grout sample strengths and date of strength test,

10.1.3.16 Description of internal reinforcement used in test pile (size, length, number longitudinal bars, arrangement, spiral, or tie steel),

10.1.3.17 Condition of precast piles including spalled areas, cracks, top surface, and straightness of piles.

10.1.3.18 Effective prestress,

10.1.3.19 Degree of inclination for each pile,

10.1.3.20 Length of test pile during driving,

10.1.3.21 Final pile top and bottom elevations, and ground elevation referenced to a datum,

10.1.3.22 Embedded length–test and anchor piles,

10.1.3.23 Tested length of test pile, and

10.1.3.24 Final elevation of test pile butt(s) referenced to fixed datum.

10.1.4 *Test and Anchor Pile Installation*:

10.1.4.1 Date installed,

10.1.4.2 Volume of concrete or grout placed in pile,

10.1.4.3 Grout pressure used,

10.1.4.4 Description of pre-excavation or jetting (depth, size, pressure, duration),

10.1.4.5 Operating pressure for double acting and differential type hammers,

10.1.4.6 Throttle setting–diesel hammer (at final driving),

10.1.4.7 Fuel type–diesel hammer,

10.1.4.8 Horsepower delivered and frequency of vibratory driver during final 10 ft (3 m) of pile penetration,

10.1.4.9 Description of special installation procedures used such as piles cased off,

10.1.4.10 Type and location of pile splices,

10.1.4.11 Driving or drilling records,

10.1.4.12 Final penetration resistance (blows per inch),

10.1.4.13 Rate of pile penetration for last 10 ft (3 m) s/ft, vibratory driving,

10.1.4.14 When capblock replaced (indicate on log),

10.1.4.15 When pile cushion replaced (indicate on log),

10.1.4.16 Cause and duration of interruptions in pile installation, and

10.1.4.17 Notation of any unusual occurrences during installation.

10.1.5 *Pile Testing*:

10.1.5.1 Date and type of test,

10.1.5.2 Temperature and weather conditions during tests,

10.1.5.3 Number of piles in group test,

10.1.5.4 Brief description of load application apparatus, including jack capacity,

10.1.5.5 Description of instrumentation used to measure pile movement including location of indicators, scales, and other reference points with respect to pile top,

10.1.5.6 Description of special instrumentation such as strain rods or strain gages including location of such with reference to pile top,

10.1.5.7 Special testing procedures used,

10.1.5.8 Tabulation of all time, load, and movement readings,

10.1.5.9 Identification and location sketch of all gages, scales, and reference points,

10.1.5.10 Description and explanation of adjustments made to instrumentation or field data, or both,

10.1.5.11 Notation of any unusual occurrences during testing,

10.1.5.12 Test jack and other required calibration reports,

10.1.5.13 Groundwater level, and

10.1.5.14 Suitable photographs showing the test instrumentation and set-up.

11. Precision and Bias

11.1 *Precision*—Test data on precision is not presented due to the nature of this test method. It is either not feasible or too costly at this time to have ten or more agencies participate in an in situ testing program at a given site

11.1.1 Subcommittee D18.11 is seeking any data from the users of this test method that might be used to make a limited statement on precision.

11.2 *Bias*—There is no accepted reference value for this test method, therefore, bias cannot be determined.

12. Keywords

12.1 axial static pile capacity; field testing; jack; load cell; loading procedure; reference beam

NOT FOR BID

APPENDIX

(Nonmandatory Information)

X1. SOME FACTORS INFLUENCING INTERPRETATION OF TEST RESULTS

X1.1 Potential residual loads in the pile which could influence the interpreted distribution of load at the pile tip and along the pile shaft.

X1.2 Possible interaction of friction loads from test pile with upward friction transferred to the soil from anchor piles obtaining part or all of their support in soil at levels above the tip level of the test pile.

X1.3 Changes in pore water pressure in the soil caused by pile driving, construction fill, and other construction operations which may influence the test results for frictional support in relatively impervious soils such as clay and silt.

X1.4 Differences between conditions at time of testing and after final construction such as changes in grade or groundwater level.

X1.5 Potential loss of soil supporting test pile from such things as excavation and scour.

X1.6 Possible differences in the performance of a pile in a group or of a pile group from that of a single isolated pile.

X1.7 Affect on long-term pile performance of factors such as creep, environmental effects on pile material, negative friction loads not previously accounted for, and strength losses.

X1.8 Type of structure to be supported, including sensitivity of structure to settlements and relation between live and dead loads.

X1.9 Special testing procedures which may be required for the application of certain acceptance criteria or methods of interpretation.

X1.10 Requirement that non tested pile(s) have essentially identical conditions to those for tested pile(s) including, but not limited to, subsurface conditions, pile type, length, size and stiffness, and pile installation methods and equipment so that application or extrapolation of the test results to such other piles is valid.

NOT FOR BID

SUMMARY OF CHANGES

In accordance with Committee D 18 policy, this section identifies the location of the changes to this standard since the last edition (D 4719 – 94) that may impact the use of this test method.

(*1*) Reorganization following current D18 guidelines including elimination of the "Introduction" and addition of "Terminology" and "Significance and Use".
(*2*) Changed title and text to indicate multiple procedures and include deep foundations that function similar to driven piles.
(*3*) Inclusion of current D18 caveats, D 3740 and D 6026.
(*4*) Change Quick Test Method to preferred. Previous Standard Method now shown as "Maintained Test". The Engineer may choose and optional method as provided.
(*5*) When using jacks, require hemispherical bearings and load cell(s) for tests over 100 tons.
(*6*) Include specific requirements for test plates.
(*7*) Addition of references for pressure gages and displacement indicators.
(*8*) Additional requirements for measuring systems and testing time intervals.

ASTM International takes no position respecting the validity of any patent rights asserted in connection with any item mentioned in this standard. Users of this standard are expressly advised that determination of the validity of any such patent rights, and the risk of infringement of such rights, are entirely their own responsibility.

This standard is subject to revision at any time by the responsible technical committee and must be reviewed every five years and if not revised, either reapproved or withdrawn. Your comments are invited either for revision of this standard or for additional standards and should be addressed to ASTM International Headquarters. Your comments will receive careful consideration at a meeting of the responsible technical committee, which you may attend. If you feel that your comments have not received a fair hearing you should make your views known to the ASTM Committee on Standards, at the address shown below.

This standard is copyrighted by ASTM International, 100 Barr Harbor Drive, PO Box C700, West Conshohocken, PA 19428-2959, United States. Individual reprints (single or multiple copies) of this standard may be obtained by contacting ASTM at the above address or at 610-832-9585 (phone), 610-832-9555 (fax), or service@astm.org (e-mail); or through the ASTM website (www.astm.org).

(THIS PAGE INTENTIONALLY LEFT BLANK)

NOT FOR BID

NOT FOR BID

SECTION 132950 – PREFABRICATED PEDESTRIAN BRIDGE

PART 1 – GENERAL

1.1 SUMMARY

A. The item shall consist of furnishing, fabricating and erecting a fully engineered, prefabricated pedestrian clear span steel bridge in conformance with the requirements and details shown on the plans and/or the approved shop drawings. In addition, the item shall consist of furnishing and installing a hardwood timber bridge deck in accordance with these specifications and in reasonably close conformity with the lines, grades and dimensions as shown on the plans and/or established in the field.

1.2 SUBMITTALS

A. Product Data: For each type of product indicated.

B. Shop Drawings: Include plans, elevations, sections, details, and attachments details.

1. Shop drawings and design computations shall be submitted to the Engineer for approval prior to fabrication of material. Design calculations and drawings shall be signed and sealed by a Professional Engineer registered in the State of Delaware. Schematic drawings and diagrams shall be unique drawings, prepared to illustrate the specific portion of the work to be done.

2. Structural calculations for the bridge superstructure shall be submitted by the bridge manufacturer for review by the approving engineer. All calculations shall be signed and sealed by a Professional Engineer who is licensed in the state of Delaware. The calculations shall include all design information necessary to determine the structural adequacy of the bridge. The calculations shall include the following:

   i. All AISC allowable stress checks for axial, bending and shear forces in the critical member of each truss member type (i.e. top chord, bottom chord, floor beam, vertical, etc.).
   ii. Checks for the critical connection failure modes for each truss member type (i.e. vertical, diagonal, floor beam, etc.). Special attention shall be given to all welded tube on tube connections (see section 3.3.2 for design check requirements).
   iii. All bolted splice connections.
   iv. Main truss deflection checks. U-Frame stiffness checks (used to determine K factors for out-of-plane buckling of the top chord) for all half through or "pony" truss bridges.
   v. Deck design.

NOTE: The analysis and design of triangulated truss bridges shall account for moments induced in members due to joint fixity where applicable. Moments due to both truss deflection and joint eccentricity must be considered.

C. Material test reports and certificates.

D. Warranty

1. The bridge manufacturer shall warrant their steel structure(s) to be free of design, material and workmanship defects for a period of ten years from the date of delivery. Pultruded fiberglass deck material shall be manufactured by an ISO-9001 certified manufacturer and warranted.

E. Quality Certification

1. Bridge(s) shall be fabricated by a fabricator who is currently certified by the American Institute of Steel Construction to have the personnel, organization, experience, capability, and commitment to produce fabricated structural steel for the category "Major Steel Bridges" as set forth in the AISC Certification Program. Quality control shall be in accordance with procedures outlined for AISC certification. For painted structures, the fabricator must hold a "Sophisticated Paint Endorsement" as set forth in the AISC certification program. Furthermore, the bridge(s) shall be fabricated in a facility owned and/or leased by the corporate owner of the manufacturer, and fully dedicated to bridge manufacturing.

NOT FOR BID

PART 2 – PRODUCTS

2.1 QUALIFIED SUPPLIERS

A. The bridge manufacturer shall have been in the business of design and fabrication of bridges for a minimum of five years and provide a list of five successful bridge projects, of similar construction, each of which has been in service at least three years. List the location, bridge size, owner and contact reference for each bridge.

B. Some names of possible fabricators and suppliers of the pedestrian bridge are as follows:

Contech Engineered Solutions, LLC
8301 State Highway 29 North
Alexandria, Minnesota 56308
(800) 328-2047

Excel Bridge Manufacturing Company
12001 Shoemaker Avenue
Santa Fe Springs, California 90670
(320)762-1368

2.2 PERFORMANCE REQUIREMENTS

A. Structural Performance: The complete steel and timber structure assembly including bearings shall be designed using either load factor or working stress methods to provide appropriate safety factors

to withstand the combined and total effects of the following loads applied in combinations as shown in the latest AASHTO Standard Specifications for Highway Bridges:

1. Maximum uniform live load of 90 pounds per square foot applied to the entire deck area. Reduction of pedestrian live load shall be in accordance with AASHTO Guide Specification for Design of Pedestrian Bridges.

2. Live load AASHTO H10 vehicle load with no impact factor applied.

3. Dead load and superimposed dead loads of the structure.

4. Wind load in accordance with AASHTO Section 3.15 for a design wind speed of 85 mph.

5. Top chord lateral force of not less than 300 pounds per linear foot for half through truss.

6. Earthquake loading in accordance with 1996 AASHTO Standard Specifications, Division I-A (Seismic Design), Seismic Performance Category 'B'.

B. Pedestrian bridge shall be a low profile Pratt style, half-through pony truss design, cambered to offset 100% of the dead load deflections plus 1% of the full length of the bridge. Bridge railing shall be a continuous life safety rail with a maximum clear opening of 4 inches between vertical pickets, and one diagonal per truss panel. Railing height shall be 54 inches with a timber rub rail at the top and a steel toe plate at the bottom, as shown on the contract drawings. Bridge shall be designed and fabricated to meet the requirements of the Americans with Disabilities Act (ADA), and the current ADA Standards for Accessible Design.

NOT FOR BID

2.3 STEEL MATERIALS

A. The requirements of Section 615 of DelDOT's Standard Specifications shall be applicable for the steel superstructure except as modified herein and on the plans.

B. The steel members shall conform to the following: Bridges which are not to be painted shall be fabricated from high strength, low alloy, atmospheric corrosion resistant ASTM A847 cold-formed welded square and rectangular tubing and/or ASTM A588, or ASTM A242, ASTM A606 plate and structural steel shapes (Fy = 50,000 psi). The minimum corrosion index of atmospheric corrosion resistant steel, as determined in accordance with ASTM G101, shall be 6.0.

1. All members of the vertical trusses (top and bottom chords, verticals, and diagonals) shall be fabricated from square and/or rectangular structural steel tubing. Other structural members and bracing shall be fabricated from structural steel shapes or square and rectangular structural steel tubing.

2. All structural shapes, plates, tubes and bars shall have a minimum thickness of 5/16".

3. Minimum thickness of non-structural tubular members shall be 1/4".

4. Field splices shall be bolted with high strength AASHTO M164 (ASTM A325) or AASHTO M253 (ASTM A490) bolts; Type III bolts are required for "Weathering Steel" bridges.

5. All Welding shall be in accordance with the latest edition of AASHTO/AWS D1.5 Bridge Welding Code.

6. All Welding of structural steel tubular members shall be in accordance with the latest edition on ANSI/AWS D1.1 Structural Welding Code.

7. Beveled steel slide plates shall be provided and installed over deck expansion points at each end of the bridge between the deck and the abutment.

8. Bridge bearings shall consist of a steel setting or slide plate placed on the abutment or grout pad. The bridge bearing plate which is welded to the bridge structure shall bear on this setting plate. One end of the bridge will be fixed by fully tightening the nuts on the anchor bolts at that end. The opposite end will have finger tight only nuts to allow movement under thermal expansion or contraction. Bearings shall provide adequate attachment of the superstructure to the substructure to resist uplift and shall be fabricated to accommodate the difference in elevation between abutments. Provisions shall be made to accommodate movement resulting from variation in temperature as require for span length. Bearings shall be designed, fabricated and supplied by the bridge manufacturer.

1. The contractor shall provide and install the anchor bolts in accordance with the manufacturer's anchor bolt spacing dimensions. Information as to bridge support reactions and anchor bolt locations will be furnished by the bridge manufacturer after receipt of order and after the bridge design is complete.

2.4 Pultruded Fiberglass Deck

A. Pultruded fiberglass decking shall conform to the following:

1. The Pultruded deck shall be fabricated from bearing bars and cross rods manufactured by the pultrusion process. The glass fiber reinforcement for the bearing bars shall be a core of continuous glass strand rovings wrapped with continuous strand glass mat. A synthetic surface veil fabric with an ultraviolet inhibitor shall encase the glass reinforcement..

2. Individual I-Bars shall be supported by a 3-piece cross rod system. Distance between I-Bars shall not exceed ¼ inch in accordance with the Americans with Disabilities Act (ADA), and the current ADA Standards for Accessible Design, and shall be oriented perpendicular to the supporting stringers. Decking shall be grey in color.

3. Pultruded fiberglass decking products shall be manufactured and fabricated in the USA. Manufacturer shall provide a written Certificate of Compliance.

NOT FOR BID

3. Fiberglass grating shall be made from a chemical resistant, fire retardant polyester, or vinyl ester resin system to meet the flame spread rating of 25 or less in accordance with ASTM E-84 testing, the flammability characteristics of UL 94 V0 and satisfies the self-extinguishing requirements of ASTM D-635. UV inhibitors are added to the resin to reduce UV attack.

4. Decking shall be supplied that meet or exceed the Static Coefficient of Friction for both Neolite and leather shoes in accordance with ASTM Test Method C1028-89.

	FORCE IN POUNDS	
SHOE MATERIAL	DRY	WET
Neolite	0.73	0.69
Leather	0.55	0.79

NOT FOR BID

2.5 ENGINEERING

1. The top chord, truss verticals, and floor beams shall be designed for lateral wind loads and for any loads required to provide top chord stability; however, in no case shall the load be less than 50 pounds per lineal foot or a 200 pound point load, whichever produces greater stresses, applied in any direction at any point along the top chord or at the top of the safety system (42" or 54" above deck level), if higher than the top chord.

2. When the collection of water inside a structural tube is a possibility, either during construction or during service, the tube shall be provided with a drain hole at its lowest point to let water out.

2.6 DESIGN LIMITATIONS

A. Deflection

1. Vertical Deflection of the main trusses due to service pedestrian live load shall not exceed 1/400 of the span.

2. The vertical deflection of cantilever spans of the structure due to service pedestrian live load shall not exceed 1/300 of the cantilever arm length.

3. The deflection of the floor system members (floor beams and stringers) due to service pedestrian live load shall not exceed 1/360 of their respective spans.

4. The service pedestrian live load shall be 85 PSF, reduced in accordance with Section 3.1.2.1, but should in no case be less than 65 PSF for deflection checks.

5. Deflection limits due to occasional vehicular traffic shall not be considered.

6. The horizontal deflection of the structure due to lateral wind loads shall not exceed 1/500 of the span under an 85 MPH (25 PSF) wind load

NOT FOR BID

PART 3 – EXECUTION

3.2 PULTRUDED FIBERGLASS DECK ATTACHMENT

1. At time of installation, deck panels are to be placed with a 1/8 inch to 1/4 inch gap.

2. Floor panels shall be attached with corrosion resistant metal clips with at least two fasteners where panels cross supporting members.

3. All fasteners shall be hot-dipped galvanized, stainless steel or other approved material . Self-tapping screws or hex-head bolts, with a steel plank hold-down, are to be used at the ends of planks. Self-tapping screws or carriage bolts are to be used as interior connection fasteners when required. Power actuated fasteners will not be allowed.

4. Panels are not to be drilled for installation of bolts and/or screws.

5. NOTE: Attachments at the ends of the planks may be modified as required when obstructions, such as interior safety system elements, prevent installation of the specified hold-down system.

NOT FOR BID

3.3 DELIVERY AND ERECTION

A. The manufacturer will provide detailed, written instruction in the proper lifting procedures and splicing procedures (if required). The method and sequence of erection shall be the responsibility of others.

B. The bridge manufacturer shall provide written inspection and maintenance procedures to be followed by the bridge owner.

C. The bridge manufacturer shall provide manufacturers cut sheets for deck materials.

END OF SECTION 132950

NOT FOR BID

SECTION 311000 - SITE CLEARING

PART 1 - GENERAL

1.1 SUMMARY

A. Section Includes:

1. Protecting existing vegetation to remain.
2. Removing existing vegetation.
3. Clearing and grubbing.
4. Stripping and stockpiling topsoil.
5. Removing above- and below-grade site improvements.
6. Disconnecting, capping, or sealing site utilities.
7. Temporary erosion and sedimentation control.

1.2 PREINSTALLATION MEETINGS

A. Preinstallation Conference: Conduct conference at Project site.

1.3 MATERIAL OWNERSHIP

A. Except for materials indicated to be stockpiled or otherwise remain Owner's property, cleared materials shall become Contractor's property and shall be removed from Project site.

1.4 FIELD CONDITIONS

A. Traffic: Minimize interference with adjoining roads, streets, walks, and other adjacent occupied or used facilities during site-clearing operations.

1. Do not close or obstruct streets, walks, or other adjacent occupied or used facilities without permission from Owner and authorities having jurisdiction.
2. Provide alternate routes around closed or obstructed trafficways if required by Owner or authorities having jurisdiction.

B. Salvageable Improvements: Carefully remove items indicated to be salvaged and store on Owner's premises where indicated.

C. Utility Locator Service: Notify utility locator service for area where Project is located before site clearing.

D. Do not commence site clearing operations until temporary erosion- and sedimentation-control and plant-protection measures are in place.

E. Tree- and Plant-Protection Zones: Protect according to requirements shown on the Plans and as require by the DNREC Delaware Erosion & Sediment Control Handbook, current edition.

PART 2 - PRODUCTS

2.1 MATERIALS

A. Satisfactory Soil Material: Requirements for satisfactory soil material are specified in Section 312000 "Earth Moving."

1. Obtain approved borrow soil material off-site when satisfactory soil material is not available on-site.

PART 3 - EXECUTION

3.1 PREPARATION

A. Protect and maintain benchmarks and survey control points from disturbance during construction.

B. Verify that trees, shrubs, and other vegetation to remain or to be relocated have been flagged and that protection zones have been identified and enclosed according to requirements in Section 015639 "Temporary Tree and Plant Protection."

C. Protect existing site improvements to remain from damage during construction.

1. Restore damaged improvements to their original condition, as acceptable to Owner.

3.2 TEMPORARY EROSION AND SEDIMENTATION CONTROL

A. Provide temporary erosion- and sedimentation-control measures to prevent soil erosion and discharge of soil-bearing water runoff or airborne dust to adjacent properties and walkways, according to erosion- and sedimentation-control Drawings and requirements of authorities having jurisdiction.

B. Verify that flows of water redirected from construction areas or generated by construction activity do not enter or cross protection zones.

C. Inspect, maintain, and repair erosion- and sedimentation-control measures during construction until permanent vegetation has been established.

D. Remove erosion and sedimentation controls, and restore and stabilize areas disturbed during removal.

NOT FOR BID

3.3 TREE AND PLANT PROTECTION

A. Protect trees and plants remaining on-site according to requirements shown on the Plans and as require by the DNREC Delaware Erosion & Sediment Control Handbook, current edition.

B. Repair or replace trees, shrubs, and other vegetation indicated to remain or be relocated that are damaged by construction operations according to direction of the Owner.

3.4 EXISTING UTILITIES

A. Locate, identify, disconnect, and seal or cap utilities indicated to be removed or abandoned in place.

1. Arrange with utility companies to shut off indicated utilities.

B. Interrupting Existing Utilities: Do not interrupt utilities serving facilities occupied by Owner or others, unless permitted under the following conditions and then only after arranging to provide temporary utility services according to requirements indicated:

1. Notify Architect not less than two days in advance of proposed utility interruptions.
2. Do not proceed with utility interruptions without Architect's written permission.

C. Removal of underground utilities is included in earthwork sections; in applicable fire suppression, plumbing, HVAC, electrical, communications, electronic safety and security, and utilities sections; and in Section 024119 "Selective Demolition."

3.5 CLEARING AND GRUBBING

A. Remove obstructions, trees, shrubs, and other vegetation to permit installation of new construction.

1. Unless noted otherwise, grind down stumps and remove roots larger than 3 inches in diameter, obstructions, and debris to a depth of 18 inches below exposed subgrade.
2. Use only hand methods or air spade for grubbing within protection zones.

B. Fill depressions caused by clearing and grubbing operations with satisfactory soil material unless further excavation or earthwork is indicated.

1. Place fill material in horizontal layers not exceeding a loose depth of 8 inches, and compact each layer to a density equal to adjacent original ground.

3.6 TOPSOIL STRIPPING

A. Remove sod and grass before stripping topsoil.

NOT FOR BID

B. Strip topsoil to depth of 6 inches in a manner to prevent intermingling with underlying subsoil or other waste materials.

C. Stockpile topsoil away from edge of excavations without intermixing with subsoil or other materials. Grade and shape stockpiles to drain surface water. Cover to prevent windblown dust and erosion by water.

3.7 SITE IMPROVEMENTS

A. Remove existing above- and below-grade improvements as indicated and necessary to facilitate new construction.

3.8 DISPOSAL OF SURPLUS AND WASTE MATERIALS

A. Remove surplus soil material, unsuitable topsoil, obstructions, demolished materials, and waste materials including trash and debris, and legally dispose of them off Owner's property.

B. Separate recyclable materials produced during site clearing from other nonrecyclable materials. Store or stockpile without intermixing with other materials, and transport them to recycling facilities. Do not interfere with other Project work.

END OF SECTION 311000

NOT FOR BID

NOT FOR BID

SECTION 312000 - EARTH MOVING

PART 1 - GENERAL

1.1 SUMMARY

A. Section Includes:

1. Excavating and filling for rough grading the Site.
2. Excavating and backfilling for buildings and structures.
3. Drainage course for concrete slabs-on-grade.
4. Excavating and backfilling trenches for utilities and pits for buried utility structures.

B. Related Requirements:

1. Section 312319 "Dewatering" for lowering and disposing of ground water during construction.

1.2 DEFINITIONS

A. Backfill: Soil material used to fill an excavation.

1. Initial Backfill: Backfill placed beside and over pipe in a trench, including haunches to support sides of pipe.
2. Final Backfill: Backfill placed over initial backfill to fill a trench.

B. Base Course: Aggregate layer placed between the subbase course and hot-mix asphalt paving.

C. Bedding Course: Aggregate layer placed over the excavated subgrade in a trench before laying pipe.

D. Borrow Soil: Satisfactory soil imported from off-site for use as fill or backfill.

E. Drainage Course: Aggregate layer supporting the slab-on-grade that also minimizes upward capillary flow of pore water.

F. Excavation: Removal of material encountered above subgrade elevations and to lines and dimensions indicated.

1. Authorized Additional Excavation: Excavation below subgrade elevations or beyond indicated lines and dimensions as directed by Engineer. Authorized additional excavation and replacement material will be paid for according to Contract provisions for changes in the Work.

2. Unauthorized Excavation: Excavation below subgrade elevations or beyond indicated lines and dimensions without direction by Engineer. Unauthorized excavation, as well as remedial work directed by Engineer, shall be without additional compensation.

G. Fill: Soil materials used to raise existing grades.

H. Structures: Buildings, footings, foundations, retaining walls, slabs, tanks, curbs, mechanical and electrical appurtenances, or other man-made stationary features constructed above or below the ground surface.

I. Subbase Course: Aggregate layer placed between the subgrade and base course for hot-mix asphalt pavement, or aggregate layer placed between the subgrade and a cement concrete pavement or a cement concrete or hot-mix asphalt walk.

J. Subgrade: Uppermost surface of an excavation or the top surface of a fill or backfill immediately below subbase, drainage fill, drainage course, or topsoil materials.

K. Utilities: On-site underground pipes, conduits, ducts, and cables as well as underground services within buildings.

NOT FOR BID

1.3 PREINSTALLATION MEETINGS

A. Preinstallation Conference: Conduct pre-excavation conference at Project site.

1.4 INFORMATIONAL SUBMITTALS

A. Material test reports.

1.5 FIELD CONDITIONS

A. Utility Locator Service: Notify utility locator service for area where Project is located before beginning earth-moving operations.

B. Do not commence earth-moving operations until plant-protection measures specified in Section 015639 "Temporary Tree and Plant Protection" are in place.

PART 2 - PRODUCTS

2.1 SOIL MATERIALS

A. General: Provide borrow soil materials when sufficient satisfactory soil materials are not available from excavations.

B. Satisfactory Soils: Soil Classification Groups GW, GP, GM, SW, SP, and SM according to ASTM D 2487, or Groups A-1, A-2-4, A-2-5, and A-3 according to AASHTO M 145, or a combination of these groups; free of rock or gravel larger than 2 inches in any dimension, debris, waste, frozen materials, vegetation, and other deleterious matter.

C. Unsatisfactory Soils: Soil Classification Groups GC, SC, CL, ML, OL, CH, MH, OH, and PT according to ASTM D 2487, or Groups A-2-6, A-2-7, A-4, A-5, A-6, and A-7 according to AASHTO M 145, or a combination of these groups.

1. Unsatisfactory soils also include satisfactory soils not maintained within 2 percent of optimum moisture content at time of compaction.

D. Subbase Material: Naturally or artificially graded mixture of natural or crushed gravel, crushed stone, and natural or crushed sand; ASTM D 2940/D 2940M; with at least 90 percent passing a 1-1/2-inch sieve and not more than 12 percent passing a No. 200 sieve.

E. Base Course: Naturally or artificially graded mixture of natural or crushed gravel, crushed stone, and natural or crushed sand; ASTM D 294/D 2940M 0; with at least 95 percent passing a 1-1/2-inch sieve and not more than 8 percent passing a No. 200 sieve.

F. Engineered Fill: Naturally or artificially graded mixture of natural or crushed gravel, crushed stone, and natural or crushed sand; ASTM D 2940/D 2940M; with at least 90 percent passing a 1-1/2-inch sieve and not more than 12 percent passing a No. 200 sieve.

G. Bedding Course: Naturally or artificially graded mixture of natural or crushed gravel, crushed stone, and natural or crushed sand; ASTM D 2940/D 2940M; except with 100 percent passing a 1-inch sieve and not more than 8 percent passing a No. 200 sieve.

H. Drainage Course: Narrowly graded mixture of washed crushed stone, or crushed or uncrushed gravel; ASTM D 448; coarse-aggregate grading Size 57; with 100 percent passing a 1-1/2-inch sieve and zero to 5 percent passing a No. 8 sieve.

2.2 ACCESSORIES

A. Warning Tape: Acid- and alkali-resistant, polyethylene film warning tape manufactured for marking and identifying underground utilities, 6 inches wide and 4 mils thick, continuously inscribed with a description of the utility; colored to comply with local practice or requirements of authorities having jurisdiction.

1. Red: Electric.
2. Yellow: Gas, oil, steam and dangerous materials.
3. Orange: Telephone and other communications.
4. Blue: Water systems.
5. Green: Sewer systems.

NOT FOR BID

B. Detectable Warning Tape: Acid- and alkali-resistant, polyethylene film warning tape manufactured for marking and identifying underground utilities, a minimum of 6 inches wide and 4 mils thick, continuously inscribed with a description of the utility, with metallic core encased in a protective jacket for corrosion protection, detectable by metal detector when tape is buried up to 30 inches deep; colored to comply with local practice or requirements of authorities having jurisdiction.

1. Red: Electric.
2. Yellow: Gas, oil, steam and dangerous materials.
3. Orange: Telephone and other communications.
4. Blue: Water systems.
5. Green: Sewer systems.

NOT FOR BID

PART 3 - EXECUTION

3.1 PREPARATION

A. Protect structures, utilities, sidewalks, pavements, and other facilities from damage caused by settlement, lateral movement, undermining, washout, and other hazards created by earth-moving operations.

B. Protect and maintain erosion and sedimentation controls during earth-moving operations.

C. Protect subgrades and foundation soils from freezing temperatures and frost. Remove temporary protection before placing subsequent materials.

3.2 DEWATERING

A. Prevent surface water and ground water from entering excavations, from ponding on prepared subgrades, and from flooding Project site and surrounding areas.

B. Protect subgrades from softening, undermining, washout, and damage by rain or water accumulation.
   1. Reroute surface water runoff away from excavated areas. Do not allow water to accumulate in excavations. Do not use excavated trenches as temporary drainage ditches.

3.3 EXCAVATION, GENERAL

A. Unclassified Excavation: Excavate to subgrade elevations regardless of the character of surface and subsurface conditions encountered. Unclassified excavated materials may include rock, soil materials, and obstructions. No changes in the Contract Sum or the Contract Time will be authorized for rock excavation or removal of obstructions.

1. If excavated materials intended for fill and backfill include unsatisfactory soil materials and rock, replace with satisfactory soil materials.

NOT FOR BID

3.4 EXCAVATION FOR STRUCTURES

A. Excavate to indicated elevations and dimensions within a tolerance of plus or minus 1 inch. If applicable, extend excavations a sufficient distance from structures for placing and removing concrete formwork, for installing services and other construction, and for inspections.

1. Excavations for Footings and Foundations: Do not disturb bottom of excavation. Excavate by hand to final grade just before placing concrete reinforcement. Trim bottoms to required lines and grades to leave solid base to receive other work.
2. Pile Foundations: Stop excavations 6 to 12 inches above bottom of pile cap before piles are placed. After piles have been driven, remove loose and displaced material. Excavate to final grade, leaving solid base to receive concrete pile caps.
3. Excavation for Underground Tanks, Basins, and Mechanical or Electrical Utility Structures: Excavate to elevations and dimensions indicated within a tolerance of plus or minus 1 inch. Do not disturb bottom of excavations intended as bearing surfaces.

B. Excavations at Edges of Tree- and Plant-Protection Zones:

1. Excavate by hand or with an air spade to indicated lines, cross sections, elevations, and subgrades. If excavating by hand, use narrow-tine spading forks to comb soil and expose roots. Do not break, tear, or chop exposed roots. Do not use mechanical equipment that rips, tears, or pulls roots.
2. Cut and protect roots according to requirements in Section 015639 "Temporary Tree and Plant Protection."

3.5 EXCAVATION FOR WALKS AND PAVEMENTS

A. Excavate surfaces under walks and pavements to indicated lines, cross sections, elevations, and subgrades.

3.6 EXCAVATION FOR UTILITY TRENCHES

A. Excavate trenches to indicated gradients, lines, depths, and elevations.

1. Beyond building perimeter, excavate trenches to allow installation of top of pipe below frost line.

B. Excavate trenches to uniform widths to provide the following clearance on each side of pipe or conduit. Excavate trench walls vertically from trench bottom to 12 inches higher than top of pipe or conduit unless otherwise indicated.

1. Clearance: 12 inches each side of pipe or conduit.

C. Trench Bottoms: Excavate and shape trench bottoms to provide uniform bearing and support of pipes and conduit. Shape subgrade to provide continuous support for bells, joints, and barrels of pipes and for joints, fittings, and bodies of conduits. Remove projecting stones and sharp objects along trench subgrade.

1. For pipes and conduit less than 6 inches in nominal diameter, hand-excavate trench bottoms and support pipe and conduit on an undisturbed subgrade.

2. For pipes and conduit 6 inches or larger in nominal diameter, shape bottom of trench to support bottom 90 degrees of pipe or conduit circumference. Fill depressions with tamped sand backfill.

3. For flat-bottomed, multiple-duct conduit units, hand-excavate trench bottoms and support conduit on an undisturbed subgrade.

4. Excavate trenches 6 inches deeper than elevation required in rock or other unyielding bearing material to allow for bedding course.

D. Trenches in Tree- and Plant-Protection Zones:

1. Hand-excavate to indicated lines, cross sections, elevations, and subgrades. Use narrow-tine spading forks to comb soil and expose roots. Do not break, tear, or chop exposed roots. Do not use mechanical equipment that rips, tears, or pulls roots.
2. Do not cut main lateral roots or taproots; cut only smaller roots that interfere with installation of utilities.
3. Cut and protect roots according to requirements in Section 015639 "Temporary Tree and Plant Protection."

3.7 SUBGRADE INSPECTION

A. Compact all subgrade locations with a pneumatic tamper. Do not tamp wet or saturated subgrades.

B. Reconstruct subgrades damaged by freezing temperatures, frost, rain, accumulated water, or construction activities, as directed by Engineer, without additional compensation.

3.8 UNAUTHORIZED EXCAVATION

A. Fill unauthorized excavation under foundations or wall footings by extending bottom elevation of concrete foundation or footing to excavation bottom, without altering top elevation. Lean concrete fill, with 28-day compressive strength of 2500 psi, may be used when approved by Engineer.

NOT FOR BID

1. Fill unauthorized excavations under other construction, pipe, or conduit as directed by Engineer.

3.9 STORAGE OF SOIL MATERIALS

A. Stockpile borrow soil materials and excavated satisfactory soil materials without intermixing. Place, grade, and shape stockpiles to drain surface water. Cover to prevent windblown dust.

1. Stockpile soil materials away from edge of excavations. Do not store within drip line of remaining trees.

3.10 UTILITY TRENCH BACKFILL

A. Place backfill on subgrades free of mud, frost, snow, or ice.

B. Place and compact bedding course on trench bottoms and where indicated. Shape bedding course to provide continuous support for bells, joints, and barrels of pipes and for joints, fittings, and bodies of conduits.

C. Trenches under Footings: Backfill trenches excavated under footings and within 18 inches of bottom of footings with satisfactory soil; fill with concrete to elevation of bottom of footings. Concrete is specified in Section 033000 "Cast-in-Place Concrete."

D. Initial Backfill: Place and compact initial backfill of subbase material, free of particles larger than 1 inch in any dimension, to a height of 12 inches over the pipe or conduit.

1. Carefully compact initial backfill under pipe haunches and compact evenly up on both sides and along the full length of piping or conduit to avoid damage or displacement of piping or conduit. Coordinate backfilling with utilities testing.

E. Final Backfill: Place and compact final backfill of satisfactory soil to final subgrade elevation.

F. Warning Tape: Install warning tape directly above utilities, 16 inches below finished grade, for water and sewer. See Plan details for depth of electric line warning tape.

3.11 SOIL FILL

A. Plow, scarify, bench, or break up sloped surfaces steeper than 1 vertical to 4 horizontal so fill material will bond with existing material.

B. Place and compact fill material in layers to required elevations as follows:

1. Under grass and planted areas, use satisfactory soil material.
2. Under walks and pavements, use satisfactory soil material.

NOT FOR BID

3. Under steps and ramps, use engineered fill.
4. Under building slabs, use engineered fill.
5. Under footings and foundations, use engineered fill.

NOT FOR BID

3.12 SOIL MOISTURE CONTROL

A. Uniformly moisten or aerate subgrade and each subsequent fill or backfill soil layer before compaction to within 2 percent of optimum moisture content.

1. Do not place backfill or fill soil material on surfaces that are muddy, frozen, or contain frost or ice.
2. Remove and replace, or scarify and air dry, otherwise satisfactory soil material that exceeds optimum moisture content by 2 percent and is too wet to compact to specified dry unit weight.

3.13 COMPACTION OF SOIL BACKFILLS AND FILLS

A. Place backfill and fill soil materials in layers not more than 8 inches in loose depth for material compacted by heavy compaction equipment and not more than 4 inches in loose depth for material compacted by hand-operated tampers.

B. Place backfill and fill soil materials evenly on all sides of structures to required elevations and uniformly along the full length of each structure.

C. Compact soil materials to not less than the following percentages of maximum dry unit weight according to ASTM D 698:

1. Under structures, building slabs, steps, and pavements, scarify and recompact top 12 inches of existing subgrade and each layer of backfill or fill soil material at 95 percent.
2. Under walkways, scarify and recompact top 6 inches below subgrade and compact each layer of backfill or fill soil material at 92 percent.
3. Under turf or unpaved areas, scarify and recompact top 6 inches below subgrade and compact each layer of backfill or fill soil material at 85 percent.
4. For utility trenches, compact each layer of initial and final backfill soil material at 85 percent.

3.14 GRADING

A. General: Uniformly grade areas to a smooth surface, free of irregular surface changes. Comply with compaction requirements and grade to cross sections, lines, and elevations indicated.

B. Site Rough Grading: Slope grades to direct water away from buildings and to prevent ponding. Finish subgrades to elevations required to achieve indicated finish elevations, within the following subgrade tolerances:

1. Turf or Unpaved Areas: Plus or minus 1 inch.
2. Walks: Plus or minus 1 inch.
3. Pavements: Plus or minus 1/2 inch.

NOT FOR BID

3.15 SUBBASE AND BASE COURSES UNDER PAVEMENTS AND WALKS

A. Place subbase course and base course on subgrades free of mud, frost, snow, or ice.

B. On prepared subgrade, place subbase course and base course under pavements and walks as follows:

1. Shape subbase course and base course to required crown elevations and cross-slope grades.
2. Place subbase course and base course that exceeds 6 inches in compacted thickness in layers of equal thickness, with no compacted layer more than 6 inches thick or less than 3 inches thick.
3. Compact subbase course and base course at optimum moisture content to required grades, lines, cross sections, and thickness to not less than 95 percent of maximum dry unit weight according to ASTM D 698.

3.16 DRAINAGE COURSE UNDER CONCRETE SLABS-ON-GRADE

A. Place drainage course on subgrades free of mud, frost, snow, or ice.

B. On prepared subgrade, place and compact drainage course under cast-in-place concrete slabs-on-grade as follows:

1. Place drainage course that exceeds 6 inches in compacted thickness in layers of equal thickness, with no compacted layer more than 6 inches thick or less than 3 inches thick.
2. Compact each layer of drainage course to required cross sections and thicknesses to not less than 95 percent of maximum dry unit weight according to ASTM D 698.

3.17 FIELD QUALITY CONTROL

A. Special Inspections: Owner will engage a qualified special inspector to perform inspections:

B. Testing Agency: Owner will engage a qualified geotechnical engineering testing agency to perform tests and inspections.

C. Allow testing agency to inspect and test subgrades and each fill or backfill layer. Proceed with subsequent earth moving only after test results for previously completed work comply with requirements.

D. Footing Subgrade: At footing subgrades, at least one test of each soil stratum will be performed to verify design bearing capacities. Subsequent verification and approval of other footing

subgrades may be based on a visual comparison of subgrade with tested subgrade when approved by Engineer.

E. When testing agency reports that subgrades, fills, or backfills have not achieved degree of compaction specified, scarify and moisten or aerate, or remove and replace soil materials to depth required; recompact and retest until specified compaction is obtained.

3.18 PROTECTION

A. Protecting Graded Areas: Protect newly graded areas from traffic, freezing, and erosion. Keep free of trash and debris.

B. Repair and reestablish grades to specified tolerances where completed or partially completed surfaces become eroded, rutted, settled, or where they lose compaction due to subsequent construction operations or weather conditions.

C. Where settling occurs before Project correction period elapses, remove finished surfacing, backfill with additional soil material, compact, and reconstruct surfacing.

1. Restore appearance, quality, and condition of finished surfacing to match adjacent work, and eliminate evidence of restoration to greatest extent possible.

3.19 DISPOSAL OF SURPLUS AND WASTE MATERIALS

A. Remove surplus satisfactory soil and waste materials, including unsatisfactory soil, trash, and debris, and legally dispose of them off Owner's property.

END OF SECTION 312000

NOT FOR BID

NOT FOR BID

SECTION 329200 - TURF AND GRASSES

PART 1 - GENERAL

1.1 SUMMARY

A. Section Includes:

1. Seeding.
2. Sodding.

1.2 DEFINITIONS

A. Pesticide: A substance or mixture intended for preventing, destroying, repelling, or mitigating a pest. This includes insecticides, miticides, herbicides, fungicides, rodenticides, and molluscicides. It also includes substances or mixtures intended for use as a plant regulator, defoliant, or desiccant.

B. Planting Soil: Existing, on-site soil; imported soil; or manufactured soil that has been modified with soil amendments and perhaps fertilizers to produce a soil mixture best for plant growth. See Section 329113 "Soil Preparation" and drawing designations for planting soils.

1.3 PREINSTALLATION MEETINGS

A. Preinstallation Conference: Conduct conference at Project site.

1.4 INFORMATIONAL SUBMITTALS

A. Certification of grass seed.

1. Certification of each seed mixture for turfgrass sod.

B. Product certificates.

1.5 QUALITY ASSURANCE

A. Installer Qualifications: A qualified landscape Installer whose work has resulted in successful sod establishment.

1. Installer's Field Supervision: Require Installer to maintain an experienced full-time supervisor on Project site when work is in progress.

2. Personnel Certifications: Installer's field supervisor shall have certification in one of the following categories from the Professional Landcare Network:

   a. Landscape Industry Certified Technician - Exterior.
   b. Landscape Industry Certified Lawncare Manager.
   c. Landscape Industry Certified Lawncare Technician.

3. Pesticide Applicator: State licensed, commercial.

NOT FOR BID

1.6 DELIVERY, STORAGE, AND HANDLING

A. Seed and Other Packaged Materials: Deliver packaged materials in original, unopened containers showing weight, certified analysis, name and address of manufacturer, and indication of compliance with state and Federal laws as applicable.

B. Sod: Harvest, deliver, store, and handle sod according to requirements in "Specifications for Turfgrass Sod Materials" and "Specifications for Turfgrass Sod Transplanting and Installation" sections in TPI's "Guideline Specifications to Turfgrass Sodding." Deliver sod within 24 hours of harvesting and in time for planting promptly. Protect sod from breakage and drying.

PART 2 - PRODUCTS

2.1 SEED

A. Grass Seed: Fresh, clean, dry, new-crop seed complying with AOSA's "Rules for Testing Seeds" for purity and germination tolerances.

B. Seed Species:

   1. Quality: State-certified seed of grass species as noted on the Plans.

2.2 TURFGRASS SOD

A. Turfgrass Sod: Number 1 Quality/Premium, including limitations on thatch, weeds, diseases, nematodes, and insects, complying with "Specifications for Turfgrass Sod Materials" in TPI's "Guideline Specifications to Turfgrass Sodding." Furnish viable sod of uniform density, color, and texture that is strongly rooted and capable of vigorous growth and development when planted.

2.3 FERTILIZERS

A. Commercial Fertilizer: Commercial-grade complete fertilizer of neutral character, consisting of fast- and slow-release nitrogen, 50 percent derived from natural organic sources of urea formaldehyde, phosphorous, and potassium in the following composition:

1. Composition: 1 lb/1000 sq. ft. of actual nitrogen, 4 percent phosphorous, and 2 percent potassium, by weight.

B. Slow-Release Fertilizer: Granular or pelleted fertilizer consisting of 50 percent water-insoluble nitrogen, phosphorus, and potassium in the following compositions:

1. Composition: 20 percent nitrogen, 10 percent phosphorous, and 10 percent potassium, by weight.

NOT FOR BID

2.4 MULCHES

A. Straw Mulch: Provide air-dry, clean, mildew and seed-free, salt hay or threshed straw of wheat, rye, oats, or barley.

B. Sphagnum Peat Mulch: Partially decomposed sphagnum peat moss, finely divided or of granular texture, and with a pH range of 3.4 to 4.8.

C. Muck Peat Mulch: Partially decomposed moss peat, native peat, or reed-sedge peat, finely divided or of granular texture, with a pH range of 6 to 7.5, and having a water-absorbing capacity of 1100 to 2000 percent, and containing no sand.

D. Compost Mulch: Well-composted, stable, and weed-free organic matter, pH range of 5.5 to 8; moisture content 35 to 55 percent by weight; 100 percent passing through 1-inch sieve; soluble salt content of 2 to 5 decisiemens/m; not exceeding 0.5 percent inert contaminants and free of substances toxic to plantings; and as follows:

2.5 PESTICIDES

A. General: Pesticide, registered and approved by the EPA, acceptable to authorities having jurisdiction, and of type recommended by manufacturer for each specific problem and as required for Project conditions and application. Do not use restricted pesticides unless authorized in writing by authorities having jurisdiction.

PART 3 - EXECUTION

3.1 TURF AREA PREPARATION

A. General: Prepare planting area for soil placement and mix planting soil according to Section 329113 "Soil Preparation."

B. Reduce elevation of planting soil to allow for soil thickness of sod.

C. Moisten prepared area before planting if soil is dry. Water thoroughly and allow surface to dry before planting. Do not create muddy soil.

D. Before planting, obtain Architect's acceptance of finish grading; restore planting areas if eroded or otherwise disturbed after finish grading.

3.2 SEEDING

A. Sow seed with spreader or seeding machine. Do not broadcast or drop seed when wind velocity exceeds 5 mph.

1. Evenly distribute seed by sowing equal quantities in two directions at right angles to each other.
2. Do not use wet seed or seed that is moldy or otherwise damaged.
3. Do not seed against existing trees. Limit extent of seed to outside edge of planting saucer.

B. Sow seed at a total rate as shown on Erosion and Sediment Control Details

C. Rake seed lightly into top 1/2 inch of soil, roll lightly, and water with fine spray.

D. Protect seeded areas with slopes not exceeding 1:6 by spreading straw mulch. Spread uniformly at a minimum rate as shown on Erosion and Sediment Control Details to form a continuous blanket in loose thickness over seeded areas.

1. Anchor straw mulch by crimping into soil with suitable mechanical equipment.

3.3 SODDING

A. Lay sod within 24 hours of harvesting. Do not lay sod if dormant or if ground is frozen or muddy.

B. Lay sod to form a solid mass with tightly fitted joints. Butt ends and sides of sod; do not stretch or overlap. Stagger sod strips or pads to offset joints in adjacent courses. Avoid damage to soil or sod during installation. Tamp and roll lightly to ensure contact with soil, eliminate air pockets, and form a smooth surface. Work sifted soil or fine sand into minor cracks between pieces of sod; remove excess to avoid smothering sod and adjacent grass.

1. Lay sod across slopes exceeding 1:3.
2. Anchor sod on slopes exceeding 1:6 with wood pegs or steel staples spaced as recommended by sod manufacturer but not less than two anchors per sod strip to prevent slippage.

C. Saturate sod with fine water spray within two hours of planting. During first week after planting, water daily or more frequently as necessary to maintain moist soil to a minimum depth of 1-1/2 inches below sod.

NOT FOR BID

3.4 TURF MAINTENANCE

A. General: Maintain and establish turf by watering, fertilizing, weeding, mowing, trimming, replanting, and performing other operations as required to establish healthy, viable turf. Roll, regrade, and replant bare or eroded areas and remulch to produce a uniformly smooth turf. Provide materials and installation the same as those used in the original installation.

B. Mow turf as soon as top growth is tall enough to cut. Repeat mowing to maintain specified height without cutting more than one-third of grass height. Remove no more than one-third of grass-leaf growth in initial or subsequent mowings.

3.5 SATISFACTORY TURF

A. Turf installations shall meet the following criteria as determined by Architect:

1. Satisfactory Seeded Turf: At end of maintenance period, a healthy, uniform, close stand of grass has been established, free of weeds and surface irregularities, with coverage meeting the requirements of the Erosion and Sediment Control Details.
2. Satisfactory Sodded Turf: At end of maintenance period, a healthy, well-rooted, even-colored, viable turf has been established, free of weeds, open joints, bare areas, and surface irregularities.

B. Use specified materials to reestablish turf that does not comply with requirements, and continue maintenance until turf is satisfactory.

END OF SECTION 329200

NOT FOR BID

(THIS PAGE INTENTIONALLY LEFT BLANK)

NOT FOR BID

401002 – BITUMINOUS CONCRETE, SUPERPAVE, TYPE C, 160 GYRATIONS, PG 64-22 (CARBONATE STONE)
401011 – BITUMINOUS CONCRETE, SUPERPAVE, TYPE B, 160 GYRATIONS, PG 64-22

NOT FOR BID

Description:

This specification utilizes DelDOT Standard Specifications.

Warm mix asphalt (WMA) is the generic term used to describe the reduction in production, paving, and compaction temperatures achieved through the application of one or more WMA technologies.

WMA may be produced by one or a combination of several technologies involving asphalt foaming processes and equipment or additives that facilitate the reduction of the temperature at which the mix can be placed and satisfactorily compacted thereby permitting the mix to be produced at reduced temperatures from a comparable mix without the Warm Mix Technology.

The following Subsections of the Standard Specifications shall be applicable: 401.01, 401.03 - 401.10, 401.12, and 401.13. All other subsections have been modified herein.

Materials:

If the Contractor proposes to use a combination of materials that are not covered by this Specification, the mix design shall be submitted and reviewed by the Engineer 30 calendar days prior to use.

Conform to the requirements of Subsections 823.01, 823.05- 823.17, and 823.25 - 823.28 of the Standard Specifications and the following for bituminous materials:

Asphalt Binder:

The asphalt binder shall meet the requirements of Superpave performance-grade asphalt binder, as referenced in the Plans, according to M 320 [1], Table 1 and tested according to AASHTO R29 with the following test ranges:

TEST PROCEDURE	AASHTO REFERENCE	SPECIFICATION LIMITS
Temperature, °C	M 320	Per Grade
Original DSR, G*/sin (δ)	T 315	1.00 - 2.20 kPa
RTFO DSR, G*/sin (δ)	T 315	>/= 2.20 kPa
PAV DSR, G* sin (δ)	T 315	</=5000 kPa
BBR Creep Stiffness, *S*	T 313	</= 300.0 kPa

TEST PROCEDURE	AASHTO REFERENCE	SPECIFICATION LIMITS
BBR *m*-value	T 313	>/=0.300

Note 1: The exception to M 320 is that the original DSR shall be 1.00 to 2.20 kPa

Substitution of a higher temperature grade will require prior approval by the Engineer.

The highest low temperature grade virgin binder to be used is -22.

Depending on the level of RAP used, the low temperature properties, per T 313, may be different than stated in M 320 or the previous table.

Recycled Materials:

The percentage allowance of recycled asphalt pavement shall be controlled through the use of the Materials & Research recycled mixture program available through the Materials & Research Section. The program can be used by the contractor to determine which materials and combinations of materials can be used to meet the specified material on the contract.

No recycled asphalt shingles shall be used in WMA.

Mineral Aggregate:

Conform to Section 805 and the following criteria. These criteria apply to the combined aggregate blend.

DESIGN ESAL'S (MILLIONS)	COARSE AGGREGATE ANGULARITY[1] (% MIN)		FINE AGGREGATE ANGULARITY[2] (% MIN)		CLAY CONTENT[3] (% - MIN)	FLAT AND ELONGATED [4] (% - MAX)
	≤ 100 mm	> 100 mm	≤ 100 mm	> 100 mm		
< 0.3	55/-	-/-	-	-	40	-
0.3 to < 3	75/-	50/-	40	40	40	10
3 to <10	85/80[5]	60/-	45	40	45	
10 < 30	95/90	80/75	45	40	45	
≤30	100/100	100/100	45	45	50	

[1]Coarse Aggregate Angularity is tested according to D5821.
[2]Fine Aggregate Angularity is tested according to TP33.

NOT FOR BID

[3]Clay Content is tested according to T176.
[4]Flat and Elongated is tested according to D4791 with a 5:1 aspect ratio.
[5] 85/80 denotes that 85% of the coarse aggregate has one fractured face and 80% has two or more fractured faces.

The following source properties apply to the individual aggregates in the aggregate blend for the proposed JMF.

TEST METHOD	SPECIFICATION LIMITS
Toughness, T96 Percent Loss, Maximum	40
Soundness, T104 Percent Loss, Maximum for five cycles	20
Deleterious Materials, T112 Percent, Maximum	10
Moisture Sensitivity, T283 Percent, Minimum	80

NOT FOR BID

Supply all polish values to the Engineer upon request. The polish value of the composite aggregate blend for any roadway with a minimum average daily traffic volume (ADT) of 8000 vehicles and a posted speed of 35 mph (60 kph) or greater shall be greater than 8.0 when tested according to Maryland State Highway Administration 'MSMT 411 - Laboratory Method of Predicting Frictional Resistance of Polished Aggregates and Pavement Surfaces'. RAP shall be assigned a value of 4.0.

Mineral Filler:

Conform to M17.

Warm Mix Additives:

For any WMA technology requiring addition of any material by the producer during production, the following information will be submitted with the proposed JMF for review and approval at least 30 calendar days prior to production:

1. WMA technology and/or additive information.
2. WMA technology manufacturer's recommendation for usage.
3. WMA technology target dosage rate and tolerance envelope. Support tolerance envelope with test data demonstrating acceptable mix production properties conforming to all sections of this specification.
4. WMA technology manufacturer's material safety data sheets (MSDS).
5. Documentation of past WMA technology field application including points of contact.

6. Temperature ranges for mixing and compacting.
7. Laboratory test data, samples, and sources of all mix components, and asphalt binder viscosity-temperature relationships.

The contractor shall follow the manufacturer's recommendation for incorporating additives and WMA technologies into the mix. The contractor shall also comply with the manufacturer's recommendation regarding receiving, storage, and delivery of additives.

If the producer performs blending of the WMA technology in their tank, a separate Quality Control plan shall be submitted by the producer to the Department for review and approval at least 30 calendar days prior to production.

NOT FOR BID

Mixture Requirements:

Mix Design. Develop and submit a job mix formula for each mixture according to R35. Each mix design shall be capable of being produced, placed, and compacted as specified. Apply all mix design requirements for Superpave to the development of the WMA mix design.

Gradation: The FHWA Superpave 0.45 Power Chart shall be used to define permissible gradations for the specified mixture. Type C shall be either a No.4 (4.75 mm), 3/8" (9.5 mm), or 1/2" (12.5 mm) Nominal Maximum Aggregate Size Hot-Mix. Unless otherwise noted in the Plans, the Type C shall meet the 3/8" (9.5 mm) Nominal Maximum Aggregate Size. Type B Hot-Mix shall be the 3/4" (19.0 mm) Nominal Maximum Aggregate Size and the Bituminous Concrete Base Course (BCBC) shall be the 1" (25.0 mm) Nominal Maximum Aggregate Size. Target values for percent passing each standard sieve for the design aggregate structure shall comply with the Superpave control points and should avoid the restricted zone. Percentages shall be based on the washed gradation of the aggregate according to T11.

Thin WMA, Type C shall be a No. 4 (4.75 mm) Nominal Maximum Aggregate Size Only.

In addition to the results of the material requirements specified above, the following material properties shall be provided by the Contractor: bulk specific gravity G_{sb}, apparent specific gravity G_{sa}, and the absorption of the individual aggregate stockpiles to be used, tested according to T84 and T85 and reported to three decimal places along with the specific gravity of the mineral filler to be used, tested according to T100 and reported to three decimal places.

Superpave Gyratory Compactive (SGC) Effort:

The Superpave Gyratory Compaction effort employed throughout mixture design, field quality control, or field quality assurance shall be as indicated below. All mixture specimens tested in the SGC shall be compacted to N_{Max} Height data provided by the SGC shall be employed to calculate volumetric properties at $N_{INITIAL}$, N_{DEISGN}, and N_{MAX}

Superpave Gyratory Compactive (SGC) Effort:

DESIGN TRAFFIC LEVEL (MILLION ESAL'S)	$N_{INITIAL}$	N_{DESIGN}	N_{MAX}
0.3 to < 3	7	75	115
3 to < 30	8	100	160
≥30	9	125	205

NOT FOR BID

Volumetric Design Parameters. The design aggregate structure at the target asphalt cement content shall satisfy the volumetric criteria below:

DESIGN ESAL'S (MILLION)	REQUIRED DENSITY (% OF THEORETICAL MAXIMUM SPECIFIC GRAVITY)			VOIDS-IN-MINERAL AGGREGATE (% - MINIMUM) NOMINAL MAX. AGGREGATE (mm)					VOIDS FILLED WITH ASPHALT (% - MINIMUM)
	$N_{INITIAL}$	N_{DESIGN}	N_{MAX}	25.0	19.0	9.5	12.5	4.75	
0.3 to < 3	≥90.5	96.0	98.0	12.5	13.5	15.5	14.5	16.5	65.0 - 78.0
3 to < 10	≥ 89.0								65.0 - 75.0[1]
10 < 30									
≥ 30									

Air voids (V_a) at N_{design} shall be 4.0% for all ESAL designs. Air voids (V_a) at N_{max} shall be a minimum of 2.0% for all ESAL designs

The dust to effective binder ratio for the mix having aggregate gradations above the Primary Control Sieve (PCS) Control Points shall be 0.6-1.2. For aggregate gradations below the PCS Control Points, the dust to binder ratio shall be 0.8-1.6. For the No. 4 (4.75 mm) mix, the dust to binder ratio shall be 0.9-2.0 whether above or below the PCS Control Points.

For 3/8" (9.5 mm) Nominal Maximum Aggregate Size mixtures, the specified VFA range shall be 73.0% to 76.0% and for 4.75 mm Nominal Maximum Size mixtures, the range shall be 75 % to 78% for design traffic levels ≥3 million ESALs.

Gradation Control Points:

The combined aggregates shall conform to the gradation requirement specified in the following table when tested according to T11 and T27.

Nominal Maximum Aggregates Size Control Points, Percent Passing										
	25.0 mm		19.0 mm		12.5 mm		9.5 mm		4.75 mm	
SIEVE SIZE	MIN	MAX	MIN	MAX	MIN	MAX	MIN	MAX	MIN	MAX
37.5 mm	100	-	-	-	-	-	-	-	-	-
25.0 mm	90	100	100	-	-	-	-	-	-	-
19.0 mm	-	90	90	100	100	-	-	-	-	-
12.5 mm	-	-	-	90	90	100	100	-	100	-
9.5 mm	-	-	-	-	-	90	90	100	95	100
4.75 mm	-	-	-	-	-	-	-	90	90	100
2.36 mm	19	45	23	49	28	58	32	67	-	-
1.18 mm	-	-	-	-	-	-	-	-	30	60
0.075 mm	1	7	2	8	2	10	2	10	6	12

NOT FOR BID

Note: The aggregate gradation for each sieve must fall within the minimum and maximum limits.

Gradation Classification:

The Primary Control Sieve (PCS) defines the break point of fine and coarse mixtures. The combined aggregates shall be classified as coarse graded when it passes below the Primary Control Sieve (PCS) control point as defined below. All other gradations shall be classified as fine graded.

PCS CONTROL POINT FOR MIXTURE NOMINAL MAXIMUM AGGREGATES SIZE (% PASSING)					
Nominal maximum Aggregates Size	25.0 mm	19.0 mm	12.5 mm	9.5 mm	4.5 mm
Primary Control Sieve	4.75 mm	4.75 mm	2.36 mm	2.36 mm	1.18 mm
PCS Control Point	40	47	39	47	30-60

Plant Production Tolerances:

Volumeric Property	Superpave Criteria
Air Voids (V_a) at (%) N_{max} Air Voids (V_a) at N_{design} (%)	2.0 (min) 5.5 (max)
Voids in Mineral Aggregate (VMA) at N_{design}	

Volumeric Property	Superpave Criteria
25.0 mm Bituminous Concrete Base Course 19.0 mm Type B Hot-Mix 12.5 mm Type C Hot-Mix 9.5 mm Type C Hot-Mix 4.5 mm Type C Hot-Mix	[illegible].2 +[illegible].0

NOT FOR BID

Design Evaluation:

The contractor shall furnish a Job Mix Formula (JMF) for review and approval. The Engineer may elect to evaluate the proposed JMF and suitability of all materials. All materials requested by the Engineer shall be provided at the contractor's expense to the Central Laboratory in Dover in a timely manner upon request. To verify the complete mixture design and evaluate the suitability of all materials, the following approximate quantities are required:

5.25 gal (20 liters) of the asphalt binder;
0.13 gal (0.5 liters) sample of liquid heat-stable anti-strip additive;
254 lb. (115 kg) of each coarse aggregate;
154 lb. (70 kg) of each intermediate and fine aggregate;
22 lb. (10 kg) of mineral filler; and
254 lb. (115 kg) of RAP, when applicable.

The proposed JMF shall include the following:

Plot of the design aggregate structure on the FHWA Superpave 0.45 power chart showing the maximum density line, Superpave control points, and recommended restricted zone.

Plot of the three trial asphalt binder contents at ±0.5% gyratory compaction curves where the percent of maximum specific gravity (% of G_{mm}) is plotted against the log base ten of the number of gyrations (log (N)) showing the applicable criteria for $N_{initial}$, N_{design}, and $N_{max.}$

Plot of the percent asphalt binder by total weight of the mix (P_b) versus the following:

% of G_{mm} at N_{design}, VMA at N_{desgin}, VFA at N_{design}, Fines to effective asphalt binder (P_{be}) ratio, and unit weight (kg/m5) at both N_{design} and N_{max}.

Summary of the consensus property standards test results for the design aggregate structure, summary of the source property standards test results for the individual aggregates in the design aggregate structure, target value of the asphalt binder content, and a table of G_{mm} of the asphalt mixture for the four trial asphalt binder contents determined according to T209.

The JMF shall also include the NCAT Ignition Oven calibration for the specific materials utilized for this mix.

Construction:

Production Plants. The contractor shall modify and/or operate their production plant as required by the manufacturer to introduce the WMA technology.

Weather Limitations. Place mix only on dry, unfrozen surfaces and only when weather conditions allow for proper production, placement, handling, and compacting.

The minimum ambient temperature shall be 32 degrees F and rising.

The following table of ambient temperatures for various binder grades and lift thicknesses for placement with the following parameters:

-Minimum surface temperature of 32 degrees F
-Maximum production temperature of 275 degrees F
-Maximum wind speed of 8 miles per hour

Lift Thickness (in)	PG Binder		
	76-22	70-22	64-22
1.50	50F	45F	40F
2.00	40F	38F	35F
3.00	32F	32F	32F

NOT FOR BID

Construction outside of these conditions will be at the discretion of the Engineer.

Compaction:

Compaction shall be performed by multiple passes of a steel roller to the satisfaction of the Owner.

Method of Measurement and Basis of Payment:

The item shall be included in the lump sum price bid for the contract with no separate measurement made for the individual item, unless noted in the Plans.

END OF SECTION

NOT FOR BID

602003 – PCC MASONRY, ABUTMENT FOOTING, CLASS B
602015 – PCC MASONRY, ABUTMENT ABOVE FOOTING, CLASS A

Description of Work:

This specification utilizes DelDOT Standard Specifications.

The item shall consist of furnishing and installing all necessary materials, concrete, bar reinforcement, excavation and backfill, dewatering and incidentals needed for constructing portland cement concrete bridge abutments as shown and noted on the plans and specifications. Excavation and dewatering which are necessary for construction of portland cement concrete masonry subfoundation shall be included with work under this item.

Materials and Construction Methods:

Concrete:

All materials used in the production of portland cement concrete (P.C.C.) bridge abutments shall conform to the applicable requirements of Section 812 of the Standard Specifications for Class A and/or Class B concrete as specified on the plans. Bar reinforcement as shown on the plans, shall conform to the requirements of Section 603 or 604 as applicable. All applicable requirements of Section 602 of the Standard Specifications shall be in effect.

Excavation and Backfill:

Excavation and backfill for P.C.C. Bridge Abutments shall be performed in accordance with Section 207 of the Standard Specifications.

Quality Control Testing During Construction:

Contractor shall employ and pay for services of an Independent Testing Laboratory to perform tests in accordance with the most recent test methods of AASHTO, or ASTM in effect on the date of advertisement for bid proposals:

a. Slump: One test at point of discharge for each concrete truck delivery.
b. Compression Test Specimen: One set of four standard cylinders for each compressive-strength test.
c. Compressive-Strength Tests: One set for each concrete truck delivery; one specimen tested at 7 days, two specimens tested at 28 days, and one specimen retained in reserve for later testing if required.
d. Test results will be reported in writing to Engineer within 24 hours after tests.

Method of Measurement and Basis of Payment:

The item shall be included in the lump sum price bid for the contract with no separate measurement made for the individual item including but not limited to furnishing and placing all materials required, concrete, bar reinforcement, excavation, backfill and backfilling, dewatering, finishing concrete surfaces, all labor, tools, equipment and necessary incidentals to complete the work, and testing.

END OD SECTION 602003/602015

NOT FOR BID

NOT FOR BID

705007 – TRUNCATED DOMES

PART 1 – GENERAL

1.1 SUMMARY

A. This work consists of furnishing all materials and installing a detectable warning surface system that complies with the Americans with Disabilities Act (ADA) (1990) for outdoor facilities. The system shall be in accordance with these Special Provisions, the Plans, and the Standard Construction Details and as directed by the Engineer.

B. Related Sections: The following related sections contain requirements that relate to this Section.

1. Delaware Department of Transportation (DelDOT) Standard Specifications dated August 2001.

PART 2 – PRODUCTS

2.1 MATERIALS

A. The Contractor shall submit a sample of the proposed system to the Engineer for approval.

1. Precast concrete, or fired clay brick, paver units, each with the truncated dome pattern, set on the concrete sidewalk surface. For this application, the Contractor shall use mortar for adhesion to the sidewalk surface and for joint filling.

B. The Engineer will not approve stamping systems, metal plates or ceramic tiles.

C. The Contractor shall certify that the surface of the system is slip resistant. The Contractor shall submit test results for the system when it has been tested using one of the following standard methods:

1. ASTM C-1028 – Determining the Static Coefficient of Friction of Ceramic Tile and Other Like Surfaces by Horizontal Dynamometer Pull-Meter Method.

2. ASTM C-2047 – Static Coefficient of Friction of Polish-Coated Floor Surfaces as Measured by the James Machine.

3. ASTM D-5859 – Determining the Traction of Footwear on Painted Surfaces Using the Variable Incidence Tester.

4. ASTM E-303 – Measuring Surface Frictional Properties Using the British Pendulum Tester.

5. VOSI V41.21-98 – Universal Specification / Test Method for Slip Resistant Walkways, in the Field and Laboratory, as measured by a Drag Type Friction Tester (Voices of Safety International (VOSI).www.voiceofsafety.com)

D. The final surface of the system shall have a brick red color, unless specified otherwise on the Plans.

NOT FOR BID

PART 3 – EXECUTION

3.1 PLACEMENT

A. The full thickness of the sidewalk and base material under the system shall be constructed at the lower elevation to permit the installed paver units to be flush, and the full height of the truncated domes to be above, the adjacent sidewalk surfaces. Paver units shall be set in a bed of mortar and have mortared joints.

B. At the edges of the system, changes in grade up to 0.25 inch (6 mm) may be vertical. The Contractor shall bevel changes in grade between 0.25 and 0.50 inch (6 and 13 mm) with a slope no steeper than 2 to 1.

END OF SECTION 705520

NOT FOR BID

SECTION 311000 - SITE CLEARING

PART 1 - GENERAL

1.1 SUMMARY

A. Section Includes:

1. Protecting existing vegetation to remain.
2. Removing existing vegetation.
3. Clearing and grubbing.
4. Stripping and stockpiling topsoil.
5. Removing above- and below-grade site improvements.
6. Disconnecting, capping, or sealing site utilities.
7. Temporary erosion and sedimentation control.

1.2 PREINSTALLATION MEETINGS

A. Preinstallation Conference: Conduct conference at Project site.

1.3 MATERIAL OWNERSHIP

A. Except for materials indicated to be stockpiled or otherwise remain Owner's property, cleared materials shall become Contractor's property and shall be removed from Project site.

1.4 FIELD CONDITIONS

A. Traffic: Minimize interference with adjoining roads, streets, walks, and other adjacent occupied or used facilities during site-clearing operations.

1. Do not close or obstruct streets, walks, or other adjacent occupied or used facilities without permission from Owner and authorities having jurisdiction.
2. Provide alternate routes around closed or obstructed trafficways if required by Owner or authorities having jurisdiction.

B. Salvageable Improvements: Carefully remove items indicated to be salvaged and store on Owner's premises where indicated.

C. Utility Locator Service: Notify utility locator service for area where Project is located before site clearing.

D. Do not commence site clearing operations until temporary erosion- and sedimentation-control and plant-protection measures are in place.

E. Tree- and Plant-Protection Zones: Protect according to requirements shown on the Plans and as require by the DNREC Delaware Erosion & Sediment Control Handbook, current edition.

PART 2 - PRODUCTS

2.1 MATERIALS

A. Satisfactory Soil Material: Requirements for satisfactory soil material are specified in Section 312000 "Earth Moving."

1. Obtain approved borrow soil material off-site when satisfactory soil material is not available on-site.

PART 3 - EXECUTION

3.1 PREPARATION

A. Protect and maintain benchmarks and survey control points from disturbance during construction.

B. Verify that trees, shrubs, and other vegetation to remain or to be relocated have been flagged and that protection zones have been identified and enclosed according to requirements in Section 015639 "Temporary Tree and Plant Protection."

C. Protect existing site improvements to remain from damage during construction.

1. Restore damaged improvements to their original condition, as acceptable to Owner.

3.2 TEMPORARY EROSION AND SEDIMENTATION CONTROL

A. Provide temporary erosion- and sedimentation-control measures to prevent soil erosion and discharge of soil-bearing water runoff or airborne dust to adjacent properties and walkways, according to erosion- and sedimentation-control Drawings and requirements of authorities having jurisdiction.

B. Verify that flows of water redirected from construction areas or generated by construction activity do not enter or cross protection zones.

C. Inspect, maintain, and repair erosion- and sedimentation-control measures during construction until permanent vegetation has been established.

D. Remove erosion and sedimentation controls, and restore and stabilize areas disturbed during removal.

NOT FOR BID

3.3 TREE AND PLANT PROTECTION

A. Protect trees and plants remaining on-site according to requirements shown on the Plans and as require by the DNREC Delaware Erosion & Sediment Control Handbook, current edition.

B. Repair or replace trees, shrubs, and other vegetation indicated to remain or be relocated that are damaged by construction operations according to direction of the Owner.

3.4 EXISTING UTILITIES

A. Locate, identify, disconnect, and seal or cap utilities indicated to be removed or abandoned in place.

1. Arrange with utility companies to shut off indicated utilities.

B. Interrupting Existing Utilities: Do not interrupt utilities serving facilities occupied by Owner or others, unless permitted under the following conditions and then only after arranging to provide temporary utility services according to requirements indicated:

1. Notify Architect not less than two days in advance of proposed utility interruptions.
2. Do not proceed with utility interruptions without Architect's written permission.

C. Removal of underground utilities is included in earthwork sections; in applicable fire suppression, plumbing, HVAC, electrical, communications, electronic safety and security, and utilities sections; and in Section 024119 "Selective Demolition."

3.5 CLEARING AND GRUBBING

A. Remove obstructions, trees, shrubs, and other vegetation to permit installation of new construction.

1. Unless noted otherwise, grind down stumps and remove roots larger than 3 inches in diameter, obstructions, and debris to a depth of 18 inches below exposed subgrade.
2. Use only hand methods or air spade for grubbing within protection zones.

B. Fill depressions caused by clearing and grubbing operations with satisfactory soil material unless further excavation or earthwork is indicated.

1. Place fill material in horizontal layers not exceeding a loose depth of 8 inches, and compact each layer to a density equal to adjacent original ground.

3.6 TOPSOIL STRIPPING

A. Remove sod and grass before stripping topsoil.

NOT FOR BID

B. Strip topsoil to depth of 6 inches in a manner to prevent intermingling with underlying subsoil or other waste materials.

C. Stockpile topsoil away from edge of excavations without intermixing with subsoil or other materials. Grade and shape stockpiles to drain surface water. Cover to prevent windblown dust and erosion by water.

3.7 SITE IMPROVEMENTS

A. Remove existing above- and below-grade improvements as indicated and necessary to facilitate new construction.

3.8 DISPOSAL OF SURPLUS AND WASTE MATERIALS

A. Remove surplus soil material, unsuitable topsoil, obstructions, demolished materials, and waste materials including trash and debris, and legally dispose of them off Owner's property.

B. Separate recyclable materials produced during site clearing from other nonrecyclable materials. Store or stockpile without intermixing with other materials, and transport them to recycling facilities. Do not interfere with other Project work.

END OF SECTION 311000

NOT FOR BID

NOT FOR BID

SECTION 312000 - EARTH MOVING

PART 1 - GENERAL

1.1 SUMMARY

A. Section Includes:

1. Excavating and filling for rough grading the Site.
2. Excavating and backfilling for buildings and structures.
3. Drainage course for concrete slabs-on-grade.
4. Excavating and backfilling trenches for utilities and pits for buried utility structures.

B. Related Requirements:

1. Section 312319 "Dewatering" for lowering and disposing of ground water during construction.

1.2 DEFINITIONS

A. Backfill: Soil material used to fill an excavation.

1. Initial Backfill: Backfill placed beside and over pipe in a trench, including haunches to support sides of pipe.
2. Final Backfill: Backfill placed over initial backfill to fill a trench.

B. Base Course: Aggregate layer placed between the subbase course and hot-mix asphalt paving.

C. Bedding Course: Aggregate layer placed over the excavated subgrade in a trench before laying pipe.

D. Borrow Soil: Satisfactory soil imported from off-site for use as fill or backfill.

E. Drainage Course: Aggregate layer supporting the slab-on-grade that also minimizes upward capillary flow of pore water.

F. Excavation: Removal of material encountered above subgrade elevations and to lines and dimensions indicated.

1. Authorized Additional Excavation: Excavation below subgrade elevations or beyond indicated lines and dimensions as directed by Engineer. Authorized additional excavation and replacement material will be paid for according to Contract provisions for changes in the Work.

2. Unauthorized Excavation: Excavation below subgrade elevations or beyond indicated lines and dimensions without direction by Engineer. Unauthorized excavation, as well as remedial work directed by Engineer, shall be without additional compensation.

G. Fill: Soil materials used to raise existing grades.

H. Structures: Buildings, footings, foundations, retaining walls, slabs, tanks, curbs, mechanical and electrical appurtenances, or other man-made stationary features constructed above or below the ground surface.

I. Subbase Course: Aggregate layer placed between the subgrade and base course for hot-mix asphalt pavement, or aggregate layer placed between the subgrade and a cement concrete pavement or a cement concrete or hot-mix asphalt walk.

J. Subgrade: Uppermost surface of an excavation or the top surface of a fill or backfill immediately below subbase, drainage fill, drainage course, or topsoil materials.

K. Utilities: On-site underground pipes, conduits, ducts, and cables as well as underground services within buildings.

NOT FOR BID

1.3 PREINSTALLATION MEETINGS

A. Preinstallation Conference: Conduct pre-excavation conference at Project site.

1.4 INFORMATIONAL SUBMITTALS

A. Material test reports.

1.5 FIELD CONDITIONS

A. Utility Locator Service: Notify utility locator service for area where Project is located before beginning earth-moving operations.

B. Do not commence earth-moving operations until plant-protection measures specified in Section 015639 "Temporary Tree and Plant Protection" are in place.

PART 2 - PRODUCTS

2.1 SOIL MATERIALS

A. General: Provide borrow soil materials when sufficient satisfactory soil materials are not available from excavations.

B. Satisfactory Soils: Soil Classification Groups GW, GP, GM, SW, SP, and SM according to ASTM D 2487, or Groups A-1, A-2-4, A-2-5, and A-3 according to AASHTO M 145, or a combination of these groups; free of rock or gravel larger than 2 inches in any dimension, debris, waste, frozen materials, vegetation, and other deleterious matter.

C. Unsatisfactory Soils: Soil Classification Groups GC, SC, CL, ML, OL, CH, MH, OH, and PT according to ASTM D 2487, or Groups A-2-6, A-2-7, A-4, A-5, A-6, and A-7 according to AASHTO M 145, or a combination of these groups.

1. Unsatisfactory soils also include satisfactory soils not maintained within 2 percent of optimum moisture content at time of compaction.

D. Subbase Material: Naturally or artificially graded mixture of natural or crushed gravel, crushed stone, and natural or crushed sand; ASTM D 2940/D 2940M; with at least 90 percent passing a 1-1/2-inch sieve and not more than 12 percent passing a No. 200 sieve.

E. Base Course: Naturally or artificially graded mixture of natural or crushed gravel, crushed stone, and natural or crushed sand; ASTM D 294/D 2940M 0; with at least 95 percent passing a 1-1/2-inch sieve and not more than 8 percent passing a No. 200 sieve.

F. Engineered Fill: Naturally or artificially graded mixture of natural or crushed gravel, crushed stone, and natural or crushed sand; ASTM D 2940/D 2940M; with at least 90 percent passing a 1-1/2-inch sieve and not more than 12 percent passing a No. 200 sieve.

G. Bedding Course: Naturally or artificially graded mixture of natural or crushed gravel, crushed stone, and natural or crushed sand; ASTM D 2940/D 2940M; except with 100 percent passing a 1-inch sieve and not more than 8 percent passing a No. 200 sieve.

H. Drainage Course: Narrowly graded mixture of washed crushed stone, or crushed or uncrushed gravel; ASTM D 448; coarse-aggregate grading Size 57; with 100 percent passing a 1-1/2-inch sieve and zero to 5 percent passing a No. 8 sieve.

2.2 ACCESSORIES

A. Warning Tape: Acid- and alkali-resistant, polyethylene film warning tape manufactured for marking and identifying underground utilities, 6 inches wide and 4 mils thick, continuously inscribed with a description of the utility; colored to comply with local practice or requirements of authorities having jurisdiction.

1. Red: Electric.
2. Yellow: Gas, oil, steam and dangerous materials.
3. Orange: Telephone and other communications.
4. Blue: Water systems.
5. Green: Sewer systems.

NOT FOR BID

B. Detectable Warning Tape: Acid- and alkali-resistant, polyethylene film warning tape manufactured for marking and identifying underground utilities, a minimum of 6 inches wide and 4 mils thick, continuously inscribed with a description of the utility, with metallic core encased in a protective jacket for corrosion protection, detectable by metal detector when tape is buried up to 30 inches deep; colored to comply with local practice or requirements of authorities having jurisdiction.

1. Red: Electric.
2. Yellow: Gas, oil, steam and dangerous materials.
3. Orange: Telephone and other communications.
4. Blue: Water systems.
5. Green: Sewer systems.

NOT FOR BID

PART 3 - EXECUTION

3.1 PREPARATION

A. Protect structures, utilities, sidewalks, pavements, and other facilities from damage caused by settlement, lateral movement, undermining, washout, and other hazards created by earth-moving operations.

B. Protect and maintain erosion and sedimentation controls during earth-moving operations.

C. Protect subgrades and foundation soils from freezing temperatures and frost. Remove temporary protection before placing subsequent materials.

3.2 DEWATERING

A. Prevent surface water and ground water from entering excavations, from ponding on prepared subgrades, and from flooding Project site and surrounding areas.

B. Protect subgrades from softening, undermining, washout, and damage by rain or water accumulation.
   1. Reroute surface water runoff away from excavated areas. Do not allow water to accumulate in excavations. Do not use excavated trenches as temporary drainage ditches.

3.3 EXCAVATION, GENERAL

A. Unclassified Excavation: Excavate to subgrade elevations regardless of the character of surface and subsurface conditions encountered. Unclassified excavated materials may include rock, soil materials, and obstructions. No changes in the Contract Sum or the Contract Time will be authorized for rock excavation or removal of obstructions.

1. If excavated materials intended for fill and backfill include unsatisfactory soil materials and rock, replace with satisfactory soil materials.

NOT FOR BID

3.4 EXCAVATION FOR STRUCTURES

A. Excavate to indicated elevations and dimensions within a tolerance of plus or minus 1 inch. If applicable, extend excavations a sufficient distance from structures for placing and removing concrete formwork, for installing services and other construction, and for inspections.

1. Excavations for Footings and Foundations: Do not disturb bottom of excavation. Excavate by hand to final grade just before placing concrete reinforcement. Trim bottoms to required lines and grades to leave solid base to receive other work.
2. Pile Foundations: Stop excavations 6 to 12 inches above bottom of pile cap before piles are placed. After piles have been driven, remove loose and displaced material. Excavate to final grade, leaving solid base to receive concrete pile caps.
3. Excavation for Underground Tanks, Basins, and Mechanical or Electrical Utility Structures: Excavate to elevations and dimensions indicated within a tolerance of plus or minus 1 inch. Do not disturb bottom of excavations intended as bearing surfaces.

B. Excavations at Edges of Tree- and Plant-Protection Zones:

1. Excavate by hand or with an air spade to indicated lines, cross sections, elevations, and subgrades. If excavating by hand, use narrow-tine spading forks to comb soil and expose roots. Do not break, tear, or chop exposed roots. Do not use mechanical equipment that rips, tears, or pulls roots.
2. Cut and protect roots according to requirements in Section 015639 "Temporary Tree and Plant Protection."

3.5 EXCAVATION FOR WALKS AND PAVEMENTS

A. Excavate surfaces under walks and pavements to indicated lines, cross sections, elevations, and subgrades.

3.6 EXCAVATION FOR UTILITY TRENCHES

A. Excavate trenches to indicated gradients, lines, depths, and elevations.

1. Beyond building perimeter, excavate trenches to allow installation of top of pipe below frost line.

B. Excavate trenches to uniform widths to provide the following clearance on each side of pipe or conduit. Excavate trench walls vertically from trench bottom to 12 inches higher than top of pipe or conduit unless otherwise indicated.

1. Clearance: 12 inches each side of pipe or conduit.

C. Trench Bottoms: Excavate and shape trench bottoms to provide uniform bearing and support of pipes and conduit. Shape subgrade to provide continuous support for bells, joints, and barrels of pipes and for joints, fittings, and bodies of conduits. Remove projecting stones and sharp objects along trench subgrade.

1. For pipes and conduit less than 6 inches in nominal diameter, hand-excavate trench bottoms and support pipe and conduit on an undisturbed subgrade.

2. For pipes and conduit 6 inches or larger in nominal diameter, shape bottom of trench to support bottom 90 degrees of pipe or conduit circumference. Fill depressions with tamped sand backfill.

3. For flat-bottomed, multiple-duct conduit units, hand-excavate trench bottoms and support conduit on an undisturbed subgrade.

4. Excavate trenches 6 inches deeper than elevation required in rock or other unyielding bearing material to allow for bedding course.

D. Trenches in Tree- and Plant-Protection Zones:

1. Hand-excavate to indicated lines, cross sections, elevations, and subgrades. Use narrow-tine spading forks to comb soil and expose roots. Do not break, tear, or chop exposed roots. Do not use mechanical equipment that rips, tears, or pulls roots.
2. Do not cut main lateral roots or taproots; cut only smaller roots that interfere with installation of utilities.
3. Cut and protect roots according to requirements in Section 015639 "Temporary Tree and Plant Protection."

3.7 SUBGRADE INSPECTION

A. Compact all subgrade locations with a pneumatic tamper. Do not tamp wet or saturated subgrades.

B. Reconstruct subgrades damaged by freezing temperatures, frost, rain, accumulated water, or construction activities, as directed by Engineer, without additional compensation.

3.8 UNAUTHORIZED EXCAVATION

A. Fill unauthorized excavation under foundations or wall footings by extending bottom elevation of concrete foundation or footing to excavation bottom, without altering top elevation. Lean concrete fill, with 28-day compressive strength of 2500 psi, may be used when approved by Engineer.

NOT FOR BID

1. Fill unauthorized excavations under other construction, pipe, or conduit as directed by Engineer.

3.9 STORAGE OF SOIL MATERIALS

A. Stockpile borrow soil materials and excavated satisfactory soil materials without intermixing. Place, grade, and shape stockpiles to drain surface water. Cover to prevent windblown dust.

1. Stockpile soil materials away from edge of excavations. Do not store within drip line of remaining trees.

3.10 UTILITY TRENCH BACKFILL

A. Place backfill on subgrades free of mud, frost, snow, or ice.

B. Place and compact bedding course on trench bottoms and where indicated. Shape bedding course to provide continuous support for bells, joints, and barrels of pipes and for joints, fittings, and bodies of conduits.

C. Trenches under Footings: Backfill trenches excavated under footings and within 18 inches of bottom of footings with satisfactory soil; fill with concrete to elevation of bottom of footings. Concrete is specified in Section 033000 "Cast-in-Place Concrete."

D. Initial Backfill: Place and compact initial backfill of subbase material, free of particles larger than 1 inch in any dimension, to a height of 12 inches over the pipe or conduit.

1. Carefully compact initial backfill under pipe haunches and compact evenly up on both sides and along the full length of piping or conduit to avoid damage or displacement of piping or conduit. Coordinate backfilling with utilities testing.

E. Final Backfill: Place and compact final backfill of satisfactory soil to final subgrade elevation.

F. Warning Tape: Install warning tape directly above utilities, 16 inches below finished grade, for water and sewer. See Plan details for depth of electric line warning tape.

3.11 SOIL FILL

A. Plow, scarify, bench, or break up sloped surfaces steeper than 1 vertical to 4 horizontal so fill material will bond with existing material.

B. Place and compact fill material in layers to required elevations as follows:

1. Under grass and planted areas, use satisfactory soil material.
2. Under walks and pavements, use satisfactory soil material.

NOT FOR BID

3. Under steps and ramps, use engineered fill.
4. Under building slabs, use engineered fill.
5. Under footings and foundations, use engineered fill.

NOT FOR BID

3.12 SOIL MOISTURE CONTROL

A. Uniformly moisten or aerate subgrade and each subsequent fill or backfill soil layer before compaction to within 2 percent of optimum moisture content.

1. Do not place backfill or fill soil material on surfaces that are muddy, frozen, or contain frost or ice.
2. Remove and replace, or scarify and air dry, otherwise satisfactory soil material that exceeds optimum moisture content by 2 percent and is too wet to compact to specified dry unit weight.

3.13 COMPACTION OF SOIL BACKFILLS AND FILLS

A. Place backfill and fill soil materials in layers not more than 8 inches in loose depth for material compacted by heavy compaction equipment and not more than 4 inches in loose depth for material compacted by hand-operated tampers.

B. Place backfill and fill soil materials evenly on all sides of structures to required elevations and uniformly along the full length of each structure.

C. Compact soil materials to not less than the following percentages of maximum dry unit weight according to ASTM D 698:

1. Under structures, building slabs, steps, and pavements, scarify and recompact top 12 inches of existing subgrade and each layer of backfill or fill soil material at 95 percent.
2. Under walkways, scarify and recompact top 6 inches below subgrade and compact each layer of backfill or fill soil material at 92 percent.
3. Under turf or unpaved areas, scarify and recompact top 6 inches below subgrade and compact each layer of backfill or fill soil material at 85 percent.
4. For utility trenches, compact each layer of initial and final backfill soil material at 85 percent.

3.14 GRADING

A. General: Uniformly grade areas to a smooth surface, free of irregular surface changes. Comply with compaction requirements and grade to cross sections, lines, and elevations indicated.

B. Site Rough Grading: Slope grades to direct water away from buildings and to prevent ponding. Finish subgrades to elevations required to achieve indicated finish elevations, within the following subgrade tolerances:

1. Turf or Unpaved Areas: Plus or minus 1 inch.
2. Walks: Plus or minus 1 inch.
3. Pavements: Plus or minus 1/2 inch.

NOT FOR BID

3.15 SUBBASE AND BASE COURSES UNDER PAVEMENTS AND WALKS

A. Place subbase course and base course on subgrades free of mud, frost, snow, or ice.

B. On prepared subgrade, place subbase course and base course under pavements and walks as follows:

1. Shape subbase course and base course to required crown elevations and cross-slope grades.
2. Place subbase course and base course that exceeds 6 inches in compacted thickness in layers of equal thickness, with no compacted layer more than 6 inches thick or less than 3 inches thick.
3. Compact subbase course and base course at optimum moisture content to required grades, lines, cross sections, and thickness to not less than 95 percent of maximum dry unit weight according to ASTM D 698.

3.16 DRAINAGE COURSE UNDER CONCRETE SLABS-ON-GRADE

A. Place drainage course on subgrades free of mud, frost, snow, or ice.

B. On prepared subgrade, place and compact drainage course under cast-in-place concrete slabs-on-grade as follows:

1. Place drainage course that exceeds 6 inches in compacted thickness in layers of equal thickness, with no compacted layer more than 6 inches thick or less than 3 inches thick.
2. Compact each layer of drainage course to required cross sections and thicknesses to not less than 95 percent of maximum dry unit weight according to ASTM D 698.

3.17 FIELD QUALITY CONTROL

A. Special Inspections: Owner will engage a qualified special inspector to perform inspections:

B. Testing Agency: Owner will engage a qualified geotechnical engineering testing agency to perform tests and inspections.

C. Allow testing agency to inspect and test subgrades and each fill or backfill layer. Proceed with subsequent earth moving only after test results for previously completed work comply with requirements.

D. Footing Subgrade: At footing subgrades, at least one test of each soil stratum will be performed to verify design bearing capacities. Subsequent verification and approval of other footing

subgrades may be based on a visual comparison of subgrade with tested subgrade when approved by Engineer.

E. When testing agency reports that subgrades, fills, or backfills have not achieved degree of compaction specified, scarify and moisten or aerate, or remove and replace soil materials to depth required; recompact and retest until specified compaction is obtained.

3.18 PROTECTION

A. Protecting Graded Areas: Protect newly graded areas from traffic, freezing, and erosion. Keep free of trash and debris.

B. Repair and reestablish grades to specified tolerances where completed or partially completed surfaces become eroded, rutted, settled, or where they lose compaction due to subsequent construction operations or weather conditions.

C. Where settling occurs before Project correction period elapses, remove finished surfacing, backfill with additional soil material, compact, and reconstruct surfacing.

1. Restore appearance, quality, and condition of finished surfacing to match adjacent work, and eliminate evidence of restoration to greatest extent possible.

3.19 DISPOSAL OF SURPLUS AND WASTE MATERIALS

A. Remove surplus satisfactory soil and waste materials, including unsatisfactory soil, trash, and debris, and legally dispose of them off Owner's property.

END OF SECTION 312000

NOT FOR BID

NOT FOR BID

SECTION 329200 - TURF AND GRASSES

PART 1 - GENERAL

1.1 SUMMARY

A. Section Includes:

1. Seeding.
2. Sodding.

1.2 DEFINITIONS

A. Pesticide: A substance or mixture intended for preventing, destroying, repelling, or mitigating a pest. This includes insecticides, miticides, herbicides, fungicides, rodenticides, and molluscicides. It also includes substances or mixtures intended for use as a plant regulator, defoliant, or desiccant.

B. Planting Soil: Existing, on-site soil; imported soil; or manufactured soil that has been modified with soil amendments and perhaps fertilizers to produce a soil mixture best for plant growth. See Section 329113 "Soil Preparation" and drawing designations for planting soils.

1.3 PREINSTALLATION MEETINGS

A. Preinstallation Conference: Conduct conference at Project site.

1.4 INFORMATIONAL SUBMITTALS

A. Certification of grass seed.

1. Certification of each seed mixture for turfgrass sod.

B. Product certificates.

1.5 QUALITY ASSURANCE

A. Installer Qualifications: A qualified landscape Installer whose work has resulted in successful sod establishment.

1. Installer's Field Supervision: Require Installer to maintain an experienced full-time supervisor on Project site when work is in progress.

2. Personnel Certifications: Installer's field supervisor shall have certification in one of the following categories from the Professional Landcare Network:

   a. Landscape Industry Certified Technician - Exterior.
   b. Landscape Industry Certified Lawncare Manager.
   c. Landscape Industry Certified Lawncare Technician.

3. Pesticide Applicator: State licensed, commercial.

NOT FOR BID

1.6 DELIVERY, STORAGE, AND HANDLING

A. Seed and Other Packaged Materials: Deliver packaged materials in original, unopened containers showing weight, certified analysis, name and address of manufacturer, and indication of compliance with state and Federal laws as applicable.

B. Sod: Harvest, deliver, store, and handle sod according to requirements in "Specifications for Turfgrass Sod Materials" and "Specifications for Turfgrass Sod Transplanting and Installation" sections in TPI's "Guideline Specifications to Turfgrass Sodding." Deliver sod within 24 hours of harvesting and in time for planting promptly. Protect sod from breakage and drying.

PART 2 - PRODUCTS

2.1 SEED

A. Grass Seed: Fresh, clean, dry, new-crop seed complying with AOSA's "Rules for Testing Seeds" for purity and germination tolerances.

B. Seed Species:

   1. Quality: State-certified seed of grass species as noted on the Plans.

2.2 TURFGRASS SOD

A. Turfgrass Sod: Number 1 Quality/Premium, including limitations on thatch, weeds, diseases, nematodes, and insects, complying with "Specifications for Turfgrass Sod Materials" in TPI's "Guideline Specifications to Turfgrass Sodding." Furnish viable sod of uniform density, color, and texture that is strongly rooted and capable of vigorous growth and development when planted.

2.3 FERTILIZERS

A. Commercial Fertilizer: Commercial-grade complete fertilizer of neutral character, consisting of fast- and slow-release nitrogen, 50 percent derived from natural organic sources of urea formaldehyde, phosphorous, and potassium in the following composition:

1. Composition: 1 lb/1000 sq. ft. of actual nitrogen, 4 percent phosphorous, and 2 percent potassium, by weight.

B. Slow-Release Fertilizer: Granular or pelleted fertilizer consisting of 50 percent water-insoluble nitrogen, phosphorus, and potassium in the following compositions:

1. Composition: 20 percent nitrogen, 10 percent phosphorous, and 10 percent potassium, by weight.

NOT FOR BID

2.4 MULCHES

A. Straw Mulch: Provide air-dry, clean, mildew and seed-free, salt hay or threshed straw of wheat, rye, oats, or barley.

B. Sphagnum Peat Mulch: Partially decomposed sphagnum peat moss, finely divided or of granular texture, and with a pH range of 3.4 to 4.8.

C. Muck Peat Mulch: Partially decomposed moss peat, native peat, or reed-sedge peat, finely divided or of granular texture, with a pH range of 6 to 7.5, and having a water-absorbing capacity of 1100 to 2000 percent, and containing no sand.

D. Compost Mulch: Well-composted, stable, and weed-free organic matter, pH range of 5.5 to 8; moisture content 35 to 55 percent by weight; 100 percent passing through 1-inch sieve; soluble salt content of 2 to 5 decisiemens/m; not exceeding 0.5 percent inert contaminants and free of substances toxic to plantings; and as follows:

2.5 PESTICIDES

A. General: Pesticide, registered and approved by the EPA, acceptable to authorities having jurisdiction, and of type recommended by manufacturer for each specific problem and as required for Project conditions and application. Do not use restricted pesticides unless authorized in writing by authorities having jurisdiction.

PART 3 - EXECUTION

3.1 TURF AREA PREPARATION

A. General: Prepare planting area for soil placement and mix planting soil according to Section 329113 "Soil Preparation."

B. Reduce elevation of planting soil to allow for soil thickness of sod.

C. Moisten prepared area before planting if soil is dry. Water thoroughly and allow surface to dry before planting. Do not create muddy soil.

D. Before planting, obtain Architect's acceptance of finish grading; restore planting areas if eroded or otherwise disturbed after finish grading.

3.2 SEEDING

A. Sow seed with spreader or seeding machine. Do not broadcast or drop seed when wind velocity exceeds 5 mph.

1. Evenly distribute seed by sowing equal quantities in two directions at right angles to each other.
2. Do not use wet seed or seed that is moldy or otherwise damaged.
3. Do not seed against existing trees. Limit extent of seed to outside edge of planting saucer.

B. Sow seed at a total rate as shown on Erosion and Sediment Control Details

C. Rake seed lightly into top 1/2 inch of soil, roll lightly, and water with fine spray.

D. Protect seeded areas with slopes not exceeding 1:6 by spreading straw mulch. Spread uniformly at a minimum rate as shown on Erosion and Sediment Control Details to form a continuous blanket in loose thickness over seeded areas.

1. Anchor straw mulch by crimping into soil with suitable mechanical equipment.

3.3 SODDING

A. Lay sod within 24 hours of harvesting. Do not lay sod if dormant or if ground is frozen or muddy.

B. Lay sod to form a solid mass with tightly fitted joints. Butt ends and sides of sod; do not stretch or overlap. Stagger sod strips or pads to offset joints in adjacent courses. Avoid damage to soil or sod during installation. Tamp and roll lightly to ensure contact with soil, eliminate air pockets, and form a smooth surface. Work sifted soil or fine sand into minor cracks between pieces of sod; remove excess to avoid smothering sod and adjacent grass.

1. Lay sod across slopes exceeding 1:3.
2. Anchor sod on slopes exceeding 1:6 with wood pegs or steel staples spaced as recommended by sod manufacturer but not less than two anchors per sod strip to prevent slippage.

C. Saturate sod with fine water spray within two hours of planting. During first week after planting, water daily or more frequently as necessary to maintain moist soil to a minimum depth of 1-1/2 inches below sod.

NOT FOR BID

3.4 TURF MAINTENANCE

A. General: Maintain and establish turf by watering, fertilizing, weeding, mowing, trimming, replanting, and performing other operations as required to establish healthy, viable turf. Roll, regrade, and replant bare or eroded areas and remulch to produce a uniformly smooth turf. Provide materials and installation the same as those used in the original installation.

B. Mow turf as soon as top growth is tall enough to cut. Repeat mowing to maintain specified height without cutting more than one-third of grass height. Remove no more than one-third of grass-leaf growth in initial or subsequent mowings.

3.5 SATISFACTORY TURF

A. Turf installations shall meet the following criteria as determined by Architect:

1. Satisfactory Seeded Turf: At end of maintenance period, a healthy, uniform, close stand of grass has been established, free of weeds and surface irregularities, with coverage meeting the requirements of the Erosion and Sediment Control Details.
2. Satisfactory Sodded Turf: At end of maintenance period, a healthy, well-rooted, even-colored, viable turf has been established, free of weeds, open joints, bare areas, and surface irregularities.

B. Use specified materials to reestablish turf that does not comply with requirements, and continue maintenance until turf is satisfactory.

END OF SECTION 329200

NOT FOR BID

(THIS PAGE INTENTIONALLY LEFT BLANK)

NOT FOR BID

401002 – BITUMINOUS CONCRETE, SUPERPAVE, TYPE C, 160 GYRATIONS, PG 64-22 (CARBONATE STONE)
401011 – BITUMINOUS CONCRETE, SUPERPAVE, TYPE B, 160 GYRATIONS, PG 64-22

NOT FOR BID

Description:

This specification utilizes DelDOT Standard Specifications.

Warm mix asphalt (WMA) is the generic term used to describe the reduction in production, paving, and compaction temperatures achieved through the application of one or more WMA technologies.

WMA may be produced by one or a combination of several technologies involving asphalt foaming processes and equipment or additives that facilitate the reduction of the temperature at which the mix can be placed and satisfactorily compacted thereby permitting the mix to be produced at reduced temperatures from a comparable mix without the Warm Mix Technology.

The following Subsections of the Standard Specifications shall be applicable: 401.01, 401.03 - 401.10, 401.12, and 401.13. All other subsections have been modified herein.

Materials:

If the Contractor proposes to use a combination of materials that are not covered by this Specification, the mix design shall be submitted and reviewed by the Engineer 30 calendar days prior to use.

Conform to the requirements of Subsections 823.01, 823.05- 823.17, and 823.25 - 823.28 of the Standard Specifications and the following for bituminous materials:

Asphalt Binder:

The asphalt binder shall meet the requirements of Superpave performance-grade asphalt binder, as referenced in the Plans, according to M 320 [1], Table 1 and tested according to AASHTO R29 with the following test ranges:

TEST PROCEDURE	AASHTO REFERENCE	SPECIFICATION LIMITS
Temperature, °C	M 320	Per Grade
Original DSR, G*/sin (δ)	T 315	1.00 - 2.20 kPa
RTFO DSR, G*/sin (δ)	T 315	>/= 2.20 kPa
PAV DSR, G* sin (δ)	T 315	</=5000 kPa
BBR Creep Stiffness, *S*	T 313	</= 300.0 kPa

TEST PROCEDURE	AASHTO REFERENCE	SPECIFICATION LIMITS
BBR *m*-value	T 313	>/=0.300

Note 1: The exception to M 320 is that the original DSR shall be 1.00 to 2.20 kPa

Substitution of a higher temperature grade will require prior approval by the Engineer.

The highest low temperature grade virgin binder to be used is -22.

Depending on the level of RAP used, the low temperature properties, per T 313, may be different than stated in M 320 or the previous table.

Recycled Materials:

The percentage allowance of recycled asphalt pavement shall be controlled through the use of the Materials & Research recycled mixture program available through the Materials & Research Section. The program can be used by the contractor to determine which materials and combinations of materials can be used to meet the specified material on the contract.

No recycled asphalt shingles shall be used in WMA.

Mineral Aggregate:

Conform to Section 805 and the following criteria. These criteria apply to the combined aggregate blend.

DESIGN ESAL'S (MILLIONS)	COARSE AGGREGATE ANGULARITY[1] (% MIN)		FINE AGGREGATE ANGULARITY[2] (% MIN)		CLAY CONTENT[3] (% - MIN)	FLAT AND ELONGATED [4] (% - MAX)
	≤ 100 mm	> 100 mm	≤ 100 mm	> 100 mm		
< 0.3	55/-	-/-	-	-	40	-
0.3 to < 3	75/-	50/-	40	40	40	10
3 to <10	85/80[5]	60/-	45	40	45	
10 < 30	95/90	80/75	45	40	45	
≤30	100/100	100/100	45	45	50	

[1]Coarse Aggregate Angularity is tested according to D5821.
[2]Fine Aggregate Angularity is tested according to TP33.

NOT FOR BID

[3]Clay Content is tested according to T176.
[4]Flat and Elongated is tested according to D4791 with a 5:1 aspect ratio.
[5] 85/80 denotes that 85% of the coarse aggregate has one fractured face and 80% has two or more fractured faces.

The following source properties apply to the individual aggregates in the aggregate blend for the proposed JMF.

TEST METHOD	SPECIFICATION LIMITS
Toughness, T96 Percent Loss, Maximum	40
Soundness, T104 Percent Loss, Maximum for five cycles	20
Deleterious Materials, T112 Percent, Maximum	10
Moisture Sensitivity, T283 Percent, Minimum	80

NOT FOR BID

Supply all polish values to the Engineer upon request. The polish value of the composite aggregate blend for any roadway with a minimum average daily traffic volume (ADT) of 8000 vehicles and a posted speed of 35 mph (60 kph) or greater shall be greater than 8.0 when tested according to Maryland State Highway Administration 'MSMT 411 - Laboratory Method of Predicting Frictional Resistance of Polished Aggregates and Pavement Surfaces'. RAP shall be assigned a value of 4.0.

Mineral Filler:

Conform to M17.

Warm Mix Additives:

For any WMA technology requiring addition of any material by the producer during production, the following information will be submitted with the proposed JMF for review and approval at least 30 calendar days prior to production:

1. WMA technology and/or additive information.
2. WMA technology manufacturer's recommendation for usage.
3. WMA technology target dosage rate and tolerance envelope. Support tolerance envelope with test data demonstrating acceptable mix production properties conforming to all sections of this specification.
4. WMA technology manufacturer's material safety data sheets (MSDS).
5. Documentation of past WMA technology field application including points of contact.

6. Temperature ranges for mixing and compacting.
7. Laboratory test data, samples, and sources of all mix components, and asphalt binder viscosity-temperature relationships.

The contractor shall follow the manufacturer's recommendation for incorporating additives and WMA technologies into the mix. The contractor shall also comply with the manufacturer's recommendation regarding receiving, storage, and delivery of additives.

If the producer performs blending of the WMA technology in their tank, a separate Quality Control plan shall be submitted by the producer to the Department for review and approval at least 30 calendar days prior to production.

NOT FOR BID

Mixture Requirements:

Mix Design. Develop and submit a job mix formula for each mixture according to R35. Each mix design shall be capable of being produced, placed, and compacted as specified. Apply all mix design requirements for Superpave to the development of the WMA mix design.

Gradation: The FHWA Superpave 0.45 Power Chart shall be used to define permissible gradations for the specified mixture. Type C shall be either a No.4 (4.75 mm), 3/8" (9.5 mm), or 1/2" (12.5 mm) Nominal Maximum Aggregate Size Hot-Mix. Unless otherwise noted in the Plans, the Type C shall meet the 3/8" (9.5 mm) Nominal Maximum Aggregate Size. Type B Hot-Mix shall be the 3/4" (19.0 mm) Nominal Maximum Aggregate Size and the Bituminous Concrete Base Course (BCBC) shall be the 1" (25.0 mm) Nominal Maximum Aggregate Size. Target values for percent passing each standard sieve for the design aggregate structure shall comply with the Superpave control points and should avoid the restricted zone. Percentages shall be based on the washed gradation of the aggregate according to T11.

Thin WMA, Type C shall be a No. 4 (4.75 mm) Nominal Maximum Aggregate Size Only.

In addition to the results of the material requirements specified above, the following material properties shall be provided by the Contractor: bulk specific gravity G_{sb}, apparent specific gravity G_{sa}, and the absorption of the individual aggregate stockpiles to be used, tested according to T84 and T85 and reported to three decimal places along with the specific gravity of the mineral filler to be used, tested according to T100 and reported to three decimal places.

Superpave Gyratory Compactive (SGC) Effort:

The Superpave Gyratory Compaction effort employed throughout mixture design, field quality control, or field quality assurance shall be as indicated below. All mixture specimens tested in the SGC shall be compacted to N_{Max} Height data provided by the SGC shall be employed to calculate volumetric properties at $N_{INITIAL}$, N_{DEISGN}, and N_{MAX}

Superpave Gyratory Compactive (SGC) Effort:

DESIGN TRAFFIC LEVEL (MILLION ESAL'S)	$N_{INITIAL}$	N_{DESIGN}	N_{MAX}
0.3 to < 3	7	75	115
3 to < 30	8	100	160
≥30	9	125	205

NOT FOR BID

Volumetric Design Parameters. The design aggregate structure at the target asphalt cement content shall satisfy the volumetric criteria below:

DESIGN ESAL'S (MILLION)	REQUIRED DENSITY (% OF THEORETICAL MAXIMUM SPECIFIC GRAVITY)			VOIDS-IN-MINERAL AGGREGATE (% - MINIMUM) NOMINAL MAX. AGGREGATE (mm)					VOIDS FILLED WITH ASPHALT (% - MINIMUM)
	$N_{INITIAL}$	N_{DESIGN}	N_{MAX}	25.0	19.0	9.5	12.5	4.75	
0.3 to < 3	≥90.5	96.0	98.0	12.5	13.5	15.5	14.5	16.5	65.0 - 78.0
3 to < 10	≥ 89.0								65.0 - 75.0[1]
10 < 30									
≥ 30									

Air voids (V_a) at N_{design} shall be 4.0% for all ESAL designs. Air voids (V_a) at N_{max} shall be a minimum of 2.0% for all ESAL designs

The dust to effective binder ratio for the mix having aggregate gradations above the Primary Control Sieve (PCS) Control Points shall be 0.6-1.2. For aggregate gradations below the PCS Control Points, the dust to binder ratio shall be 0.8-1.6. For the No. 4 (4.75 mm) mix, the dust to binder ratio shall be 0.9-2.0 whether above or below the PCS Control Points.

For 3/8" (9.5 mm) Nominal Maximum Aggregate Size mixtures, the specified VFA range shall be 73.0% to 76.0% and for 4.75 mm Nominal Maximum Size mixtures, the range shall be 75 % to 78% for design traffic levels ≥3 million ESALs.

Gradation Control Points:

The combined aggregates shall conform to the gradation requirement specified in the following table when tested according to T11 and T27.

Nominal Maximum Aggregates Size Control Points, Percent Passing										
	25.0 mm		19.0 mm		12.5 mm		9.5 mm		4.75 mm	
SIEVE SIZE	MIN	MAX	MIN	MAX	MIN	MAX	MIN	MAX	MIN	MAX
37.5 mm	100	-	-	-	-	-	-	-	-	-
25.0 mm	90	100	100	-	-	-	-	-	-	-
19.0 mm	-	90	90	100	100	-	-	-	-	-
12.5 mm	-	-	-	90	90	100	100	-	100	-
9.5 mm	-	-	-	-	-	90	90	100	95	100
4.75 mm	-	-	-	-	-	-	-	90	90	100
2.36 mm	19	45	23	49	28	58	32	67	-	-
1.18 mm	-	-	-	-	-	-	-	-	30	60
0.075 mm	1	7	2	8	2	10	2	10	6	12

NOT FOR BID

Note: The aggregate gradation for each sieve must fall within the minimum and maximum limits.

Gradation Classification:

The Primary Control Sieve (PCS) defines the break point of fine and coarse mixtures. The combined aggregates shall be classified as coarse graded when it passes below the Primary Control Sieve (PCS) control point as defined below. All other gradations shall be classified as fine graded.

PCS CONTROL POINT FOR MIXTURE NOMINAL MAXIMUM AGGREGATES SIZE (% PASSING)					
Nominal maximum Aggregates Size	25.0 mm	19.0 mm	12.5 mm	9.5 mm	4.5 mm
Primary Control Sieve	4.75 mm	4.75 mm	2.36 mm	2.36 mm	1.18 mm
PCS Control Point	40	47	39	47	30-60

Plant Production Tolerances:

Volumeric Property	Superpave Criteria
Air Voids (V_a) at (%) N_{max} Air Voids (V_a) at N_{design} (%)	2.0 (min) 5.5 (max)
Voids in Mineral Aggregate (VMA) at N_{design}	

Volumeric Property	Superpave Criteria
25.0 mm Bituminous Concrete Base Course 19.0 mm Type B Hot-Mix 12.5 mm Type C Hot-Mix 9.5 mm Type C Hot-Mix 4.5 mm Type C Hot-Mix	[illegible].2 +[illegible].0

NOT FOR BID

Design Evaluation:

The contractor shall furnish a Job Mix Formula (JMF) for review and approval. The Engineer may elect to evaluate the proposed JMF and suitability of all materials. All materials requested by the Engineer shall be provided at the contractor's expense to the Central Laboratory in Dover in a timely manner upon request. To verify the complete mixture design and evaluate the suitability of all materials, the following approximate quantities are required:

5.25 gal (20 liters) of the asphalt binder;
0.13 gal (0.5 liters) sample of liquid heat-stable anti-strip additive;
254 lb. (115 kg) of each coarse aggregate;
154 lb. (70 kg) of each intermediate and fine aggregate;
22 lb. (10 kg) of mineral filler; and
254 lb. (115 kg) of RAP, when applicable.

The proposed JMF shall include the following:

Plot of the design aggregate structure on the FHWA Superpave 0.45 power chart showing the maximum density line, Superpave control points, and recommended restricted zone.

Plot of the three trial asphalt binder contents at ±0.5% gyratory compaction curves where the percent of maximum specific gravity (% of G_{mm}) is plotted against the log base ten of the number of gyrations (log (N)) showing the applicable criteria for $N_{initial}$, N_{design}, and $N_{max.}$

Plot of the percent asphalt binder by total weight of the mix (P_b) versus the following:

% of G_{mm} at N_{design}, VMA at N_{desgin}, VFA at N_{design}, Fines to effective asphalt binder (P_{be}) ratio, and unit weight (kg/m5) at both N_{design} and N_{max}.

Summary of the consensus property standards test results for the design aggregate structure, summary of the source property standards test results for the individual aggregates in the design aggregate structure, target value of the asphalt binder content, and a table of G_{mm} of the asphalt mixture for the four trial asphalt binder contents determined according to T209.

The JMF shall also include the NCAT Ignition Oven calibration for the specific materials utilized for this mix.

Construction:

Production Plants. The contractor shall modify and/or operate their production plant as required by the manufacturer to introduce the WMA technology.

Weather Limitations. Place mix only on dry, unfrozen surfaces and only when weather conditions allow for proper production, placement, handling, and compacting.

The minimum ambient temperature shall be 32 degrees F and rising.

The following table of ambient temperatures for various binder grades and lift thicknesses for placement with the following parameters:

-Minimum surface temperature of 32 degrees F
-Maximum production temperature of 275 degrees F
-Maximum wind speed of 8 miles per hour

Lift Thickness (in)	PG Binder		
	76-22	70-22	64-22
1.50	50F	45F	40F
2.00	40F	38F	35F
3.00	32F	32F	32F

NOT FOR BID

Construction outside of these conditions will be at the discretion of the Engineer.

Compaction:

Compaction shall be performed by multiple passes of a steel roller to the satisfaction of the Owner.

Method of Measurement and Basis of Payment:

The item shall be included in the lump sum price bid for the contract with no separate measurement made for the individual item, unless noted in the Plans.

END OF SECTION

NOT FOR BID

602003 – PCC MASONRY, ABUTMENT FOOTING, CLASS B
602015 – PCC MASONRY, ABUTMENT ABOVE FOOTING, CLASS A

Description of Work:

This specification utilizes DelDOT Standard Specifications.

The item shall consist of furnishing and installing all necessary materials, concrete, bar reinforcement, excavation and backfill, dewatering and incidentals needed for constructing portland cement concrete bridge abutments as shown and noted on the plans and specifications. Excavation and dewatering which are necessary for construction of portland cement concrete masonry subfoundation shall be included with work under this item.

Materials and Construction Methods:

Concrete:

All materials used in the production of portland cement concrete (P.C.C.) bridge abutments shall conform to the applicable requirements of Section 812 of the Standard Specifications for Class A and/or Class B concrete as specified on the plans. Bar reinforcement as shown on the plans, shall conform to the requirements of Section 603 or 604 as applicable. All applicable requirements of Section 602 of the Standard Specifications shall be in effect.

Excavation and Backfill:

Excavation and backfill for P.C.C. Bridge Abutments shall be performed in accordance with Section 207 of the Standard Specifications.

Quality Control Testing During Construction:

Contractor shall employ and pay for services of an Independent Testing Laboratory to perform tests in accordance with the most recent test methods of AASHTO, or ASTM in effect on the date of advertisement for bid proposals:

a. Slump: One test at point of discharge for each concrete truck delivery.
b. Compression Test Specimen: One set of four standard cylinders for each compressive-strength test.
c. Compressive-Strength Tests: One set for each concrete truck delivery; one specimen tested at 7 days, two specimens tested at 28 days, and one specimen retained in reserve for later testing if required.
d. Test results will be reported in writing to Engineer within 24 hours after tests.

Method of Measurement and Basis of Payment:

The item shall be included in the lump sum price bid for the contract with no separate measurement made for the individual item including but not limited to furnishing and placing all materials required, concrete, bar reinforcement, excavation, backfill and backfilling, dewatering, finishing concrete surfaces, all labor, tools, equipment and necessary incidentals to complete the work, and testing.

END OD SECTION 602003/602015

NOT FOR BID

NOT FOR BID

705007 – TRUNCATED DOMES

PART 1 – GENERAL

1.1 SUMMARY

A. This work consists of furnishing all materials and installing a detectable warning surface system that complies with the Americans with Disabilities Act (ADA) (1990) for outdoor facilities. The system shall be in accordance with these Special Provisions, the Plans, and the Standard Construction Details and as directed by the Engineer.

B. Related Sections: The following related sections contain requirements that relate to this Section.

1. Delaware Department of Transportation (DelDOT) Standard Specifications dated August 2001.

PART 2 – PRODUCTS

2.1 MATERIALS

A. The Contractor shall submit a sample of the proposed system to the Engineer for approval.

1. Precast concrete, or fired clay brick, paver units, each with the truncated dome pattern, set on the concrete sidewalk surface. For this application, the Contractor shall use mortar for adhesion to the sidewalk surface and for joint filling.

B. The Engineer will not approve stamping systems, metal plates or ceramic tiles.

C. The Contractor shall certify that the surface of the system is slip resistant. The Contractor shall submit test results for the system when it has been tested using one of the following standard methods:

1. ASTM C-1028 – Determining the Static Coefficient of Friction of Ceramic Tile and Other Like Surfaces by Horizontal Dynamometer Pull-Meter Method.

2. ASTM C-2047 – Static Coefficient of Friction of Polish-Coated Floor Surfaces as Measured by the James Machine.

3. ASTM D-5859 – Determining the Traction of Footwear on Painted Surfaces Using the Variable Incidence Tester.

4. ASTM E-303 – Measuring Surface Frictional Properties Using the British Pendulum Tester.

5. VOSI V41.21-98 – Universal Specification / Test Method for Slip Resistant Walkways, in the Field and Laboratory, as measured by a Drag Type Friction Tester (Voices of Safety International (VOSI).www.voiceofsafety.com)

D. The final surface of the system shall have a brick red color, unless specified otherwise on the Plans.

NOT FOR BID

PART 3 – EXECUTION

3.1 PLACEMENT

A. The full thickness of the sidewalk and base material under the system shall be constructed at the lower elevation to permit the installed paver units to be flush, and the full height of the truncated domes to be above, the adjacent sidewalk surfaces. Paver units shall be set in a bed of mortar and have mortared joints.

B. At the edges of the system, changes in grade up to 0.25 inch (6 mm) may be vertical. The Contractor shall bevel changes in grade between 0.25 and 0.50 inch (6 and 13 mm) with a slope no steeper than 2 to 1.

END OF SECTION 705520