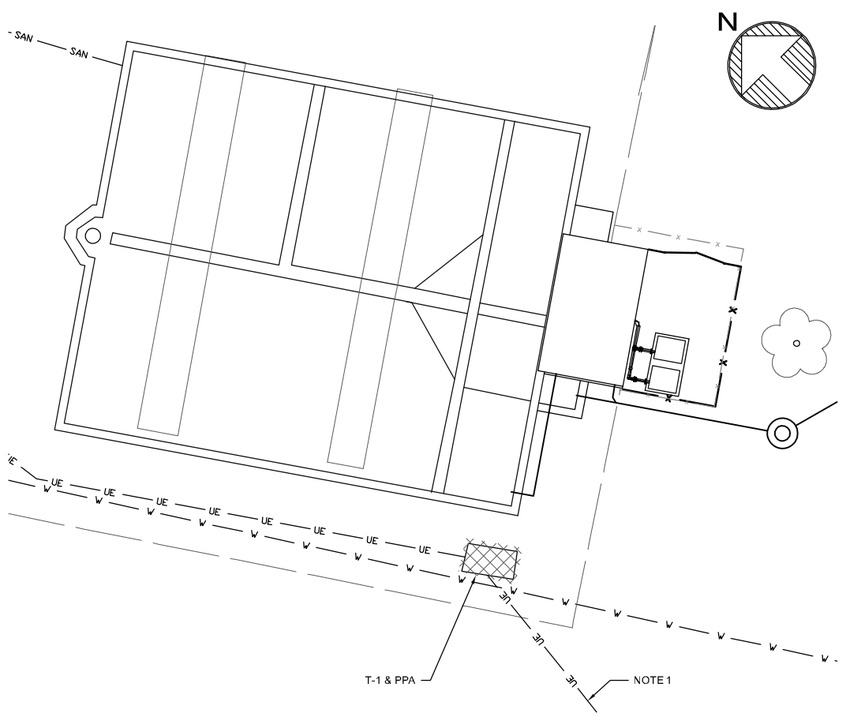

ENLARGED DEMOLITION SITE PLAN

0 10 20 40 60

SCALE IN FEET

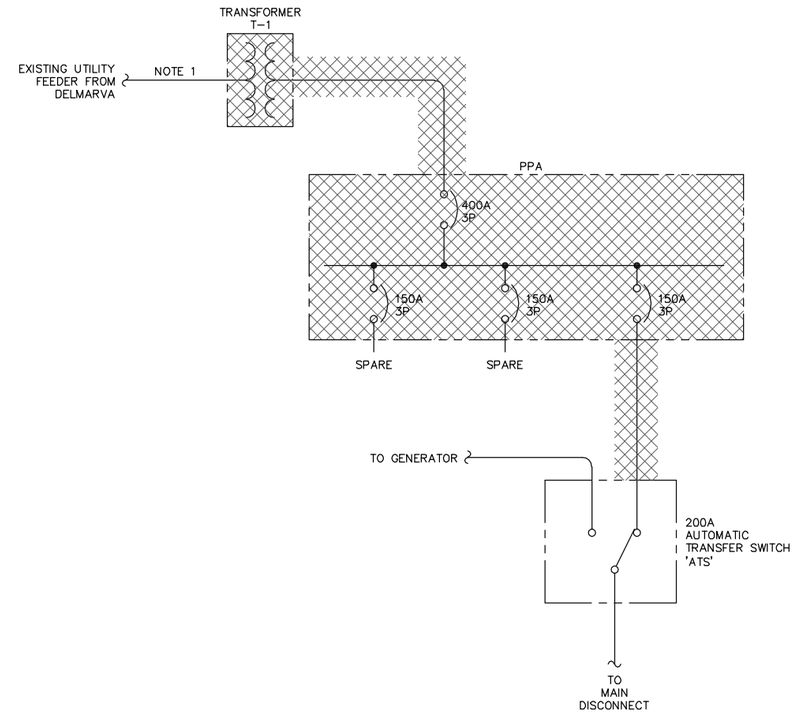

DEMOLITION SINGLE LINE DIAGRAM

N.T.S.

NOTES:

1. COORDINATE REMOVAL OF EXISTING UTILITY FEED AND POLE MOUNTED METER WITH DELMARVA POWER..

LEGEND

EXISTING

NEW

TO BE DEMOLISHED

ED-01

Issue Status: FOR BID

AECOM

Keystone ENGINEERING GROUP

LUMS POND WWTF MODIFICATIONS
STATE OF DELAWARE DEPARTMENT OF NATURAL RESOURCES
DIVISION OF PARKS AND RECREATION
Project No.: 60551786

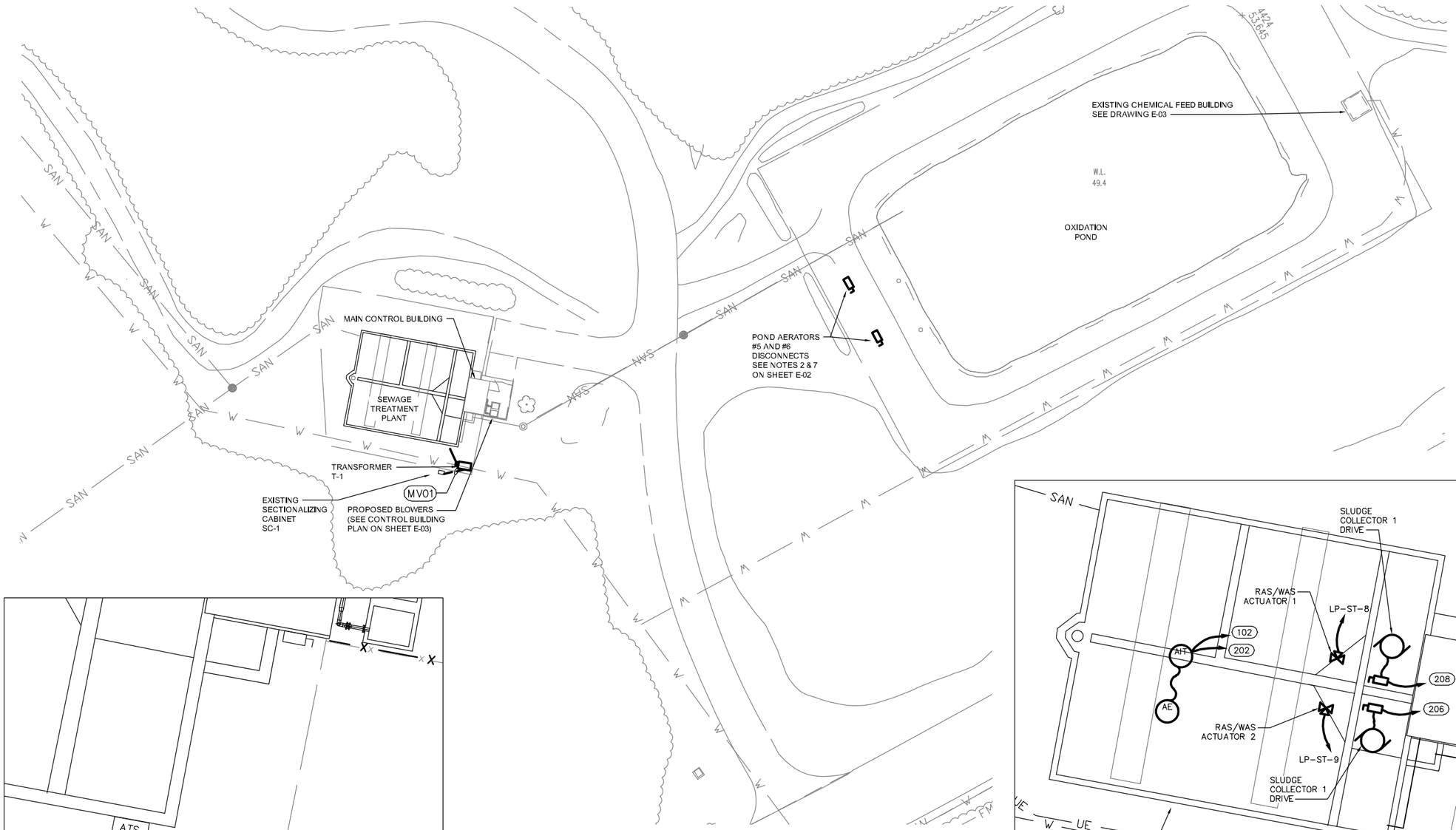

WWTP SITE PLAN

0 30 60 120 180

SCALE IN FEET

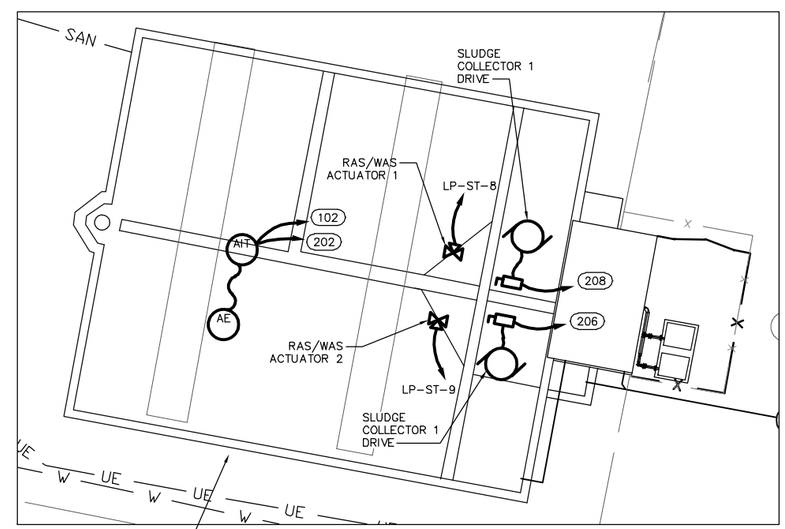

ENLARGED SITE PLAN

0 10 20 40 60

SCALE IN FEET

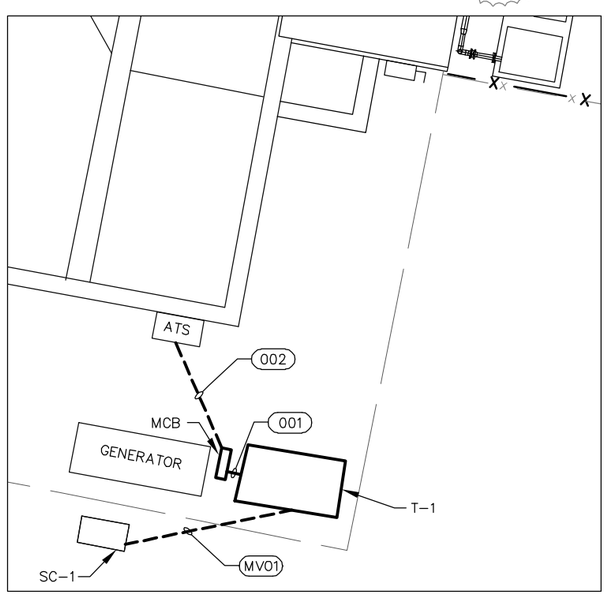

ENLARGED PLAN

0 5 10 20 30

SCALE IN FEET

LEGEND

EXISTING

NEW

WILLIAM F. BLEILER
LICENSE
No. 17386
DELAWARE
PROFESSIONAL ENGINEER

Issue Status: FOR BID

AECOM

Keystone
ENGINEERING GROUP
I-PAZ/FR, PENNSYLVANIA
(610) 407-4100
KOSLINET

LUMS POND WWTF MODIFICATIONS
STATE OF DELAWARE DEPARTMENT OF NATURAL RESOURCES
DIVISION OF PARKS AND RECREATION
Project No.: 60551786

E-01

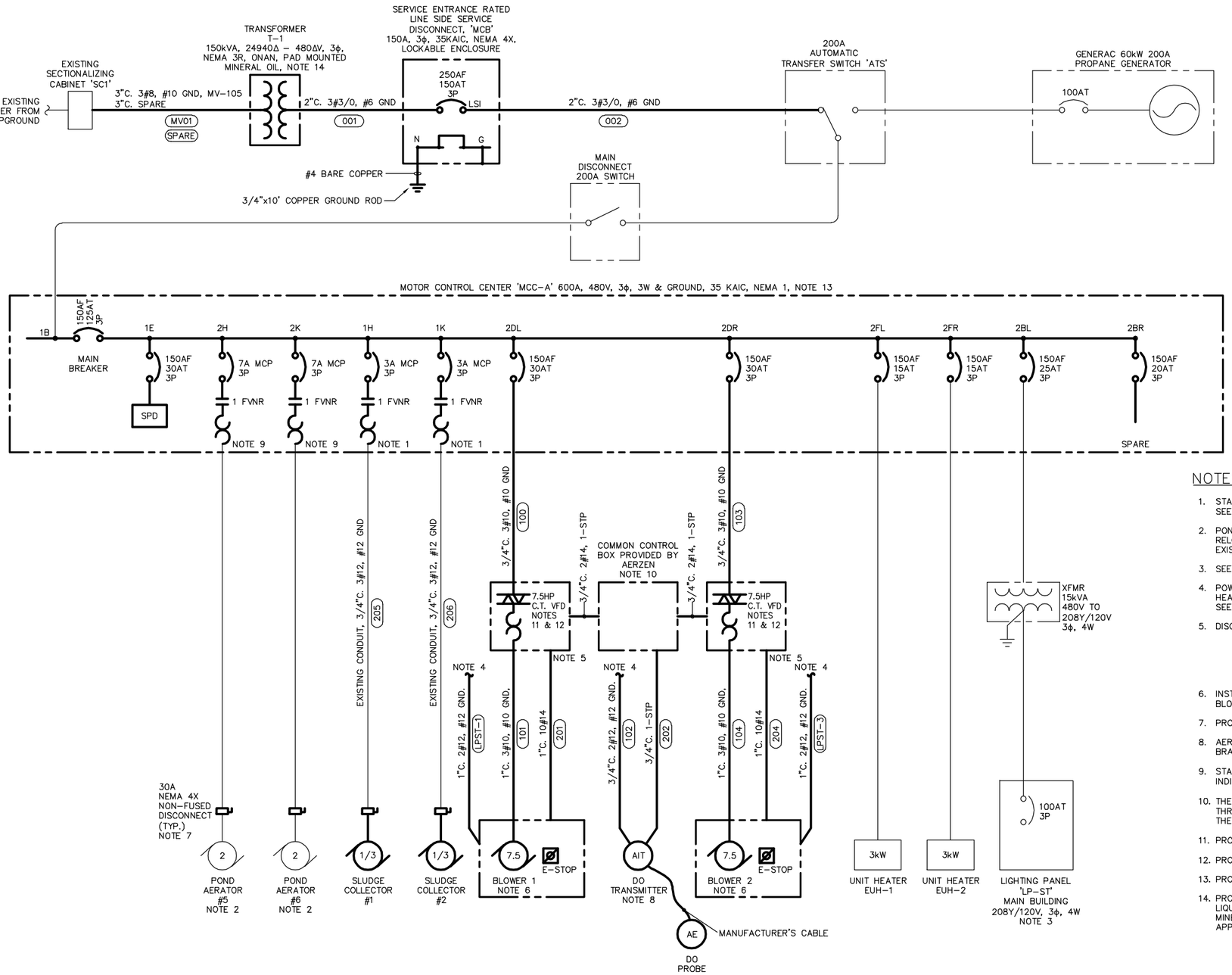

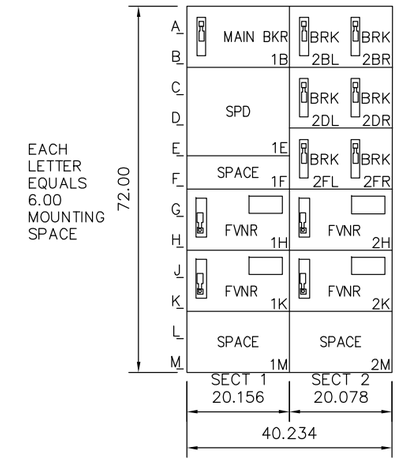

MCC–A DETAIL
N.T.S.

NOTES:

1. STARTERS TO INCLUDE START/STOP PUSHBUTTONS AND A RED RUN INDICATING LIGHT. SEE CONTROL DIAGRAMS ON E–04.
2. POND AERATORS #5 & #6 ARE CURRENTLY POWERED FROM LP–ST. REMOVE FEEDS AND RELOCATE TO NEW MCC. WIRE POND AERATORS FOR 480V, 3ϕ SERVICE. DEMOLISH EXISTING STARTERS AND REWIRE POND AERATORS TO EXISTING TIMER.
3. SEE LP–ST SCHEDULE ON DRAWING E–04.
4. POWER FEED FOR DO TRANSMITTER, BLOWER 1 SPACE HEATER, AND BLOWER 2 SPACE HEATER FROM LP1, BREAKER 1, 3, AND 5 ONCE POND AERATORS HAVE BEEN REMOVED. SEE LP–ST SCHEDULE ON DRAWING E–04.
5. DISCRETE INPUTS FROM BLOWERS TO VFDs:
   - E–STOP
   - INLET PRESSURE FAULT
   - DISCHARGE PRESSURE FAULT
   - DISCHARGE TEMPERATURE FAULT
   - MOTOR OVER TEMPERATURE FAULT
6. INSTALL 3/4" x 10' GROUND ROD EXOTHERMIC WELDED TO #2 BARE COPPER GROUND TO BLOWER ENCLOSURE GROUNDING LUG. SEE BLOWER GROUNDING DETAIL ON DRAWING E–04.
7. PROVIDE NEW DISCONNECT SWITCH WITH EXISTING CONDUIT AND WIRING.
8. AERZEN TO SUPPLY DO TRANSMITTER, DO PROBE, AND MOUNTING BRACKET. MOUNTING BRACKET TO ALLOW FOR PROBE TO BE MOVED BETWEEN BOTH TANKS.
9. STARTERS TO INCLUDE START/STOP PUSHBUTTONS, HOA SWITCH, AND A RED RUN INDICATING LIGHT. SEE CONTROL DIAGRAMS ON E–04.
10. THE COMMON CONTROL BOX WILL BE A MANUALLY OPERATED DOUBLE POLE/DOUBLE THROW SWITCH USED TO CLOSE THE RUN INTERLOCK OF THE SELECTED VFD AND DIRECT THE ANALOG SIGNAL FROM THE DO ANALYZER TO THE VFD.
11. PROVIDE 3/4"C. 2#14 FROM EXISTING TIMERS TO VFD RUN INTERLOCK IN PARALLEL.
12. PROVIDE BLOWER ALARMS FROM VFDs TO EXISTING ALARM PANEL.
13. PROVIDED BY OWNER, INSTALLED BY CONTRACTOR.
14. PROVIDE 150KVA TRANSFORMER WITH THE FOLLOWING SPECIFICATIONS: 24940–480V, LIQUID FILLED 120°C INSULATION CLASS, ALUMINUM WINDINGS, 65°C TEMPERATURE RISE, MINERAL OIL, ENERGY EFFICIENT PER DOE 2016; MANUFACTURED BY SQUARE D OR APPROVED EQUAL.

LEGEND

EXISTING

NEW

WILLIAM F. BLEILER
LICENSE
No. 17386
DELAWARE
PROFESSIONAL ENGINEER

E-02

Issue Status: FOR BID

AECOM

Keystone ENGINEERING GROUP
Franklin, Pennsylvania
(814) 437-4400
KEGI-INC1

LUMS POND WWTF MODIFICATIONS
STATE OF DELAWARE DEPARTMENT OF NATURAL RESOURCES
DIVISION OF PARKS AND RECREATION
Project No.: 60551786

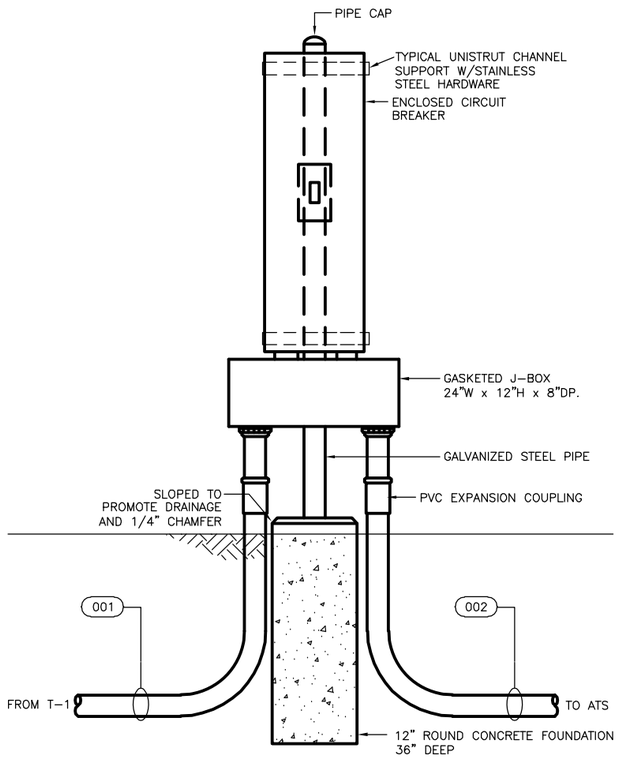

CIRCUIT BREAKER DETAIL

N.T.S.

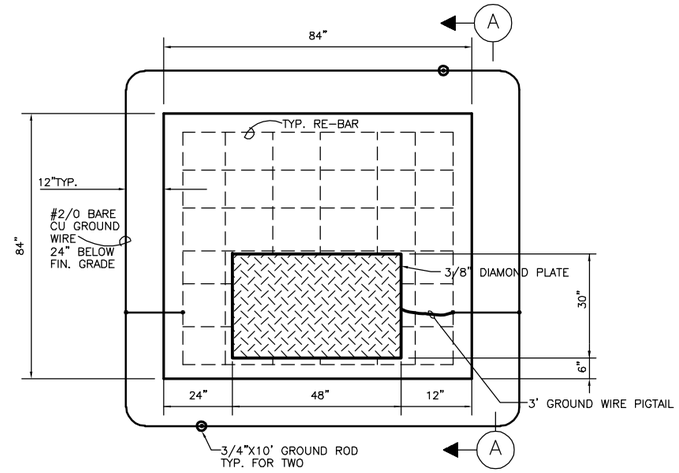

PADMOUNTED TRANSFORMER VAULT DETAIL

NOT TO SCALE

NOTE: PROVIDE PRECAST TRANSFORMER FOUNDATION AS MANUFACTURED BY MONARCH PRODUCTS COMPANY INC., OR APPROVED EQUAL.

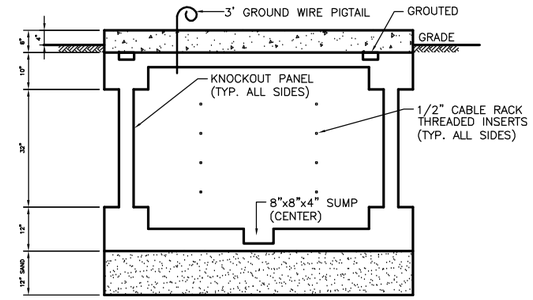

SECTION A–A

LEGEND

EXISTING

NEW

WILLIAM F. BLEILER
LICENSE
No. 17386
DELAWARE
PROFESSIONAL ENGINEER

Issue Status: FOR BID

AECOM

Keystone ENGINEERING GROUP

E-06

LUMS POND WWTF MODIFICATIONS
STATE OF DELAWARE DEPARTMENT OF NATURAL RESOURCES
DIVISION OF PARKS AND RECREATION
Project No.: 60551786