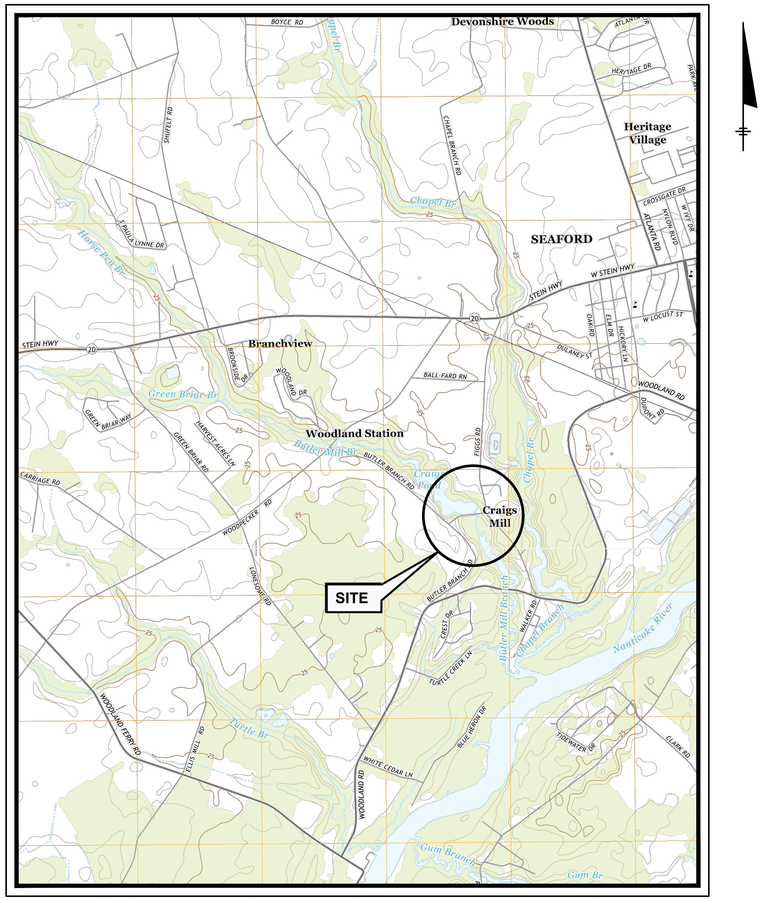

ADAPTED FROM: SEAFORD WEST, DE AND SHARPTOWN, MD U.S.G.S. 7.5 MIN. QUADS DATED 2014

SITE LOCATION MAP

SCALE: 1"=2,000'

CONTRACT DRAWINGS

IMPROVEMENTS TO DELAWARE DAMS

IMPROVEMENTS TO CRAIGS POND DAM

CONTRACT NO.: NAT17001-DAMCONST

STATE OF DELAWARE, DNREC
DIVISION OF WATERSHED STEWARDSHIP
DOVER, DELAWARE

FEBRUARY 2017

O'BRIEN & GERE

O'BRIEN & GERE ENGINEERS, INC.

ROBERT R. BOWERS REGISTERED No. 14412 DELAWARE PROFESSIONAL ENGINEER

ROBERT R. BOWERS, P.E.
DE. P.E. NO. 14412

IT IS A VIOLATION OF LAW FOR ANY PERSON UNLESS ACTING UNDER THE DIRECTION OF A LICENSED PROFESSIONAL ENGINEER TO ALTER THIS DOCUMENT.

12804.61925-000

I:\DE-DONREC.12804\61925.FLOOD-HAZ-MNGMN\DOCS\3-CRAIGS MILL POND\DWG\SHEETS\49818-CM-G000-FD.DWG, 02/02/2017 5:41PM

GENERAL ABBREVIATIONS

"A"

&	AND
@	AT
AB	ANCHOR BOLTS
ABBR.	ABBREVIATION
AC	ACRE
ACFM	ACTUAL CUBIC FEET PER MINUTE
ACI	AMERICAN CONCRETE INSTITUTE
ADD'L.	ADDITIONAL
ADJ.	ADJUSTABLE
AFF	ABOVE FINISHED FLOOR
AFG	ABOVE FINAL GRADE
AISC	AMERICAN INSTITUTE OF STEEL CONSTRUCTION
ALT.	ALTERNATE
ALUM.	ALUMINUM
ANSI	AMERICAN NATIONAL STANDARDS INSTITUTE
AOBE	AS ORDERED BY ENGINEER
APPD.	APPROVED
APPROX.	APPROXIMATE
ASCE	AMERICAN SOCIETY OF CIVIL ENGINEERS
ASPH.	ASPHALT
ASTM	AMERICAN SOCIETY FOR TESTING AND MATERIALS
AUTO	AUTOMATIC
AUX.	AUXILIARY
AVG.	AVERAGE
AWS	AMERICAN WELDING SOCIETY
AWWA	AMERICAN WATER WORKS ASSOCIATION

"B"

B/	BOTTOM OF
BAV	BALL VALVE
B/E	BOTTOM ELEVATION
BF	BLIND FLANGE
BFF	BELOW FINISHED FLOOR
BFG	BELOW FINISHED GRADE
BFP	BACK FLOW PREVENTER
BFV	BACK FLOW (PREVENTER) VALVE
BITM.	BITUMINOUS
BLDG.	BUILDING
BLK.	BLOCK
BM.	BEAM or BENCHMARK
BOC	BOTTOM OF CURB or BACK OF CURB
BOCA	BUILDING OFFICIAL'S & CODE ADMINISTRATION
BOF	BOTTOM OF FOOTING
BOP	BOTTOM OF PIPE
BOT.	BOTTOM
BOW	BOTTOM OF WALL
BRG.	BEARING
BRK.	BRICK
BS	BOTH SIDES
BSMT.	BASEMENT
BV	BUTTERFLY VALVE
BW	BUTT WELD

"C"

CANTIL.	CANTILEVER
CB	CATCH BASIN
C/C	CENTER TO CENTER
CEM.	CEMENT
CEM MORT	CEMENT MORTAR
CF	CUBIC FEET
CFM	CUBIC FEET PER MINUTE
CFS	CUBIC FEET PER SECOND
CHAN.	CHANNEL
CI	CAST IRON
CISP	CAST IRON SOIL PIPE
CJ	CONTROL JOINT
℄	CENTERLINE
CLR.	CLEAR
CMH	COMMUNICATION MANHOLE
CMP	CORRUGATED METAL PIPE
CMU	CONCRETE MASONRY UNIT
CO	CLEAN OUT
COL.	COLUMN
COMBO.	COMBINATION
COMPT.	COMPARTMENT
CONC.	CONCRETE
CONN.	CONNECTION
CONST.	CONSTRUCTION
CONST. JT.	CONSTRUCTION JOINT
CONT.	CONTINUE or CONTINUOUS
CONT'D.	CONTINUED
CONTR.	CONTRACT or CONTRACTOR
CONTR. JT.	CONTRACTION JOINT
COORD.	COORDINATE
CORR.	CORRIDOR
CORRUG.	CORRUGATED
CPC	CHLORINATED POLYVINYL CHLORIDE
CRS.	COURSE
CS	CARBON STEEL or CASCADE STEPS
CSES.	COURSES
CSP	CORRUGATED STEEL PIPE
CTR.	CENTER
Cu.	COPPER
CU.	CUBIC
CV	CHECK VALVE
CX	CONNECT TO EXISTING
CY	CUBIC YARD

"D"

D	DRAIN
DEG.	DEGREE
DEMO.	DEMOLISH or DEMOLITION
DEPT.	DEPARTMENT
DESCR.	DESCRIPTION
DET.	DETAIL
DI	DUCTILE IRON
DIA. or ø	DIAMETER
DIAG.	DIAGONAL or DIAGRAM
DIM.	DIMENSION
DIP	DUCTILE IRON PIPE

"D"

DISCH.	DISCHARGE
DIV.	DIVISION
DN.	DOWN
DP	DIFFERENTIAL PRESSURE
DPCO	DECK PLATE CLEAN OUT
DPDT	DOUBLE POLE DOUBLE THROW
DPST	DOUBLE POLE SINGLE THROW
D/S	DOWN STREAM
DV	DIAPHRAGM VALVE
DWG.	DRAWING
DWL.	DOWEL

"E"

E.	EAST
EA.	EACH
ECV	ELECTRIC CHECK VALVE
EF	EACH FACE
EJ	EXPANSION JOINT
EL.	ELEVATION
ELEC.	ELECTRIC or ELECTRICAL
ELEV.	ELEVATION
ELL.	ELBOW
EMBED.	EMBEDMENT
EMER.	EMERGENCY
EMH	ELECTRIC MANHOLE
ENGR.	ENGINEER
ENT.	ENTRANCE
EO	ELECTRIC OPERATOR
EOP	EDGE OF PAVEMENT
EOS	EDGE OF SHOULDER
EQ.	EQUAL
EQUIP.	EQUIPMENT
EQUIV.	EQUIVALENT
ETR	EXISTING TO REMAIN
EW	EACH WAY
EX.orEXIST.	EXISTING
EXC.	EXCAVATION
EXP	EXPANSION or EXPOSED
EXP. STR.	EXPOSED STRUCTURE

"F"

F/	FACE OF
FD	FLOOR DRAIN
FDN.	FOUNDATION
F1E	FLANGE ONE END
FEE	FLANGED EACH END
FF	FINISH FLOOR
F/F	FACE TO FACE
FFE	FINISH FLOOR ELEVATION
FG	FINISHED GRADE
FH	FIRE HYDRANT
FIG.	FIGURE
FILL	FILL LINE
FIN.	FINISH
FL	FLOOR
FLG.	FLANGE
FLV	FLAP VALVE
FM	FORCE MAIN
FOC	FACE OF CONCRETE
FPM	FEET PER MINUTE
FPS	FEET PER SECOND
FR.	FRAME
FRC	FIBER REINFORCED CONCRETE
FS	FAR SIDE
FT	FEET or FOOT
FTG.	FOOTING
FUT.	FUTURE
FV	FIELD VERIFY
F/W	FACE OF WALL

"G"

GAL.	GALLON(S)
GALV.	GALVANIZED
GB	GRADE BEAM
GEN	GENERAL
GLV	GLOBE VALVE
GOVT.	GOVERNMENT
GPH	GALLONS PER HOUR
GPM	GALLONS PER MINUTE
GR	GRADE OR GUARD RAIL OR GUIDE RAIL
GRTG.	GRATING
GS	GALVANIZED STEEL
GV	GATE VALVE
GVL.	GRAVEL
GW.	GROUNDWATER

"H"

HDPE	HIGH DENSITY POLYETHYLENE
HDW.	HARDWARE
HGT.	HEIGHT
HORIZ.	HORIZONTAL
HP	HORSE POWER
HPT	HIGH POINT
HS	HIGH STRENGTH
HT.	HEIGHT
HV	HAND VALVE
HYD.	HYDRANT

"I"

ID	IDENTIFICATION NUMBER or INSIDE DIAMETER
IF	INSIDE FACE
IN	INCH or INCHES or INVERT
INCL	INCLUDED or INCLUDING
IND.	INDUSTRIAL
INFO.	INFORMATION
INSUL.	INSULATED or INSULATION
IP	IRON PIPE
IPF	IRON PIN FOUND

"J"

JST.	JOIST
JT.	JOINT

"K"

K.	KIPS (1K = 1000 POUNDS)
KCMIL	THOUSAND CIRCULAR MILS
KFT	KIP FOOT
K–FT	KIPS PER FOOT
KGV	KNIFE GATE VALVE
KSF	KIPS PER SQUARE FOOT

"L"

L.	ANGLE
LB.	POUND
LBS.	POUNDS
LDPE	LOW DENSITY POLYETHYLENE
LF	LINEAR FEET
LG	LENGTH or LONG
LONGIT.	LONGITUDINAL
LP	LIGHT POLE
LPT	LOW POINT
LR	LONG RADIUS
LT.	LEFT
LW.	LIGHTWEIGHT
LWIC	LIGHT WEIGHT INSULATING CONCRETE

"M"

M.	MAIN CONTRACTOR
MAN.	MANUAL
MAS.	MASONRY
MATL.	MATERIAL
MAX.	MAXIMUM
MD	METAL DECK
MECH.	MECHANICAL
MEZZ.	MEZZANINE
MFD.	MANUFACTURED
MFG.	MANUFACTURING
MFR.	MANUFACTURER
MGD	MILLION GALLONS PER DAY
MH	MANHOLE
MIN.	MINIMUM
MISC.	MISCELLANEOUS
MO	MASONRY OPENING
MOD.	MODIFICATION
MON.	MONUMENT
MOV	MOTOR OPERATED VALVE
MTD.	MOUNTED
MTL.	METAL
MV	MUD VALVE
MW	MONITORING WELL

"N"

N.	NORTH or NORTHING
N/A	NOT APPLICABLE
NAT.	NATURAL
NC	NORMALLY CLOSED
NE	NORTH EAST
NF	NEAR FACE
NIC	NOT IN CONTRACT
NO or #	NORMALLY OPEN or NUMBER
NOM.	NOMINAL
NOR.	NORMAL
NPT	NATIONAL PIPE THREAD
NRS	NON–RISING STEM
NS	NEAR SIDE
NTS	NOT TO SCALE
NW	NORTH WEST

"O"

OC	ON CENTER
OD	OUTSIDE DIAMETER
OF	OUTSIDE FACE
OFALL.	OUTFALL
OFCI	OWNER FURNISHED CONTRACTOR INSTALLED
OFOI	OWNER FURNISHED OWNER INSTALLED
OH.	OVERHEAD
OHE	OVERHEAD ELECTRIC
OPNG.	OPENING
OPP.	OPPOSITE
OSHA	OCCUPATIONAL SAFETY AND HEALTH ADMINISTRATION
OVFLOW.	OVERFLOW
OZ.	OUNCE

"P"

PAR.	PARALLEL
PCP	PRECAST CONCRETE PLANK
PE	POLYETHYLENE
PERF.	PERFORATED
PF	PARSHALL FLUME
PI	POINT OF INTERSECTION
PIV	PINCH VALVE
PL	PROPERTY LINE
PLV	PLUG VALVE
PLWD.	PLYWOOD
PNT.	POINT
POC	POINT OF CONNECTION
PP	POLYPROPYLENE
PREFAB.	PREFABRICATED
PRI.	PRIMARY
PROP.	PROPOSED
PSF	POUNDS PER SQUARE FOOT
PSI	POUNDS PER SQUARE INCH
PT	PRESSURE TREATED
PV	PLUG VALVE
PVC	POLYVINYL CHLORIDE
PVT	PAVEMENT

"Q"

QTY.	QUANTITY
QUAL.	QUALITY

"R"

R	RADIUS or RISER
RCP	REINFORCED CONCRETE PIPE
RD	ROAD
RECT.	RECTANGLE or RECTANGULAR
RED.	REDUCE or REDUCER
REM.	REMOVABLE
REF.	REFERENCE
REINF.	REINFORCE
REQ'D.	REQUIRED
REV.	REVISED or REVISION
RM.	ROOM
RO	ROUGH OPENING
ROW	RIGHT–OF–WAY
RR	RAILROAD
RT	RIGHT
RX	REMOVE EXISTING

"S"

S	SIGN or SOUTH
SAN.	SANITARY
S/C	SITE/CIVIL
SCFM	STANDARD CUBIC FEET PER MINUTE
SCH.	SCHEDULE
SD	STORM DRAIN
SE	SOUTH EAST
SEC.	SECOND or SECONDARY
SECT.	SECTION
SEW.	SEWER
SF	SILT FENCE or SQUARE FOOT
SHT.	SHEET
SICPP	SMOOTH INTERIOR CORRUGATED POLYETHYLENE PIPE
SIG	SLIDE GATE
SIM.	SIMILAR
SIST	STORM INLET SEDIMENT TRAP
SJ	STEEL JOIST
SMH	STORM MANHOLE
SOLV WLD	SOLVENT WELDED
SPEC.	SPECIFICATION
SQ.	SQUARE
SS	SANITARY SEWER or STAINLESS STEEL
SSD	SUB–SOIL DRAIN
ST	STORM or STREET
STA.	STATION
STD.	STANDARD
STIFF.	STIFFENER
STL.	STEEL
STRUCT.	STRUCTURAL
STS	STORM SEWER
SUG	SLUICE GATE
SUSP	SUSPEND or SUSPENDED
SW	SOUTH WEST or SIDEWALK
SWM	STORM WATER MANAGEMENT
SYM.	SYMMETRICAL or SYMMETRICALLY

"T"

T.	TANGENT or TOP
T/	TOP OF
T&B	TOP AND BOTTOM
TBR	TO BE REMOVED
T/EL	TOP ELEVATION
T&G	TONGUE AND GROOVE
TGL	THEORETICAL GRADE LINE
THK.	THICK
THRD.	THREADED
TMH	TELEPHONE MANHOLE
TOB	TOP OF BLOCK
TOC	TOP OF CURB
TOF	TOP OF FOOTING
TOL.	TOLERANCE
TOP	TOP OF PIPE or TOP OF PLANK
TOS	TOP OF SLAB or TOP OF STEEL
TOT.	TOTAL
TOW	TOP OF WALL
TYP.	TYPICAL

"U"

UD	UNDER DRAIN
UG.	UNDERGROUND
UGE	UNDERGROUND ELECTRIC
U.N.O.	UNLESS NOTED OTHERWISE
U/S	UNDERSIDE OR UP STREAM
USGS	UNITED STATES GEOLOGICAL SURVEY

"V"

VC	VITRIFIED CLAY
VERT.	VERTICAL
VIF	VERIFY IN FIELD
VOL.	VOLUME

"W"

W	WATER or WEST
W/	WITH
W/O	WITHOUT
WD.	WOOD
WF	WIDE FLANGE
WG	WEIR GATE
WLD	WELD OR WELDED
WS	WATERSTOP
WT	WATER TABLE or WEIGHT
WWF	WELDED WIRE FABRIC

"X"

XS	EXTRA STRONG

"Y"

YD.	YARD
YR.	YEAR

INDEX OF DRAWINGS

SHT NO.	TITLE	REVISION
000	TITLE SHEET	REV. B
	GENERAL	
G–1	ABBREVIATIONS, DRAWING INDEX & METHODS OF SECTIONING	REV. B
G–2	EXISTING CONDITIONS SITE PLAN	REV. B
G–3	DEMOLITION PLAN	REV. B
G–4	PROPOSED IMPROVEMENTS SITE PLAN	REV. B
G–5	PROPOSED IMPROVEMENTS CONTROL & GEOMETRY PLAN	REV. B
G–6	PROPOSED IMPROVEMENTS SECTIONS AND DETAILS	REV. B
G–7	EROSION & SEDIMENTATION CONTROL PLAN	REV. B
G–8	EROSION & SEDIMENTATION CONTROL NOTES AND DETAILS SHEET 1	REV. B
G–9	EROSION & SEDIMENTATION CONTROL NOTES AND DETAILS SHEET 2	REV. B
	STRUCTURAL	
S–1	STRUCTURAL GENERAL NOTES & SPECIFICATIONS	REV. B
S–2	GATE BOX & BRIDGE FOUNDATION PLAN & SECTIONS	REV. B
S–3	GATE BOX FOUNDATION & CONCRETE REINFORCING PLANS & SECTIONS	REV. B
S–4	MISCELLANEOUS STRUCTURAL SECTIONS & DETAILS SHEET 1	REV. B
S–5	MISCELLANEOUS STRUCTURAL SECTIONS & DETAILS SHEET 2	REV. B
S–6	NEW BOAT RAMP DETAILS	REV. B
	MECHANICAL	
M–1	NEW GATES, TRASH RACK & STOP LOG GUIDE DETAILS	REV. B
	REFERENCE DRAWINGS	
REF–1	BORING LOGS	–

METHOD OF SECTIONING AND DETAILING

THE DRAWING UPON WHICH A SECTION, VIEW, OR DETAIL HAS BEEN TAKEN AND THE DRAWING UPON WHICH THE SECTION, VIEW, OR DETAIL HAS BEEN SHOWN IS CROSS–REFERENCED WITH SYMBOLS AS FOLLOWS.

DRAWING WHERE SECTION IS TAKEN

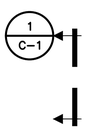

THE DESIGNATION IN THE UPPER HALF OF THE CIRCLE IS THE SECTION NUMBER. THE BOTTOM DESIGNATION REFERS TO THE DRAWING NUMBER ON WHICH THE SECTION CAN BE FOUND.

DRAWING WHERE DETAIL IS TAKEN

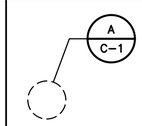

THE DESIGNATION IN THE UPPER HALF OF THE CIRCLE IS THE DETAIL LETTER. THE BOTTOM DESIGNATION REFERS TO THE DRAWING NUMBER ON WHICH THE DETAIL CAN BE FOUND.

DRAWING WHERE SECTION IS SHOWN

SECTION
SCALE

THIS IS SHOWN UNDER EACH SECTION. THE TOP DESIGNATION IS THE SECTION NUMBER. THE BOTTOM DESIGNATION REFERS TO THE DRAWING NUMBER WHERE THE SECTION HAS BEEN TAKEN.

DRAWING WHERE DETAIL IS SHOWN

DETAIL
SCALE

THIS IS SHOWN UNDER EACH DETAIL. THE TOP DESIGNATION IS THE DETAIL LETTER. THE BOTTOM DESIGNATION REFERS TO THE DRAWING NUMBER WHERE THE DETAIL HAS BEEN TAKEN.

ROBERT R. BOWERS REGISTERED No. 14412 DELAWARE PROFESSIONAL ENGINEER

ROBERT R. BOWERS, P.E.
DE. P.E. NO. 14412

IT IS A VIOLATION OF LAW FOR ANY PERSON, UNLESS ACTING UNDER THE DIRECTION OF A LICENSED ENGINEER, TO ALTER THIS DOCUMENT.

THIS DRAWING WAS PREPARED AT THE SCALE INDICATED. INACCURACIES IN THE STATED SCALE MAY BE INTRODUCED WHEN DRAWINGS ARE REPRODUCED BY ANY MEANS. USE THE GRAPHIC SCALE BAR TO DETERMINE THE ACTUAL SCALE.

IN CHARGE OF RRB
DESIGNED BY MAD
CHECKED BY DRP
DRAWN BY MK

NO.	DATE	REVISION	INT.
0	02/02/2017	ISSUED FOR BID	RRB

O'BRIEN & GERE ENGINEERS, INC
EAST NORRITON, PA

STATE OF DELAWARE DNREC
DIVISION OF WATERSHED STEWARDSHIP
IMPROVEMENTS TO DELAWARE DAMS
DOVER, DELAWARE

DNREC CONTRACT No.: NAT17001-DAMCONST

GENERAL
IMPROVEMENTS TO CRAIGS POND DAM
ABBREVIATIONS, DRAWING INDEX & METHOD OF SECTIONING

FILE NO. 12804.61925 - G01
DATE 02/02/2017

G-1

SAVED: 12/6/16 1:36 PM
I:\DE-DONREC.12804\61925.FLOOD-HAZ-MNGMN\DOCS\3-CRAIGS MILL PONDDWG\SHEETS\49818-CM-G01-FD.DWG

SAVED: 7/14/16 5:07 PM

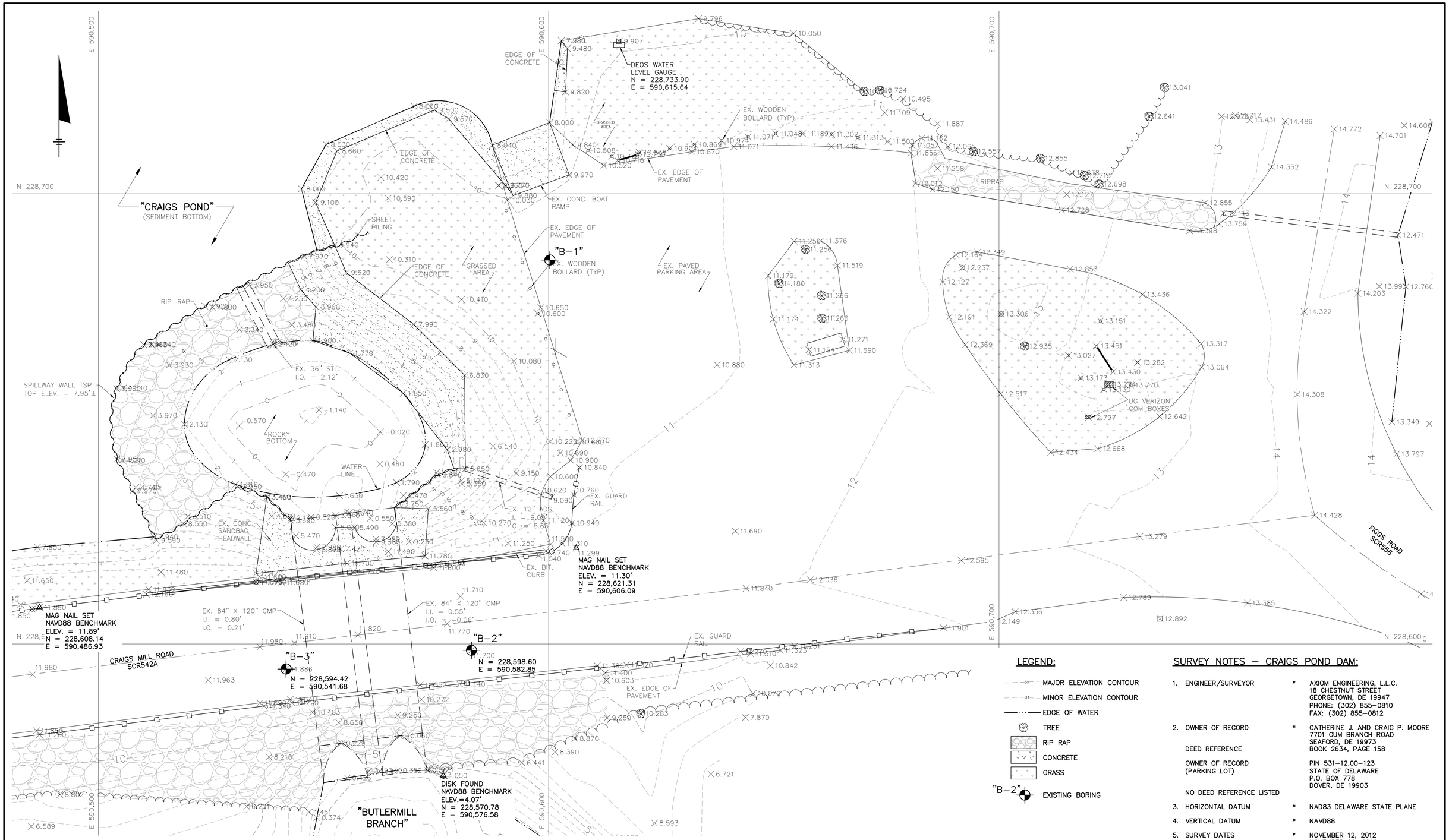

LEGEND:

- MAJOR ELEVATION CONTOUR
- MINOR ELEVATION CONTOUR
- EDGE OF WATER
- TREE
- RIP RAP
- CONCRETE
- GRASS
- "B-2" EXISTING BORING

SURVEY NOTES – CRAIGS POND DAM:

1. ENGINEER/SURVEYOR * AXIOM ENGINEERING, L.L.C.
   18 CHESTNUT STREET
   GEORGETOWN, DE 19947
   PHONE: (302) 855-0810
   FAX: (302) 855-0812
2. OWNER OF RECORD * CATHERINE J. AND CRAIG P. MOORE
   7701 GUM BRANCH ROAD
   SEAFORD, DE 19973
   BOOK 2634, PAGE 158

   DEED REFERENCE

   OWNER OF RECORD (PARKING LOT)

   PIN 531-12.00-123
   STATE OF DELAWARE
   P.O. BOX 778
   DOVER, DE 19903

   NO DEED REFERENCE LISTED
3. HORIZONTAL DATUM * NAD83 DELAWARE STATE PLANE
4. VERTICAL DATUM * NAVD88
5. SURVEY DATES * NOVEMBER 12, 2012
   NOVEMBER 20, 2012
   JANUARY 30, 2013

1"=10' 10 0 10 20

IT IS A VIOLATION OF LAW FOR ANY PERSON, UNLESS ACTING UNDER THE DIRECTION OF A LICENSED ENGINEER, TO ALTER THIS DOCUMENT.

THIS DRAWING WAS PREPARED AT THE SCALE INDICATED. INACCURACIES IN THE STATED SCALE MAY BE INTRODUCED WHEN DRAWINGS ARE REPRODUCED BY ANY MEANS. USE THE GRAPHIC SCALE BAR TO DETERMINE THE ACTUAL SCALE.

ROBERT R. BOWERS REGISTERED No. 14412 DELAWARE PROFESSIONAL ENGINEER

ROBERT R. BOWERS, P.E.
DE. P.E. NO. 14412

IN CHARGE OF	RRB
DESIGNED BY	SMS
CHECKED BY	DRP
DRAWN BY	MK

NO.	DATE	REVISION	INT.
0	02/02/2017	ISSUED FOR BID	RRB

O'BRIEN & GERE ENGINEERS, INC
EAST NORRITON, PA

STATE OF DELAWARE DNREC
DIVISION OF WATERSHED STEWARDSHIP
IMPROVEMENTS TO DELAWARE DAMS
DOVER, DELAWARE

DNREC CONTRACT No.: NAT17001-DAMCONST

GENERAL
IMPROVEMENTS TO CRAIGS POND DAM
EXISTING CONDITIONS SITE PLAN

FILE NO. 12804.61925 - G02

DATE 02/02/2017

G-2

I:\DE-DONREC.12804\61925.FLOOD-HAZ-MNGMN\DOCS\3-CRAIGS MILL PONDDWG\SHEETS\49818-CM-G02-FD.DWG

SAVED: 8/31/16 2:07 PM

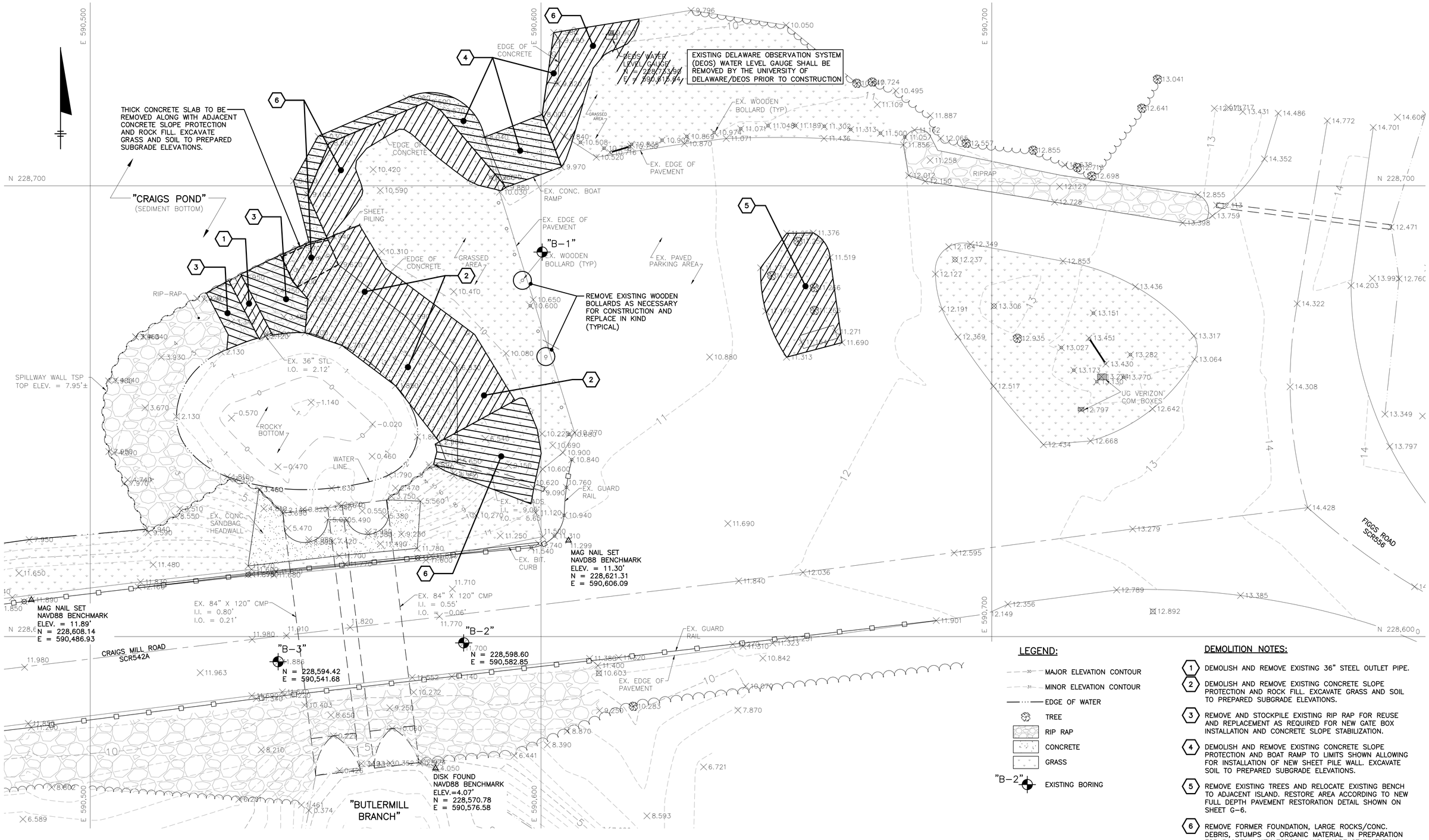

LEGEND:

- MAJOR ELEVATION CONTOUR
- MINOR ELEVATION CONTOUR
- EDGE OF WATER
- TREE
- RIP RAP
- CONCRETE
- GRASS
- "B-2" EXISTING BORING

DEMOLITION NOTES:

1. DEMOLISH AND REMOVE EXISTING 36" STEEL OUTLET PIPE.
2. DEMOLISH AND REMOVE EXISTING CONCRETE SLOPE PROTECTION AND ROCK FILL. EXCAVATE GRASS AND SOIL TO PREPARED SUBGRADE ELEVATIONS.
3. REMOVE AND STOCKPILE EXISTING RIP RAP FOR REUSE AND REPLACEMENT AS REQUIRED FOR NEW GATE BOX INSTALLATION AND CONCRETE SLOPE STABILIZATION.
4. DEMOLISH AND REMOVE EXISTING CONCRETE SLOPE PROTECTION AND BOAT RAMP TO LIMITS SHOWN ALLOWING FOR INSTALLATION OF NEW SHEET PILE WALL. EXCAVATE SOIL TO PREPARED SUBGRADE ELEVATIONS.
5. REMOVE EXISTING TREES AND RELOCATE EXISTING BENCH TO ADJACENT ISLAND. RESTORE AREA ACCORDING TO NEW FULL DEPTH PAVEMENT RESTORATION DETAIL SHOWN ON SHEET G-6.
6. REMOVE FORMER FOUNDATION, LARGE ROCKS/CONC. DEBRIS, STUMPS OR ORGANIC MATERIAL IN PREPARATION FOR BACKFILL WITH TOPSOIL AND SLOPE STABILIZATION MATTING.

1"=10' 10 0 10 20

ROBERT R. BOWERS REGISTERED PROFESSIONAL ENGINEER No. 14412 DELAWARE

ROBERT R. BOWERS, P.E.
DE. P.E. NO. 14412

IT IS A VIOLATION OF LAW FOR ANY PERSON, UNLESS ACTING UNDER THE DIRECTION OF A LICENSED ENGINEER, TO ALTER THIS DOCUMENT.

THIS DRAWING WAS PREPARED AT THE SCALE INDICATED. INACCURACIES IN THE STATED SCALE MAY BE INTRODUCED WHEN DRAWINGS ARE REPRODUCED BY ANY MEANS. USE THE GRAPHIC SCALE BAR TO DETERMINE THE ACTUAL SCALE.

IN CHARGE OF RRB				
DESIGNED BY SMS				
CHECKED BY DRP				
DRAWN BY MK	0	02/02/2017	ISSUED FOR BID	RRB
	NO.	DATE	REVISION	INT.

O'BRIEN & GERE ENGINEERS, INC
EAST NORRITON, PA

STATE OF DELAWARE DNREC
DIVISION OF WATERSHED STEWARDSHIP
IMPROVEMENTS TO DELAWARE DAMS
DOVER, DELAWARE

DNREC CONTRACT No.: NAT17001-DAMCONST

GENERAL
IMPROVEMENTS TO CRAIGS POND DAM

DEMOLITION PLAN

FILE NO. 12804.61925 - G03

DATE 02/02/2017

G-3

I:\DE-DONREC.12804\61925.FLOOD-HAZ-MNGMN\DOCS\3-CRAIGS MILL PONDDWG\SHEETS\49818-CM-G03-FD.DWG

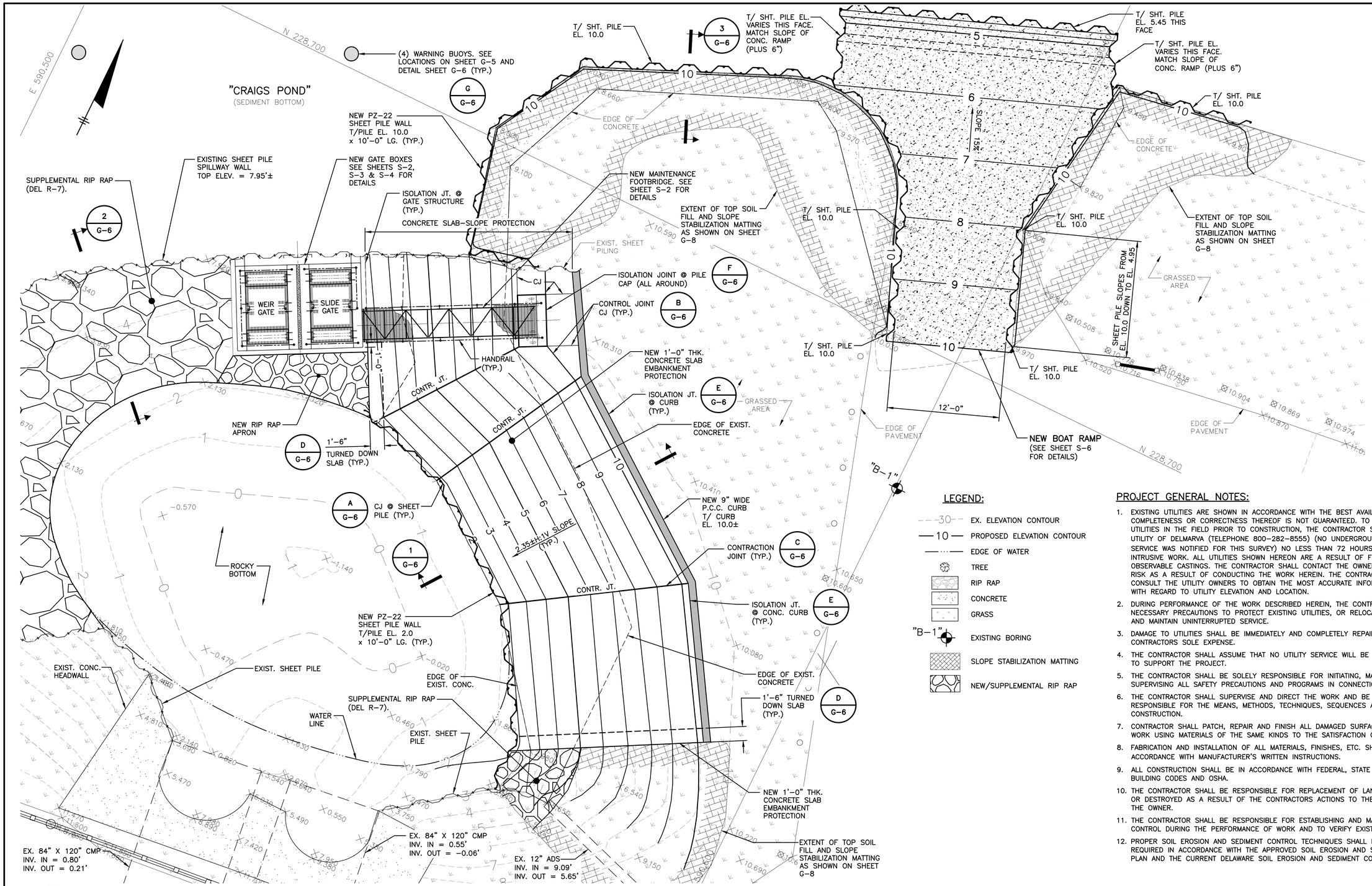

LEGEND:

- EX. ELEVATION CONTOUR
- PROPOSED ELEVATION CONTOUR
- EDGE OF WATER
- TREE
- RIP RAP
- CONCRETE
- GRASS
- EXISTING BORING
- SLOPE STABILIZATION MATTING
- NEW/SUPPLEMENTAL RIP RAP

PROJECT GENERAL NOTES:

1. EXISTING UTILITIES ARE SHOWN IN ACCORDANCE WITH THE BEST AVAILABLE INFORMATION. COMPLETENESS OR CORRECTNESS THEREOF IS NOT GUARANTEED. TO LOCATE EXISTING UTILITIES IN THE FIELD PRIOR TO CONSTRUCTION, THE CONTRACTOR SHALL CONTACT MISS UTILITY OF DELMARVA (TELEPHONE 800-282-8555) (NO UNDERGROUND UTILITY LOCATION SERVICE WAS NOTIFIED FOR THIS SURVEY) NO LESS THAN 72 HOURS PRIOR TO INITIATING INTRUSIVE WORK. ALL UTILITIES SHOWN HEREON ARE A RESULT OF FIELD-LOCATED OBSERVABLE CASTINGS. THE CONTRACTOR SHALL CONTACT THE OWNERS OF UTILITIES AT RISK AS A RESULT OF CONDUCTING THE WORK HEREIN. THE CONTRACTOR SHALL CONSULT THE UTILITY OWNERS TO OBTAIN THE MOST ACCURATE INFORMATION AVAILABLE WITH REGARD TO UTILITY ELEVATION AND LOCATION.
2. DURING PERFORMANCE OF THE WORK DESCRIBED HEREIN, THE CONTRACTOR SHALL TAKE NECESSARY PRECAUTIONS TO PROTECT EXISTING UTILITIES, OR RELOCATE AS NECESSARY, AND MAINTAIN UNINTERRUPTED SERVICE.
3. DAMAGE TO UTILITIES SHALL BE IMMEDIATELY AND COMPLETELY REPAIRED AT THE CONTRACTORS SOLE EXPENSE.
4. THE CONTRACTOR SHALL ASSUME THAT NO UTILITY SERVICE WILL BE PROVIDED ON-SITE TO SUPPORT THE PROJECT.
5. THE CONTRACTOR SHALL BE SOLELY RESPONSIBLE FOR INITIATING, MAINTAINING AND SUPERVISING ALL SAFETY PRECAUTIONS AND PROGRAMS IN CONNECTION WITH THE WORK.
6. THE CONTRACTOR SHALL SUPERVISE AND DIRECT THE WORK AND BE SOLELY RESPONSIBLE FOR THE MEANS, METHODS, TECHNIQUES, SEQUENCES AND PROCEDURES OF CONSTRUCTION.
7. CONTRACTOR SHALL PATCH, REPAIR AND FINISH ALL DAMAGED SURFACES CAUSED BY THE WORK USING MATERIALS OF THE SAME KINDS TO THE SATISFACTION OF THE OWNER.
8. FABRICATION AND INSTALLATION OF ALL MATERIALS, FINISHES, ETC. SHALL BE IN ACCORDANCE WITH MANUFACTURER'S WRITTEN INSTRUCTIONS.
9. ALL CONSTRUCTION SHALL BE IN ACCORDANCE WITH FEDERAL, STATE AND LOCAL BUILDING CODES AND OSHA.
10. THE CONTRACTOR SHALL BE RESPONSIBLE FOR REPLACEMENT OF LANDSCAPE DAMAGED OR DESTROYED AS A RESULT OF THE CONTRACTORS ACTIONS TO THE SATISFACTION OF THE OWNER.
11. THE CONTRACTOR SHALL BE RESPONSIBLE FOR ESTABLISHING AND MAINTAINING SURVEY CONTROL DURING THE PERFORMANCE OF WORK AND TO VERIFY EXISTING GRADES.
12. PROPER SOIL EROSION AND SEDIMENT CONTROL TECHNIQUES SHALL BE IMPLEMENTED AS REQUIRED IN ACCORDANCE WITH THE APPROVED SOIL EROSION AND SEDIMENT CONTROL PLAN AND THE CURRENT DELAWARE SOIL EROSION AND SEDIMENT CONTROL HANDBOOK.

ROBERT R. BOWERS REGISTERED No. 14412 DELAWARE PROFESSIONAL ENGINEER

ROBERT R. BOWERS, P.E.
DE. P.E. NO. 14412

IT IS A VIOLATION OF LAW FOR ANY PERSON, UNLESS ACTING UNDER THE DIRECTION OF A LICENSED ENGINEER, TO ALTER THIS DOCUMENT.

THIS DRAWING WAS PREPARED AT THE SCALE INDICATED. INACCURACIES IN THE STATED SCALE MAY BE INTRODUCED WHEN DRAWINGS ARE REPRODUCED BY ANY MEANS. USE THE GRAPHIC SCALE BAR TO DETERMINE THE ACTUAL SCALE.

IN CHARGE OF RRB				
DESIGNED BY MAD				
CHECKED BY DRP				
DRAWN BY MK	0	02/02/2017	ISSUED FOR BID	RRB
	NO.	DATE	REVISION	INT.

O'BRIEN & GERE ENGINEERS, INC
EAST NORRITON, PA

STATE OF DELAWARE DNREC
DIVISION OF WATERSHED STEWARDSHIP
IMPROVEMENTS TO DELAWARE DAMS
DOVER, DELAWARE

DNREC CONTRACT No.: NAT17001-DAMCONST

GENERAL
IMPROVEMENTS TO CRAIGS POND DAM
PROPOSED IMPROVEMENTS
SITE PLAN

FILE NO. 12804.61925 - G04

DATE 02/02/2017

G-4

SAVED: 12/7/16 6:27 PM

I:\DE-DONREC.12804\61925.FLOOD-HAZ-MNGM\NDOCS\3-CRAIGS MILL POND\DWGS\SHEETS\49819-CM-G04-FD.DWG

SAVED: 12/7/16 6:41 PM

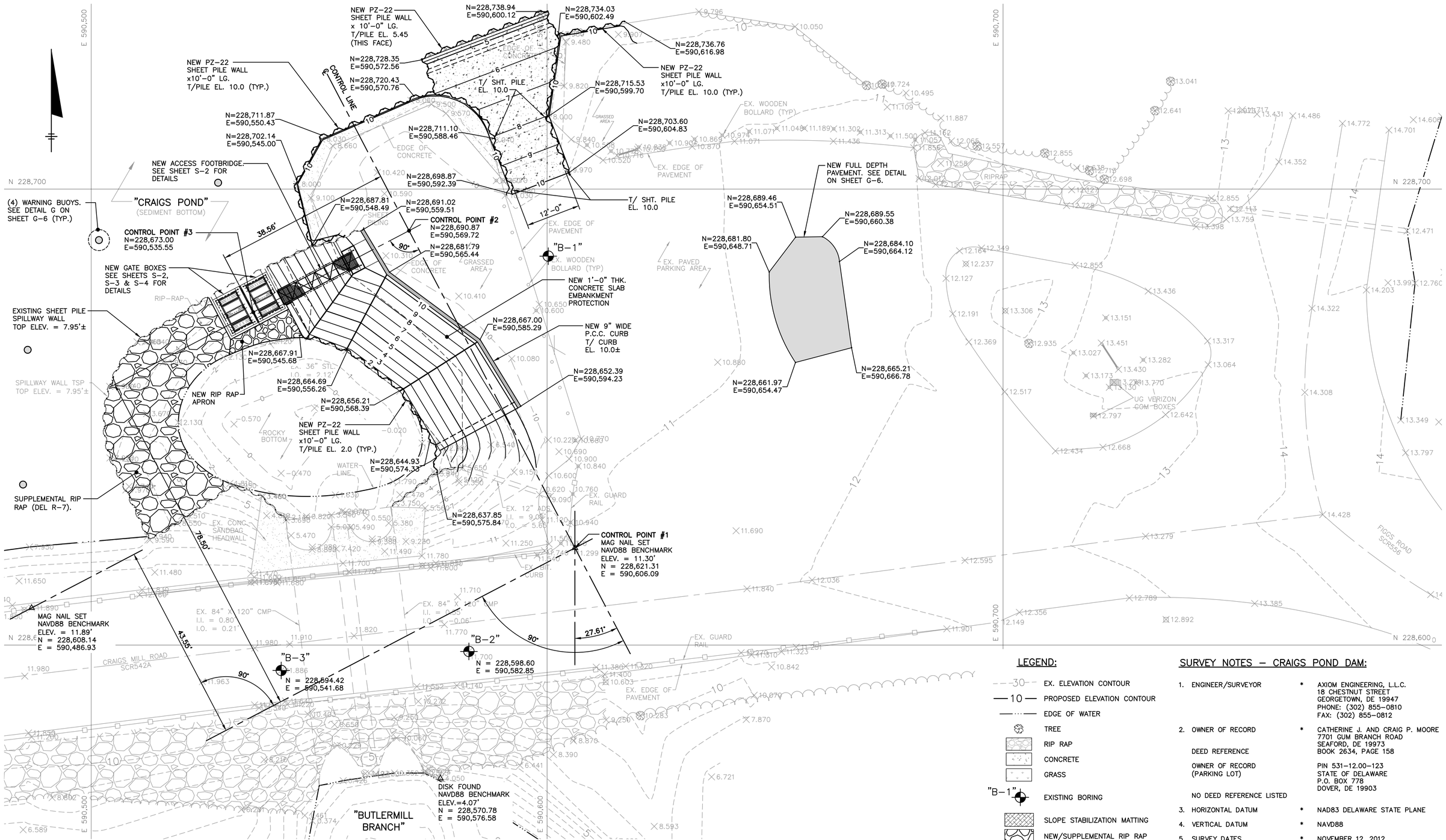

LEGEND:

- 30 — EX. ELEVATION CONTOUR
- 10 — PROPOSED ELEVATION CONTOUR
- EDGE OF WATER
- TREE
- RIP RAP
- CONCRETE
- GRASS
- "B-1" EXISTING BORING
- SLOPE STABILIZATION MATTING
- NEW/SUPPLEMENTAL RIP RAP
- NEW CONCRETE RAMP

SURVEY NOTES – CRAIGS POND DAM:

1. ENGINEER/SURVEYOR * AXIOM ENGINEERING, L.L.C. 18 CHESTNUT STREET GEORGETOWN, DE 19947 PHONE: (302) 855-0810 FAX: (302) 855-0812
2. OWNER OF RECORD * CATHERINE J. AND CRAIG P. MOORE 7701 GUM BRANCH ROAD SEAFORD, DE 19973
   DEED REFERENCE BOOK 2634, PAGE 158
   OWNER OF RECORD (PARKING LOT) PIN 531-12.00-123 STATE OF DELAWARE P.O. BOX 778 DOVER, DE 19903
   NO DEED REFERENCE LISTED
3. HORIZONTAL DATUM * NAD83 DELAWARE STATE PLANE
4. VERTICAL DATUM * NAVD88
5. SURVEY DATES * NOVEMBER 12, 2012 NOVEMBER 20, 2012 JANUARY 30, 2013

1"=10' 10 0 10 20

ROBERT R. BOWERS REGISTERED PROFESSIONAL ENGINEER No. 14412 DELAWARE

ROBERT R. BOWERS, P.E.
DE. P.E. NO. 14412

IT IS A VIOLATION OF LAW FOR ANY PERSON, UNLESS ACTING UNDER THE DIRECTION OF A LICENSED ENGINEER, TO ALTER THIS DOCUMENT.

THIS DRAWING WAS PREPARED AT THE SCALE INDICATED. INACCURACIES IN THE STATED SCALE MAY BE INTRODUCED WHEN DRAWINGS ARE REPRODUCED BY ANY MEANS. USE THE GRAPHIC SCALE BAR TO DETERMINE THE ACTUAL SCALE.

IN CHARGE OF RRB				
DESIGNED BY SMS				
CHECKED BY DRP				
DRAWN BY MK	0	02/02/2017	ISSUED FOR BID	RRB
	NO.	DATE	REVISION	INT.

O'BRIEN & GERE ENGINEERS, INC
EAST NORRITON, PA

STATE OF DELAWARE DNREC
DIVISION OF WATERSHED STEWARDSHIP
IMPROVEMENTS TO DELAWARE DAMS
DOVER, DELAWARE

DNREC CONTRACT No.: NAT17001-DAMCONST

GENERAL
IMPROVEMENTS TO CRAIGS POND DAM
PROPOSED IMPROVEMENTS
CONTROL & GEOMETRY PLAN

FILE NO. 12804.61925 - G05

DATE 02/02/2017

G-5

I:\DE-DONREC\12804\61925\FLOOD-HAZ\MGN\DOCS\3-CRAIGS MILL POND\DWG\SHEETS\49818-CM-G05-FD.DWG

SAVED: 8/31/16 2:33 PM

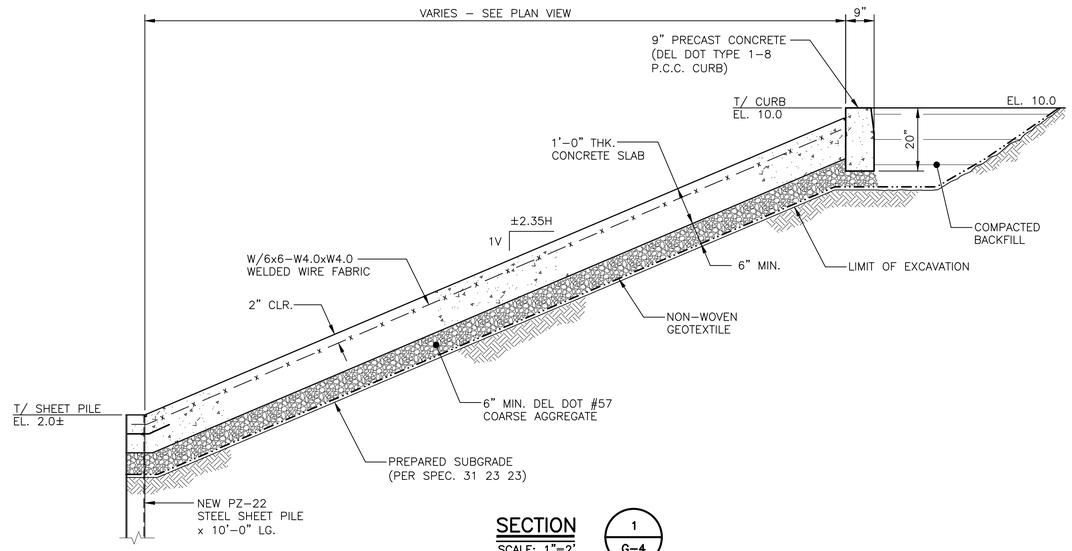

SECTION 1/G-4
SCALE: 1"=2'

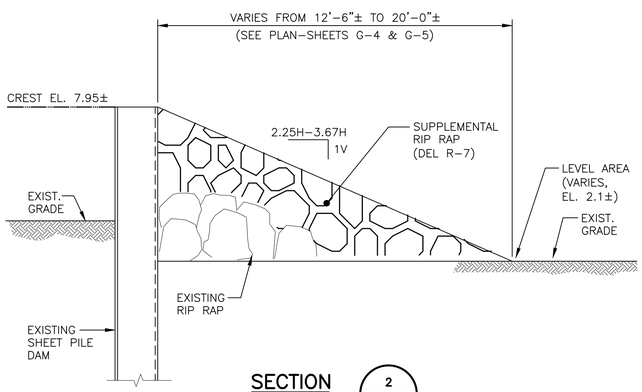

SECTION 2/G-4
SCALE: 3/8"=1'–0"

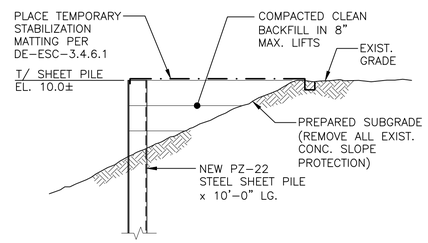

SECTION 3/G-4
SCALE: 1"=2'

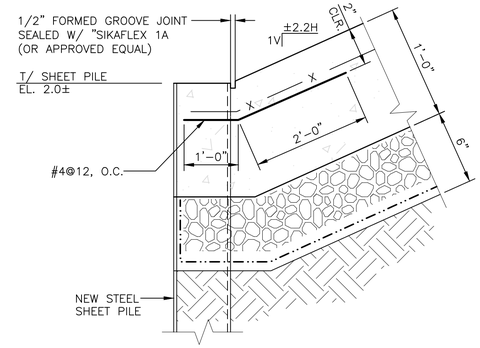

CONTROL JOINT @ SHEET PILE
DETAIL A/G-4
SCALE: 1–1/2"=1'–0"

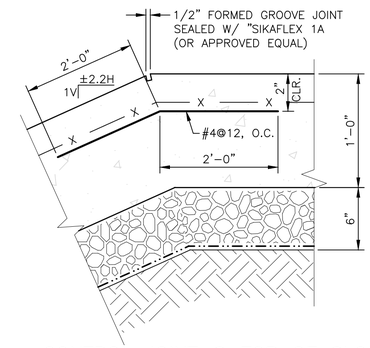

CONTROL JOINT @ TOP OF SLOPE
DETAIL B/G-4
SCALE: 1–1/2"=1'–0"

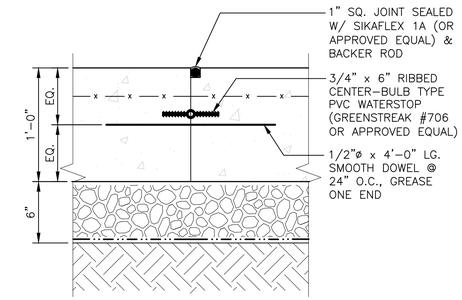

CONTRACTION JOINT
DETAIL C/G-4
SCALE: 1–1/2"=1'–0"

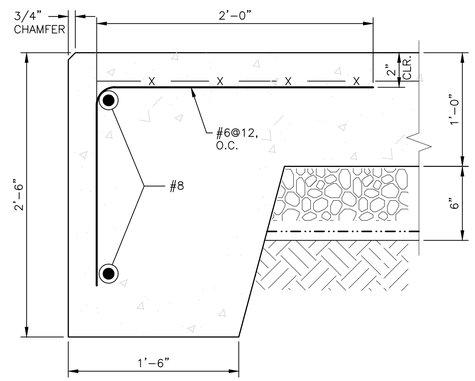

SLAB TURN DOWN
DETAIL D/G-4
SCALE: 1–1/2"=1'–0"

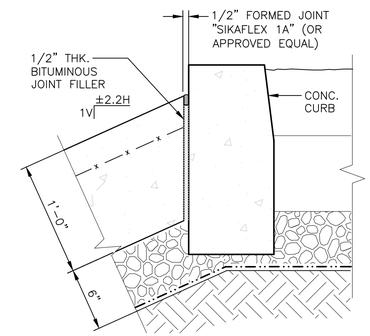

ISOLATION JOINT @ CONC. CURB
DETAIL E/G-4
SCALE: 1–1/2"=1'–0"

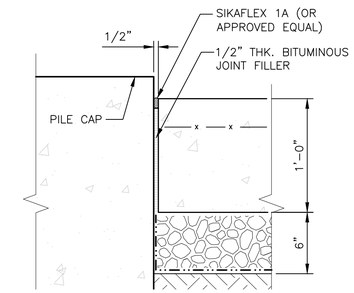

ISOLATION JOINT @ PILE CAP
DETAIL F/G-4
SCALE: 1–1/2"=1'–0"

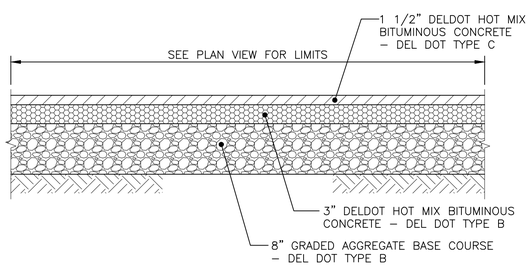

NEW FULL DEPTH PAVING DETAIL
SCALE: 1"=1'–0"

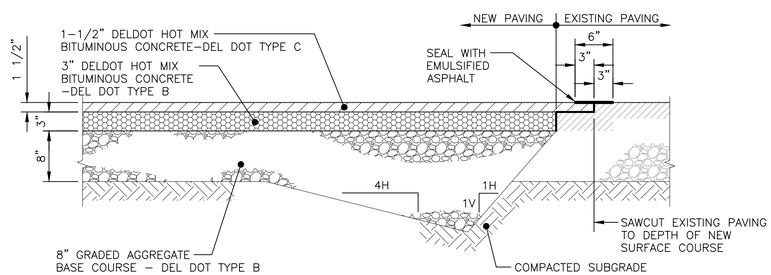

NEW FULL DEPTH PAVING TIE–IN TO EXISTING PAVING DETAIL
SCALE: 1"=1'–0"

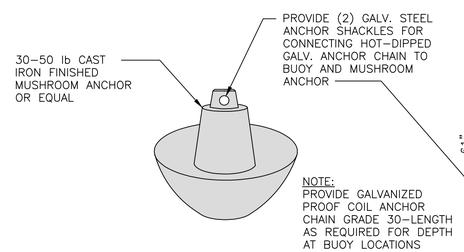

BUOY ANCHOR DETAIL
NOT TO SCALE

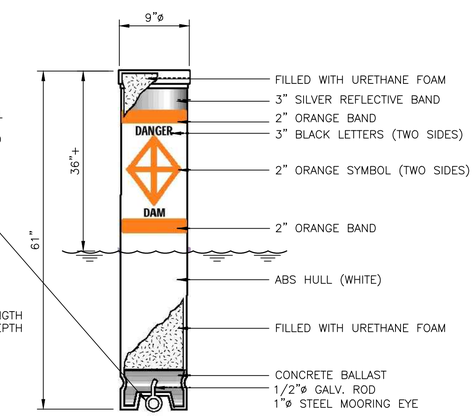

WARNING BUOY DETAIL G/G-4
NOT TO SCALE

1"=2' 2 0 2 4
3/8"=1'–0" 1 0 1 2 3 4 5 6 7
1"=1'–0" 1 0 1 2
1 1/2"=1'–0" 1 .5 0 1

IT IS A VIOLATION OF LAW FOR ANY PERSON, UNLESS ACTING UNDER THE DIRECTION OF A LICENSED ENGINEER, TO ALTER THIS DOCUMENT.

THIS DRAWING WAS PREPARED AT THE SCALE INDICATED. INACCURACIES IN THE STATED SCALE MAY BE INTRODUCED WHEN DRAWINGS ARE REPRODUCED BY ANY MEANS. USE THE GRAPHIC SCALE BAR TO DETERMINE THE ACTUAL SCALE.

ROBERT R. BOWERS, P.E.
DE. P.E. NO. 14412

IN CHARGE OF RRB				
DESIGNED BY MAD				
CHECKED BY DRP				
DRAWN BY MK	0	02/02/2017	ISSUED FOR BID	RRB
	NO.	DATE	REVISION	INT.

O'BRIEN & GERE ENGINEERS, INC
EAST NORRITON, PA

STATE OF DELAWARE DNREC
DIVISION OF WATERSHED STEWARDSHIP
IMPROVEMENTS TO DELAWARE DAMS
DOVER, DELAWARE

DNREC CONTRACT No.: NAT17001-DAMCONST

GENERAL
IMPROVEMENTS TO CRAIGS POND DAM
PROPOSED IMPROVEMENTS
SECTIONS & DETAILS

FILE NO. 12804.61925 - G06
DATE 02/02/2017

G-6

I:\DE-DONREC_12804\61925 FLOOD-HAZ-MNGMN\DOCS\3-CRAIGS MILL POND\DWG\SHEETS\49818-CM-G06-FD.DWG

SAVED: 12/7/16 6:47 PM

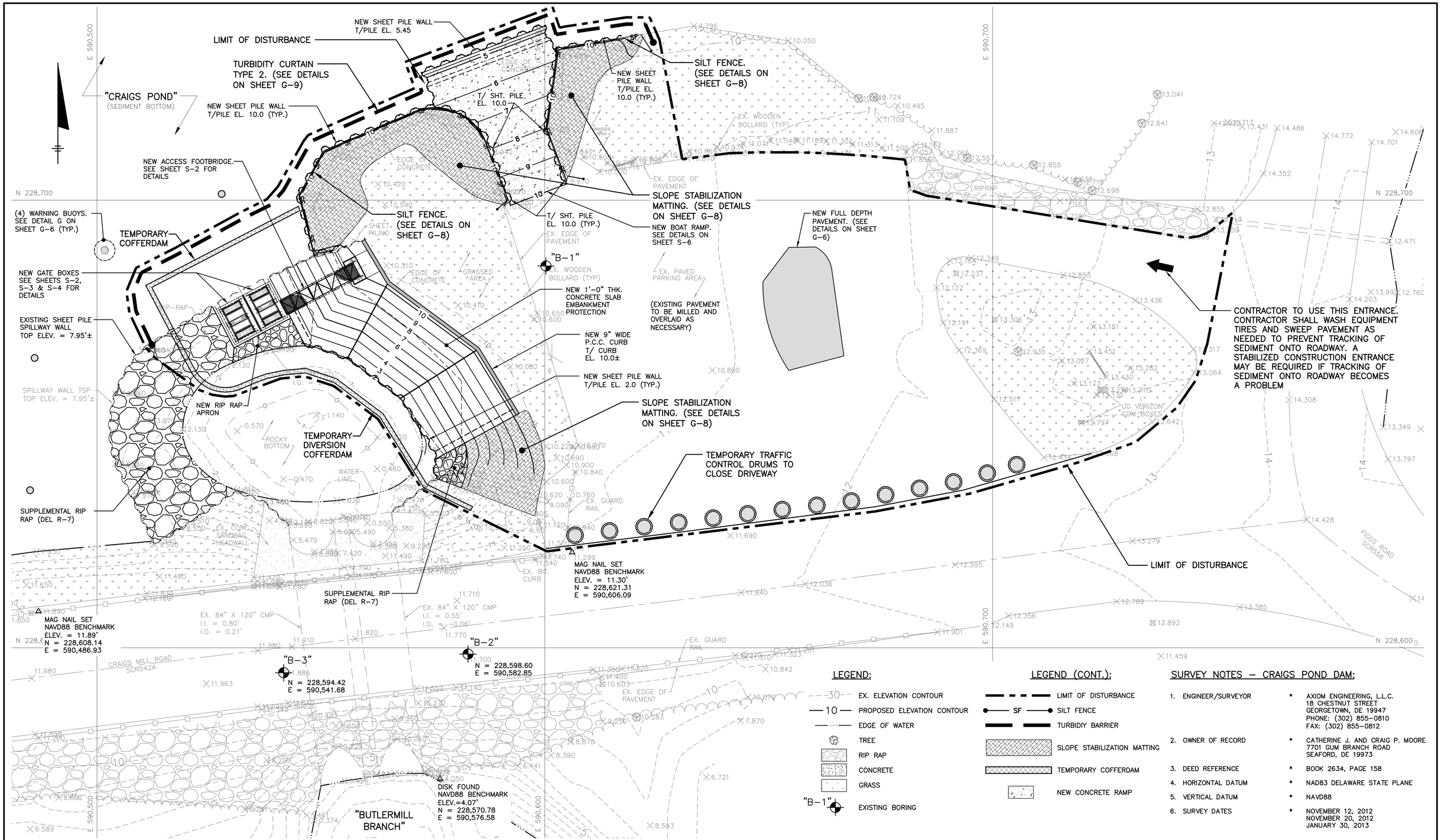

LEGEND:

- EX. ELEVATION CONTOUR
- PROPOSED ELEVATION CONTOUR
- EDGE OF WATER
- TREE
- RIP RAP
- CONCRETE
- GRASS
- "B-1" EXISTING BORING

LEGEND (CONT.):

- LIMIT OF DISTURBANCE
- SF SILT FENCE
- TURBIDIY BARRIER
- SLOPE STABILIZATION MATTING
- TEMPORARY COFFERDAM
- NEW CONCRETE RAMP

SURVEY NOTES – CRAIGS POND DAM:

1. ENGINEER/SURVEYOR * AXIOM ENGINEERING, L.L.C. 18 CHESTNUT STREET GEORGETOWN, DE 19947 PHONE: (302) 855-0810 FAX: (302) 855-0812
2. OWNER OF RECORD * CATHERINE J. AND CRAIG P. MOORE 7701 GUM BRANCH ROAD SEAFORD, DE 19973
3. DEED REFERENCE * BOOK 2634, PAGE 158
4. HORIZONTAL DATUM * NAD83 DELAWARE STATE PLANE
5. VERTICAL DATUM * NAVD88
6. SURVEY DATES * NOVEMBER 12, 2012 NOVEMBER 20, 2012 JANUARY 30, 2013

1"=10' 10 0 10 20

ROBERT R. BOWERS REGISTERED No. 14412 DELAWARE PROFESSIONAL ENGINEER

ROBERT R. BOWERS, P.E.
DE. P.E. NO. 14412

IT IS A VIOLATION OF LAW FOR ANY PERSON, UNLESS ACTING UNDER THE DIRECTION OF A LICENSED ENGINEER, TO ALTER THIS DOCUMENT.

THIS DRAWING WAS PREPARED AT THE SCALE INDICATED. INACCURACIES IN THE STATED SCALE MAY BE INTRODUCED WHEN DRAWINGS ARE REPRODUCED BY ANY MEANS. USE THE GRAPHIC SCALE BAR TO DETERMINE THE ACTUAL SCALE.

IN CHARGE OF RRB				
DESIGNED BY SMS				
CHECKED BY DRP				
DRAWN BY MK	0	02/02/2017	ISSUED FOR BID	RRB
	NO.	DATE	REVISION	INT.

O'BRIEN & GERE ENGINEERS, INC
EAST NORRITON, PA

STATE OF DELAWARE DNREC
DIVISION OF WATERSHED STEWARDSHIP
IMPROVEMENTS TO DELAWARE DAMS
DOVER, DELAWARE

DNREC CONTRACT No.: NAT17001-DAMCONST

GENERAL
IMPROVEMENTS TO CRAIGS POND DAM
EROSION & SEDIMENTATION CONTROL PLAN

FILE NO. 12804.61925 -G07

DATE 02/02/2017

G-7

I:\DE-DNREC.12804\61925.FLOOD-HAZ-MNGMN\DOCS\3-CRAIGS MILL POND\DWGS\SHEETS\49819-CIA-G07-FD.DWG

SAVED: 12/28/16 2:50 PM

EROSION AND SEDIMENT CONTROL NOTES

1. ALL SEDIMENT AND EROSION CONTROL PRACTICES SHALL BE CONSTRUCTED IN ACCORDANCE WITH THE CURRENT DELAWARE EROSION AND SEDIMENT CONTROL HANDBOOK.
2. DNREC HAS OBTAINED ALL NECESSARY ENVIRONMENTAL PERMITS. CONSTRUCTION SHALL BEGIN AFTER THE RECEIPT OF ALL NECESSARY FEDERAL, STATE, COUNTY AND LOCAL PERMITS. THE CONTRACTOR IS RESPONSIBLE FOR ENSURING THAT ALL PERMITS HAVE BEEN OBTAINED AND THAT COPIES ARE AVAILABLE ON THE PROJECT SITE. THE CONTRACTOR IS RESPONSIBLE FOR PERFORMING ANY PRE–CONSTRUCTION NOTIFICATIONS REQUIRED AS GENERAL OR SPECIAL CONDITIONS OF ANY PERMIT.
3. AT LEAST SEVEN (7) DAYS BEFORE STARTING ANY EARTH DISTURBANCE ACTIVITIES, THE CONTRACTOR SHALL INVITE ANY AND ALL SUBCONTRACTORS INVOLVED IN THOSE ACTIVITIES, THE LANDOWNERS, THE EROSION AND SEDIMENTATION CONTROL PLAN PREPARER AND THE DELAWARE DEPARTMENT OF NATURAL RESOURCES AND ENVIRONMENTAL CONTROL (DNREC) SEDIMENT AND STORMWATER PROGRAM TO A PRE–CONSTRUCTION MEETING ON THE PROJECT SITE.
4. ANY CONCERNS BY THE CONTRACTOR REGARDING THE PROPOSED EROSION AND SEDIMENT CONTROL PLANS AND/OR DETAILS MUST BE SUBMITTED AT THE PRE–CONSTRUCTION MEETING. ANY DEVIATION FROM THE APPROVED EROSION AND SEDIMENT CONTROL PLANS REQUIRES WRITTEN APPROVAL BY DNREC.
5. IF THE APPROVED PLAN NEEDS TO BE MODIFIED, ADDITIONAL SEDIMENT AND STORMWATER CONTROLS MAY BE REQUIRED AS DEEMED NECESSARY BY DNREC.
6. AT LEAST THREE (3) WORKING DAYS BEFORE STARTING ANY EARTH DISTURBANCE ACTIVITIES, ALL CONTRACTORS INVOLVED IN THOSE ACTIVITIES SHALL NOTIFY MISS–UTILITY OF DELMARVA (TELEPHONE 811) 800–282–8555 OR 800–441–8355 FOR BURIED UTILITY LOCATIONS.
7. REVIEW AND/OR APPROVAL OF THE EROSION AND SEDIMENT CONTROL PLAN(S) SHALL NOT RELIEVE THE CONTRACTOR FROM RESPONSIBILITY FOR COMPLIANCE WITH THE REQUIREMENTS OF THE SEDIMENT AND STORMWATER REGULATIONS, NOR SHALL IT RELIEVE THE CONTRACTOR FROM ANY ERRORS OR OMISSIONS IN THE APPROVED PLANS.
8. ALL APPLICABLE EROSION AND SEDIMENT CONTROL PRACTICES MUST BE IN PLACE PRIOR TO ANY EARTH DISTURBANCE ACTIVITIES, INCLUDING CLEARING AND GRUBBING, EXCAVATION, GRADING OR UTILITY WORK.
9. THE DNREC SEDIMENT AND STORMWATER PROGRAM MUST BE NOTIFIED AT LEAST FIVE (5) WORKING DAYS PRIOR TO THE START OF EARTH DISTURBANCE ACTIVITIES. FAILURE TO DO SO CONSTITUTES A VIOLATION OF DELAWARE SEDIMENT AND STORMWATER REGULATIONS.
10. THE LIMITS OF DISTURBANCE (LOD) LINE IS TO BE STAKED BY THE CONTRACTOR AS SHOWN ON THE FINAL APPROVED E&S PLANS PRIOR TO ANY DISTURBANCE.
11. FOLLOWING SOIL DISTURBANCE OR REDISTURBANCE, PERMANENT OR TEMPORARY STABILIZATION CONTROLS SHALL BE COMPLETED WITHIN FOURTEEN (14) CALENDAR DAYS.
12. THE CONTRACTOR WILL BE RESPONSIBLE TO PROVIDE A RESPONSIBLE INSPECTOR WITH A CERTIFICATION OF TRAINING AT A DNREC SPONSORED OR APPROVED TRAINING COURSE FOR THE CONTROL OF EROSION AND SEDIMENT DURING CONSTRUCTION (I.E. A BLUE CARD HOLDER). THE BLUE CARD HOLDER SHALL PREPARE AN INSPECTION REPORT AFTER EACH INSPECTION. REPORTS SHALL INCLUDE THE DATE THAT ALL IDENTIFIED DEFICIENCIES MUST BE RESOLVED AND ARE TO BE SIGNED BY THE BLUE CARD HOLDER. INSPECTION REPORTS SHALL BE EMAILED OR FAXED TO THE CONTRACTOR, ENGINEER AND TO THE DNREC SEDIMENT AND STORMWATER PROGRAM OR AS DIRECTED AT THE PRECONSTRUCTION MEETING.
13. ANY REQUEST TO DEVIATE FROM THE WEEKLY INSPECTIONS MUST BE APPROVED IN WRITING BY DNREC.
14. ANY ERODED AREAS SHALL BE STABILIZED AND ANY ACCUMULATED SEDIMENT SHALL BE REMOVED AND DISPOSED OF IN AN APPROPRIATE MANNER.

SEQUENCE OF CONSTRUCTION

THE FOLLOWING IS A GENERAL SEQUENCE OF CONSTRUCTION INTENDED AS A GENERAL OUTLINE OF EARTH DISTURBANCE ACTIVITIES AND INSTALLATION OF EROSION AND SEDIMENTATION CONTROL MEASURES. THE CONTRACTOR MAY ADJUST THE TIMING AND SEQUENCE OF CERTAIN ACTIVITIES AS NECESSARY, PROVIDED THAT THE INTENDED EROSION CONTROL MEASURES ARE IN PLACE AND FUNCTIONAL PRIOR TO EARTH DISTURBANCE ACTIVITIES OCCURRING.

1. DELINEATE APPROVED LIMITS OF DISTURBANCE WITH SURVEY STAKES AND FLAGS OR ORANGE CONSTRUCTION FENCING. CONTRACTOR SHALL NOT PERFORM ANY EARTH DISTURBANCE ACTIVITIES OUTSIDE OF THE APPROVED LIMITS OF DISTURBANCE.
2. INSTALL TEMPORARY TRAFFIC CONTROL MEASURES TO CLOSE THE EXISTING PARKING AREA AND INSTALL STABILIZED CONSTRUCTION ENTRANCE AS INDICATED ON THE APPROVED SOIL EROSION AND SEDIMENT CONTROL PLANS.
3. INSTALL TURBIDITY BARRIER IN CRAIGS POND AROUND PROJECT AREA.
4. INSTALL TEMPORARY COFFERDAM UPSTREAM OF THE EXISTING SHEET PILE SPILLWAY FOR DEWATERING AND DOWNSTREAM DIVERSION TO DIVERT FLOW OVER THE SPILLWAY AROUND THE PROJECT SITE.
5. REMOVE EXISTING LOW LEVEL OUTLET PIPE AND DEMOLISH PORTION OF SHEET PILE SPILLWAY WALL. EXCAVATE AS NECESSARY TO PREPARE FOUNDATION OF NEW OUTLET STRUCTURE.
6. INSTALL PILE FOUNDATIONS FOR NEW OUTLET STRUCTURE AND WALKWAY. INSTALL CONCRETE PILE CAPS.
7. INSTALL NEW OUTLET STRUCTURE AND GATES ACCORDING TO APPROVED PLANS AND DETAILS.
8. REMOVE EXISTING CONCRETE SLOPE PROTECTION. DRIVE NEW SHEET PILE ALONG TOE OF SLOPE. EXCAVATE AND INSTALL NEW AGGREGATE BASE COURSE AND CONCRETE SLOPE PROTECTION. INSTALL NEW CONCRETE CURB AT TOP OF SLOPE AND INSTALL SILT FENCE IMMEDIATELY ABOVE CONCRETE CURB.
9. INSTALL NEW STEEL WALKWAY AND HANDRAILS.
10. ONCE NEW OUTLET STRUCTURE AND GATES HAVE BEEN TESTED FOR WATERTIGHTNESS AND PROPER FUNCTION, REMOVE TEMPORARY UPSTREAM COFFERDAM AND DOWNSTREAM DIVERSION.
11. REMOVE TREES AND LARGE SHRUBS DOWNSTREAM OF THE SHEET PILE SPILLWAY. DO NOT GRUB OR REMOVE ROOT BALLS DURING THIS OPERATION. PLACE ADDITIONAL RIP RAP ACCORDING TO THE APPROVED PLANS AND DETAILS. THIS WORK MAY BE PERFORMED IN THE WET.
12. DRIVE NEW SHEET PILE ALONG TOE OF SLOPE ADJACENT TO BOAT RAMP.
13. CLEAR AND GRUB VEGETATION ADJACENT TO BOAT RAMP. STRIP TOPSOIL AND STOCKPILE IN APPROVED LOCATION.
14. EXCAVATE AND INSTALL NEW BOAT RAMP ACCORDING TO APPROVED PLANS AND DETAILS. REGRADE SLOPES AND STABILIZE WITH TOPSOIL, SEEDING AND EROSION CONTROL BLANKETS. INSTALL SILT FENCE IMMEDIATELY ADJACENT TO THE SHEET PILE WALL.
15. CLEAR TREES WITHIN ISLAND IN THE CENTER OF THE PARKING AREA. EXCAVATE TO REMOVE ROOTS AND INSTALL NEW AGGREGATE SUBBASE AND BITUMINOUS PAVEMENT.
16. SWEEP REMAINING EXISTING PAVEMENT AND DELINEATE AREAS FOR REPAIR. REMOVE STABILIZED CONSTRUCTION ENTRANCE AND REPAIR PAVEMENT. PERFORM MILL AND OVERLAY OF PARKING AREA AS NECESSARY.
17. INSTALL DAM WARNING BUOYS AND PERFORM ANY ADDITIONAL REPAIRS TO FENCING OR LANDSCAPED AREAS AS NEEDED.
18. ONCE ALL DISTURBED AREAS HAVE ACHIEVED PERMANENT STABILIZATION CONSISTING OF A MINIMUM 80% UNIFORM PERENNIAL VEGETATIVE COVER OR OTHER PERMANENT NON–VEGETATIVE COVER, NOTIFY DNREC CONSTRUCTION REVIEWER TO SCHEDULE FINAL SITE INSPECTION. UPON AUTHORIZATION OF THE CONSTRUCTION REVIEWER REMOVE ALL REMAINING TEMPORARY SOIL EROSION AND SEDIMENT CONTROL BMP'S INCLUDING SILT FENCE, TURBIDITY BARRIER, ETC. ANY AREA DISTURBED DURING THE REMOVAL OF A TEMPORARY BMP SHALL BE IMMEDIATELY STABILIZED WITH SEEDING AND STRAW MULCH.

Standard Detail & Specifications
Silt Fence

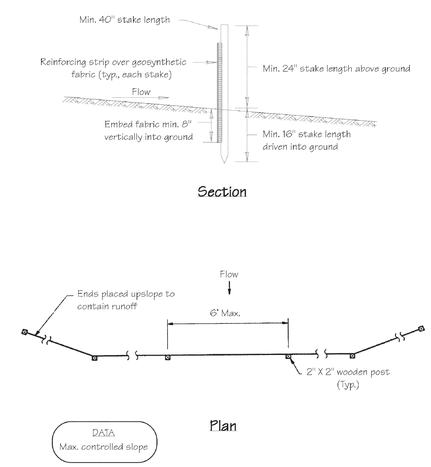

Source:	Symbol:	Detail No.
Adapted form MD Stds. & Specs. for ESC	SF	DE-ESC-3.1.2.1 Sheet 1 of 2 Date: 6/05

Standard Detail & Specifications
Silt Fence

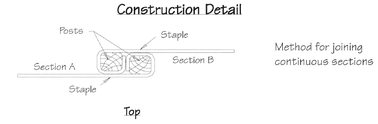

Construction Notes:

1. Geosynthetic fabric to be fastened securely to fence posts with wire ties or staples.
2. When two sections of filter cloth adjoin each other they shall be overlapped by six inches and folded.
3. Maintenance shall be performed as needed and material removed when "bulges" develop in the silt fence.

Materials:

1. Stakes: Steel (either T or U) or 2" x 2" hardwood
2. Geosynthetic Fabric: Type GD-I
3. Reinforcing strip: Wooden lath, plastic strip or other approved equivalent
4. Prefabricated Unit: Geofab, Envirofence, or approved equivalent

Source:	Symbol:	Detail No.
Adapted from MD Stds. & Specs. for ESC	SF	DE-ESC-3.1.2.1 Sheet 2 of 2 Date: 6/05

Standard Detail & Specifications
Stabilization Matting - Slope

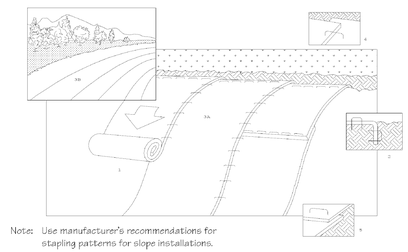

Construction Notes:

1. Prepare soil before installing matting, including application of lime, fertilizer, and seed.
2. Begin at the top of the slope by anchoring the mat in a 6" deep X 6" wide trench. Backfill and compact trench after stapling.
3. Roll the mats (A) down or (B) horizontally across the slope.
4. The edges of parrallel mats must be stapled with approx. 2" overlap.
5. When mats must be spliced down the slope, place mats end over end (shingle style) with approx. 4" overlap. Staple through overlapped area, approx. 12" apart.

Source:	Symbol:	Detail No.
Adapted from North American Green, Inc.	SM-S	DE-ESC-3.4.6.1 Sheet 1 of 2 Date: 6/05

Standard Detail & Specifications
Stabilization Matting - Slope

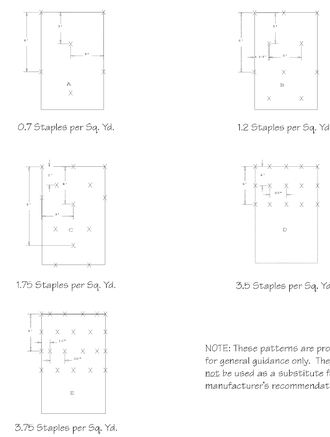

Source:	Symbol:	Detail No.
Adapted from North American Green, Inc.	SM-S	DE-ESC-3.4.6.1 Sheet 2 of 2 Date: 6/05

ROBERT R. BOWERS, P.E. No. 14412 DELAWARE PROFESSIONAL ENGINEER

ROBERT R. BOWERS, P.E.
DE. P.E. NO. 14412

IT IS A VIOLATION OF LAW FOR ANY PERSON, UNLESS ACTING UNDER THE DIRECTION OF A LICENSED ENGINEER, TO ALTER THIS DOCUMENT.

THIS DRAWING WAS PREPARED AT THE SCALE INDICATED. INACCURACIES IN THE STATED SCALE MAY BE INTRODUCED WHEN DRAWINGS ARE REPRODUCED BY ANY MEANS. USE THE GRAPHIC SCALE BAR TO DETERMINE THE ACTUAL SCALE.

IN CHARGE OF RRB
DESIGNED BY SMS
CHECKED BY DRP
DRAWN BY MK

NO.	DATE	REVISION	INT.
0	02/02/2017	ISSUED FOR BID	RRB

O'BRIEN & GERE ENGINEERS, INC
EAST NORRITON, PA

STATE OF DELAWARE DNREC
DIVISION OF WATERSHED STEWARDSHIP
IMPROVEMENTS TO DELAWARE DAMS
DOVER, DELAWARE

DNREC CONTRACT No.: NAT17001-DAMCONST

GENERAL
IMPROVEMENTS TO CRAIGS POND DAM
EROSION & SEDIMENTATION CONTROL
NOTES & DETAILS SHEET 1

FILE NO. 12804.61925 - G08
DATE 02/02/2017

G-8

I:\DE-DONREC.12804\61925.FLOOD-HAZ-MINGM\DOCS\3-CRAIGS MILL POND\DWG\SHEETS\49818-CM-G08-FD.DWG

Standard Detail & Specifications

Stabilized Construct. Entrance

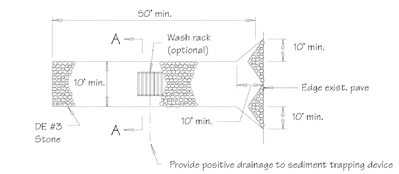

Plan

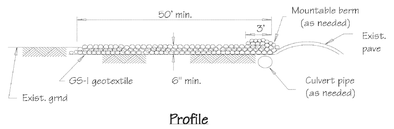

Profile

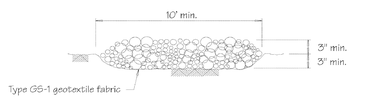

Section A-A (Std.)

Source:	Symbol:	Detail No.
Adapted from VA ESC Handbook	SCE	DE-ESC-3.4.7 Sheet 1 of 2
		Date: 12/03

Standard Detail & Specifications

Stabilized Construct. Entrance

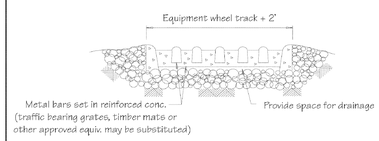

Section A-A (Opt.)

Construction Notes:

1. Stone size - Use DE #3 stone.
2. Length - As required, but not less than 50 feet (except on a single residence lot where a 30 foot minimum length would apply).
3. Thickness - Not less than size (6) inches.
4. Width - Ten (10) foot minimum, but not less than the full width at points where ingress or egress occurs.
5. Geotextile - Type GS-I, placed over the entire area prior to placing of stone.
6. Surface Water - All surface water flowing or diverted toward construction entrances shall be piped across the entrance. If piping is impractical, a mountable berm with 5:1 slopes will be permitted.
7. Maintenance - The entrance shall be maintained in a condition which will prevent tracking or flowing of sediment onto public rights-of-way. This may require periodic top dressing with additional stone as conditions demand and repair and/or cleanout of any measures used to trap sediment. All sediment spilled, dropped, washed or tracked onto public rights-of-way must be removed immediately.
8. Washing - Vehicle wheels shall be cleaned to remove sediment prior to entrance onto public rights-of-way. When washing is required, it shall be done on an area stabilized with stone and which drains into an approved sediment trapping device.
9. Inspection - Periodic inspection and needed maintenance shall be provided after each rain.

Source:	Symbol:	Detail No.
Adapted from VA ESC Handbook	SCE	DE-ESC-3.4.7 Sheet 2 of 2
		Date: 12/03

(MAY BE REQUIRED)

Standard Detail & Specifications

Turbidity Curtain

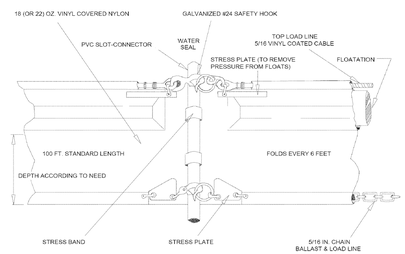

Typical Section - Type 2

DATA

Curtain type (1, 2, or 3)
Layout (Std. or Alt.)

Source:	Symbol:	Detail No.
Adapt. from Amer. Boom and Barrier Corp.	___ TC-(1/2/3) (Std/Alt) ___	DE-ESC-3.5.3 Sheet 2 of 8
		Date: 12/03

Standard Detail & Specifications

Turbidity Curtain

Construction Notes:

1. **Materials**
   a. Barriers should be a bright color (yellow or "international" orange are recommended) that will attract the attention of nearby boaters.
   b. The curtain fabric shall meet manufacturer's recommendations for the application.
   c. Seams in the fabric shall be either vulcanized welded or sewn and shall develop the full strength of the fabric.
   d. Floatation devices shall be flexible, buoyant units contained in an individual floatation sleeve or collar attached to the curtain. Buoyancy provided by the floatation units shall be sufficient to support the weight of the curtain and maintain a freeboard of at least 3 inches above the water surface level.
   e. Load lines must be fabricated into the bottom of all floating turbidity curtains. Type II and Type III must have load lines also fabricated into the top of the fabric. The top load line shall consist of woven webbing or vinyl-sheathed steel cable and shall have a break strength in excess of 10,000 pounds. The supplemental (bottom) load line shall consist of a chain incorporated into the bottom hem of the curtain of sufficient weight to serve as ballast to hold the curtain in a vertical position. Additional anchorage shall be provided as necessary. The load lines shall have suitable connecting devices which develop the full breaking strength for connection to load lines in adjacent sections as shown in the detail.
   f. External anchors may consist of wooden or metal stakes (2- x 4-inch or 2-1/2-inch minimum diameter wood or 1.33 lbs/linear foot steel) when Type I installation is used; when Type II or Type III installations are used, bottom anchors should be used.
   g. Bottom anchors must be sufficient to hold the curtain in the same position relative to the bottom of the watercourse without interfering withthe action of the curtain. The anchor may dig into the bottom (grappling hook, plow or fluke-type) or may be weighted (mushroom type) and should be attached to a floating anchor buoy via an anchor line. The anchor line should then run from the buoy to the to load line of the curtain. When used with Type III installations, these lines must contain enough slack to allow the buoy and curtain to float freely with tidal changes without pulling the buoy or curtain down and must be checked regularly to make sure they do not become entangled with debris. As previously noted, anchor spacing will vary with current velocity and potential wind and wave action; manufacturer's recommendations should be followed. See detail for orientation of external anchors and anchor buoys for tidal installations.

Source:	Symbol:	Detail No.
Adapt. from Amer. Boom and Barrier Corp.	___ TC-(1/2/3) (Std/Alt) ___	DE-ESC-3.5.3 Sheet 6 of 8
		Date: 12/03

Standard Detail & Specifications

Turbidity Curtain

Construction Notes (cont.)

3. **Maintenance**
   a. The individual(s) identified on the plan as responsible for maintenance of the curtain shall do so for the duration of the project in order to ensure the continuous protection of the watercourse.
   b. Should repairs to the geotextile fabric become necessary, repair kits are generally available from the manufacturer. The manufacturer's instructions must be followed to ensure the adequacy of the repair.
   c. When the curtain is no longer required as determined by the inspector, the curtain and related components shall be removed in such a manner as to minimize turbidity. Remaining sediment shall be sufficiently settled before removing the curtain. Sediment may be removed and the original depth (or plan elevation) restored. Any spoils must be taken to an approved upland disposal area and stabilized in accordance with the approved plan.
4. **Removal**
   a. Care shall be taken to protect the skirt from damage as the turbidity curtain is dragged from the watercourse.
   b. The site selected to bring the curtain ashore should be free of sharp rocks, broken cement, debris, etc. so as to minimize damage when hauling the curtain over the area.
   c. If the curtain has a deep skirt, it can be further protected by running a small boat along its length with a crew installing furling lines before attempting to remove the curtain from the water.

Source:	Symbol:	Detail No.
Adapt. from Amer. Boom and Barrier Corp.	___ TC-(1/2/3) (Std/Alt) ___	DE-ESC-3.5.3 Sheet 8 of 8
		Date: 12/03

Standard Detail & Specifications

Turbidity Curtain

NOTE: The standard layout shown is intended for use in streams, ponds and other non-tidal waters

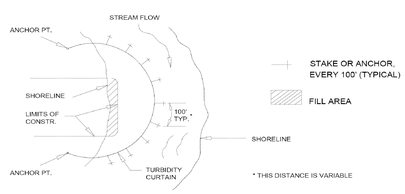

Plan - Std. Layout

Source:	Symbol:	Detail No.
Adapt. from Amer. Boom and Barrier Corp.	___ TC-(1/2/3) (Std/Alt) ___	DE-ESC-3.5.3 Sheet 4 of 8
		Date: 12/03

Standard Detail & Specifications

Turbidity Curtain

Construction Notes (cont.)

2. **Installation**
   a. In the calm water of lakes or ponds (Type I installation) it is usually sufficient to set the curtain end stakes or anchor points (using anchor buoys if bottom anchors are employed), then tow the curtain in the furled condition out and attach it to the stakes or anchor points. Following this, any additional stakes or buoyed anchors required to maintain the desired location of the curtain may be set and these anchor points made fast to the curtain. Only then shall the furling lines be cut to allow the curtain skirt to drop.
   b. In rivers or in other moving waters (Type II and Type III installations) it is important to set all curtain anchor points. Care must be taken to ensure that anchor points are of sufficient holding power to retain the curtain under the existing current conditions, prior to putting the furled curtain into the water. Anchor buoys should be employed on all anchors to prevent the current from submerging the flotation at the anchor points. If the curtain is being installed into tidal areas which would be subject to currents in both directions, anchors should be provided on both sides of the curtain. This will minimize curtain movement and prevent the curtain from overrunning the anchors during tide reversals. After the anchors have been secured, the furled curtain should be secured to the upstream anchor point and then sequentially attached to each next downstream anchor point until the entire curtain is in position. Before unfurling, the "lay" of the curtain should be assessed and any necessary adjustments made to the anchors. Once the location has been deemed adequate, the furling lines may be cut to allow the skirt to drop.
   c. Anchor lines should be attached to the flotation device, not to the bottom of the curtain. The anchoring line attached to the flotation device on the downstream side will provide support for the curtain. Attaching the anchors to the bottom of the curtain could cause premature failure of the curtain due to the stresses imparted on the middle section of the curtain.
   d. Turbidity curtain shall not be installed across channel flows unless there is a danger of causing sediment deposition to occur in the middle of a watercourse, thereby blocking access or creating a sand bar. In such situations, the curtain may be installed so as to form a long-sided, sharp "V" to deflect clean water around a work site, confining most of the silt-laden water to the work area inside the "V" and directing it to the shoreline. In no case shall the curtain be installed perpendicular to the channel flow.

Source:	Symbol:	Detail No.
Adapt. from Amer. Boom and Barrier Corp.	___ TC-(1/2/3) (Std/Alt) ___	DE-ESC-3.5.3 Sheet 7 of 8
		Date: 12/03

SAVED: 8/31/16 2:52 PM

I:\DE-DNREC_12804\61925_FLOOD-HAZ-MNGMN\DOCS\3-CRAIGS MILL POND\DWGS\SHEETS\49818-CM-G09-FD.DWG

ROBERT R. BOWERS REGISTERED No. 14412 DELAWARE PROFESSIONAL ENGINEER

ROBERT R. BOWERS, P.E.
DE. P.E. NO. 14412

IT IS A VIOLATION OF LAW FOR ANY PERSON, UNLESS ACTING UNDER THE DIRECTION OF A LICENSED ENGINEER, TO ALTER THIS DOCUMENT.

THIS DRAWING WAS PREPARED AT THE SCALE INDICATED. INACCURACIES IN THE STATED SCALE MAY BE INTRODUCED WHEN DRAWINGS ARE REPRODUCED BY ANY MEANS. USE THE GRAPHIC SCALE BAR TO DETERMINE THE ACTUAL SCALE.

IN CHARGE OF RRB
DESIGNED BY SMS
CHECKED BY DRP
DRAWN BY MK

NO.	DATE	REVISION	INT.
0	02/02/2017	ISSUED FOR BID	RRB

O'BRIEN & GERE ENGINEERS, INC
EAST NORRITON, PA

STATE OF DELAWARE DNREC
DIVISION OF WATERSHED STEWARDSHIP
IMPROVEMENTS TO DELAWARE DAMS
DOVER, DELAWARE

DNREC CONTRACT No.: NAT17001-DAMCONST

GENERAL
IMPROVEMENTS TO CRAIGS POND DAM
EROSION & SEDIMENTATION CONTROL
NOTES & DETAILS SHEET 2

FILE NO. 12804.61925 - G09
DATE 02/02/2017

G-9

SAVED: 7/18/16 10:43 AM

STRUCTURAL GENERAL NOTES:

THE FOLLOWING NOTES APPLY, UNLESS OTHERWISE NOTED OR SHOWN ON PLANS.

1. ALL WORK SHALL CONFORM TO THE LATEST EDITIONS OF THE REFERENCES LISTED IN THESE GENERAL NOTES. WHERE CONFLICTS ARISE BETWEEN THE SPECIFICATIONS, REFERENCES, NOTES, & DRAWINGS, THE MOST STRINGENT REQUIREMENT SHALL GOVERN.

2. WORK THESE STRUCTURAL DRAWINGS WITH THE GENERAL, CIVIL, & MECHANICAL DRAWINGS. VERIFY & COORDINATE DIMENSIONS ON THE STRUCTURAL DRAWINGS WITH WHAT IS SHOWN ON THE GENERAL, CIVIL, & MECHANICAL DRAWINGS.

3. SECTIONS & DETAILS SHOWN ON THE DRAWINGS ARE TYPICAL, UNLESS NOTED OTHERWISE. USE SIMILAR CONSTRUCTION AT LOCATIONS NOT SPECIFICALLY DETAILED.

4. THE CONTRACTOR SHALL VERIFY AND/OR ESTABLISH ALL EXISTING SITE CONDITIONS BEFORE BEGINNING THE WORK. THE CONTRACTOR SHALL NOTIFY THE ENGINEER IMMEDIATELY IF THE FIELD CONDITIONS DO NOT PERMIT THE INSTALLATION OF THE WORK IN ACCORDANCE WITH THE CONTRACT DOCUMENTS.

5. THE CONTRACTOR SHALL MAINTAIN THE STRUCTURAL INTEGRITY AND SERVICEABILITY OF THE EXISTING STRUCTURES WITHIN THE WORK AREA.

6. JOB SITE SAFETY ALONG WITH CONSTRUCTION MEANS & METHODS ARE THE SOLE RESPONSIBILITY OF THE CONTRACTOR.

7. CONTRACTOR SHALL SUBMIT SHOP DRAWINGS AND PRODUCT DATA AS INDICATED. THE ENGINEER SHALL HAVE A MINIMUM OF TEN (10) BUSINESS DAYS TO REVIEW THESE SUBMITTALS. THE SUBMITTALS SHALL BEAR THE CONTRACTOR'S STAMP OF APPROVAL WHICH SHALL CONSTITUTE CERTIFICATION THAT HE HAS VERIFIED ALL CONSTRUCTION CRITERIA, MATERIALS, & SIMILAR DATA & HAS CHECKED EACH DRAWING FOR COMPLETENESS, COORDINATION, & COMPLIANCE WITH THE CONTRACT DOCUMENTS. SHOP DRAWINGS THAT ARE REPRODUCTIONS/COPIES OF THE CONTRACT DRAWINGS SHALL BE REJECTED.

8. ALL MATERIALS SHALL BE STORED TO PROTECT THEM FROM THE ELEMENTS.

FOUNDATION & GEOTECHNICAL NOTES:

1. ALL FOUNDATIONS FOR THIS PROJECTS ARE DEEP FOUNDATIONS UNLESS NOTED OTHERWISE ON THE DRAWINGS. THE DEEP FOUNDATION SYSTEM CONSISTS OF GROUPS OF FRICTION PILES CAST INTO A REINFORCED CONCRETE PILE CAP.

2. ALL PILES SHALL BE CONCRETE FILLED CLOSED END STEEL PIPES. MINIMUM TIP & PILE HEAD ELEVATIONS, LOCATIONS, BATTER FROM THE VERTICAL, ETC ARE SHOWN ON THE STRUCTURAL DRAWINGS.

3. PIPE PILE MATERIAL SPECIFICATIONS ARE SHOWN ON THE STRUCTURAL DRAWINGS.

4. NATIVE SOILS UNDER THE CONCRETE PILE CAPS SHALL BE EVALUATED BY THE ENGINEER BEFORE CONCRETE PLACEMENT. THERE SHALL BE NO STANDING WATER OR DELETERIOUS MATERIAL WITHIN THE EXCAVATION AT THE TIME OF CONCRETE PLACEMENT, AND THE SOIL SHALL BE CAPABLE OF SAFELY SUPPORTING 2,000 PSF. IF NATIVE SOILS ARE NOT SATISFACTORY, THE ENGINEER WILL DIRECT THE CONTRACTOR TO OVER-EXCAVATE AND PLACE No. 57 AGGREGATE OR FLOWABLE FILL TO BOTTOM OF PILE CAP ELEVATION.

5. STRUCTURAL BACKFILL SHALL BE PLACED LOOSE IN 8 IN. MAXIMUM LIFTS AND COMPACTED TO NOT LESS THAN 90% OF MAXIMUM DRY DENSITY ACCORDING TO ASTM D1557.

6. EXCAVATED SOILS SHALL BE STOCKPILED FOR REUSE AS COMPACTED BACKFILL SUITABLE TO THE ENGINEER. IF ENCOUNTERED, UNSUITABLE SOILS & MATERIALS SUCH AS ORGANICS, DEBRIS, & PLASTIC FINE GRAINED SOILS SHALL BE SEPARATED FROM THE STOCKPILED BACKFILL. IF EXCAVATED SOILS ARE NOT SUITABLE OR IF INSUFFICIENT QUANTITY OF SUITABLE EXCAVATED SOILS ARE RECOVERED, IMPORTED FILL COMPLYING WITH ASTM D2487, GROUPS SM, SW, & SP, MAY BE USED.

CAST-IN-PLACE CONCRETE NOTES:

1. FOR CONCRETE WORK, FOLLOW EM 1110-2-2104 "STRENGTH DESIGN FOR REINFORCED-CONCRETE HYDRAULIC STRUCTURES" US ARMY CORPS OF ENGINEERS AS SUPPLEMENTED BY ACI 301 AND 318. FOLLOW ACI 306R FOR COLD WEATHER CONCRETE WORK AND ACI 305R FOR HOT WEATHER CONCRETE WORK. FOLLOW ACI 315 DETAILING CONCRETE REINFORCEMENT AND ACCESSORIES.

2. CONCRETE MIX SHALL BE PROPORTIONED IN ACCORDANCE TO ACI 318 AND SHALL MEET THE MINIMUM REQUIREMENTS HEREIN. CONTRACTOR SHALL SUBMIT LABORATORY TEST REPORTS FOR CONCRETE MATERIALS, MIX DESIGNS TO THE ENGINEER FOR REVIEW BEFORE PROCUREMENT OF MATERIALS AND EXECUTION OF THE CONCRETE WORK.

3. MINIMUM 28-DAY CONCRETE COMPRESSIVE STRENGTH: 4,000 P.S.I.

4. MAXIMUM WATER TO CEMENTITOUS MATERIALS RATIO: 0.45

5. MAXIMUM DESIGN SLUMP (+/- 1"):
   BEFORE ADDING HIGH-RANGE WATER REDUCER.....2" TO 4"
   AFTER ADDING HIGH-RANGE WATER REDUCER.....7" (ABS MAX)

6. PORTLAND CEMENT: ASTM C150 TYPE 1A OR 2A. USE ONLY ONE BRAND THROUGHOUT THE PROJECT UNLESS OTHERWISE ACCEPTABLE TO THE ENGINEER,

7. THE FOLLOWING MATERIALS MAY BE USED TO REDUCE THE PORTLAND CEMENT PORTION OF THE CEMENTITIOUS MATERIALS CONTENT, BUT THESE MATERIALS MAY NOT EXCEED 20% OF THE TOTAL CEMENTITIOUS MATERIALS CONTENT:

   POZZOLANS: ASTM C618 CLASS C OR F
   GROUND GRANULATED BLAST FURNACE SLAG: ASTM C989, GRADE 80.

8. CONCRETE SHALL BE AIR ENTRAINED 5% TO 7%. AIR ENTRAINMENT ADMIXTURE SHALL CONFORM TO C260 AND SHALL BE COMPATIBLE WITH OTHER ADMIXTURES.

CAST-IN-PLACE CONCRETE NOTES (CONTINUED):

9. THE CONTRACTOR MAY USE THE FOLLOWING ADMIXTURES:

   WATER-REDUCER: ASTM C 494 TYPE A
   WATER-REDUCER/RETARDER: ASTM C 494 TYPE D
   WATER-REDUCER/ACCELERATER: ASTMC C 494 TYPE E
   HIGH-RANGE WATER REDUCER: ASTM 494 TYPE F OR G

   NOTE: CALCIUM CHLORIDE IS NOT PERMITTED IN ANY ADMIXTURE.

10. NORMAL WEIGHT AGGREGATES SHALL BE COARSE AND FINE AGGREGATES CONFORMING TO ASTM C-33. LIMIT COARSE AGGREGATE SIZE IN ACCORDANCE TO ACI 318.

11. CAST SIX (6) TEST CYLINDERS FOR EACH DAY'S POUR: 3 FIELD CURED AND 3 LABORATORY CURED. TEST 1 FIELD CURED AND 1 LABORATORY CURED CYLINDER AT 7 DAYS AND AT 28 DAYS, HOLD THE LAST TWO IN RESERVE. CONTRACTOR SHALL NOTE THE TRUCK AND BATCH NUMBER AND THE LOCATION OF WHERE THE SAMPLED CONCRETE WAS PLACED ON EACH TEST CYLINDER. CONTRACTOR SHALL SUBMIT TEST RESULTS TO THE ENGINEER.

12. THE CONTRACTOR SHALL ENGAGE A TESTING AGENCY ACCEPTABLE TO THE ENGINEER TO PERFORM MATERIAL EVALUATION TESTS AND TO DESIGN CONCRETE MIXES.

13. CHAMFER EXPOSED CORNERS OF CONCRETE 3/4 IN UNLESS NOTED OTHERWISE.

14. CONCRETE REINFORCING: DEFORMED BARS, ASTM A-615, GRADE 60

15. ALL LAP SPLICES FOR DEFORMED BARS SHALL BE CLASS "B" SPLICES UNLESS NOTED OTHERWISE. IF USED, MECHANICAL COUPLERS SHALL MEET ACI 318 REQUIREMENTS.

16. SUBMIT SHOP DRAWINGS FOR CONCRETE REINFORCING DETAILING, FABRICATION, BENDING, AND PLACEMENT. SHOP DRAWINGS SHALL COMPLY WITH ACI 315 REQUIREMENTS AND SHALL SHOW BAR SCHEDULES, STIRRUP SPACING, BENT BAR DIAGRAMS, AND ARRANGEMENT OF CONCRETE REINFORCEMENT.

17. CAST-IN-PLACE CONCRETE COVER FOR REINFORCING U.N.O. ON THE DRAWINGS:
   CONCRETE CAST AGAINST EARTH ..... 4"
   ALL OTHER CONCRETE:
   #6 BAR & LARGER ..... 2"
   #5 BAR & SMALLER ..... 2"

18. THE CONTRACTOR IS RESPONSIBLE FOR THE DESIGN AND CONSTRUCTION OF ALL FORMWORK AND FALSEWORK REQUIRED FOR THE CONCRETE WORK. FORMWORK FOR CAST-IN-PLACE CONCRETE SHALL BE CONSTRUCTED TO BE SUBSTANTIAL AND UNYIELDING THAT WILL CONFORM TO THE SPECIFIED DIMENSIONS AND PROVIDE SMOOTH SURFACES. FORMWORK CONSTRUCTION SHALL CONFORM TO ACI MANUAL OF CONCRETE PRACTICE ACI 347 CH.2, PART 2.4. FORM RELEASE AGENTS SHALL BE NON-STAINING COMMERCIAL FORMULATION WITH MAXIMUM 350 g/L VOLATILE ORGANIC COMPOUNDS. FORMWORK MAY BE REMOVED ONCE THE CONCRETE TEST CYLINDERS HAVE ATTAINED 75% OF 28-DAY COMPRESSIVE STRENGTH. FORMS SHALL BE REMOVED IN SUCH A WAY AS TO PREVENT DAMAGE TO THE CONCRETE.

19. THE CONCRETE SHALL BE MOIST-CURED BY ONE OR BOTH THE FOLLOWING METHODS:
   MOISTURE-RETAINING COVER, COMPLYING WITH ASTM C171
   CURING COMPOUND COMPLYING WITH ASTM C309, TYPE 1

20 WHERE REQUIRED, LOCATE CONSTRUCTION JOINTS IN THE CENTER-1/3 OF SPAN, AND NOT CLOSER THAN 3 FT. FROM AN SUPPORTING PILE.

21. CONSTRUCTION JOINTS SHALL HAVE A SHEAR KEY 1-1/2 IN. DEEP x 1/3-JOINT-WIDTH. ALSO PROVIDE A TENSION CLASS "B" LAP OF REINFORCING. USE ROUGHENED JOINT WHERE INDICATED ON THE DRAWINGS. PROVIDE 6" HEAVY DUTY PVC WATERSTOP (GREENSTREAK TYPE 749 OR APPROVED EQUAL).

22. CONTRACTOR SHALL PROVIDE CONTROL JOINTS AS INDICATED ON THE DRAWINGS.

PRECAST CONCRETE NOTES:

1. PRECAST CONCRETE UNITS SHALL BE MEET REQUIREMENTS OF ACI 318, "PCI DESIGN HANDBOOK - PRECAST & PRESTRESSED CONCRETE" PRECAST CONCRETE INSTITUTE (PCI) MNL 120, & THE CAST-IN-PLACE CONCRETE NOTES ON THIS SHEET.

2. PRECAST CONCRETE SHALL BE TESTED & INSPECTED IN ACCORDANCE WITH "MANUAL FOR QUALITY CONTROL FOR PLANTS & PRODUCTION OF STRUCTURAL PRECAST CONCRETE PRODUCTS" PCI MNL 116.

3. PRECAST CONCRETE FABRICATOR AND PRECAST CONCRETE INSTALLER SHALL BE DEL DOT CERTIFIED.

4. THE CONTRACTOR SHALL FURNISH PRECAST CONCRETE UNITS AS INDICATED IN THE CONTRACT DOCUMENTS. PRECAST CONCRETE UNITS SHALL BE FABRICATED TO BE STRAIGHT & TRUE TO THE SIZE AND SHAPE INDICATED. EXPOSED EDGES & CORNERS SHALL BE PRECISE & TRUE SO EACH FINISHED UNIT COMPLIES WITH PCI MNL 116 PRODUCT DIMENSION TOLERANCES.

5. THE PRECAST CONCRETE FABRICATOR SHALL PROVIDE ADEQUATE BRACING, SUPPORT, NON-STAINING SHOCK ABSORBING MATERIAL, ETC TO ENSURE PRECAST CONCRETE UNITS BE DELIVERED UNDAMAGED TO THE SITE.

6. LIFT & SUPPORT PRECAST UNITS ONLY AT THE DESIGNATED POINTS AS SHOWN ON THE APPROVED SHOP DRAWINGS. INSTALL PRECAST CONCRETE UNITS LEVEL, PLUMB, SQUARE, TRUE, & IN ALIGNMENT WITHOUT EXCEEDING THE NON-CUMULATIVE ERECTION TOLERANCES OF PCI MNL 135.

PRECAST CONCRETE NOTES (CONTINUED):

7. THE CONTRACTOR SHALL SUBMIT SHOP FABRICATION & INSTALLATION DRAWINGS FOR REVIEW. THE SHOP & INSTALLATION DRAWINGS SHALL INCLUDE PLANS, ELEVATIONS, DIMENSIONS, SHAPES AND SECTIONS, OPENINGS, SUPPORT CONDITIONS, LIFTING & ANCHORAGE POINTS, & TYPES OF REINFORCEMENT, INCLUDING SPECIAL REINFORCEMENT, AND ANY OTHER PERTINENT DRAWINGS OR INFORMATION NECESSARY FOR THE FABRICATION, TRANSPORTATION, STORAGE, & INSTALLATION OF THE PRECAST CONCRETE UNITS.

8. PRECAST CONCRETE UNITS SHALL RECEIVE GRADE B FINISH UNLESS NOTED OTHERWISE.

9. MOLDS/FORMWORK SHALL BE RIGID, DIMENSIONALLY STABLE, NON-ABSORPTIVE, WARP & BUCKLE FREE MATERIAL THAT WILL PROVIDE CONTINUOUS & TRUE PRECAST CONCRETE SURFACES WITHIN FABRICATION TOLERANCES INDICATED; NON-REACTIVE WITH CONCRETE & SUITABLE FOR PRODUCING REQUIRED FINISHES. MOLD RELEASE AGENT SHALL BE A COMMERCIALLY PRODUCED LIQUID RELEASE AGENT THAT WILL NOT BOND WITH, STAIN OR ADVERSELY AFFECT PRECAST CONCRETE SURFACES ADN WILL NOT IMPAIR SUBSEQUENT SURFACE OR JOINT TREATMENTS.

10. PROVIDE CONSTRUCTION JOINTS WHERE INDICATED ON THE CONTRACT DRAWINGS.

11. WALLS & BEAMS SHALL BE MONOLITHIC WITH SLABS UNLESS NOTED OTHERWISE ON THE CONTRACT DRAWINGS.

STRUCTURAL STEEL & ALUMINUM NOTES:

1. FABRICATION AND ERECTION OF STRUCTURAL STEEL SHALL CONFORM TO "THE MANUAL OF STEEL CONSTRUCTION - ALLOWABLE STRENGTH DESIGN", FOURTEENTH EDITION, 2010, AMERICAN INSTITUTE OF STEEL CONSTRUCTION INCLUDING ANSI/AISC 360-10 "SPECIFICATIONS FOR STRUCTURAL STEEL BUILDING", SPECIFICATION FOR STRUCTURAL JOINTS USING HIGH STRENGTH BOLTS, AND AISC CODE OF STANDARD PRACTICE, EXCEPT SECTIONS 7.9.

2. ALL WELDING SHALL BE PERFORMED BY CERTIFIED WELDERS AND SHALL CONFORM TO "STRUCTURAL WELDING CODE - STEEL ANSI/AWS D1.1-2010" AND "STRUCTURAL WELDING CODE - ALUMINUM ANSI/AWS D1.2" AMERICAN WELDING SOCIETY.

3. WIDE FLANGES, CHANNELS, WT'S, HP'S, AND OTHER STRUCTURAL SHAPES: ASTM A992 OR ASTM A572, GRADE 50.

4. STEEL PLATES, BARS, AND ANGLES: ASTM A36.

5. HOLLOW STRUCTURAL SECTIONS: (SQUARE OR RECT.) ASTM A500, GRADE B.

6. HOLLOW STRUCTURAL SECTIONS: (ROUND) ASTM A501.

7. STAINLESS STEEL FOR STRUCTURAL SHAPES, BARS, & PLATES: ASTM A304

8. ALUMINUM ALLOY FOR STRUCTURAL SHAPES: 6061 T-6 . APPLY BITUMINOUS TAR COATING TO ALUMINUM SURFACES IN CONTACT WITH DISSIMILAR METALS.

9. ALL BOLTED CONNECTIONS SHALL BE AS INDICATED ON THE DRAWINGS.

10. ANCHOR BOLTS SHALL CONFORM TO ASTM A307 WITH OVERSIZED WASHER OR PLATE HEADED ENDS. HOOKED ANCHORS ARE NOT PERMITTED.

11. WELDING ELECTRODES: E70-XX SERIES FOR STEEL. PROVIDE ALUMINUM ALLOY 5356 FOR ALUMINUM WELDS.

12. HOT-DIP GALVANIZING: ASTM A123.

13. NONMETALLIC, NON-SHRINK GROUT: ASTM C1107. MINIMUM COMPRESSIVE STRENGTH AT 28-DAYS = 5,000 PSI.

14. CEMENT GROUT: PORTLAND CEMENT, ASTM C150, TYPE I. MINIMUM COMPRESSIVE STRENGTH AT 28-DAYS = 5,000 PSI.

15. GAS CUTTING OF MAIN STRUCTURAL MEMBERS IN THE FIELD WILL NOT BE PERMITTED.

16. SUBMIT SHOP DRAWINGS FOR FABRICATION AND ERECTION OF STRUCTURAL STEEL. CLEARLY INDICATE COORDINATED DIMENSIONS OF MECHANICAL UNITS, FLOOR OR ROOF PENETRATIONS, ETC. SHOP AND ERECTION DRAWINGS MUST SHOW ALL SHOP AND FIELD WELDS.

17. THE GENERAL CONTRACTOR AND STEEL ERECTOR SHALL NOTIFY THE ENGINEER OF ANY FABRICATION OR ERECTION ERRORS OR DEVIATIONS AND RECEIVE WRITTEN APPROVAL BEFORE ANY FIELD CORRECTIONS ARE MADE.

18. ALL STEEL SHALL BE HOT-DIP GALVANIZED, UNLESS NOTED OTHERWISE ON THE DRAWINGS. SPIRAL WELDED PIPE PILES SHALL BE PLAIN STEEL.

19. FIELD WELDED SURFACES WITHIN FOUR (4") INCHES OF WELD SHALL BE CLEANED AND GROUND SMOOTH. AFTER WELDING COAT THE EXPOSED AREA WITH APPROPRIATE PRIMER/PANTS AS REQUIRED.

20. VISUALLY INSPECT ALL FILLET WELDS. TEN PERCENT (10%) OF ALL FILED FILLET WELDS IN PRIMARY CONNECTIONS AND MULTI-PASS WELDS SHALL BE TESTED BY THE MAGNETIC PARTICLE METHOD, OR AS OTHERWISE STATED IN THE SPECIFICATIONS.

21. FIELD TEST BOLTED CONNECTIONS IN ACCORDANCE WITH AISC SPECIFICATIONS.

ROBERT R. BOWERS REGISTERED No. 14412 DELAWARE PROFESSIONAL ENGINEER

ROBERT R. BOWERS, P.E.
DE. P.E. NO. 14412

IT IS A VIOLATION OF LAW FOR ANY PERSON, UNLESS ACTING UNDER THE DIRECTION OF A LICENSED ENGINEER, TO ALTER THIS DOCUMENT.

THIS DRAWING WAS PREPARED AT THE SCALE INDICATED. INACCURACIES IN THE STATED SCALE MAY BE INTRODUCED WHEN DRAWINGS ARE REPRODUCED BY ANY MEANS. USE THE GRAPHIC SCALE BAR TO DETERMINE THE ACTUAL SCALE.

IN CHARGE OF RRB				
DESIGNED BY MAD				
CHECKED BY DRP				
DRAWN BY MK	0	02/02/2017	ISSUED FOR BID	RRB
	NO.	DATE	REVISION	INT.

O'BRIEN & GERE ENGINEERS, INC
EAST NORRITON, PA

STATE OF DELAWARE DNREC
DIVISION OF WATERSHED STEWARDSHIP
IMPROVEMENTS TO DELAWARE DAMS
DOVER, DELAWARE

DNREC CONTRACT No.: NAT17001-DAMCONST

STRUCTURAL
IMPROVEMENTS TO CRAIGS POND DAM
STRUCTURAL GENERAL NOTES AND SPECIFICATIONS

FILE NO. 12804.61925 -S01
DATE 02/02/2017

S-1

I:\DE-DONREC.12804\61925.FLOOD-HAZ-MGMT\DOCS\3-CRAIGS MILL POND\DWGS\SHEETS\49818-CM-S01-FD.DWG

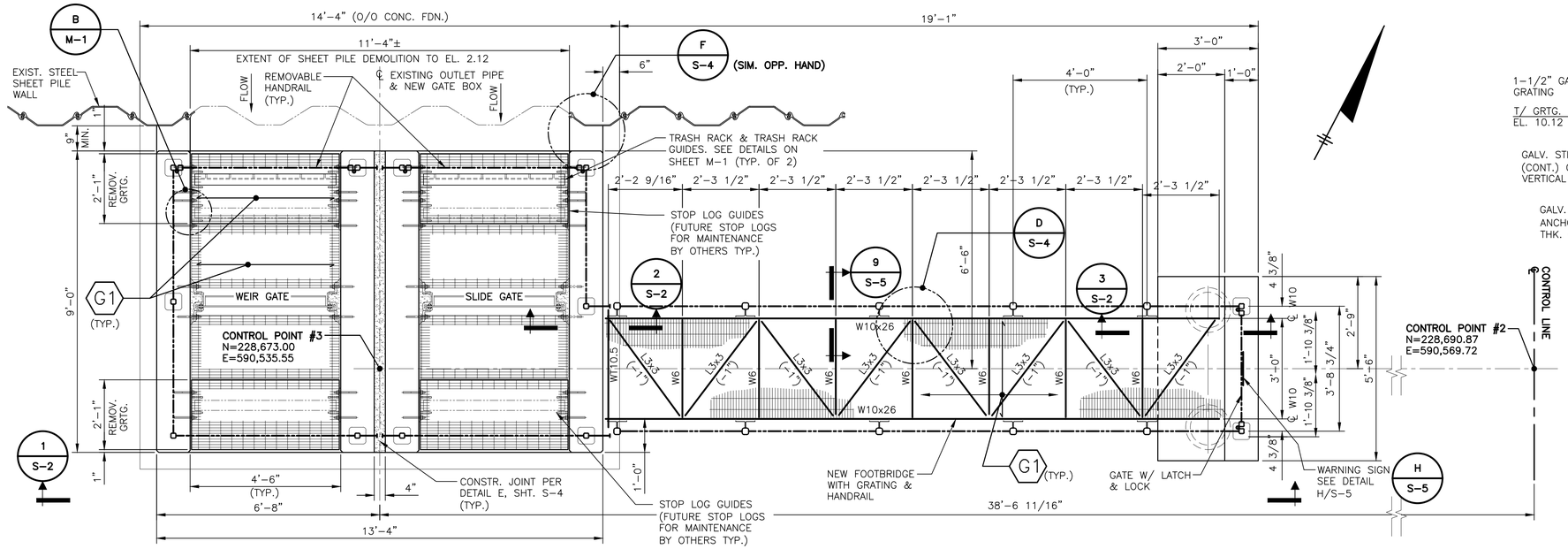

GATE BOX AND BRIDGE PLAN @ EL. 10.12

SCALE: 1/2"=1'-0"

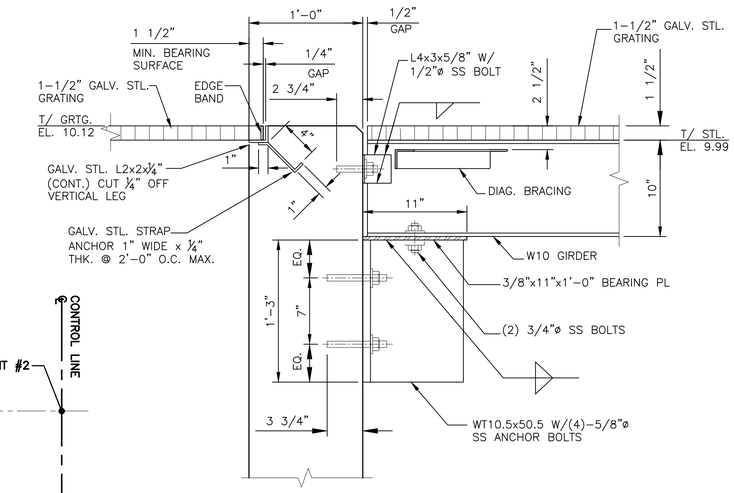

SECTION

SCALE: 1 1/2"=1'-0"

NOTES:

1. ALL ANCHORS SHALL BE HILTI TZ RODS AND HIT HY 200 ADHESIVE (U.N.O.).
2. SECURE PERMANENT GRATING TO FRAME WITH STAINLESS STEEL HAT CLIPS.

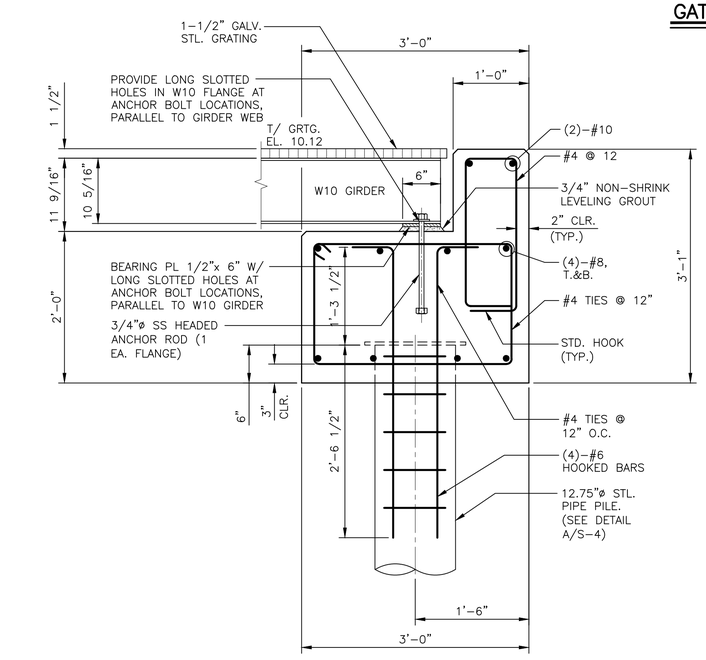

SECTION

SCALE: 1"=1'-0"

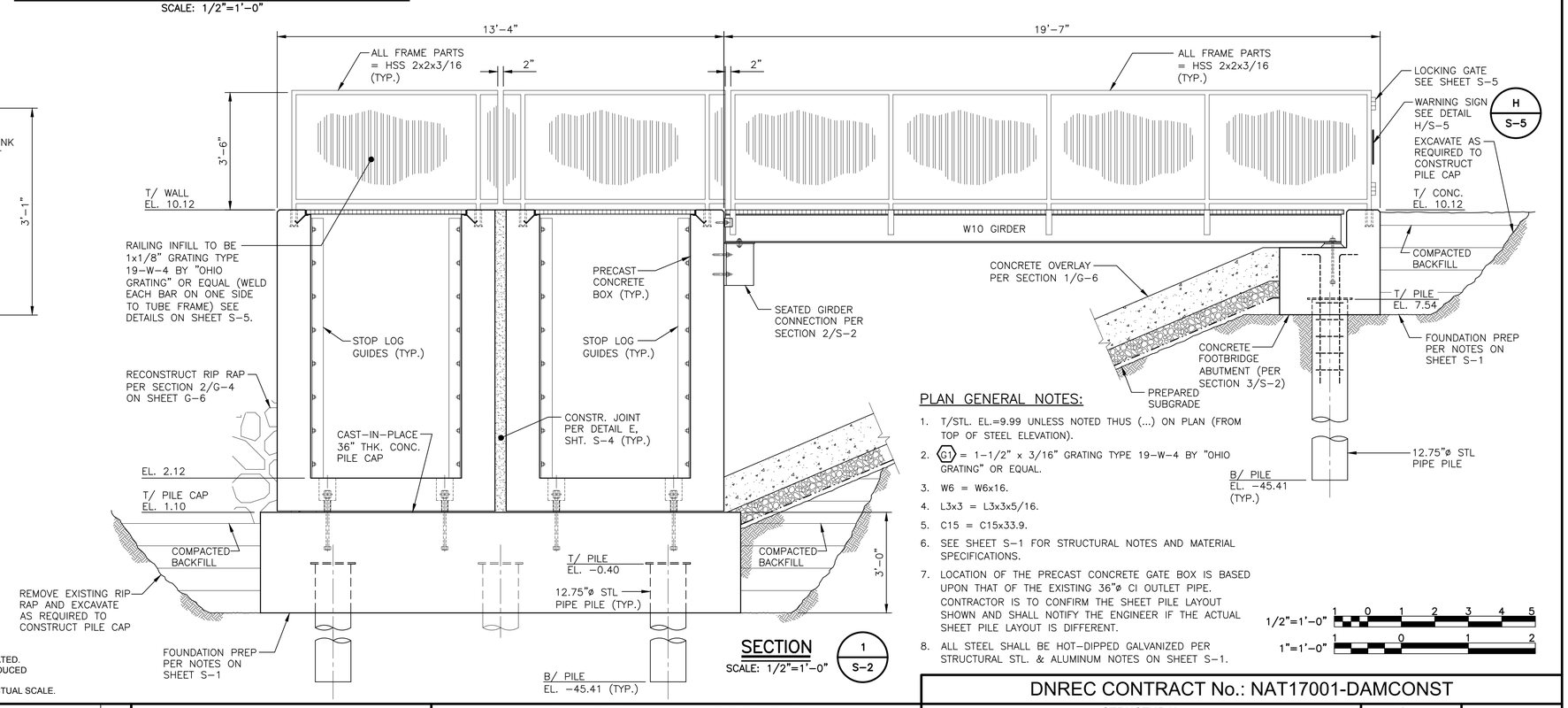

SECTION

SCALE: 1/2"=1'-0"

PLAN GENERAL NOTES:

1. T/STL. EL.=9.99 UNLESS NOTED THUS (...) ON PLAN (FROM TOP OF STEEL ELEVATION).
2. G1 = 1-1/2" x 3/16" GRATING TYPE 19-W-4 BY "OHIO GRATING" OR EQUAL.
3. W6 = W6x16.
4. L3x3 = L3x3x5/16.
5. C15 = C15x33.9.
6. SEE SHEET S-1 FOR STRUCTURAL NOTES AND MATERIAL SPECIFICATIONS.
7. LOCATION OF THE PRECAST CONCRETE GATE BOX IS BASED UPON THAT OF THE EXISTING 36"ø CI OUTLET PIPE. CONTRACTOR IS TO CONFIRM THE SHEET PILE LAYOUT SHOWN AND SHALL NOTIFY THE ENGINEER IF THE ACTUAL SHEET PILE LAYOUT IS DIFFERENT.
8. ALL STEEL SHALL BE HOT-DIPPED GALVANIZED PER STRUCTURAL STL. & ALUMINUM NOTES ON SHEET S-1.

1/2"=1'-0" 1 0 1 2 3 4 5

1"=1'-0" 1 0 1 2

IT IS A VIOLATION OF LAW FOR ANY PERSON, UNLESS ACTING UNDER THE DIRECTION OF A LICENSED ENGINEER, TO ALTER THIS DOCUMENT.

THIS DRAWING WAS PREPARED AT THE SCALE INDICATED. INACCURACIES IN THE STATED SCALE MAY BE INTRODUCED WHEN DRAWINGS ARE REPRODUCED BY ANY MEANS. USE THE GRAPHIC SCALE BAR TO DETERMINE THE ACTUAL SCALE.

ROBERT R. BOWERS REGISTERED No. 14412 DELAWARE PROFESSIONAL ENGINEER

ROBERT R. BOWERS, P.E.
DE. P.E. NO. 14412

IN CHARGE OF	RRB
DESIGNED BY	MAD
CHECKED BY	DRP
DRAWN BY	MK

NO.	DATE	REVISION	INT.
0	02/02/2017	ISSUED FOR BID	RRB

O'BRIEN & GERE ENGINEERS, INC
EAST NORRITON, PA

STATE OF DELAWARE DNREC
DIVISION OF WATERSHED STEWARDSHIP
IMPROVEMENTS TO DELAWARE DAMS
DOVER, DELAWARE

DNREC CONTRACT No.: NAT17001-DAMCONST

STRUCTURAL
IMPROVEMENTS TO CRAIGS POND DAM
GATE BOX & BRIDGE FOUNDATION
PLAN & SECTIONS

FILE NO. 12804.61925 -S02

DATE 02/02/2017

S-2

SAVED: 8/31/16 3:11 PM
I:\DE-DONREC.12804\61925.FLOOD-HAZ-MNG\MN\DOCS\3-CRAIGS MILL POND\DWG\SHEETS\49818-CM-S02-FD.DWG

SAVED: 8/31/16 3:17 PM

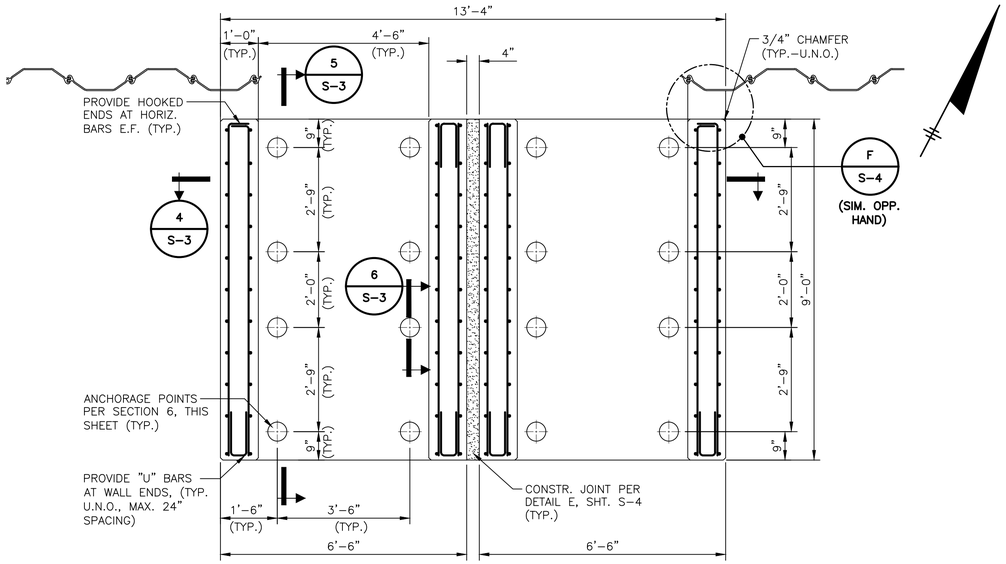

GATE BOX PLAN @ EL. 3.0

SCALE: 1/2"=1'-0"

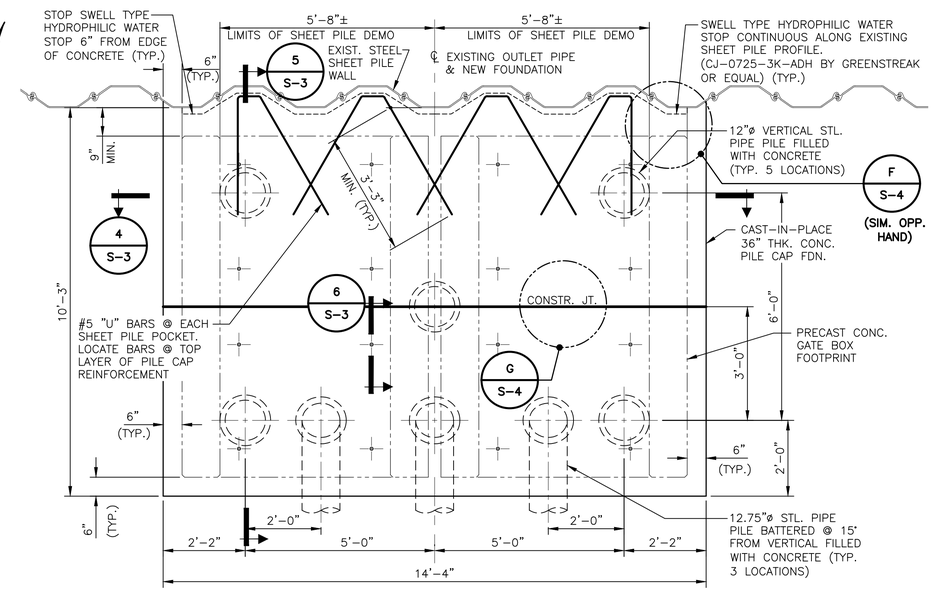

GATE BOX FOUNDATION PLAN @ EL. 1.10

SCALE: 1/2"=1'-0"

PLAN NOTES:

1. SEE SHEET S-1 FOR STRUCTURAL NOTES AND MATERIAL SPECIFICATIONS.
2. * – DIMENSION SHALL BE COORDINATED WITH THE APPROVED MECHANICAL SHOP DRAWINGS.
3. LOCATION OF THE PRECAST CONCRETE GATE BOX IS BASED UPON THAT OF THE EXISTING 36"ø CI OUTLET PIPE. CONTRACTOR IS TO CONFIRM THE SHEET PILE LAYOUT SHOWN AND SHALL NOTIFY THE ENGINEER IF THE ACTUAL SHEET PILE LAYOUT IS DIFFERENT.
4. SEE DETAIL A ON SHEET S-4 FOR PILE DETAILS.

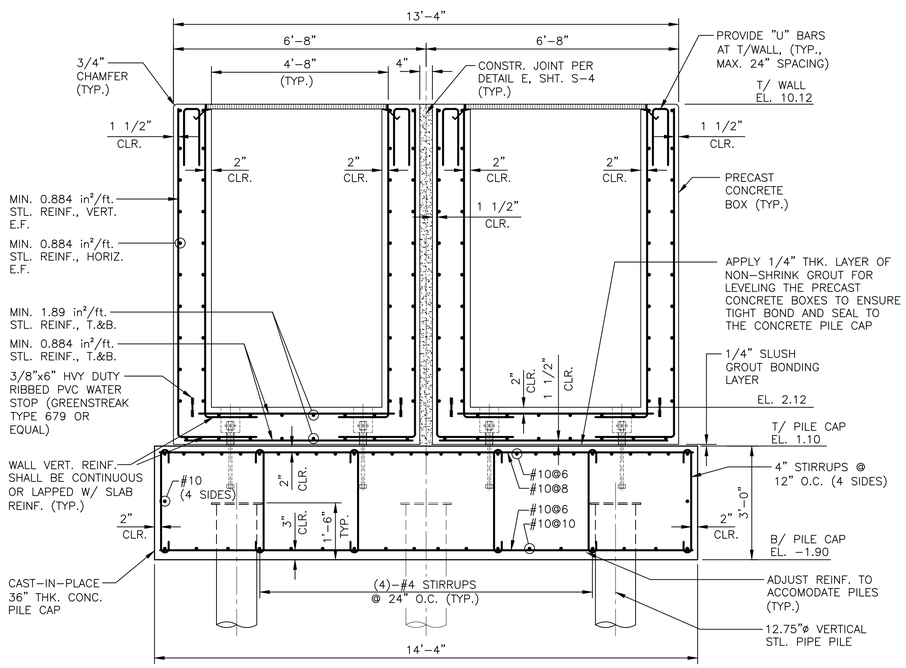

SECTION 4/S-3

SCALE: 1/2"=1'-0"

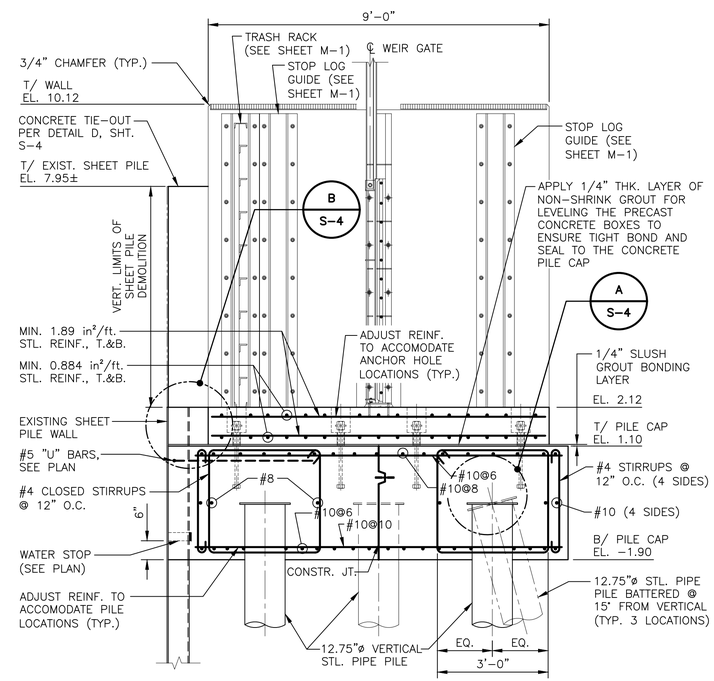

SECTION 5/S-3

SCALE: 1/2"=1'-0"

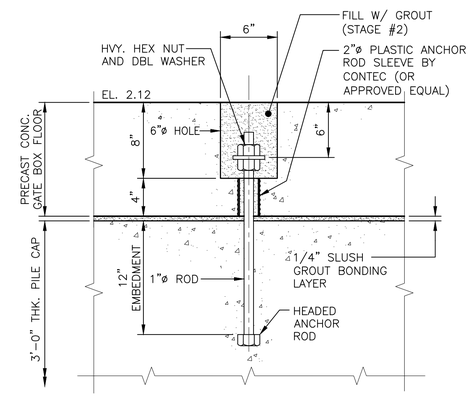

TYPICAL GATE BOX ANCHOR ASSEMBLY

SECTION 6/S-3

SCALE: 1-1/2"=1'-0"

1/2"=1'-0" 1 0 1 2 3 4 5

1 1/2"=1'-0" 1 .5 0 1

ROBERT R. BOWERS PROFESSIONAL ENGINEER No. 14412 DELAWARE

ROBERT R. BOWERS, P.E.
DE. P.E. NO. 14412

IT IS A VIOLATION OF LAW FOR ANY PERSON, UNLESS ACTING UNDER THE DIRECTION OF A LICENSED ENGINEER, TO ALTER THIS DOCUMENT.

THIS DRAWING WAS PREPARED AT THE SCALE INDICATED. INACCURACIES IN THE STATED SCALE MAY BE INTRODUCED WHEN DRAWINGS ARE REPRODUCED BY ANY MEANS. USE THE GRAPHIC SCALE BAR TO DETERMINE THE ACTUAL SCALE.

IN CHARGE OF	RRB
DESIGNED BY	MAD
CHECKED BY	DRP
DRAWN BY	MK

NO.	DATE	REVISION	INT.
0	02/02/2017	ISSUED FOR BID	RRB

O'BRIEN & GERE ENGINEERS, INC
EAST NORRITON, PA

STATE OF DELAWARE DNREC
DIVISION OF WATERSHED STEWARDSHIP
IMPROVEMENTS TO DELAWARE DAMS
DOVER, DELAWARE

DNREC CONTRACT No.: NAT17001-DAMCONST

STRUCTURAL
IMPROVEMENTS TO CRAIGS POND DAM
GATE BOX FOUNDATION & CONCRETE REINFORCING PLANS & SECTIONS

FILE NO. 12804.61925 -S03

DATE 02/02/2017

S-3

I:\DE-DONREC.12804\61925.FLOOD-HAZ-MNGMN\DOCS\3-CRAIGS MILL POND\DWG\SHEETS\49818-CM-S03-FD.DWG

SAVED: 7/18/16 11:29 AM

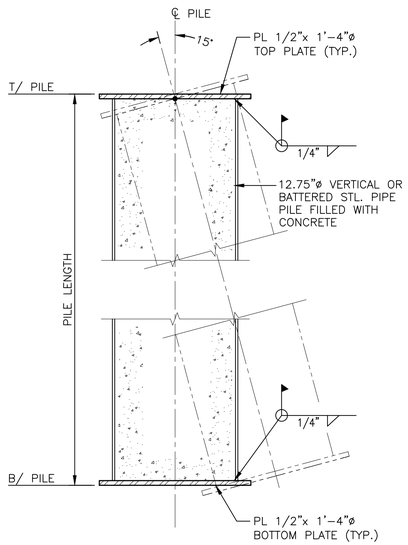

VERTICAL AND BATTERED PILE ANCHOR PLATE DETAIL

DETAIL A / S-3
SCALE: 1-1/2"=1'-0"

DETAIL NOTES:

1. ALL PILES TO BE ASTM A139 GR. B SPIRALWELDED PIPE.
2. ALL PIPES TO BE 12.75" O.D. W/ 0.375" WALL THICKNESS.
3. AXIAL PILE DESIGN LOAD = 70 KIPS TENSION AND COMPRESSION.
4. PILE LENGTH = 45 FT. MIN. TIP ELEVATION = -45.41.
5. ALL PILES TO BE CLOSED END WITH 1/2" THK. STEEL BOTTOM PLATE.

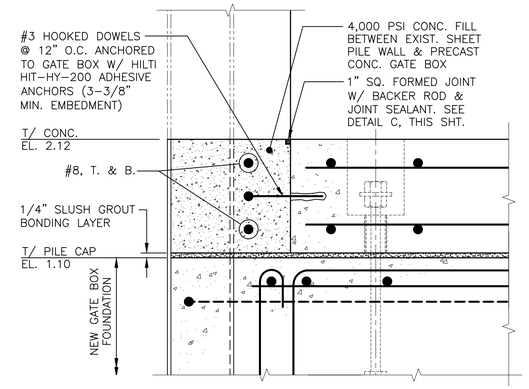

DETAIL B / S-3
SCALE: 1-1/2"=1'-0"

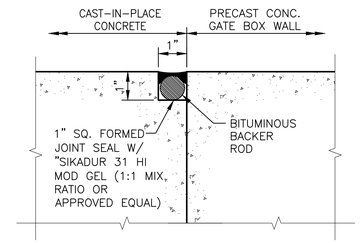

CONCRETE FORMED JOINT DETAIL

DETAIL C / S-4
NOT TO SCALE

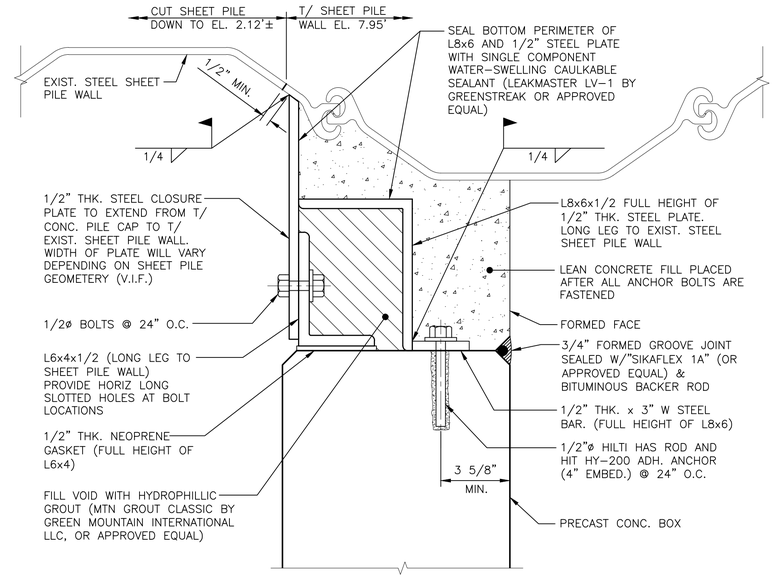

PRECAST CONCRETE BOX TIE-OUT AT EXISTING SHEET PILE WALL TYPICAL DETAIL

DETAIL F / S-2 / S-3
SCALE: 3"=1'-0"

DETAIL NOTES:

1. EXACT LAYOUT, LOCATION, AND CONFIGURATION OF THE EXIST. STEEL SHEET PILE WALL (INCL. FLUTES AND FACES) IS NOT KNOWN AT THIS TIME AND MUST BE VERIFIED IN THE FIELD BY THE CONTRACTOR.
2. THIS DETAIL IS INTENDED TO PROVIDE A SEMI-FLEXIBLE, WATER-TIGHT SEAL BETWEEN THE PRECAST BOX AND THE EXISTING STEEL SHEET PILE WALL.
3. ALL MISC, STEEL SHAPES AND PLATES MAY BE FIELD-CUT TO FIT THE ACTUAL FIELD CONDITIONS DURING CONSTRUCTION. FIELD CUTS SHALL BE STRAIGHT, TRUE, NEAT, AND SHALL BE IN ACCORDANCE WITH AISC STD PRACTICES.
4. THE CONTRACTOR MUST FOLLOW THIS INSTALLATION SEQUENCE TO ENSURE THE DETAIL FUNCTIONS PROPERLY.
   A. AFTER THE PRECAST BOX IS SET, INSTALL THE 1/2" STEEL CLOSURE PLATE. WIDTH OF PLATE WILL VARY AND SHALL BE DETERMINED IN THE FIELD.
   B. APPLY NEOPRENE GUSSET TO FACE OF PRECAST BOX.
   C. PLACE L6x4 AGAINST NEOPRENE PAD AND INSTALL 1/2"ø STEEL BOLTS. DO NOT FULLY TIGHTEN THE BOLTS AT THIS TIME.
   D. INSERT TEMP WEDGES BETWEEN THE EXISTING SHEET PILE AND L6x4 SO THAT THE L6x4 FIRMLY COMPRESSES THE NEOPRENE GUSSET AGAINST THE PRECAST BOX.
   E. FULLY TIGHTEN THE 1/2"ø BOLTS. REMOVE THE TEMP WEDGES AFTER ALL THE BOLTS ARE FULLY TIGHTENED.
   F. LAYOUT AND DRILL HOLES FOR 1/2"ø HILTI ANCHORS.
   G. INSTALL L8x4 AND 1/2" THK. BAR, INSTALL AND TIGHTEN 1/2"ø HILTI ANCHORS.
   H. SEAL BASE OF 1/2" THK. CLOSURE PLATE AND L8x6 WITH CAULKABLE WATER-SWELLING SEALANT (GREENSTREAK LEAK MASTER LV-1 OR APPROVED EQUAL).
   I. INSTALL HYDROPHILIC GROUT IN THE VOID BETWEEN L8x6 AND L6x4.
   J. INSTALL LEAN CONCRETE FILL.

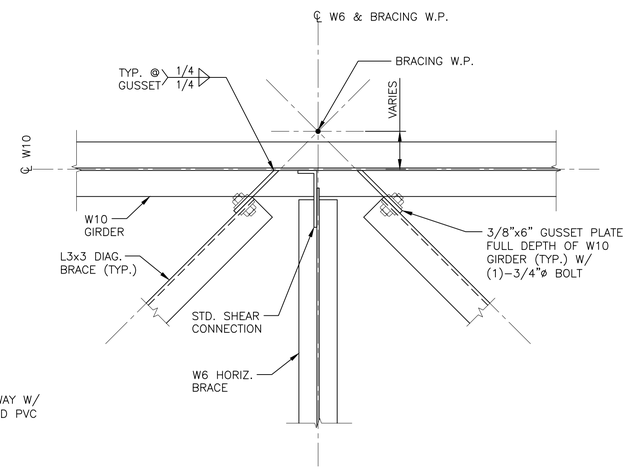

DIAGONAL BRACING DETAIL

DETAIL D / S-2
SCALE: 1-1/2"=1'-0"

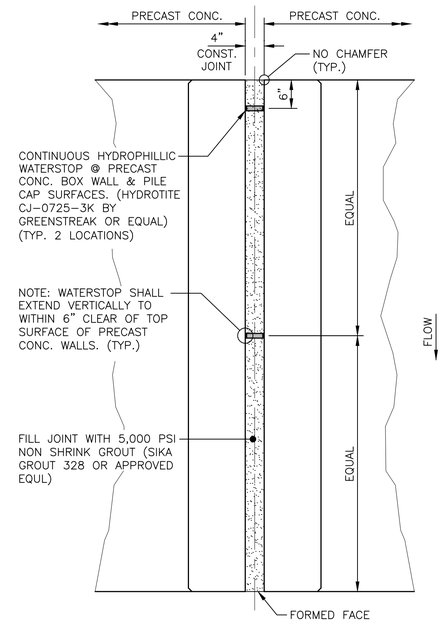

PRECAST CONCRETE CONSTRUCTION JOINT DETAIL

DETAIL E / S-2 / S-3
SCALE: 3/4"=1'-0"

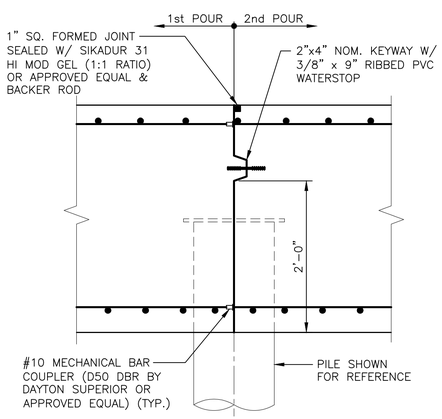

PILE CAP CONSTRUCTION JOINT DETAIL

DETAIL G / S-3
SCALE: 1"=1'-0"

DETAIL NOTES:

1. ALLOW 7 DAYS MIN. BETWEEN 1st & 2nd POURS.

PLAN NOTES:

1. SEE SHEET S-1 FOR STRUCTURAL NOTES AND MATERIAL SPECIFICATIONS.
2. ALL STEEL SHALL BE HOT-DIPPED GALVANIZED PER STRUCTURAL STL. & ALUMINUM NOTES ON SHEET S-1.

1/2"=1'-0" 1 0 1 2 3 4 5
1 1/2"=1'-0" 1 .5 0 1

ROBERT R. BOWERS REGISTERED No. 14412 DELAWARE PROFESSIONAL ENGINEER
ROBERT R. BOWERS, P.E.
DE. P.E. NO. 14412

IT IS A VIOLATION OF LAW FOR ANY PERSON, UNLESS ACTING UNDER THE DIRECTION OF A LICENSED ENGINEER, TO ALTER THIS DOCUMENT.

THIS DRAWING WAS PREPARED AT THE SCALE INDICATED. INACCURACIES IN THE STATED SCALE MAY BE INTRODUCED WHEN DRAWINGS ARE REPRODUCED BY ANY MEANS. USE THE GRAPHIC SCALE BAR TO DETERMINE THE ACTUAL SCALE.

IN CHARGE OF	RRB			
DESIGNED BY	MAD			
CHECKED BY	DRP			
DRAWN BY	MK	0	02/02/2017	ISSUED FOR BID	RRB
		NO.	DATE	REVISION	INT.

O'BRIEN & GERE ENGINEERS, INC
EAST NORRITON, PA

STATE OF DELAWARE DNREC
DIVISION OF WATERSHED STEWARDSHIP
IMPROVEMENTS TO DELAWARE DAMS
DOVER, DELAWARE

DNREC CONTRACT No.: NAT17001-DAMCONST

STRUCTURAL
IMPROVEMENTS TO CRAIGS POND DAM
MISCELLANEOUS STRUCTURAL SECTIONS & DETAILS SHEET 1

FILE NO. 12804.61925 - S04
DATE 02/02/2017

S-4

I:\DE-DONREC.12804\61925.FLOOD-HAZ\MGN\INDOCS\3-CRAIGS MILL POND\DWG\SHEETS\49818-CM-S04-FD.DWG

SAVED: 7/18/16 4:12 PM

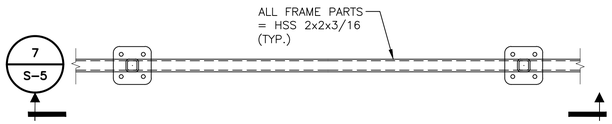

PLAN – TYPICAL SPAN

SCALE: 1"=1'-0"

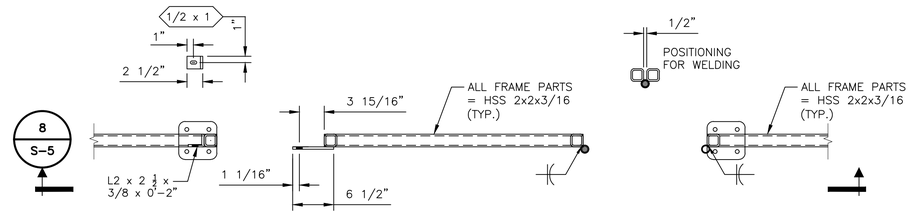

PLAN – AT GATE

SCALE: 1"=1'-0"

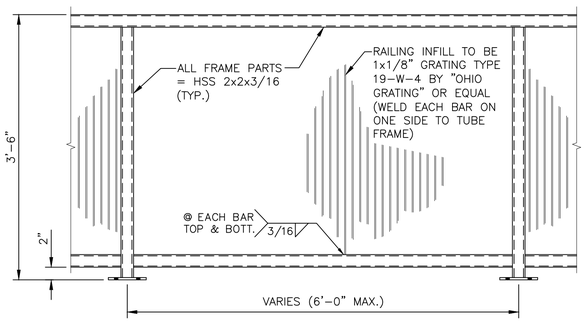

SECTION 7/S-5

SCALE: 1"=1'-0"

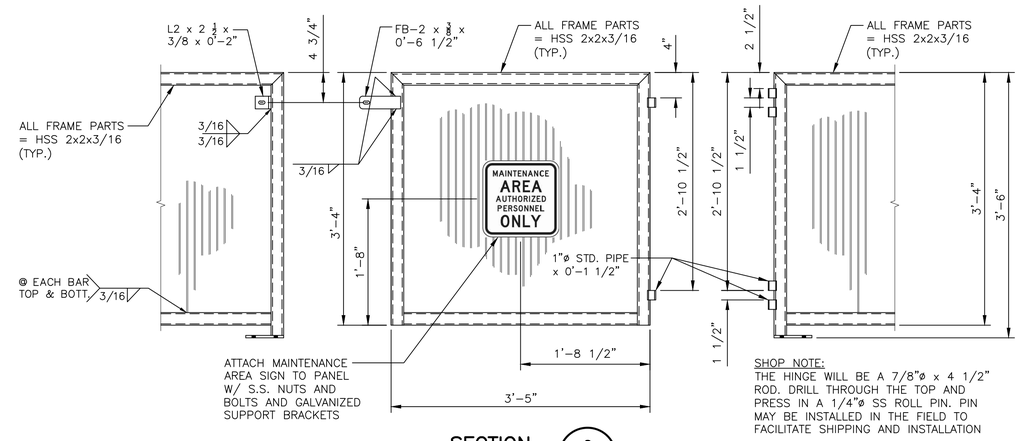

SECTION 8/S-5

SCALE: 1"=1'-0"

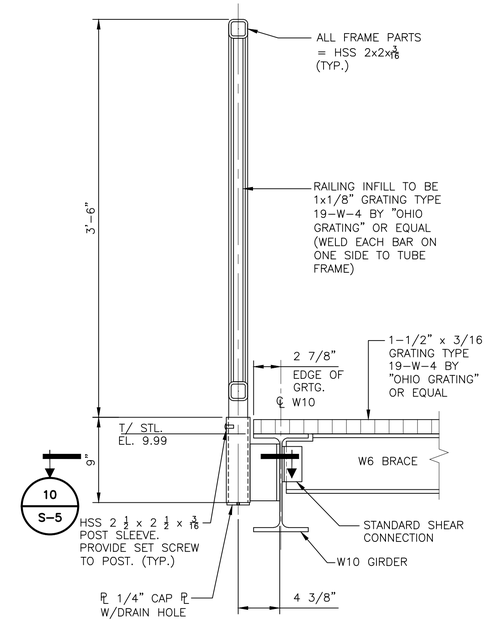

SECTION 9/S-2

SCALE: 1-1/2"=1'-0"

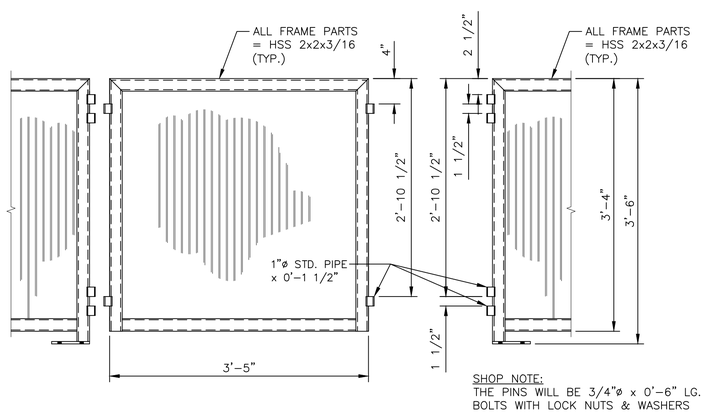

REMOVABLE HANDRAIL SECTION

SCALE: 1"=1'-0"

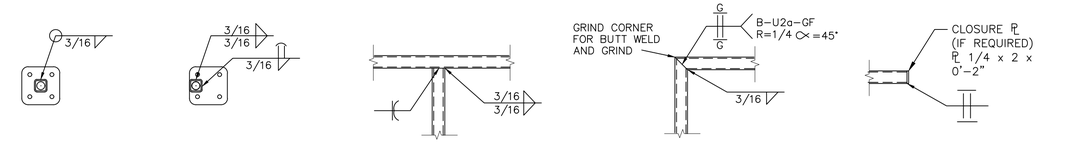

POST AT MIDSPAN | POST AT GATE | FRAME AT TEE | FRAME AT CORNER | AT END OF EXPOSED RAIL

WELD CRITERIA

SCALE: NTS

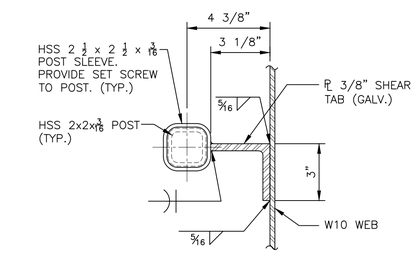

SECTION 10/S-5

SCALE: 3"=1'-0"

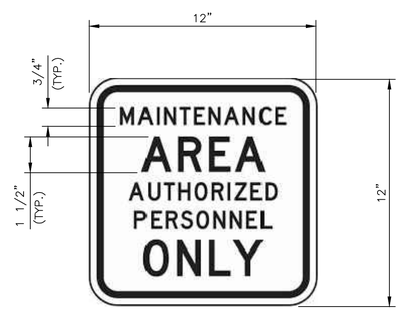

MAINTENANCE AREA SIGN

DETAIL H/S-2

SCALE: 1-1/2"=1'-0"

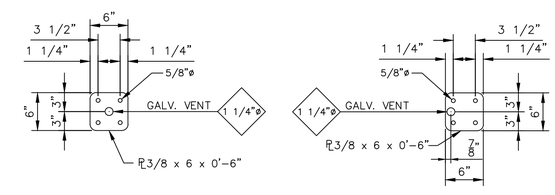

BASE PLATES

SCALE: NTS

1"=1'-0" 1 0 1 2

3"=1'-0" 3 0 3 6 9

1 1/2"=1'-0" 1 .5 0 1

PLAN NOTES:

1. SEE SHEET S-1 FOR STRUCTURAL NOTES AND MATERIAL SPECIFICATIONS.
2. ALL STEEL SHALL BE HOT-DIPPED GALVANIZED PER STRUCTURAL STL. & ALUMINUM NOTES ON SHEET S-1.

IT IS A VIOLATION OF LAW FOR ANY PERSON, UNLESS ACTING UNDER THE DIRECTION OF A LICENSED ENGINEER, TO ALTER THIS DOCUMENT.

THIS DRAWING WAS PREPARED AT THE SCALE INDICATED. INACCURACIES IN THE STATED SCALE MAY BE INTRODUCED WHEN DRAWINGS ARE REPRODUCED BY ANY MEANS. USE THE GRAPHIC SCALE BAR TO DETERMINE THE ACTUAL SCALE.

ROBERT R. BOWERS REGISTERED No. 14412 DELAWARE PROFESSIONAL ENGINEER

ROBERT R. BOWERS, P.E.
DE. P.E. NO. 14412

IN CHARGE OF RRB				
DESIGNED BY MAD				
CHECKED BY DRP				
DRAWN BY MK	0	02/02/2017	ISSUED FOR BID	RRB
	NO.	DATE	REVISION	INT.

O'BRIEN & GERE ENGINEERS, INC
EAST NORRITON, PA

STATE OF DELAWARE DNREC
DIVISION OF WATERSHED STEWARDSHIP
IMPROVEMENTS TO DELAWARE DAMS
DOVER, DELAWARE

DNREC CONTRACT No.: NAT17001-DAMCONST

STRUCTURAL
IMPROVEMENTS TO CRAIGS POND DAM
MISCELLANEOUS STRUCTURAL
SECTIONS & DETAILS SHEET 2

FILE NO. 12804.61925 - S05

DATE 02/02/2017

S-5

I:\DE-DNREC.12804\61925.FLOOD-HAZ-MNGMN\DOCS\3-CRAIGS MILL POND\DWG\SHEETS\49816-CM-S05-FD.DWG

SAVED: 12/7/16 6:47 PM

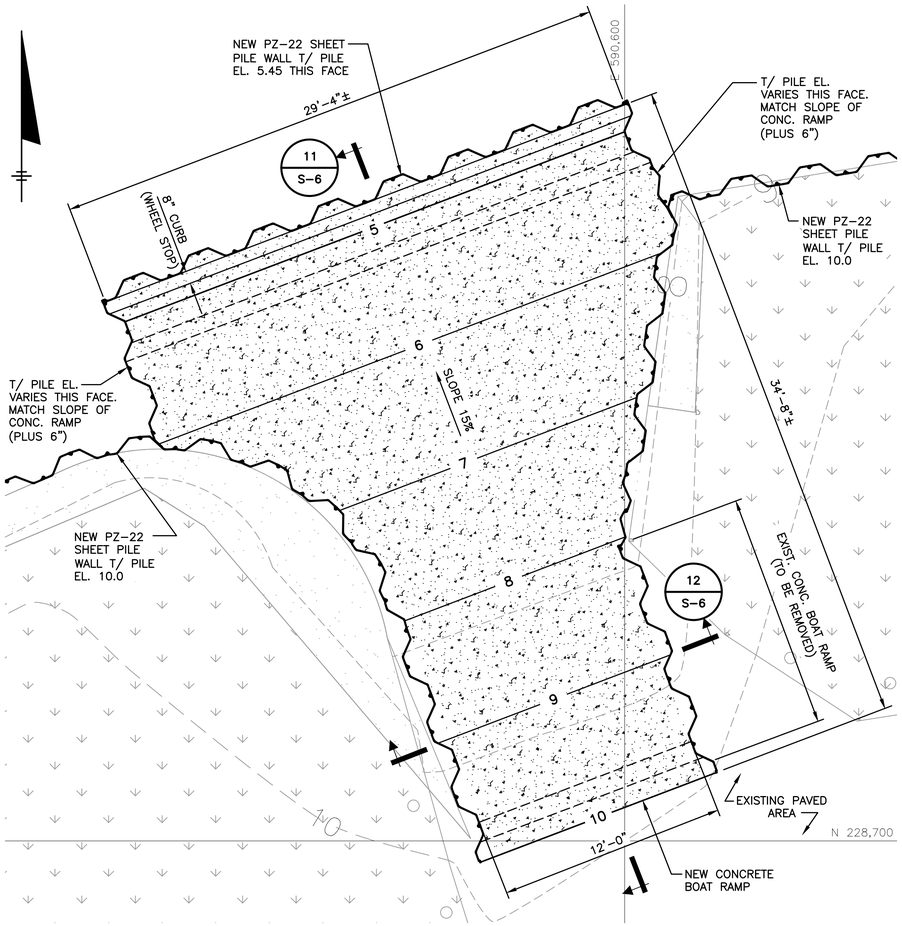

PLAN – NEW CONCRETE BOAT RAMP

SCALE: 1/4"=1'-0"

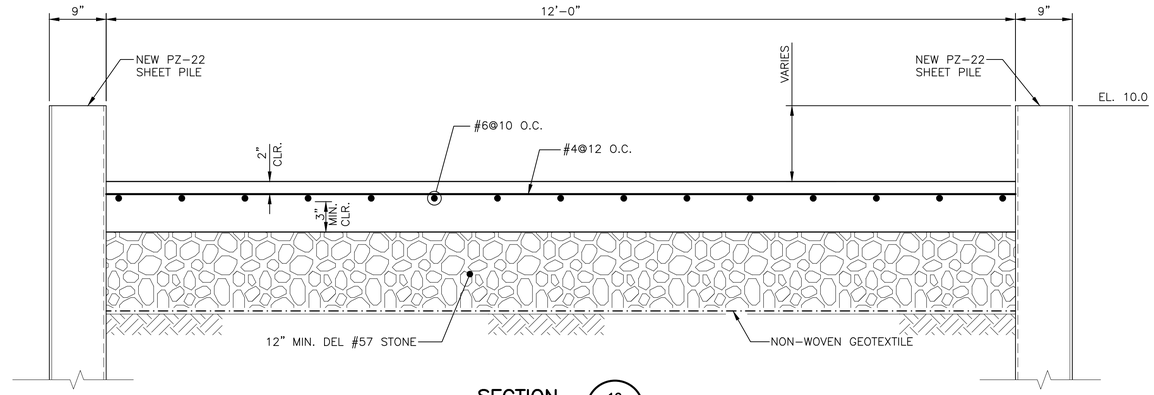

SECTION

SCALE: 1"=1'-0" (12 / S-6)

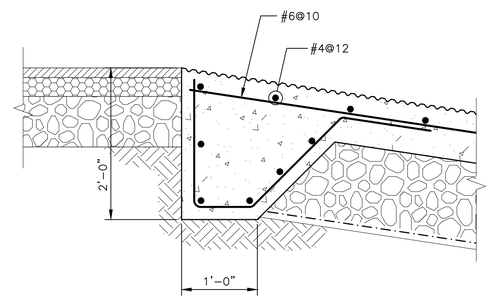

DETAIL

SCALE: 1"=1'-0" (J / S-6)

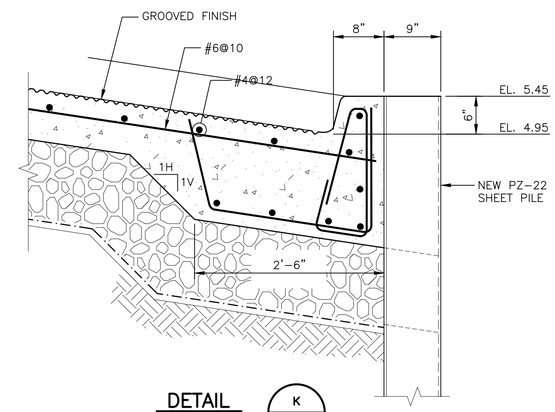

DETAIL

SCALE: 1"=1'-0" (K / S-6)

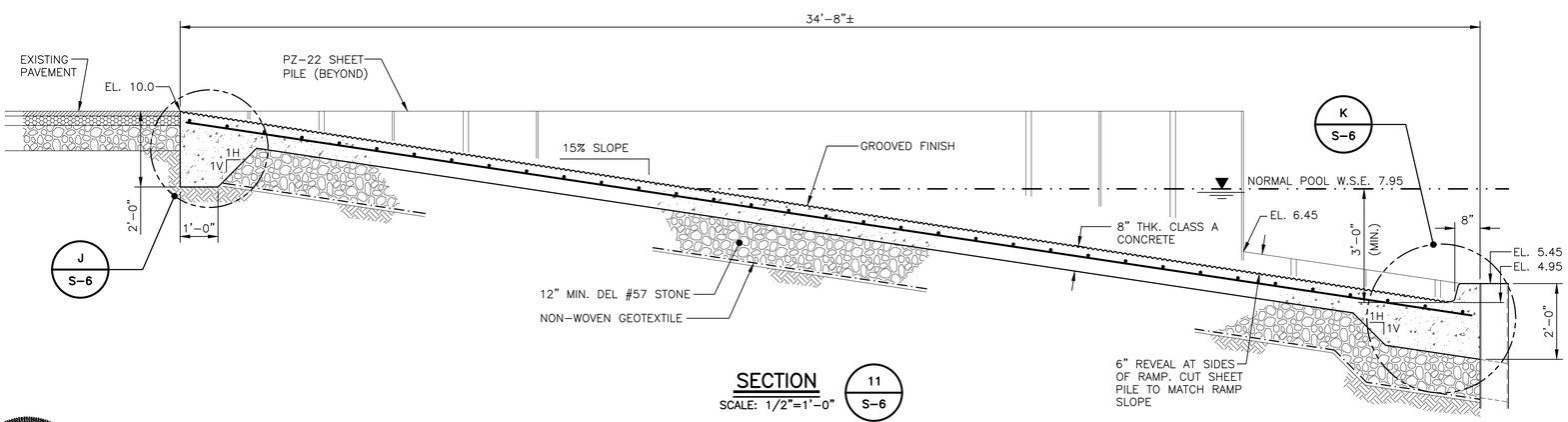

SECTION

SCALE: 1/2"=1'-0" (11 / S-6)

IT IS A VIOLATION OF LAW FOR ANY PERSON, UNLESS ACTING UNDER THE DIRECTION OF A LICENSED ENGINEER, TO ALTER THIS DOCUMENT.

THIS DRAWING WAS PREPARED AT THE SCALE INDICATED. INACCURACIES IN THE STATED SCALE MAY BE INTRODUCED WHEN DRAWINGS ARE REPRODUCED BY ANY MEANS. USE THE GRAPHIC SCALE BAR TO DETERMINE THE ACTUAL SCALE.

ROBERT R. BOWERS REGISTERED PROFESSIONAL ENGINEER No. 14412 DELAWARE

ROBERT R. BOWERS, P.E.
DE. P.E. NO. 14412

IN CHARGE OF RRB				
DESIGNED BY MAD				
CHECKED BY DRP				
DRAWN BY MK	0	02/02/2017	ISSUED FOR BID	RRB
	NO.	DATE	REVISION	INT.

O'BRIEN & GERE ENGINEERS, INC
EAST NORRITON, PA

STATE OF DELAWARE DNREC
DIVISION OF WATERSHED STEWARDSHIP
IMPROVEMENTS TO DELAWARE DAMS
DOVER, DELAWARE

DNREC CONTRACT No.: NAT17001-DAMCONST

STRUCTURAL
IMPROVEMENTS TO CRAIGS POND DAM

NEW BOAT RAMP DETAILS

FILE NO. 12804.61925 - S06

DATE 02/02/2017

S-6

I:\DE-DNREC_12804\61925 FLOOD-HAZ-MNGMN\DOCS\3-CRAIGS MILL POND\DWGS\SHEETS\49818-CM-S06-FD.DWG

SAVED: 8/31/16 3:47 PM

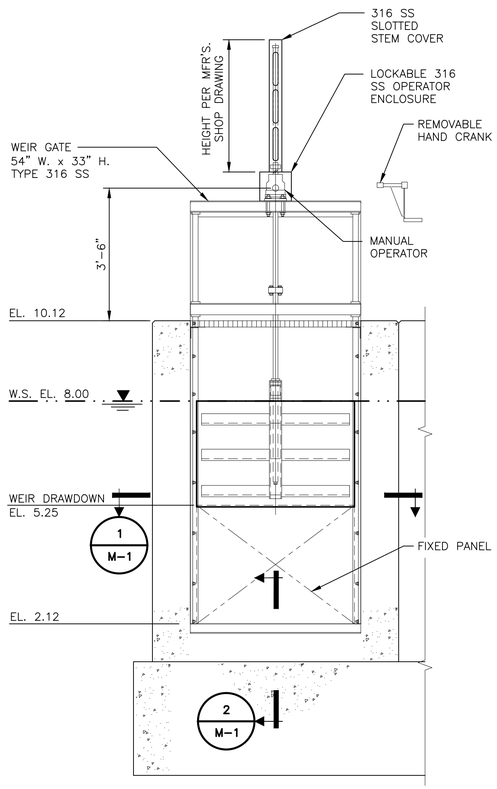

CHANNEL–MOUNTED SELF CONTAINED WEIR GATE

SCALE: 1/2"=1'-0"

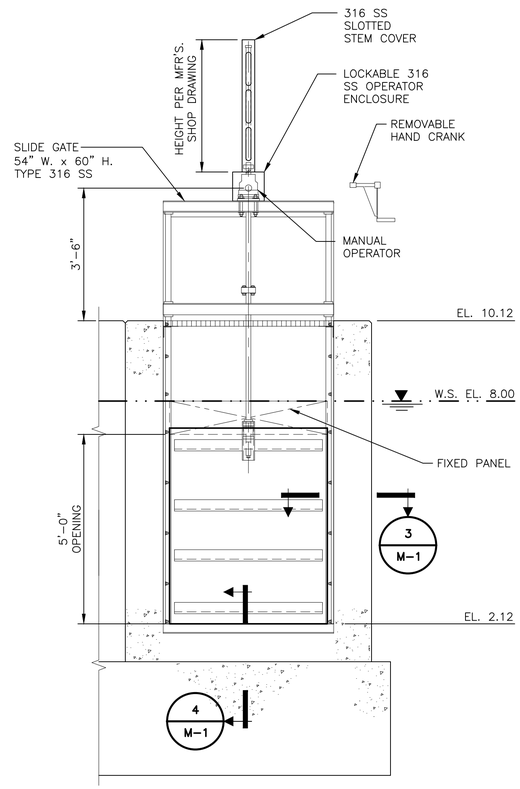

CHANNEL–MOUNTED SELF CONTAINED SLIDE GATE

SCALE: 1/2"=1'-0"

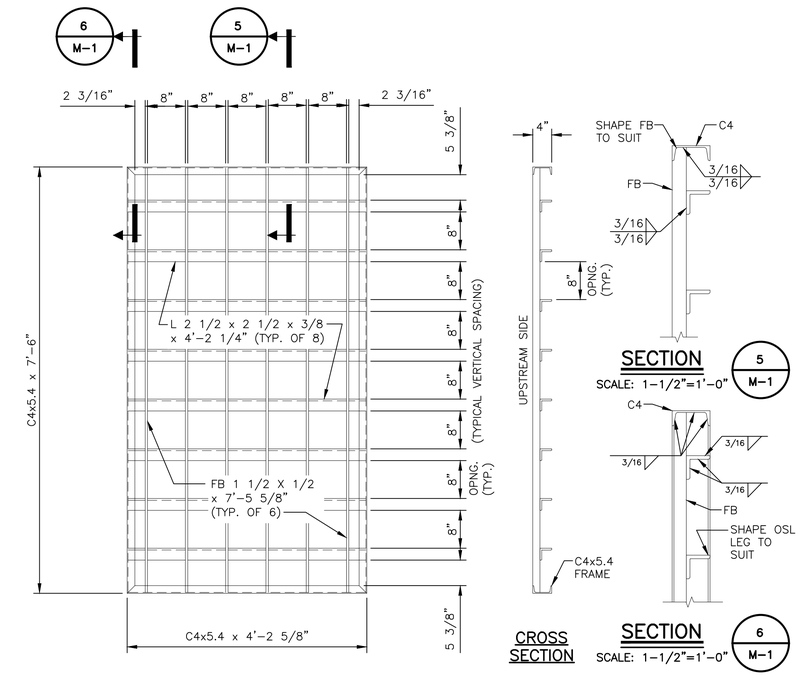

STEEL TRASH RACK DETAIL – (2) RACKS–ONE PER BAY

SCALE: 3/4" = 1'-0"

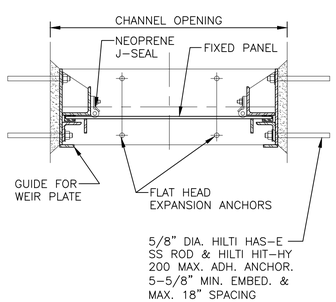

SECTION 1 M-1
NOT TO SCALE

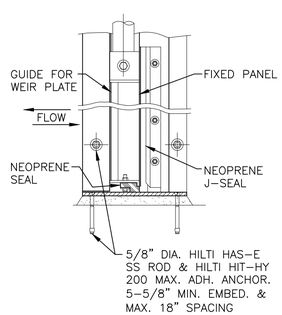

SECTION 2 M-1
NOT TO SCALE

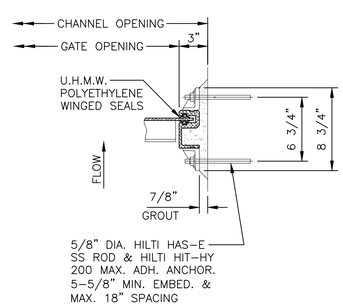

SECTION 3 M-1
NOT TO SCALE

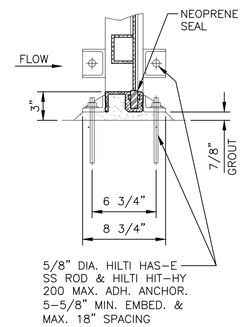

SECTION 4 M-1
NOT TO SCALE

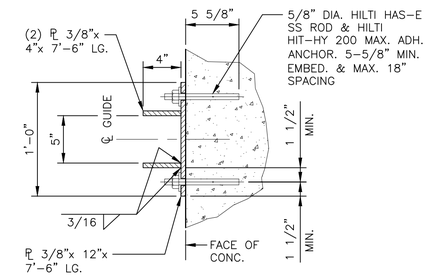

DETAIL B S-2
SCALE: 1-1/2"=1'-0"

STEEL TRASH RACK & STOP LOG GUIDE

PLAN GENERAL NOTES:

1. CONTRACTOR TO FIELD VERIFY ALL DIMENSIONS PRIOR TO ORDERING GATES OR PROCEEDING WITH ANY FABRICATION WORK.
2. ALUMINUM SURFACES IN CONTACT WITH CONCRETE TO BE FIELD COATED WITH ONE COAT OF COAL TAR EPOXY.
3. DETAILS SHOWN ON THIS DRAWING ARE REPRESENTATIVE OF GENERAL ARRANGEMENT/INSTALLATION REQUIREMENTS FOR THE STYLE OF GATE.
4. OPERATORS SHOWN ARE REPRESENTATIVE AND ARE NOT RELATED TO THE STYLE OF GATE. REFER TO MANUFACTURER'S SHOP DRAWING FOR SPECIFICATION OF OPERATOR.
5. ALL ANCHOR BOLTS SHALL BE STAINLESS STEEL INSTALLED PER MANUFACTURER'S REQUIREMENTS.
6. ALL STEEL SHALL BE HOT–DIPPED GALVANIZED PER STRUCTURAL STL. & ALUMINUM NOTES ON SHEET S–1.

1/2"=1'-0" 1 0 1 2 3 4 5
3/4"=1'-0" 1 0 1 2 3
1 1/2"=1'-0" 1 .5 0 1

IT IS A VIOLATION OF LAW FOR ANY PERSON, UNLESS ACTING UNDER THE DIRECTION OF A LICENSED ENGINEER, TO ALTER THIS DOCUMENT.

THIS DRAWING WAS PREPARED AT THE SCALE INDICATED. INACCURACIES IN THE STATED SCALE MAY BE INTRODUCED WHEN DRAWINGS ARE REPRODUCED BY ANY MEANS. USE THE GRAPHIC SCALE BAR TO DETERMINE THE ACTUAL SCALE.

ROBERT R. BOWERS REGISTERED PROFESSIONAL ENGINEER No. 14412 DELAWARE

ROBERT R. BOWERS, P.E.
DE. P.E. NO. 14412

IN CHARGE OF	RRB
DESIGNED BY	DRP
CHECKED BY	DRP
DRAWN BY	MK

NO.	DATE	REVISION	INT.
0	02/02/2017	ISSUED FOR BID	RRB

O'BRIEN & GERE ENGINEERS, INC
EAST NORRITON, PA

STATE OF DELAWARE DNREC
DIVISION OF WATERSHED STEWARDSHIP
IMPROVEMENTS TO DELAWARE DAMS
DOVER, DELAWARE

DNREC CONTRACT No.: NAT17001-DAMCONST

MECHANICAL
IMPROVEMENTS TO CRAIGS POND DAM
NEW GATES, TRASH RACK & STOP LOG GUIDE DETAILS

FILE NO. 12804.61925 -M01
DATE 02/02/2017

M-1

I:\DE-DONREC.12804\61925-FLOOD-HAZ-MNGMN\DOCS\3-CRAIGS MILL POND\DWGS\SHEETS\49818-CMA-M01-FD.DWG

SAVED: 7/18/16 10:40 AM

BORING LOG — BORING NO. B-1

O'BRIEN & GERE

PROJECT:	Craigs Mill Dam	SHEET 1 OF 2	
CLIENT:	Delaware Dept. of Natural Resources & Environmental Control	JOB NO.	49818
INSPECTOR:	M. Natiale	GROUND ELEV.	10.5
DRILLING CONTRACTOR:	Geo-Technology Associates, Inc.	DATUM	Topo
DRILLER:	D. Hans, Jr.	DATE STARTED	7/18/2014
PURPOSE:	Geotechnical Investigation	DATE FINISHED	7/18/2014
DRILLING METHOD:	HSA, Auto-Hammer		
DRILL RIG TYPE:	CME 550X ATV Mounted Rig		

	SAMPLE	CORE	CASING
TYPE	SS	---	HSA
DIA.	2"	---	3.25"

DEPTH (ft)	Sample Type	Number	Blows/6" (N-Value)	Penetration/ Recovery	MATERIAL DESCRIPTION	Graphic Log	USCS Symbol	Stratum Change	Field Testing and Sampling	Well Diagram	REMARKS
					10.2 ASPHALT - 3" 0.3						
2	SS	1	5-6-6 (12)	1.5'/ 1.2'	POORLY GRADED SAND WITH SILT, fine to medium sand, moist, medium dense, tan 5.0 2.5	SP-SM	FILL				
4	SS	2	3-5-5-6 (15)	2.0'/ 1.2'	CLAYEY SAND, fine to medium sand, moist, medium dense gray, trace gravel 6.0 4.5	SC					DTW = 6.5'
6	SS	3	6-3-2-2 (5)	2.0'/ 1.3'	SILTY SAND, fine to medium sand, wet, loose, dark brown, trace roots 5.5 7.0	SM					
8	SS	4	1-3-6-7 (9)	2.0'/ 1.0'	POORLY GRADED SAND WITH SILT AND GRAVEL, fine to coarse sand, wet, medium dense, light gray 8.0	SP-SM					
10	SS	5	6-9-12-13 (21)	2.0'/ 1.2'	POORLY GRADED SAND WITH SILT, fine to coarse sand, wet, medium dense, light gray, trace gravel	SP-SM	ALLUVIAL				
12											
14	SS	6	3-6-7-9 (13)	2.0'/ 1.8'							
16											
18	SS	7	4-2-2-2 (4)	2.0'/ 1.8'	... changes to loose						
20											
22					POORLY GRADED SAND WITH SILT, fine to coarse sand, wet, medium dense, light gray, trace gravel *(continued)*						
24	SS	8	2-6-7 (11)	2.0'/ 1.0'	... change to medium dense						
26											
28	SS	9	4-5-5-5 (10)	2.0'/ 1.0'	... changes to trace gravel						
30											
32											
34	SS	10	1-2-4-12 (6)	2.0'/ 1.2'	... changes to fine sand, no gravel, tan	SP-SM	ALLUVIAL				
36											
38	SS	11	4-6-17-17 (23)	2.0'/ 0.9'	... changest to dark tan						
40											
42											
44	SS	12	5-9-10-10 (19)	2.0'/ 1.0'	34.5 45.0						
46					End of Borehole at 45.0'.						
48											

BORING LOG — BORING NO. B-2

O'BRIEN & GERE

PROJECT:	Craigs Mill Dam	SHEET 1 OF 2	
CLIENT:	Delaware Dept. of Natural Resources & Environmental Control	JOB NO.	49818
INSPECTOR:	M. Natiale	GROUND ELEV.	11.6
DRILLING CONTRACTOR:	Geo-Technology Associates, Inc.	DATUM	Topo
DRILLER:	D. Hans, Jr.	DATE STARTED	8/4/2015
PURPOSE:	Geotechnical Investigation	DATE FINISHED	8/4/2015
DRILLING METHOD:	Mud Rotary, Auto-Hammer		
DRILL RIG TYPE:	CME 550X ATV Mounted Rig		

	SAMPLE	CORE	CASING
TYPE	SS	---	HSA
DIA.	2"	---	3.25"

DEPTH (ft)	Sample Type	Number	Blows/6" (N-Value)	Penetration/ Recovery	MATERIAL DESCRIPTION	Graphic Log	USCS Symbol	Stratum Change	Field Testing and Sampling	Well Diagram	REMARKS
					11.2 ASPHALT - 5" 0.4						
2	SS	1	5-10-10 (20)	1.5'/ 1.2'	POORLY GRADED SAND WITH SILT AND GRAVEL, fine to coarse sand, moist, medium dense, brown and light brown 9.1 2.5	SP-SM	FILL				
4	SS	2	10-8-6-6 (14)	2.0'/ 1.3'	POORLY GRADED SAND WITH SILT, fine to medium sand, moist, medium dense, orangish brown	SP-SM					
6	SS	3	7-5-5-5 (10)	2.0'/ 0.1'							
8	SS	4	4-5-6-6 (11)	2.0'/ 0.1'	3.6 8.0	SM					Gravel in tip of SS S-4
10	SS	5	2-2-3-4 (5)	2.0'/ 1.2'	SILTY SAND, fine to medium sand, wet, loose, tan 5.1 10.5	SP-SM	ALLUVIAL				HSA from 0 to 8', Mud Rotary after 8'
12	SS	6	3-5-6-7 (11)	2.0'/ 1.8'	POORLY GRADED SAND WITH SILT AND GRAVEL, fine to coarse sand, wet, loose, gray, rounded gravel 5.4 12.0	SP-SM					DTW = 9.0'
14	SS	7	3-4-5-4 (9)	2.0'/ 1.0'	POORLY GRADED SAND WITH SILT, fine to coarse sand, wet, loose, light gray	SP-SM					
16											
18	SS	8	2-2-4-3 (6)	2.0'/ 0.3'	6.4 18.0 SILTY SAND, fine sand, saturated, loose, brown	SM					
20											
22					SILTY SAND, fine sand, saturated, loose, brown *(continued)*						
24	SS	9	6-2-3-3 (5)	2.0'/ 1.8'	... change to wet, trace clay	SM					
26											
28	SS	10	6-10-13-14 (23)	2.0'/ 1.6'	... changes to medium dense, orangish brown 18.4 30.0						
30					End of Borehole at 30.0'.						
32											
34											
36											
38											
40											
42											
44											
46											
48											

BORING LOG — BORING NO. B-3

O'BRIEN & GERE

PROJECT:	Craigs Mill Dam	SHEET 1 OF 2	
CLIENT:	Delaware Dept. of Natural Resources & Environmental Control	JOB NO.	49818
INSPECTOR:	M. Natiale	GROUND ELEV.	11.8
DRILLING CONTRACTOR:	Geo-Technology Associates, Inc.	DATUM	Topo
DRILLER:	D. Hans, Jr.	DATE STARTED	8/4/2015
PURPOSE:	Geotechnical Investigation	DATE FINISHED	8/4/2015
DRILLING METHOD:	Mud Rotary, Auto-Hammer		
DRILL RIG TYPE:	CME 550X ATV Mounted Rig		

	SAMPLE	CORE	CASING
TYPE	AU	---	HSA
DIA.	2"	---	3.25"

DEPTH (ft)	Sample Type	Number	Blows/6" (N-Value)	Penetration/ Recovery	MATERIAL DESCRIPTION	Graphic Log	USCS Symbol	Stratum Change	Field Testing and Sampling	Well Diagram	REMARKS
					11.4 ASPHALT - 5" 0.3						
2	AU	1	0	2.0'/ 2.0'	SILTY SAND WITH GRAVEL, fine to coarse sand, moist, medium dense, brown and gray	SM	FILL				
4	AU	2	0	2.0'/ 2.0'	7.6 4.0	SC					
6	SS	3	6-6-4-4 (10)	2.0'/ 1.5'	CLAYEY SAND, fine to medium sand, moist, medium dense, tan, trace gravel 5.8 6.8	SP-SC					Gravel in tip of SS S-4
8	SS	4	4-7-7-7 (14)	2.0'/ 1.8'	POORLY GRADED SAND WITH CLAY, fine to medium sand, moist, medium dense, tan 3.8 8.0	SM					HSA from 0 to 8', Mud Rotary after 8'
10	SS	5	4-4-4-2 (8)	2.0'/ 1.3'	SILTY SAND, fine to medium sand, wet, loose, tan 1.8 10.0	SC	ALLUVIAL				DTW = 9.0'
12	SS	6	1-1-1-1 (2)	2.0'/ 1.0'	CLAYEY SAND, fine to medium sand, wet, very loose, brown, trace organics (decomposed wood, roots) -0.2 12.0	SM					
14	SS	7	1-1-1-1 (2)	2.0'/ 1.5'	SILTY SAND, fine to medium sand, saturated, very loose, tan 4.0 16.0	SP-SM					
16					POORLY GRADED SAND WITH SILT, fine to medium sand, wet, medium dense, tan						
18	SS	8	9-13-16-18 (29)	2.0'/ 1.2'							
20											
22					POORLY GRADED SAND WITH SILT, fine to medium sand, wet, medium dense, tan *(continued)* 23.0	SP-SM					
24	SS	9	6-4-3-4 (7)	2.0'/ 1.2'	CLAYEY SAND, fine to coarse sand, wet, very loose, tan with light gray	SC					
26											
28	SS	10	8-6-6-13 (12)	2.0'/ 1.8'	... changes to fine sand, medium dense 28.2 30.0						
30					End of Borehole at 30.0'.						
32											
34											
36											
38											
40											
42											
44											
46											
48											

ROBERT R. BOWERS REGISTERED No. 14412 DELAWARE PROFESSIONAL ENGINEER

ROBERT R. BOWERS, P.E.
DE. P.E. NO. 14412

IT IS A VIOLATION OF LAW FOR ANY PERSON, UNLESS ACTING UNDER THE DIRECTION OF A LICENSED ENGINEER, TO ALTER THIS DOCUMENT.

THIS DRAWING WAS PREPARED AT THE SCALE INDICATED. INACCURACIES IN THE STATED SCALE MAY BE INTRODUCED WHEN DRAWINGS ARE REPRODUCED BY ANY MEANS. USE THE GRAPHIC SCALE BAR TO DETERMINE THE ACTUAL SCALE.

IN CHARGE OF	RRB
DESIGNED BY	SMS
CHECKED BY	DRP
DRAWN BY	MK

NO.	DATE	REVISION	INT.
0	02/02/2017	ISSUED FOR BID	RRB

O'BRIEN & GERE ENGINEERS, INC
EAST NORRITON, PA

STATE OF DELAWARE DNREC
DIVISION OF WATERSHED STEWARDSHIP
IMPROVEMENTS TO DELAWARE DAMS
DOVER, DELAWARE

DNREC CONTRACT No.: NAT17001-DAMCONST

REFERENCE
IMPROVEMENTS TO CRAIGS POND DAM

BORING LOGS

FILE NO. 12804.61925 -R01

DATE 02/02/2017

REF-1

I:\DE-DONREC.12804\61925.FLOOD-HAZ-MNGMN\DOCS\3-CRAIGS MILL POND\DWG\SHEETS\49818-CM-R01-FD.DWG