DELAWARE DEPARTMENT OF NATURAL RESOURCES AND ENVIRONMENTAL CONTROL

BROADKILL BEACH DUNE ENHANCEMENTS

CONTRACT NO. NAT-201701/BROAD.DUNE

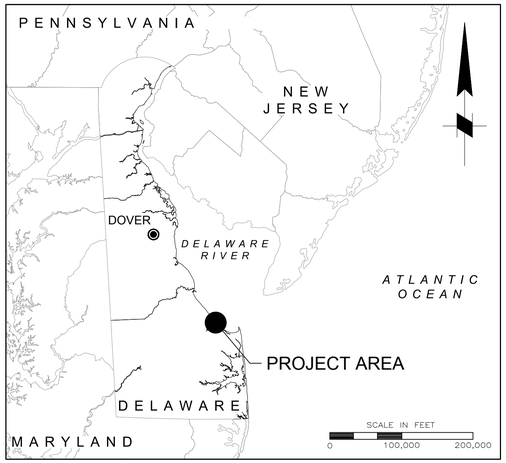

BROADKILL BEACH DUNE ENHANCEMENTS VICINITY MAP

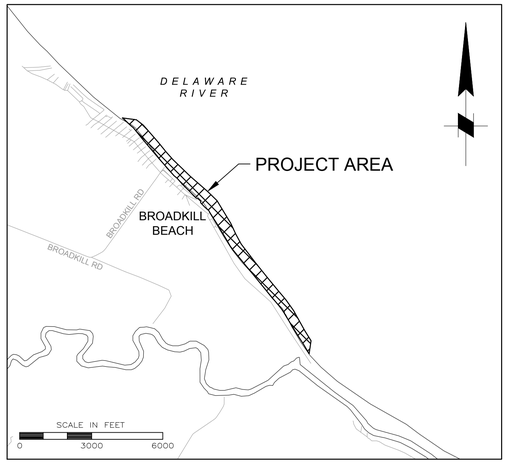

BROADKILL BEACH DUNE ENHANCEMENTS LOCATION MAP

INDEX OF DRAWINGS

DWG NO.	TITLE	SHEET NO.
C-100	COVER/LOCATION MAP AND INDEX	C-100
C-101	PLAN SHEET 1	C-101
C-102	PLAN SHEET 2	C-102
C-103	PLAN SHEET 3	C-103
C-104	PLAN SHEET 4	C-104
C-105	PLAN SHEET 5	C-105
C-301	TYPICAL DETAIL 1	C-301
C-302	TYPICAL DETAIL 2	C-302

GENERAL NOTES

1. HORIZONTAL DATUM IS DELAWARE STATE PLANE NAD 83 (ZONE 700) U.S. SURVEY FEET.
2. ELEVATIONS ON THESE DRAWINGS ARE REFERENCED TO NORTH AMERICAN VERTICAL DATUM 1988 (NAVD 88).
3. DRAWINGS PROVIDED BY THE U.S ARMY CORPS OF ENGINEERS, PHILADELPHIA DISTRICT.

Mark	Description	Date	Appr.	Mark	Description	Date	Appr.

Designed by: DCU
Dwn by: EGC
Ckd by: CFB
Reviewed by: JRB
Submitted by: DCU
Date: MAR 2017
Drawing Name: C-100
Rev:
Scale: AS SHOWN
Plot scale: 1 = 1

GBA ENGINEERS ★ SURVEYORS
9008 Yellow Brick Rd.
Unit 3
Baltimore, MD 21237
Phone (410) 882-5595

DELAWARE FISH AND WILDLIFE
BROADKILL BEACH DUNE ENHANCEMENTS
CONTRACT NO. NAT-201701/BROAD.DUNE

COVER/LOCATION MAP AND INDEX

DANIEL C. WILSON No. 19938 DELAWARE PROFESSIONAL ENGINEER

C-100

P:\BROADKILL BEACH DUNE ENHANCEMENTS\DWG\C-100.dwg

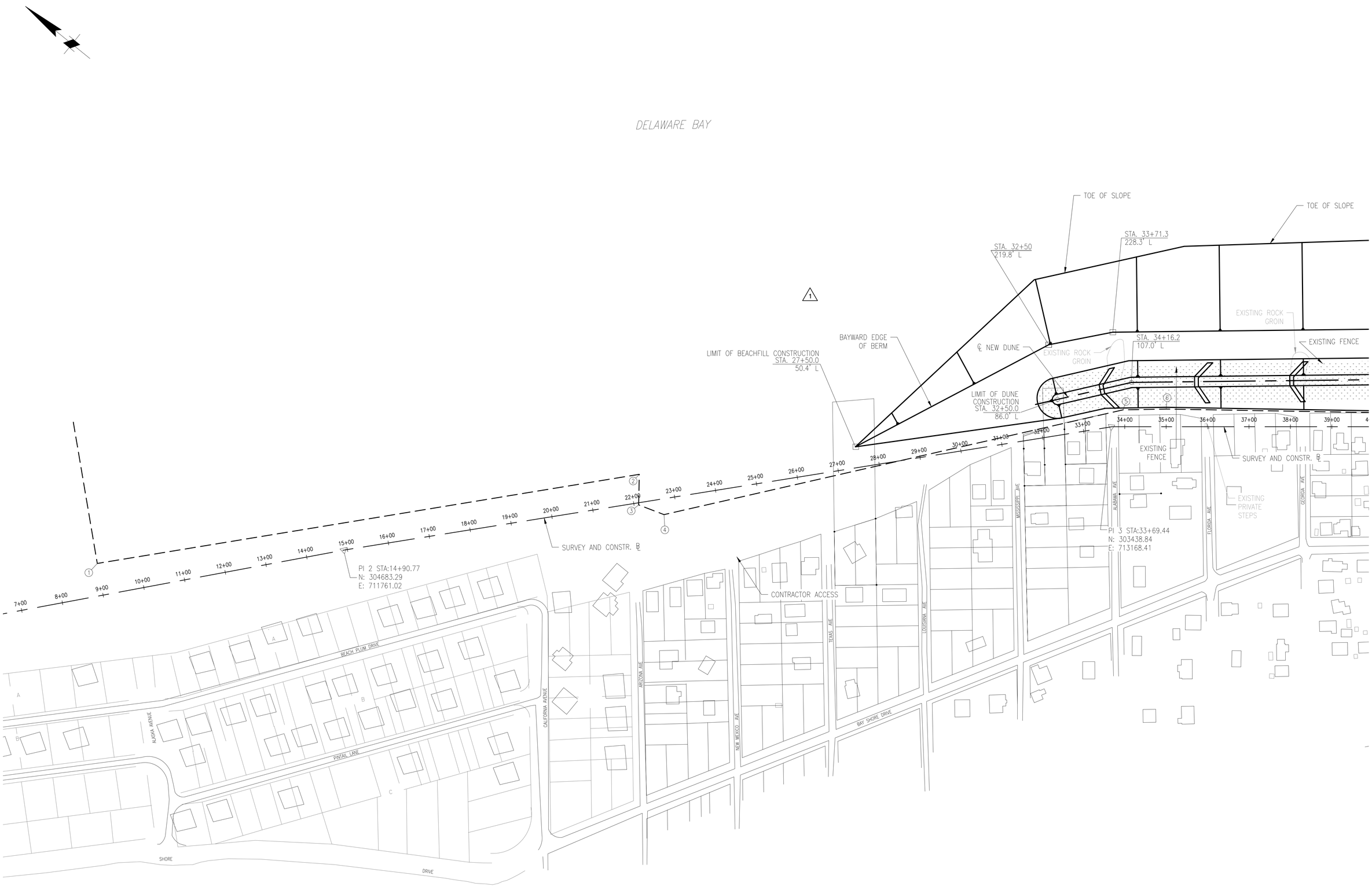

Mark	Description	Date	Appr.	Mark	Description	Date	Appr.

Designed by: DCU
Dwn by: ECC
Ckd by: CFB
Reviewed by: JRB
Submitted by: DCU
Date: MAR 2017
Rev.
Drawing Name : C101-105
Scale: AS SHOWN
Plot scale: 1 = 1

GBA
9029 Yellow Brick Rd.
Unit D
Baltimore, MD 21237
Phone (410) 682-5595
ENGINEERS ★ SURVEYORS

DELAWARE FISH AND WILDLIFE
BROADKILL BEACH DUNE ENHANCEMENTS
CONTRACT NO. NAT-201701/BROAD.DUNE

PLAN SHEET 1

No. 19938
PROFESSIONAL ENGINEER

C-101

P:\BROADKILL BEACH DUNE ENHANCEMENTS\DWG\C-101 - C-105.dwg

DELAWARE BAY

BAYWARD EDGE OF BERM

STA. 50+00.0
246.8' L

STA. 57+98.2
249.3' L

TOE OF SLOPE

BAYWARD EDGE OF BERM

STA. 65+00.0
261.4' L

STA. 70+00.0
306.6' L

EXISTING TIMBER BULKHEAD/GROIN

EXISTING ROCK GROIN

℄ NEW DUNE

EXISTING TIMBER BULKHEAD/GROIN

EXISTING TIMBER BULKHEAD/GROIN

EXISTING TIMBER BULKHEAD/GROIN

EXISTING FENCE

EXISTING PRIVATE STEPS

STA. 59+01.0
86.5' L

STA. 61+71.3
102.2' L

EXISTING TIMBER BULKHEAD/GROIN

STA. 65+01.5
81.2' L

EXISTING PRIVATE STEPS

℄ NEW DUNE

STA. 69+95.4
106.8' L

EXISTING PRIVATE STEPS

EXISTING PRIVATE STEPS

7 8 9 10 11 12 13 14 15 16

40+00 41+00 42+00 43+00 44+00 45+00 46+00 47+00 48+00 49+00 50+00 51+00 52+00 53+00 54+00 55+00 56+00 57+00 58+00 59+00 60+00 61+00 62+00 63+00 64+00 65+00 66+00 67+00 68+00 69+00 70+00 71+00 72+00 73

CONTRACTOR ACCESS

CONTRACTOR ACCESS

EXISTING CROSSOVER

CONTRACTOR ACCESS

EXISTING CROSSOVER

CONTRACTOR ACCESS

PI 5 STA:67+31.27
N: 300934.51
E: 715404.23

EXISTING CROSSOVER

CONTRACTOR ACCESS

S. CAROLINA AVE.

N. CAROLINA AVE

WEST VIRGINIA AVE

VIRGINIA AVE

MARYLAND AVE

DELAWARE AVE

BAY FRONT ROAD

BROADWAY ROAD

ADAMS AVENUE

JEFFERSON AVENUE

MADISON AVENUE

MONROE AVENUE

JACKSON AVE

TRUMAN AVE.

BAY SHORE DRIVE

CONTROL PONT C30

BAY SHORE DRIVE

PI 4 STA:54+47.97
N: 301832.35
E: 714487.31

TANK

DELAWARE STATE ROUTE 16

BROADKILL

SOUND

CONTROL PONT BB3

PRIME HOOK NATIONAL WILDLIFE REFUGE

BROADKILL BEACH

LEGEND

DUNE GRASS PLANTING AREA

0 100' 200'
GRAPHIC SCALE

Mark	Description	Date	Appr.	Mark	Description	Date	Appr.

Designed by: DCU
Dwn by: ECC
Ckd by: CFB
Reviewed by: JRB
Submitted by: DCU
Date: MAR 2017
Rev.
Drawing Name : C101-105
Scale: AS SHOWN
Plot scale: 1 = 1

GBA
9908 Yellow Brick Rd.
Unit C
Baltimore, MD 21237
Phone (410) 682-5595
ENGINEERS ★ SURVEYORS

DELAWARE FISH AND WILDLIFE
BROADKILL BEACH DUNE ENHANCEMENTS
CONTRACT NO. NAT-201701/BROAD.DUNE

PLAN SHEET 2

DELAWARE LICENSED PROFESSIONAL ENGINEER
No. 19938

C-102

P:\BROADKILL BEACH DUNE ENHANCEMENTS\DWG\C-101 - C-105.dwg

DELAWARE BAY

STA. 75+00
369.1' L

TOE OF SLOPE

STA. 81+03.6
402.2' L

BAYWARD EDGE OF BERM

STA. 90+00.0
268.8' L

TOE OF SLOPE

STA. 95+00.0
219.6' L

BAYWARD EDGE OF BERM

STA.100+00.0
184.5' L

STA.105+00.0
193.1' L

EXISTING FENCE

EXISTING PILINGS

EXISTING PRIVATE STEPS

STA. 81+38.5
184.3' L

℄ NEW DUNE

EXISTING PRIVATE STEPS

EXISTING PRIVATE STEPS

EXISTING PRIVATE STEPS

STA. 98+25.1
10.5' R

℄ NEW DUNE

+00 74+00 75+00 76+00 77+00 78+00 79+00 80+00 81+00 82+00 83+00 84+00 85+00 86+00 87+00 88+00 89+00 90+00 91+00 92+00 93+00 94+00 95+00 96+00 97+00 98+00 99+00 100+00 101+00 102+00 103+00 104+00 105+00 106+

SURVEY CONTROL LINE

BAY SHORE DRIVE

HOOSIER AVE.

TUCK AVE.

POOK AVE.

FILMORE AVE.

BAY FRONT RD.

PI 6 STA:77+23.52
N: 300182.27
E: 716051.29

PI 7 STA:79+09.32
OFFSET 83.93' RT.
N: 299989.76
E: 716118.41

PI 8 STA:83+83.09
OFFSET 178.80' RT.
N: 299580.94
E: 716375.95

PI 9 STA:85+29.64
N: 299597.84
E: 716606.51

BAY SHORE DRIVE

FROST AVE.

SHORE AVE.

SURVEY AND CONSTR. ℄

LOUNSBERY AVE.

VARLEY AVE.

BAY SHORE DRIVE

PI 10 STA:99+18.81
N: 298430.78
E: 717360.01

BROADKILL SOUND

PRIME HOOK NATIONAL WILDLIFE REFUGE

BROADKILL BEACH

LEGEND

DUNE GRASS PLANTING AREA

0 100' 200'
GRAPHIC SCALE

Mark	Description	Date	Appr.

Mark	Description	Date	Appr.

Rev.

Date: MAR 2017

Drawing Name : C101-105

Scale: AS SHOWN

Plot scale: 1 = 1

Designed by: DCU

Dwn by: EGC

Ckd by: CFB

Reviewed by: JRB

Submitted by: DCU

GBA
ENGINEERS ★ SURVEYORS
9608 Yellow Brick Rd.
Unit O
Baltimore, MD 21237
Phone (410) 682-5595

DELAWARE FISH AND WILDLIFE
BROADKILL BEACH DUNE ENHANCEMENTS
CONTRACT NO. NAI-201701/BROAD.DUNE

PLAN SHEET 3

STEPHEN C. UNGER No. 19938 PROFESSIONAL ENGINEER

C-103

P:\BROADKILL BEACH DUNE ENHANCEMENTS\DWG\C-101 - C-105.dwg

DELAWARE BAY

STA.110+00.0
201.8' L

TOE OF SLOPE

STA.115+00.0
201.9' L

BAYWARD EDGE
OF BERM

STA.120+00.0
202.2' L

STA.125+00.0
202.5' L

GROIN

STA.132+58.7
224.1' L

TOE OF SLOPE

BAYWARD EDGE
OF BERM

STA. 109+96.6
60.4' L

℄ NEW DUNE

EXISTING FENCE

EXISTING
PRIVATE STEPS

EXISTING
PRIVATE STEPS

℄ NEW DUNE

EXISTING ROCK
GROIN

STA. 132+69.2
102.2' L

EXISTING
PRIVATE STEPS

EXISTING
PRIVATE STEPS

107+00 108+50 109+00 110+00 111+00 112+00 113+00 114+00 115+00 116+00 117+00 118+00 119+00 120+00 121+00 122+00 123+00 124+00 125+00 126+00 127+00 128+00 129+00 130+00 131+00 132+00 133+00 134+00 135+00 136+00 137+00 138+00 139+00

40 41 42 43 44 45 46 47 48

TANK

EXISTING
CROSSOVER

BAY SHORE DRIVE

BAY SHORE DRIVE

SURVEY AND CONSTR. ℄

PI 11 STA:112+63.93
N: 297341.41
E: 718149.09

PI 12 STA:131+49.01
N: 295899.31
E: 719363.12

BROADKILL

BROADKILL SOUND

PRIME HOOK NATIONAL WILDLIFE REFUGE

BROADKILL BEACH

LEGEND

DUNE GRASS PLANTING AREA

0 100' 200'
GRAPHIC SCALE

Mark	Description	Date	Appr.	Mark	Description	Date	Appr.

Rev.

Date: MAR 2017

Drawing Name : C101-105

Scale: AS SHOWN

Plot scale: 1 = 1

Designed by: DCU

Dwn by: ECC

Ckd by: CFB

Reviewed by: JRB

Submitted by: DCU

GBA
ENGINEERS ★ SURVEYORS
9208 Yellow Brick Rd.
Unit D
Baltimore, MD 21237
Phone (410) 682-5595

DELAWARE FISH AND WILDLIFE
BROADKILL BEACH DUNE ENHANCEMENTS
CONTRACT NO. NAT-201701/BROAD.DUNE

PLAN SHEET 4

DAVID L. CRISPINO
No. 19938
PROFESSIONAL ENGINEER

C-104

P:\BROADKILL BEACH DUNE ENHANCEMENTS\DWG\C-101 - C-105.dwg

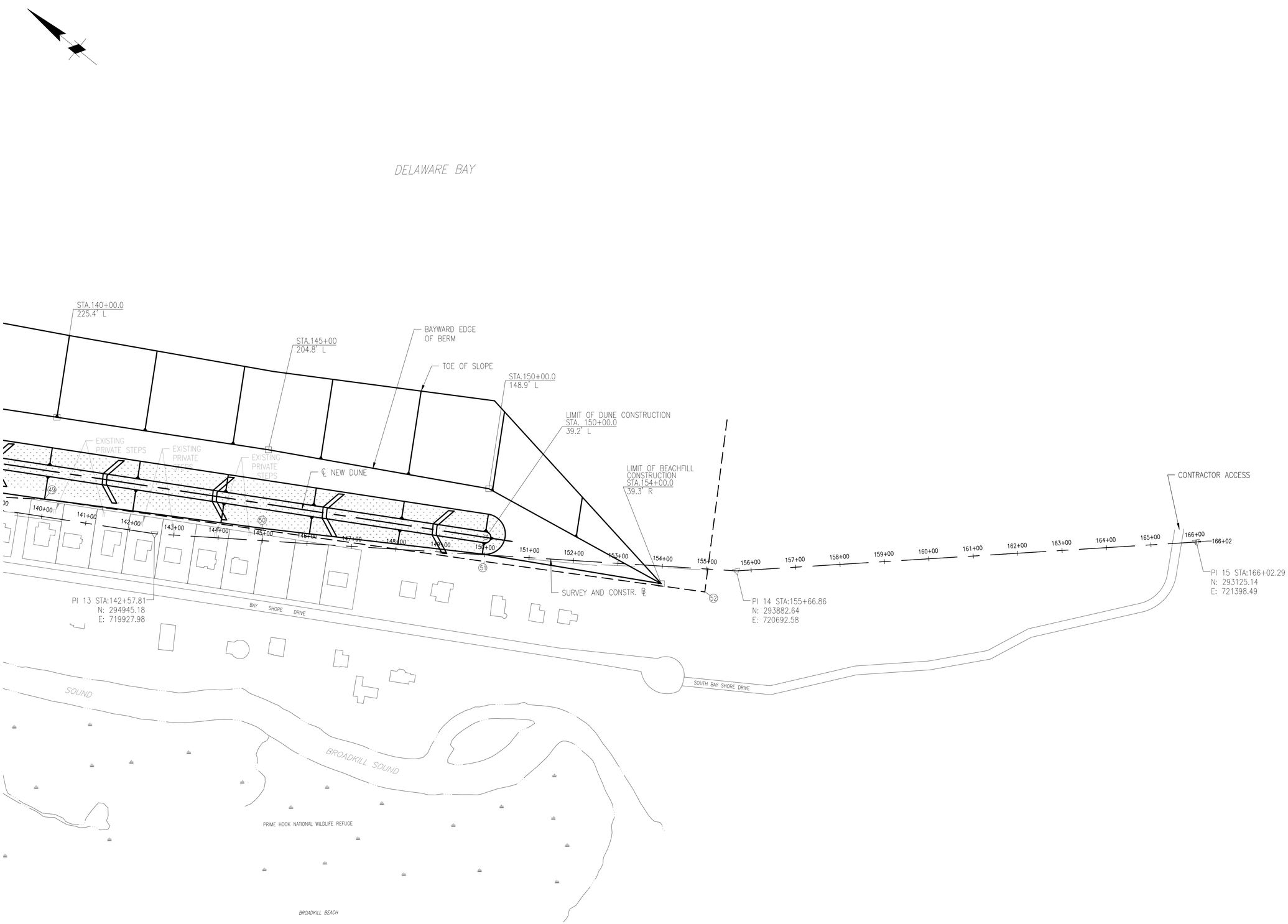

Mark	Description	Date	Appr.	Mark	Description	Date	Appr.

Designed by: DCU
Dwn by: ECC
Ckd by: CFB
Reviewed by: JRB
Submitted by: DCU
Date: MAR 2017
Rev.
Drawing Name : C101-105
Scale: AS SHOWN
Plot scale: 1 = 1

GBA
ENGINEERS ★ SURVEYORS
9009 Yellow Brick Rd.
Unit 0
Baltimore, MD 21237
Phone (410) 882-5595

DELAWARE FISH AND WILDLIFE
BROADKILL BEACH DUNE ENHANCEMENTS
CONTRACT NO. NAT-201701/BROAD.DUNE

PLAN SHEET 5

STATE OF DELAWARE
DAVID C. WILSON
No. 19938
PROFESSIONAL ENGINEER

C-105

P:\BROADKILL BEACH DUNE ENHANCEMENTS\DWG\C-101 - C-105.dwg

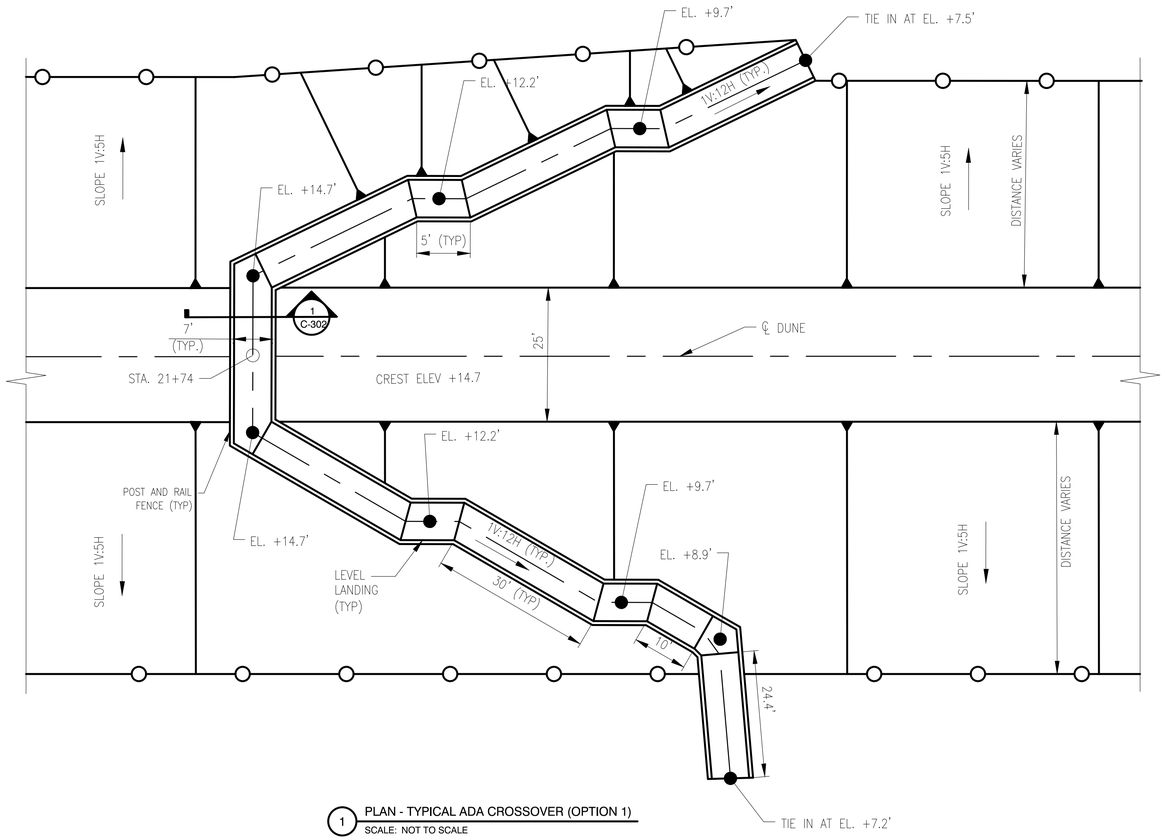

1 PLAN - TYPICAL ADA CROSSOVER (OPTION 1)
SCALE: NOT TO SCALE

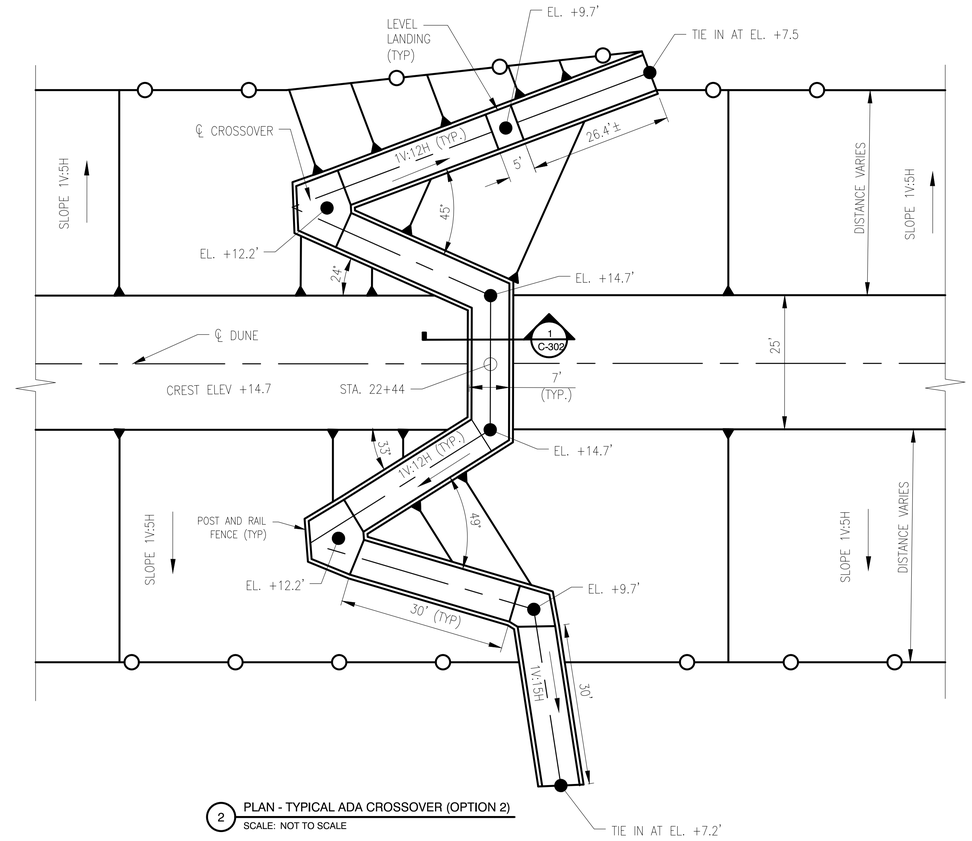

2 PLAN - TYPICAL ADA CROSSOVER (OPTION 2)
SCALE: NOT TO SCALE

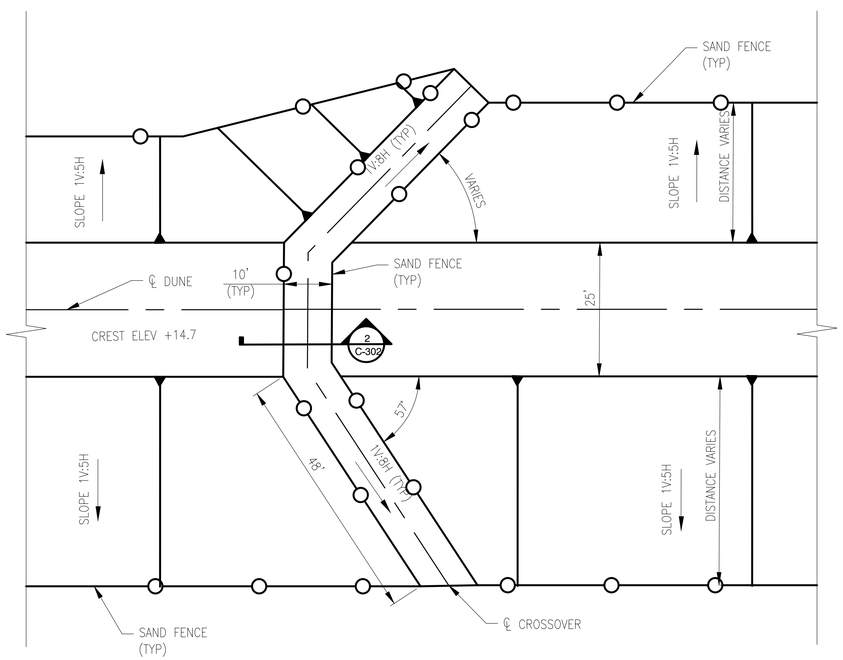

3 PLAN - TYPICAL PEDESTRIAN CROSSOVER
SCALE: NOT TO SCALE

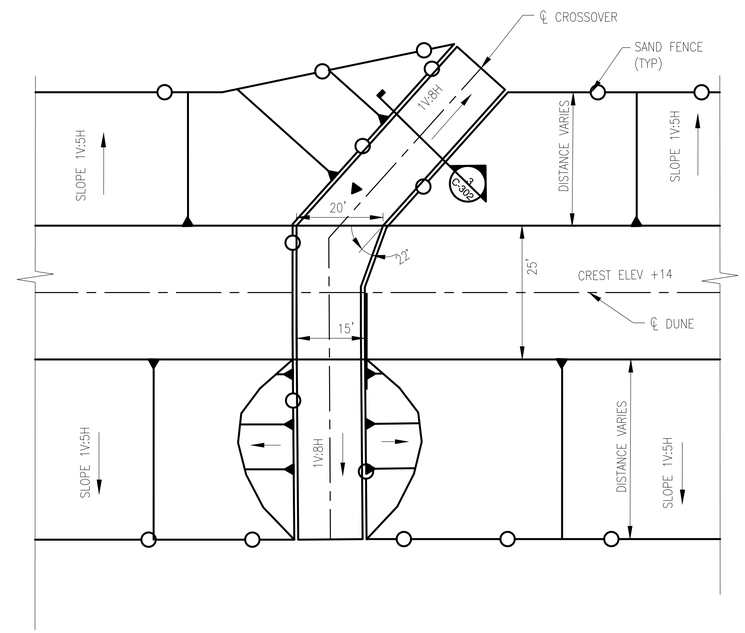

4 PLAN - TYPICAL VEHICULAR CROSSOVER
SCALE: NOT TO SCALE

Mark	Description	Date	Appr.	Mark	Description	Date	Appr.

Designed by: DCU
Dwn by: ECC
Ckd by: CFB
Reviewed by: JRB
Submitted by: DCU
Date: MAR 2017
Drawing Name: C301-302
Scale: AS SHOWN
Plot scale: 1 = 1
Rev.

GBA ENGINEERS ★ SURVEYORS
9008 Yellow Brick Rd.
Unit O
Baltimore, MD 21237
Phone (410) 682-5595

DELAWARE FISH AND WILDLIFE
BROADKILL BEACH DUNE ENHANCEMENTS
CONTRACT NO. NAT-201701/BROAD.DUNE

TYPICAL DETAIL 1

LICENSED PROFESSIONAL ENGINEER
No. 19938

C-301

P:\BROADKILL BEACH DUNE ENHANCEMENTS\DWG\C-301 - C-302.dwg

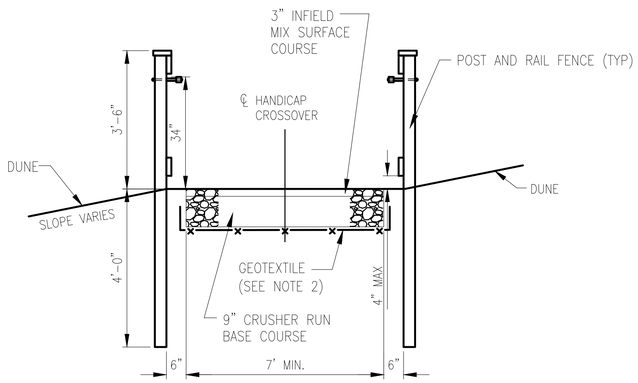

1 TYPICAL SECTION - HANDICAP CROSSOVER
SCALE: NOT TO SCALE

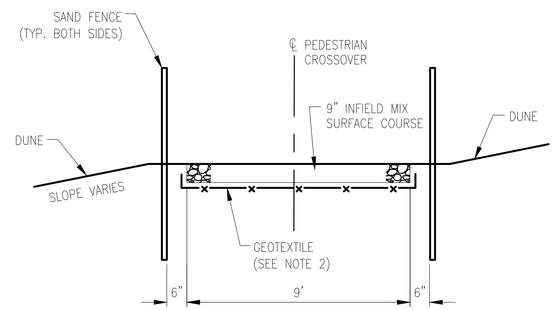

2 TYPICAL SECTION - PEDESTRIAN CROSSOVER
SCALE: NOT TO SCALE

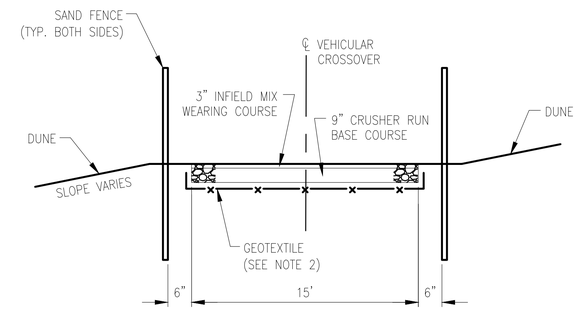

3 TYPICAL SECTION - VEHICLE CROSSOVER
SCALE: NOT TO SCALE

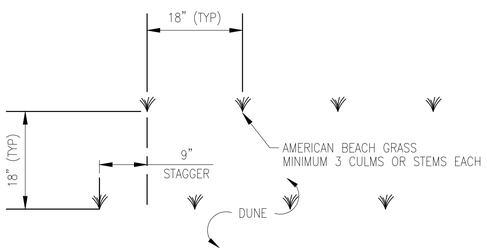

4 PLAN - DUNE GRASS PLANT LAYOUT
SCALE: NOT TO SCALE

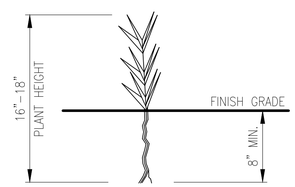

5 DETAIL - BEACHGRASS PLANTING
SCALE: NOT TO SCALE

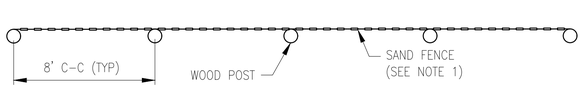

6 DETAIL - TYPICAL SAND FENCE LAYOUT
SCALE: NOT TO SCALE

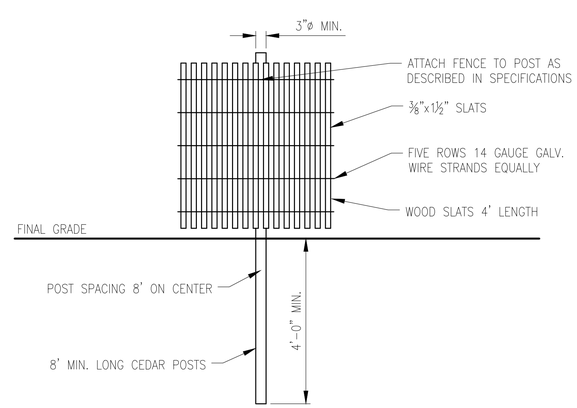

7 DETAIL - TYPICAL SAND FENCE AND POST
SCALE: NOT TO SCALE

NOTES:

1. SAND FENCE SHALL BE ATTACHED AS DESCRIBED IN THE SPECIFICATIONS AT CROSSOVERS ALONG THE LANDWARD FACE OF THE POSTS AT THE TOE OF THE EXISTING DUNE.

2. GAP BETWEEN GEOTEXTILE MATERIAL AND BASE MATERIAL SHOWN FOR CLARITY ONLY; THE GEOTEXTILE SHALL TURN VERTICAL AT THE EDGES FOR ONE-HALF THE TOTAL THICKNESS OF THE SECTION.

Mark	Description	Date	Appr.	Mark	Description	Date	Appr.

Designed by: DCU
Dwn by: ECC
Ckd by: CFB
Reviewed by: JRB
Submitted by: DCU
Date: MAR 2017
Rev.
Drawing Name : C301-302
Scale: AS SHOWN
Plot scale: 1 = 1

GBA ENGINEERS ★ SURVEYORS
9009 Yellow Brick Rd.
Unit 3
Baltimore, MD 21237
Phone (410) 882-5595

DELAWARE FISH AND WILDLIFE
BROADKILL BEACH DUNE ENHANCEMENTS
CONTRACT NO. NAT-201701/BROAD.DUNE

TYPICAL DETAIL 2

STATE OF DELAWARE
No. 19938
PROFESSIONAL ENGINEER

C-302

P:\BROADKILL BEACH DUNE ENHANCEMENTS\DWG\C-301 - C-302.dwg