CONTAMINATED MATERIALS MANAGEMENT PLAN (CMMP)

NVF SITE

PREPARED UNDER:

DNREC CONTRACT # NAT-10374

BLACK & VEATCH PROJECT # 042623

PREPARED FOR

Delaware Department of Natural Resources and Environmental Control - Site Investigation and Restoration Section

DNREC-SIRS

11 JANUARY 2016

PREPARED BY

BLACK & VEATCH
Building a world of difference.

200 BELLEVUE PARKWAY, SUITE 215
WILMINGTON, DELAWARE 19809

©Black & Veatch Holding Company 2012. All rights reserved.

BLACK & VEATCH
200 BELLEVUE PARKWAY, SUITE 215, WILMINGTON, DE 19809 USA
+1 913-458-6753 | NAUGHTERMJ@BV.COM

1.0 Background

The Department of Natural Resources and Environmental Control – Site Investigation and Restoration Section (DNREC-SIRS) has requested Black & Veatch Special Projects Corp. (BVSPC) to complete a Contaminated Materials Management Plan (CMMP) for the NVF Site. The Site is located at 1166 Yorklyn Road in Yorklyn, New Castle County, Delaware, approximately two miles south of the Pennsylvania and Delaware state line. The area to be covered by this CMMP is bounded by Yorklyn Road to the west, Red Clay Creek to the north, and the railroad tracks to the east.

The Site was historically used to manufacture paper and vulcanized fiber products. Manufacturing processes at the Site have included:

- Paper Making. The making of paper and vulcanized paper products at the NVF Site and the Marshall Brothers Paper Mill.
- Vulcanization. The vulcanization of paper products was performed by saturating the paper products with zinc chloride.
- Zinc Reclamation. The zinc chloride solutions used in the vulcanization process were removed from the vulcanized paper product by a leaching process. The reclaimed zinc chloride was concentrated through the use of evaporators, recycled by precipitation at a zinc reclamation plant and was returned to the process for reuse.

Black & Veatch has been working on the NVF site since 2009. The following assessments/actions have been completed at the Site (approximate number and type of samples available for the area is noted);

- 2009 – Black & Veatch, Phase 2 Site Investigation (26 surface soil, 29 subsurface soil, 5 surface water, 5 sediment, 3 groundwater)
- 2012, 2013 – Black & Veatch, Polynuclear Aromatic Hydrocarbon (PAH) sampling (28 surface soil samples)
- 2013 – Black & Veatch, Monitoring well installation and soil & groundwater sampling beneath Building #5 and the Caustic Effluent Treatment Area (9 surface soil, 11 subsurface soil, 11 groundwater)

While the previous sampling activities have covered a variety of areas in and around the NVF facility, this CMMP has been prepared for the specific area shown on Figure 1.

2.0 Redevelopment Activities

The current plans for redevelopment of the NVF Site can be divided into four main components. They are:

- Demolition and Hazardous Substance Removal
- PAH removal
- Gun Club Road Relocation
- Wetlands/Phyto-Remediation

Demolition
The first phase in the redevelopment process is to remove any remaining hazardous substances in the site buildings and to demolish the existing buildings not intended to be incorporated into the redevelopment. Figure 1 shows the buildings that will be demolished and those that will be incorporated into the redevelopment. Demolition activities will leave the slab and building foundations in place, limiting the intrusive activities associated with this work.

PAH Removal
Redevelopment plans for the site include filling an existing onsite repository with soil to facilitate use of the area in the future. To expedite this, the PAH contaminated soil identified in Figure 2 with NVF-PAH sample ID's has been relocated to the repository and capped with soil.

Gun Club Road Relocation
The current redevelopment plan calls for the existing Gun Club Road to be relocated south, away from the Red Clay Creek and out of the 100-year flood plain.

Wetlands/Phyto-Remediation
After Gun Club Road has been relocated, a wetlands/phytoremediation area is to be constructed. The creation of the wetlands will involve the greatest amount of intrusive activities that will be covered by the CMMP.

3.0 Existing Data

Black & Veatch has reviewed the available data from the previous investigations at the Site with the intent of providing a summary of known soil and groundwater contaminants at the Site. The findings of this review include:

- The 2009 Phase II performed by Black & Veatch indicated the following:
  - Groundwater sampled is impacted by Chloroform at levels exceeding the HSCA Standards. Dissolved metals detected at concentrations above the HSCA Standards in one or more samples included antimony, barium, cadmium, iron, manganese, nickel, and zinc. Total metals detected at concentrations above the HSCA Standards in one or more samples included aluminum, antimony, cadmium, iron, manganese, nickel, thallium, and zinc.
  - Surface water sampled at the Site is impacted by aluminum, barium, and zinc at concentrations above DNREC surface water quality standards.
  - Soils at the Site are impacted by aluminum, antimony, arsenic, cadmium, copper, iron, lead, manganese, vanadium, and zinc. In addition PAH's were found at levels above the applicable soil URS for protection of Human Health.
- The PAH sampling events conducted in 2012 and 2013 identified that nearly 2,000 cy of soil material contained PAH contamination that created an unacceptable risk for development of the Site for residential use. To address this risk the impacted soils were relocated to an onsite repository along Yorklyn Road.
- The 2013 soil and groundwater sampling indicated the following:
  - Groundwater at the Site is impacted by a number of metals that exceed the HSCA Standards, including aluminum, barium, cadmium, iron, lead, manganese, nickel, and zinc.
  - Soils at the Site are impacted with zinc at concentrations exceeding HSCA Standards. Arsenic levels exceeded HSCA standards for unrestricted use, but were below HSCA Standards for restricted use.
- The Final Remedial Investigation/Feasibility Study (RI/FS), dated December 15, 2015 for the NVF Site (DE-0071). The document summarizes all the sampling events and results for the Site.

Figure 2 shows the locations of samples that have been collected in the area covered by this CMMP. All data from sampling events can be found in Appendix A at the end of this document.

4.0 Intrusive Activities

This CMMP covers intrusive and/or earth-disturbing activities such as:

- Excavation and management of soils generated during concrete and/or pavement removal;
- Excavation and grading, as necessary, to support the future proposed construction;
- Excavation and management of soils associated with the installation of landscape elements; and
- Excavations that extend below the groundwater table.

Based on the identified environmental conditions and redevelopment plans, this CMMP describes the procedures to excavate, handle, and manage environmentally impacted soil and/or groundwater originating from the Site.

CMMP procedures are not required for certain previously anticipated activities. Such activities include, but are not limited to: concrete foundation and/or pavement removal that does not disturb the soil beneath; filling activities using soils that previously were evaluated during excavation; or filling activities using borrow obtained from a DNREC-SIRS approved source.

4.1 Responsibility for Management of Environmentally Impacted Materials

The activities listed below will be required prior to intrusive /earth-disturbing activities and will be completed by the consultant or contractor on behalf of the property owner. The requirements listed below are those that pertain to the management of environmentally impacted materials:

- The consultant or contractor will be prepared to provide the appropriate personnel, equipment, and supplies to comply with this CMMP, as applicable; and
- A health and safety representative will conduct a health and safety briefing. The representative will conduct a pre-construction safety meeting including personnel involved in proposed excavation activities. Workers engaged in soil disturbing activities

or review of earth disturbing activities will be Hazardous Waste Site Worker (HAZWOPER) trained in accordance with Title 29 of the Code of Federal Regulations, Part 1910.120(e) for general industry [29CFR1910.120(e)] or Title 29 of the Code of Federal Regulations, Part 1926.65 (e) for construction industry [29CFR1926.65(e)].

During intrusive activities, the contractor will oversee that the following activities are completed by site workers:

- Install and maintain sediment and erosion controls described in the DNREC approved Erosion and Sediment Control Plans (included in Appendix B);
- Provide the personnel, equipment, and supplies to excavate and stage impacted soils on the Site. Stockpiling of excavated soil may occur pending arrangements with disposal facilities, or as needed, to coordinate soil sampling and disposal issues.
- Prepare manifests (hazardous and non-hazardous wastes) for waste shipments of soils transported off site for treatment and/or disposal. Copies of completed manifests and certificates of disposal/destruction will be provided to the owner and the consultant. The consultant will maintain copies of completed waste manifests;
- Secure the construction site and the equipment. The contractor will provide adequate protective measures to limit potential public exposure to environmentally impacted materials; and
- Decontaminate equipment appropriately at the completion of soil or groundwater disturbing activities.

4.2 Excavation, Handling and Management of Impacted Materials

Intrusive activities will be performed using Federal Occupational Safety and Health Administration (OSHA) Level D personal protective equipment (PPE) criteria unless otherwise instructed by the Site Health and Safety Officer. The contractor will have dedicated personnel on Site to monitor for the presence of visibly impacted soil or groundwater during intrusive activities, such as those described above, are occurring. If impacted materials are encountered during excavation, the consultant will screen the affected area. Screening of the affected area will include, but is not limited to, screening with FID/PID or collection of samples to be screened at the DNREC-SIRS laboratory.

Soil Excavation, Transportation and Disposal

All excavated soils will be stockpiled and managed as described below:

1. A temporary staging area for the stockpiled soils will be designated, preferably on an area where pavement or concrete is present. The selected staging area will not impede site work. The temporary staging area will be constructed and maintained in compliance with the Erosion and Sediment Control requirements for the Site, if required. The soil pile will be covered with polyethylene sheeting at the end of each work day and secured.

2. During excavation of soil materials, the activity will be monitored by the contractor's designated personnel. Should the soil show visible signs of being impacted, the work will cease temporarily. Workers will leave the area and the consultant will screen the material.

3. In the event that debris (e.g., concrete, timbers, etc.) is encountered during excavation, the debris will be segregated and managed in accordance with applicable solid waste regulations.

4. All excavated soils will require off-site disposal at a permitted disposal facility, the contractor will be responsible for coordinating the analysis of soils (as specified by the disposal facility).

Underground Storage Tanks and Piping

Should underground storage tanks or associated piping be encountered during future site redevelopment activities, DNREC-SIRS and DNREC Tank Management Section (TMS) will be notified by the contractor. The underground storage tanks and associated piping will be drained of liquids, cleaned, removed, and disposed of off-site in accordance with the applicable Delaware Regulations Governing Underground Storage Tank Systems.

Groundwater

Based on the most recent groundwater data available, groundwater is anticipated to be encountered between approximately 7.5 and 15 feet below ground surface (bgs). Currently, the deepest excavation at the Site is anticipated to be 8 feet bgs. Therefore, groundwater may potentially be encountered during the redevelopment activities at the Site. Groundwater at the Site is impacted with metals.

Because the activities envisioned to be conducted under this plan may impact groundwater, should groundwater be encountered the following guidelines will be followed:

1. If separate-phase product, sheens, odors, discoloration or other indicia of environmental impact are observed in groundwater present in or entering an active excavation, any groundwater requiring removal from the excavation shall be contained (e.g., pools, tanks, trucks, or equivalent) and characterized by sampling and analyses for proper disposal.

2. Groundwater entering or present in active excavations where the soils in contact with groundwater exhibit separate-phase product, sheens, odors, discoloration and/or other indicia of environmental impact, to the extent it requires removal, will be handled in the same way groundwater is addressed in Item 1, above.

3. Soils removed from excavations described in Item 1, above, shall be contained in a secure storage/staging area that provides for the collection and containment of all runoff, leachate or seepage from the soils and such runoff, leachate or seepage will be handled in the same way groundwater is addressed in Item 1, above.

4. Groundwater entering or present in active excavations, to the extent it requires removal and does not exhibit separate-phase product, sheens, odors, discoloration or other indicia of environmental impact will be, upon receipt of approval from DNREC, discharged to the onsite treatment system.

4.3 Transportation of Contaminated Materials

This section details the procedures to be followed for off-site disposal of soils.

Excavated soils will be temporarily stockpiled pending characterization and evaluation of appropriate disposal options. Based on the screening and/or analytic results, soils will be transported to a permitted disposal facility. The following guidelines will be observed for off-site disposal of excavated soils:

- The trucks will be covered during transportation;
- No free liquids shall be present in the soil or leaking from trucks during the transportation of soil. The contractor shall ensure that the excavated materials comply with the requirements of the disposal facility;
- In the event soil should spill outside the loading area, the site workers will remove the spilled soil and return it to the stockpile (or transport container). This response will include public roadways entering and exiting the Site as well as the Site;
- Soils will be transported under appropriate manifest or shipping documents to the disposal facility; and
- Manifests will be signed by an authorized agent of the Owner prior to regulated waste materials leaving the site.

This plan is based on Black & Veatch's current understanding of the site conditions and on currently anticipated redevelopment plans. Changes in site conditions and/or redevelopment plans may impact portions of this plan.

N

0 35 70 140 Feet

NAD83 HARN State Plane Delaware, Feet

Buildings to Remain Intact
NVF Yorklyn Site
Yorklyn, New Castle County, DE

Figure 1

fer72181 12/12/2013 2:13:27 PM S:\GIS\NVF\MXDs\NVF Buildings to remain.mxd

N

0 35 70 140 Feet

NAD83 HARN State Plane Delaware, Feet

All Sample Locations - Soil, Sediment, Groundwater and Surface Water
NVF Yorklyn Site
Yorklyn, New Castle County, DE

Figure 2

fer72181 12/12/2013 3:32:23 PM S:\GIS\NVF\MXDs\NVF B&V all samples.mxd

APPENDIX A

2009 Phase II Lab Data

Sample ID	Delaware Default Background Surface Water [1]	Delaware URS for Protection of the Environment	EPA Region 3 BTAG Freshwater Surface Water	URS for Protection of the Environment (based on site-specific hardness)	NVF-SW-01	
Lab Sample Number					460-7016-1	
Sampling Date					10/19/2009 9:20:00 AM	
Matrix					Water	
Dilution Factor					1	
Units	(ug/L)	(ug/L)	(ug/L)	(ug/L)	ug/L	
					Low	
Metals						
Aluminum	200	87	87	NC	796	
Barium	4	4	4	NC	67.0	J
Cadmium					5.0	U
Calcium	NA	NA	116000	NC	31500	
Copper					4.7	J
Iron	300	1000	300	NC	1110	
Magnesium	NA	NA	82000	NC	11400	
Manganese	50	80	120	NC	77.8	
Potassium	NA	NA	53000	NC	9360	
Sodium	NA	NA	680000	NC	13600	
Vanadium					2.7	J
Zinc	110	110	120	167	12.0	J

QUALIFIERS

GC Semi VOA

U: Indicates the analyte was analyzed for but not detected.

GC/MS Semi VOA

*: Recovery or RPD exceeds control limits

J: Result is less than the RL but greater than or equal to the MDL and the concentration is an approximate value.

U: Indicates the analyte was analyzed for but not detected.

GC/MS VOA

U: Indicates the analyte was analyzed for but not detected.

General Chemistry

U: Indicates the analyte was analyzed for but not detected.

Metals

J: Result is less than the RL but greater than or equal to the MDL and the concentration is an approximate value.

U: Indicates the analyte was analyzed for but not detected.

Sample ID	NVF-SW-901		NVF-SW-02	
Lab Sample Number	460-7016-2		460-7016-3	
Sampling Date	10/19/2009 9:30:00 AM		10/19/2009 9:50:00 AM	
Matrix	Water		Water	
Dilution Factor	1		1	
Units	ug/L		ug/L	
	Low		Low	
Metals				
Aluminum	913		298	
Barium	68.8	J	59.8	J
Cadmium	1.4	J	5.0	U
Calcium	29800		29400	
Copper	19.7	J	25.0	U
Iron	1320		422	
Magnesium	11200		11000	
Manganese	100		28.1	
Potassium	8880		8770	
Sodium	12900		12800	
Vanadium	3.1	J	50.0	U
Zinc	13.8	J	8.6	J

QUALIFIERS

GC Semi VOA

U: Indicates the analyte was analyzed for but not

GC/MS Semi VOA

*: Recovery or RPD exceeds control limits

J: Result is less than the RL but greater than or e

U: Indicates the analyte was analyzed for but not

GC/MS VOA

U: Indicates the analyte was analyzed for but not

General Chemistry

U: Indicates the analyte was analyzed for but not

Metals

J: Result is less than the RL but greater than or e

U: Indicates the analyte was analyzed for but not

SUMMARY OF ANALYTICAL RESULTS

TestAmerica Edison - 460-6723-1

Sample ID	NVF-SW-03		NVF-SW-04		NVF-SW-05		NVF-SW-06	
Lab Sample Number	460-6723-1		460-6723-2		460-6723-3		460-6723-4	
Sampling Date	10/12/2009 1:00:00 PM		10/12/2009 1:15:00 PM		10/12/2009 11:53:00 AM		10/12/2009 11:17:00 AM	
Matrix	Water		Water		Water		Water	
Dilution Factor	1		1		1		1	
Units	ug/L		ug/L		ug/L		ug/L	
	Low		Low		Low		Low	
GC/MS VOA - 8260B								
Dichlorodifluoromethane	1.0	U	1.0	U	1.0	U	1.0	U
Chloromethane	1.0	U	1.0	U	1.0	U	1.0	U
Vinyl chloride	1.0	U	1.0	U	1.0	U	1.0	U
Bromomethane	1.0	U	1.0	U	1.0	U	1.0	U
Chloroethane	1.0	U	1.0	U	1.0	U	1.0	U
Trichlorofluoromethane	1.0	U	1.0	U	1.0	U	1.0	U
1,1-Dichloroethene	1.0	U	1.0	U	1.0	U	1.0	U
1,1,2-Trichloro-1,2,2-trifluoroethane	1.0	U	1.0	U	1.0	U	1.0	U
Acetone	10	U	10	U	10	U	10	U
Carbon disulfide	1.0	U	1.0	U	1.0	U	1.0	U
Methyl acetate	2.0	U	2.0	U	2.0	U	2.0	U
Methylene Chloride	1.0	U	1.0	U	1.0	U	1.0	U
trans-1,2-Dichloroethene	1.0	U	1.0	U	1.0	U	1.0	U
Methyl tert-butyl ether	1.0	U	1.0	U	1.0	U	1.0	U
1,1-Dichloroethane	1.0	U	1.0	U	1.0	U	1.0	U
cis-1,2-Dichloroethene	1.0	U	1.0	U	1.0	U	1.0	U
2-Butanone (MEK)	10	U	10	U	10	U	10	U
Chloroform	1.0	U	1.0	U	1.0	U	1.0	U
1,1,1-Trichloroethane	1.0	U	1.0	U	1.0	U	1.0	U
Cyclohexane	1.0	U	1.0	U	1.0	U	1.0	U
Carbon tetrachloride	1.0	U	1.0	U	1.0	U	1.0	U
Benzene	1.0	U	1.0	U	1.0	U	1.0	U
1,2-Dichloroethane	1.0	U	1.0	U	1.0	U	1.0	U
Trichloroethene	1.0	U	1.0	U	1.0	U	1.0	U
Methylcyclohexane	1.0	U	1.0	U	1.0	U	1.0	U
1,2-Dichloropropane	1.0	U	1.0	U	1.0	U	1.0	U
Dichlorobromomethane	1.0	U	1.0	U	1.0	U	1.0	U

cis-1,3-Dichloropropene	1.0	U	1.0	U	1.0	U	1.0	U
4-Methyl-2-pentanone (MIBK)	10	U	10	U	10	U	10	U
Toluene	1.0	U	1.0	U	1.0	U	1.0	U
trans-1,3-Dichloropropene	1.0	U	1.0	U	1.0	U	1.0	U
1,1,2-Trichloroethane	1.0	U	1.0	U	1.0	U	1.0	U
Tetrachloroethene	1.0	U	1.0	U	1.0	U	1.0	U
2-Hexanone	10	U	10	U	10	U	10	U
Chlorodibromomethane	1.0	U	1.0	U	1.0	U	1.0	U
1,2-Dibromoethane	1.0	U	1.0	U	1.0	U	1.0	U
Chlorobenzene	1.0	U	1.0	U	1.0	U	1.0	U
Ethylbenzene	1.0	U	1.0	U	1.0	U	1.0	U
Xylenes, Total	3.0	U	3.0	U	3.0	U	3.0	U
Styrene	1.0	U	1.0	U	1.0	U	1.0	U
Bromoform	1.0	U	1.0	U	1.0	U	1.0	U
Isopropylbenzene	1.0	U	1.0	U	1.0	U	1.0	U
1,1,2,2-Tetrachloroethane	1.0	U	1.0	U	1.0	U	1.0	U
1,3-Dichlorobenzene	1.0	U	1.0	U	1.0	U	1.0	U
1,4-Dichlorobenzene	1.0	U	1.0	U	1.0	U	1.0	U
1,2-Dichlorobenzene	1.0	U	1.0	U	1.0	U	1.0	U
1,2-Dibromo-3-Chloropropane	1.0	U	1.0	U	1.0	U	1.0	U
1,2,4-Trichlorobenzene	1.0	U	1.0	U	1.0	U	1.0	U
	0		0		0		0	
Total Estimated Conc. (TICs)								

TestAmerica

SUMMARY OF ANALYTICAL RESULTS

TestAmerica Edison - 460-6723-1

Sample ID	**NVF-SW-03**		**NVF-SW-04**		**NVF-SW-05**		**NVF-SW-06**	
Lab Sample Number	**460-6723-1**		**460-6723-2**		**460-6723-3**		**460-6723-4**	
Sampling Date	**10/12/2009 1:00:00 PM**		**10/12/2009 1:15:00 PM**		**10/12/2009 11:53:00 AM**		**10/12/2009 11:17:00 AM**	
Matrix	**Water**		**Water**		**Water**		**Water**	
Dilution Factor	**1**		**1**		**1**		**1**	
Units	**ug/L**		**ug/L**		**ug/L**		**ug/L**	
	Low		**Low**		**Low**		**Low**	
GC/MS Semi VOA - 8270C								
Benzaldehyde	11	U *	10	U *	10	U *	10	U *
Phenol	11	U *	10	U *	10	U *	10	U *
Bis(2-chloroethyl)ether	1.1	U	1.0	U	1.0	U	1.0	U
2-Chlorophenol	11	U	10	U	10	U	10	U
2-Methylphenol	11	U	10	U	10	U	10	U
2,2'-oxybis[1-chloropropane]	11	U	10	U	10	U	10	U
Acetophenone	11	U	10	U	10	U	10	U
4-Methylphenol	11	U	10	U	10	U	10	U
N-Nitrosodi-n-propylamine	1.1	U *	1.0	U *	1.0	U *	1.0	U *
Hexachloroethane	1.1	U	1.0	U	1.0	U	1.0	U
Nitrobenzene	1.1	U	1.0	U	1.0	U	1.0	U
Isophorone	11	U	10	U	10	U	10	U
2-Nitrophenol	11	U	10	U	10	U	10	U
2,4-Dimethylphenol	11	U	10	U	10	U	10	U
Bis(2-chloroethoxy)methane	11	U	10	U	10	U	10	U
2,4-Dichlorophenol	11	U	10	U	10	U	10	U
Naphthalene	11	U	10	U	10	U	10	U
4-Chloroaniline	11	U	10	U	10	U	10	U
Hexachlorobutadiene	2.2	U	2.0	U	2.1	U	2.1	U
Caprolactam	11	U	10	U	10	U	10	U
4-Chloro-3-methylphenol	11	U	10	U	10	U	10	U
2-Methylnaphthalene	11	U	10	U	10	U	10	U
Hexachlorocyclopentadiene	11	U	10	U	10	U	10	U
2,4,6-Trichlorophenol	11	U	10	U	10	U	10	U

2,4,5-Trichlorophenol	11	U	10	U	10	U	10	U
1,1'-Biphenyl	11	U	10	U	10	U	10	U
2-Chloronaphthalene	11	U	10	U	10	U	10	U
2-Nitroaniline	22	U	20	U	21	U	21	U
Dimethyl phthalate	11	U	10	U	10	U	10	U
2,6-Dinitrotoluene	2.2	U	2.0	U	2.1	U	2.1	U
Acenaphthylene	11	U	10	U	10	U	10	U
3-Nitroaniline	22	U	20	U	21	U	21	U
Acenaphthene	11	U	10	U	10	U	10	U
2,4-Dinitrophenol	34	U *	30	U *	31	U *	31	U *
4-Nitrophenol	34	U	30	U	31	U	31	U
Dibenzofuran	11	U	10	U	10	U	10	U
2,4-Dinitrotoluene	2.2	U	2.0	U	2.1	U	2.1	U
Diethyl phthalate	11	U	10	U	10	U	10	U
Fluorene	11	U	10	U	10	U	10	U
4-Chlorophenyl phenyl ether	11	U	10	U	10	U	10	U
4-Nitroaniline	22	U	20	U	21	U	21	U
4,6-Dinitro-2-methylphenol	34	U	30	U	31	U	31	U
N-Nitrosodiphenylamine	11	U	10	U	10	U	10	U
4-Bromophenyl phenyl ether	11	U	10	U	10	U	10	U
Hexachlorobenzene	1.1	U	1.0	U	1.0	U	1.0	U
Atrazine	11	U	10	U	10	U	10	U
Pentachlorophenol	34	U *	30	U *	31	U *	31	U *
Phenanthrene	11	U	10	U	10	U	10	U
Anthracene	11	U	10	U	10	U	10	U
Carbazole	11	U	10	U	10	U	10	U
Di-n-butyl phthalate	11	U	10	U	10	U	10	U
Fluoranthene	11	U	10	U	10	U	10	U
Pyrene	11	U	10	U	10	U	10	U
Butyl benzyl phthalate	11	U	10	U	10	U	10	U
3,3'-Dichlorobenzidine	22	U	20	U	21	U	21	U
Benzo[a]anthracene	1.1	U	1.0	U	1.0	U	1.0	U
Chrysene	11	U	10	U	10	U	10	U
Bis(2-ethylhexyl) phthalate	11	U	10	U	10	U	10	U
Di-n-octyl phthalate	11	U	10	U	10	U	10	U
Benzo[b]fluoranthene	1.1	U	1.0	U	1.0	U	1.0	U
Benzo[k]fluoranthene	1.1	U	1.0	U	1.0	U	1.0	U
Benzo[a]pyrene	1.1	U	1.0	U	1.0	U	1.0	U

Indeno[1,2,3-cd]pyrene	1.1	U	1.0	U	1.0	U	1.0	U
Dibenz(a,h)anthracene	1.1	U	1.0	U	1.0	U	1.0	U
Benzo[g,h,i]perylene	11	U	10	U	10	U	10	U
	0		0		0		0	
Total Estimated Conc. (TICs)								

TestAmerica

SUMMARY OF ANALYTICAL RESULTS

TestAmerica Edison - 460-6723-1

Sample ID	**NVF-SW-03**		**NVF-SW-04**		**NVF-SW-05**		**NVF-SW-06**	
Lab Sample Number	**460-6723-1**		**460-6723-2**		**460-6723-3**		**460-6723-4**	
Sampling Date	**10/12/2009 1:00:00 PM**		**10/12/2009 1:15:00 PM**		**10/12/2009 11:53:00 AM**		**10/12/2009 11:17:00 AM**	
Matrix	**Water**		**Water**		**Water**		**Water**	
Dilution Factor	**1**		**1**		**1**		**1**	
Units	**ug/L**		**ug/L**		**ug/L**		**ug/L**	
	Low		**Low**		**Low**		**Low**	
GC Semi VOA - 8081A								
alpha-BHC	0.056	U	0.051	U	0.053	U	0.051	U
beta-BHC	0.056	U	0.051	U	0.053	U	0.051	U
delta-BHC	0.056	U	0.051	U	0.053	U	0.051	U
gamma-BHC (Lindane)	0.056	U	0.051	U	0.053	U	0.051	U
Heptachlor	0.056	U	0.051	U	0.053	U	0.051	U
Aldrin	0.056	U	0.051	U	0.053	U	0.051	U
Heptachlor epoxide	0.056	U	0.051	U	0.053	U	0.051	U
Endosulfan I	0.056	U	0.051	U	0.053	U	0.051	U
Dieldrin	0.056	U	0.051	U	0.053	U	0.051	U
4,4'-DDE	0.056	U	0.051	U	0.053	U	0.051	U
Endrin	0.056	U	0.051	U	0.053	U	0.051	U
Endosulfan II	0.056	U	0.051	U	0.053	U	0.051	U
4,4'-DDD	0.056	U	0.051	U	0.053	U	0.051	U
Endosulfan sulfate	0.056	U	0.051	U	0.053	U	0.051	U
4,4'-DDT	0.056	U	0.051	U	0.053	U	0.051	U
Methoxychlor	0.056	U	0.051	U	0.053	U	0.051	U
Endrin ketone	0.056	U	0.051	U	0.053	U	0.051	U
Endrin aldehyde	0.056	U	0.051	U	0.053	U	0.051	U
alpha-Chlordane	0.056	U	0.051	U	0.053	U	0.051	U
gamma-Chlordane	0.056	U	0.051	U	0.053	U	0.051	U
Toxaphene	0.56	U	0.51	U	0.53	U	0.51	U

SUMMARY OF ANALYTICAL RESULTS

TestAmerica Edison - 460-6723-1

Sample ID	NVF-SW-03		NVF-SW-04		NVF-SW-05		NVF-SW-06	
Lab Sample Number	460-6723-1		460-6723-2		460-6723-3		460-6723-4	
Sampling Date	10/12/2009 1:00:00 PM		10/12/2009 1:15:00 PM		10/12/2009 11:53:00 AM		10/12/2009 11:17:00 AM	
Matrix	Water		Water		Water		Water	
Dilution Factor	1		1		1		1	
Units	ug/L		ug/L		ug/L		ug/L	
	Low		Low		Low		Low	
GC Semi VOA - 8082								
PCB-1016	0.56	U	0.51	U	0.53	U	0.51	U
PCB-1221	0.56	U	0.51	U	0.53	U	0.51	U
PCB-1232	0.56	U	0.51	U	0.53	U	0.51	U
PCB-1242	0.56	U	0.51	U	0.53	U	0.51	U
PCB-1248	0.56	U	0.51	U	0.53	U	0.51	U
PCB-1254	0.56	U	0.51	U	0.53	U	0.51	U
PCB-1260	0.56	U	0.51	U	0.53	U	0.51	U

SUMMARY OF ANALYTICAL RESULTS

TestAmerica Edison - 460-6723-1

Sample ID	NVF-SW-03		NVF-SW-04		NVF-SW-05		NVF-SW-06	
Lab Sample Number	460-6723-1		460-6723-2		460-6723-3		460-6723-4	
Sampling Date	10/12/2009 1:00:00 PM		10/12/2009 1:15:00 PM		10/12/2009 11:53:00 AM		10/12/2009 11:17:00 AM	
Matrix	Water		Water		Water		Water	
Dilution Factor	1		1		1		1	
Units								
	Low		Low		Low		Low	
General Chemistry								
Hardness as calcium carbonate - mg/L	168		152		164		158	
Cyanide, Total - mg/L	0.010	U	0.010	U	0.010	U	0.010	U

TestAmerica

SUMMARY OF ANALYTICAL RESULTS

TestAmerica Edison - 460-6723-1

Sample ID	**NVF-SW-03**		**NVF-SW-04**		**NVF-SW-05**		**NVF-SW-06**	
Lab Sample Number	**460-6723-1**		**460-6723-2**		**460-6723-3**		**460-6723-4**	
Sampling Date	**10/12/2009 1:00:00 PM**		**10/12/2009 1:15:00 PM**		**10/12/2009 11:53:00 AM**		**10/12/2009 11:17:00 AM**	
Matrix	**Water**		**Water**		**Water**		**Water**	
Dilution Factor	**1**		**1**		**1**		**1**	
Units	**ug/L**		**ug/L**		**ug/L**		**ug/L**	
	Low		**Low**		**Low**		**Low**	
Metals								
Aluminum	95.8	J	94.5	J	95.7	J	200	U
Antimony	10.0	U	10.0	U	10.0	U	10.0	U
Arsenic	5.0	U	5.0	U	5.0	U	5.0	U
Barium	68.6	J	76.9	J	69.5	J	68.3	J
Beryllium	2.0	U	2.0	U	2.0	U	2.0	U
Cadmium	5.0	U	5.0	U	5.0	U	5.0	U
Calcium	38800		34700		38300		36300	
Chromium	10.0	U	10.0	U	10.0	U	10.0	U
Cobalt	50.0	U	50.0	U	50.0	U	50.0	U
Copper	25.0	U	25.0	U	25.0	U	25.0	U
Iron	102	J	101	J	148	J	75.9	J
Lead	5.0	U	5.0	U	5.0	U	5.0	U
Magnesium	15000		13500		15000		14200	
Manganese	18.6		50.8		44.1		15.7	
Nickel	40.0	U	40.0	U	40.0	U	40.0	U
Potassium	4540	J	3330	J	4440	J	4090	J
Selenium	10.0	U	10.0	U	10.0	U	10.0	U
Silver	10.0	U	10.0	U	10.0	U	10.0	U
Sodium	17000		15000		16500		15500	
Thallium	10.0	U	10.0	U	10.0	U	10.0	U
Vanadium	50.0	U	50.0	U	50.0	U	50.0	U
Zinc	7.7	J	188		69.4		60.3	
Mercury	0.20	U	0.20	U	0.20	U	0.20	U

SUMMARY OF ANALYTICAL RESULTS

TestAmerica Edison - 460-6723-1

QUALIFIERS

GC Semi VOA

U: Indicates the analyte was analyzed for but not detected.

GC/MS Semi VOA

*: Recovery or RPD exceeds control limits

J: Result is less than the RL but greater than or equal to the MDL and the concentration is an approximate value.

U: Indicates the analyte was analyzed for but not detected.

GC/MS VOA

U: Indicates the analyte was analyzed for but not detected.

General Chemistry

U: Indicates the analyte was analyzed for but not detected.

Metals

4: MS, MSD: The analyte present in the original sample is 4 times greater than the matrix spike concentration; therefore, control limits are not applicable.

J: Result is less than the RL but greater than or equal to the MDL and the concentration is an approximate value.

U: Indicates the analyte was analyzed for but not detected.

SUMMARY OF ANALYTICAL RESULTS

TestAmerica Edison - 460-6723-1

Sample ID	NVF-SW-08		NVF-SW-09		NVF-SW-909		NVF-GW-UNKNOWN	
Lab Sample Number	460-6723-6		460-6723-7		460-6723-8		460-6723-9	
Sampling Date	10/12/2009 2:20:00 PM		10/12/2009 1:40:00 PM		10/12/2009 1:43:00 PM		10/12/2009 3:26:00 PM	
Matrix	Water		Water		Water		Water	
Dilution Factor	1		1		1		1	
Units	ug/L		ug/L		ug/L		ug/L	
	Low		Low		Low		Low	
GC/MS VOA - 8260B								
Dichlorodifluoromethane	1.0	U	1.0	U	1.0	U	1.0	U
Chloromethane	1.0	U	1.0	U	1.0	U	1.0	U
Vinyl chloride	1.0	U	1.0	U	1.0	U	1.0	U
Bromomethane	1.0	U	1.0	U	1.0	U	1.0	U
Chloroethane	1.0	U	1.0	U	1.0	U	1.0	U
Trichlorofluoromethane	1.0	U	1.0	U	1.0	U	1.0	U
1,1-Dichloroethene	1.0	U	1.0	U	1.0	U	1.0	U
1,1,2-Trichloro-1,2,2-trifluoroethane	1.0	U	1.0	U	1.0	U	1.0	U
Acetone	10	U	10	U	10	U	10	U
Carbon disulfide	1.0	U	1.0	U	1.0	U	1.0	U
Methyl acetate	2.0	U	2.0	U	2.0	U	2.0	U
Methylene Chloride	1.0	U	1.0	U	1.0	U	1.0	U
trans-1,2-Dichloroethene	1.0	U	1.0	U	1.0	U	1.0	U
Methyl tert-butyl ether	1.0	U	1.0	U	1.0	U	1.0	U
1,1-Dichloroethane	1.0	U	1.0	U	1.0	U	1.0	U
cis-1,2-Dichloroethene	1.0	U	1.0	U	1.0	U	1.0	U
2-Butanone (MEK)	10	U	10	U	10	U	10	U
Chloroform	1.0	U	1.0	U	1.0	U	1.0	U
1,1,1-Trichloroethane	1.0	U	1.0	U	1.0	U	1.0	U
Cyclohexane	1.0	U	1.0	U	1.0	U	1.0	U
Carbon tetrachloride	1.0	U	1.0	U	1.0	U	1.0	U
Benzene	1.0	U	1.0	U	1.0	U	1.0	U
1,2-Dichloroethane	1.0	U	1.0	U	1.0	U	1.0	U
Trichloroethene	1.0	U	1.0	U	1.0	U	1.0	U
Methylcyclohexane	1.0	U	1.0	U	1.0	U	1.0	U
1,2-Dichloropropane	1.0	U	1.0	U	1.0	U	1.0	U
Dichlorobromomethane	1.0	U	1.0	U	1.0	U	1.0	U

cis-1,3-Dichloropropene	1.0	U	1.0	U	1.0	U	1.0	U
4-Methyl-2-pentanone (MIBK)	10	U	10	U	10	U	10	U
Toluene	1.0	U	1.0	U	1.0	U	1.0	U
trans-1,3-Dichloropropene	1.0	U	1.0	U	1.0	U	1.0	U
1,1,2-Trichloroethane	1.0	U	1.0	U	1.0	U	1.0	U
Tetrachloroethene	1.0	U	1.0	U	1.0	U	1.0	U
2-Hexanone	10	U	10	U	10	U	10	U
Chlorodibromomethane	1.0	U	1.0	U	1.0	U	1.0	U
1,2-Dibromoethane	1.0	U	1.0	U	1.0	U	1.0	U
Chlorobenzene	1.0	U	1.0	U	1.0	U	1.0	U
Ethylbenzene	1.0	U	1.0	U	1.0	U	1.0	U
Xylenes, Total	3.0	U	3.0	U	3.0	U	3.0	U
Styrene	1.0	U	1.0	U	1.0	U	1.0	U
Bromoform	1.0	U	1.0	U	1.0	U	1.0	U
Isopropylbenzene	1.0	U	1.0	U	1.0	U	1.0	U
1,1,2,2-Tetrachloroethane	1.0	U	1.0	U	1.0	U	1.0	U
1,3-Dichlorobenzene	1.0	U	1.0	U	1.0	U	1.0	U
1,4-Dichlorobenzene	1.0	U	1.0	U	1.0	U	1.0	U
1,2-Dichlorobenzene	1.0	U	1.0	U	1.0	U	1.0	U
1,2-Dibromo-3-Chloropropane	1.0	U	1.0	U	1.0	U	1.0	U
1,2,4-Trichlorobenzene	1.0	U	1.0	U	1.0	U	1.0	U
	0		0		0		0	
Total Estimated Conc. (TICs)								

TestAmerica

SUMMARY OF ANALYTICAL RESULTS

TestAmerica Edison - 460-6723-1

Sample ID	**NVF-SW-07**		**NVF-SW-08**		**NVF-SW-09**		**NVF-SW-909**	
Lab Sample Number	**460-6723-5**		**460-6723-6**		**460-6723-7**		**460-6723-8**	
Sampling Date	**10/12/2009 2:25:00 PM**		**10/12/2009 2:20:00 PM**		**10/12/2009 1:40:00 PM**		**10/12/2009 1:43:00 PM**	
Matrix	**Water**		**Water**		**Water**		**Water**	
Dilution Factor	**1**		**1**		**1**		**1**	
Units	**ug/L**		**ug/L**		**ug/L**		**ug/L**	
	Low		**Low**		**Low**		**Low**	
GC/MS Semi VOA - 8270C								
Benzaldehyde	10	U *	10	U *	11	U *	10	U *
Phenol	10	U *	10	U *	11	U *	10	U *
Bis(2-chloroethyl)ether	1.0	U	1.0	U	1.1	U	1.0	U
2-Chlorophenol	10	U	10	U	11	U	10	U
2-Methylphenol	10	U	10	U	11	U	10	U
2,2'-oxybis[1-chloropropane]	10	U	10	U	11	U	10	U
Acetophenone	10	U	10	U	11	U	10	U
4-Methylphenol	10	U	10	U	11	U	10	U
N-Nitrosodi-n-propylamine	1.0	U *	1.0	U *	1.1	U *	1.0	U *
Hexachloroethane	1.0	U	1.0	U	1.1	U	1.0	U
Nitrobenzene	1.0	U	1.0	U	1.1	U	1.0	U
Isophorone	10	U	10	U	11	U	10	U
2-Nitrophenol	10	U	10	U	11	U	10	U
2,4-Dimethylphenol	10	U	10	U	11	U	10	U
Bis(2-chloroethoxy)methane	10	U	10	U	11	U	10	U
2,4-Dichlorophenol	10	U	10	U	11	U	10	U
Naphthalene	10	U	10	U	11	U	10	U
4-Chloroaniline	10	U	10	U	11	U	10	U
Hexachlorobutadiene	2.1	U	2.0	U	2.1	U	2.1	U
Caprolactam	10	U	10	U	11	U	10	U
4-Chloro-3-methylphenol	10	U	10	U	11	U	10	U
2-Methylnaphthalene	10	U	10	U	11	U	10	U
Hexachlorocyclopentadiene	10	U	10	U	11	U	10	U
2,4,6-Trichlorophenol	10	U	10	U	11	U	10	U

2,4,5-Trichlorophenol	10	U	10	U	11	U	10	U
1,1'-Biphenyl	10	U	10	U	11	U	10	U
2-Chloronaphthalene	10	U	10	U	11	U	10	U
2-Nitroaniline	21	U	20	U	21	U	21	U
Dimethyl phthalate	10	U	10	U	11	U	10	U
2,6-Dinitrotoluene	2.1	U	2.0	U	2.1	U	2.1	U
Acenaphthylene	10	U	10	U	11	U	10	U
3-Nitroaniline	21	U	20	U	21	U	21	U
Acenaphthene	10	U	10	U	11	U	10	U
2,4-Dinitrophenol	31	U *	31	U *	32	U *	31	U *
4-Nitrophenol	31	U	31	U	32	U	31	U
Dibenzofuran	10	U	10	U	11	U	10	U
2,4-Dinitrotoluene	2.1	U	2.0	U	2.1	U	2.1	U
Diethyl phthalate	10	U	10	U	11	U	10	U
Fluorene	10	U	10	U	11	U	10	U
4-Chlorophenyl phenyl ether	10	U	10	U	11	U	10	U
4-Nitroaniline	21	U	20	U	21	U	21	U
4,6-Dinitro-2-methylphenol	31	U	31	U	32	U	31	U
N-Nitrosodiphenylamine	10	U	10	U	11	U	10	U
4-Bromophenyl phenyl ether	10	U	10	U	11	U	10	U
Hexachlorobenzene	1.0	U	1.0	U	1.1	U	1.0	U
Atrazine	10	U	10	U	11	U	10	U
Pentachlorophenol	31	U *	31	U *	32	U *	31	U *
Phenanthrene	10	U	10	U	11	U	10	U
Anthracene	10	U	10	U	11	U	10	U
Carbazole	10	U	10	U	11	U	10	U
Di-n-butyl phthalate	10	U	10	U	11	U	10	U
Fluoranthene	10	U	10	U	11	U	10	U
Pyrene	10	U	10	U	11	U	10	U
Butyl benzyl phthalate	10	U	10	U	11	U	10	U
3,3'-Dichlorobenzidine	21	U	20	U	21	U	21	U
Benzo[a]anthracene	1.0	U	1.0	U	1.1	U	1.0	U
Chrysene	10	U	10	U	11	U	10	U
Bis(2-ethylhexyl) phthalate	10	U	10	U	11	U	10	U
Di-n-octyl phthalate	10	U	10	U	11	U	10	U
Benzo[b]fluoranthene	1.0	U	1.0	U	1.1	U	1.0	U
Benzo[k]fluoranthene	1.0	U	1.0	U	1.1	U	1.0	U
Benzo[a]pyrene	1.0	U	1.0	U	1.1	U	1.0	U

Indeno[1,2,3-cd]pyrene	1.0	U	1.0	U	1.1	U	1.0	U
Dibenz(a,h)anthracene	1.0	U	1.0	U	1.1	U	1.0	U
Benzo[g,h,i]perylene	10	U	10	U	11	U	10	U
	0		0		0		0	
Total Estimated Conc. (TICs)								

TestAmerica

SUMMARY OF ANALYTICAL RESULTS

TestAmerica Edison - 460-6723-1

Sample ID	NVF-SW-07		NVF-SW-08		NVF-SW-09		NVF-SW-909	
Lab Sample Number	460-6723-5		460-6723-6		460-6723-7		460-6723-8	
Sampling Date	10/12/2009 2:25:00 PM		10/12/2009 2:20:00 PM		10/12/2009 1:40:00 PM		10/12/2009 1:43:00 PM	
Matrix	Water		Water		Water		Water	
Dilution Factor	1		1		1		1	
Units	ug/L		ug/L		ug/L		ug/L	
	Low		Low		Low		Low	
GC Semi VOA - 8081A								
alpha-BHC	0.051	U	0.051	U	0.051	U	0.053	U
beta-BHC	0.051	U	0.051	U	0.051	U	0.053	U
delta-BHC	0.051	U	0.051	U	0.051	U	0.053	U
gamma-BHC (Lindane)	0.051	U	0.051	U	0.051	U	0.053	U
Heptachlor	0.051	U	0.051	U	0.051	U	0.053	U
Aldrin	0.051	U	0.051	U	0.051	U	0.053	U
Heptachlor epoxide	0.051	U	0.051	U	0.051	U	0.053	U
Endosulfan I	0.051	U	0.051	U	0.051	U	0.053	U
Dieldrin	0.051	U	0.051	U	0.051	U	0.053	U
4,4'-DDE	0.051	U	0.051	U	0.051	U	0.053	U
Endrin	0.051	U	0.051	U	0.051	U	0.053	U
Endosulfan II	0.051	U	0.051	U	0.051	U	0.053	U
4,4'-DDD	0.051	U	0.051	U	0.051	U	0.053	U
Endosulfan sulfate	0.051	U	0.051	U	0.051	U	0.053	U
4,4'-DDT	0.051	U	0.051	U	0.051	U	0.053	U
Methoxychlor	0.051	U	0.051	U	0.051	U	0.053	U
Endrin ketone	0.051	U	0.051	U	0.051	U	0.053	U
Endrin aldehyde	0.051	U	0.051	U	0.051	U	0.053	U
alpha-Chlordane	0.051	U	0.051	U	0.051	U	0.053	U
gamma-Chlordane	0.051	U	0.051	U	0.051	U	0.053	U
Toxaphene	0.51	U	0.51	U	0.51	U	0.53	U

SUMMARY OF ANALYTICAL RESULTS

TestAmerica Edison - 460-6723-1

Sample ID	NVF-SW-07		NVF-SW-08		NVF-SW-09		NVF-SW-909	
Lab Sample Number	460-6723-5		460-6723-6		460-6723-7		460-6723-8	
Sampling Date	10/12/2009 2:25:00 PM		10/12/2009 2:20:00 PM		10/12/2009 1:40:00 PM		10/12/2009 1:43:00 PM	
Matrix	Water		Water		Water		Water	
Dilution Factor	1		1		1		1	
Units	ug/L		ug/L		ug/L		ug/L	
	Low		Low		Low		Low	
GC Semi VOA - 8082								
PCB-1016	0.51	U	0.51	U	0.51	U	0.53	U
PCB-1221	0.51	U	0.51	U	0.51	U	0.53	U
PCB-1232	0.51	U	0.51	U	0.51	U	0.53	U
PCB-1242	0.51	U	0.51	U	0.51	U	0.53	U
PCB-1248	0.51	U	0.51	U	0.51	U	0.53	U
PCB-1254	0.51	U	0.51	U	0.51	U	0.53	U
PCB-1260	0.51	U	0.51	U	0.51	U	0.53	U

SUMMARY OF ANALYTICAL RESULTS

TestAmerica Edison - 460-6723-1

Sample ID	NVF-SW-08		NVF-SW-09		NVF-SW-909		NVF-GW-UNKNOWN	
Lab Sample Number	460-6723-6		460-6723-7		460-6723-8		460-6723-9	
Sampling Date	10/12/2009 2:20:00 PM		10/12/2009 1:40:00 PM		10/12/2009 1:43:00 PM		10/12/2009 3:26:00 PM	
Matrix	Water		Water		Water		Water	
Dilution Factor	1		1		1		1	
Units								
	Low		Low		Low		Low	
General Chemistry								
Hardness as calcium carbonate - mg/L	129		125		129		2630	
Cyanide, Total - mg/L	0.010	U	0.010	U	0.010	U	0.010	U

TestAmerica

SUMMARY OF ANALYTICAL RESULTS

TestAmerica Edison - 460-6723-1

Sample ID	**NVF-SW-07**		**NVF-SW-08**		**NVF-SW-09**		**NVF-SW-909**	
Lab Sample Number	**460-6723-5**		**460-6723-6**		**460-6723-7**		**460-6723-8**	
Sampling Date	**10/12/2009 2:25:00 PM**		**10/12/2009 2:20:00 PM**		**10/12/2009 1:40:00 PM**		**10/12/2009 1:43:00 PM**	
Matrix	**Water**		**Water**		**Water**		**Water**	
Dilution Factor	**1**		**1**		**1**		**1**	
Units	**ug/L**		**ug/L**		**ug/L**		**ug/L**	
	Low		**Low**		**Low**		**Low**	
Metals								
Aluminum	107	J	200	U	200	U	200	U
Antimony	10.0	U	10.0	U	10.0	U	10.0	U
Arsenic	5.0	U	5.0	U	5.0	U	5.0	U
Barium	73.9	J	91.8	J	92.6	J	92.1	J
Beryllium	2.0	U	2.0	U	2.0	U	2.0	U
Cadmium	5.0	U	5.0	U	5.0	U	5.0	U
Calcium	37300		30100		29400		29300	
Chromium	10.0	U	10.0	U	10.0	U	10.0	U
Cobalt	50.0	U	50.0	U	50.0	U	50.0	U
Copper	25.0	U	25.0	U	25.0	U	25.0	U
Iron	123	J	126	J	119	J	139	J
Lead	5.0	U	5.0	U	5.0	U	5.0	U
Magnesium	14400		12200		11800		11700	
Manganese	54.6		60.5		58.1		58.8	
Nickel	40.0	U	40.0	U	40.0	U	40.0	U
Potassium	4220	J	2380	J	2360	J	2420	J
Selenium	10.0	U	10.0	U	10.0	U	10.0	U
Silver	10.0	U	10.0	U	10.0	U	10.0	U
Sodium	16400		14300		14200		14300	
Thallium	10.0	U	10.0	U	10.0	U	10.0	U
Vanadium	50.0	U	50.0	U	50.0	U	50.0	U
Zinc	53.6		30.0	U	30.0	U	7.0	J
Mercury	0.20	U	0.20	U	0.20	U	0.20	U

SUMMARY OF ANALYTICAL RESULTS

TestAmerica Edison - 460-6723-1

QUALIFIERS

GC Semi VOA

U: Indicates the analyte was analyzed for but not

GC/MS Semi VOA

*: Recovery or RPD exceeds control limits

J: Result is less than the RL but greater than or e

U: Indicates the analyte was analyzed for but not

GC/MS VOA

U: Indicates the analyte was analyzed for but not

General Chemistry

U: Indicates the analyte was analyzed for but not

Metals

4: MS, MSD: The analyte present in the original s

J: Result is less than the RL but greater than or e

U: Indicates the analyte was analyzed for but not

SUMMARY OF ANALYTICAL RESULTS

TestAmerica Edison - 460-6723-1

Sample ID	TB	
Lab Sample Number	460-6723-10	
Sampling Date	10/12/2009 12:00:00 AM	
Matrix	Water	
Dilution Factor	1	
Units	ug/L	
	Low	
GC/MS VOA - 8260B		
Dichlorodifluoromethane	1.0	U
Chloromethane	1.0	U
Vinyl chloride	1.0	U
Bromomethane	1.0	U
Chloroethane	1.0	U
Trichlorofluoromethane	1.0	U
1,1-Dichloroethene	1.0	U
1,1,2-Trichloro-1,2,2-trifluoroethane	1.0	U
Acetone	10	U
Carbon disulfide	1.0	U
Methyl acetate	2.0	U
Methylene Chloride	1.0	U
trans-1,2-Dichloroethene	1.0	U
Methyl tert-butyl ether	1.0	U
1,1-Dichloroethane	1.0	U
cis-1,2-Dichloroethene	1.0	U
2-Butanone (MEK)	10	U
Chloroform	1.0	U
1,1,1-Trichloroethane	1.0	U
Cyclohexane	1.0	U
Carbon tetrachloride	1.0	U
Benzene	1.0	U
1,2-Dichloroethane	1.0	U
Trichloroethene	1.0	U
Methylcyclohexane	1.0	U
1,2-Dichloropropane	1.0	U
Dichlorobromomethane	1.0	U

cis-1,3-Dichloropropene	1.0	U
4-Methyl-2-pentanone (MIBK)	10	U
Toluene	1.0	U
trans-1,3-Dichloropropene	1.0	U
1,1,2-Trichloroethane	1.0	U
Tetrachloroethene	1.0	U
2-Hexanone	10	U
Chlorodibromomethane	1.0	U
1,2-Dibromoethane	1.0	U
Chlorobenzene	1.0	U
Ethylbenzene	1.0	U
Xylenes, Total	3.0	U
Styrene	1.0	U
Bromoform	1.0	U
Isopropylbenzene	1.0	U
1,1,2,2-Tetrachloroethane	1.0	U
1,3-Dichlorobenzene	1.0	U
1,4-Dichlorobenzene	1.0	U
1,2-Dichlorobenzene	1.0	U
1,2-Dibromo-3-Chloropropane	1.0	U
1,2,4-Trichlorobenzene	1.0	U
	0	
Total Estimated Conc. (TICs)		

TestAmerica

SUMMARY OF ANALYTICAL RESULTS

TestAmerica Edison - 460-6723-1

Sample ID	**NVF-GW-UNKNOWN**	
Lab Sample Number	**460-6723-9**	
Sampling Date	**10/12/2009 3:26:00 PM**	
Matrix	**Water**	
Dilution Factor	**1**	
Units	**ug/L**	
	Low	
GC/MS Semi VOA - 8270C		
Benzaldehyde	11	U *
Phenol	11	U *
Bis(2-chloroethyl)ether	1.1	U
2-Chlorophenol	11	U
2-Methylphenol	11	U
2,2'-oxybis[1-chloropropane]	11	U
Acetophenone	11	U
4-Methylphenol	11	U
N-Nitrosodi-n-propylamine	1.1	U *
Hexachloroethane	1.1	U
Nitrobenzene	1.1	U
Isophorone	11	U
2-Nitrophenol	11	U
2,4-Dimethylphenol	11	U
Bis(2-chloroethoxy)methane	11	U
2,4-Dichlorophenol	11	U
Naphthalene	11	U
4-Chloroaniline	11	U
Hexachlorobutadiene	2.1	U
Caprolactam	3.1	J
4-Chloro-3-methylphenol	11	U
2-Methylnaphthalene	11	U
Hexachlorocyclopentadiene	11	U
2,4,6-Trichlorophenol	11	U

2,4,5-Trichlorophenol	11	U
1,1'-Biphenyl	11	U
2-Chloronaphthalene	11	U
2-Nitroaniline	21	U
Dimethyl phthalate	11	U
2,6-Dinitrotoluene	2.1	U
Acenaphthylene	11	U
3-Nitroaniline	21	U
Acenaphthene	11	U
2,4-Dinitrophenol	32	U *
4-Nitrophenol	32	U
Dibenzofuran	11	U
2,4-Dinitrotoluene	2.1	U
Diethyl phthalate	11	U
Fluorene	11	U
4-Chlorophenyl phenyl ether	11	U
4-Nitroaniline	21	U
4,6-Dinitro-2-methylphenol	32	U
N-Nitrosodiphenylamine	11	U
4-Bromophenyl phenyl ether	11	U
Hexachlorobenzene	1.1	U
Atrazine	11	U
Pentachlorophenol	32	U *
Phenanthrene	11	U
Anthracene	11	U
Carbazole	11	U
Di-n-butyl phthalate	11	U
Fluoranthene	11	U
Pyrene	11	U
Butyl benzyl phthalate	11	U
3,3'-Dichlorobenzidine	21	U
Benzo[a]anthracene	1.1	U
Chrysene	11	U
Bis(2-ethylhexyl) phthalate	11	U
Di-n-octyl phthalate	11	U
Benzo[b]fluoranthene	1.1	U
Benzo[k]fluoranthene	1.1	U
Benzo[a]pyrene	1.1	U

Indeno[1,2,3-cd]pyrene	1.1	U
Dibenz(a,h)anthracene	1.1	U
Benzo[g,h,i]perylene	11	U
	0	
Total Estimated Conc. (TICs)		

SUMMARY OF ANALYTICAL RESULTS

TestAmerica Edison - 460-6723-1

Sample ID	**NVF-GW-UNKNOWN**	
Lab Sample Number	**460-6723-9**	
Sampling Date	**10/12/2009 3:26:00 PM**	
Matrix	**Water**	
Dilution Factor	**1**	
Units	**ug/L**	
	Low	
GC Semi VOA - 8081A		
alpha-BHC	0.056	U
beta-BHC	0.056	U
delta-BHC	0.056	U
gamma-BHC (Lindane)	0.056	U
Heptachlor	0.056	U
Aldrin	0.056	U
Heptachlor epoxide	0.056	U
Endosulfan I	0.056	U
Dieldrin	0.056	U
4,4'-DDE	0.056	U
Endrin	0.056	U
Endosulfan II	0.056	U
4,4'-DDD	0.056	U
Endosulfan sulfate	0.056	U
4,4'-DDT	0.056	U
Methoxychlor	0.056	U
Endrin ketone	0.056	U
Endrin aldehyde	0.056	U
alpha-Chlordane	0.056	U
gamma-Chlordane	0.056	U
Toxaphene	0.56	U

SUMMARY OF ANALYTICAL RESULTS

TestAmerica Edison - 460-6723-1

Sample ID	**NVF-GW-UNKNOWN**	
Lab Sample Number	**460-6723-9**	
Sampling Date	**10/12/2009 3:26:00 PM**	
Matrix	**Water**	
Dilution Factor	**1**	
Units	**ug/L**	
	Low	
GC Semi VOA - 8082		
PCB-1016	0.56	U
PCB-1221	0.56	U
PCB-1232	0.56	U
PCB-1242	0.56	U
PCB-1248	0.56	U
PCB-1254	0.56	U
PCB-1260	0.56	U

SUMMARY OF ANALYTICAL RESULTS

TestAmerica Edison - 460-6723-1

Sample ID
Lab Sample Number
Sampling Date
Matrix
Dilution Factor
Units
General Chemistry
Hardness as calcium carbonate - mg/L
Cyanide, Total - mg/L

SUMMARY OF ANALYTICAL RESULTS

TestAmerica Edison - 460-6723-1

Sample ID	**NVF-GW-UNKNOWN**	
Lab Sample Number	**460-6723-9**	
Sampling Date	**10/12/2009 3:26:00 PM**	
Matrix	**Water**	
Dilution Factor		
Units	**ug/L**	
	Dissolved Low	
Metals		
Aluminum	1000	U
Antimony	50.0	U
Arsenic	25.0	U
Barium	228	J
Beryllium	10.0	U
Cadmium	21.1	J
Calcium	51300	
Chromium	50.0	U
Cobalt	23.5	J
Copper	125	U
Iron	10700	
Lead	25.0	U
Magnesium	44800	
Manganese	7130	
Nickel	286	
Potassium	14400	J
Selenium	50.0	U
Silver	50.0	U
Sodium	29700	
Thallium	50.0	U
Vanadium	250	U
Zinc	1380000	
Mercury	0.20	U

SUMMARY OF ANALYTICAL RESULTS

TestAmerica Edison - 460-6723-1

QUALIFIERS

GC Semi VOA

U: Indicates the analyte was analyzed for but not

GC/MS Semi VOA

*: Recovery or RPD exceeds control limits

J: Result is less than the RL but greater than or e

U: Indicates the analyte was analyzed for but not

GC/MS VOA

U: Indicates the analyte was analyzed for but not

General Chemistry

U: Indicates the analyte was analyzed for but not

Metals

4: MS, MSD: The analyte present in the original s

J: Result is less than the RL but greater than or e

U: Indicates the analyte was analyzed for but not

SUMMARY OF ANALYTICAL RESULTS

TestAmerica Edison - 460-6723-1

Sample ID
Lab Sample Number
Sampling Date
Matrix
Dilution Factor
Units
GC/MS VOA - 8260B
Dichlorodifluoromethane
Chloromethane
Vinyl chloride
Bromomethane
Chloroethane
Trichlorofluoromethane
1,1-Dichloroethene
1,1,2-Trichloro-1,2,2-trifluoroethane
Acetone
Carbon disulfide
Methyl acetate
Methylene Chloride
trans-1,2-Dichloroethene
Methyl tert-butyl ether
1,1-Dichloroethane
cis-1,2-Dichloroethene
2-Butanone (MEK)
Chloroform
1,1,1-Trichloroethane
Cyclohexane
Carbon tetrachloride
Benzene
1,2-Dichloroethane
Trichloroethene
Methylcyclohexane
1,2-Dichloropropane
Dichlorobromomethane

cis-1,3-Dichloropropene
4-Methyl-2-pentanone (MIBK)
Toluene
trans-1,3-Dichloropropene
1,1,2-Trichloroethane
Tetrachloroethene
2-Hexanone
Chlorodibromomethane
1,2-Dibromoethane
Chlorobenzene
Ethylbenzene
Xylenes, Total
Styrene
Bromoform
Isopropylbenzene
1,1,2,2-Tetrachloroethane
1,3-Dichlorobenzene
1,4-Dichlorobenzene
1,2-Dichlorobenzene
1,2-Dibromo-3-Chloropropane
1,2,4-Trichlorobenzene
Total Estimated Conc. (TICs)

SUMMARY OF ANALYTICAL RESULTS

TestAmerica Edison - 460-6723-1

Sample ID
Lab Sample Number
Sampling Date
Matrix
Dilution Factor
Units
GC/MS Semi VOA - 8270C
Benzaldehyde
Phenol
Bis(2-chloroethyl)ether
2-Chlorophenol
2-Methylphenol
2,2'-oxybis[1-chloropropane]
Acetophenone
4-Methylphenol
N-Nitrosodi-n-propylamine
Hexachloroethane
Nitrobenzene
Isophorone
2-Nitrophenol
2,4-Dimethylphenol
Bis(2-chloroethoxy)methane
2,4-Dichlorophenol
Naphthalene
4-Chloroaniline
Hexachlorobutadiene
Caprolactam
4-Chloro-3-methylphenol
2-Methylnaphthalene
Hexachlorocyclopentadiene
2,4,6-Trichlorophenol

2,4,5-Trichlorophenol
1,1'-Biphenyl
2-Chloronaphthalene
2-Nitroaniline
Dimethyl phthalate
2,6-Dinitrotoluene
Acenaphthylene
3-Nitroaniline
Acenaphthene
2,4-Dinitrophenol
4-Nitrophenol
Dibenzofuran
2,4-Dinitrotoluene
Diethyl phthalate
Fluorene
4-Chlorophenyl phenyl ether
4-Nitroaniline
4,6-Dinitro-2-methylphenol
N-Nitrosodiphenylamine
4-Bromophenyl phenyl ether
Hexachlorobenzene
Atrazine
Pentachlorophenol
Phenanthrene
Anthracene
Carbazole
Di-n-butyl phthalate
Fluoranthene
Pyrene
Butyl benzyl phthalate
3,3'-Dichlorobenzidine
Benzo[a]anthracene
Chrysene
Bis(2-ethylhexyl) phthalate
Di-n-octyl phthalate
Benzo[b]fluoranthene
Benzo[k]fluoranthene
Benzo[a]pyrene

Indeno[1,2,3-cd]pyrene
Dibenz(a,h)anthracene
Benzo[g,h,i]perylene
Total Estimated Conc. (TICs)

SUMMARY OF ANALYTICAL RESULTS

TestAmerica Edison - 460-6723-1

Sample ID
Lab Sample Number
Sampling Date
Matrix
Dilution Factor
Units
GC Semi VOA - 8081A
alpha-BHC
beta-BHC
delta-BHC
gamma-BHC (Lindane)
Heptachlor
Aldrin
Heptachlor epoxide
Endosulfan I
Dieldrin
4,4'-DDE
Endrin
Endosulfan II
4,4'-DDD
Endosulfan sulfate
4,4'-DDT
Methoxychlor
Endrin ketone
Endrin aldehyde
alpha-Chlordane
gamma-Chlordane
Toxaphene

SUMMARY OF ANALYTICAL RESULTS

TestAmerica Edison - 460-6723-1

Sample ID
Lab Sample Number
Sampling Date
Matrix
Dilution Factor
Units
GC Semi VOA - 8082
PCB-1016
PCB-1221
PCB-1232
PCB-1242
PCB-1248
PCB-1254
PCB-1260

SUMMARY OF ANALYTICAL RESULTS

TestAmerica Edison - 460-6723-1

Sample ID
Lab Sample Number
Sampling Date
Matrix
Dilution Factor
Units
General Chemistry
Hardness as calcium carbonate - mg/L
Cyanide, Total - mg/L

SUMMARY OF ANALYTICAL RESULTS

TestAmerica Edison - 460-6723-1

Sample ID	**NVF-GW-UNKNOWN**	
Lab Sample Number	**460-6723-9**	
Sampling Date	**10/12/2009 3:26:00 PM**	
Matrix	**Water**	
Dilution Factor		
Units	**ug/L**	
	Low	
Metals		
Aluminum	582	J
Antimony	62.9	
Arsenic	25.0	U
Barium	232	J
Beryllium	10.0	U
Cadmium	21.0	J
Calcium	48700	
Chromium	50.0	U
Cobalt	19.9	J
Copper	125	U
Iron	11000	
Lead	25.0	U
Magnesium	45500	
Manganese	7400	
Nickel	278	
Potassium	13800	J
Selenium	50.0	U
Silver	5.5	J
Sodium	52500	
Thallium	50.0	U
Vanadium	250	U
Zinc	1290000	
Mercury	0.20	U

SUMMARY OF ANALYTICAL RESULTS

TestAmerica Edison - 460-6723-1

QUALIFIERS

GC Semi VOA

U: Indicates the analyte was analyzed for but not

GC/MS Semi VOA

*: Recovery or RPD exceeds control limits

J: Result is less than the RL but greater than or e

U: Indicates the analyte was analyzed for but not

GC/MS VOA

U: Indicates the analyte was analyzed for but not

General Chemistry

U: Indicates the analyte was analyzed for but not

Metals

4: MS, MSD: The analyte present in the original s

J: Result is less than the RL but greater than or e

U: Indicates the analyte was analyzed for but not

SUMMARY OF ANALYTICAL RESULTS

TestAmerica Edison - 460-6777-1

Sample ID	NVF-GW-DPW4		NVF-GW-DPW9		NVF-GW-RP1		NVF-GW-RP91	
Lab Sample Number	460-6777-1		460-6777-2		460-6777-4		460-6777-5	
Sampling Date	10/13/2009 8:55:00 AM		10/13/2009 11:35:00 AM		10/13/2009 2:40:00 PM		10/13/2009 2:40:00 PM	
Matrix	Water		Water		Water		Water	
Dilution Factor	1		1		1		1	
Units	ug/L		ug/L		ug/L		ug/L	
	Low		Low		Low		Low	
GC/MS VOA - 8260B								
Dichlorodifluoromethane	1.0	U	1.0	U	1.0	U	1.0	U
Chloromethane	1.0	U	1.0	U	1.0	U	1.0	U
Vinyl chloride	1.0	U	1.0	U	1.0	U	1.0	U
Bromomethane	1.0	U	1.0	U	1.0	U	1.0	U
Chloroethane	1.0	U	1.0	U	1.0	U	1.0	U
Trichlorofluoromethane	1.0	U	1.0	U	1.0	U	1.0	U
1,1-Dichloroethene	1.0	U	1.0	U	1.0	U	1.0	U
1,1,2-Trichloro-1,2,2-trifluoroethane	1.0	U	1.0	U	1.0	U	1.0	U
Acetone	10	U	10	U	10	U	10	U
Carbon disulfide	1.0	U	1.0	U	1.0	U	1.0	U
Methyl acetate	2.0	U	2.0	U	2.0	U	2.0	U
Methylene Chloride	1.0	U	1.0	U	1.0	U	1.0	U
trans-1,2-Dichloroethene	1.0	U	1.0	U	1.0	U	1.0	U
Methyl tert-butyl ether	1.0	U	1.0	U	1.0	U	1.0	U
1,1-Dichloroethane	1.0	U	1.0	U	1.0	U	1.0	U
cis-1,2-Dichloroethene	1.0	U	1.0	U	1.0	U	1.0	U
2-Butanone (MEK)	10	U	10	U	10	U	10	U
Chloroform	1.0	U	0.75	J	1.0	U	1.0	U
1,1,1-Trichloroethane	1.0	U	1.0	U	1.0	U	1.0	U
Cyclohexane	1.0	U	1.0	U	1.0	U	1.0	U
Carbon tetrachloride	1.0	U	1.0	U	1.0	U	1.0	U
Benzene	1.0	U	1.0	U	1.0	U	1.0	U
1,2-Dichloroethane	1.0	U	1.0	U	1.0	U	1.0	U
Trichloroethene	1.0	U	1.0	U	1.0	U	1.0	U
Methylcyclohexane	1.0	U	1.0	U	1.0	U	1.0	U
1,2-Dichloropropane	1.0	U	1.0	U	1.0	U	1.0	U
Dichlorobromomethane	1.0	U	1.0	U	1.0	U	1.0	U

cis-1,3-Dichloropropene	1.0	U	1.0	U	1.0	U	1.0	U
4-Methyl-2-pentanone (MIBK)	10	U	10	U	10	U	10	U
Toluene	1.0	U	1.0	U	1.0	U	1.0	U
trans-1,3-Dichloropropene	1.0	U	1.0	U	1.0	U	1.0	U
1,1,2-Trichloroethane	1.0	U	1.0	U	1.0	U	1.0	U
Tetrachloroethene	1.0	U	1.0	U	1.0	U	1.0	U
2-Hexanone	10	U	10	U	10	U	10	U
Chlorodibromomethane	1.0	U	1.0	U	1.0	U	1.0	U
1,2-Dibromoethane	1.0	U	1.0	U	1.0	U	1.0	U
Chlorobenzene	1.0	U	1.0	U	1.0	U	1.0	U
Ethylbenzene	1.0	U	1.0	U	1.0	U	1.0	U
Xylenes, Total	3.0	U	3.0	U	3.0	U	3.0	U
Styrene	1.0	U	1.0	U	1.0	U	1.0	U
Bromoform	1.0	U	1.0	U	1.0	U	1.0	U
Isopropylbenzene	1.0	U	1.0	U	1.0	U	1.0	U
1,1,2,2-Tetrachloroethane	1.0	U	1.0	U	1.0	U	1.0	U
1,3-Dichlorobenzene	1.0	U	1.0	U	1.0	U	1.0	U
1,4-Dichlorobenzene	1.0	U	1.0	U	1.0	U	1.0	U
1,2-Dichlorobenzene	1.0	U	1.0	U	1.0	U	1.0	U
1,2-Dibromo-3-Chloropropane	1.0	U	1.0	U	1.0	U	1.0	U
1,2,4-Trichlorobenzene	1.0	U	1.0	U	1.0	U	1.0	U
	0		0		0		0	
Total Estimated Conc. (TICs)								

TestAmerica

SUMMARY OF ANALYTICAL RESULTS

TestAmerica Edison - 460-6777-1

Sample ID	**NVF-GW-DPW4**		**NVF-GW-DPW9**		**NVF-GW-RP1**		**NVF-GW-RP91**	
Lab Sample Number	**460-6777-1**		**460-6777-2**		**460-6777-4**		**460-6777-5**	
Sampling Date	**10/13/2009 8:55:00 AM**		**10/13/2009 11:35:00 AM**		**10/13/2009 2:40:00 PM**		**10/13/2009 2:40:00 PM**	
Matrix	**Water**		**Water**		**Water**		**Water**	
Dilution Factor	**1**		**1**		**1**		**1**	
Units	**ug/L**		**ug/L**		**ug/L**		**ug/L**	
	Low		**Low**		**Low**		**Low**	
GC/MS Semi VOA - 8270C								
Benzaldehyde	11	U *	11	U *	10	U *	10	U *
Phenol	11	U	11	U	10	U	10	U
Bis(2-chloroethyl)ether	1.1	U	1.1	U	1.0	U	1.0	U
2-Chlorophenol	11	U	11	U	10	U	10	U
2-Methylphenol	11	U	11	U	10	U	10	U
2,2'-oxybis[1-chloropropane]	11	U	11	U	10	U	10	U
Acetophenone	11	U	11	U	10	U	10	U
4-Methylphenol	11	U	11	U	10	U	10	U
N-Nitrosodi-n-propylamine	1.1	U *	1.1	U *	1.0	U *	1.0	U *
Hexachloroethane	1.1	U	1.1	U	1.0	U	1.0	U
Nitrobenzene	1.1	U	1.1	U	1.0	U	1.0	U
Isophorone	11	U	11	U	10	U	10	U
2-Nitrophenol	11	U	11	U	10	U	10	U
2,4-Dimethylphenol	11	U	11	U	10	U	10	U
Bis(2-chloroethoxy)methane	11	U	11	U	10	U	10	U
2,4-Dichlorophenol	11	U	11	U	10	U	10	U
Naphthalene	11	U	11	U	10	U	10	U
4-Chloroaniline	11	U	11	U	10	U	10	U
Hexachlorobutadiene	2.1	U	2.1	U	2.0	U	2.0	U
Caprolactam	4.0	J	11	U	10	U	10	U
4-Chloro-3-methylphenol	11	U	11	U	10	U	10	U
2-Methylnaphthalene	11	U	11	U	10	U	10	U
Hexachlorocyclopentadiene	11	U	11	U	10	U	10	U
2,4,6-Trichlorophenol	11	U	11	U	10	U	10	U

2,4,5-Trichlorophenol	11	U	11	U	10	U	10	U
1,1'-Biphenyl	11	U	11	U	10	U	10	U
2-Chloronaphthalene	11	U	11	U	10	U	10	U
2-Nitroaniline	21	U	21	U	20	U	20	U
Dimethyl phthalate	11	U	11	U	10	U	10	U
2,6-Dinitrotoluene	2.1	U	2.1	U	2.0	U	2.0	U
Acenaphthylene	11	U	11	U	10	U	10	U
3-Nitroaniline	21	U	21	U	20	U	20	U
Acenaphthene	11	U	11	U	10	U	10	U
2,4-Dinitrophenol	32	U	32	U	31	U	31	U
4-Nitrophenol	32	U	32	U	31	U	31	U
Dibenzofuran	11	U	11	U	10	U	10	U
2,4-Dinitrotoluene	2.1	U	2.1	U	2.0	U	2.0	U
Diethyl phthalate	11	U	11	U	10	U	10	U
Fluorene	11	U	11	U	10	U	10	U
4-Chlorophenyl phenyl ether	11	U	11	U	10	U	10	U
4-Nitroaniline	21	U	21	U	20	U	20	U
4,6-Dinitro-2-methylphenol	32	U	32	U	31	U	31	U
N-Nitrosodiphenylamine	11	U	11	U	10	U	10	U
4-Bromophenyl phenyl ether	11	U	11	U	10	U	10	U
Hexachlorobenzene	1.1	U	1.1	U	1.0	U	1.0	U
Atrazine	11	U	11	U	10	U	10	U
Pentachlorophenol	32	U	32	U	31	U	31	U
Phenanthrene	11	U	11	U	10	U	10	U
Anthracene	11	U	11	U	10	U	10	U
Carbazole	11	U	11	U	10	U	10	U
Di-n-butyl phthalate	11	U	11	U	10	U	10	U
Fluoranthene	11	U	11	U	10	U	10	U
Pyrene	11	U	11	U	10	U	10	U
Butyl benzyl phthalate	11	U	11	U	10	U	10	U
3,3'-Dichlorobenzidine	21	U	21	U	20	U	20	U
Benzo[a]anthracene	1.1	U	1.1	U	1.0	U	1.0	U
Chrysene	11	U	11	U	10	U	10	U
Bis(2-ethylhexyl) phthalate	11	U	11	U	10	U	10	U
Di-n-octyl phthalate	11	U	11	U	10	U	10	U
Benzo[b]fluoranthene	1.1	U *	1.1	U *	1.0	U *	1.0	U *
Benzo[k]fluoranthene	1.1	U *	1.1	U *	1.0	U *	1.0	U *
Benzo[a]pyrene	1.1	U	1.1	U	1.0	U	1.0	U

Indeno[1,2,3-cd]pyrene	1.1	U *	1.1	U *	1.0	U *	1.0	U *
Dibenz(a,h)anthracene	1.1	U	1.1	U	1.0	U	1.0	U
Benzo[g,h,i]perylene	11	U	11	U	10	U	10	U
	0		0		0		0	
Total Estimated Conc. (TICs)								

TestAmerica

SUMMARY OF ANALYTICAL RESULTS

TestAmerica Edison - 460-6777-1

Sample ID	**NVF-GW-DPW4**		**NVF-GW-DPW9**		**NVF-GW-RP1**		**NVF-GW-RP91**	
Lab Sample Number	**460-6777-1**		**460-6777-2**		**460-6777-4**		**460-6777-5**	
Sampling Date	**10/13/2009 8:55:00 AM**		**10/13/2009 11:35:00 AM**		**10/13/2009 2:40:00 PM**		**10/13/2009 2:40:00 PM**	
Matrix	**Water**		**Water**		**Water**		**Water**	
Dilution Factor	**1**		**1**		**1**		**1**	
Units	**ug/L**		**ug/L**		**ug/L**		**ug/L**	
	Low		**Low**		**Low**		**Low**	
GC Semi VOA - 8081A								
alpha-BHC	0.053	U	0.051	U	0.052	U	0.052	U
beta-BHC	0.053	U	0.051	U	0.052	U	0.052	U
delta-BHC	0.053	U	0.051	U	0.052	U	0.052	U
gamma-BHC (Lindane)	0.053	U	0.012	J p	0.052	U	0.052	U
Heptachlor	0.053	U	0.051	U	0.052	U	0.052	U
Aldrin	0.053	U	0.051	U	0.052	U	0.052	U
Heptachlor epoxide	0.053	U	0.051	U	0.052	U	0.052	U
Endosulfan I	0.053	U	0.051	U	0.052	U	0.052	U
Dieldrin	0.053	U	0.051	U	0.052	U	0.052	U
4,4'-DDE	0.053	U	0.051	U	0.052	U	0.052	U
Endrin	0.053	U	0.051	U	0.052	U	0.052	U
Endosulfan II	0.053	U	0.051	U	0.052	U	0.052	U
4,4'-DDD	0.053	U	0.051	U	0.052	U	0.052	U
Endosulfan sulfate	0.053	U *	0.051	U *	0.052	U *	0.052	U *
4,4'-DDT	0.053	U	0.051	U	0.052	U	0.052	U
Methoxychlor	0.053	U	0.051	U	0.052	U	0.052	U
Endrin ketone	0.014	J p	0.012	J p	0.052	U	0.012	J p
Endrin aldehyde	0.053	U	0.051	U	0.052	U	0.052	U
alpha-Chlordane	0.053	U	0.051	U	0.052	U	0.052	U
gamma-Chlordane	0.053	U	0.051	U	0.052	U	0.052	U
Toxaphene	0.53	U	0.51	U	0.52	U	0.52	U

SUMMARY OF ANALYTICAL RESULTS

TestAmerica Edison - 460-6777-1

Sample ID	NVF-GW-DPW4		NVF-GW-DPW9		NVF-GW-RP1		NVF-GW-RP91	
Lab Sample Number	460-6777-1		460-6777-2		460-6777-4		460-6777-5	
Sampling Date	10/13/2009 8:55:00 AM		10/13/2009 11:35:00 AM		10/13/2009 2:40:00 PM		10/13/2009 2:40:00 PM	
Matrix	Water		Water		Water		Water	
Dilution Factor	1		1		1		1	
Units	ug/L		ug/L		ug/L		ug/L	
	Low		Low		Low		Low	
GC Semi VOA - 8082								
PCB-1016	0.53	U	0.51	U	0.52	U	0.52	U
PCB-1221	0.53	U	0.51	U	0.52	U	0.52	U
PCB-1232	0.53	U	0.51	U	0.52	U	0.52	U
PCB-1242	0.53	U	0.51	U	0.52	U	0.52	U
PCB-1248	0.53	U	0.51	U	0.52	U	0.52	U
PCB-1254	0.53	U	0.51	U	0.52	U	0.52	U
PCB-1260	0.53	U	0.51	U	0.52	U	0.52	U

SUMMARY OF ANALYTICAL RESULTS

TestAmerica Edison - 460-6777-1

Sample ID	NVF-GW-DPW4		NVF-GW-DPW9		NVF-GW-RP1		NVF-GW-RP91	
Lab Sample Number	460-6777-1		460-6777-2		460-6777-4		460-6777-5	
Sampling Date	10/13/2009 8:55:00 AM		10/13/2009 11:35:00 AM		10/13/2009 2:40:00 PM		10/13/2009 2:40:00 PM	
Matrix	Water		Water		Water		Water	
Dilution Factor	1		1		1		1	
Units								
	Low		Low		Low		Low	
General Chemistry								
Hardness as calcium carbonate - mg/L	3190		323		152		152	
Cyanide, Total - mg/L	0.010	U	0.010	U	0.010	U	0.010	U

TestAmerica

SUMMARY OF ANALYTICAL RESULTS

TestAmerica Edison - 460-6777-1

Sample ID	**NVF-GW-DPW4**		**NVF-GW-DPW4**		**NVF-GW-DPW9**		**NVF-GW-DPW9**	
Lab Sample Number	**460-6777-1**		**460-6777-1**		**460-6777-2**		**460-6777-2**	
Sampling Date	**10/13/2009 8:55:00 AM**		**10/13/2009 8:55:00 AM**		**10/13/2009 11:35:00 AM**		**10/13/2009 11:35:00 AM**	
Matrix	**Water**		**Water**		**Water**		**Water**	
Dilution Factor								
Units	**ug/L**		**ug/L**		**ug/L**		**ug/L**	
	Dissolved Low		**Low**		**Dissolved Low**		**Low**	
Metals								
Aluminum	200	U	182	J	200	U	571	
Antimony	10.0	U	20.8		6.8	J	15.8	
Arsenic	5.0	U	5.0	U	5.0	U	5.0	U
Barium	295		256		198	J	209	
Beryllium	2.0	U	2.0	U	2.0	U	2.0	U
Cadmium	33.6		30.0		5.1		5.1	
Calcium	179000		151000		17200		18700	
Chromium	10.0	U	10.0	U	10.0	U	10.0	U
Cobalt	50.0	J	41.5	J	5.5	J	5.9	J
Copper	25.0	U	25.0	U	5.5	J	25.0	U
Iron	9820		7520		672		1310	
Lead	5.0	U	5.0	U	5.0	U	5.0	U
Magnesium	95200		76800		7840		8270	
Manganese	5170		3960		160		166	
Nickel	368		318		34.8	J	36.4	J
Potassium	12100		10300		4670	J	4820	J
Selenium	10.0	U	10.0	U	10.0	U	10.0	U
Silver	5.0	J	2.4	J	10.0	U	10.0	U
Sodium	62300		57600		14200		14600	
Thallium	10.0	U	9.8	J	10.0	U	10.0	U
Vanadium	50.0	U	50.0	U	50.0	U	3.8	J
Zinc	1690000	B	1380000		158000	B	144000	
Mercury	0.20	U	0.20	U	0.20	U	0.20	U

SUMMARY OF ANALYTICAL RESULTS

TestAmerica Edison - 460-6777-1

QUALIFIERS

GC Semi VOA

*: Recovery or RPD exceeds control limits

E: Result exceeded calibration range.

J: Result is less than the RL but greater than or equal to the MDL and the concentration is an approximate value.

p: The %RPD between the primary and confirmation column/detector is >40%. The lower value has been reported.

U: Indicates the analyte was analyzed for but not detected.

GC/MS Semi VOA

*: Recovery or RPD exceeds control limits

E: Result exceeded calibration range.

J: Result is less than the RL but greater than or equal to the MDL and the concentration is an approximate value.

U: Indicates the analyte was analyzed for but not detected.

GC/MS VOA

J: Result is less than the RL but greater than or equal to the MDL and the concentration is an approximate value.

U: Indicates the analyte was analyzed for but not detected.

General Chemistry

U: Indicates the analyte was analyzed for but not detected.

Metals

4: MS, MSD: The analyte present in the original sample is 4 times greater than the matrix spike concentration; therefore, control limits are not applicable.

B: Compound was found in the blank and sample.

J: Result is less than the RL but greater than or equal to the MDL and the concentration is an approximate value.

U: Indicates the analyte was analyzed for but not detected.

SUMMARY OF ANALYTICAL RESULTS

TestAmerica Edison - 460-6777-1

Sample ID	TB	
Lab Sample Number	460-6777-6	
Sampling Date	10/8/2009 4:50:00 PM	
Matrix	Water	
Dilution Factor	1	
Units	ug/L	
	Low	
GC/MS VOA - 8260B		
Dichlorodifluoromethane	1.0	U
Chloromethane	1.0	U
Vinyl chloride	1.0	U
Bromomethane	1.0	U
Chloroethane	1.0	U
Trichlorofluoromethane	1.0	U
1,1-Dichloroethene	1.0	U
1,1,2-Trichloro-1,2,2-trifluoroethane	1.0	U
Acetone	10	U
Carbon disulfide	1.0	U
Methyl acetate	2.0	U
Methylene Chloride	1.0	U
trans-1,2-Dichloroethene	1.0	U
Methyl tert-butyl ether	1.0	U
1,1-Dichloroethane	1.0	U
cis-1,2-Dichloroethene	1.0	U
2-Butanone (MEK)	10	U
Chloroform	1.0	U
1,1,1-Trichloroethane	1.0	U
Cyclohexane	1.0	U
Carbon tetrachloride	1.0	U
Benzene	1.0	U
1,2-Dichloroethane	1.0	U
Trichloroethene	1.0	U
Methylcyclohexane	1.0	U
1,2-Dichloropropane	1.0	U
Dichlorobromomethane	1.0	U

cis-1,3-Dichloropropene	1.0	U
4-Methyl-2-pentanone (MIBK)	10	U
Toluene	1.0	U
trans-1,3-Dichloropropene	1.0	U
1,1,2-Trichloroethane	1.0	U
Tetrachloroethene	1.0	U
2-Hexanone	10	U
Chlorodibromomethane	1.0	U
1,2-Dibromoethane	1.0	U
Chlorobenzene	1.0	U
Ethylbenzene	1.0	U
Xylenes, Total	3.0	U
Styrene	1.0	U
Bromoform	1.0	U
Isopropylbenzene	1.0	U
1,1,2,2-Tetrachloroethane	1.0	U
1,3-Dichlorobenzene	1.0	U
1,4-Dichlorobenzene	1.0	U
1,2-Dichlorobenzene	1.0	U
1,2-Dibromo-3-Chloropropane	1.0	U
1,2,4-Trichlorobenzene	1.0	U
	0	
Total Estimated Conc. (TICs)		

SUMMARY OF ANALYTICAL RESULTS

TestAmerica Edison - 460-6777-1

Sample ID
Lab Sample Number
Sampling Date
Matrix
Dilution Factor
Units
GC/MS Semi VOA - 8270C
Benzaldehyde
Phenol
Bis(2-chloroethyl)ether
2-Chlorophenol
2-Methylphenol
2,2'-oxybis[1-chloropropane]
Acetophenone
4-Methylphenol
N-Nitrosodi-n-propylamine
Hexachloroethane
Nitrobenzene
Isophorone
2-Nitrophenol
2,4-Dimethylphenol
Bis(2-chloroethoxy)methane
2,4-Dichlorophenol
Naphthalene
4-Chloroaniline
Hexachlorobutadiene
Caprolactam
4-Chloro-3-methylphenol
2-Methylnaphthalene
Hexachlorocyclopentadiene
2,4,6-Trichlorophenol

2,4,5-Trichlorophenol
1,1'-Biphenyl
2-Chloronaphthalene
2-Nitroaniline
Dimethyl phthalate
2,6-Dinitrotoluene
Acenaphthylene
3-Nitroaniline
Acenaphthene
2,4-Dinitrophenol
4-Nitrophenol
Dibenzofuran
2,4-Dinitrotoluene
Diethyl phthalate
Fluorene
4-Chlorophenyl phenyl ether
4-Nitroaniline
4,6-Dinitro-2-methylphenol
N-Nitrosodiphenylamine
4-Bromophenyl phenyl ether
Hexachlorobenzene
Atrazine
Pentachlorophenol
Phenanthrene
Anthracene
Carbazole
Di-n-butyl phthalate
Fluoranthene
Pyrene
Butyl benzyl phthalate
3,3'-Dichlorobenzidine
Benzo[a]anthracene
Chrysene
Bis(2-ethylhexyl) phthalate
Di-n-octyl phthalate
Benzo[b]fluoranthene
Benzo[k]fluoranthene
Benzo[a]pyrene

Indeno[1,2,3-cd]pyrene
Dibenz(a,h)anthracene
Benzo[g,h,i]perylene
Total Estimated Conc. (TICs)

SUMMARY OF ANALYTICAL RESULTS

TestAmerica Edison - 460-6777-1

Sample ID
Lab Sample Number
Sampling Date
Matrix
Dilution Factor
Units
GC Semi VOA - 8081A
alpha-BHC
beta-BHC
delta-BHC
gamma-BHC (Lindane)
Heptachlor
Aldrin
Heptachlor epoxide
Endosulfan I
Dieldrin
4,4'-DDE
Endrin
Endosulfan II
4,4'-DDD
Endosulfan sulfate
4,4'-DDT
Methoxychlor
Endrin ketone
Endrin aldehyde
alpha-Chlordane
gamma-Chlordane
Toxaphene

SUMMARY OF ANALYTICAL RESULTS

TestAmerica Edison - 460-6777-1

Sample ID
Lab Sample Number
Sampling Date
Matrix
Dilution Factor
Units
GC Semi VOA - 8082
PCB-1016
PCB-1221
PCB-1232
PCB-1242
PCB-1248
PCB-1254
PCB-1260

SUMMARY OF ANALYTICAL RESULTS

TestAmerica Edison - 460-6777-1

Sample ID
Lab Sample Number
Sampling Date
Matrix
Dilution Factor
Units
General Chemistry
Hardness as calcium carbonate - mg/L
Cyanide, Total - mg/L

SUMMARY OF ANALYTICAL RESULTS

TestAmerica Edison - 460-6777-1

Sample ID	**NVF-GW-RP1**	
Lab Sample Number	**460-6777-4**	
Sampling Date	**10/13/2009 2:40:00 PM**	
Matrix	**Water**	
Dilution Factor	**1**	
Units	**ug/L**	
	Dissolved Low	
Metals		
Aluminum	200	U
Antimony	10.0	U
Arsenic	5.0	U
Barium	97.8	J
Beryllium	2.0	U
Cadmium	5.0	U
Calcium	23300	
Chromium	10.0	U
Cobalt	50.0	U
Copper	25.0	U
Iron	150	U
Lead	5.0	U
Magnesium	10000	
Manganese	350	
Nickel	11.7	J
Potassium	3380	J
Selenium	10.0	U
Silver	10.0	U
Sodium	6220	
Thallium	10.0	U
Vanadium	50.0	U
Zinc	32100	B
Mercury	0.20	U

SUMMARY OF ANALYTICAL RESULTS

TestAmerica Edison - 460-6777-1

QUALIFIERS

GC Semi VOA

*: Recovery or RPD exceeds control limits

E: Result exceeded calibration range.

J: Result is less than the RL but greater than or e

p: The %RPD between the primary and confirmat

U: Indicates the analyte was analyzed for but not

GC/MS Semi VOA

*: Recovery or RPD exceeds control limits

E: Result exceeded calibration range.

J: Result is less than the RL but greater than or e

U: Indicates the analyte was analyzed for but not

GC/MS VOA

J: Result is less than the RL but greater than or e

U: Indicates the analyte was analyzed for but not

General Chemistry

U: Indicates the analyte was analyzed for but not

Metals

4: MS, MSD: The analyte present in the original s

B: Compound was found in the blank and sample

J: Result is less than the RL but greater than or e

U: Indicates the analyte was analyzed for but not

SUMMARY OF ANALYTICAL RESULTS

TestAmerica Edison - 460-6777-1

Sample ID
Lab Sample Number
Sampling Date
Matrix
Dilution Factor
Units
GC/MS VOA - 8260B
Dichlorodifluoromethane
Chloromethane
Vinyl chloride
Bromomethane
Chloroethane
Trichlorofluoromethane
1,1-Dichloroethene
1,1,2-Trichloro-1,2,2-trifluoroethane
Acetone
Carbon disulfide
Methyl acetate
Methylene Chloride
trans-1,2-Dichloroethene
Methyl tert-butyl ether
1,1-Dichloroethane
cis-1,2-Dichloroethene
2-Butanone (MEK)
Chloroform
1,1,1-Trichloroethane
Cyclohexane
Carbon tetrachloride
Benzene
1,2-Dichloroethane
Trichloroethene
Methylcyclohexane
1,2-Dichloropropane
Dichlorobromomethane

cis-1,3-Dichloropropene
4-Methyl-2-pentanone (MIBK)
Toluene
trans-1,3-Dichloropropene
1,1,2-Trichloroethane
Tetrachloroethene
2-Hexanone
Chlorodibromomethane
1,2-Dibromoethane
Chlorobenzene
Ethylbenzene
Xylenes, Total
Styrene
Bromoform
Isopropylbenzene
1,1,2,2-Tetrachloroethane
1,3-Dichlorobenzene
1,4-Dichlorobenzene
1,2-Dichlorobenzene
1,2-Dibromo-3-Chloropropane
1,2,4-Trichlorobenzene
Total Estimated Conc. (TICs)

SUMMARY OF ANALYTICAL RESULTS

TestAmerica Edison - 460-6777-1

Sample ID
Lab Sample Number
Sampling Date
Matrix
Dilution Factor
Units
GC/MS Semi VOA - 8270C
Benzaldehyde
Phenol
Bis(2-chloroethyl)ether
2-Chlorophenol
2-Methylphenol
2,2'-oxybis[1-chloropropane]
Acetophenone
4-Methylphenol
N-Nitrosodi-n-propylamine
Hexachloroethane
Nitrobenzene
Isophorone
2-Nitrophenol
2,4-Dimethylphenol
Bis(2-chloroethoxy)methane
2,4-Dichlorophenol
Naphthalene
4-Chloroaniline
Hexachlorobutadiene
Caprolactam
4-Chloro-3-methylphenol
2-Methylnaphthalene
Hexachlorocyclopentadiene
2,4,6-Trichlorophenol

2,4,5-Trichlorophenol
1,1'-Biphenyl
2-Chloronaphthalene
2-Nitroaniline
Dimethyl phthalate
2,6-Dinitrotoluene
Acenaphthylene
3-Nitroaniline
Acenaphthene
2,4-Dinitrophenol
4-Nitrophenol
Dibenzofuran
2,4-Dinitrotoluene
Diethyl phthalate
Fluorene
4-Chlorophenyl phenyl ether
4-Nitroaniline
4,6-Dinitro-2-methylphenol
N-Nitrosodiphenylamine
4-Bromophenyl phenyl ether
Hexachlorobenzene
Atrazine
Pentachlorophenol
Phenanthrene
Anthracene
Carbazole
Di-n-butyl phthalate
Fluoranthene
Pyrene
Butyl benzyl phthalate
3,3'-Dichlorobenzidine
Benzo[a]anthracene
Chrysene
Bis(2-ethylhexyl) phthalate
Di-n-octyl phthalate
Benzo[b]fluoranthene
Benzo[k]fluoranthene
Benzo[a]pyrene

Indeno[1,2,3-cd]pyrene
Dibenz(a,h)anthracene
Benzo[g,h,i]perylene
Total Estimated Conc. (TICs)

SUMMARY OF ANALYTICAL RESULTS

TestAmerica Edison - 460-6777-1

Sample ID
Lab Sample Number
Sampling Date
Matrix
Dilution Factor
Units
GC Semi VOA - 8081A
alpha-BHC
beta-BHC
delta-BHC
gamma-BHC (Lindane)
Heptachlor
Aldrin
Heptachlor epoxide
Endosulfan I
Dieldrin
4,4'-DDE
Endrin
Endosulfan II
4,4'-DDD
Endosulfan sulfate
4,4'-DDT
Methoxychlor
Endrin ketone
Endrin aldehyde
alpha-Chlordane
gamma-Chlordane
Toxaphene

SUMMARY OF ANALYTICAL RESULTS

TestAmerica Edison - 460-6777-1

Sample ID
Lab Sample Number
Sampling Date
Matrix
Dilution Factor
Units
GC Semi VOA - 8082
PCB-1016
PCB-1221
PCB-1232
PCB-1242
PCB-1248
PCB-1254
PCB-1260

SUMMARY OF ANALYTICAL RESULTS

TestAmerica Edison - 460-6777-1

Sample ID
Lab Sample Number
Sampling Date
Matrix
Dilution Factor
Units
General Chemistry
Hardness as calcium carbonate - mg/L
Cyanide, Total - mg/L

TestAmerica

SUMMARY OF ANALYTICAL RESULTS

TestAmerica Edison - 460-6777-1

Sample ID	**NVF-GW-RP1**		**NVF-GW-RP91**		**NVF-GW-RP91**	
Lab Sample Number	**460-6777-4**		**460-6777-5**		**460-6777-5**	
Sampling Date	**10/13/2009 2:40:00 PM**		**10/13/2009 2:40:00 PM**		**10/13/2009 2:40:00 PM**	
Matrix	**Water**		**Water**		**Water**	
Dilution Factor	**1**		**1**		**1**	
Units	**ug/L**		**ug/L**		**ug/L**	
	Low		**Dissolved Low**		**Low**	
Metals						
Aluminum	328		200	U	272	
Antimony	5.7	J	10.0	U	10.0	U
Arsenic	5.0	U	5.0	U	5.0	U
Barium	105	J	98.0	J	102	J
Beryllium	2.0	U	2.0	U	2.0	U
Cadmium	5.0	U	5.0	U	5.0	U
Calcium	21600		22500		22800	
Chromium	10.0	U	10.0	U	10.0	U
Cobalt	50.0	U	50.0	U	50.0	U
Copper	25.0	U	25.0	U	25.0	U
Iron	474		150	U	380	
Lead	5.0	U	5.0	U	5.0	U
Magnesium	8900		9780		9360	
Manganese	393		367		374	
Nickel	13.4	J	11.8	J	12.9	J
Potassium	3630	J	3320	J	3640	J
Selenium	10.0	U	10.0	U	10.0	U
Silver	10.0	U	10.0	U	10.0	U
Sodium	6660		6260		6640	
Thallium	10.0	U	10.0	U	10.0	U
Vanadium	50.0	U	50.0	U	50.0	U
Zinc	34900		32200	B	33600	
Mercury	0.20	U	0.20	U	0.20	U

SUMMARY OF ANALYTICAL RESULTS

TestAmerica Edison - 460-6777-1

QUALIFIERS

GC Semi VOA

*: Recovery or RPD exceeds control limits

E: Result exceeded calibration range.

J: Result is less than the RL but greater than or e

p: The %RPD between the primary and confirmat

U: Indicates the analyte was analyzed for but not

GC/MS Semi VOA

*: Recovery or RPD exceeds control limits

E: Result exceeded calibration range.

J: Result is less than the RL but greater than or e

U: Indicates the analyte was analyzed for but not

GC/MS VOA

J: Result is less than the RL but greater than or e

U: Indicates the analyte was analyzed for but not

General Chemistry

U: Indicates the analyte was analyzed for but not

Metals

4: MS, MSD: The analyte present in the original s

B: Compound was found in the blank and sample

J: Result is less than the RL but greater than or e

U: Indicates the analyte was analyzed for but not

TestAmerica

SUMMARY OF ANALYTICAL RESULTS: 460-6944-1

Sample ID	NVF-SB-34A				NVF-SB-12A				NVF-SB-912A			
Lab Sample No.	460-6944-27				460-6944-36				460-6944-39			
Sampling Date	10/14/2009 10:40:00 AM				10/14/2009 8:40:00 AM				10/14/2009 8:40:00 AM			
Matrix	Solid				Solid				Solid			
Dilution Factor	50				50				50			
Units	mg/kg				mg/kg				mg/kg			
VOLATILE COMPOUNDS (GC/MS)			MDL	PQL			MDL	PQL			MDL	PQL
1,1,1-Trichloroethane	0.10	U	0.025	0.10	0.16	U	0.040	0.16	0.14	U	0.034	0.14
1,1,2,2-Tetrachloroethane	0.10	U	0.0089	0.10	0.16	U	0.014	0.16	0.14	U	0.012	0.14
1,1,2-Trichloro-1,2,2-trifluoroethane	0.10	U	0.030	0.10	0.16	U	0.047	0.16	0.14	U	0.039	0.14
1,1,2-Trichloroethane	0.10	U	0.010	0.10	0.16	U	0.016	0.16	0.14	U	0.013	0.14
1,1-Dichloroethane	0.10	U	0.010	0.10	0.16	U	0.016	0.16	0.14	U	0.014	0.14
1,1-Dichloroethene	0.10	U	0.014	0.10	0.16	U	0.023	0.16	0.14	U	0.019	0.14
1,2,4-Trichlorobenzene	0.10	U	0.045	0.10	0.16	U	0.071	0.16	0.14	U	0.060	0.14
1,2-Dibromo-3-Chloropropane	0.10	U	0.016	0.10	0.16	U	0.025	0.16	0.14	U	0.021	0.14
1,2-Dibromoethane	0.10	U	0.0094	0.10	0.16	U	0.015	0.16	0.14	U	0.013	0.14
1,2-Dichlorobenzene	0.10	U	0.017	0.10	0.16	U	0.026	0.16	0.14	U	0.022	0.14
1,2-Dichloroethane	0.10	U	0.025	0.10	0.16	U	0.040	0.16	0.14	U	0.034	0.14
1,2-Dichloropropane	0.10	U	0.009	0.10	0.16	U	0.014	0.16	0.14	U	0.012	0.14
1,3-Dichlorobenzene	0.10	U	0.023	0.10	0.16	U	0.037	0.16	0.14	U	0.031	0.14
1,4-Dichlorobenzene	0.10	U	0.015	0.10	0.16	U	0.024	0.16	0.14	U	0.021	0.14
2-Butanone (MEK)	1.0	U	0.084	1.0	1.6	U	0.13	1.6	1.4	U	0.11	1.4
2-Hexanone	1.0	U	0.056	1.0	1.6	U	0.089	1.6	1.4	U	0.075	1.4
4-Methyl-2-pentanone (MIBK)	1.0	U	0.070	1.0	1.6	U	0.11	1.6	1.4	U	0.093	1.4
Acetone	1.0	U	0.25	1.0	1.6	U	0.40	1.6	1.4	U	0.34	1.4
Benzene	0.10	U	0.012	0.10	0.067	J	0.019	0.16	0.14	U	0.016	0.14
Bromoform	0.10	U	0.010	0.10	0.16	U	0.016	0.16	0.14	U	0.014	0.14
Bromomethane	0.10	U	0.032	0.10	0.16	U	0.051	0.16	0.14	U	0.043	0.14
Carbon disulfide	0.10	U	0.015	0.10	0.16	U	0.024	0.16	0.14	U	0.020	0.14

TestAmerica

SUMMARY OF ANALYTICAL RESULTS: 460-6944-1

Sample ID	NVF-SB-34A				NVF-SB-12A				NVF-SB-912A			
Lab Sample No.	460-6944-27				460-6944-36				460-6944-39			
Sampling Date	10/14/2009 10:40:00 AM				10/14/2009 8:40:00 AM				10/14/2009 8:40:00 AM			
Matrix	Solid				Solid				Solid			
Dilution Factor	50				50				50			
Units	mg/kg				mg/kg				mg/kg			
VOLATILE COMPOUNDS (GC/MS)			MDL	PQL			MDL	PQL			MDL	PQL
Carbon tetrachloride	0.10	U	0.018	0.10	0.16	U	0.029	0.16	0.14	U	0.025	0.14
Chlorobenzene	0.10	U	0.017	0.10	0.16	U	0.027	0.16	0.14	U	0.023	0.14
Chlorodibromomethane	0.10	U	0.010	0.10	0.16	U	0.016	0.16	0.14	U	0.014	0.14
Chloroethane	0.10	U	0.046	0.10	0.16	U	0.072	0.16	0.14	U	0.061	0.14
Chloroform	0.10	U	0.016	0.10	0.16	U	0.025	0.16	0.14	U	0.021	0.14
Chloromethane	0.10	U	0.022	0.10	0.16	U	0.034	0.16	0.14	U	0.029	0.14
cis-1,2-Dichloroethene	0.10	U	0.020	0.10	0.16	U	0.031	0.16	0.14	U	0.026	0.14
cis-1,3-Dichloropropene	0.10	U	0.010	0.10	0.16	U	0.017	0.16	0.14	U	0.014	0.14
Cyclohexane	0.10	U	0.013	0.10	0.34		0.020	0.16	0.081	J	0.017	0.14
Dichlorobromomethane	0.10	U	0.0092	0.10	0.16	U	0.015	0.16	0.14	U	0.012	0.14
Dichlorodifluoromethane	0.10	U	0.029	0.10	0.16	U	0.046	0.16	0.14	U	0.039	0.14
Ethylbenzene	0.10	U	0.025	0.10	0.078	J	0.040	0.16	0.14	U	0.034	0.14
Isopropylbenzene	0.10	U	0.022	0.10	0.039	J	0.034	0.16	0.14	U	0.029	0.14
Methyl acetate	0.21	U	0.034	0.21	0.32	U	0.053	0.32	0.27	U	0.045	0.27
Methyl tert-butyl ether	0.10	U	0.019	0.10	0.16	U	0.030	0.16	0.14	U	0.025	0.14
Methylcyclohexane	0.10	U	0.0082	0.10	0.77		0.013	0.16	0.23		0.011	0.14
Methylene Chloride	0.10	U	0.020	0.10	0.16	U	0.031	0.16	0.14	U	0.026	0.14
Styrene	0.10	U	0.014	0.10	0.16	U	0.023	0.16	0.14	U	0.019	0.14
Tetrachloroethene	0.10	U	0.020	0.10	0.16	U	0.032	0.16	0.14	U	0.027	0.14
Toluene	0.10	U	0.0097	0.10	0.32		0.015	0.16	0.13	J	0.013	0.14
trans-1,2-Dichloroethene	0.10	U	0.014	0.10	0.16	U	0.022	0.16	0.14	U	0.019	0.14
trans-1,3-Dichloropropene	0.10	U	0.013	0.10	0.16	U	0.020	0.16	0.14	U	0.017	0.14

TestAmerica

SUMMARY OF ANALYTICAL RESULTS: 460-6944-1

Sample ID	NVF-SB-34A				NVF-SB-12A				NVF-SB-912A			
Lab Sample No.	460-6944-27				460-6944-36				460-6944-39			
Sampling Date	10/14/2009 10:40:00 AM				10/14/2009 8:40:00 AM				10/14/2009 8:40:00 AM			
Matrix	Solid				Solid				Solid			
Dilution Factor	50				50				50			
Units	mg/kg				mg/kg				mg/kg			
VOLATILE COMPOUNDS (GC/MS)			MDL	PQL			MDL	PQL			MDL	PQL
Trichloroethene	0.10	U	0.018	0.10	0.16	U	0.029	0.16	0.14	U	0.024	0.14
Trichlorofluoromethane	0.10	U	0.016	0.10	0.16	U	0.025	0.16	0.14	U	0.021	0.14
Vinyl chloride	0.10	U	0.012	0.10	0.16	U	0.019	0.16	0.14	U	0.016	0.14
Xylenes, Total	0.31	U	0.045	0.31	0.67		0.071	0.49	0.25	J	0.060	0.41
Total Confident Conc.	0				2.1				0.23			
Total Estimated Conc. (TICs)	0				0				0			

NR: Not analyzed.

Generated on 10/23/2009 11:52:36 AM

TestAmerica

SUMMARY OF ANALYTICAL RESULTS: 460-6944-1

Sample ID	NVF-SB-9A				NVF-SB-9B				NVF-SB-9C			
Lab Sample No.	460-6944-1				460-6944-2				460-6944-3			
Sampling Date	10/14/2009 1:35:00 PM				10/14/2009 1:35:00 PM				10/14/2009 1:35:00 PM			
Matrix	Solid				Solid				Solid			
Dilution Factor	1				1				1			
Units	mg/kg				mg/kg				mg/kg			
SEMIVOLATILE COMPOUNDS (GC/MS)			MDL	PQL			MDL	PQL			MDL	PQL
1,1'-Biphenyl	0.38	U	0.063	0.38	0.40	U	0.066	0.40	0.42	U	0.069	0.42
2,2'-oxybis[1-chloropropane]	0.38	U	0.050	0.38	0.40	U	0.052	0.40	0.42	U	0.055	0.42
2,4,5-Trichlorophenol	0.38	U	0.074	0.38	0.40	U	0.077	0.40	0.42	U	0.081	0.42
2,4,6-Trichlorophenol	0.38	U	0.069	0.38	0.40	U	0.071	0.40	0.42	U	0.075	0.42
2,4-Dichlorophenol	0.38	U	0.061	0.38	0.40	U	0.064	0.40	0.42	U	0.067	0.42
2,4-Dimethylphenol	0.38	U	0.061	0.38	0.40	U	0.064	0.40	0.42	U	0.067	0.42
2,4-Dinitrophenol	1.2	U	0.081	1.2	1.2	U	0.085	1.2	1.3	U	0.089	1.3
2,4-Dinitrotoluene	0.078	U	0.011	0.078	0.081	U	0.012	0.081	0.085	U	0.012	0.085
2,6-Dinitrotoluene	0.078	U	0.0097	0.078	0.081	U	0.010	0.081	0.085	U	0.011	0.085
2-Chloronaphthalene	0.38	U	0.054	0.38	0.40	U	0.056	0.40	0.42	U	0.059	0.42
2-Chlorophenol	0.38	U	0.051	0.38	0.40	U	0.053	0.40	0.42	U	0.056	0.42
2-Methylnaphthalene	0.38	U	0.056	0.38	0.40	U	0.058	0.40	0.42	U	0.061	0.42
2-Methylphenol	0.38	U	0.055	0.38	0.40	U	0.057	0.40	0.42	U	0.060	0.42
2-Nitroaniline	0.78	U	0.10	0.78	0.81	U	0.11	0.81	0.85	U	0.11	0.85
2-Nitrophenol	0.38	U	0.063	0.38	0.40	U	0.066	0.40	0.42	U	0.069	0.42
3,3'-Dichlorobenzidine	0.78	U	0.085	0.78	0.81	U	0.088	0.81	0.85	U	0.093	0.85
3-Nitroaniline	0.78	U	0.087	0.78	0.81	U	0.090	0.81	0.85	U	0.095	0.85
4,6-Dinitro-2-methylphenol	1.2	U	0.18	1.2	1.2	U	0.19	1.2	1.3	U	0.20	1.3
4-Bromophenyl phenyl ether	0.38	U	0.068	0.38	0.40	U	0.071	0.40	0.42	U	0.075	0.42
4-Chloro-3-methylphenol	0.38	U	0.064	0.38	0.40	U	0.067	0.40	0.42	U	0.071	0.42
4-Chloroaniline	0.38	U	0.048	0.38	0.40	U	0.050	0.40	0.42	U	0.053	0.42
4-Chlorophenyl phenyl ether	0.38	U	0.066	0.38	0.40	U	0.069	0.40	0.42	U	0.072	0.42
4-Methylphenol	0.38	U	0.063	0.38	0.40	U	0.065	0.40	0.42	U	0.069	0.42
4-Nitroaniline	0.78	U	0.079	0.78	0.81	U	0.082	0.81	0.85	U	0.087	0.85
4-Nitrophenol	1.2	U	0.098	1.2	1.2	U	0.10	1.2	1.3	U	0.11	1.3

TestAmerica

SUMMARY OF ANALYTICAL RESULTS: 460-6944-1

Sample ID	NVF-SB-9A				NVF-SB-9B				NVF-SB-9C			
Lab Sample No.	460-6944-1				460-6944-2				460-6944-3			
Sampling Date	10/14/2009 1:35:00 PM				10/14/2009 1:35:00 PM				10/14/2009 1:35:00 PM			
Matrix	Solid				Solid				Solid			
Dilution Factor	1				1				1			
Units	mg/kg				mg/kg				mg/kg			
SEMIVOLATILE COMPOUNDS (GC/MS)			MDL	PQL			MDL	PQL			MDL	PQL
Acenaphthene	0.38	U	0.055	0.38	0.40	U	0.057	0.40	0.42	U	0.060	0.42
Acenaphthylene	0.38	U	0.055	0.38	0.40	U	0.057	0.40	0.42	U	0.060	0.42
Acetophenone	0.38	U	0.057	0.38	0.40	U	0.059	0.40	0.42	U	0.062	0.42
Anthracene	0.38	U	0.068	0.38	0.40	U	0.070	0.40	0.42	U	0.074	0.42
Atrazine	0.38	U	0.071	0.38	0.40	U	0.074	0.40	0.42	U	0.078	0.42
Benzaldehyde	0.38	U	0.024	0.38	0.40	U	0.025	0.40	0.42	U	0.026	0.42
Benzo[a]anthracene	0.020	J	0.0071	0.038	0.021	J	0.0074	0.040	0.025	J	0.0078	0.042
Benzo[a]pyrene	0.012	J	0.0047	0.038	0.0097	J	0.0049	0.040	0.020	J	0.0052	0.042
Benzo[b]fluoranthene	0.018	J	0.0057	0.038	0.015	J	0.0059	0.040	0.021	J	0.0063	0.042
Benzo[g,h,i]perylene	0.38	U	0.040	0.38	0.40	U	0.042	0.40	0.42	U	0.044	0.42
Benzo[k]fluoranthene	0.038	U	0.0054	0.038	0.040	U	0.0056	0.040	0.042	U	0.0059	0.042
Bis(2-chloroethoxy)methane	0.38	U	0.055	0.38	0.40	U	0.057	0.40	0.42	U	0.060	0.42
Bis(2-chloroethyl)ether	0.038	U	0.008	0.038	0.040	U	0.0083	0.040	0.042	U	0.0088	0.042
Bis(2-ethylhexyl) phthalate	0.38	U	0.051	0.38	0.40	U	0.053	0.40	0.42	U	0.056	0.42
Butyl benzyl phthalate	0.38	U	0.045	0.38	0.40	U	0.047	0.40	0.42	U	0.049	0.42
Caprolactam	0.38	U	0.053	0.38	0.40	U	0.055	0.40	0.42	U	0.058	0.42
Carbazole	0.38	U	0.061	0.38	0.40	U	0.063	0.40	0.42	U	0.067	0.42
Chrysene	0.38	U	0.056	0.38	0.40	U	0.058	0.40	0.42	U	0.061	0.42
Dibenz(a,h)anthracene	0.038	U	0.0046	0.038	0.040	U	0.0048	0.040	0.042	U	0.0051	0.042
Dibenzofuran	0.38	U	0.058	0.38	0.40	U	0.060	0.40	0.42	U	0.063	0.42
Diethyl phthalate	0.38	U	0.051	0.38	0.40	U	0.054	0.40	0.42	U	0.056	0.42
Dimethyl phthalate	0.38	U	0.052	0.38	0.40	U	0.054	0.40	0.42	U	0.057	0.42
Di-n-butyl phthalate	0.38	U	0.059	0.38	0.40	U	0.061	0.40	0.42	U	0.064	0.42
Di-n-octyl phthalate	0.38	U	0.046	0.38	0.40	U	0.047	0.40	0.42	U	0.050	0.42
Fluoranthene	0.38	U	0.064	0.38	0.40	U	0.066	0.40	0.42	U	0.070	0.42

TestAmerica

SUMMARY OF ANALYTICAL RESULTS: 460-6944-1

Sample ID	NVF-SB-9A				NVF-SB-9B				NVF-SB-9C			
Lab Sample No.	460-6944-1				460-6944-2				460-6944-3			
Sampling Date	10/14/2009 1:35:00 PM				10/14/2009 1:35:00 PM				10/14/2009 1:35:00 PM			
Matrix	Solid				Solid				Solid			
Dilution Factor	1				1				1			
Units	mg/kg				mg/kg				mg/kg			
SEMIVOLATILE COMPOUNDS (GC/MS)			MDL	PQL			MDL	PQL			MDL	PQL
Fluorene	0.38	U	0.065	0.38	0.40	U	0.068	0.40	0.42	U	0.071	0.42
Hexachlorobenzene	0.038	U	0.0053	0.038	0.040	U	0.0055	0.040	0.042	U	0.0058	0.042
Hexachlorobutadiene	0.078	U	0.016	0.078	0.081	U	0.016	0.081	0.085	U	0.017	0.085
Hexachlorocyclopentadiene	0.38	U	0.11	0.38	0.40	U	0.12	0.40	0.42	U	0.12	0.42
Hexachloroethane	0.038	U	0.0065	0.038	0.040	U	0.0067	0.040	0.042	U	0.0071	0.042
Indeno[1,2,3-cd]pyrene	0.038	U	0.0061	0.038	0.040	U	0.0064	0.040	0.017	J	0.0067	0.042
Isophorone	0.38	U	0.044	0.38	0.40	U	0.046	0.40	0.42	U	0.048	0.42
Naphthalene	0.38	U	0.056	0.38	0.40	U	0.058	0.40	0.42	U	0.061	0.42
Nitrobenzene	0.038	U	0.0086	0.038	0.040	U	0.0089	0.040	0.042	U	0.0094	0.042
N-Nitrosodi-n-propylamine	0.038	U	0.0051	0.038	0.040	U	0.0053	0.040	0.042	U	0.0056	0.042
N-Nitrosodiphenylamine	0.38	U	0.062	0.38	0.40	U	0.065	0.40	0.42	U	0.068	0.42
Pentachlorophenol	1.2	U	0.19	1.2	1.2	U	0.20	1.2	1.3	U	0.21	1.3
Phenanthrene	0.38	U	0.067	0.38	0.40	U	0.070	0.40	0.42	U	0.073	0.42
Phenol	0.38	U	0.047	0.38	0.40	U	0.049	0.40	0.42	U	0.051	0.42
Pyrene	0.38	U	0.066	0.38	0.40	U	0.069	0.40	0.42	U	0.073	0.42
Total Confident Conc.	0				0				0			
Total Estimated Conc. (TICs)	0				0				0			

NR: Not analyzed.

U: Indicates the analyte was analyzed for but not detected.

Generated on 10/23/2009 11:52:36 AM

TestAmerica

SUMMARY OF ANALYTICAL RESULTS: 460-

Sample ID	NVF-SB-29A				NVF-SB-29B				NVF-SB-22A			
Lab Sample No.	460-6944-7				460-6944-8				460-6944-15			
Sampling Date	10/14/2009 2:50:00 PM				10/14/2009 2:50:00 PM				10/14/2009 4:05:00 PM			
Matrix	Solid				Solid				Solid			
Dilution Factor	2				1				1			
Units	mg/kg				mg/kg				mg/kg			
SEMIVOLATILE COMPOUNDS (GC/MS)			MDL	PQL			MDL	PQL			MDL	PQL
1,1'-Biphenyl	0.16	J	0.14	0.82	0.39	U	0.065	0.39	0.41	U	0.067	0.41
2,2'-oxybis[1-chloropropane]	0.82	U	0.11	0.82	0.39	U	0.052	0.39	0.41	U	0.054	0.41
2,4,5-Trichlorophenol	0.82	U	0.16	0.82	0.39	U	0.076	0.39	0.41	U	0.079	0.41
2,4,6-Trichlorophenol	0.82	U	0.15	0.82	0.39	U	0.071	0.39	0.41	U	0.073	0.41
2,4-Dichlorophenol	0.82	U	0.13	0.82	0.39	U	0.063	0.39	0.41	U	0.066	0.41
2,4-Dimethylphenol	0.82	U	0.13	0.82	0.39	U	0.063	0.39	0.41	U	0.066	0.41
2,4-Dinitrophenol	2.5	U	0.17	2.5	1.2	U	0.084	1.2	1.2	U	0.087	1.2
2,4-Dinitrotoluene	0.17	U	0.024	0.17	0.080	U	0.012	0.080	0.083	U	0.012	0.083
2,6-Dinitrotoluene	0.17	U	0.021	0.17	0.080	U	0.010	0.080	0.083	U	0.010	0.083
2-Chloronaphthalene	0.82	U	0.12	0.82	0.39	U	0.056	0.39	0.41	U	0.058	0.41
2-Chlorophenol	0.82	U	0.11	0.82	0.39	U	0.053	0.39	0.41	U	0.055	0.41
2-Methylnaphthalene	0.41	J	0.12	0.82	0.39	U	0.058	0.39	0.088	J	0.060	0.41
2-Methylphenol	0.82	U	0.12	0.82	0.39	U	0.057	0.39	0.41	U	0.059	0.41
2-Nitroaniline	1.7	U	0.22	1.7	0.80	U	0.11	0.80	0.83	U	0.11	0.83
2-Nitrophenol	0.82	U	0.13	0.82	0.39	U	0.065	0.39	0.41	U	0.067	0.41
3,3'-Dichlorobenzidine	1.7	U	0.18	1.7	0.80	U	0.087	0.80	0.83	U	0.091	0.83
3-Nitroaniline	1.7	U	0.19	1.7	0.80	U	0.089	0.80	0.83	U	0.093	0.83
4,6-Dinitro-2-methylphenol	2.5	U	0.39	2.5	1.2	U	0.19	1.2	1.2	U	0.20	1.2
4-Bromophenyl phenyl ether	0.82	U	0.15	0.82	0.39	U	0.070	0.39	0.41	U	0.073	0.41
4-Chloro-3-methylphenol	0.82	U	0.14	0.82	0.39	U	0.066	0.39	0.41	U	0.069	0.41
4-Chloroaniline	0.82	U	0.10	0.82	0.39	U	0.050	0.39	0.41	U	0.052	0.41
4-Chlorophenyl phenyl ether	0.82	U	0.14	0.82	0.39	U	0.068	0.39	0.41	U	0.070	0.41
4-Methylphenol	0.82	U	0.13	0.82	0.39	U	0.065	0.39	0.41	U	0.067	0.41
4-Nitroaniline	1.7	U	0.17	1.7	0.80	U	0.081	0.80	0.83	U	0.085	0.83
4-Nitrophenol	2.5	U	0.21	2.5	1.2	U	0.10	1.2	1.2	U	0.11	1.2

TestAmerica

SUMMARY OF ANALYTICAL RESULTS: 460-

Sample ID	NVF-SB-29A				NVF-SB-29B				NVF-SB-22A			
Lab Sample No.	460-6944-7				460-6944-8				460-6944-15			
Sampling Date	10/14/2009 2:50:00 PM				10/14/2009 2:50:00 PM				10/14/2009 4:05:00 PM			
Matrix	Solid				Solid				Solid			
Dilution Factor	2				1				1			
Units	mg/kg				mg/kg				mg/kg			
SEMIVOLATILE COMPOUNDS (GC/MS)			MDL	PQL			MDL	PQL			MDL	PQL
Acenaphthene	1.5		0.12	0.82	0.39	U	0.056	0.39	0.41	U	0.058	0.41
Acenaphthylene	0.82	U	0.12	0.82	0.39	U	0.056	0.39	0.41	U	0.059	0.41
Acetophenone	0.82	U	0.12	0.82	0.39	U	0.059	0.39	0.41	U	0.061	0.41
Anthracene	3.9		0.14	0.82	0.39	U	0.070	0.39	0.41	U	0.072	0.41
Atrazine	0.82	U	0.15	0.82	0.39	U	0.074	0.39	0.41	U	0.076	0.41
Benzaldehyde	0.82	U	0.051	0.82	0.39	U	0.025	0.39	0.41	U	0.026	0.41
Benzo[a]anthracene	6.3		0.015	0.082	0.068		0.0073	0.039	0.13		0.0076	0.041
Benzo[a]pyrene	4.7		0.010	0.082	0.042		0.0049	0.039	0.060		0.005	0.041
Benzo[b]fluoranthene	6.1		0.012	0.082	0.056		0.0059	0.039	0.15		0.0061	0.041
Benzo[g,h,i]perylene	2.3		0.087	0.82	0.39	U	0.042	0.39	0.055	J	0.043	0.41
Benzo[k]fluoranthene	2.3		0.011	0.082	0.039	U	0.0055	0.039	0.041	U	0.0057	0.041
Bis(2-chloroethoxy)methane	0.82	U	0.12	0.82	0.39	U	0.056	0.39	0.41	U	0.058	0.41
Bis(2-chloroethyl)ether	0.082	U	0.017	0.082	0.039	U	0.0082	0.039	0.041	U	0.0085	0.041
Bis(2-ethylhexyl) phthalate	0.82	U	0.11	0.82	0.39	U	0.052	0.39	0.41	U	0.054	0.41
Butyl benzyl phthalate	0.82	U	0.096	0.82	0.39	U	0.046	0.39	0.41	U	0.048	0.41
Caprolactam	0.82	U	0.11	0.82	0.39	U	0.054	0.39	0.41	U	0.056	0.41
Carbazole	2.1		0.13	0.82	0.39	U	0.063	0.39	0.41	U	0.065	0.41
Chrysene	6.2		0.12	0.82	0.069	J	0.057	0.39	0.23	J	0.060	0.41
Dibenz(a,h)anthracene	0.69		0.0099	0.082	0.039	U	0.0047	0.039	0.024	J	0.0049	0.041
Dibenzofuran	1.1		0.12	0.82	0.39	U	0.059	0.39	0.41	U	0.062	0.41
Diethyl phthalate	0.82	U	0.11	0.82	0.39	U	0.053	0.39	0.41	U	0.055	0.41
Dimethyl phthalate	0.82	U	0.11	0.82	0.39	U	0.053	0.39	0.41	U	0.055	0.41
Di-n-butyl phthalate	0.82	U	0.13	0.82	0.39	U	0.060	0.39	0.41	U	0.063	0.41
Di-n-octyl phthalate	0.82	U	0.097	0.82	0.39	U	0.047	0.39	0.41	U	0.049	0.41
Fluoranthene	12		0.14	0.82	0.16	J	0.066	0.39	0.21	J	0.068	0.41

TestAmerica

SUMMARY OF ANALYTICAL RESULTS: 460-

Sample ID	NVF-SB-29A				NVF-SB-29B				NVF-SB-22A			
Lab Sample No.	460-6944-7				460-6944-8				460-6944-15			
Sampling Date	10/14/2009 2:50:00 PM				10/14/2009 2:50:00 PM				10/14/2009 4:05:00 PM			
Matrix	Solid				Solid				Solid			
Dilution Factor	2				1				1			
Units	mg/kg				mg/kg				mg/kg			
SEMIVOLATILE COMPOUNDS (GC/MS)			MDL	PQL			MDL	PQL			MDL	PQL
Fluorene	2.1		0.14	0.82	0.39	U	0.067	0.39	0.41	U	0.069	0.41
Hexachlorobenzene	0.082	U	0.011	0.082	0.039	U	0.0055	0.039	0.041	U	0.0057	0.041
Hexachlorobutadiene	0.17	U	0.033	0.17	0.080	U	0.016	0.080	0.083	U	0.017	0.083
Hexachlorocyclopentadiene	0.82	U	0.24	0.82	0.39	U	0.12	0.39	0.41	U	0.12	0.41
Hexachloroethane	0.082	U	0.014	0.082	0.039	U	0.0067	0.039	0.041	U	0.0069	0.041
Indeno[1,2,3-cd]pyrene	2.4		0.013	0.082	0.024	J	0.0063	0.039	0.035	J	0.0066	0.041
Isophorone	0.82	U	0.094	0.82	0.39	U	0.045	0.39	0.41	U	0.047	0.41
Naphthalene	0.33	J	0.12	0.82	0.39	U	0.058	0.39	0.080	J	0.060	0.41
Nitrobenzene	0.082	U	0.018	0.082	0.039	U	0.0088	0.039	0.041	U	0.0092	0.041
N-Nitrosodi-n-propylamine	0.082	U	0.011	0.082	0.039	U	0.0052	0.039	0.041	U	0.0054	0.041
N-Nitrosodiphenylamine	0.82	U	0.13	0.82	0.39	U	0.064	0.39	0.41	U	0.067	0.41
Pentachlorophenol	2.5	U	0.40	2.5	1.2	U	0.19	1.2	1.2	U	0.20	1.2
Phenanthrene	11		0.14	0.82	0.39	U	0.069	0.39	0.41	U	0.071	0.41
Phenol	0.82	U	0.10	0.82	0.39	U	0.048	0.39	0.41	U	0.050	0.41
Pyrene	11		0.14	0.82	0.12	J	0.068	0.39	0.11	J	0.071	0.41
Total Confident Conc.	75.69				0.166				0.34			
Total Estimated Conc. (TICs)	13.81				0				0.063			

NR: Not analyzed.

U: Indicates the analyte was analyzed for but

Generated on 10/23/2009 11:52:36 AM

TestAmerica

SUMMARY OF ANALYTICAL RESULTS: 460-

Sample ID	NVF-SB-31C				NVF-SB-12A				NVF-SB-912A			
Lab Sample No.	460-6944-20				460-6944-36				460-6944-39			
Sampling Date	10/14/2009 12:20:00 PM				10/14/2009 8:40:00 AM				10/14/2009 8:40:00 AM			
Matrix	Solid				Solid				Solid			
Dilution Factor	1				1				1			
Units	mg/kg				mg/kg				mg/kg			
SEMIVOLATILE COMPOUNDS (GC/MS)			MDL	PQL			MDL	PQL			MDL	PQL
1,1'-Biphenyl	0.44	U	0.073	0.44	0.38	U	0.063	0.38	0.38	U	0.063	0.38
2,2'-oxybis[1-chloropropane]	0.44	U	0.058	0.44	0.38	U	0.050	0.38	0.38	U	0.050	0.38
2,4,5-Trichlorophenol	0.44	U	0.085	0.44	0.38	U	0.074	0.38	0.38	U	0.074	0.38
2,4,6-Trichlorophenol	0.44	U	0.079	0.44	0.38	U	0.069	0.38	0.38	U	0.068	0.38
2,4-Dichlorophenol	0.44	U	0.071	0.44	0.38	U	0.062	0.38	0.38	U	0.061	0.38
2,4-Dimethylphenol	0.44	U	0.071	0.44	0.38	U	0.062	0.38	0.38	U	0.061	0.38
2,4-Dinitrophenol	1.3	U	0.094	1.3	1.2	U	0.081	1.2	1.2	U	0.081	1.2
2,4-Dinitrotoluene	0.090	U	0.013	0.090	0.078	U	0.011	0.078	0.077	U	0.011	0.077
2,6-Dinitrotoluene	0.090	U	0.011	0.090	0.078	U	0.0098	0.078	0.077	U	0.0097	0.077
2-Chloronaphthalene	0.44	U	0.063	0.44	0.38	U	0.054	0.38	0.38	U	0.054	0.38
2-Chlorophenol	0.44	U	0.059	0.44	0.38	U	0.051	0.38	0.38	U	0.051	0.38
2-Methylnaphthalene	0.44	U	0.065	0.44	0.34	J	0.056	0.38	0.33	J	0.056	0.38
2-Methylphenol	0.44	U	0.064	0.44	0.38	U	0.055	0.38	0.38	U	0.055	0.38
2-Nitroaniline	0.90	U	0.12	0.90	0.78	U	0.11	0.78	0.77	U	0.10	0.77
2-Nitrophenol	0.44	U	0.073	0.44	0.38	U	0.063	0.38	0.38	U	0.063	0.38
3,3'-Dichlorobenzidine	0.90	U	0.098	0.90	0.78	U	0.085	0.78	0.77	U	0.084	0.77
3-Nitroaniline	0.90	U	0.10	0.90	0.78	U	0.087	0.78	0.77	U	0.086	0.77
4,6-Dinitro-2-methylphenol	1.3	U	0.21	1.3	1.2	U	0.18	1.2	1.2	U	0.18	1.2
4-Bromophenyl phenyl ether	0.44	U	0.079	0.44	0.38	U	0.068	0.38	0.38	U	0.068	0.38
4-Chloro-3-methylphenol	0.44	U	0.074	0.44	0.38	U	0.064	0.38	0.38	U	0.064	0.38
4-Chloroaniline	0.44	U	0.056	0.44	0.38	U	0.048	0.38	0.38	U	0.048	0.38
4-Chlorophenyl phenyl ether	0.44	U	0.076	0.44	0.38	U	0.066	0.38	0.38	U	0.066	0.38
4-Methylphenol	0.44	U	0.073	0.44	0.38	U	0.063	0.38	0.38	U	0.063	0.38
4-Nitroaniline	0.90	U	0.091	0.90	0.78	U	0.079	0.78	0.77	U	0.079	0.77
4-Nitrophenol	1.3	U	0.11	1.3	1.2	U	0.099	1.2	1.2	U	0.098	1.2

TestAmerica

SUMMARY OF ANALYTICAL RESULTS: 460-

Sample ID	NVF-SB-31C				NVF-SB-12A				NVF-SB-912A			
Lab Sample No.	460-6944-20				460-6944-36				460-6944-39			
Sampling Date	10/14/2009 12:20:00 PM				10/14/2009 8:40:00 AM				10/14/2009 8:40:00 AM			
Matrix	Solid				Solid				Solid			
Dilution Factor	1				1				1			
Units	mg/kg				mg/kg				mg/kg			
SEMIVOLATILE COMPOUNDS (GC/MS)			MDL	PQL			MDL	PQL			MDL	PQL
Acenaphthene	0.44	U	0.063	0.44	0.38	U	0.055	0.38	0.38	U	0.054	0.38
Acenaphthylene	0.44	U	0.063	0.44	0.38	U	0.055	0.38	0.38	U	0.055	0.38
Acetophenone	0.44	U	0.066	0.44	0.38	U	0.057	0.38	0.38	U	0.057	0.38
Anthracene	0.44	U	0.078	0.44	0.38	U	0.068	0.38	0.38	U	0.067	0.38
Atrazine	0.44	U	0.083	0.44	0.38	U	0.072	0.38	0.38	U	0.071	0.38
Benzaldehyde	0.44	U	0.028	0.44	0.38	U	0.024	0.38	0.38	U	0.024	0.38
Benzo[a]anthracene	0.044	U	0.0082	0.044	0.046		0.0071	0.038	0.038	U	0.0071	0.038
Benzo[a]pyrene	0.044	U	0.0055	0.044	0.036	J	0.0047	0.038	0.036	J	0.0047	0.038
Benzo[b]fluoranthene	0.044	U	0.0066	0.044	0.048		0.0057	0.038	0.044		0.0057	0.038
Benzo[g,h,i]perylene	0.44	U	0.047	0.44	0.38	U	0.040	0.38	0.38	U	0.040	0.38
Benzo[k]fluoranthene	0.044	U	0.0062	0.044	0.038	U	0.0054	0.038	0.038	U	0.0053	0.038
Bis(2-chloroethoxy)methane	0.44	U	0.063	0.44	0.38	U	0.055	0.38	0.38	U	0.054	0.38
Bis(2-chloroethyl)ether	0.044	U	0.0092	0.044	0.038	U	0.008	0.038	0.038	U	0.008	0.038
Bis(2-ethylhexyl) phthalate	0.44	U	0.059	0.44	0.38	U	0.051	0.38	0.38	U	0.051	0.38
Butyl benzyl phthalate	0.44	U	0.052	0.44	0.38	U	0.045	0.38	0.38	U	0.045	0.38
Caprolactam	0.44	U	0.061	0.44	0.38	U	0.053	0.38	0.38	U	0.052	0.38
Carbazole	0.44	U	0.070	0.44	0.38	U	0.061	0.38	0.38	U	0.061	0.38
Chrysene	0.44	U	0.064	0.44	0.079	J	0.056	0.38	0.069	J	0.056	0.38
Dibenz(a,h)anthracene	0.044	U	0.0053	0.044	0.038	U	0.0046	0.038	0.038	U	0.0046	0.038
Dibenzofuran	0.44	U	0.067	0.44	0.088	J	0.058	0.38	0.077	J	0.057	0.38
Diethyl phthalate	0.44	U	0.059	0.44	0.38	U	0.052	0.38	0.38	U	0.051	0.38
Dimethyl phthalate	0.44	U	0.060	0.44	0.38	U	0.052	0.38	0.38	U	0.052	0.38
Di-n-butyl phthalate	0.44	U	0.068	0.44	0.38	U	0.059	0.38	0.38	U	0.058	0.38
Di-n-octyl phthalate	0.44	U	0.053	0.44	0.38	U	0.046	0.38	0.38	U	0.045	0.38
Fluoranthene	0.44	U	0.074	0.44	0.38	U	0.064	0.38	0.38	U	0.063	0.38

TestAmerica

SUMMARY OF ANALYTICAL RESULTS: 460-

Sample ID	NVF-SB-31C				NVF-SB-12A				NVF-SB-912A			
Lab Sample No.	460-6944-20				460-6944-36				460-6944-39			
Sampling Date	10/14/2009 12:20:00 PM				10/14/2009 8:40:00 AM				10/14/2009 8:40:00 AM			
Matrix	Solid				Solid				Solid			
Dilution Factor	1				1				1			
Units	mg/kg				mg/kg				mg/kg			
SEMIVOLATILE COMPOUNDS (GC/MS)			MDL	PQL			MDL	PQL			MDL	PQL
Fluorene	0.44	U	0.075	0.44	0.38	U	0.065	0.38	0.38	U	0.065	0.38
Hexachlorobenzene	0.044	U	0.0061	0.044	0.038	U	0.0053	0.038	0.038	U	0.0053	0.038
Hexachlorobutadiene	0.090	U	0.018	0.090	0.078	U	0.016	0.078	0.077	U	0.015	0.077
Hexachlorocyclopentadiene	0.44	U	0.13	0.44	0.38	U	0.11	0.38	0.38	U	0.11	0.38
Hexachloroethane	0.044	U	0.0075	0.044	0.038	U	0.0065	0.038	0.038	U	0.0064	0.038
Indeno[1,2,3-cd]pyrene	0.044	U	0.0071	0.044	0.038	U	0.0061	0.038	0.038	U	0.0061	0.038
Isophorone	0.44	U	0.051	0.44	0.38	U	0.044	0.38	0.38	U	0.044	0.38
Naphthalene	0.44	U	0.065	0.44	0.24	J	0.056	0.38	0.21	J	0.056	0.38
Nitrobenzene	0.044	U	0.0099	0.044	0.038	U	0.0086	0.038	0.038	U	0.0085	0.038
N-Nitrosodi-n-propylamine	0.044	U	0.0059	0.044	0.038	U	0.0051	0.038	0.038	U	0.005	0.038
N-Nitrosodiphenylamine	0.44	U	0.072	0.44	0.38	U	0.063	0.38	0.38	U	0.062	0.38
Pentachlorophenol	1.3	U	0.22	1.3	1.2	U	0.19	1.2	1.2	U	0.19	1.2
Phenanthrene	0.44	U	0.077	0.44	0.15	J	0.067	0.38	0.18	J	0.067	0.38
Phenol	0.44	U	0.054	0.44	0.38	U	0.047	0.38	0.38	U	0.047	0.38
Pyrene	0.44	U	0.077	0.44	0.38	U	0.066	0.38	0.38	U	0.066	0.38
Total Confident Conc.	0				0.094				0.044			
Total Estimated Conc. (TICs)	4.41				0.25				0.23			

NR: Not analyzed.

U: Indicates the analyte was analyzed for but

Generated on 10/23/2009 11:52:36 AM

TestAmerica

SUMMARY OF ANALYTICAL RESULTS: 460-6944-1

Sample ID	NVF-SB-12A				NVF-SB-912A			
Lab Sample No.	460-6944-36				460-6944-39			
Sampling Date	10/14/2009 8:40:00 AM				10/14/2009 8:40:00 AM			
Matrix	Solid				Solid			
Dilution Factor	1				1			
Units	mg/kg				mg/kg			
PESTICIDES/PCBs			MDL	PQL			MDL	PQL
4,4'-DDD	0.0018	J p	0.00093	0.0078	0.0021	J p	0.00093	0.0077
4,4'-DDE	0.0078	U	0.0015	0.0078	0.0077	U	0.0015	0.0077
4,4'-DDT	0.0078	U	0.00097	0.0078	0.0077	U	0.00097	0.0077
Aldrin	0.0078	U	0.0017	0.0078	0.0077	U	0.0017	0.0077
alpha-BHC	0.0078	U	0.0014	0.0078	0.0077	U	0.0014	0.0077
alpha-Chlordane	0.0078	U	0.0016	0.0078	0.0077	U	0.0016	0.0077
beta-BHC	0.0078	U	0.0011	0.0078	0.0077	U	0.0011	0.0077
delta-BHC	0.0078	U	0.0012	0.0078	0.0077	U	0.0012	0.0077
Dieldrin	0.0078	U	0.0015	0.0078	0.0077	U	0.0015	0.0077
Endosulfan I	0.0078	U	0.0016	0.0078	0.0077	U	0.0016	0.0077
Endosulfan II	0.0078	U	0.0012	0.0078	0.0077	U	0.0012	0.0077
Endosulfan sulfate	0.0078	U	0.001	0.0078	0.0077	U	0.00099	0.0077
Endrin	0.0078	U	0.0011	0.0078	0.0077	U	0.0011	0.0077
Endrin aldehyde	0.0078	U	0.0019	0.0078	0.0077	U	0.0019	0.0077
Endrin ketone	0.0078	U	0.0011	0.0078	0.0077	U	0.0011	0.0077
gamma-BHC (Lindane)	0.0078	U	0.00090	0.0078	0.0077	U	0.00090	0.0077
gamma-Chlordane	0.0078	U	0.0016	0.0078	0.0077	U	0.0016	0.0077
Heptachlor	0.0078	U	0.0011	0.0078	0.0077	U	0.0011	0.0077
Heptachlor epoxide	0.0078	U	0.0016	0.0078	0.0077	U	0.0016	0.0077
Methoxychlor	0.0078	U	0.00087	0.0078	0.0077	U	0.00087	0.0077
Toxaphene	0.078	U	0.016	0.078	0.077	U	0.016	0.077

SUMMARY OF ANALYTICAL RESULTS: 460-6944-1

Sample ID	NVF-SB-12A				NVF-SB-912A			
Lab Sample No.	460-6944-36				460-6944-39			
Sampling Date	10/14/2009 8:40:00 AM				10/14/2009 8:40:00 AM			
Matrix	Solid				Solid			
Dilution Factor	1				1			
Units	mg/kg				mg/kg			
PESTICIDES/PCBs			MDL	PQL			MDL	PQL

NR: Not analyzed.

J: Result is less than the RL but greater than or equal to the MDL and the concentration is an approximate value.

p: The %RPD between the primary and confirmation column/detector is >40%. The lower value has been reported.

U: Indicates the analyte was analyzed for but not detected.

Generated on 10/23/2009 11:52:37 AM

SUMMARY OF ANALYTICAL RESULTS: 460-6944-1

Sample ID	NVF-SB-12A				NVF-SB-912A			
Lab Sample No.	460-6944-36				460-6944-39			
Sampling Date	10/14/2009 8:40:00 AM				10/14/2009 8:40:00 AM			
Matrix	Solid				Solid			
Dilution Factor	1				1			
Units	mg/kg				mg/kg			
PESTICIDES/PCBs			MDL	PQL			MDL	PQL
PCB-1016	0.078	U	0.015	0.078	0.077	U	0.015	0.077
PCB-1221	0.078	U	0.023	0.078	0.077	U	0.023	0.077
PCB-1232	0.078	U	0.044	0.078	0.077	U	0.044	0.077
PCB-1242	0.078	U	0.015	0.078	0.077	U	0.015	0.077
PCB-1248	0.078	U	0.021	0.078	0.077	U	0.021	0.077
PCB-1254	0.078	U	0.027	0.078	0.077	U	0.026	0.077
PCB-1260	0.079		0.0087	0.078	0.077	U	0.0086	0.077

NR: Not analyzed.

U: Indicates the analyte was analyzed for but not detected.

Generated on 10/23/2009 11:52:37 AM

TestAmerica

SUMMARY OF ANALYTICAL RESULTS: 460-6944-1

Sample ID	NVF-SB-9A				NVF-SB-26B				NVF-SB-22A				NVF-SB-9B	
Lab Sample No.	460-6944-1				460-6944-10				460-6944-15				460-6944-2	
Sampling Date	10/14/2009 1:35:00 PM				10/14/2009 3:15:00 PM				10/14/2009 4:05:00 PM				10/14/2009 1:35:00 PM	
Matrix	Solid				Solid				Solid				Solid	
Dilution Factor														
Units	mg/Kg				mg/Kg				mg/Kg				mg/Kg	
METALS			MDL	PQL			MDL	PQL			MDL	PQL		
Aluminum	17400		17.0	46.4	19700		18.5	50.4	25800		18.0	49.1	20600	
Antimony	2.3	U	1.0	2.3	2.5	U	1.1	2.5	2.5	U	1.1	2.5	2.4	U
Arsenic	1.8		0.81	1.2	3.5		0.88	1.3	4.4		0.85	1.2	3.6	
Barium	146		1.4	46.4	136		1.5	50.4	184		1.5	49.1	187	
Beryllium	0.68		0.20	0.46	0.76		0.22	0.50	1.1		0.22	0.49	0.90	
Cadmium	0.33	J	0.18	1.2	0.30	J	0.20	1.3	1.2	U	0.19	1.2	1.9	
Calcium	6040		30.5	1160	1950		33.1	1260	2240		32.3	1230	5790	
Chromium	40.9		1.4	2.3	43.9		1.5	2.5	50.1		1.5	2.5	47.3	
Cobalt	10.8	J	1.4	11.6	13.7		1.5	12.6	17.6		1.5	12.3	11.6	J
Copper	78.5		0.95	5.8	23.4		1.0	6.3	53.8		1.0	6.1	102	
Iron	24200		12.3	34.8	24800		13.4	37.8	39400		13.0	36.8	26800	
Lead	49.4		0.58	1.2	74.8		0.63	1.3	167		0.61	1.2	84.6	
Magnesium	6600		12.3	1160	4590		13.3	1260	4620		13.0	1230	6330	
Manganese	357		1.3	3.5	171		1.4	3.8	609		1.4	3.7	230	
Mercury	0.055		0.027	0.034	0.031	J	0.030	0.038	0.031	J	0.028	0.036	0.18	
Nickel	20.9		0.62	9.3	24.6		0.68	10.1	25.6		0.66	9.8	22.8	
Potassium	2440		52.4	1160	3880		56.9	1260	3340		55.4	1230	2330	
Selenium	2.3	U	1.1	2.3	2.5	U	1.2	2.5	1.4	J	1.1	2.5	2.4	U
Silver	2.3	U	0.18	2.3	2.5	U	0.19	2.5	2.5	U	0.19	2.5	2.4	U
Sodium	1160	U	71.2	1160	1260	U	77.4	1260	1230	U	75.3	1230	1180	U
Thallium	2.3	U	1.1	2.3	2.5	U	1.2	2.5	2.5	U	1.2	2.5	2.4	U
Vanadium	48.7		0.60	11.6	54.2		0.66	12.6	79.2		0.64	12.3	55.0	

SUMMARY OF ANALYTICAL RESULTS: 460-6944-1

Sample ID	NVF-SB-9A				NVF-SB-26B				NVF-SB-22A				NVF-SB-9B	
Lab Sample No.	460-6944-1				460-6944-10				460-6944-15				460-6944-2	
Sampling Date	10/14/2009 1:35:00 PM				10/14/2009 3:15:00 PM				10/14/2009 4:05:00 PM				10/14/2009 1:35:00 PM	
Matrix	Solid				Solid				Solid				Solid	
Dilution Factor														
Units	mg/Kg				mg/Kg				mg/Kg				mg/Kg	
METALS			MDL	PQL			MDL	PQL			MDL	PQL		
Zinc	1550		1.1	7.0	220		1.2	7.6	450		1.2	7.4	3160	

NR: Not analyzed.

J: Result is less than the RL but greater than or equal to the MDL and the concentration is an approximate value.

U: Indicates the analyte was analyzed for but not detected.

Generated on 10/23/2009 11:52:38 AM

TestAmerica

SUMMARY OF ANALYTICA

Sample ID			NVF-SB-31C				NVF-SB-32A				NVF-SB-32B			
Lab Sample No.			460-6944-20				460-6944-21				460-6944-22			
Sampling Date			10/14/2009 12:20:00 PM				10/14/2009 12:00:00 PM				10/14/2009 12:00:00 PM			
Matrix			Solid				Solid				Solid			
Dilution Factor														
Units			mg/Kg				mg/Kg				mg/Kg			
METALS	MDL	PQL			MDL	PQL			MDL	PQL			MDL	PQL
Aluminum	17.2	47.0	16500		19.4	53.1	33700		17.3	47.2	30000		16.8	45.8
Antimony	1.0	2.4	2.7	U	1.2	2.7	12.7		1.0	2.4	2.3	U	1.0	2.3
Arsenic	0.82	1.2	3.6		0.92	1.3	8.6		0.82	1.2	4.7		0.80	1.1
Barium	1.4	47.0	118		1.6	53.1	231		1.4	47.2	219		1.4	45.8
Beryllium	0.21	0.47	0.65		0.23	0.53	1.2		0.21	0.47	1.0		0.20	0.46
Cadmium	0.18	1.2	1.1	J	0.21	1.3	1.2	U	0.18	1.2	1.1	U	0.18	1.1
Calcium	30.9	1180	1420		34.9	1330	1730		31.0	1180	1330		30.1	1140
Chromium	1.4	2.4	34.8		1.6	2.7	70.4		1.4	2.4	57.9		1.4	2.3
Cobalt	1.4	11.8	14.6		1.6	13.3	20.6		1.4	11.8	21.4		1.4	11.4
Copper	0.96	5.9	23.4		1.1	6.6	145		0.96	5.9	59.3		0.93	5.7
Iron	12.5	35.3	17600		14.1	39.8	49000		31.3	88.4	41800		12.1	34.3
Lead	0.59	1.2	9.6		0.66	1.3	516		0.59	1.2	53.5		0.57	1.1
Magnesium	12.4	1180	6160		14.0	1330	6710		12.5	1180	6800		12.1	1140
Manganese	1.3	3.5	111		1.5	4.0	443		1.3	3.5	493		1.3	3.4
Mercury	0.031	0.039	0.040	U	0.032	0.040	0.044		0.029	0.036	0.038	U	0.030	0.038
Nickel	0.63	9.4	22.7		0.71	10.6	32.8		0.63	9.4	31.1		0.61	9.2
Potassium	53.1	1180	3540		59.9	1330	5700		53.2	1180	6540		51.6	1140
Selenium	1.1	2.4	2.7	U	1.2	2.7	2.4	U	1.1	2.4	2.3	U	1.1	2.3
Silver	0.18	2.4	2.7	U	0.20	2.7	0.52	J	0.18	2.4	2.3	U	0.17	2.3
Sodium	72.2	1180	1330	U	81.5	1330	1180	U	72.4	1180	1140	U	70.2	1140
Thallium	1.1	2.4	2.7	U	1.3	2.7	2.4	U	1.1	2.4	2.3	U	1.1	2.3
Vanadium	0.61	11.8	52.3		0.69	13.3	102		0.61	11.8	85.7		0.59	11.4

TestAmerica

SUMMARY OF ANALYTICA

Sample ID			NVF-SB-31C				NVF-SB-32A				NVF-SB-32B			
Lab Sample No.			460-6944-20				460-6944-21				460-6944-22			
Sampling Date			10/14/2009 12:20:00 PM				10/14/2009 12:00:00 PM				10/14/2009 12:00:00 PM			
Matrix			Solid				Solid				Solid			
Dilution Factor														
Units			mg/Kg				mg/Kg				mg/Kg			
METALS	MDL	PQL			MDL	PQL			MDL	PQL			MDL	PQL
Zinc	1.2	7.1	2980		1.3	8.0	1720		1.2	7.1	883		1.1	6.9

NR: Not analyzed.

J: Result is less than the R

U: Indicates the analyte wa

Generated on 10/23/2009 11

TestAmerica

SUMMARY OF ANALYTICA

Sample ID	NVF-SB-32C				NVF-SB-34A				NVF-SB-34B			
Lab Sample No.	460-6944-23				460-6944-27				460-6944-28			
Sampling Date	10/14/2009 12:00:00 PM				10/14/2009 10:40:00 AM				10/14/2009 10:40:00 AM			
Matrix	Solid				Solid				Solid			
Dilution Factor												
Units	mg/Kg				mg/Kg				mg/Kg			
METALS			MDL	PQL			MDL	PQL			MDL	PQL
Aluminum	21700		16.6	45.2	31100		17.8	48.6	23600		17.8	48.5
Antimony	2.3	U	1.0	2.3	2.4	U	1.1	2.4	2.4	U	1.1	2.4
Arsenic	2.8		0.79	1.1	11.3		0.85	1.2	4.8		0.84	1.2
Barium	137		1.4	45.2	269		1.5	48.6	180		1.5	48.5
Beryllium	0.74		0.20	0.45	0.93		0.21	0.49	0.55		0.21	0.49
Cadmium	1.1	U	0.18	1.1	1.2	U	0.19	1.2	1.2	U	0.19	1.2
Calcium	1500		29.7	1130	843	J	32.0	1220	879	J	31.9	1210
Chromium	47.0		1.3	2.3	60.7		1.4	2.4	49.6		1.4	2.4
Cobalt	18.1		1.4	11.3	20.2		1.5	12.2	11.2	J	1.5	12.1
Copper	39.1		0.92	5.7	63.1		0.99	6.1	25.2		0.99	6.1
Iron	33700		12.0	33.9	54700		32.3	91.2	41600		12.9	36.4
Lead	15.3		0.57	1.1	20.5		0.61	1.2	9.2		0.61	1.2
Magnesium	5310		12.0	1130	6330		12.9	1220	5380		12.8	1210
Manganese	326		1.3	3.4	496		1.4	3.6	124		1.4	3.6
Mercury	0.035	U	0.028	0.035	0.087		0.030	0.038	0.038	U	0.030	0.038
Nickel	25.7		0.61	9.0	34.3		0.65	9.7	23.6		0.65	9.7
Potassium	4680		51.0	1130	5070		54.9	1220	4460		54.7	1210
Selenium	2.3	U	1.1	2.3	2.4	U	1.1	2.4	2.4	U	1.1	2.4
Silver	2.3	U	0.17	2.3	2.4	U	0.18	2.4	2.4	U	0.18	2.4
Sodium	1130	U	69.4	1130	1220	U	74.7	1220	1210	U	74.5	1210
Thallium	2.3	U	1.1	2.3	2.4	U	1.2	2.4	2.4	U	1.2	2.4
Vanadium	73.1		0.59	11.3	94.6		0.63	12.2	71.5		0.63	12.1

TestAmerica

SUMMARY OF ANALYTICA

Sample ID	NVF-SB-32C				NVF-SB-34A				NVF-SB-34B			
Lab Sample No.	460-6944-23				460-6944-27				460-6944-28			
Sampling Date	10/14/2009 12:00:00 PM				10/14/2009 10:40:00 AM				10/14/2009 10:40:00 AM			
Matrix	Solid				Solid				Solid			
Dilution Factor												
Units	mg/Kg				mg/Kg				mg/Kg			
METALS			MDL	PQL			MDL	PQL			MDL	PQL
Zinc	243		1.1	6.8	105		1.2	7.3	732		1.2	7.3

NR: Not analyzed.

J: Result is less than the R

U: Indicates the analyte wa

Generated on 10/23/2009 11

TestAmerica

SUMMARY OF ANALYTICA

Sample ID	NVF-SB-34C				NVF-SB-9C				NVF-SB-35A			
Lab Sample No.	460-6944-29				460-6944-3				460-6944-30			
Sampling Date	10/14/2009 10:40:00 AM				10/14/2009 1:35:00 PM				10/14/2009 11:00:00 AM			
Matrix	Solid				Solid				Solid			
Dilution Factor												
Units	mg/Kg				mg/Kg				mg/Kg			
METALS			MDL	PQL			MDL	PQL			MDL	PQL
Aluminum	27500		16.6	45.3	20200		17.8	48.5	15700		16.3	44.6
Antimony	2.3	U	1.0	2.3	2.4	U	1.1	2.4	2.2	U	0.98	2.2
Arsenic	1.9		0.79	1.1	3.3		0.84	1.2	26.1		0.78	1.1
Barium	220		1.4	45.3	191		1.5	48.5	271		1.3	44.6
Beryllium	0.86		0.20	0.45	0.85		0.21	0.49	0.61		0.20	0.45
Cadmium	1.1	U	0.18	1.1	1.0	J	0.19	1.2	1.7		0.17	1.1
Calcium	596	J	29.8	1130	7750		31.9	1210	19100		29.3	1120
Chromium	54.4		1.3	2.3	46.3		1.4	2.4	160		1.3	2.2
Cobalt	19.2		1.4	11.3	12.6		1.5	12.1	12.8		1.4	11.2
Copper	29.7		0.92	5.7	99.3		0.99	6.1	88.2		0.91	5.6
Iron	35900		12.0	34.0	27000		12.9	36.4	33200		11.8	33.5
Lead	7.0		0.57	1.1	93.9		0.61	1.2	129		0.56	1.1
Magnesium	6070		12.0	1130	7670		12.8	1210	6160		11.8	1120
Manganese	425		1.3	3.4	298		1.4	3.6	2670		3.1	8.4
Mercury	0.039	U	0.030	0.039	0.37		0.032	0.040	0.078		0.026	0.033
Nickel	24.7		0.61	9.1	22.7		0.65	9.7	26.0		0.60	8.9
Potassium	6270		51.2	1130	2400		54.8	1210	3550		50.3	1120
Selenium	2.3	U	1.1	2.3	2.4	U	1.1	2.4	2.2	U	1.0	2.2
Silver	2.3	U	0.17	2.3	2.4	U	0.18	2.4	2.2	U	0.17	2.2
Sodium	1130	U	69.6	1130	1210	U	74.5	1210	270	J	68.5	1120
Thallium	2.3	U	1.1	2.3	2.4	U	1.2	2.4	2.2	U	1.1	2.2
Vanadium	77.0		0.59	11.3	55.4		0.63	12.1	64.0		0.58	11.2

TestAmerica

SUMMARY OF ANALYTICA

Sample ID	NVF-SB-34C				NVF-SB-9C				NVF-SB-35A			
Lab Sample No.	460-6944-29				460-6944-3				460-6944-30			
Sampling Date	10/14/2009 10:40:00 AM				10/14/2009 1:35:00 PM				10/14/2009 11:00:00 AM			
Matrix	Solid				Solid				Solid			
Dilution Factor												
Units	mg/Kg				mg/Kg				mg/Kg			
METALS			MDL	PQL			MDL	PQL			MDL	PQL
Zinc	215		1.1	6.8	2820		1.2	7.3	1920		1.1	6.7

NR: Not analyzed.

J: Result is less than the R

U: Indicates the analyte wa

Generated on 10/23/2009 11

TestAmerica

SUMMARY OF ANALYTICA

Sample ID	NVF-SB-12A				NVF-SB-12B				NVF-SB-12C				NVF-SB-912A
Lab Sample No.	460-6944-36				460-6944-37				460-6944-38				460-6944-39
Sampling Date	10/14/2009 8:40:00 AM				10/14/2009 8:40:00 AM				10/14/2009 8:40:00 AM				10/14/2009 8:40:00 AM
Matrix	Solid				Solid				Solid				Solid
Dilution Factor													
Units	mg/Kg				mg/Kg				mg/Kg				mg/Kg
METALS			MDL	PQL			MDL	PQL			MDL	PQL	
Aluminum	9730		16.5	45.1	25400		17.7	48.3	21100		18.0	49.2	10000
Antimony	2.3	U	0.99	2.3	2.4	U	1.1	2.4	2.5	U	1.1	2.5	2.2
Arsenic	10.7		0.79	1.1	14.8		0.84	1.2	2.3		0.86	1.2	9.2
Barium	133		1.4	45.1	145		1.5	48.3	120		1.5	49.2	127
Beryllium	0.50		0.20	0.45	1.1		0.21	0.48	0.90		0.22	0.49	0.55
Cadmium	1.1	U	0.18	1.1	1.2	U	0.19	1.2	1.2	U	0.19	1.2	1.1
Calcium	14100		29.7	1130	2650		31.7	1210	1980		32.4	1230	14800
Chromium	16.9		1.3	2.3	42.6		1.4	2.4	42.7		1.5	2.5	18.7
Cobalt	8.3	J	1.4	11.3	12.3		1.5	12.1	11.9	J	1.5	12.3	9.3
Copper	25.1		0.92	5.6	37.9		0.98	6.0	28.9		1.0	6.2	22.7
Iron	22500		12.0	33.8	52300		32.0	90.5	23400		13.1	36.9	31500
Lead	16.0		0.56	1.1	13.5		0.60	1.2	8.7		0.62	1.2	13.1
Magnesium	4930		11.9	1130	2930		12.8	1210	4700		13.0	1230	4180
Manganese	159		1.3	3.4	169		1.4	3.6	145		1.4	3.7	187
Mercury	0.038	J	0.030	0.038	0.040	U	0.031	0.040	0.041	U	0.032	0.041	0.039
Nickel	25.3		0.60	9.0	27.9		0.65	9.7	25.8		0.66	9.8	26.3
Potassium	981	J	50.9	1130	1120	J	54.4	1210	2570		55.5	1230	848
Selenium	2.3	U	1.1	2.3	2.4	U	1.1	2.4	2.5	U	1.2	2.5	2.2
Silver	2.3	U	0.17	2.3	2.4	U	0.18	2.4	2.5	U	0.19	2.5	2.2
Sodium	181	J	69.3	1130	102	J	74.1	1210	114	J	75.6	1230	205
Thallium	2.3	U	1.1	2.3	2.4	U	1.2	2.4	2.5	U	1.2	2.5	2.2
Vanadium	30.0		0.59	11.3	91.0		0.63	12.1	60.0		0.64	12.3	28.0

TestAmerica

SUMMARY OF ANALYTICA

Sample ID	NVF-SB-12A				NVF-SB-12B				NVF-SB-12C				NVF-SB-912A
Lab Sample No.	460-6944-36				460-6944-37				460-6944-38				460-6944-39
Sampling Date	10/14/2009 8:40:00 AM				10/14/2009 8:40:00 AM				10/14/2009 8:40:00 AM				10/14/2009 8:40:00 AM
Matrix	Solid				Solid				Solid				Solid
Dilution Factor													
Units	mg/Kg				mg/Kg				mg/Kg				mg/Kg
METALS			MDL	PQL			MDL	PQL			MDL	PQL	
Zinc	409		1.1	6.8	69.9		1.2	7.2	63.6		1.2	7.4	366

NR: Not analyzed.

J: Result is less than the R

U: Indicates the analyte wa

Generated on 10/23/2009 11

TestAmerica

SUMMARY OF ANALYTICA

Sample ID				NVF-SB-29A				NVF-SB-29B				NVF-SB-26A			
Lab Sample No.				460-6944-7				460-6944-8				460-6944-9			
Sampling Date				10/14/2009 2:50:00 PM				10/14/2009 2:50:00 PM				10/14/2009 3:15:00 PM			
Matrix				Solid				Solid				Solid			
Dilution Factor															
Units				mg/Kg				mg/Kg				mg/Kg			
METALS		MDL	PQL			MDL	PQL			MDL	PQL			MDL	PQL
Aluminum		16.0	43.6	18500		17.3	47.3	12600		16.7	45.4	14600		19.5	53.1
Antimony	U	0.96	2.2	2.4	U	1.0	2.4	2.3	U	1.0	2.3	2.7	U	1.2	2.7
Arsenic		0.76	1.1	2.8		0.82	1.2	1.2		0.79	1.1	10.1		0.92	1.3
Barium		1.3	43.6	149		1.4	47.3	100		1.4	45.4	165		1.6	53.1
Beryllium		0.19	0.44	0.64		0.21	0.47	0.48		0.20	0.45	0.61		0.23	0.53
Cadmium	U	0.17	1.1	1.2	U	0.18	1.2	1.1	U	0.18	1.1	0.64	J	0.21	1.3
Calcium		28.7	1090	1950		31.1	1180	2380		29.9	1140	4130		34.9	1330
Chromium		1.3	2.2	39.3		1.4	2.4	28.1		1.3	2.3	25.7		1.6	2.7
Cobalt	J	1.3	10.9	13.7		1.5	11.8	10.6	J	1.4	11.4	11.6	J	1.6	13.3
Copper		0.89	5.5	201		0.97	5.9	57.9		0.93	5.7	43.6		1.1	6.6
Iron		11.6	32.7	28700		12.6	35.5	25000		12.1	34.1	29600		14.1	39.8
Lead		0.55	1.1	55.4		0.59	1.2	13.7		0.57	1.1	1070		0.66	1.3
Magnesium		11.5	1090	5100		12.5	1180	3620		12.0	1140	2620		14.1	1330
Manganese		1.2	3.3	325		1.3	3.6	350		1.3	3.4	245		1.5	4.0
Mercury		0.028	0.035	0.44		0.031	0.040	0.042		0.030	0.038	0.058		0.035	0.045
Nickel		0.58	8.7	24.4		0.63	9.5	16.2		0.61	9.1	21.9		0.71	10.6
Potassium	J	49.2	1090	3230		53.4	1180	2610		51.3	1140	1720		59.9	1330
Selenium	U	1.0	2.2	2.4	U	1.1	2.4	2.3	U	1.1	2.3	2.7	U	1.2	2.7
Silver	U	0.17	2.2	2.4	U	0.18	2.4	2.3	U	0.17	2.3	2.7	U	0.20	2.7
Sodium	J	67.0	1090	1180	U	72.7	1180	1140	U	69.8	1140	123	J	81.6	1330
Thallium	U	1.1	2.2	2.4	U	1.1	2.4	2.3	U	1.1	2.3	2.7	U	1.3	2.7
Vanadium		0.57	10.9	60.1		0.62	11.8	41.8		0.59	11.4	48.5		0.69	13.3

TestAmerica

SUMMARY OF ANALYTICA

Sample ID				NVF-SB-29A				NVF-SB-29B				NVF-SB-26A			
Lab Sample No.				460-6944-7				460-6944-8				460-6944-9			
Sampling Date				10/14/2009 2:50:00 PM				10/14/2009 2:50:00 PM				10/14/2009 3:15:00 PM			
Matrix				Solid				Solid				Solid			
Dilution Factor															
Units				mg/Kg				mg/Kg				mg/Kg			
METALS		MDL	PQL			MDL	PQL			MDL	PQL			MDL	PQL
Zinc		1.1	6.5	3920		2.9	17.8	295		1.1	6.8	355		1.3	8.0

NR: Not analyzed.

J: Result is less than the R

U: Indicates the analyte wa

Generated on 10/23/2009 11

TestAmerica

SUMMARY OF ANALYTICAL RESULTS: 460-6944-1

Sample ID	NVF-SB-9A				NVF-SB-26B				NVF-SB-27A			
Lab Sample No.	460-6944-1				460-6944-10				460-6944-11			
Sampling Date	10/14/2009 1:35:00 PM				10/14/2009 3:15:00 PM				10/14/2009 3:30:00 PM			
Matrix	Solid				Solid				Solid			
Dilution Factor												
Units												
WET CHEMISTRY			MDL	PQL			MDL	PQL			MDL	PQL
Percent Moisture (%)	13.8		1.0	1.0	22.2		1.0	1.0	16.8		1.0	1.0
Percent Solids (%)	86.2		1.0	1.0	77.8		1.0	1.0	83.2		1.0	1.0
Cyanide, Total (mg/Kg)	NR				NR				NR			

NR: Not analyzed.

J: Result is less than the RL but greater than or equal to the MDL and the concentration is an approximate value.

Generated on 10/23/2009 11:52:38 AM

TestAmerica

SUMMARY OF ANALYTICAL RESULTS: 460-

Sample ID	NVF-SB-27B				NVF-SB-23A				NVF-SB-23B			
Lab Sample No.	460-6944-12				460-6944-13				460-6944-14			
Sampling Date	10/14/2009 3:30:00 PM				10/14/2009 3:45:00 PM				10/14/2009 3:45:00 PM			
Matrix	Solid				Solid				Solid			
Dilution Factor												
Units												
WET CHEMISTRY			MDL	PQL			MDL	PQL			MDL	PQL
Percent Moisture (%)	20.0		1.0	1.0	20.2		1.0	1.0	18.1		1.0	1.0
Percent Solids (%)	80.0		1.0	1.0	79.8		1.0	1.0	81.9		1.0	1.0
Cyanide, Total (mg/Kg)	NR				NR				NR			

NR: Not analyzed.

J: Result is less than the RL but greater than

Generated on 10/23/2009 11:52:38 AM

TestAmerica

SUMMARY OF ANALYTICAL RESULTS: 460-

Sample ID	NVF-SB-22A				NVF-SB-22B				NVF-SB-20A			
Lab Sample No.	460-6944-15				460-6944-16				460-6944-17			
Sampling Date	10/14/2009 4:05:00 PM				10/14/2009 3:06:00 PM				10/14/2009 4:30:00 PM			
Matrix	Solid				Solid				Solid			
Dilution Factor												
Units												
WET CHEMISTRY			MDL	PQL			MDL	PQL			MDL	PQL
Percent Moisture (%)	19.3		1.0	1.0	18.6		1.0	1.0	11.0		1.0	1.0
Percent Solids (%)	80.7		1.0	1.0	81.4		1.0	1.0	89.0		1.0	1.0
Cyanide, Total (mg/Kg)	NR				NR				NR			

NR: Not analyzed.

J: Result is less than the RL but greater than

Generated on 10/23/2009 11:52:38 AM

TestAmerica

SUMMARY OF ANALYTICAL RESULTS: 460-

Sample ID	NVF-SB-31A				NVF-SB-31B				NVF-SB-9B			
Lab Sample No.	460-6944-18				460-6944-19				460-6944-2			
Sampling Date	10/14/2009 12:20:00 PM				10/14/2009 12:20:00 PM				10/14/2009 1:35:00 PM			
Matrix	Solid				Solid				Solid			
Dilution Factor												
Units												
WET CHEMISTRY			MDL	PQL			MDL	PQL			MDL	PQL
Percent Moisture (%)	22.0		1.0	1.0	19.9		1.0	1.0	17.4		1.0	1.0
Percent Solids (%)	78.0		1.0	1.0	80.1		1.0	1.0	82.6		1.0	1.0
Cyanide, Total (mg/Kg)	NR				NR				NR			

NR: Not analyzed.

J: Result is less than the RL but greater than

Generated on 10/23/2009 11:52:38 AM

TestAmerica

SUMMARY OF ANALYTICAL RESULTS: 460-

Sample ID	NVF-SB-31C				NVF-SB-32A				NVF-SB-32B			
Lab Sample No.	460-6944-20				460-6944-21				460-6944-22			
Sampling Date	10/14/2009 12:20:00 PM				10/14/2009 12:00:00 PM				10/14/2009 12:00:00 PM			
Matrix	Solid				Solid				Solid			
Dilution Factor												
Units												
WET CHEMISTRY			MDL	PQL			MDL	PQL			MDL	PQL
Percent Moisture (%)	25.4		1.0	1.0	17.6		1.0	1.0	17.5		1.0	1.0
Percent Solids (%)	74.6		1.0	1.0	82.4		1.0	1.0	82.5		1.0	1.0
Cyanide, Total (mg/Kg)	NR				NR				NR			

NR: Not analyzed.

J: Result is less than the RL but greater than

Generated on 10/23/2009 11:52:38 AM

TestAmerica

SUMMARY OF ANALYTICAL RESULTS: 460-

Sample ID	NVF-SB-32C				NVF-SB-33A				NVF-SB-33B			
Lab Sample No.	460-6944-23				460-6944-24				460-6944-25			
Sampling Date	10/14/2009 12:00:00 PM				10/14/2009 11:30:00 AM				10/14/2009 11:30:00 AM			
Matrix	Solid				Solid				Solid			
Dilution Factor												
Units												
WET CHEMISTRY			MDL	PQL			MDL	PQL			MDL	PQL
Percent Moisture (%)	14.1		1.0	1.0	19.1		1.0	1.0	15.7		1.0	1.0
Percent Solids (%)	85.9		1.0	1.0	80.9		1.0	1.0	84.3		1.0	1.0
Cyanide, Total (mg/Kg)	NR				NR				NR			

NR: Not analyzed.

J: Result is less than the RL but greater than

Generated on 10/23/2009 11:52:38 AM

TestAmerica

SUMMARY OF ANALYTICAL RESULTS: 460-

Sample ID	NVF-SB-33C				NVF-SB-34A				NVF-SB-34B			
Lab Sample No.	460-6944-26				460-6944-27				460-6944-28			
Sampling Date	10/14/2009 11:30:00 AM				10/14/2009 10:40:00 AM				10/14/2009 10:40:00 AM			
Matrix	Solid				Solid				Solid			
Dilution Factor												
Units												
WET CHEMISTRY			MDL	PQL			MDL	PQL			MDL	PQL
Percent Moisture (%)	13.0		1.0	1.0	20.1		1.0	1.0	18.3		1.0	1.0
Percent Solids (%)	87.0		1.0	1.0	79.9		1.0	1.0	81.7		1.0	1.0
Cyanide, Total (mg/Kg)	NR				NR				NR			

NR: Not analyzed.

J: Result is less than the RL but greater than

Generated on 10/23/2009 11:52:38 AM

SUMMARY OF ANALYTICAL RESULTS: 460-

Sample ID	NVF-SB-34C				NVF-SB-9C				NVF-SB-35A			
Lab Sample No.	460-6944-29				460-6944-3				460-6944-30			
Sampling Date	10/14/2009 10:40:00 AM				10/14/2009 1:35:00 PM				10/14/2009 11:00:00 AM			
Matrix	Solid				Solid				Solid			
Dilution Factor												
Units												
WET CHEMISTRY			MDL	PQL			MDL	PQL			MDL	PQL
Percent Moisture (%)	14.3		1.0	1.0	21.5		1.0	1.0	12.1		1.0	1.0
Percent Solids (%)	85.7		1.0	1.0	78.5		1.0	1.0	87.9		1.0	1.0
Cyanide, Total (mg/Kg)	NR				NR				NR			

NR: Not analyzed.

J: Result is less than the RL but greater than

Generated on 10/23/2009 11:52:38 AM

SUMMARY OF ANALYTICAL RESULTS: 460-

Sample ID	NVF-SB-35B				NVF-SB-35C				NVF-SB-11A			
Lab Sample No.	460-6944-31				460-6944-32				460-6944-33			
Sampling Date	10/14/2009 11:00:00 AM				10/14/2009 11:00:00 AM				10/14/2009 9:05:00 AM			
Matrix	Solid				Solid				Solid			
Dilution Factor												
Units												
WET CHEMISTRY			MDL	PQL			MDL	PQL			MDL	PQL
Percent Moisture (%)	20.1		1.0	1.0	14.7		1.0	1.0	16.7		1.0	1.0
Percent Solids (%)	79.9		1.0	1.0	85.3		1.0	1.0	83.3		1.0	1.0
Cyanide, Total (mg/Kg)	NR				NR				NR			

NR: Not analyzed.

J: Result is less than the RL but greater than

Generated on 10/23/2009 11:52:38 AM

TestAmerica

SUMMARY OF ANALYTICAL RESULTS: 460-

Sample ID	NVF-SB-11B				NVF-SB-11C				NVF-SB-12A			
Lab Sample No.	460-6944-34				460-6944-35				460-6944-36			
Sampling Date	10/14/2009 9:05:00 AM				10/14/2009 9:05:00 AM				10/14/2009 8:40:00 AM			
Matrix	Solid				Solid				Solid			
Dilution Factor												
Units												
WET CHEMISTRY			MDL	PQL			MDL	PQL			MDL	PQL
Percent Moisture (%)	17.2		1.0	1.0	16.9		1.0	1.0	13.9		1.0	1.0
Percent Solids (%)	82.8		1.0	1.0	83.1		1.0	1.0	86.1		1.0	1.0
Cyanide, Total (mg/Kg)	NR				NR				0.21	J	0.13	0.58

NR: Not analyzed.

J: Result is less than the RL but greater than

Generated on 10/23/2009 11:52:38 AM

TestAmerica

SUMMARY OF ANALYTICAL RESULTS: 460-

Sample ID	NVF-SB-12B				NVF-SB-12C				NVF-SB-912A			
Lab Sample No.	460-6944-37				460-6944-38				460-6944-39			
Sampling Date	10/14/2009 8:40:00 AM				10/14/2009 8:40:00 AM				10/14/2009 8:40:00 AM			
Matrix	Solid				Solid				Solid			
Dilution Factor												
Units												
WET CHEMISTRY			MDL	PQL			MDL	PQL			MDL	PQL
Percent Moisture (%)	18.7		1.0	1.0	19.5		1.0	1.0	13.5		1.0	1.0
Percent Solids (%)	81.3		1.0	1.0	80.5		1.0	1.0	86.5		1.0	1.0
Cyanide, Total (mg/Kg)	NR				NR				0.13	J	0.13	0.58

NR: Not analyzed.

J: Result is less than the RL but greater than

Generated on 10/23/2009 11:52:38 AM

SUMMARY OF ANALYTICAL RESULTS: 460-

Sample ID	NVF-SB-908				NVF-SB-912B				NVF-SB-912C			
Lab Sample No.	460-6944-4				460-6944-40				460-6944-41			
Sampling Date	10/14/2009 1:35:00 PM				10/14/2009 8:40:00 AM				10/14/2009 8:40:00 AM			
Matrix	Solid				Solid				Solid			
Dilution Factor												
Units												
WET CHEMISTRY			MDL	PQL			MDL	PQL			MDL	PQL
Percent Moisture (%)	13.2		1.0	1.0	15.4		1.0	1.0	19.8		1.0	1.0
Percent Solids (%)	86.8		1.0	1.0	84.6		1.0	1.0	80.2		1.0	1.0
Cyanide, Total (mg/Kg)	NR				NR				NR			

NR: Not analyzed.

J: Result is less than the RL but greater than

Generated on 10/23/2009 11:52:38 AM

TestAmerica

SUMMARY OF ANALYTICAL RESULTS: 460-

Sample ID	NVF-SB-08A				NVF-SB-08B				NVF-SB-08C			
Lab Sample No.	460-6944-42				460-6944-43				460-6944-44			
Sampling Date	10/14/2009 2:00:00 PM				10/14/2009 2:00:00 PM				10/14/2009 2:00:00 PM			
Matrix	Solid				Solid				Solid			
Dilution Factor												
Units												
WET CHEMISTRY			MDL	PQL			MDL	PQL			MDL	PQL
Percent Moisture (%)	12.7		1.0	1.0	18.9		1.0	1.0	15.0		1.0	1.0
Percent Solids (%)	87.3		1.0	1.0	81.1		1.0	1.0	85.0		1.0	1.0
Cyanide, Total (mg/Kg)	NR				NR				NR			

NR: Not analyzed.

J: Result is less than the RL but greater than

Generated on 10/23/2009 11:52:38 AM

TestAmerica

SUMMARY OF ANALYTICAL RESULTS: 460-

Sample ID	NVF-SB-30A				NVF-SB-30B				NVF-SB-29A			
Lab Sample No.	460-6944-5				460-6944-6				460-6944-7			
Sampling Date	10/14/2009 2:30:00 PM				10/14/2009 2:30:00 PM				10/14/2009 2:50:00 PM			
Matrix	Solid				Solid				Solid			
Dilution Factor												
Units												
WET CHEMISTRY			MDL	PQL			MDL	PQL			MDL	PQL
Percent Moisture (%)	16.4		1.0	1.0	19.9		1.0	1.0	19.5		1.0	1.0
Percent Solids (%)	83.6		1.0	1.0	80.1		1.0	1.0	80.5		1.0	1.0
Cyanide, Total (mg/Kg)	NR				NR				NR			

NR: Not analyzed.

J: Result is less than the RL but greater than

Generated on 10/23/2009 11:52:38 AM

TestAmerica

SUMMARY OF ANALYTICAL RESULTS: 460-

Sample ID	NVF-SB-29B				NVF-SB-26A			
Lab Sample No.	460-6944-8				460-6944-9			
Sampling Date	10/14/2009 2:50:00 PM				10/14/2009 3:15:00 PM			
Matrix	Solid				Solid			
Dilution Factor								
Units								
WET CHEMISTRY			MDL	PQL			MDL	PQL
Percent Moisture (%)	16.2		1.0	1.0	26.2		1.0	1.0
Percent Solids (%)	83.8		1.0	1.0	73.8		1.0	1.0
Cyanide, Total (mg/Kg)	NR				NR			

NR: Not analyzed.

J: Result is less than the RL but greater than

Generated on 10/23/2009 11:52:38 AM

TestAmerica

SUMMARY OF ANALYTICAL RESULTS: 460-6950-1

Sample ID	NVF-SB-15-A				NVF-SB-07-AA				NVF-SB-10-AA			
Lab Sample No.	460-6950-7				460-6950-28				460-6950-29			
Sampling Date	10/15/2009 1:40:00 PM				10/15/2009 4:00:00 PM				10/15/2009 4:00:00 PM			
Matrix	Solid				Solid				Solid			
Dilution Factor	50				50				50			
Units	mg/kg				mg/kg				mg/kg			
VOLATILE COMPOUNDS (GC/MS)			MDL	PQL			MDL	PQL			MDL	PQL
1,1,1-Trichloroethane	0.10	U	0.026	0.10	0.11	U	0.027	0.11	0.21	U	0.052	0.21
1,1,2,2-Tetrachloroethane	0.10	U	0.0089	0.10	0.11	U	0.0092	0.11	0.21	U	0.018	0.21
1,1,2-Trichloro-1,2,2-trifluoroethane	0.10	U	0.030	0.10	0.11	U	0.031	0.11	0.21	U	0.060	0.21
1,1,2-Trichloroethane	0.10	U	0.010	0.10	0.11	U	0.010	0.11	0.21	U	0.020	0.21
1,1-Dichloroethane	0.10	U	0.010	0.10	0.11	U	0.011	0.11	0.21	U	0.021	0.21
1,1-Dichloroethene	0.10	U	0.015	0.10	0.11	U	0.015	0.11	0.21	U	0.029	0.21
1,2,4-Trichlorobenzene	0.10	U	0.045	0.10	0.11	U	0.047	0.11	0.21	U	0.091	0.21
1,2-Dibromo-3-Chloropropane	0.10	U	0.016	0.10	0.11	U	0.016	0.11	0.21	U	0.032	0.21
1,2-Dibromoethane	0.10	U	0.0094	0.10	0.11	U	0.0098	0.11	0.21	U	0.019	0.21
1,2-Dichlorobenzene	0.10	U	0.017	0.10	0.11	U	0.017	0.11	0.21	U	0.034	0.21
1,2-Dichloroethane	0.10	U	0.025	0.10	0.11	U	0.026	0.11	0.21	U	0.051	0.21
1,2-Dichloropropane	0.10	U	0.009	0.10	0.11	U	0.0094	0.11	0.21	U	0.018	0.21
1,3-Dichlorobenzene	0.10	U	0.023	0.10	0.11	U	0.024	0.11	0.21	U	0.047	0.21
1,4-Dichlorobenzene	0.10	U	0.016	0.10	0.11	U	0.016	0.11	0.21	U	0.031	0.21
2-Butanone (MEK)	1.0	U	0.085	1.0	1.1	U	0.088	1.1	2.1	U	0.17	2.1
2-Hexanone	1.0	U	0.056	1.0	1.1	U	0.059	1.1	2.1	U	0.11	2.1
4-Methyl-2-pentanone (MIBK)	1.0	U	0.071	1.0	1.1	U	0.073	1.1	2.1	U	0.14	2.1
Acetone	1.0	U	0.26	1.0	1.1	U	0.27	1.1	2.1	U	0.52	2.1
Benzene	0.10	U	0.012	0.10	0.11	U	0.013	0.11	0.21	U	0.025	0.21
Bromoform	0.10	U	0.010	0.10	0.11	U	0.011	0.11	0.21	U	0.021	0.21
Bromomethane	0.10	U	0.032	0.10	0.11	U	0.034	0.11	0.21	U	0.065	0.21
Carbon disulfide	0.10	U	0.015	0.10	0.11	U	0.016	0.11	0.21	U	0.030	0.21

TestAmerica

SUMMARY OF ANALYTICAL RESULTS: 460-6950-1

Sample ID	NVF-SB-15-A				NVF-SB-07-AA				NVF-SB-10-AA			
Lab Sample No.	460-6950-7				460-6950-28				460-6950-29			
Sampling Date	10/15/2009 1:40:00 PM				10/15/2009 4:00:00 PM				10/15/2009 4:00:00 PM			
Matrix	Solid				Solid				Solid			
Dilution Factor	50				50				50			
Units	mg/kg				mg/kg				mg/kg			
VOLATILE COMPOUNDS (GC/MS)			MDL	PQL			MDL	PQL			MDL	PQL
Carbon tetrachloride	0.10	U	0.019	0.10	0.11	U	0.019	0.11	0.21	U	0.038	0.21
Chlorobenzene	0.10	U	0.017	0.10	0.11	U	0.018	0.11	0.21	U	0.034	0.21
Chlorodibromomethane	0.10	U	0.010	0.10	0.11	U	0.011	0.11	0.21	U	0.021	0.21
Chloroethane	0.10	U	0.046	0.10	0.11	U	0.048	0.11	0.21	U	0.093	0.21
Chloroform	0.10	U	0.016	0.10	0.11	U	0.017	0.11	0.21	U	0.032	0.21
Chloromethane	0.10	U	0.022	0.10	0.11	U	0.023	0.11	0.21	U	0.044	0.21
cis-1,2-Dichloroethene	0.10	U	0.020	0.10	0.11	U	0.021	0.11	0.21	U	0.040	0.21
cis-1,3-Dichloropropene	0.10	U	0.011	0.10	0.11	U	0.011	0.11	0.21	U	0.021	0.21
Cyclohexane	0.10	U	0.013	0.10	0.11	U	0.013	0.11	0.21	U	0.026	0.21
Dichlorobromomethane	0.10	U	0.0093	0.10	0.11	U	0.0096	0.11	0.21	U	0.019	0.21
Dichlorodifluoromethane	0.10	U	0.029	0.10	0.11	U	0.030	0.11	0.21	U	0.059	0.21
Ethylbenzene	0.10	U	0.026	0.10	0.11	U	0.026	0.11	0.21	U	0.051	0.21
Isopropylbenzene	0.10	U	0.022	0.10	0.11	U	0.023	0.11	0.21	U	0.044	0.21
Methyl acetate	0.21	U	0.034	0.21	0.21	U	0.035	0.21	0.42	U	0.068	0.42
Methyl tert-butyl ether	0.10	U	0.019	0.10	0.11	U	0.020	0.11	0.21	U	0.039	0.21
Methylcyclohexane	0.10	U	0.0083	0.10	0.11	U	0.0086	0.11	0.21	U	0.017	0.21
Methylene Chloride	0.10	U	0.020	0.10	0.11	U	0.021	0.11	0.21	U	0.040	0.21
Styrene	0.10	U	0.014	0.10	0.11	U	0.015	0.11	0.21	U	0.029	0.21
Tetrachloroethene	0.10	U	0.020	0.10	0.11	U	0.021	0.11	0.21	U	0.041	0.21
Toluene	0.10	U	0.0098	0.10	0.11	U	0.010	0.11	0.21	U	0.020	0.21
trans-1,2-Dichloroethene	0.10	U	0.014	0.10	0.11	U	0.015	0.11	0.21	U	0.029	0.21
trans-1,3-Dichloropropene	0.10	U	0.013	0.10	0.11	U	0.013	0.11	0.21	U	0.025	0.21

SUMMARY OF ANALYTICAL RESULTS: 460-6950-1

Sample ID	NVF-SB-15-A				NVF-SB-07-AA				NVF-SB-10-AA			
Lab Sample No.	460-6950-7				460-6950-28				460-6950-29			
Sampling Date	10/15/2009 1:40:00 PM				10/15/2009 4:00:00 PM				10/15/2009 4:00:00 PM			
Matrix	Solid				Solid				Solid			
Dilution Factor	50				50				50			
Units	mg/kg				mg/kg				mg/kg			
VOLATILE COMPOUNDS (GC/MS)			MDL	PQL			MDL	PQL			MDL	PQL
Trichloroethene	0.10	U	0.018	0.10	0.11	U	0.019	0.11	0.21	U	0.037	0.21
Trichlorofluoromethane	0.10	U	0.016	0.10	0.11	U	0.017	0.11	0.21	U	0.033	0.21
Vinyl chloride	0.10	U	0.012	0.10	0.11	U	0.013	0.11	0.21	U	0.025	0.21
Xylenes, Total	0.31	U	0.045	0.31	0.32	U	0.047	0.32	0.63	U	0.091	0.63
Total Confident Conc.	0				0				0			
Total Estimated Conc. (TICs)	0				10.73				14.2			

NR: Not analyzed.

Generated on 10/23/2009 8:55:43 AM

TestAmerica

SUMMARY OF ANALYTICAL RESULTS: 460-6950-1

Sample ID	NVF-SB-16-A				NVF-SB-15-A				NVF-SB-28-B			
Lab Sample No.	460-6950-3				460-6950-7				460-6950-16			
Sampling Date	10/15/2009 1:45:00 PM				10/15/2009 1:40:00 PM				10/15/2009 11:10:00 AM			
Matrix	Solid				Solid				Solid			
Dilution Factor	1				1				1			
Units	mg/kg				mg/kg				mg/kg			
SEMIVOLATILE COMPOUNDS (GC/MS)			MDL	PQL			MDL	PQL			MDL	PQL
1,1'-Biphenyl	0.42	U	0.069	0.42	0.36	U	0.059	0.36	0.46	U	0.076	0.46
2,2'-oxybis[1-chloropropane]	0.42	U	0.055	0.42	0.36	U	0.047	0.36	0.46	U	0.061	0.46
2,4,5-Trichlorophenol	0.42	U	0.081	0.42	0.36	U	0.069	0.36	0.46	U	0.089	0.46
2,4,6-Trichlorophenol	0.42	U	0.075	0.42	0.36	U	0.064	0.36	0.46	U	0.083	0.46
2,4-Dichlorophenol	0.42	U	0.068	0.42	0.36	U	0.058	0.36	0.46	U	0.074	0.46
2,4-Dimethylphenol	0.42	U	0.068	0.42	0.36	U	0.058	0.36	0.46	U	0.074	0.46
2,4-Dinitrophenol	1.3	U	0.089	1.3	1.1	U	0.076	1.1	1.4	U	0.098	1.4
2,4-Dinitrotoluene	0.085	U	0.012	0.085	0.073	U	0.010	0.073	0.094	U	0.014	0.094
2,6-Dinitrotoluene	0.085	U	0.011	0.085	0.073	U	0.0091	0.073	0.094	U	0.012	0.094
2-Chloronaphthalene	0.42	U	0.059	0.42	0.36	U	0.051	0.36	0.46	U	0.065	0.46
2-Chlorophenol	0.42	U	0.056	0.42	0.36	U	0.048	0.36	0.46	U	0.062	0.46
2-Methylnaphthalene	0.42	U	0.062	0.42	0.36	U	0.052	0.36	0.46	U	0.068	0.46
2-Methylphenol	0.42	U	0.061	0.42	0.36	U	0.052	0.36	0.46	U	0.067	0.46
2-Nitroaniline	0.85	U	0.12	0.85	0.73	U	0.098	0.73	0.94	U	0.13	0.94
2-Nitrophenol	0.42	U	0.069	0.42	0.36	U	0.059	0.36	0.46	U	0.076	0.46
3,3'-Dichlorobenzidine	0.85	U	0.093	0.85	0.73	U	0.079	0.73	0.94	U	0.10	0.94
3-Nitroaniline	0.85	U	0.095	0.85	0.73	U	0.081	0.73	0.94	U	0.10	0.94
4,6-Dinitro-2-methylphenol	1.3	U	0.20	1.3	1.1	U	0.17	1.1	1.4	U	0.22	1.4
4-Bromophenyl phenyl ether	0.42	U	0.075	0.42	0.36	U	0.064	0.36	0.46	U	0.083	0.46
4-Chloro-3-methylphenol	0.42	U	0.071	0.42	0.36	U	0.060	0.36	0.46	U	0.078	0.46
4-Chloroaniline	0.42	U	0.053	0.42	0.36	U	0.045	0.36	0.46	U	0.058	0.46
4-Chlorophenyl phenyl ether	0.42	U	0.072	0.42	0.36	U	0.062	0.36	0.46	U	0.080	0.46
4-Methylphenol	0.42	U	0.069	0.42	0.36	U	0.059	0.36	0.46	U	0.076	0.46
4-Nitroaniline	0.85	U	0.087	0.85	0.73	U	0.074	0.73	0.94	U	0.096	0.94
4-Nitrophenol	1.3	U	0.11	1.3	1.1	U	0.092	1.1	1.4	U	0.12	1.4

TestAmerica

SUMMARY OF ANALYTICAL RESULTS: 460-6950-1

Sample ID	NVF-SB-16-A				NVF-SB-15-A				NVF-SB-28-B			
Lab Sample No.	460-6950-3				460-6950-7				460-6950-16			
Sampling Date	10/15/2009 1:45:00 PM				10/15/2009 1:40:00 PM				10/15/2009 11:10:00 AM			
Matrix	Solid				Solid				Solid			
Dilution Factor	1				1				1			
Units	mg/kg				mg/kg				mg/kg			
SEMIVOLATILE COMPOUNDS (GC/MS)			MDL	PQL			MDL	PQL			MDL	PQL
Acenaphthene	0.42	U	0.060	0.42	0.36	U	0.051	0.36	0.46	U	0.066	0.46
Acenaphthylene	0.42	U	0.060	0.42	0.36	U	0.051	0.36	0.46	U	0.066	0.46
Acetophenone	0.42	U	0.063	0.42	0.36	U	0.053	0.36	0.46	U	0.069	0.46
Anthracene	0.42	U	0.074	0.42	0.36	U	0.063	0.36	0.46	U	0.082	0.46
Atrazine	0.42	U	0.079	0.42	0.36	U	0.067	0.36	0.46	U	0.086	0.46
Benzaldehyde	0.42	U	0.026	0.42	0.36	U	0.022	0.36	0.46	U	0.029	0.46
Benzo[a]anthracene	0.042	U	0.0078	0.042	0.036	U	0.0066	0.036	0.046	U	0.0086	0.046
Benzo[a]pyrene	0.042	U	0.0052	0.042	0.036	U	0.0044	0.036	0.046	U	0.0057	0.046
Benzo[b]fluoranthene	0.042	U	0.0063	0.042	0.036	U	0.0053	0.036	0.046	U	0.0069	0.046
Benzo[g,h,i]perylene	0.42	U	0.044	0.42	0.36	U	0.038	0.36	0.46	U	0.049	0.46
Benzo[k]fluoranthene	0.042	U	0.0059	0.042	0.036	U	0.005	0.036	0.046	U	0.0065	0.046
Bis(2-chloroethoxy)methane	0.42	U	0.060	0.42	0.36	U	0.051	0.36	0.46	U	0.066	0.46
Bis(2-chloroethyl)ether	0.042	U	0.0088	0.042	0.036	U	0.0075	0.036	0.046	U	0.0097	0.046
Bis(2-ethylhexyl) phthalate	0.42	U	0.056	0.42	0.36	U	0.048	0.36	0.46	U	0.062	0.46
Butyl benzyl phthalate	0.42	U	0.049	0.42	0.36	U	0.042	0.36	0.46	U	0.054	0.46
Caprolactam	0.42	U	0.058	0.42	0.36	U	0.049	0.36	0.46	U	0.064	0.46
Carbazole	0.42	U	0.067	0.42	0.36	U	0.057	0.36	0.46	U	0.074	0.46
Chrysene	0.42	U	0.061	0.42	0.36	U	0.052	0.36	0.46	U	0.067	0.46
Dibenz(a,h)anthracene	0.042	U	0.0051	0.042	0.036	U	0.0043	0.036	0.046	U	0.0056	0.046
Dibenzofuran	0.42	U	0.063	0.42	0.36	U	0.054	0.36	0.46	U	0.070	0.46
Diethyl phthalate	0.42	U	0.057	0.42	0.36	U	0.048	0.36	0.46	U	0.062	0.46
Dimethyl phthalate	0.42	U	0.057	0.42	0.36	U	0.049	0.36	0.46	U	0.063	0.46
Di-n-butyl phthalate	0.42	U	0.064	0.42	0.36	U	0.055	0.36	0.46	U	0.071	0.46
Di-n-octyl phthalate	0.42	U	0.050	0.42	0.36	U	0.043	0.36	0.46	U	0.055	0.46
Fluoranthene	0.42	U	0.070	0.42	0.36	U	0.060	0.36	0.46	U	0.077	0.46

TestAmerica

SUMMARY OF ANALYTICAL RESULTS: 460-6950-1

Sample ID	NVF-SB-16-A				NVF-SB-15-A				NVF-SB-28-B			
Lab Sample No.	460-6950-3				460-6950-7				460-6950-16			
Sampling Date	10/15/2009 1:45:00 PM				10/15/2009 1:40:00 PM				10/15/2009 11:10:00 AM			
Matrix	Solid				Solid				Solid			
Dilution Factor	1				1				1			
Units	mg/kg				mg/kg				mg/kg			
SEMIVOLATILE COMPOUNDS (GC/MS)			MDL	PQL			MDL	PQL			MDL	PQL
Fluorene	0.42	U	0.071	0.42	0.36	U	0.061	0.36	0.46	U	0.078	0.46
Hexachlorobenzene	0.042	U	0.0058	0.042	0.036	U	0.005	0.036	0.046	U	0.0064	0.046
Hexachlorobutadiene	0.085	U	0.017	0.085	0.073	U	0.015	0.073	0.094	U	0.019	0.094
Hexachlorocyclopentadiene	0.42	U	0.12	0.42	0.36	U	0.10	0.36	0.46	U	0.14	0.46
Hexachloroethane	0.042	U	0.0071	0.042	0.036	U	0.0061	0.036	0.046	U	0.0078	0.046
Indeno[1,2,3-cd]pyrene	0.042	U	0.0067	0.042	0.036	U	0.0057	0.036	0.046	U	0.0074	0.046
Isophorone	0.42	U	0.048	0.42	0.36	U	0.041	0.36	0.46	U	0.053	0.46
Naphthalene	0.42	U	0.062	0.42	0.36	U	0.053	0.36	0.46	U	0.068	0.46
Nitrobenzene	0.042	U	0.0094	0.042	0.036	U	0.008	0.036	0.046	U	0.010	0.046
N-Nitrosodi-n-propylamine	0.042	U	0.0056	0.042	0.036	U	0.0047	0.036	0.046	U	0.0061	0.046
N-Nitrosodiphenylamine	0.42	U	0.069	0.42	0.36	U	0.059	0.36	0.46	U	0.076	0.46
Pentachlorophenol	1.3	U	0.21	1.3	1.1	U	0.18	1.1	1.4	U	0.23	1.4
Phenanthrene	0.42	U	0.074	0.42	0.36	U	0.063	0.36	0.46	U	0.081	0.46
Phenol	0.42	U	0.052	0.42	0.36	U	0.044	0.36	0.46	U	0.057	0.46
Pyrene	0.42	U	0.073	0.42	0.36	U	0.062	0.36	0.46	U	0.080	0.46
Total Confident Conc.	0				0				0			
Total Estimated Conc. (TICs)	0				0				0.71			

NR: Not analyzed.

U: Indicates the analyte was analyzed for but not detected.

Generated on 10/23/2009 8:55:44 AM

TestAmerica

SUMMARY OF ANALYTICAL RESULTS: 460-

Sample ID	NVF-SB-37-A				NVF-SB-51-A				NVF-SB-51-B			
Lab Sample No.	460-6950-22				460-6950-24				460-6950-25			
Sampling Date	10/15/2009 8:35:00 AM				10/15/2009 10:35:00 AM				10/15/2009 10:40:00 AM			
Matrix	Solid				Solid				Solid			
Dilution Factor	1				1				1			
Units	mg/kg				mg/kg				mg/kg			
SEMIVOLATILE COMPOUNDS (GC/MS)			MDL	PQL			MDL	PQL			MDL	PQL
1,1'-Biphenyl	0.37	U	0.061	0.37	0.37	U	0.062	0.37	0.42	U	0.069	0.42
2,2'-oxybis[1-chloropropane]	0.37	U	0.048	0.37	0.37	U	0.049	0.37	0.42	U	0.055	0.42
2,4,5-Trichlorophenol	0.37	U	0.071	0.37	0.37	U	0.072	0.37	0.42	U	0.081	0.42
2,4,6-Trichlorophenol	0.37	U	0.066	0.37	0.37	U	0.067	0.37	0.42	U	0.075	0.42
2,4-Dichlorophenol	0.37	U	0.059	0.37	0.37	U	0.060	0.37	0.42	U	0.067	0.42
2,4-Dimethylphenol	0.37	U	0.059	0.37	0.37	U	0.060	0.37	0.42	U	0.067	0.42
2,4-Dinitrophenol	1.1	U	0.078	1.1	1.1	U	0.079	1.1	1.3	U	0.089	1.3
2,4-Dinitrotoluene	0.075	U	0.011	0.075	0.076	U	0.011	0.076	0.085	U	0.012	0.085
2,6-Dinitrotoluene	0.075	U	0.0094	0.075	0.076	U	0.0095	0.076	0.085	U	0.011	0.085
2-Chloronaphthalene	0.37	U	0.052	0.37	0.37	U	0.053	0.37	0.42	U	0.059	0.42
2-Chlorophenol	0.37	U	0.049	0.37	0.37	U	0.050	0.37	0.42	U	0.056	0.42
2-Methylnaphthalene	0.37	U	0.054	0.37	0.37	U	0.055	0.37	0.42	U	0.061	0.42
2-Methylphenol	0.37	U	0.053	0.37	0.37	U	0.054	0.37	0.42	U	0.061	0.42
2-Nitroaniline	0.75	U	0.10	0.75	0.76	U	0.10	0.76	0.85	U	0.12	0.85
2-Nitrophenol	0.37	U	0.061	0.37	0.37	U	0.062	0.37	0.42	U	0.069	0.42
3,3'-Dichlorobenzidine	0.75	U	0.082	0.75	0.76	U	0.083	0.76	0.85	U	0.093	0.85
3-Nitroaniline	0.75	U	0.083	0.75	0.76	U	0.085	0.76	0.85	U	0.095	0.85
4,6-Dinitro-2-methylphenol	1.1	U	0.18	1.1	1.1	U	0.18	1.1	1.3	U	0.20	1.3
4-Bromophenyl phenyl ether	0.37	U	0.066	0.37	0.37	U	0.067	0.37	0.42	U	0.075	0.42
4-Chloro-3-methylphenol	0.37	U	0.062	0.37	0.37	U	0.063	0.37	0.42	U	0.071	0.42
4-Chloroaniline	0.37	U	0.046	0.37	0.37	U	0.047	0.37	0.42	U	0.053	0.42
4-Chlorophenyl phenyl ether	0.37	U	0.063	0.37	0.37	U	0.064	0.37	0.42	U	0.072	0.42
4-Methylphenol	0.37	U	0.060	0.37	0.37	U	0.061	0.37	0.42	U	0.069	0.42
4-Nitroaniline	0.75	U	0.076	0.75	0.76	U	0.077	0.76	0.85	U	0.087	0.85
4-Nitrophenol	1.1	U	0.095	1.1	1.1	U	0.096	1.1	1.3	U	0.11	1.3

TestAmerica

SUMMARY OF ANALYTICAL RESULTS: 460-

Sample ID	NVF-SB-37-A				NVF-SB-51-A				NVF-SB-51-B			
Lab Sample No.	460-6950-22				460-6950-24				460-6950-25			
Sampling Date	10/15/2009 8:35:00 AM				10/15/2009 10:35:00 AM				10/15/2009 10:40:00 AM			
Matrix	Solid				Solid				Solid			
Dilution Factor	1				1				1			
Units	mg/kg				mg/kg				mg/kg			
SEMIVOLATILE COMPOUNDS (GC/MS)			MDL	PQL			MDL	PQL			MDL	PQL
Acenaphthene	0.37	U	0.053	0.37	0.37	U	0.053	0.37	0.42	U	0.060	0.42
Acenaphthylene	0.37	U	0.053	0.37	0.37	U	0.054	0.37	0.42	U	0.060	0.42
Acetophenone	0.37	U	0.055	0.37	0.37	U	0.056	0.37	0.42	U	0.062	0.42
Anthracene	0.37	U	0.065	0.37	0.37	U	0.066	0.37	0.42	U	0.074	0.42
Atrazine	0.37	U	0.069	0.37	0.37	U	0.070	0.37	0.42	U	0.078	0.42
Benzaldehyde	0.37	U	0.023	0.37	0.37	U	0.023	0.37	0.42	U	0.026	0.42
Benzo[a]anthracene	0.037	U	0.0068	0.037	0.037	U	0.0069	0.037	0.042	U	0.0078	0.042
Benzo[a]pyrene	0.035	J	0.0045	0.037	0.037	U	0.0046	0.037	0.042	U	0.0052	0.042
Benzo[b]fluoranthene	0.039		0.0055	0.037	0.037	U	0.0056	0.037	0.042	U	0.0063	0.042
Benzo[g,h,i]perylene	0.37	U	0.039	0.37	0.37	U	0.039	0.37	0.42	U	0.044	0.42
Benzo[k]fluoranthene	0.037	U	0.0052	0.037	0.037	U	0.0052	0.037	0.042	U	0.0059	0.042
Bis(2-chloroethoxy)methane	0.37	U	0.053	0.37	0.37	U	0.053	0.37	0.42	U	0.060	0.42
Bis(2-chloroethyl)ether	0.037	U	0.0077	0.037	0.037	U	0.0078	0.037	0.042	U	0.0088	0.042
Bis(2-ethylhexyl) phthalate	0.37	U	0.049	0.37	0.37	U	0.050	0.37	0.42	U	0.056	0.42
Butyl benzyl phthalate	0.37	U	0.043	0.37	0.37	U	0.044	0.37	0.42	U	0.049	0.42
Caprolactam	0.37	U	0.051	0.37	0.37	U	0.051	0.37	0.42	U	0.058	0.42
Carbazole	0.37	U	0.059	0.37	0.37	U	0.060	0.37	0.42	U	0.067	0.42
Chrysene	0.081	J	0.054	0.37	0.37	U	0.054	0.37	0.42	U	0.061	0.42
Dibenz(a,h)anthracene	0.037	U	0.0044	0.037	0.037	U	0.0045	0.037	0.042	U	0.0051	0.042
Dibenzofuran	0.37	U	0.055	0.37	0.37	U	0.056	0.37	0.42	U	0.063	0.42
Diethyl phthalate	0.37	U	0.050	0.37	0.37	U	0.050	0.37	0.42	U	0.056	0.42
Dimethyl phthalate	0.37	U	0.050	0.37	0.37	U	0.051	0.37	0.42	U	0.057	0.42
Di-n-butyl phthalate	0.37	U	0.056	0.37	0.37	U	0.057	0.37	0.42	U	0.064	0.42
Di-n-octyl phthalate	0.37	U	0.044	0.37	0.37	U	0.044	0.37	0.42	U	0.050	0.42
Fluoranthene	0.37	U	0.061	0.37	0.37	U	0.062	0.37	0.42	U	0.070	0.42

TestAmerica

SUMMARY OF ANALYTICAL RESULTS: 460-

Sample ID	NVF-SB-37-A				NVF-SB-51-A				NVF-SB-51-B			
Lab Sample No.	460-6950-22				460-6950-24				460-6950-25			
Sampling Date	10/15/2009 8:35:00 AM				10/15/2009 10:35:00 AM				10/15/2009 10:40:00 AM			
Matrix	Solid				Solid				Solid			
Dilution Factor	1				1				1			
Units	mg/kg				mg/kg				mg/kg			
SEMIVOLATILE COMPOUNDS (GC/MS)			MDL	PQL			MDL	PQL			MDL	PQL
Fluorene	0.37	U	0.062	0.37	0.37	U	0.063	0.37	0.42	U	0.071	0.42
Hexachlorobenzene	0.037	U	0.0051	0.037	0.037	U	0.0052	0.037	0.042	U	0.0058	0.042
Hexachlorobutadiene	0.075	U	0.015	0.075	0.076	U	0.015	0.076	0.085	U	0.017	0.085
Hexachlorocyclopentadiene	0.37	U	0.11	0.37	0.37	U	0.11	0.37	0.42	U	0.12	0.42
Hexachloroethane	0.037	U	0.0062	0.037	0.037	U	0.0063	0.037	0.042	U	0.0071	0.042
Indeno[1,2,3-cd]pyrene	0.037	U	0.0059	0.037	0.037	U	0.006	0.037	0.042	U	0.0067	0.042
Isophorone	0.37	U	0.042	0.37	0.37	U	0.043	0.37	0.42	U	0.048	0.42
Naphthalene	0.37	U	0.054	0.37	0.37	U	0.055	0.37	0.42	U	0.062	0.42
Nitrobenzene	0.037	U	0.0083	0.037	0.037	U	0.0084	0.037	0.042	U	0.0094	0.042
N-Nitrosodi-n-propylamine	0.037	U	0.0049	0.037	0.037	U	0.0049	0.037	0.042	U	0.0056	0.042
N-Nitrosodiphenylamine	0.37	U	0.060	0.37	0.37	U	0.061	0.37	0.42	U	0.069	0.42
Pentachlorophenol	1.1	U	0.18	1.1	1.1	U	0.18	1.1	1.3	U	0.21	1.3
Phenanthrene	0.37	U	0.064	0.37	0.37	U	0.065	0.37	0.42	U	0.073	0.42
Phenol	0.37	U	0.045	0.37	0.37	U	0.046	0.37	0.42	U	0.052	0.42
Pyrene	0.37	U	0.064	0.37	0.37	U	0.065	0.37	0.42	U	0.073	0.42
Total Confident Conc.	0.039				0				0			
Total Estimated Conc. (TICs)	5.8				0				0.83			

NR: Not analyzed.

U: Indicates the analyte was analyzed for but

Generated on 10/23/2009 8:55:44 AM

TestAmerica

SUMMARY OF ANALYTICAL RESULTS: 460-

Sample ID	NVF-SB-07-AA				NVF-SB-10-AA			
Lab Sample No.	460-6950-28				460-6950-29			
Sampling Date	10/15/2009 4:00:00 PM				10/15/2009 4:00:00 PM			
Matrix	Solid				Solid			
Dilution Factor	5				2			
Units	mg/kg				mg/kg			
SEMIVOLATILE COMPOUNDS (GC/MS)			MDL	PQL			MDL	PQL
1,1'-Biphenyl	0.58	J	0.32	1.9	1.0	U	0.17	1.0
2,2'-oxybis[1-chloropropane]	1.9	U	0.26	1.9	1.0	U	0.13	1.0
2,4,5-Trichlorophenol	1.9	U	0.38	1.9	1.0	U	0.20	1.0
2,4,6-Trichlorophenol	1.9	U	0.35	1.9	1.0	U	0.18	1.0
2,4-Dichlorophenol	1.9	U	0.31	1.9	1.0	U	0.16	1.0
2,4-Dimethylphenol	1.9	U	0.31	1.9	1.0	U	0.16	1.0
2,4-Dinitrophenol	5.9	U	0.41	5.9	3.1	U	0.22	3.1
2,4-Dinitrotoluene	0.40	U	0.057	0.40	0.21	U	0.030	0.21
2,6-Dinitrotoluene	0.40	U	0.050	0.40	0.21	U	0.026	0.21
2-Chloronaphthalene	1.9	U	0.28	1.9	1.0	U	0.14	1.0
2-Chlorophenol	1.9	U	0.26	1.9	1.0	U	0.14	1.0
2-Methylnaphthalene	1.8	J	0.29	1.9	0.38	J	0.15	1.0
2-Methylphenol	1.9	U	0.28	1.9	1.0	U	0.15	1.0
2-Nitroaniline	4.0	U	0.53	4.0	2.1	U	0.28	2.1
2-Nitrophenol	1.9	U	0.32	1.9	1.0	U	0.17	1.0
3,3'-Dichlorobenzidine	4.0	U	0.43	4.0	2.1	U	0.23	2.1
3-Nitroaniline	4.0	U	0.44	4.0	2.1	U	0.23	2.1
4,6-Dinitro-2-methylphenol	5.9	U	0.93	5.9	3.1	U	0.49	3.1
4-Bromophenyl phenyl ether	1.9	U	0.35	1.9	1.0	U	0.18	1.0
4-Chloro-3-methylphenol	1.9	U	0.33	1.9	1.0	U	0.17	1.0
4-Chloroaniline	1.9	U	0.25	1.9	1.0	U	0.13	1.0
4-Chlorophenyl phenyl ether	1.9	U	0.34	1.9	1.0	U	0.18	1.0
4-Methylphenol	1.9	U	0.32	1.9	1.0	U	0.17	1.0
4-Nitroaniline	4.0	U	0.40	4.0	2.1	U	0.21	2.1
4-Nitrophenol	5.9	U	0.50	5.9	3.1	U	0.26	3.1

TestAmerica

SUMMARY OF ANALYTICAL RESULTS: 460-

Sample ID	NVF-SB-07-AA				NVF-SB-10-AA			
Lab Sample No.	460-6950-28				460-6950-29			
Sampling Date	10/15/2009 4:00:00 PM				10/15/2009 4:00:00 PM			
Matrix	Solid				Solid			
Dilution Factor	5				2			
Units	mg/kg				mg/kg			
SEMIVOLATILE COMPOUNDS (GC/MS)			MDL	PQL			MDL	PQL
Acenaphthene	6.1		0.28	1.9	1.3		0.15	1.0
Acenaphthylene	1.9	U	0.28	1.9	1.0	U	0.15	1.0
Acetophenone	1.9	U	0.29	1.9	1.0	U	0.15	1.0
Anthracene	11		0.34	1.9	2.1		0.18	1.0
Atrazine	1.9	U	0.36	1.9	1.0	U	0.19	1.0
Benzaldehyde	1.9	U	0.12	1.9	1.0	U	0.064	1.0
Benzo[a]anthracene	20		0.036	0.19	5.6		0.019	0.10
Benzo[a]pyrene	16		0.024	0.19	5.0		0.013	0.10
Benzo[b]fluoranthene	19		0.029	0.19	6.3		0.015	0.10
Benzo[g,h,i]perylene	8.1		0.21	1.9	3.0		0.11	1.0
Benzo[k]fluoranthene	7.3		0.027	0.19	2.3		0.014	0.10
Bis(2-chloroethoxy)methane	1.9	U	0.28	1.9	1.0	U	0.15	1.0
Bis(2-chloroethyl)ether	0.19	U	0.041	0.19	0.10	U	0.021	0.10
Bis(2-ethylhexyl) phthalate	1.9	U	0.26	1.9	0.22	J	0.14	1.0
Butyl benzyl phthalate	1.9	U	0.23	1.9	1.0	U	0.12	1.0
Caprolactam	1.9	U	0.27	1.9	1.0	U	0.14	1.0
Carbazole	6.2		0.31	1.9	1.4		0.16	1.0
Chrysene	20		0.28	1.9	5.8		0.15	1.0
Dibenz(a,h)anthracene	3.1		0.023	0.19	1.0		0.012	0.10
Dibenzofuran	4.6		0.29	1.9	0.79	J	0.15	1.0
Diethyl phthalate	1.9	U	0.26	1.9	1.0	U	0.14	1.0
Dimethyl phthalate	1.9	U	0.26	1.9	1.0	U	0.14	1.0
Di-n-butyl phthalate	1.9	U	0.30	1.9	1.0	U	0.16	1.0
Di-n-octyl phthalate	1.9	U	0.23	1.9	1.0	U	0.12	1.0
Fluoranthene	40		0.32	1.9	12		0.17	1.0

TestAmerica

SUMMARY OF ANALYTICAL RESULTS: 460-

Sample ID	NVF-SB-07-AA				NVF-SB-10-AA			
Lab Sample No.	460-6950-28				460-6950-29			
Sampling Date	10/15/2009 4:00:00 PM				10/15/2009 4:00:00 PM			
Matrix	Solid				Solid			
Dilution Factor	5				2			
Units	mg/kg				mg/kg			
SEMIVOLATILE COMPOUNDS (GC/MS)			MDL	PQL			MDL	PQL
Fluorene	5.4		0.33	1.9	1.0		0.17	1.0
Hexachlorobenzene	0.19	U	0.027	0.19	0.10	U	0.014	0.10
Hexachlorobutadiene	0.40	U	0.079	0.40	0.21	U	0.041	0.21
Hexachlorocyclopentadiene	1.9	U	0.57	1.9	1.0	U	0.30	1.0
Hexachloroethane	0.19	U	0.033	0.19	0.10	U	0.017	0.10
Indeno[1,2,3-cd]pyrene	10		0.031	0.19	3.6		0.016	0.10
Isophorone	1.9	U	0.22	1.9	1.0	U	0.12	1.0
Naphthalene	2.0		0.29	1.9	0.65	J	0.15	1.0
Nitrobenzene	0.19	U	0.044	0.19	0.10	U	0.023	0.10
N-Nitrosodi-n-propylamine	0.19	U	0.026	0.19	0.10	U	0.013	0.10
N-Nitrosodiphenylamine	1.9	U	0.32	1.9	1.0	U	0.17	1.0
Pentachlorophenol	5.9	U	0.95	5.9	3.1	U	0.50	3.1
Phenanthrene	32		0.34	1.9	7.8		0.18	1.0
Phenol	1.9	U	0.24	1.9	1.0	U	0.12	1.0
Pyrene	23		0.34	1.9	5.8		0.18	1.0
Total Confident Conc.	233.8				64			
Total Estimated Conc. (TICs)	50.2				55.03			

NR: Not analyzed.

U: Indicates the analyte was analyzed for but

Generated on 10/23/2009 8:55:44 AM

SUMMARY OF ANALYTICAL RESULTS: 460-6950-1

Sample ID	NVF-SB-15-A			
Lab Sample No.	460-6950-7			
Sampling Date	10/15/2009 1:40:00 PM			
Matrix	Solid			
Dilution Factor	1			
Units	mg/kg			
PESTICIDES/PCBs			MDL	PQL
4,4'-DDD	0.0073	U	0.00087	0.0073
4,4'-DDE	0.0073	U	0.0014	0.0073
4,4'-DDT	0.0073	U	0.00091	0.0073
Aldrin	0.0073	U	0.0016	0.0073
alpha-BHC	0.0073	U	0.0013	0.0073
alpha-Chlordane	0.0073	U	0.0015	0.0073
beta-BHC	0.0073	U	0.00099	0.0073
delta-BHC	0.0073	U	0.0011	0.0073
Dieldrin	0.0073	U	0.0014	0.0073
Endosulfan I	0.0073	U	0.0015	0.0073
Endosulfan II	0.0073	U	0.0011	0.0073
Endosulfan sulfate	0.0073	U	0.00093	0.0073
Endrin	0.0073	U	0.001	0.0073
Endrin aldehyde	0.0073	U	0.0018	0.0073
Endrin ketone	0.0073	U	0.0011	0.0073
gamma-BHC (Lindane)	0.0073	U	0.00085	0.0073
gamma-Chlordane	0.0073	U	0.0015	0.0073
Heptachlor	0.0073	U	0.001	0.0073
Heptachlor epoxide	0.0073	U	0.0015	0.0073
Methoxychlor	0.0073	U	0.00081	0.0073
Toxaphene	0.073	U	0.015	0.073

SUMMARY OF ANALYTICAL RESULTS: 460-6950-1

Sample ID	NVF-SB-15-A			
Lab Sample No.	460-6950-7			
Sampling Date	10/15/2009 1:40:00 PM			
Matrix	Solid			
Dilution Factor	1			
Units	mg/kg			
PESTICIDES/PCBs			MDL	PQL

NR: Not analyzed.

U: Indicates the analyte was analyzed for but not detected.

Generated on 10/23/2009 8:55:44 AM

SUMMARY OF ANALYTICAL RESULTS: 460-6950-1

Sample ID	NVF-SB-15-A			
Lab Sample No.	460-6950-7			
Sampling Date	10/15/2009 1:40:00 PM			
Matrix	Solid			
Dilution Factor	1			
Units	mg/kg			
PESTICIDES/PCBs			MDL	PQL
PCB-1016	0.073	U	0.014	0.073
PCB-1221	0.073	U	0.022	0.073
PCB-1232	0.073	U	0.041	0.073
PCB-1242	0.073	U	0.014	0.073
PCB-1248	0.073	U	0.019	0.073
PCB-1254	0.073	U	0.025	0.073
PCB-1260	0.073	U	0.0081	0.073

NR: Not analyzed.

U: Indicates the analyte was analyzed for but not detected.

Generated on 10/23/2009 8:55:45 AM

TestAmerica

SUMMARY OF ANALYTICAL RESULTS: 460-6950-1

Sample ID	NVF-SB-28-B				NVF-SB-24-B				NVF-SB-37-A			
Lab Sample No.	460-6950-16				460-6950-18				460-6950-22			
Sampling Date	10/15/2009 11:10:00 AM				10/15/2009 11:30:00 AM				10/15/2009 8:35:00 AM			
Matrix	Solid				Solid				Solid			
Dilution Factor												
Units	mg/Kg				mg/Kg				mg/Kg			
METALS			MDL	PQL			MDL	PQL			MDL	PQL
Aluminum	8580		20.5	56.0	9830		18.7	51.0	16100		16.0	43.8
Antimony	2.8	U	1.2	2.8	2.5	U	1.1	2.5	2.2	U	0.96	2.2
Arsenic	1.1	J	0.98	1.4	0.98	J	0.89	1.3	12.9		0.76	1.1
Barium	69.0		1.7	56.0	66.1		1.5	51.0	150		1.3	43.8
Beryllium	0.50	J	0.25	0.56	0.57		0.22	0.51	0.68		0.19	0.44
Cadmium	1.4	U	0.22	1.4	1.3	U	0.20	1.3	1.1	U	0.17	1.1
Calcium	1740		36.8	1400	1610		33.5	1270	30100		28.8	1090
Chromium	17.6		1.7	2.8	23.1		1.5	2.5	30.8		1.3	2.2
Cobalt	4.6	J	1.7	14.0	3.8	J	1.6	12.7	13.0		1.3	10.9
Copper	7.2		1.1	7.0	7.2		1.0	6.4	33.5		0.89	5.5
Iron	10100		14.9	42.0	8080		13.5	38.2	28100		11.6	32.8
Lead	3.8		0.70	1.4	4.7		0.64	1.3	19.5		0.55	1.1
Magnesium	2210		14.8	1400	2430		13.5	1270	16700		11.6	1090
Manganese	128		1.6	4.2	52.1		1.4	3.8	429		1.2	3.3
Mercury	0.041	U	0.032	0.041	0.070		0.032	0.041	0.031	J	0.027	0.035
Nickel	8.7	J	0.75	11.2	8.4	J	0.68	10.2	41.0		0.59	8.8
Potassium	886	J	63.2	1400	1190	J	57.5	1270	3880		49.4	1090
Selenium	2.8	U	1.3	2.8	2.5	U	1.2	2.5	1.4	J	1.0	2.2
Silver	2.8	U	0.21	2.8	2.5	U	0.19	2.5	0.33	J	0.17	2.2
Sodium	1400	U	86.0	1400	1270	U	78.3	1270	129	J	67.2	1090
Thallium	2.8	U	1.4	2.8	2.5	U	1.2	2.5	2.2	U	1.1	2.2
Vanadium	22.8		0.73	14.0	17.1		0.66	12.7	62.0		0.57	10.9

SUMMARY OF ANALYTICAL RESULTS: 460-6950-1

Sample ID	NVF-SB-28-B				NVF-SB-24-B				NVF-SB-37-A			
Lab Sample No.	460-6950-16				460-6950-18				460-6950-22			
Sampling Date	10/15/2009 11:10:00 AM				10/15/2009 11:30:00 AM				10/15/2009 8:35:00 AM			
Matrix	Solid				Solid				Solid			
Dilution Factor												
Units	mg/Kg				mg/Kg				mg/Kg			
METALS			MDL	PQL			MDL	PQL			MDL	PQL
Zinc	35.8		1.4	8.4	44.6		1.2	7.6	55.1		1.1	6.6

NR: Not analyzed.

J: Result is less than the RL but greater than or equal to the MDL and the concentration is an approximate value.

U: Indicates the analyte was analyzed for but not detected.

Generated on 10/23/2009 8:55:45 AM

TestAmerica

SUMMARY OF ANALYTICA

Sample ID	NVF-SB-37-B				NVF-SB-51-A				NVF-SB-51-B			
Lab Sample No.	460-6950-23				460-6950-24				460-6950-25			
Sampling Date	10/15/2009 8:40:00 AM				10/15/2009 10:35:00 AM				10/15/2009 10:40:00 AM			
Matrix	Solid				Solid				Solid			
Dilution Factor												
Units	mg/Kg				mg/Kg				mg/Kg			
METALS			MDL	PQL			MDL	PQL			MDL	PQL
Aluminum	13200		23.0	62.7	15000		15.5	42.4	26000		18.0	49.1
Antimony	3.1	U	1.4	3.1	2.1	U	0.93	2.1	2.5	U	1.1	2.5
Arsenic	5.9		1.1	1.6	1.9		0.74	1.1	1.5		0.85	1.2
Barium	121		1.9	62.7	150		1.3	42.4	102		1.5	49.1
Beryllium	0.75		0.28	0.63	0.85		0.19	0.42	1.0		0.22	0.49
Cadmium	0.77	J	0.24	1.6	2.1		0.17	1.1	1.2	U	0.19	1.2
Calcium	1460	J	41.2	1570	48300		27.8	1060	6890		32.2	1230
Chromium	41.2		1.9	3.1	781		1.3	2.1	102		1.5	2.5
Cobalt	5.7	J	1.9	15.7	5.2	J	1.3	10.6	10.7	J	1.5	12.3
Copper	46.7		1.3	7.8	54.5		0.86	5.3	14.7		1.0	6.1
Iron	14400		16.6	47.0	34200		11.2	31.8	29000		13.0	36.8
Lead	6.3		0.78	1.6	183		0.53	1.1	12.6		0.61	1.2
Magnesium	2270		16.6	1570	12700		11.2	1060	6640		13.0	1230
Manganese	131		1.8	4.7	5560		1.2	3.2	941		1.4	3.7
Mercury	0.051	U	0.040	0.051	0.034		0.026	0.033	0.032	J	0.031	0.039
Nickel	14.6		0.84	12.5	33.2		0.57	8.5	23.2		0.66	9.8
Potassium	930	J	70.7	1570	736	J	47.8	1060	1440		55.4	1230
Selenium	2.3	J	1.5	3.1	3.5		0.99	2.1	1.5	J	1.1	2.5
Silver	3.1	U	0.24	3.1	3.1		0.16	2.1	0.67	J	0.19	2.5
Sodium	97.5	J	96.2	1570	181	J	65.0	1060	219	J	75.3	1230
Thallium	3.1	U	1.5	3.1	2.6	U	1.3	2.6	2.5	U	1.2	2.5
Vanadium	26.2		0.81	15.7	128		0.55	10.6	66.1		0.64	12.3

TestAmerica

SUMMARY OF ANALYTICA

Sample ID	NVF-SB-37-B				NVF-SB-51-A				NVF-SB-51-B			
Lab Sample No.	460-6950-23				460-6950-24				460-6950-25			
Sampling Date	10/15/2009 8:40:00 AM				10/15/2009 10:35:00 AM				10/15/2009 10:40:00 AM			
Matrix	Solid				Solid				Solid			
Dilution Factor												
Units	mg/Kg				mg/Kg				mg/Kg			
METALS			MDL	PQL			MDL	PQL			MDL	PQL
Zinc	53.0		1.5	9.4	632		1.0	6.4	127		1.2	7.4

NR: Not analyzed.

J: Result is less than the R

U: Indicates the analyte wa

Generated on 10/23/2009 8:5

TestAmerica

SUMMARY OF ANALYTICA

Sample ID	NVF-SB-07-AA				NVF-SB-10-AA				NVF-SB-16-A				NVF-SB-15-A	
Lab Sample No.	460-6950-28				460-6950-29				460-6950-3				460-6950-7	
Sampling Date	10/15/2009 4:00:00 PM				10/15/2009 4:00:00 PM				10/15/2009 1:45:00 PM				10/15/2009 1:40:00 PM	
Matrix	Solid				Solid				Solid				Solid	
Dilution Factor														
Units	mg/Kg				mg/Kg				mg/Kg				mg/Kg	
METALS			MDL	PQL			MDL	PQL			MDL	PQL		
Aluminum	5540		16.2	44.2	14300		22.6	61.6	28300		18.2	49.5	11700	
Antimony	7.5		0.97	2.2	3.1	U	1.4	3.1	2.5	U	1.1	2.5	2.1	U
Arsenic	2.9		0.77	1.1	11.2		1.1	1.5	5.9		0.86	1.2	1.9	
Barium	158		1.3	44.2	134		1.9	61.6	312		1.5	49.5	133	
Beryllium	0.34	J	0.19	0.44	0.87		0.27	0.62	1.5		0.22	0.50	0.45	
Cadmium	3.2		0.17	1.1	1.5	U	0.24	1.5	1.2	U	0.19	1.2	1.1	U
Calcium	4050		29.1	1110	3710		40.5	1540	1630		32.6	1240	593	J
Chromium	37.8		1.3	2.2	1670		1.8	3.1	113		1.5	2.5	18.3	
Cobalt	3.2	J	1.4	11.1	19.5		1.9	15.4	17.4		1.5	12.4	5.2	J
Copper	674		0.90	5.5	422		1.3	7.7	31.6		1.0	6.2	8.0	
Iron	15800		11.7	33.2	179000		81.7	231	44800		13.1	37.2	16400	
Lead	786		0.55	1.1	258		0.77	1.5	9.1		0.62	1.2	7.0	
Magnesium	2190		11.7	1110	3900		16.3	1540	12200		13.1	1240	2360	
Manganese	234		1.2	3.3	1390		1.7	4.6	193		1.4	3.7	66.0	
Mercury	1.2		0.029	0.037	0.39		0.038	0.048	0.040	U	0.032	0.040	0.032	U
Nickel	21.9		0.59	8.8	155		0.83	12.3	63.2		0.66	9.9	9.3	
Potassium	1030	J	49.9	1110	892	J	69.5	1540	10100		55.9	1240	994	J
Selenium	2.2	U	1.0	2.2	6.9		1.4	3.1	1.5	J	1.2	2.5	2.1	U
Silver	1.2	J	0.17	2.2	1.4	J	0.23	3.1	0.36	J	0.19	2.5	2.1	U
Sodium	1110	U	67.9	1110	220	J	94.6	1540	110	J	76.1	1240	1060	U
Thallium	2.2	U	1.1	2.2	3.8	U	1.9	3.8	2.5	U	1.2	2.5	2.1	U
Vanadium	31.5		0.57	11.1	69.2		0.80	15.4	109		0.64	12.4	27.0	

TestAmerica

SUMMARY OF ANALYTICA

Sample ID	NVF-SB-07-AA				NVF-SB-10-AA				NVF-SB-16-A				NVF-SB-15-A	
Lab Sample No.	460-6950-28				460-6950-29				460-6950-3				460-6950-7	
Sampling Date	10/15/2009 4:00:00 PM				10/15/2009 4:00:00 PM				10/15/2009 1:45:00 PM				10/15/2009 1:40:00 PM	
Matrix	Solid				Solid				Solid				Solid	
Dilution Factor														
Units	mg/Kg				mg/Kg				mg/Kg				mg/Kg	
METALS			MDL	PQL			MDL	PQL			MDL	PQL		
Zinc	9600		1.1	6.6	701		1.5	9.2	179		1.2	7.4	83.6	

NR: Not analyzed.

J: Result is less than the R

U: Indicates the analyte wa

Generated on 10/23/2009 8:5

TestAmerica

SUMMARY OF ANALYTICA

Sample ID		
Lab Sample No.		
Sampling Date		
Matrix		
Dilution Factor		
Units		
METALS	MDL	PQL
Aluminum	15.6	42.6
Antimony	0.94	2.1
Arsenic	0.74	1.1
Barium	1.3	42.6
Beryllium	0.19	0.43
Cadmium	0.17	1.1
Calcium	28.0	1060
Chromium	1.3	2.1
Cobalt	1.3	10.6
Copper	0.87	5.3
Iron	11.3	31.9
Lead	0.53	1.1
Magnesium	11.3	1060
Manganese	1.2	3.2
Mercury	0.025	0.032
Nickel	0.57	8.5
Potassium	48.0	1060
Selenium	1.0	2.1
Silver	0.16	2.1
Sodium	65.4	1060
Thallium	1.0	2.1
Vanadium	0.55	10.6

TestAmerica

SUMMARY OF ANALYTICA

Sample ID		
Lab Sample No.		
Sampling Date		
Matrix		
Dilution Factor		
Units		
METALS	MDL	PQL
Zinc	1.0	6.4

NR: Not analyzed.

J: Result is less than the R

U: Indicates the analyte wa

Generated on 10/23/2009 8:5

SUMMARY OF ANALYTICAL RESULTS: 460-6950-1

Sample ID	NVF-SB-18-A				NVF-SB-14-B				NVF-SB-01-B			
Lab Sample No.	460-6950-1				460-6950-10				460-6950-11			
Sampling Date	10/15/2009 1:30:00 PM				10/15/2009 1:55:00 PM				10/15/2009 10:30:00 AM			
Matrix	Solid				Solid				Solid			
Dilution Factor												
Units												
WET CHEMISTRY			MDL	PQL			MDL	PQL			MDL	PQL
Percent Moisture (%)	8.2		1.0	1.0	24.4		1.0	1.0	20.2		1.0	1.0
Percent Solids (%)	91.8		1.0	1.0	75.6		1.0	1.0	79.8		1.0	1.0
Cyanide, Total (mg/Kg)	NR				NR				NR			

NR: Not analyzed.

U: Indicates the analyte was analyzed for but not detected.

Generated on 10/23/2009 8:55:46 AM

TestAmerica

SUMMARY OF ANALYTICAL RESULTS: 460-

Sample ID	NVF-SB-02-B				NVF-SB-03-B				NVF-SB-05-B			
Lab Sample No.	460-6950-12				460-6950-13				460-6950-14			
Sampling Date	10/15/2009 10:00:00 AM				10/15/2009 10:10:00 AM				10/15/2009 9:30:00 AM			
Matrix	Solid				Solid				Solid			
Dilution Factor												
Units												
WET CHEMISTRY			MDL	PQL			MDL	PQL			MDL	PQL
Percent Moisture (%)	19.4		1.0	1.0	22.1		1.0	1.0	22.9		1.0	1.0
Percent Solids (%)	80.6		1.0	1.0	77.9		1.0	1.0	77.1		1.0	1.0
Cyanide, Total (mg/Kg)	NR				NR				NR			

NR: Not analyzed.

U: Indicates the analyte was analyzed for but

Generated on 10/23/2009 8:55:46 AM

TestAmerica

SUMMARY OF ANALYTICAL RESULTS: 460-

Sample ID	NVF-SB-06-B				NVF-SB-28-B				NVF-SB-25-B			
Lab Sample No.	460-6950-15				460-6950-16				460-6950-17			
Sampling Date	10/15/2009 9:45:00 AM				10/15/2009 11:10:00 AM				10/15/2009 11:15:00 AM			
Matrix	Solid				Solid				Solid			
Dilution Factor												
Units												
WET CHEMISTRY			MDL	PQL			MDL	PQL			MDL	PQL
Percent Moisture (%)	20.0		1.0	1.0	28.6		1.0	1.0	24.8		1.0	1.0
Percent Solids (%)	80.0		1.0	1.0	71.4		1.0	1.0	75.2		1.0	1.0
Cyanide, Total (mg/Kg)	NR				NR				NR			

NR: Not analyzed.

U: Indicates the analyte was analyzed for but

Generated on 10/23/2009 8:55:46 AM

TestAmerica

SUMMARY OF ANALYTICAL RESULTS: 460-

Sample ID	NVF-SB-24-B				NVF-SB-21-B				NVF-SB-18-B			
Lab Sample No.	460-6950-18				460-6950-19				460-6950-2			
Sampling Date	10/15/2009 11:30:00 AM				10/15/2009 11:35:00 AM				10/15/2009 1:35:00 PM			
Matrix	Solid				Solid				Solid			
Dilution Factor												
Units												
WET CHEMISTRY			MDL	PQL			MDL	PQL			MDL	PQL
Percent Moisture (%)	26.0		1.0	1.0	14.5		1.0	1.0	27.1		1.0	1.0
Percent Solids (%)	74.0		1.0	1.0	85.5		1.0	1.0	72.9		1.0	1.0
Cyanide, Total (mg/Kg)	NR				NR				NR			

NR: Not analyzed.

U: Indicates the analyte was analyzed for but

Generated on 10/23/2009 8:55:46 AM

TestAmerica

SUMMARY OF ANALYTICAL RESULTS: 460-

Sample ID	NVF-SB-36-A				NVF-SB-36-B				NVF-SB-37-A			
Lab Sample No.	460-6950-20				460-6950-21				460-6950-22			
Sampling Date	10/15/2009 8:30:00 AM				10/15/2009 8:30:00 AM				10/15/2009 8:35:00 AM			
Matrix	Solid				Solid				Solid			
Dilution Factor												
Units												
WET CHEMISTRY			MDL	PQL			MDL	PQL			MDL	PQL
Percent Moisture (%)	12.3		1.0	1.0	14.3		1.0	1.0	10.4		1.0	1.0
Percent Solids (%)	87.7		1.0	1.0	85.7		1.0	1.0	89.6		1.0	1.0
Cyanide, Total (mg/Kg)	NR				NR				NR			

NR: Not analyzed.

U: Indicates the analyte was analyzed for but

Generated on 10/23/2009 8:55:46 AM

TestAmerica

SUMMARY OF ANALYTICAL RESULTS: 460-

Sample ID	NVF-SB-37-B				NVF-SB-51-A				NVF-SB-51-B			
Lab Sample No.	460-6950-23				460-6950-24				460-6950-25			
Sampling Date	10/15/2009 8:40:00 AM				10/15/2009 10:35:00 AM				10/15/2009 10:40:00 AM			
Matrix	Solid				Solid				Solid			
Dilution Factor												
Units												
WET CHEMISTRY			MDL	PQL			MDL	PQL			MDL	PQL
Percent Moisture (%)	38.6		1.0	1.0	11.8		1.0	1.0	21.6		1.0	1.0
Percent Solids (%)	61.4		1.0	1.0	88.2		1.0	1.0	78.4		1.0	1.0
Cyanide, Total (mg/Kg)	NR				NR				NR			

NR: Not analyzed.

U: Indicates the analyte was analyzed for but

Generated on 10/23/2009 8:55:46 AM

TestAmerica

SUMMARY OF ANALYTICAL RESULTS: 460-

Sample ID	NVF-SB-914-A				NVF-SB-936-A				NVF-SB-07-AA			
Lab Sample No.	460-6950-26				460-6950-27				460-6950-28			
Sampling Date	10/15/2009 1:50:00 PM				10/15/2009 8:30:00 AM				10/15/2009 4:00:00 PM			
Matrix	Solid				Solid				Solid			
Dilution Factor												
Units												
WET CHEMISTRY			MDL	PQL			MDL	PQL			MDL	PQL
Percent Moisture (%)	15.4		1.0	1.0	12.7		1.0	1.0	15.4		1.0	1.0
Percent Solids (%)	84.6		1.0	1.0	87.3		1.0	1.0	84.6		1.0	1.0
Cyanide, Total (mg/Kg)	NR				NR				NR			

NR: Not analyzed.

U: Indicates the analyte was analyzed for but

Generated on 10/23/2009 8:55:46 AM

TestAmerica

SUMMARY OF ANALYTICAL RESULTS: 460-

Sample ID	NVF-SB-10-AA				NVF-SB-16-A				NVF-SB-16-B			
Lab Sample No.	460-6950-29				460-6950-3				460-6950-4			
Sampling Date	10/15/2009 4:00:00 PM				10/15/2009 1:45:00 PM				10/15/2009 1:45:00 PM			
Matrix	Solid				Solid				Solid			
Dilution Factor												
Units												
WET CHEMISTRY			MDL	PQL			MDL	PQL			MDL	PQL
Percent Moisture (%)	35.1		1.0	1.0	21.6		1.0	1.0	27.4		1.0	1.0
Percent Solids (%)	64.9		1.0	1.0	78.4		1.0	1.0	72.6		1.0	1.0
Cyanide, Total (mg/Kg)	NR				NR				NR			

NR: Not analyzed.

U: Indicates the analyte was analyzed for but

Generated on 10/23/2009 8:55:46 AM

TestAmerica

SUMMARY OF ANALYTICAL RESULTS: 460-

Sample ID	NVF-SB-17-A				NVF-SB-17-B				NVF-SB-15-A			
Lab Sample No.	460-6950-5				460-6950-6				460-6950-7			
Sampling Date	10/15/2009 1:15:00 PM				10/15/2009 1:20:00 PM				10/15/2009 1:40:00 PM			
Matrix	Solid				Solid				Solid			
Dilution Factor												
Units												
WET CHEMISTRY			MDL	PQL			MDL	PQL			MDL	PQL
Percent Moisture (%)	11.4		1.0	1.0	43.4		1.0	1.0	7.9		1.0	1.0
Percent Solids (%)	88.6		1.0	1.0	56.6		1.0	1.0	92.1		1.0	1.0
Cyanide, Total (mg/Kg)	NR				NR				0.54	U	0.12	0.54

NR: Not analyzed.

U: Indicates the analyte was analyzed for but

Generated on 10/23/2009 8:55:46 AM

SUMMARY OF ANALYTICAL RESULTS: 460-

Sample ID	NVF-SB-15-B				NVF-SB-14-A			
Lab Sample No.	460-6950-8				460-6950-9			
Sampling Date	10/15/2009 1:43:00 PM				10/15/2009 1:55:00 PM			
Matrix	Solid				Solid			
Dilution Factor								
Units								
WET CHEMISTRY			MDL	PQL			MDL	PQL
Percent Moisture (%)	23.5		1.0	1.0	26.0		1.0	1.0
Percent Solids (%)	76.5		1.0	1.0	74.0		1.0	1.0
Cyanide, Total (mg/Kg)	NR				NR			

NR: Not analyzed.

U: Indicates the analyte was analyzed for but

Generated on 10/23/2009 8:55:46 AM

SUMMARY OF ANALYTICAL RESULTS: 460-6957-1

Sample ID	NVF-SB-06-A			
Lab Sample No.	460-6957-8			
Sampling Date	10/13/2009 2:25:00 AM			
Matrix	Solid			
Dilution Factor	50			
Units	mg/kg			
VOLATILE COMPOUNDS (GC/MS)			MDL	PQL
1,1,1-Trichloroethane	0.15	U	0.037	0.15
1,1,2,2-Tetrachloroethane	0.15	U	0.013	0.15
1,1,2-Trichloro-1,2,2-trifluoroethane	0.15	U	0.043	0.15
1,1,2-Trichloroethane	0.15	U	0.015	0.15
1,1-Dichloroethane	0.15	U	0.015	0.15
1,1-Dichloroethene	0.15	U	0.021	0.15
1,2,4-Trichlorobenzene	0.15	U	0.066	0.15
1,2-Dibromo-3-Chloropropane	0.15	U	0.023	0.15
1,2-Dibromoethane	0.15	U	0.014	0.15
1,2-Dichlorobenzene	0.15	U	0.024	0.15
1,2-Dichloroethane	0.15	U	0.037	0.15
1,2-Dichloropropane	0.15	U	0.013	0.15
1,3-Dichlorobenzene	0.15	U	0.034	0.15
1,4-Dichlorobenzene	0.15	U	0.023	0.15
2-Butanone (MEK)	1.5	U	0.12	1.5
2-Hexanone	1.5	U	0.082	1.5
4-Methyl-2-pentanone (MIBK)	1.5	U	0.10	1.5
Acetone	1.5	U	0.37	1.5
Benzene	0.15	U	0.018	0.15
Bromoform	0.15	U	0.015	0.15
Bromomethane	0.15	U	0.047	0.15
Carbon disulfide	0.15	U	0.022	0.15

SUMMARY OF ANALYTICAL RESULTS: 460-6957-1

Sample ID	NVF-SB-06-A			
Lab Sample No.	460-6957-8			
Sampling Date	10/13/2009 2:25:00 AM			
Matrix	Solid			
Dilution Factor	50			
Units	mg/kg			
VOLATILE COMPOUNDS (GC/MS)			MDL	PQL
Carbon tetrachloride	0.15	U	0.027	0.15
Chlorobenzene	0.15	U	0.025	0.15
Chlorodibromomethane	0.15	U	0.015	0.15
Chloroethane	0.15	U	0.067	0.15
Chloroform	0.15	U	0.023	0.15
Chloromethane	0.15	U	0.032	0.15
cis-1,2-Dichloroethene	0.15	U	0.029	0.15
cis-1,3-Dichloropropene	0.15	U	0.015	0.15
Cyclohexane	0.11	J	0.019	0.15
Dichlorobromomethane	0.15	U	0.013	0.15
Dichlorodifluoromethane	0.15	U	0.043	0.15
Ethylbenzene	0.15	U	0.037	0.15
Isopropylbenzene	0.15	U	0.032	0.15
Methyl acetate	0.30	U	0.049	0.30
Methyl tert-butyl ether	0.15	U	0.028	0.15
Methylcyclohexane	0.47		0.012	0.15
Methylene Chloride	0.15	U	0.029	0.15
Styrene	0.15	U	0.021	0.15
Tetrachloroethene	0.15	U	0.029	0.15
Toluene	0.15	U	0.014	0.15
trans-1,2-Dichloroethene	0.15	U	0.021	0.15
trans-1,3-Dichloropropene	0.15	U	0.018	0.15

SUMMARY OF ANALYTICAL RESULTS: 460-6957-1

Sample ID	NVF-SB-06-A			
Lab Sample No.	460-6957-8			
Sampling Date	10/13/2009 2:25:00 AM			
Matrix	Solid			
Dilution Factor	50			
Units	mg/kg			
VOLATILE COMPOUNDS (GC/MS)			MDL	PQL
Trichloroethene	0.15	U	0.027	0.15
Trichlorofluoromethane	0.15	U	0.024	0.15
Vinyl chloride	0.15	U	0.018	0.15
Xylenes, Total	0.45	U	0.065	0.45
Total Confident Conc.	0.47			
Total Estimated Conc. (TICs)	0			

NR: Not analyzed.

Generated on 10/23/2009 11:53:44 AM

TestAmerica

SUMMARY OF ANALYTICAL RESULTS: 460-6957-1

Sample ID	NVF-SB-06-A				NVF-SB-10-A				NVF-SB-24-A			
Lab Sample No.	460-6957-8				460-6957-10				460-6957-12			
Sampling Date	10/13/2009 2:25:00 AM				10/13/2009 10:34:00 AM				10/13/2009 11:30:00 AM			
Matrix	Solid				Solid				Solid			
Dilution Factor	1				1				1			
Units	mg/kg				mg/kg				mg/kg			
SEMIVOLATILE COMPOUNDS (GC/MS)			MDL	PQL			MDL	PQL			MDL	PQL
1,1'-Biphenyl	0.40	U	0.066	0.40	0.55	U	0.091	0.55	0.38	U	0.063	0.38
2,2'-oxybis[1-chloropropane]	0.40	U	0.052	0.40	0.55	U	0.072	0.55	0.38	U	0.050	0.38
2,4,5-Trichlorophenol	0.40	U	0.077	0.40	0.55	U	0.11	0.55	0.38	U	0.074	0.38
2,4,6-Trichlorophenol	0.40	U	0.072	0.40	0.55	U	0.099	0.55	0.38	U	0.069	0.38
2,4-Dichlorophenol	0.40	U	0.064	0.40	0.55	U	0.088	0.55	0.38	U	0.062	0.38
2,4-Dimethylphenol	0.40	U	0.064	0.40	0.55	U	0.088	0.55	0.38	U	0.062	0.38
2,4-Dinitrophenol	1.2	U	0.085	1.2	1.7	U	0.12	1.7	1.2	U	0.082	1.2
2,4-Dinitrotoluene	0.081	U	0.012	0.081	0.11	U	0.016	0.11	0.078	U	0.011	0.078
2,6-Dinitrotoluene	0.081	U	0.010	0.081	0.11	U	0.014	0.11	0.078	U	0.0098	0.078
2-Chloronaphthalene	0.40	U	0.056	0.40	0.55	U	0.078	0.55	0.38	U	0.054	0.38
2-Chlorophenol	0.40	U	0.053	0.40	0.55	U	0.074	0.55	0.38	U	0.051	0.38
2-Methylnaphthalene	0.40	U	0.058	0.40	0.24	J	0.080	0.55	0.38	U	0.056	0.38
2-Methylphenol	0.40	U	0.058	0.40	0.55	U	0.079	0.55	0.38	U	0.055	0.38
2-Nitroaniline	0.81	U	0.11	0.81	1.1	U	0.15	1.1	0.78	U	0.11	0.78
2-Nitrophenol	0.40	U	0.066	0.40	0.55	U	0.091	0.55	0.38	U	0.063	0.38
3,3'-Dichlorobenzidine	0.81	U	0.088	0.81	1.1	U	0.12	1.1	0.78	U	0.085	0.78
3-Nitroaniline	0.81	U	0.090	0.81	1.1	U	0.12	1.1	0.78	U	0.087	0.78
4,6-Dinitro-2-methylphenol	1.2	U	0.19	1.2	1.7	U	0.26	1.7	1.2	U	0.18	1.2
4-Bromophenyl phenyl ether	0.40	U	0.071	0.40	0.55	U	0.098	0.55	0.38	U	0.069	0.38
4-Chloro-3-methylphenol	0.40	U	0.067	0.40	0.55	U	0.092	0.55	0.38	U	0.065	0.38
4-Chloroaniline	0.40	U	0.050	0.40	0.55	U	0.069	0.55	0.38	U	0.048	0.38
4-Chlorophenyl phenyl ether	0.40	U	0.069	0.40	0.55	U	0.095	0.55	0.38	U	0.066	0.38

TestAmerica

SUMMARY OF ANALYTICAL RESULTS: 460-6957-1

Sample ID	NVF-SB-06-A				NVF-SB-10-A				NVF-SB-24-A			
Lab Sample No.	460-6957-8				460-6957-10				460-6957-12			
Sampling Date	10/13/2009 2:25:00 AM				10/13/2009 10:34:00 AM				10/13/2009 11:30:00 AM			
Matrix	Solid				Solid				Solid			
Dilution Factor	1				1				1			
Units	mg/kg				mg/kg				mg/kg			
SEMIVOLATILE COMPOUNDS (GC/MS)			MDL	PQL			MDL	PQL			MDL	PQL
4-Methylphenol	0.40	U	0.066	0.40	0.55	U	0.090	0.55	0.38	U	0.063	0.38
4-Nitroaniline	0.81	U	0.083	0.81	1.1	U	0.11	1.1	0.78	U	0.079	0.78
4-Nitrophenol	1.2	U	0.10	1.2	1.7	U	0.14	1.7	1.2	U	0.099	1.2
Acenaphthene	0.40	U	0.057	0.40	0.22	J	0.078	0.55	0.38	U	0.055	0.38
Acenaphthylene	0.40	U	0.057	0.40	0.55	U	0.079	0.55	0.38	U	0.055	0.38
Acetophenone	0.40	U	0.059	0.40	0.55	U	0.082	0.55	0.38	U	0.057	0.38
Anthracene	0.40	U	0.071	0.40	0.43	J	0.097	0.55	0.38	U	0.068	0.38
Atrazine	0.40	U	0.075	0.40	0.55	U	0.10	0.55	0.38	U	0.072	0.38
Benzaldehyde	0.40	U	0.025	0.40	0.55	U	0.034	0.55	0.38	U	0.024	0.38
Benzo[a]anthracene	0.040	U	0.0074	0.040	1.3		0.010	0.055	0.039		0.0071	0.038
Benzo[a]pyrene	0.040	U	0.0049	0.040	1.2		0.0068	0.055	0.041		0.0047	0.038
Benzo[b]fluoranthene	0.040	U	0.0059	0.040	1.5		0.0082	0.055	0.044		0.0057	0.038
Benzo[g,h,i]perylene	0.40	U	0.042	0.40	0.94		0.058	0.55	0.38	U	0.041	0.38
Benzo[k]fluoranthene	0.040	U	0.0056	0.040	0.56		0.0077	0.055	0.038	U	0.0054	0.038
Bis(2-chloroethoxy)methane	0.40	U	0.057	0.40	0.55	U	0.079	0.55	0.38	U	0.055	0.38
Bis(2-chloroethyl)ether	0.040	U	0.0083	0.040	0.055	U	0.011	0.055	0.038	U	0.008	0.038
Bis(2-ethylhexyl) phthalate	0.40	U	0.053	0.40	0.34	J	0.073	0.55	0.38	U	0.051	0.38
Butyl benzyl phthalate	0.40	U	0.047	0.40	0.55	U	0.064	0.55	0.38	U	0.045	0.38
Caprolactam	0.40	U	0.055	0.40	0.55	U	0.076	0.55	0.38	U	0.053	0.38
Carbazole	0.40	U	0.064	0.40	0.25	J	0.088	0.55	0.38	U	0.061	0.38
Chrysene	0.40	U	0.058	0.40	1.5		0.080	0.55	0.38	U	0.056	0.38
Dibenz(a,h)anthracene	0.040	U	0.0048	0.040	0.27		0.0066	0.055	0.038	U	0.0046	0.038

TestAmerica

SUMMARY OF ANALYTICAL RESULTS: 460-6957-1

Sample ID	NVF-SB-06-A				NVF-SB-10-A				NVF-SB-24-A			
Lab Sample No.	460-6957-8				460-6957-10				460-6957-12			
Sampling Date	10/13/2009 2:25:00 AM				10/13/2009 10:34:00 AM				10/13/2009 11:30:00 AM			
Matrix	Solid				Solid				Solid			
Dilution Factor	1				1				1			
Units	mg/kg				mg/kg				mg/kg			
SEMIVOLATILE COMPOUNDS (GC/MS)			MDL	PQL			MDL	PQL			MDL	PQL
Dibenzofuran	0.40	U	0.060	0.40	0.15	J	0.083	0.55	0.38	U	0.058	0.38
Diethyl phthalate	0.40	U	0.054	0.40	0.55	U	0.074	0.55	0.38	U	0.052	0.38
Dimethyl phthalate	0.40	U	0.054	0.40	0.55	U	0.074	0.55	0.38	U	0.052	0.38
Di-n-butyl phthalate	0.40	U	0.061	0.40	0.55	U	0.084	0.55	0.38	U	0.059	0.38
Di-n-octyl phthalate	0.40	U	0.048	0.40	0.55	U	0.065	0.55	0.38	U	0.046	0.38
Fluoranthene	0.40	U	0.066	0.40	2.5		0.092	0.55	0.38	U	0.064	0.38
Fluorene	0.40	U	0.068	0.40	0.17	J	0.093	0.55	0.38	U	0.065	0.38
Hexachlorobenzene	0.040	U	0.0055	0.040	0.055	U	0.0076	0.055	0.038	U	0.0053	0.038
Hexachlorobutadiene	0.081	U	0.016	0.081	0.11	U	0.022	0.11	0.078	U	0.016	0.078
Hexachlorocyclopentadiene	0.40	U	0.12	0.40	0.55	U	0.16	0.55	0.38	U	0.11	0.38
Hexachloroethane	0.040	U	0.0067	0.040	0.055	U	0.0093	0.055	0.038	U	0.0065	0.038
Indeno[1,2,3-cd]pyrene	0.040	U	0.0064	0.040	1.0		0.0088	0.055	0.029	J	0.0062	0.038
Isophorone	0.40	U	0.046	0.40	0.55	U	0.063	0.55	0.38	U	0.044	0.38
Naphthalene	0.40	U	0.059	0.40	0.21	J	0.081	0.55	0.38	U	0.056	0.38
Nitrobenzene	0.040	U	0.0089	0.040	0.055	U	0.012	0.055	0.038	U	0.0086	0.038
N-Nitrosodi-n-propylamine	0.040	U	0.0053	0.040	0.055	U	0.0073	0.055	0.038	U	0.0051	0.038
N-Nitrosodiphenylamine	0.40	U	0.065	0.40	0.55	U	0.090	0.55	0.38	U	0.063	0.38
Pentachlorophenol	1.2	U	0.20	1.2	1.7	U	0.27	1.7	1.2	U	0.19	1.2
Phenanthrene	0.40	U	0.070	0.40	1.6		0.096	0.55	0.38	U	0.067	0.38
Phenol	0.40	U	0.049	0.40	0.55	U	0.067	0.55	0.38	U	0.047	0.38
Pyrene	0.40	U	0.069	0.40	1.8		0.095	0.55	0.38	U	0.067	0.38
Total Confident Conc.	0				14.17				0.124			

SUMMARY OF ANALYTICAL RESULTS: 460-6957-1

Sample ID	NVF-SB-06-A				NVF-SB-10-A				NVF-SB-24-A			
Lab Sample No.	460-6957-8				460-6957-10				460-6957-12			
Sampling Date	10/13/2009 2:25:00 AM				10/13/2009 10:34:00 AM				10/13/2009 11:30:00 AM			
Matrix	Solid				Solid				Solid			
Dilution Factor	1				1				1			
Units	mg/kg				mg/kg				mg/kg			
SEMIVOLATILE COMPOUNDS (GC/MS)			MDL	PQL			MDL	PQL			MDL	PQL
Total Estimated Conc. (TICs)	0				9.35				0			

NR: Not analyzed.

U: Indicates the analyte was analyzed for but not detected.

Generated on 10/23/2009 11:53:45 AM

TestAmerica

SUMMARY OF ANALYTICAL RESULTS: 460-

Sample ID	NVF-SB-28-A			
Lab Sample No.	460-6957-14			
Sampling Date	10/13/2009 11:00:00 AM			
Matrix	Solid			
Dilution Factor	1			
Units	mg/kg			
SEMIVOLATILE COMPOUNDS (GC/MS)			MDL	PQL
1,1'-Biphenyl	0.43	U	0.071	0.43
2,2'-oxybis[1-chloropropane]	0.43	U	0.056	0.43
2,4,5-Trichlorophenol	0.43	U	0.083	0.43
2,4,6-Trichlorophenol	0.43	U	0.077	0.43
2,4-Dichlorophenol	0.43	U	0.069	0.43
2,4-Dimethylphenol	0.43	U	0.069	0.43
2,4-Dinitrophenol	1.3	U	0.091	1.3
2,4-Dinitrotoluene	0.087	U	0.013	0.087
2,6-Dinitrotoluene	0.087	U	0.011	0.087
2-Chloronaphthalene	0.43	U	0.061	0.43
2-Chlorophenol	0.43	U	0.057	0.43
2-Methylnaphthalene	0.43	U	0.063	0.43
2-Methylphenol	0.43	U	0.062	0.43
2-Nitroaniline	0.87	U	0.12	0.87
2-Nitrophenol	0.43	U	0.071	0.43
3,3'-Dichlorobenzidine	0.87	U	0.095	0.87
3-Nitroaniline	0.87	U	0.097	0.87
4,6-Dinitro-2-methylphenol	1.3	U	0.21	1.3
4-Bromophenyl phenyl ether	0.43	U	0.077	0.43
4-Chloro-3-methylphenol	0.43	U	0.072	0.43
4-Chloroaniline	0.43	U	0.054	0.43
4-Chlorophenyl phenyl ether	0.43	U	0.074	0.43

TestAmerica

SUMMARY OF ANALYTICAL RESULTS: 460-

Sample ID	NVF-SB-28-A			
Lab Sample No.	460-6957-14			
Sampling Date	10/13/2009 11:00:00 AM			
Matrix	Solid			
Dilution Factor	1			
Units	mg/kg			
SEMIVOLATILE COMPOUNDS (GC/MS)			MDL	PQL
4-Methylphenol	0.43	U	0.070	0.43
4-Nitroaniline	0.87	U	0.089	0.87
4-Nitrophenol	1.3	U	0.11	1.3
Acenaphthene	0.078	J	0.061	0.43
Acenaphthylene	0.43	U	0.062	0.43
Acetophenone	0.43	U	0.064	0.43
Anthracene	0.12	J	0.076	0.43
Atrazine	0.43	U	0.080	0.43
Benzaldehyde	0.43	U	0.027	0.43
Benzo[a]anthracene	0.27		0.008	0.043
Benzo[a]pyrene	0.25		0.0053	0.043
Benzo[b]fluoranthene	0.34		0.0064	0.043
Benzo[g,h,i]perylene	0.15	J	0.045	0.43
Benzo[k]fluoranthene	0.13		0.006	0.043
Bis(2-chloroethoxy)methane	0.43	U	0.061	0.43
Bis(2-chloroethyl)ether	0.043	U	0.009	0.043
Bis(2-ethylhexyl) phthalate	0.43	U	0.057	0.43
Butyl benzyl phthalate	0.43	U	0.050	0.43
Caprolactam	0.43	U	0.059	0.43
Carbazole	0.43	U	0.068	0.43
Chrysene	0.28	J	0.063	0.43
Dibenz(a,h)anthracene	0.036	J	0.0052	0.043

TestAmerica

SUMMARY OF ANALYTICAL RESULTS: 460-

Sample ID	NVF-SB-28-A			
Lab Sample No.	460-6957-14			
Sampling Date	10/13/2009 11:00:00 AM			
Matrix	Solid			
Dilution Factor	1			
Units	mg/kg			
SEMIVOLATILE COMPOUNDS (GC/MS)			MDL	PQL
Dibenzofuran	0.43	U	0.065	0.43
Diethyl phthalate	0.43	U	0.058	0.43
Dimethyl phthalate	0.43	U	0.058	0.43
Di-n-butyl phthalate	0.43	U	0.066	0.43
Di-n-octyl phthalate	0.43	U	0.051	0.43
Fluoranthene	0.62		0.072	0.43
Fluorene	0.43	U	0.073	0.43
Hexachlorobenzene	0.043	U	0.006	0.043
Hexachlorobutadiene	0.087	U	0.017	0.087
Hexachlorocyclopentadiene	0.43	U	0.13	0.43
Hexachloroethane	0.043	U	0.0073	0.043
Indeno[1,2,3-cd]pyrene	0.15		0.0069	0.043
Isophorone	0.43	U	0.049	0.43
Naphthalene	0.43	U	0.063	0.43
Nitrobenzene	0.043	U	0.0096	0.043
N-Nitrosodi-n-propylamine	0.043	U	0.0057	0.043
N-Nitrosodiphenylamine	0.43	U	0.070	0.43
Pentachlorophenol	1.3	U	0.21	1.3
Phenanthrene	0.45		0.075	0.43
Phenol	0.43	U	0.053	0.43
Pyrene	0.51		0.074	0.43
Total Confident Conc.	2.72			

SUMMARY OF ANALYTICAL RESULTS: 460-

Sample ID	NVF-SB-28-A			
Lab Sample No.	460-6957-14			
Sampling Date	10/13/2009 11:00:00 AM			
Matrix	Solid			
Dilution Factor	1			
Units	mg/kg			
SEMIVOLATILE COMPOUNDS (GC/MS)			MDL	PQL
Total Estimated Conc. (TICs)	0			

NR: Not analyzed.

U: Indicates the analyte was analyzed for but

Generated on 10/23/2009 11:53:45 AM

SUMMARY OF ANALYTICAL RESULTS: 460-6957-1

Sample ID	NVF-SB-06-A			
Lab Sample No.	460-6957-8			
Sampling Date	10/13/2009 2:25:00 AM			
Matrix	Solid			
Dilution Factor	1			
Units	mg/kg			
PESTICIDES/PCBs			MDL	PQL
4,4'-DDD	0.0039	J p	0.00097	0.0081
4,4'-DDE	0.0032	J	0.0016	0.0081
4,4'-DDT	0.0073	J p	0.001	0.0081
Aldrin	0.0081	U	0.0018	0.0081
alpha-BHC	0.0081	U	0.0015	0.0081
alpha-Chlordane	0.0081	U	0.0017	0.0081
beta-BHC	0.0081	U	0.0011	0.0081
delta-BHC	0.0081	U	0.0012	0.0081
Dieldrin	0.0081	U	0.0016	0.0081
Endosulfan I	0.0081	U	0.0017	0.0081
Endosulfan II	0.0081	U	0.0012	0.0081
Endosulfan sulfate	0.0013	J p	0.001	0.0081
Endrin	0.0081	U	0.0011	0.0081
Endrin aldehyde	0.0081	U	0.002	0.0081
Endrin ketone	0.0081	U	0.0012	0.0081
gamma-BHC (Lindane)	0.0081	U	0.00094	0.0081
gamma-Chlordane	0.0081	U	0.0017	0.0081
Heptachlor	0.0081	U	0.0012	0.0081
Heptachlor epoxide	0.0081	U	0.0016	0.0081
Methoxychlor	0.0081	U	0.00091	0.0081
Toxaphene	0.081	U	0.017	0.081

SUMMARY OF ANALYTICAL RESULTS: 460-6957-1

Sample ID	NVF-SB-06-A			
Lab Sample No.	460-6957-8			
Sampling Date	10/13/2009 2:25:00 AM			
Matrix	Solid			
Dilution Factor	1			
Units	mg/kg			
PESTICIDES/PCBs			MDL	PQL

NR: Not analyzed.

J: Result is less than the RL but greater than or equal to the MDL and the concentration is an approximate value.

p: The %RPD between the primary and confirmation column/detector is >40%. The lower value has been reported.

U: Indicates the analyte was analyzed for but not detected.

Generated on 10/23/2009 11:53:45 AM

SUMMARY OF ANALYTICAL RESULTS: 460-6957-1

Sample ID	NVF-SB-06-A			
Lab Sample No.	460-6957-8			
Sampling Date	10/13/2009 2:25:00 AM			
Matrix	Solid			
Dilution Factor	1			
Units	mg/kg			
PESTICIDES/PCBs			MDL	PQL
PCB-1016	0.081	U	0.015	0.081
PCB-1221	0.081	U	0.024	0.081
PCB-1232	0.081	U	0.046	0.081
PCB-1242	0.081	U	0.015	0.081
PCB-1248	0.081	U	0.022	0.081
PCB-1254	0.081	U	0.028	0.081
PCB-1260	0.081	U	0.009	0.081

NR: Not analyzed.

U: Indicates the analyte was analyzed for but not detected.

Generated on 10/23/2009 11:53:46 AM

TestAmerica

SUMMARY OF ANALYTICAL RESULTS: 460-6957-1

Sample ID	NVF-SB-10-A				NVF-SB-24-A				NVF-SB-28-A			
Lab Sample No.	460-6957-10				460-6957-12				460-6957-14			
Sampling Date	10/13/2009 10:34:00 AM				10/13/2009 11:30:00 AM				10/13/2009 11:00:00 AM			
Matrix	Solid				Solid				Solid			
Dilution Factor												
Units	mg/Kg				mg/Kg				mg/Kg			
METALS			MDL	PQL			MDL	PQL			MDL	PQL
Aluminum	13000		22.9	62.4	22900		16.0	43.5	28100		18.9	51.5
Antimony	11.6		1.4	3.1	2.2	U	0.96	2.2	2.6	U	1.1	2.6
Arsenic	14.6		1.1	1.6	5.1		0.76	1.1	4.6		0.90	1.3
Barium	436		1.9	62.4	195		1.3	43.5	246		1.6	51.5
Beryllium	1.0		0.27	0.62	1.2		0.19	0.44	1.3		0.23	0.52
Cadmium	6.3		0.24	1.6	0.84	J	0.17	1.1	1.3	U	0.20	1.3
Calcium	7680		41.0	1560	13600		28.6	1090	3070		33.9	1290
Chromium	48.1		1.9	3.1	61.7		1.3	2.2	47.8		1.5	2.6
Cobalt	12.0	J	1.9	15.6	12.1		1.3	10.9	14.5		1.6	12.9
Copper	1660		1.3	7.8	100		0.89	5.4	60.2		1.1	6.4
Iron	111000		82.8	234	30100		11.6	32.7	38900		13.7	38.6
Lead	2320		0.78	1.6	85.7		0.54	1.1	123		0.64	1.3
Magnesium	3840		16.5	1560	12400		11.5	1090	5960		13.6	1290
Manganese	591		1.8	4.7	414		1.2	3.3	575		1.5	3.9
Mercury	1.9		0.043	0.054	0.52		0.029	0.037	0.042	U	0.033	0.042
Nickel	41.3		0.84	12.5	35.8		0.58	8.7	27.7		0.69	10.3
Potassium	1600		70.4	1560	4720		49.1	1090	5150		58.1	1290
Selenium	4.8		1.5	3.1	1.4	J	1.0	2.2	2.0	J	1.2	2.6
Silver	31.0		0.24	3.1	0.46	J	0.17	2.2	0.50	J	0.20	2.6
Sodium	174	J	95.8	1560	84.7	J	66.8	1090	86.8	J	79.1	1290
Thallium	3.9	U	1.9	3.9	2.2	U	1.1	2.2	2.6	U	1.2	2.6
Vanadium	61.1		0.81	15.6	65.6		0.57	10.9	80.0		0.67	12.9

SUMMARY OF ANALYTICAL RESULTS: 460-6957-1

Sample ID	NVF-SB-10-A				NVF-SB-24-A				NVF-SB-28-A			
Lab Sample No.	460-6957-10				460-6957-12				460-6957-14			
Sampling Date	10/13/2009 10:34:00 AM				10/13/2009 11:30:00 AM				10/13/2009 11:00:00 AM			
Matrix	Solid				Solid				Solid			
Dilution Factor												
Units	mg/Kg				mg/Kg				mg/Kg			
METALS			MDL	PQL			MDL	PQL			MDL	PQL
Zinc	10700		1.5	9.4	872		1.1	6.5	466		1.3	7.7

NR: Not analyzed.

J: Result is less than the RL but greater than or equal to the MDL and the concentration is an approximate value.

U: Indicates the analyte was analyzed for but not detected.

Generated on 10/23/2009 11:53:46 AM

TestAmerica

SUMMARY OF ANALYTICA

Sample ID	NVF-SB-06-A				NVF-SB-07-A			
Lab Sample No.	460-6957-8				460-6957-9			
Sampling Date	10/13/2009 2:25:00 AM				10/13/2009 10:45:00 AM			
Matrix	Solid				Solid			
Dilution Factor								
Units	mg/Kg				mg/Kg			
METALS			MDL	PQL			MDL	PQL
Aluminum	32900		17.7	48.4	14100		21.9	59.7
Antimony	2.4	U	1.1	2.4	3.0	U	1.3	3.0
Arsenic	1.1	J	0.84	1.2	13.5		1.0	1.5
Barium	171		1.5	48.4	150		1.8	59.7
Beryllium	1.4		0.21	0.48	0.88		0.26	0.60
Cadmium	0.26	J	0.19	1.2	1.8		0.23	1.5
Calcium	724	J	31.8	1210	12600		39.3	1490
Chromium	45.3		1.4	2.4	867		1.8	3.0
Cobalt	9.6	J	1.5	12.1	17.2		1.8	14.9
Copper	42.9		0.99	6.0	304		1.2	7.5
Iron	28200		12.8	36.3	124000		79.2	224
Lead	14.2		0.60	1.2	499		0.75	1.5
Magnesium	5230		12.8	1210	8210		15.8	1490
Manganese	379		1.4	3.6	1100		1.7	4.5
Mercury	0.66		0.031	0.040	4.9		0.19	0.24
Nickel	14.9		0.65	9.7	126		0.80	11.9
Potassium	5200		54.6	1210	1610		67.4	1490
Selenium	2.4	U	1.1	2.4	4.7		1.4	3.0
Silver	0.50	J	0.18	2.4	1.3	J	0.23	3.0
Sodium	1210	U	74.3	1210	254	J	91.7	1490
Thallium	2.4	U	1.2	2.4	3.7	U	1.8	3.7
Vanadium	54.9		0.63	12.1	69.9		0.78	14.9

SUMMARY OF ANALYTICA

Sample ID	NVF-SB-06-A				NVF-SB-07-A			
Lab Sample No.	460-6957-8				460-6957-9			
Sampling Date	10/13/2009 2:25:00 AM				10/13/2009 10:45:00 AM			
Matrix	Solid				Solid			
Dilution Factor								
Units	mg/Kg				mg/Kg			
METALS			MDL	PQL			MDL	PQL
Zinc	611		1.2	7.3	1380		1.5	9.0

NR: Not analyzed.

J: Result is less than the R

U: Indicates the analyte wa

Generated on 10/23/2009 11

SUMMARY OF ANALYTICAL RESULTS: 460-6957-1

Sample ID	NVF-SB-01-A				NVF-SB-10-A				NVF-SB-21-A			
Lab Sample No.	460-6957-1				460-6957-10				460-6957-11			
Sampling Date	10/13/2009 12:15:00 PM				10/13/2009 10:34:00 AM				10/13/2009 1:45:00 AM			
Matrix	Solid				Solid				Solid			
Dilution Factor												
Units												
WET CHEMISTRY			MDL	PQL			MDL	PQL			MDL	PQL
Percent Moisture (%)	17.8		1.0	1.0	40.1		1.0	1.0	17.3		1.0	1.0
Percent Solids (%)	82.2		1.0	1.0	59.9		1.0	1.0	82.7		1.0	1.0
Cyanide, Total (mg/Kg)	NR				NR				NR			

NR: Not analyzed.

U: Indicates the analyte was analyzed for but not detected.

Generated on 10/23/2009 11:53:47 AM

TestAmerica

SUMMARY OF ANALYTICAL RESULTS: 460-

Sample ID	NVF-SB-24-A				NVF-SB-25-A				NVF-SB-28-A			
Lab Sample No.	460-6957-12				460-6957-13				460-6957-14			
Sampling Date	10/13/2009 11:30:00 AM				10/13/2009 11:10:00 AM				10/13/2009 11:00:00 AM			
Matrix	Solid				Solid				Solid			
Dilution Factor												
Units												
WET CHEMISTRY			MDL	PQL			MDL	PQL			MDL	PQL
Percent Moisture (%)	14.1		1.0	1.0	18.4		1.0	1.0	23.1		1.0	1.0
Percent Solids (%)	85.9		1.0	1.0	81.6		1.0	1.0	76.9		1.0	1.0
Cyanide, Total (mg/Kg)	NR				NR				NR			

NR: Not analyzed.

U: Indicates the analyte was analyzed for but

Generated on 10/23/2009 11:53:47 AM

TestAmerica

SUMMARY OF ANALYTICAL RESULTS: 460-

Sample ID	NVF-SB-01-AA				NVF-SB-02-A				NVF-SB-902-A			
Lab Sample No.	460-6957-2				460-6957-3				460-6957-4			
Sampling Date	10/13/2009 1:25:00 AM				10/13/2009 1:10:00 AM				10/13/2009 1:15:00 AM			
Matrix	Solid				Solid				Solid			
Dilution Factor												
Units												
WET CHEMISTRY			MDL	PQL			MDL	PQL			MDL	PQL
Percent Moisture (%)	21.2		1.0	1.0	16.8		1.0	1.0	19.7		1.0	1.0
Percent Solids (%)	78.8		1.0	1.0	83.2		1.0	1.0	80.3		1.0	1.0
Cyanide, Total (mg/Kg)	NR				NR				NR			

NR: Not analyzed.

U: Indicates the analyte was analyzed for but

Generated on 10/23/2009 11:53:47 AM

TestAmerica

SUMMARY OF ANALYTICAL RESULTS: 460-

Sample ID	NVF-SB-03-A				NVF-SB-04-A				NVF-SB-05-A			
Lab Sample No.	460-6957-5				460-6957-6				460-6957-7			
Sampling Date	10/13/2009 1:47:00 AM				10/13/2009 1:35:00 AM				10/13/2009 1:55:00 AM			
Matrix	Solid				Solid				Solid			
Dilution Factor												
Units												
WET CHEMISTRY			MDL	PQL			MDL	PQL			MDL	PQL
Percent Moisture (%)	19.5		1.0	1.0	14.7		1.0	1.0	14.8		1.0	1.0
Percent Solids (%)	80.5		1.0	1.0	85.3		1.0	1.0	85.2		1.0	1.0
Cyanide, Total (mg/Kg)	NR				NR				NR			

NR: Not analyzed.

U: Indicates the analyte was analyzed for but

Generated on 10/23/2009 11:53:47 AM

SUMMARY OF ANALYTICAL RESULTS: 460-

Sample ID	NVF-SB-06-A				NVF-SB-07-A			
Lab Sample No.	460-6957-8				460-6957-9			
Sampling Date	10/13/2009 2:25:00 AM				10/13/2009 10:45:00 AM			
Matrix	Solid				Solid			
Dilution Factor								
Units								
WET CHEMISTRY			MDL	PQL			MDL	PQL
Percent Moisture (%)	17.3		1.0	1.0	33.7		1.0	1.0
Percent Solids (%)	82.7		1.0	1.0	66.3		1.0	1.0
Cyanide, Total (mg/Kg)	0.60	U	0.13	0.60	NR			

NR: Not analyzed.

U: Indicates the analyte was analyzed for but

Generated on 10/23/2009 11:53:47 AM

TestAmerica

SUMMARY OF ANALYTICAL RESULTS: 460-6960-1

Sample ID	NVF-SD-05				NVF-SD-07			
Lab Sample No.	460-6960-3				460-6960-5			
Sampling Date	10/12/2009 11:53:00 AM				10/12/2009 2:25:00 PM			
Matrix	Solid				Solid			
Dilution Factor	1				1			
Units	mg/kg				mg/kg			
SEMIVOLATILE COMPOUNDS (GC/MS)			MDL	PQL			MDL	PQL
1,1'-Biphenyl	0.74	U	0.12	0.74	0.48	U	0.080	0.48
2,2'-oxybis[1-chloropropane]	0.74	U	0.097	0.74	0.48	U	0.064	0.48
2,4,5-Trichlorophenol	0.74	U	0.14	0.74	0.48	U	0.093	0.48
2,4,6-Trichlorophenol	0.74	U	0.13	0.74	0.48	U	0.087	0.48
2,4-Dichlorophenol	0.74	U	0.12	0.74	0.48	U	0.078	0.48
2,4-Dimethylphenol	0.74	U	0.12	0.74	0.48	U	0.078	0.48
2,4-Dinitrophenol	2.2	U	0.16	2.2	1.5	U	0.10	1.5
2,4-Dinitrotoluene	0.15	U	0.022	0.15	0.098	U	0.014	0.098
2,6-Dinitrotoluene	0.15	U	0.019	0.15	0.098	U	0.012	0.098
2-Chloronaphthalene	0.74	U	0.10	0.74	0.48	U	0.068	0.48
2-Chlorophenol	0.74	U	0.099	0.74	0.48	U	0.065	0.48
2-Methylnaphthalene	0.74	U	0.11	0.74	0.48	U	0.071	0.48
2-Methylphenol	0.74	U	0.11	0.74	0.48	U	0.070	0.48
2-Nitroaniline	1.5	U	0.20	1.5	0.98	U	0.13	0.98
2-Nitrophenol	0.74	U	0.12	0.74	0.48	U	0.080	0.48
3,3'-Dichlorobenzidine	1.5	U	0.16	1.5	0.98	U	0.11	0.98
3-Nitroaniline	1.5	U	0.17	1.5	0.98	U	0.11	0.98
4,6-Dinitro-2-methylphenol	2.2	U	0.35	2.2	1.5	U	0.23	1.5
4-Bromophenyl phenyl ether	0.74	U	0.13	0.74	0.48	U	0.086	0.48
4-Chloro-3-methylphenol	0.74	U	0.12	0.74	0.48	U	0.081	0.48
4-Chloroaniline	0.74	U	0.093	0.74	0.48	U	0.061	0.48
4-Chlorophenyl phenyl ether	0.74	U	0.13	0.74	0.48	U	0.083	0.48

TestAmerica

SUMMARY OF ANALYTICAL RESULTS: 460-6960-1

Sample ID	NVF-SD-05				NVF-SD-07			
Lab Sample No.	460-6960-3				460-6960-5			
Sampling Date	10/12/2009 11:53:00 AM				10/12/2009 2:25:00 PM			
Matrix	Solid				Solid			
Dilution Factor	1				1			
Units	mg/kg				mg/kg			
SEMIVOLATILE COMPOUNDS (GC/MS)			MDL	PQL			MDL	PQL
4-Methylphenol	0.74	U	0.12	0.74	0.48	U	0.079	0.48
4-Nitroaniline	1.5	U	0.15	1.5	0.98	U	0.10	0.98
4-Nitrophenol	2.2	U	0.19	2.2	1.5	U	0.12	1.5
Acenaphthene	0.74	U	0.11	0.74	0.48	U	0.069	0.48
Acenaphthylene	0.74	U	0.11	0.74	0.48	U	0.069	0.48
Acetophenone	0.74	U	0.11	0.74	0.48	U	0.072	0.48
Anthracene	0.74	U	0.13	0.74	0.48	U	0.086	0.48
Atrazine	0.74	U	0.14	0.74	0.48	U	0.090	0.48
Benzaldehyde	0.11	J	0.046	0.74	0.48	U	0.030	0.48
Benzo[a]anthracene	0.074	U	0.014	0.074	0.030	J	0.009	0.048
Benzo[a]pyrene	0.092		0.0091	0.074	0.036	J *	0.006	0.048
Benzo[b]fluoranthene	0.14		0.011	0.074	0.053	*	0.0072	0.048
Benzo[g,h,i]perylene	0.10	J	0.078	0.74	0.48	U *	0.051	0.48
Benzo[k]fluoranthene	0.074	U	0.010	0.074	0.018	J	0.0068	0.048
Bis(2-chloroethoxy)methane	0.74	U	0.11	0.74	0.48	U	0.069	0.48
Bis(2-chloroethyl)ether	0.074	U	0.015	0.074	0.048	U	0.010	0.048
Bis(2-ethylhexyl) phthalate	0.74	U	0.098	0.74	0.48	U	0.064	0.48
Butyl benzyl phthalate	0.74	U	0.086	0.74	0.48	U	0.057	0.48
Caprolactam	0.74	U	0.10	0.74	0.48	U	0.067	0.48
Carbazole	0.74	U	0.12	0.74	0.48	U	0.077	0.48
Chrysene	0.13	J	0.11	0.74	0.48	U	0.070	0.48
Dibenz(a,h)anthracene	0.074	U	0.0089	0.074	0.048	U	0.0058	0.048

TestAmerica

SUMMARY OF ANALYTICAL RESULTS: 460-6960-1

Sample ID	NVF-SD-05				NVF-SD-07			
Lab Sample No.	460-6960-3				460-6960-5			
Sampling Date	10/12/2009 11:53:00 AM				10/12/2009 2:25:00 PM			
Matrix	Solid				Solid			
Dilution Factor	1				1			
Units	mg/kg				mg/kg			
SEMIVOLATILE COMPOUNDS (GC/MS)			MDL	PQL			MDL	PQL
Dibenzofuran	0.74	U	0.11	0.74	0.48	U	0.073	0.48
Diethyl phthalate	0.74	U	0.099	0.74	0.48	U	0.065	0.48
Dimethyl phthalate	0.74	U	0.10	0.74	0.48	U	0.065	0.48
Di-n-butyl phthalate	0.74	U	0.11	0.74	0.48	U	0.074	0.48
Di-n-octyl phthalate	0.74	U	0.088	0.74	0.48	U	0.058	0.48
Fluoranthene	0.26	J	0.12	0.74	0.48	U	0.081	0.48
Fluorene	0.74	U	0.13	0.74	0.48	U	0.082	0.48
Hexachlorobenzene	0.074	U	0.010	0.074	0.048	U	0.0067	0.048
Hexachlorobutadiene	0.15	U	0.030	0.15	0.098	U	0.020	0.098
Hexachlorocyclopentadiene	0.74	U	0.22	0.74	0.48	U	0.14	0.48
Hexachloroethane	0.074	U	0.012	0.074	0.048	U	0.0082	0.048
Indeno[1,2,3-cd]pyrene	0.086		0.012	0.074	0.018	J	0.0078	0.048
Isophorone	0.74	U	0.085	0.74	0.48	U	0.056	0.48
Naphthalene	0.74	U	0.11	0.74	0.48	U	0.071	0.48
Nitrobenzene	0.074	U	0.017	0.074	0.048	U	0.011	0.048
N-Nitrosodi-n-propylamine	0.074	U	0.0098	0.074	0.048	U	0.0064	0.048
N-Nitrosodiphenylamine	0.74	U	0.12	0.74	0.48	U	0.079	0.48
Pentachlorophenol	2.2	U	0.36	2.2	1.5	U	0.24	1.5
Phenanthrene	0.18	J	0.13	0.74	0.48	U	0.085	0.48
Phenol	0.74	U	0.091	0.74	0.48	U	0.059	0.48
Pyrene	0.17	J	0.13	0.74	0.48	U	0.084	0.48
Total Confident Conc.	0.318				0.053			

SUMMARY OF ANALYTICAL RESULTS: 460-6960-1

Sample ID	NVF-SD-05				NVF-SD-07			
Lab Sample No.	460-6960-3				460-6960-5			
Sampling Date	10/12/2009 11:53:00 AM				10/12/2009 2:25:00 PM			
Matrix	Solid				Solid			
Dilution Factor	1				1			
Units	mg/kg				mg/kg			
SEMIVOLATILE COMPOUNDS (GC/MS)			MDL	PQL			MDL	PQL
Total Estimated Conc. (TICs)	8.92				0			

NR: Not analyzed.

*: Recovery or RPD exceeds control limits

U: Indicates the analyte was analyzed for but not detected.

Generated on 10/23/2009 11:54:41 AM

TestAmerica

SUMMARY OF ANALYTICAL RESULTS: 460-6960-1

Sample ID	NVF-SD-05				NVF-SD-07			
Lab Sample No.	460-6960-3				460-6960-5			
Sampling Date	10/12/2009 11:53:00 AM				10/12/2009 2:25:00 PM			
Matrix	Solid				Solid			
Dilution Factor								
Units	mg/Kg				mg/Kg			
METALS			MDL	PQL			MDL	PQL
Aluminum	24800		32.2	88.0	12700		21.5	58.6
Antimony	4.4	U	1.9	4.4	2.9	U	1.3	2.9
Arsenic	4.0		1.5	2.2	2.9		1.0	1.5
Barium	236		2.7	88.0	119		1.8	58.6
Beryllium	1.3		0.39	0.88	0.72		0.26	0.59
Cadmium	2.2	U	0.34	2.2	1.5	U	0.23	1.5
Calcium	4820		57.8	2200	1870		38.5	1470
Chromium	49.5		2.6	4.4	24.9		1.7	2.9
Cobalt	13.8	J	2.7	22.0	8.6	J	1.8	14.7
Copper	43.7		1.8	11.0	41.7		1.2	7.3
Iron	32200		23.3	66.0	19800		15.6	44.0
Lead	34.4		1.1	2.2	27.1		0.73	1.5
Magnesium	6990		23.3	2200	3810		15.5	1470
Manganese	848		2.5	6.6	442		1.7	4.4
Mercury	0.13		0.056	0.070	0.083		0.037	0.047
Nickel	35.0		1.2	17.6	19.2		0.79	11.7
Potassium	3430		99.3	2200	2180		66.1	1470
Selenium	4.4	U	2.1	4.4	2.9	U	1.4	2.9
Silver	0.43	J	0.33	4.4	2.9	U	0.22	2.9
Sodium	2200	U	135	2200	1470	U	90.0	1470
Thallium	4.4	U	2.1	4.4	2.9	U	1.4	2.9
Vanadium	61.9		1.1	22.0	45.2		0.76	14.7

SUMMARY OF ANALYTICAL RESULTS: 460-6960-1

Sample ID	NVF-SD-05				NVF-SD-07			
Lab Sample No.	460-6960-3				460-6960-5			
Sampling Date	10/12/2009 11:53:00 AM				10/12/2009 2:25:00 PM			
Matrix	Solid				Solid			
Dilution Factor								
Units	mg/Kg				mg/Kg			
METALS			MDL	PQL			MDL	PQL
Zinc	300		2.2	13.2	1640		1.4	8.8

NR: Not analyzed.

J: Result is less than the RL but greater than or equal to the MDL and the concentration is an approximate value.

U: Indicates the analyte was analyzed for but not detected.

Generated on 10/23/2009 11:54:42 AM

SUMMARY OF ANALYTICAL RESULTS: 460-6960-1

Sample ID	NVF-SB-03				NVF-SB-13-B				NVF-SB-13-C			
Lab Sample No.	460-6960-1				460-6960-10				460-6960-11			
Sampling Date	10/12/2009 1:00:00 PM				10/12/2009 10:00:00 AM				10/12/2009 10:10:00 AM			
Matrix	Solid				Solid				Solid			
Dilution Factor												
Units												
WET CHEMISTRY			MDL	PQL			MDL	PQL			MDL	PQL
Percent Moisture (%)	46.1		1.0	1.0	17.7		1.0	1.0	18.6		1.0	1.0
Percent Solids (%)	53.9		1.0	1.0	82.3		1.0	1.0	81.4		1.0	1.0

NR: Not analyzed.

Generated on 10/23/2009 11:54:42 AM

SUMMARY OF ANALYTICAL RESULTS: 460-

Sample ID	NVF-SB-922-A				NVF-SB-04				NVF-SD-05			
Lab Sample No.	460-6960-12				460-6960-2				460-6960-3			
Sampling Date	10/12/2009 4:00:00 PM				10/12/2009 1:15:00 PM				10/12/2009 11:53:00 AM			
Matrix	Solid				Solid				Solid			
Dilution Factor												
Units												
WET CHEMISTRY			MDL	PQL			MDL	PQL			MDL	PQL
Percent Moisture (%)	18.1		1.0	1.0	16.6		1.0	1.0	55.4		1.0	1.0
Percent Solids (%)	81.9		1.0	1.0	83.4		1.0	1.0	44.6		1.0	1.0

NR: Not analyzed.

Generated on 10/23/2009 11:54:42 AM

TestAmerica

SUMMARY OF ANALYTICAL RESULTS: 460-

Sample ID	NVF-SB-06				NVF-SD-07				NVF-SB-08			
Lab Sample No.	460-6960-4				460-6960-5				460-6960-6			
Sampling Date	10/12/2009 11:17:00 AM				10/12/2009 2:25:00 PM				10/12/2009 2:10:00 PM			
Matrix	Solid				Solid				Solid			
Dilution Factor												
Units												
WET CHEMISTRY			MDL	PQL			MDL	PQL			MDL	PQL
Percent Moisture (%)	26.1		1.0	1.0	31.7		1.0	1.0	24.3		1.0	1.0
Percent Solids (%)	73.9		1.0	1.0	68.3		1.0	1.0	75.7		1.0	1.0

NR: Not analyzed.

Generated on 10/23/2009 11:54:42 AM

TestAmerica

SUMMARY OF ANALYTICAL RESULTS: 460-

Sample ID	NVF-SB-09				NVF-SB-909				NVF-SB-13-A			
Lab Sample No.	460-6960-7				460-6960-8				460-6960-9			
Sampling Date	10/12/2009 1:40:00 PM				10/12/2009 1:43:00 PM				10/12/2009 9:55:00 AM			
Matrix	Solid				Solid				Solid			
Dilution Factor												
Units												
WET CHEMISTRY			MDL	PQL			MDL	PQL			MDL	PQL
Percent Moisture (%)	28.2		1.0	1.0	28.6		1.0	1.0	23.9		1.0	1.0
Percent Solids (%)	71.8		1.0	1.0	71.4		1.0	1.0	76.1		1.0	1.0

NR: Not analyzed.

Generated on 10/23/2009 11:54:42 AM

2012-2013 PAH Lab Data

STATE OF DELAWARE
DEPARTMENT OF NATURAL RESOURCES AND
ENVIRONMENTAL CONTROL
DIVISION OF WATER
89 KINGS HIGHWAY
DOVER, DELAWARE 19901

ENVIRONMENTAL
LABORATORY SECTION

PHONE: (302) 739-9942
FAX: (302) 739-3491

September 20, 2012

DAWM - Site Investigation & Remediation Branch
391 Lukens Drive
New Castle, DE 19720

Attention: Robert M. Schulte

Enclosed you will find the following Laboratory Results for the following samples received at our laboratory:

Project Name *Nvf (Yorklyn)*

Client Sample Description	ELS Sample Number	Date Sampled	Date Received	Test
NVF-SBPAH01-A	1208037-003	8/22/2012	8/27/2012	SVOC - PAH by GC/MS
NVF-SBPAH03-A	1208037-005	8/22/2012	8/27/2012	SVOC - PAH by GC/MS
NVF-SBPAH14-A	1208037-001	8/21/2012	8/27/2012	SVOC - PAH by GC/MS
NVF-SBPAH17-A	1208037-002	8/21/2012	8/27/2012	SVOC - PAH by GC/MS
NVF-SBPAH901-A	1208037-004	8/22/2012	8/27/2012	SVOC - PAH by GC/MS

An Invoice for our services is also enclosed. If you have any questions regarding this data, please contact me at the above telephone number.

Sincerely,

Kathy A. Knowles
Laboratory Manager

PROJECT NARRATIVE
Project: Nvf (Yorklyn)
Order Number: 1208037

1 Discussion of Exceptions / Quality Control Abnormalities

1.1 A practical quantitation limit (PQL) standard was analyzed for the compounds Benzo(a)pryene and Dibenz(a,h)anthracene at 3 ng/µl. This PQL can be found with the standards data. Non-detected results for these two compounds are reported to the method detection limit (MDL) instead of the limit of quantitation (LOQ).

2 Summary of Dilutions

2.1	NVF-SBPAH01-A	1208037-003	x2
	NVF-SBPAH901-A	1208037-004	x5

3 Method References

3.1 The laboratory followed analytical protocol from USEPA SW-846 Method 8270D and the State of Delaware HSCA SOP.

4 Method Deviations

4.1 None

SEMIVOLATILES

DATA

SEMIVOLATILE ORGANICS ANALYSIS DATA SHEET

EPA SAMPLE NO.

NVF-SBPAH14-A

Lab Name: DNREC Environmental Laboratory Section
Lab QC Batch ID: SVOA-1208037
Matrix: Soil
Lab Sample ID: 1208037-001
Method: EPA 8270D Modified
Date/Time Received: 08/27/2012 15:00
Concentration Units (UG/L or UG/KG dry weight) : UG/KG
Percent Moisture: 17.0

CAS No.	Compound	Dilution Factor	Concentration	Qualifier	Analysis Time
91-20-3	Naphthalene	1	400	U	08/29/2012 19:56
208-96-8	Acenaphthylene	1	400	U	08/29/2012 19:56
83-32-9	Acenaphthene	1	400	U	08/29/2012 19:56
86-73-7	Fluorene	1	400	U	08/29/2012 19:56
85-01-8	Phenanthrene	1	59	J	08/29/2012 19:56
120-12-7	Anthracene	1	59	J	08/29/2012 19:56
206-44-0	Fluoranthene	1	94	J	08/29/2012 19:56
129-00-0	Pyrene	1	96	J	08/29/2012 19:56
56-55-3	Benzo(a)anthracene	1	47	J	08/29/2012 19:56
218-01-9	Chrysene	1	59	J	08/29/2012 19:56
205-99-2	Benzo(b)fluoranthene	1	52	J	08/29/2012 19:56
207-08-9	Benzo(k)fluoranthene	1	42	J	08/29/2012 19:56
50-32-8	Benzo(a)pyrene	1	44	J	08/29/2012 19:56
193-39-5	Indeno(1,2,3-cd)pyrene	1	400	U	08/29/2012 19:56
53-70-3	Dibenz(a,h)anthracene	1	80	U	08/29/2012 19:56
191-24-2	Benzo(g,h,i)perylene	1	400	U	08/29/2012 19:56

SEMIVOLATILE ORGANICS ANALYSIS DATA SHEET

EPA SAMPLE NO.

NVF-SBPAH17-A

Lab Name: DNREC Environmental Laboratory Section
Lab QC Batch ID: SVOA-1208037
Matrix: Soil
Lab Sample ID: 1208037-002
Method: EPA 8270D Modified
Date/Time Received: 08/27/2012 15:00
Concentration Units (UG/L or UG/KG dry weight) : UG/KG
Percent Moisture: 17.9

CAS No.	Compound	Dilution Factor	Concentration	Qualifier	Analysis Time
91-20-3	Naphthalene	1	410	U	08/29/2012 18:06
208-96-8	Acenaphthylene	1	410	U	08/29/2012 18:06
83-32-9	Acenaphthene	1	410	U	08/29/2012 18:06
86-73-7	Fluorene	1	410	U	08/29/2012 18:06
85-01-8	Phenanthrene	1	26	J	08/29/2012 18:06
120-12-7	Anthracene	1	26	J	08/29/2012 18:06
206-44-0	Fluoranthene	1	61	J	08/29/2012 18:06
129-00-0	Pyrene	1	52	J	08/29/2012 18:06
56-55-3	Benzo(a)anthracene	1	30	J	08/29/2012 18:06
218-01-9	Chrysene	1	41	J	08/29/2012 18:06
205-99-2	Benzo(b)fluoranthene	1	410	U	08/29/2012 18:06
207-08-9	Benzo(k)fluoranthene	1	30	J	08/29/2012 18:06
50-32-8	Benzo(a)pyrene	1	29	J	08/29/2012 18:06
193-39-5	Indeno(1,2,3-cd)pyrene	1	410	U	08/29/2012 18:06
53-70-3	Dibenz(a,h)anthracene	1	81	U	08/29/2012 18:06
191-24-2	Benzo(g,h,i)perylene	1	410	U	08/29/2012 18:06

SEMIVOLATILE ORGANICS ANALYSIS DATA SHEET

EPA SAMPLE NO.

NVF-SBPAH17-A MS

Lab Name: DNREC Environmental Laboratory Section
Lab QC Batch ID: SVOA-1208037
Matrix: Soil
Lab Sample ID: 1208037-002A
Method: EPA 8270D Modified
Date/Time Received: 08/27/2012 15:00
Concentration Units (UG/L or UG/KG dry weight) : UG/KG
Percent Moisture: 17.9

CAS No.	Compound	Dilution Factor	Concentration	Qualifier	Analysis Time
91-20-3	Naphthalene	1	270	J	08/29/2012 18:42
208-96-8	Acenaphthylene	1	410	U	08/29/2012 18:42
83-32-9	Acenaphthene	1	1300		08/29/2012 18:42
86-73-7	Fluorene	1	410	U	08/29/2012 18:42
85-01-8	Phenanthrene	1	82	J	08/29/2012 18:42
120-12-7	Anthracene	1	80	J	08/29/2012 18:42
206-44-0	Fluoranthene	1	130	J	08/29/2012 18:42
129-00-0	Pyrene	1	2000		08/29/2012 18:42
56-55-3	Benzo(a)anthracene	1	61	J	08/29/2012 18:42
218-01-9	Chrysene	1	71	J	08/29/2012 18:42
205-99-2	Benzo(b)fluoranthene	1	64	J	08/29/2012 18:42
207-08-9	Benzo(k)fluoranthene	1	53	J	08/29/2012 18:42
50-32-8	Benzo(a)pyrene	1	62	J	08/29/2012 18:42
193-39-5	Indeno(1,2,3-cd)pyrene	1	410	U	08/29/2012 18:42
53-70-3	Dibenz(a,h)anthracene	1	81	U	08/29/2012 18:42
191-24-2	Benzo(g,h,i)perylene	1	410	U	08/29/2012 18:42

SEMIVOLATILE ORGANICS ANALYSIS DATA SHEET

EPA SAMPLE NO.

NVF-SBPAH17-A MSD

Lab Name: DNREC Environmental Laboratory Section
Lab QC Batch ID: SVOA-1208037
Matrix: Soil
Lab Sample ID: 1208037-002B
Method: EPA 8270D Modified
Date/Time Received: 08/27/2012 15:00
Concentration Units (UG/L or UG/KG dry weight) : UG/KG
Percent Moisture: 17.9

CAS No.	Compound	Dilution Factor	Concentration	Qualifier	Analysis Time
91-20-3	Naphthalene	1	430		08/29/2012 19:19
208-96-8	Acenaphthylene	1	410	U	08/29/2012 19:19
83-32-9	Acenaphthene	1	1400		08/29/2012 19:19
86-73-7	Fluorene	1	410	U	08/29/2012 19:19
85-01-8	Phenanthrene	1	25	J	08/29/2012 19:19
120-12-7	Anthracene	1	25	J	08/29/2012 19:19
206-44-0	Fluoranthene	1	58	J	08/29/2012 19:19
129-00-0	Pyrene	1	1800		08/29/2012 19:19
56-55-3	Benzo(a)anthracene	1	28	J	08/29/2012 19:19
218-01-9	Chrysene	1	32	J	08/29/2012 19:19
205-99-2	Benzo(b)fluoranthene	1	410	U	08/29/2012 19:19
207-08-9	Benzo(k)fluoranthene	1	410	U	08/29/2012 19:19
50-32-8	Benzo(a)pyrene	1	120	U	08/29/2012 19:19
193-39-5	Indeno(1,2,3-cd)pyrene	1	410	U	08/29/2012 19:19
53-70-3	Dibenz(a,h)anthracene	1	81	U	08/29/2012 19:19
191-24-2	Benzo(g,h,i)perylene	1	410	U	08/29/2012 19:19

SEMIVOLATILE ORGANICS ANALYSIS DATA SHEET

EPA SAMPLE NO.

NVF-SBPAH01-A

Lab Name: DNREC Environmental Laboratory Section
Lab QC Batch ID: SVOA-1208037
Matrix: Soil
Lab Sample ID: 1208037-003
Method: EPA 8270D Modified
Date/Time Received: 08/27/2012 15:00
Concentration Units (UG/L or UG/KG dry weight) : UG/KG
Percent Moisture: 17.6

CAS No.	Compound	Dilution Factor	Concentration	Qualifier	Analysis Time
91-20-3	Naphthalene	1	480		08/29/2012 21:09
208-96-8	Acenaphthylene	1	21	J	08/29/2012 21:09
83-32-9	Acenaphthene	1	640		08/29/2012 21:09
86-73-7	Fluorene	1	590		08/29/2012 21:09
85-01-8	Phenanthrene	2	4100	D	08/29/2012 21:45
120-12-7	Anthracene	1	1100		08/29/2012 21:09
206-44-0	Fluoranthene	2	4600	D	08/29/2012 21:45
129-00-0	Pyrene	2	4300	D	08/29/2012 21:45
56-55-3	Benzo(a)anthracene	1	2400		08/29/2012 21:09
218-01-9	Chrysene	1	2100		08/29/2012 21:09
205-99-2	Benzo(b)fluoranthene	1	2000		08/29/2012 21:09
207-08-9	Benzo(k)fluoranthene	1	1200		08/29/2012 21:09
50-32-8	Benzo(a)pyrene	1	1600		08/29/2012 21:09
193-39-5	Indeno(1,2,3-cd)pyrene	1	910		08/29/2012 21:09
53-70-3	Dibenz(a,h)anthracene	1	400		08/29/2012 21:09
191-24-2	Benzo(g,h,i)perylene	1	920		08/29/2012 21:09

SEMIVOLATILE ORGANICS ANALYSIS DATA SHEET

EPA SAMPLE NO.

NVF-SBPAH901-A

Lab Name: DNREC Environmental Laboratory Section
Lab QC Batch ID: SVOA-1208037
Matrix: Soil
Lab Sample ID: 1208037-004
Method: EPA 8270D Modified
Date/Time Received: 08/27/2012 15:00
Concentration Units (UG/L or UG/KG dry weight) : UG/KG
Percent Moisture: 17.0

CAS No.	Compound	Dilution Factor	Concentration	Qualifier	Analysis Time
91-20-3	Naphthalene	1	1200		08/29/2012 22:22
208-96-8	Acenaphthylene	1	47	J	08/29/2012 22:22
83-32-9	Acenaphthene	1	1500		08/29/2012 22:22
86-73-7	Fluorene	1	1600		08/29/2012 22:22
85-01-8	Phenanthrene	5	8900	D	09/14/2012 13:15
120-12-7	Anthracene	1	3000		08/29/2012 22:22
206-44-0	Fluoranthene	5	8400	D	09/14/2012 13:15
129-00-0	Pyrene	5	6000	D	09/14/2012 13:15
56-55-3	Benzo(a)anthracene	5	3200	D	09/14/2012 13:15
218-01-9	Chrysene	1	3200		08/29/2012 22:22
205-99-2	Benzo(b)fluoranthene	1	2900		08/29/2012 22:22
207-08-9	Benzo(k)fluoranthene	1	2000		08/29/2012 22:22
50-32-8	Benzo(a)pyrene	1	2900		08/29/2012 22:22
193-39-5	Indeno(1,2,3-cd)pyrene	1	1600		08/29/2012 22:22
53-70-3	Dibenz(a,h)anthracene	1	650		08/29/2012 22:22
191-24-2	Benzo(g,h,i)perylene	1	1600		08/29/2012 22:22

SEMIVOLATILE ORGANICS ANALYSIS DATA SHEET

EPA SAMPLE NO.

NVF-SBPAH03-A

Lab Name: DNREC Environmental Laboratory Section
Lab QC Batch ID: SVOA-1208037
Matrix: Soil
Lab Sample ID: 1208037-005
Method: EPA 8270D Modified
Date/Time Received: 08/27/2012 15:00
Concentration Units (UG/L or UG/KG dry weight) : UG/KG
Percent Moisture: 30.7

CAS No.	Compound	Dilution Factor	Concentration	Qualifier	Analysis Time
91-20-3	Naphthalene	1	480	U	08/29/2012 20:32
208-96-8	Acenaphthylene	1	480	U	08/29/2012 20:32
83-32-9	Acenaphthene	1	54	J	08/29/2012 20:32
86-73-7	Fluorene	1	32	J	08/29/2012 20:32
85-01-8	Phenanthrene	1	350	J	08/29/2012 20:32
120-12-7	Anthracene	1	93	J	08/29/2012 20:32
206-44-0	Fluoranthene	1	700		08/29/2012 20:32
129-00-0	Pyrene	1	890		08/29/2012 20:32
56-55-3	Benzo(a)anthracene	1	450	J	08/29/2012 20:32
218-01-9	Chrysene	1	440	J	08/29/2012 20:32
205-99-2	Benzo(b)fluoranthene	1	450	J	08/29/2012 20:32
207-08-9	Benzo(k)fluoranthene	1	310	J	08/29/2012 20:32
50-32-8	Benzo(a)pyrene	1	400	J	08/29/2012 20:32
193-39-5	Indeno(1,2,3-cd)pyrene	1	230	J	08/29/2012 20:32
53-70-3	Dibenz(a,h)anthracene	1	96	U	08/29/2012 20:32
191-24-2	Benzo(g,h,i)perylene	1	250	J	08/29/2012 20:32

SEMIVOLATILE ORGANICS ANALYSIS DATA SHEET

EPA SAMPLE NO.

Method Blank

Lab Name: DNREC Environmental Laboratory Section
Lab QC Batch ID: SVOA-1208037
Matrix: Soil
Lab Sample ID: Method Blank
Method: EPA 8270D Modified
Date/Time Received:
Concentration Units (UG/L or UG/KG dry weight) : UG/KG
Percent Moisture: 0.0

CAS No.	Compound	Dilution Factor	Concentration	Qualifier	Analysis Time
91-20-3	Naphthalene	1	330	U	08/29/2012 15:38
208-96-8	Acenaphthylene	1	330	U	08/29/2012 15:38
83-32-9	Acenaphthene	1	330	U	08/29/2012 15:38
86-73-7	Fluorene	1	330	U	08/29/2012 15:38
85-01-8	Phenanthrene	1	330	U	08/29/2012 15:38
120-12-7	Anthracene	1	330	U	08/29/2012 15:38
206-44-0	Fluoranthene	1	330	U	08/29/2012 15:38
129-00-0	Pyrene	1	330	U	08/29/2012 15:38
56-55-3	Benzo(a)anthracene	1	330	U	08/29/2012 15:38
218-01-9	Chrysene	1	330	U	08/29/2012 15:38
205-99-2	Benzo(b)fluoranthene	1	330	U	08/29/2012 15:38
207-08-9	Benzo(k)fluoranthene	1	330	U	08/29/2012 15:38
50-32-8	Benzo(a)pyrene	1	100	U	08/29/2012 15:38
193-39-5	Indeno(1,2,3-cd)pyrene	1	330	U	08/29/2012 15:38
53-70-3	Dibenz(a,h)anthracene	1	67	U	08/29/2012 15:38
191-24-2	Benzo(g,h,i)perylene	1	330	U	08/29/2012 15:38

SEMIVOLATILE ORGANICS ANALYSIS DATA SHEET

EPA SAMPLE NO.

Method Blank 2

Lab Name: DNREC Environmental Laboratory Section
Lab QC Batch ID: SVOA-1208037
Matrix: Soil
Lab Sample ID: Method Blank 2
Method: EPA 8270D Modified
Date/Time Received:
Concentration Units (UG/L or UG/KG dry weight) : UG/KG
Percent Moisture: 0.0

CAS No.	Compound	Dilution Factor	Concentration	Qualifier	Analysis Time
91-20-3	Naphthalene	1	330	U	09/05/2012 15:28
208-96-8	Acenaphthylene	1	330	U	09/05/2012 15:28
83-32-9	Acenaphthene	1	330	U	09/05/2012 15:28
86-73-7	Fluorene	1	330	U	09/05/2012 15:28
85-01-8	Phenanthrene	1	330	U	09/05/2012 15:28
120-12-7	Anthracene	1	330	U	09/05/2012 15:28
206-44-0	Fluoranthene	1	330	U	09/05/2012 15:28
129-00-0	Pyrene	1	330	U	09/05/2012 15:28
56-55-3	Benzo(a)anthracene	1	330	U	09/05/2012 15:28
218-01-9	Chrysene	1	330	U	09/05/2012 15:28
205-99-2	Benzo(b)fluoranthene	1	330	U	09/05/2012 15:28
207-08-9	Benzo(k)fluoranthene	1	330	U	09/05/2012 15:28
50-32-8	Benzo(a)pyrene	1	100	U	09/05/2012 15:28
193-39-5	Indeno(1,2,3-cd)pyrene	1	330	U	09/05/2012 15:28
53-70-3	Dibenz(a,h)anthracene	1	67	U	09/05/2012 15:28
191-24-2	Benzo(g,h,i)perylene	1	330	U	09/05/2012 15:28

SEMIVOLATILE ORGANICS ANALYSIS DATA SHEET

EPA SAMPLE NO.

Method Blank 3

Lab Name: DNREC Environmental Laboratory Section
Lab QC Batch ID: SVOA-1208037
Matrix: Soil
Lab Sample ID: Method Blank 3
Method: EPA 8270D Modified
Date/Time Received:
Concentration Units (UG/L or UG/KG dry weight) : UG/KG
Percent Moisture: 0.0

CAS No.	Compound	Dilution Factor	Concentration	Qualifier	Analysis Time
91-20-3	Naphthalene	1	330	U	09/14/2012 12:39
208-96-8	Acenaphthylene	1	330	U	09/14/2012 12:39
83-32-9	Acenaphthene	1	330	U	09/14/2012 12:39
86-73-7	Fluorene	1	330	U	09/14/2012 12:39
85-01-8	Phenanthrene	1	330	U	09/14/2012 12:39
120-12-7	Anthracene	1	330	U	09/14/2012 12:39
206-44-0	Fluoranthene	1	330	U	09/14/2012 12:39
129-00-0	Pyrene	1	330	U	09/14/2012 12:39
56-55-3	Benzo(a)anthracene	1	330	U	09/14/2012 12:39
218-01-9	Chrysene	1	330	U	09/14/2012 12:39
205-99-2	Benzo(b)fluoranthene	1	330	U	09/14/2012 12:39
207-08-9	Benzo(k)fluoranthene	1	330	U	09/14/2012 12:39
50-32-8	Benzo(a)pyrene	1	100	U	09/14/2012 12:39
193-39-5	Indeno(1,2,3-cd)pyrene	1	330	U	09/14/2012 12:39
53-70-3	Dibenz(a,h)anthracene	1	67	U	09/14/2012 12:39
191-24-2	Benzo(g,h,i)perylene	1	330	U	09/14/2012 12:39

TestAmerica

THE LEADER IN ENVIRONMENTAL TESTING

SUMMARY OF ANALYTICAL RESULTS: 460-52376-1

Client ID		DE HSCA	DE HSCA	DE HSCA	DE HSCA	DE HSCA
Lab Sample ID		Surface Soil	Surface Soil	Surface Soil	Surface Soil	SubSurface Soil
Sampling Date		Critical	Critical	NonCritical	NonCritical	Critical
Matrix		Restricted	UnRestricted	Restricted	UnRestricted	Restricted
Dilution Factor						
Unit		mg/kg	mg/kg	mg/kg	mg/kg	mg/kg
SVOA-8270C-SOIL	CAS#					
SOIL BY 8270C						
2-Chloronaphthalene	91-58-7	620	620	5000	630	620
2-Methylnaphthalene	91-57-6	1	1	4100	160	1
Acenaphthene	83-32-9	270	270	5000	470	270
Acenaphthylene	208-96-8	NA	NA	NA	NA	NA
Anthracene	120-12-7	5000	1000	5000	1000	5000
Benzo[a]anthracene	56-55-3	8	0.9	8	0.9	8
Benzo[a]pyrene	50-32-8	0.8	0.09	0.8	0.09	0.8
Benzo[b]fluoranthene	205-99-2	8	0.9	8	0.9	8
Benzo[g,h,i]perylene	191-24-2	NA	NA	NA	NA	NA
Benzo[k]fluoranthene	207-08-9	78	9	78	9	78
Chrysene	218-01-9	780	87	780	87	780
Dibenz(a,h)anthracene	53-70-3	0.8	0.09	0.8	0.09	0.8
Fluoranthene	206-44-0	1800	310	5000	310	1800
Fluorene	86-73-7	300	300	5000	310	300
Indeno[1,2,3-cd]pyrene	193-39-5	8	0.9	8	0.9	8
Naphthalene	91-20-3	5	5	4100	160	5
Phenanthrene	85-01-8	5000	1000	5000	1000	5000
Pyrene	129-00-0	1700	230	5000	230	1700
Total Conc		NA	NA	NA	NA	NA

Highlighted Concentrations shown in bold type face exceed limits
J : Result is less than the RL but greater than or equal to the MDL and the concentration is an approximate value.
U : Indicates the analyte was analyzed for but not detected.

DE HSCA	DE HSCA	DE HSCA	NVF-SBPAH30-A			NVF-SBPAH32-A			NVF-SBPAH34-A	
SubSurface Soil	SubSurface Soil	SubSurface Soil	460-52376-1			460-52376-3			460-52376-5	
Critical	NonCritical	NonCritical	03/13/2013 11:10:00			03/13/2013 11:05:00			03/13/2013 11:00:00	
UnRestricted	Restricted	UnRestricted	Soil			Soil			Soil	
			1			1			5	
mg/kg	mg/kg	mg/kg	mg/kg			mg/kg			mg/kg	
			Result	Q	MDL	Result	Q	MDL	Result	Q
620	5000	630	0.044	U	0.044	0.048	U	0.048	0.25	U
1	4100	160	0.050	U	0.050	0.055	U	0.055	0.54	J
270	5000	470	0.057	U	0.057	0.069	J	0.063	3.3	
NA	NA	NA	0.046	U	0.046	0.051	U	0.051	0.26	U
1000	5000	1000	0.12	J	0.047	0.22	J	0.052	12	
0.9	8	0.9	0.31		0.0027	0.56		0.003	**18**	
0.09	0.8	0.09	**0.25**		0.0028	**0.45**		0.003	**14**	
0.9	8	0.9	0.31		0.0025	0.54		0.0027	**16**	
NA	NA	NA	0.17	J	0.029	0.26	J	0.032	7.0	
9	78	9	0.19		0.003	0.23		0.0033	6.8	
87	780	87	0.32	J	0.046	0.56		0.050	17	
0.09	0.8	0.09	0.071		0.0049	0.082		0.0054	**2.3**	
310	5000	310	0.59		0.052	1.1		0.057	34	
300	5000	310	0.050	U	0.050	0.069	J	0.055	5.1	
0.9	8	0.9	0.17		0.0073	0.26		0.008	**7.6**	
5	4100	160	0.045	U	0.045	0.050	U	0.050	0.36	J
1000	5000	1000	0.41		0.050	0.76		0.055	36	
230	5000	230	0.55		0.033	0.99		0.036	32	
NA	NA	NA	3.461			6.15			212	

	NVF-SBPAH35-A			NVF-SBPAH37-A			NVF-SBPAH38-A			NVF-SBFB01		
	460-52376-6			460-52376-9			460-52376-10			460-52376-20		
	03/13/2013 10:58:00			03/13/2013 10:50:00			03/13/2013 10:44:00			03/13/2013 10:46:00		
	Soil			Soil			Soil			Soil		
	1			1			1			1		
	mg/kg			mg/kg			mg/kg			mg/kg		
MDL	Result	Q	MDL	Result	Q	MDL	Result	Q	MDL	Result	Q	MDL
0.25	0.046	U	0.046	0.049	U	0.049	0.051	U	0.051	0.037	U	0.037
0.28	0.053	U	0.053	0.057	U	0.057	0.059	U	0.059	0.042	U	0.042
0.32	0.060	U	0.060	0.064	U	0.064	0.18	J	0.067	0.048	U	0.048
0.26	0.049	U	0.049	0.052	U	0.052	0.054	U	0.054	0.039	U	0.039
0.27	0.15	J	0.050	0.054	U	0.054	0.60		0.056	0.040	U	0.040
0.015	0.52		0.0029	0.075		0.0031	**1.5**		0.0032	0.0023	U	0.0023
0.016	**0.43**		0.0029	0.064		0.0031	**1.3**		0.0032	0.0023	U	0.0023
0.014	0.53		0.0026	0.081		0.0028	**1.6**		0.0029	0.0021	U	0.0021
0.16	0.27	J	0.030	0.036	J	0.033	0.84		0.034	0.024	U	0.024
0.017	0.26		0.0031	0.042	J	0.0034	0.67		0.0035	0.0025	U	0.0025
0.26	0.57		0.048	0.084	J	0.052	1.5		0.053	0.039	U	0.039
0.028	0.083		0.0052	0.0056	U	0.0056	**0.24**		0.0058	0.0042	U	0.0042
0.29	1.0		0.055	0.13	J	0.059	3.0		0.061	0.044	U	0.044
0.28	0.053	U	0.053	0.057	U	0.057	0.18	J	0.059	0.042	U	0.042
0.041	0.28		0.0076	0.037	J	0.0082	0.85		0.0085	0.0061	U	0.0061
0.26	0.048	U	0.048	0.051	U	0.051	0.053	U	0.053	0.038	U	0.038
0.28	0.64		0.052	0.067	J	0.056	2.2		0.058	0.042	U	0.042
0.18	0.85		0.034	0.12	J	0.037	2.5		0.038	0.028	U	0.028
	5.583			0.736			17.16			0		

NVF-SBPAH56-A			NVF-SBPAH59-A			NVF-SBPAH62-A			NVF-SBPAH962-A		
460-52376-33			460-52376-36			460-52376-39			460-52376-40		
03/13/2013 14:20:00			03/13/2013 14:30:00			03/13/2013 14:33:00			03/13/2013 14:35:00		
Soil			Soil			Soil			Soil		
1			1			1			1		
mg/kg			mg/kg			mg/kg			mg/kg		
Result	Q	MDL	Result	Q	MDL	Result	Q	MDL	Result	Q	MDL
0.047	U	0.047	0.058	U	0.058	0.045	U	0.045	0.046	U	0.046
0.054	U	0.054	0.067	U	0.067	0.052	U	0.052	0.053	U	0.053
0.061	U	0.061	0.17	J	0.076	0.059	U	0.059	0.060	U	0.060
0.049	U	0.049	0.061	U	0.061	0.048	U	0.048	0.049	U	0.049
0.051	U	0.051	0.40	J	0.063	0.11	J	0.049	0.054	J	0.050
0.13		0.0029	**1.4**		0.0036	0.33		0.0028	0.25		0.0029
0.15		0.003	**1.4**		0.0037	**0.37**		0.0028	**0.27**		0.0029
0.17		0.0026	**1.5**		0.0033	0.42		0.0025	0.32		0.0026
0.097	J	0.031	0.88		0.038	0.23	J	0.030	0.16	J	0.030
0.10		0.0032	0.70		0.0039	0.21		0.0031	0.14		0.0031
0.14	J	0.049	1.4		0.061	0.38	J	0.047	0.27	J	0.048
0.028	J	0.0053	**0.24**		0.0065	0.065		0.0051	0.047		0.0052
0.26	J	0.056	2.6		0.069	0.73		0.054	0.49		0.055
0.053	U	0.053	0.11	J	0.066	0.051	U	0.051	0.053	U	0.053
0.098		0.0078	**0.95**		0.0096	0.25		0.0075	0.16		0.0076
0.048	U	0.048	0.060	U	0.060	0.047	U	0.047	0.048	U	0.048
0.10	J	0.053	1.5		0.066	0.43		0.051	0.24	J	0.052
0.22	J	0.035	2.2		0.043	0.62		0.034	0.43		0.034
1.493			15.45			4.145			2.831		

NVF-SBPAH65-A		
460-52376-43		
03/13/2013 14:56:00		
Soil		
1		
mg/kg		
Result	Q	MDL
0.048	U	0.048
0.055	U	0.055
0.062	U	0.062
0.051	U	0.051
0.052	U	0.052
0.16		0.003
0.16		0.003
0.21		0.0027
0.11	J	0.032
0.088		0.0033
0.19	J	0.050
0.030	J	0.0054
0.30	J	0.057
0.055	U	0.055
0.11		0.008
0.050	U	0.050
0.15	J	0.055
0.27	J	0.036
1.778		

TestAmerica

THE LEADER IN ENVIRONMENTAL TESTING

SUMMARY OF ANALYTICAL RESULTS: 460-48736-1

Client ID		DE HSCA	DE HSCA	DE HSCA	DE HSCA	DE HSCA
Lab Sample ID		Surface Soil	Surface Soil	Surface Soil	Surface Soil	SubSurface Soil
Sampling Date		Critical	Critical	NonCritical	NonCritical	Critical
Matrix		Restricted	UnRestricted	Restricted	UnRestricted	Restricted
Dilution Factor						
Unit		mg/kg	mg/kg	mg/kg	mg/kg	mg/kg
SVOA-8270C-SOIL	CAS#					
SOIL BY 8270C						
2-Chloronaphthalene	91-58-7	620	620	5000	630	620
2-Methylnaphthalene	91-57-6	1	1	4100	160	1
Acenaphthene	83-32-9	270	270	5000	470	270
Acenaphthylene	208-96-8	NA	NA	NA	NA	NA
Anthracene	120-12-7	5000	1000	5000	1000	5000
Benzo[a]anthracene	56-55-3	8	0.9	8	0.9	8
Benzo[a]pyrene	50-32-8	0.8	0.09	0.8	0.09	0.8
Benzo[b]fluoranthene	205-99-2	8	0.9	8	0.9	8
Benzo[g,h,i]perylene	191-24-2	NA	NA	NA	NA	NA
Benzo[k]fluoranthene	207-08-9	78	9	78	9	78
Chrysene	218-01-9	780	87	780	87	780
Dibenz(a,h)anthracene	53-70-3	0.8	0.09	0.8	0.09	0.8
Fluoranthene	206-44-0	1800	310	5000	310	1800
Fluorene	86-73-7	300	300	5000	310	300
Indeno[1,2,3-cd]pyrene	193-39-5	8	0.9	8	0.9	8
Naphthalene	91-20-3	5	5	4100	160	5
Phenanthrene	85-01-8	5000	1000	5000	1000	5000
Pyrene	129-00-0	1700	230	5000	230	1700
Total Conc		NA	NA	NA	NA	NA

Highlighted Concentrations shown in bold type face exceed limits
J : Result is less than the RL but greater than or equal to the MDL and the concentration is an approximate value.
U : Indicates the analyte was analyzed for but not detected.

DE HSCA	DE HSCA	DE HSCA	NVR-20			NVR-22			NVR-26	
SubSurface Soil	SubSurface Soil	SubSurface Soil	460-48736-1			460-48736-3			460-48736-7	
Critical	NonCritical	NonCritical	12/13/2012 12:25:00			12/13/2012 12:37:00			12/13/2012 12:59:00	
UnRestricted	Restricted	UnRestricted	Soil			Soil			Soil	
			1			1			1	
mg/kg	mg/kg	mg/kg	mg/kg			mg/kg			mg/kg	
			Result	Q	MDL	Result	Q	MDL	Result	Q
620	5000	630	0.046	U	0.046	0.046	U	0.046	0.047	U
1	4100	160	0.18	J	0.053	0.060	J	0.053	0.054	U
270	5000	470	0.75		0.060	0.060	U	0.060	0.061	U
NA	NA	NA	0.049	U	0.049	0.049	U	0.049	0.050	U
1000	5000	1000	1.7		0.050	0.050	U	0.050	0.10	J
0.9	8	0.9	**3.7**		0.0029	0.12		0.0029	0.45	
0.09	0.8	0.09	**2.9**		0.0029	**0.12**		0.0029	**0.48**	
0.9	8	0.9	**3.7**		0.0026	0.17		0.0026	0.59	
NA	NA	NA	1.7		0.031	0.067	J	0.030	0.34	J
9	78	9	1.7		0.0031	0.086		0.0031	0.20	
87	780	87	3.7		0.048	0.15	J	0.048	0.51	
0.09	0.8	0.09	**0.57**		0.0052	0.0052	U	0.0052	0.079	
310	5000	310	6.3		0.055	0.23	J	0.055	0.73	
300	5000	310	0.99		0.053	0.053	U	0.053	0.054	U
0.9	8	0.9	**1.9**		0.0077	0.066		0.0076	0.36	
5	4100	160	0.13	J	0.048	0.048	U	0.048	0.049	U
1000	5000	1000	6.4		0.053	0.21	J	0.052	0.44	
230	5000	230	6.2		0.035	0.23	J	0.034	0.76	
NA	NA	NA	42.52			1.509			5.039	

	NVR-27		
	460-48736-8		
	12/13/2012 13:01:00		
	Soil		
	1		
	mg/kg		
MDL	Result	Q	MDL
0.047	0.046	U	0.046
0.054	0.053	U	0.053
0.061	0.060	U	0.060
0.050	0.048	U	0.048
0.051	0.050	U	0.050
0.0029	0.10		0.0029
0.003	**0.13**		0.0029
0.0027	0.20		0.0026
0.031	0.079	J	0.030
0.0032	0.079		0.0031
0.049	0.17	J	0.048
0.0053	0.0052	U	0.0052
0.056	0.26	J	0.054
0.054	0.052	U	0.052
0.0078	0.079		0.0076
0.049	0.047	U	0.047
0.054	0.078	J	0.052
0.035	0.27	J	0.034
	1.445		

Sample	Sample Name	Specific Method	CAS Number	Analyte	Result	Units	Qualifier	Limit	Reports To	Dilution
460-52376-1	NVF-SBPAH30-A	Moisture	N/A	Percent Moisture	15.6	%		1	MDL	1
460-52376-1	NVF-SBPAH30-A	Moisture	N/A	Percent Solids	84.4	%		1	MDL	1
460-52376-1	NVF-SBPAH30-A	8270DEL	208-96-8	Acenaphthylene	46	ug/Kg	U	46	MDL	1
460-52376-1	NVF-SBPAH30-A	8270DEL	120-12-7	Anthracene	120	ug/Kg	J	47	MDL	1
460-52376-1	NVF-SBPAH30-A	8270DEL	56-55-3	Benzo[a]anthracene	310	ug/Kg		2.7	MDL	1
460-52376-1	NVF-SBPAH30-A	8270DEL	205-99-2	Benzo[b]fluoranthene	310	ug/Kg		2.5	MDL	1
460-52376-1	NVF-SBPAH30-A	8270DEL	50-32-8	Benzo[a]pyrene	250	ug/Kg		2.8	MDL	1
460-52376-1	NVF-SBPAH30-A	8270DEL	191-24-2	Benzo[g,h,i]perylene	170	ug/Kg	J	29	MDL	1
460-52376-1	NVF-SBPAH30-A	8270DEL	207-08-9	Benzo[k]fluoranthene	190	ug/Kg		3	MDL	1
460-52376-1	NVF-SBPAH30-A	8270DEL	218-01-9	Chrysene	320	ug/Kg	J	46	MDL	1
460-52376-1	NVF-SBPAH30-A	8270DEL	53-70-3	Dibenz(a,h)anthracene	71	ug/Kg		4.9	MDL	1
460-52376-1	NVF-SBPAH30-A	8270DEL	206-44-0	Fluoranthene	590	ug/Kg		52	MDL	1
460-52376-1	NVF-SBPAH30-A	8270DEL	91-20-3	Naphthalene	45	ug/Kg	U	45	MDL	1
460-52376-1	NVF-SBPAH30-A	8270DEL	85-01-8	Phenanthrene	410	ug/Kg		50	MDL	1
460-52376-1	NVF-SBPAH30-A	8270DEL	129-00-0	Pyrene	550	ug/Kg		33	MDL	1
460-52376-1	NVF-SBPAH30-A	8270DEL	86-73-7	Fluorene	50	ug/Kg	U	50	MDL	1
460-52376-1	NVF-SBPAH30-A	8270DEL	83-32-9	Acenaphthene	57	ug/Kg	U	57	MDL	1
460-52376-1	NVF-SBPAH30-A	8270DEL	193-39-5	Indeno[1,2,3-cd]pyrene	170	ug/Kg		7.3	MDL	1
460-52376-1	NVF-SBPAH30-A	8270DEL	91-58-7	2-Chloronaphthalene	44	ug/Kg	U	44	MDL	1
460-52376-1	NVF-SBPAH30-A	8270DEL	91-57-6	2-Methylnaphthalene	50	ug/Kg	U	50	MDL	1
460-52376-10	NVF-SBPAH38-A	8270DEL	91-57-6	2-Methylnaphthalene	59	ug/Kg	U	59	MDL	1
460-52376-10	NVF-SBPAH38-A	8270DEL	91-58-7	2-Chloronaphthalene	51	ug/Kg	U	51	MDL	1
460-52376-10	NVF-SBPAH38-A	8270DEL	193-39-5	Indeno[1,2,3-cd]pyrene	850	ug/Kg		8.5	MDL	1
460-52376-10	NVF-SBPAH38-A	8270DEL	83-32-9	Acenaphthene	180	ug/Kg	J	67	MDL	1
460-52376-10	NVF-SBPAH38-A	8270DEL	86-73-7	Fluorene	180	ug/Kg	J	59	MDL	1
460-52376-10	NVF-SBPAH38-A	8270DEL	129-00-0	Pyrene	2500	ug/Kg		38	MDL	1
460-52376-10	NVF-SBPAH38-A	8270DEL	85-01-8	Phenanthrene	2200	ug/Kg		58	MDL	1
460-52376-10	NVF-SBPAH38-A	8270DEL	91-20-3	Naphthalene	53	ug/Kg	U	53	MDL	1
460-52376-10	NVF-SBPAH38-A	8270DEL	206-44-0	Fluoranthene	3000	ug/Kg		61	MDL	1
460-52376-10	NVF-SBPAH38-A	8270DEL	53-70-3	Dibenz(a,h)anthracene	240	ug/Kg		5.8	MDL	1
460-52376-10	NVF-SBPAH38-A	8270DEL	218-01-9	Chrysene	1500	ug/Kg		53	MDL	1
460-52376-10	NVF-SBPAH38-A	8270DEL	207-08-9	Benzo[k]fluoranthene	670	ug/Kg		3.5	MDL	1

460-52376-10	NVF-SBPAH38-A	8270DEL	191-24-2	Benzo[g,h,i]perylene	840	ug/Kg		34	MDL	1
460-52376-10	NVF-SBPAH38-A	8270DEL	50-32-8	Benzo[a]pyrene	1300	ug/Kg		3.2	MDL	1
460-52376-10	NVF-SBPAH38-A	8270DEL	205-99-2	Benzo[b]fluoranthene	1600	ug/Kg		2.9	MDL	1
460-52376-10	NVF-SBPAH38-A	8270DEL	56-55-3	Benzo[a]anthracene	1500	ug/Kg		3.2	MDL	1
460-52376-10	NVF-SBPAH38-A	8270DEL	120-12-7	Anthracene	600	ug/Kg		56	MDL	1
460-52376-10	NVF-SBPAH38-A	8270DEL	208-96-8	Acenaphthylene	54	ug/Kg	U	54	MDL	1
460-52376-10	NVF-SBPAH38-A	Moisture	N/A	Percent Solids	72.1	%		1	MDL	1
460-52376-10	NVF-SBPAH38-A	Moisture	N/A	Percent Moisture	27.9	%		1	MDL	1
460-52376-11	NVF-SBPAH39-A	8270DEL	56-55-3	Benzo[a]anthracene	3	ug/Kg	U	3	MDL	1
460-52376-11	NVF-SBPAH39-A	8270DEL	191-24-2	Benzo[g,h,i]perylene	31	ug/Kg	U	31	MDL	1
460-52376-11	NVF-SBPAH39-A	Moisture	N/A	Percent Solids	78.2	%		1	MDL	1
460-52376-11	NVF-SBPAH39-A	8270DEL	120-12-7	Anthracene	51	ug/Kg	U	51	MDL	1
460-52376-11	NVF-SBPAH39-A	Moisture	N/A	Percent Moisture	21.8	%		1	MDL	1
460-52376-11	NVF-SBPAH39-A	8270DEL	91-58-7	2-Chloronaphthalene	47	ug/Kg	U	47	MDL	1
460-52376-11	NVF-SBPAH39-A	8270DEL	91-57-6	2-Methylnaphthalene	54	ug/Kg	U	54	MDL	1
460-52376-11	NVF-SBPAH39-A	8270DEL	50-32-8	Benzo[a]pyrene	3	ug/Kg	U	3	MDL	1
460-52376-11	NVF-SBPAH39-A	8270DEL	207-08-9	Benzo[k]fluoranthene	3.2	ug/Kg	U	3.2	MDL	1
460-52376-11	NVF-SBPAH39-A	8270DEL	205-99-2	Benzo[b]fluoranthene	24	ug/Kg	J	2.7	MDL	1
460-52376-11	NVF-SBPAH39-A	8270DEL	53-70-3	Dibenz(a,h)anthracene	5.3	ug/Kg	U	5.3	MDL	1
460-52376-11	NVF-SBPAH39-A	8270DEL	85-01-8	Phenanthrene	54	ug/Kg	U	54	MDL	1
460-52376-11	NVF-SBPAH39-A	8270DEL	218-01-9	Chrysene	49	ug/Kg	U	49	MDL	1
460-52376-11	NVF-SBPAH39-A	8270DEL	206-44-0	Fluoranthene	56	ug/Kg	U	56	MDL	1
460-52376-11	NVF-SBPAH39-A	8270DEL	91-20-3	Naphthalene	49	ug/Kg	U	49	MDL	1
460-52376-11	NVF-SBPAH39-A	8270DEL	86-73-7	Fluorene	54	ug/Kg	U	54	MDL	1
460-52376-11	NVF-SBPAH39-A	8270DEL	208-96-8	Acenaphthylene	50	ug/Kg	U	50	MDL	1
460-52376-11	NVF-SBPAH39-A	8270DEL	129-00-0	Pyrene	35	ug/Kg	U	35	MDL	1
460-52376-11	NVF-SBPAH39-A	8270DEL	83-32-9	Acenaphthene	62	ug/Kg	U	62	MDL	1
460-52376-11	NVF-SBPAH39-A	8270DEL	193-39-5	Indeno[1,2,3-cd]pyrene	7.9	ug/Kg	U	7.9	MDL	1
460-52376-12	NVF-SBPAH40-A	8270DEL	193-39-5	Indeno[1,2,3-cd]pyrene	300	ug/Kg		8.3	MDL	1
460-52376-12	NVF-SBPAH40-A	Moisture	N/A	Percent Moisture	26.2	%		1	MDL	1
460-52376-12	NVF-SBPAH40-A	Moisture	N/A	Percent Solids	73.8	%		1	MDL	1
460-52376-12	NVF-SBPAH40-A	8270DEL	208-96-8	Acenaphthylene	53	ug/Kg	U	53	MDL	1
460-52376-12	NVF-SBPAH40-A	8270DEL	120-12-7	Anthracene	160	ug/Kg	J	54	MDL	1
460-52376-12	NVF-SBPAH40-A	8270DEL	56-55-3	Benzo[a]anthracene	450	ug/Kg		3.1	MDL	1

460-52376-12	NVF-SBPAH40-A	8270DEL	205-99-2	Benzo[b]fluoranthene	580	ug/Kg		2.8	MDL	1
460-52376-12	NVF-SBPAH40-A	8270DEL	50-32-8	Benzo[a]pyrene	440	ug/Kg		3.2	MDL	1
460-52376-12	NVF-SBPAH40-A	8270DEL	191-24-2	Benzo[g,h,i]perylene	310	ug/Kg	J	33	MDL	1
460-52376-12	NVF-SBPAH40-A	8270DEL	207-08-9	Benzo[k]fluoranthene	230	ug/Kg		3.4	MDL	1
460-52376-12	NVF-SBPAH40-A	8270DEL	206-44-0	Fluoranthene	660	ug/Kg		60	MDL	1
460-52376-12	NVF-SBPAH40-A	8270DEL	129-00-0	Pyrene	880	ug/Kg		37	MDL	1
460-52376-12	NVF-SBPAH40-A	8270DEL	53-70-3	Dibenz(a,h)anthracene	82	ug/Kg		5.6	MDL	1
460-52376-12	NVF-SBPAH40-A	8270DEL	85-01-8	Phenanthrene	630	ug/Kg		57	MDL	1
460-52376-12	NVF-SBPAH40-A	8270DEL	91-20-3	Naphthalene	69	ug/Kg	J	52	MDL	1
460-52376-12	NVF-SBPAH40-A	8270DEL	91-58-7	2-Chloronaphthalene	50	ug/Kg	U	50	MDL	1
460-52376-12	NVF-SBPAH40-A	8270DEL	218-01-9	Chrysene	400	ug/Kg	J	52	MDL	1
460-52376-12	NVF-SBPAH40-A	8270DEL	86-73-7	Fluorene	84	ug/Kg	J	57	MDL	1
460-52376-12	NVF-SBPAH40-A	8270DEL	91-57-6	2-Methylnaphthalene	80	ug/Kg	J	57	MDL	1
460-52376-12	NVF-SBPAH40-A	8270DEL	83-32-9	Acenaphthene	110	ug/Kg	J	65	MDL	1
460-52376-13	NVF-SBPAH41-A	8270DEL	91-20-3	Naphthalene	50	ug/Kg	U	50	MDL	1
460-52376-13	NVF-SBPAH41-A	Moisture	N/A	Percent Moisture	24	%		1	MDL	1
460-52376-13	NVF-SBPAH41-A	Moisture	N/A	Percent Solids	76	%		1	MDL	1
460-52376-13	NVF-SBPAH41-A	8270DEL	208-96-8	Acenaphthylene	51	ug/Kg	U	51	MDL	1
460-52376-13	NVF-SBPAH41-A	8270DEL	120-12-7	Anthracene	650	ug/Kg		53	MDL	1
460-52376-13	NVF-SBPAH41-A	8270DEL	50-32-8	Benzo[a]pyrene	1700	ug/Kg		3.1	MDL	1
460-52376-13	NVF-SBPAH41-A	8270DEL	205-99-2	Benzo[b]fluoranthene	2300	ug/Kg		2.8	MDL	1
460-52376-13	NVF-SBPAH41-A	8270DEL	207-08-9	Benzo[k]fluoranthene	840	ug/Kg		3.3	MDL	1
460-52376-13	NVF-SBPAH41-A	8270DEL	56-55-3	Benzo[a]anthracene	1900	ug/Kg		3	MDL	1
460-52376-13	NVF-SBPAH41-A	8270DEL	191-24-2	Benzo[g,h,i]perylene	990	ug/Kg		32	MDL	1
460-52376-13	NVF-SBPAH41-A	8270DEL	218-01-9	Chrysene	1900	ug/Kg		51	MDL	1
460-52376-13	NVF-SBPAH41-A	8270DEL	53-70-3	Dibenz(a,h)anthracene	330	ug/Kg		5.5	MDL	1
460-52376-13	NVF-SBPAH41-A	8270DEL	206-44-0	Fluoranthene	3200	ug/Kg		58	MDL	1
460-52376-13	NVF-SBPAH41-A	8270DEL	85-01-8	Phenanthrene	2700	ug/Kg		55	MDL	1
460-52376-13	NVF-SBPAH41-A	8270DEL	129-00-0	Pyrene	4300	ug/Kg		36	MDL	1
460-52376-13	NVF-SBPAH41-A	8270DEL	86-73-7	Fluorene	250	ug/Kg	J	56	MDL	1
460-52376-13	NVF-SBPAH41-A	8270DEL	83-32-9	Acenaphthene	260	ug/Kg	J	63	MDL	1
460-52376-13	NVF-SBPAH41-A	8270DEL	193-39-5	Indeno[1,2,3-cd]pyrene	1100	ug/Kg		8.1	MDL	1
460-52376-13	NVF-SBPAH41-A	8270DEL	91-58-7	2-Chloronaphthalene	49	ug/Kg	U	49	MDL	1
460-52376-13	NVF-SBPAH41-A	8270DEL	91-57-6	2-Methylnaphthalene	56	ug/Kg	U	56	MDL	1

460-52376-14	NVF-SBPAH42-A	8270DEL	83-32-9	Acenaphthene	440	ug/Kg		51	MDL	1
460-52376-14	NVF-SBPAH42-A	8270DEL	91-58-7	2-Chloronaphthalene	39	ug/Kg	U	39	MDL	1
460-52376-14	NVF-SBPAH42-A	8270DEL	206-44-0	Fluoranthene	1900	ug/Kg		46	MDL	1
460-52376-14	NVF-SBPAH42-A	8270DEL	120-12-7	Anthracene	540	ug/Kg		42	MDL	1
460-52376-14	NVF-SBPAH42-A	8270DEL	208-96-8	Acenaphthylene	41	ug/Kg	U	41	MDL	1
460-52376-14	NVF-SBPAH42-A	8270DEL	193-39-5	Indeno[1,2,3-cd]pyrene	560	ug/Kg		6.5	MDL	1
460-52376-14	NVF-SBPAH42-A	8270DEL	129-00-0	Pyrene	2200	ug/Kg		29	MDL	1
460-52376-14	NVF-SBPAH42-A	8270DEL	85-01-8	Phenanthrene	1900	ug/Kg		44	MDL	1
460-52376-14	NVF-SBPAH42-A	8270DEL	91-57-6	2-Methylnaphthalene	80	ug/Kg	J	45	MDL	1
460-52376-14	NVF-SBPAH42-A	8270DEL	86-73-7	Fluorene	250	ug/Kg	J	44	MDL	1
460-52376-14	NVF-SBPAH42-A	8270DEL	53-70-3	Dibenz(a,h)anthracene	120	ug/Kg		4.4	MDL	1
460-52376-14	NVF-SBPAH42-A	8270DEL	218-01-9	Chrysene	960	ug/Kg		41	MDL	1
460-52376-14	NVF-SBPAH42-A	8270DEL	205-99-2	Benzo[b]fluoranthene	960	ug/Kg		2.2	MDL	1
460-52376-14	NVF-SBPAH42-A	8270DEL	191-24-2	Benzo[g,h,i]perylene	590	ug/Kg		26	MDL	1
460-52376-14	NVF-SBPAH42-A	8270DEL	50-32-8	Benzo[a]pyrene	730	ug/Kg		2.5	MDL	1
460-52376-14	NVF-SBPAH42-A	8270DEL	91-20-3	Naphthalene	170	ug/Kg	J	40	MDL	1
460-52376-14	NVF-SBPAH42-A	8270DEL	56-55-3	Benzo[a]anthracene	920	ug/Kg		2.4	MDL	1
460-52376-14	NVF-SBPAH42-A	Moisture	N/A	Percent Moisture	5.1	%		1	MDL	1
460-52376-14	NVF-SBPAH42-A	8270DEL	207-08-9	Benzo[k]fluoranthene	440	ug/Kg		2.6	MDL	1
460-52376-14	NVF-SBPAH42-A	Moisture	N/A	Percent Solids	94.9	%		1	MDL	1
460-52376-15	NVF-SBPAH43-A	8270DEL	91-20-3	Naphthalene	53	ug/Kg	U	53	MDL	1
460-52376-15	NVF-SBPAH43-A	Moisture	N/A	Percent Moisture	28	%		1	MDL	1
460-52376-15	NVF-SBPAH43-A	Moisture	N/A	Percent Solids	72	%		1	MDL	1
460-52376-15	NVF-SBPAH43-A	8270DEL	208-96-8	Acenaphthylene	54	ug/Kg	U	54	MDL	1
460-52376-15	NVF-SBPAH43-A	8270DEL	120-12-7	Anthracene	900	ug/Kg		56	MDL	1
460-52376-15	NVF-SBPAH43-A	8270DEL	50-32-8	Benzo[a]pyrene	1100	ug/Kg		3.3	MDL	1
460-52376-15	NVF-SBPAH43-A	8270DEL	205-99-2	Benzo[b]fluoranthene	1400	ug/Kg		2.9	MDL	1
460-52376-15	NVF-SBPAH43-A	8270DEL	207-08-9	Benzo[k]fluoranthene	520	ug/Kg		3.5	MDL	1
460-52376-15	NVF-SBPAH43-A	8270DEL	56-55-3	Benzo[a]anthracene	1600	ug/Kg		3.2	MDL	1
460-52376-15	NVF-SBPAH43-A	8270DEL	191-24-2	Benzo[g,h,i]perylene	840	ug/Kg		34	MDL	1
460-52376-15	NVF-SBPAH43-A	8270DEL	218-01-9	Chrysene	1500	ug/Kg		54	MDL	1
460-52376-15	NVF-SBPAH43-A	8270DEL	53-70-3	Dibenz(a,h)anthracene	210	ug/Kg		5.8	MDL	1
460-52376-15	NVF-SBPAH43-A	8270DEL	206-44-0	Fluoranthene	2800	ug/Kg		61	MDL	1
460-52376-15	NVF-SBPAH43-A	8270DEL	85-01-8	Phenanthrene	2900	ug/Kg		59	MDL	1

460-52376-15	NVF-SBPAH43-A	8270DEL	129-00-0	Pyrene	3000	ug/Kg		38	MDL	1
460-52376-15	NVF-SBPAH43-A	8270DEL	86-73-7	Fluorene	380	ug/Kg	J	59	MDL	1
460-52376-15	NVF-SBPAH43-A	8270DEL	83-32-9	Acenaphthene	330	ug/Kg	J	67	MDL	1
460-52376-15	NVF-SBPAH43-A	8270DEL	193-39-5	Indeno[1,2,3-cd]pyrene	800	ug/Kg		8.5	MDL	1
460-52376-15	NVF-SBPAH43-A	8270DEL	91-58-7	2-Chloronaphthalene	51	ug/Kg	U	51	MDL	1
460-52376-15	NVF-SBPAH43-A	8270DEL	91-57-6	2-Methylnaphthalene	59	ug/Kg	U	59	MDL	1
460-52376-16	NVF-SBPAH44-A	Moisture	N/A	Percent Solids	79.2	%		1	MDL	1
460-52376-16	NVF-SBPAH44-A	Moisture	N/A	Percent Moisture	20.8	%		1	MDL	1
460-52376-17	NVF-SBPAH944-A	Moisture	N/A	Percent Solids	81.3	%		1	MDL	1
460-52376-17	NVF-SBPAH944-A	Moisture	N/A	Percent Moisture	18.8	%		1	MDL	1
460-52376-18	NVF-SBPAH45-A	Moisture	N/A	Percent Solids	78.5	%		1	MDL	1
460-52376-18	NVF-SBPAH45-A	8270DEL	208-96-8	Acenaphthylene	50	ug/Kg	U	50	MDL	1
460-52376-18	NVF-SBPAH45-A	8270DEL	120-12-7	Anthracene	590	ug/Kg		51	MDL	1
460-52376-18	NVF-SBPAH45-A	8270DEL	56-55-3	Benzo[a]anthracene	1200	ug/Kg		2.9	MDL	1
460-52376-18	NVF-SBPAH45-A	8270DEL	205-99-2	Benzo[b]fluoranthene	1100	ug/Kg		2.7	MDL	1
460-52376-18	NVF-SBPAH45-A	8270DEL	50-32-8	Benzo[a]pyrene	880	ug/Kg		3	MDL	1
460-52376-18	NVF-SBPAH45-A	8270DEL	191-24-2	Benzo[g,h,i]perylene	560	ug/Kg		31	MDL	1
460-52376-18	NVF-SBPAH45-A	8270DEL	207-08-9	Benzo[k]fluoranthene	590	ug/Kg		3.2	MDL	1
460-52376-18	NVF-SBPAH45-A	8270DEL	218-01-9	Chrysene	1200	ug/Kg		49	MDL	1
460-52376-18	NVF-SBPAH45-A	8270DEL	53-70-3	Dibenz(a,h)anthracene	170	ug/Kg		5.3	MDL	1
460-52376-18	NVF-SBPAH45-A	8270DEL	206-44-0	Fluoranthene	2500	ug/Kg		56	MDL	1
460-52376-18	NVF-SBPAH45-A	8270DEL	91-20-3	Naphthalene	170	ug/Kg	J	49	MDL	1
460-52376-18	NVF-SBPAH45-A	8270DEL	85-01-8	Phenanthrene	2100	ug/Kg		54	MDL	1
460-52376-18	NVF-SBPAH45-A	8270DEL	129-00-0	Pyrene	2900	ug/Kg		35	MDL	1
460-52376-18	NVF-SBPAH45-A	8270DEL	86-73-7	Fluorene	240	ug/Kg	J	54	MDL	1
460-52376-18	NVF-SBPAH45-A	8270DEL	83-32-9	Acenaphthene	310	ug/Kg	J	61	MDL	1
460-52376-18	NVF-SBPAH45-A	8270DEL	193-39-5	Indeno[1,2,3-cd]pyrene	560	ug/Kg		7.8	MDL	1
460-52376-18	NVF-SBPAH45-A	8270DEL	91-58-7	2-Chloronaphthalene	47	ug/Kg	U	47	MDL	1
460-52376-18	NVF-SBPAH45-A	8270DEL	91-57-6	2-Methylnaphthalene	96	ug/Kg	J	54	MDL	1
460-52376-18	NVF-SBPAH45-A	Moisture	N/A	Percent Moisture	21.5	%		1	MDL	1
460-52376-19	NVF-SBPAH46-A	Moisture	N/A	Percent Solids	78.5	%		1	MDL	1
460-52376-19	NVF-SBPAH46-A	8270DEL	56-55-3	Benzo[a]anthracene	3000	ug/Kg		2.9	MDL	1
460-52376-19	NVF-SBPAH46-A	Moisture	N/A	Percent Moisture	21.5	%		1	MDL	1
460-52376-19	NVF-SBPAH46-A	8270DEL	208-96-8	Acenaphthylene	50	ug/Kg	U	50	MDL	1

460-52376-19	NVF-SBPAH46-A	8270DEL	120-12-7	Anthracene	1600	ug/Kg		51	MDL	1
460-52376-19	NVF-SBPAH46-A	8270DEL	191-24-2	Benzo[g,h,i]perylene	1100	ug/Kg		31	MDL	1
460-52376-19	NVF-SBPAH46-A	8270DEL	91-57-6	2-Methylnaphthalene	80	ug/Kg	J	54	MDL	1
460-52376-19	NVF-SBPAH46-A	8270DEL	50-32-8	Benzo[a]pyrene	2300	ug/Kg		3	MDL	1
460-52376-19	NVF-SBPAH46-A	8270DEL	207-08-9	Benzo[k]fluoranthene	1200	ug/Kg		3.2	MDL	1
460-52376-19	NVF-SBPAH46-A	8270DEL	218-01-9	Chrysene	2700	ug/Kg		49	MDL	1
460-52376-19	NVF-SBPAH46-A	8270DEL	85-01-8	Phenanthrene	5100	ug/Kg		54	MDL	1
460-52376-19	NVF-SBPAH46-A	8270DEL	91-58-7	2-Chloronaphthalene	47	ug/Kg	U	47	MDL	1
460-52376-19	NVF-SBPAH46-A	8270DEL	91-20-3	Naphthalene	50	ug/Kg	J	49	MDL	1
460-52376-19	NVF-SBPAH46-A	8270DEL	129-00-0	Pyrene	6200	ug/Kg		35	MDL	1
460-52376-19	NVF-SBPAH46-A	8270DEL	206-44-0	Fluoranthene	5500	ug/Kg		56	MDL	1
460-52376-19	NVF-SBPAH46-A	8270DEL	83-32-9	Acenaphthene	570	ug/Kg		61	MDL	1
460-52376-19	NVF-SBPAH46-A	8270DEL	53-70-3	Dibenz(a,h)anthracene	340	ug/Kg		5.3	MDL	1
460-52376-19	NVF-SBPAH46-A	8270DEL	86-73-7	Fluorene	670	ug/Kg		54	MDL	1
460-52376-19	NVF-SBPAH46-A	8270DEL	205-99-2	Benzo[b]fluoranthene	2600	ug/Kg		2.7	MDL	1
460-52376-19	NVF-SBPAH46-A	8270DEL	193-39-5	Indeno[1,2,3-cd]pyrene	1200	ug/Kg		7.8	MDL	1
460-52376-2	NVF-SBPAH31-A	Moisture	N/A	Percent Moisture	28.8	%		1	MDL	1
460-52376-2	NVF-SBPAH31-A	Moisture	N/A	Percent Solids	71.2	%		1	MDL	1
460-52376-20	NVF-SBFB01	8270DEL	91-58-7	2-Chloronaphthalene	37	ug/Kg	U	37	MDL	1
460-52376-20	NVF-SBFB01	8270DEL	86-73-7	Fluorene	42	ug/Kg	U	42	MDL	1
460-52376-20	NVF-SBFB01	8270DEL	91-57-6	2-Methylnaphthalene	42	ug/Kg	U	42	MDL	1
460-52376-20	NVF-SBFB01	8270DEL	193-39-5	Indeno[1,2,3-cd]pyrene	6.1	ug/Kg	U	6.1	MDL	1
460-52376-20	NVF-SBFB01	8270DEL	83-32-9	Acenaphthene	48	ug/Kg	U	48	MDL	1
460-52376-20	NVF-SBFB01	8270DEL	85-01-8	Phenanthrene	42	ug/Kg	U	42	MDL	1
460-52376-20	NVF-SBFB01	Moisture	N/A	Percent Moisture	1	%	U	1	MDL	1
460-52376-20	NVF-SBFB01	8270DEL	129-00-0	Pyrene	28	ug/Kg	U	28	MDL	1
460-52376-20	NVF-SBFB01	8270DEL	91-20-3	Naphthalene	38	ug/Kg	U	38	MDL	1
460-52376-20	NVF-SBFB01	8270DEL	206-44-0	Fluoranthene	44	ug/Kg	U	44	MDL	1
460-52376-20	NVF-SBFB01	8270DEL	207-08-9	Benzo[k]fluoranthene	2.5	ug/Kg	U	2.5	MDL	1
460-52376-20	NVF-SBFB01	8270DEL	205-99-2	Benzo[b]fluoranthene	2.1	ug/Kg	U	2.1	MDL	1
460-52376-20	NVF-SBFB01	8270DEL	218-01-9	Chrysene	39	ug/Kg	U	39	MDL	1
460-52376-20	NVF-SBFB01	8270DEL	191-24-2	Benzo[g,h,i]perylene	24	ug/Kg	U	24	MDL	1
460-52376-20	NVF-SBFB01	8270DEL	50-32-8	Benzo[a]pyrene	2.3	ug/Kg	U	2.3	MDL	1
460-52376-20	NVF-SBFB01	8270DEL	120-12-7	Anthracene	40	ug/Kg	U	40	MDL	1

460-52376-20	NVF-SBFB01	8270DEL	53-70-3	Dibenz(a,h)anthracene	4.2	ug/Kg	U	4.2	MDL	1
460-52376-20	NVF-SBFB01	8270DEL	56-55-3	Benzo[a]anthracene	2.3	ug/Kg	U	2.3	MDL	1
460-52376-20	NVF-SBFB01	8270DEL	208-96-8	Acenaphthylene	39	ug/Kg	U	39	MDL	1
460-52376-20	NVF-SBFB01	Moisture	N/A	Percent Solids	100	%		1	MDL	1
460-52376-21	NVF-SBFB02	Moisture	N/A	Percent Moisture	1	%	U	1	MDL	1
460-52376-21	NVF-SBFB02	Moisture	N/A	Percent Solids	100	%		1	MDL	1
460-52376-22	NVF-SBFB03	Moisture	N/A	Percent Moisture	1	%	U	1	MDL	1
460-52376-22	NVF-SBFB03	Moisture	N/A	Percent Solids	100	%		1	MDL	1
460-52376-23	NVF-SBPAH47-A	8270DEL	191-24-2	Benzo[g,h,i]perylene	41	ug/Kg	J	34	MDL	1
460-52376-23	NVF-SBPAH47-A	8270DEL	206-44-0	Fluoranthene	120	ug/Kg	J	61	MDL	1
460-52376-23	NVF-SBPAH47-A	8270DEL	120-12-7	Anthracene	55	ug/Kg	U	55	MDL	1
460-52376-23	NVF-SBPAH47-A	8270DEL	56-55-3	Benzo[a]anthracene	64	ug/Kg		3.2	MDL	1
460-52376-23	NVF-SBPAH47-A	8270DEL	208-96-8	Acenaphthylene	54	ug/Kg	U	54	MDL	1
460-52376-23	NVF-SBPAH47-A	8270DEL	218-01-9	Chrysene	82	ug/Kg	J	53	MDL	1
460-52376-23	NVF-SBPAH47-A	Moisture	N/A	Percent Moisture	27.4	%		1	MDL	1
460-52376-23	NVF-SBPAH47-A	8270DEL	207-08-9	Benzo[k]fluoranthene	31	ug/Kg	J	3.5	MDL	1
460-52376-23	NVF-SBPAH47-A	8270DEL	91-20-3	Naphthalene	53	ug/Kg	U	53	MDL	1
460-52376-23	NVF-SBPAH47-A	8270DEL	53-70-3	Dibenz(a,h)anthracene	5.7	ug/Kg	U	5.7	MDL	1
460-52376-23	NVF-SBPAH47-A	8270DEL	193-39-5	Indeno[1,2,3-cd]pyrene	40	ug/Kg	J	8.5	MDL	1
460-52376-23	NVF-SBPAH47-A	Moisture	N/A	Percent Solids	72.6	%		1	MDL	1
460-52376-23	NVF-SBPAH47-A	8270DEL	129-00-0	Pyrene	120	ug/Kg	J	38	MDL	1
460-52376-23	NVF-SBPAH47-A	8270DEL	83-32-9	Acenaphthene	66	ug/Kg	U	66	MDL	1
460-52376-23	NVF-SBPAH47-A	8270DEL	86-73-7	Fluorene	58	ug/Kg	U	58	MDL	1
460-52376-23	NVF-SBPAH47-A	8270DEL	205-99-2	Benzo[b]fluoranthene	76	ug/Kg		2.9	MDL	1
460-52376-23	NVF-SBPAH47-A	8270DEL	50-32-8	Benzo[a]pyrene	50	ug/Kg		3.2	MDL	1
460-52376-23	NVF-SBPAH47-A	8270DEL	85-01-8	Phenanthrene	78	ug/Kg	J	58	MDL	1
460-52376-23	NVF-SBPAH47-A	8270DEL	91-57-6	2-Methylnaphthalene	58	ug/Kg	U	58	MDL	1
460-52376-23	NVF-SBPAH47-A	8270DEL	91-58-7	2-Chloronaphthalene	51	ug/Kg	U	51	MDL	1
460-52376-24	NVF-SBPAH48-A	8270DEL	91-58-7	2-Chloronaphthalene	50	ug/Kg	U	50	MDL	1
460-52376-24	NVF-SBPAH48-A	8270DEL	86-73-7	Fluorene	58	ug/Kg	U	58	MDL	1
460-52376-24	NVF-SBPAH48-A	8270DEL	91-57-6	2-Methylnaphthalene	58	ug/Kg	U	58	MDL	1
460-52376-24	NVF-SBPAH48-A	8270DEL	193-39-5	Indeno[1,2,3-cd]pyrene	35	ug/Kg	J	8.4	MDL	1
460-52376-24	NVF-SBPAH48-A	8270DEL	83-32-9	Acenaphthene	66	ug/Kg	U	66	MDL	1
460-52376-24	NVF-SBPAH48-A	8270DEL	85-01-8	Phenanthrene	57	ug/Kg	U	57	MDL	1

460-52376-24	NVF-SBPAH48-A	Moisture	N/A	Percent Moisture	26.5	%		1	MDL	1
460-52376-24	NVF-SBPAH48-A	8270DEL	129-00-0	Pyrene	91	ug/Kg	J	38	MDL	1
460-52376-24	NVF-SBPAH48-A	8270DEL	91-20-3	Naphthalene	52	ug/Kg	U	52	MDL	1
460-52376-24	NVF-SBPAH48-A	8270DEL	206-44-0	Fluoranthene	73	ug/Kg	J	60	MDL	1
460-52376-24	NVF-SBPAH48-A	8270DEL	207-08-9	Benzo[k]fluoranthene	33	ug/Kg	J	3.4	MDL	1
460-52376-24	NVF-SBPAH48-A	8270DEL	205-99-2	Benzo[b]fluoranthene	58	ug/Kg		2.8	MDL	1
460-52376-24	NVF-SBPAH48-A	8270DEL	218-01-9	Chrysene	64	ug/Kg	J	53	MDL	1
460-52376-24	NVF-SBPAH48-A	8270DEL	191-24-2	Benzo[g,h,i]perylene	36	ug/Kg	J	33	MDL	1
460-52376-24	NVF-SBPAH48-A	8270DEL	50-32-8	Benzo[a]pyrene	48	ug/Kg		3.2	MDL	1
460-52376-24	NVF-SBPAH48-A	8270DEL	120-12-7	Anthracene	55	ug/Kg	U	55	MDL	1
460-52376-24	NVF-SBPAH48-A	8270DEL	53-70-3	Dibenz(a,h)anthracene	5.7	ug/Kg	U	5.7	MDL	1
460-52376-24	NVF-SBPAH48-A	8270DEL	56-55-3	Benzo[a]anthracene	52	ug/Kg		3.1	MDL	1
460-52376-24	NVF-SBPAH48-A	8270DEL	208-96-8	Acenaphthylene	53	ug/Kg	U	53	MDL	1
460-52376-24	NVF-SBPAH48-A	Moisture	N/A	Percent Solids	73.5	%		1	MDL	1
460-52376-25	NVF-SBPAH49-A	8270DEL	91-58-7	2-Chloronaphthalene	47	ug/Kg	U	47	MDL	1
460-52376-25	NVF-SBPAH49-A	8270DEL	86-73-7	Fluorene	350	ug/Kg	J	54	MDL	1
460-52376-25	NVF-SBPAH49-A	8270DEL	91-57-6	2-Methylnaphthalene	91	ug/Kg	J	54	MDL	1
460-52376-25	NVF-SBPAH49-A	8270DEL	193-39-5	Indeno[1,2,3-cd]pyrene	1600	ug/Kg		7.8	MDL	1
460-52376-25	NVF-SBPAH49-A	8270DEL	83-32-9	Acenaphthene	220	ug/Kg	J	61	MDL	1
460-52376-25	NVF-SBPAH49-A	8270DEL	85-01-8	Phenanthrene	3100	ug/Kg		54	MDL	1
460-52376-25	NVF-SBPAH49-A	Moisture	N/A	Percent Moisture	21.5	%		1	MDL	1
460-52376-25	NVF-SBPAH49-A	8270DEL	129-00-0	Pyrene	4600	ug/Kg		35	MDL	1
460-52376-25	NVF-SBPAH49-A	8270DEL	91-20-3	Naphthalene	81	ug/Kg	J	49	MDL	1
460-52376-25	NVF-SBPAH49-A	8270DEL	206-44-0	Fluoranthene	3300	ug/Kg		56	MDL	1
460-52376-25	NVF-SBPAH49-A	8270DEL	207-08-9	Benzo[k]fluoranthene	1200	ug/Kg		3.2	MDL	1
460-52376-25	NVF-SBPAH49-A	8270DEL	205-99-2	Benzo[b]fluoranthene	2300	ug/Kg		2.7	MDL	1
460-52376-25	NVF-SBPAH49-A	8270DEL	218-01-9	Chrysene	2400	ug/Kg		49	MDL	1
460-52376-25	NVF-SBPAH49-A	8270DEL	191-24-2	Benzo[g,h,i]perylene	1500	ug/Kg		31	MDL	1
460-52376-25	NVF-SBPAH49-A	8270DEL	50-32-8	Benzo[a]pyrene	2100	ug/Kg		3	MDL	1
460-52376-25	NVF-SBPAH49-A	8270DEL	120-12-7	Anthracene	930	ug/Kg		51	MDL	1
460-52376-25	NVF-SBPAH49-A	8270DEL	53-70-3	Dibenz(a,h)anthracene	380	ug/Kg		5.3	MDL	1
460-52376-25	NVF-SBPAH49-A	8270DEL	56-55-3	Benzo[a]anthracene	2200	ug/Kg		2.9	MDL	1
460-52376-25	NVF-SBPAH49-A	8270DEL	208-96-8	Acenaphthylene	180	ug/Kg	J	50	MDL	1
460-52376-25	NVF-SBPAH49-A	Moisture	N/A	Percent Solids	78.5	%		1	MDL	1

460-52376-26	NVF-SBPAH50-A	8270DEL	208-96-8	Acenaphthylene	53	ug/Kg	U	53	MDL	1
460-52376-26	NVF-SBPAH50-A	8270DEL	120-12-7	Anthracene	54	ug/Kg	U	54	MDL	1
460-52376-26	NVF-SBPAH50-A	8270DEL	56-55-3	Benzo[a]anthracene	47	ug/Kg		3.1	MDL	1
460-52376-26	NVF-SBPAH50-A	8270DEL	205-99-2	Benzo[b]fluoranthene	48	ug/Kg		2.8	MDL	1
460-52376-26	NVF-SBPAH50-A	8270DEL	50-32-8	Benzo[a]pyrene	36	ug/Kg	J	3.1	MDL	1
460-52376-26	NVF-SBPAH50-A	8270DEL	191-24-2	Benzo[g,h,i]perylene	33	ug/Kg	U	33	MDL	1
460-52376-26	NVF-SBPAH50-A	8270DEL	207-08-9	Benzo[k]fluoranthene	27	ug/Kg	J	3.4	MDL	1
460-52376-26	NVF-SBPAH50-A	8270DEL	218-01-9	Chrysene	62	ug/Kg	J	52	MDL	1
460-52376-26	NVF-SBPAH50-A	8270DEL	53-70-3	Dibenz(a,h)anthracene	5.6	ug/Kg	U	5.6	MDL	1
460-52376-26	NVF-SBPAH50-A	8270DEL	206-44-0	Fluoranthene	80	ug/Kg	J	59	MDL	1
460-52376-26	NVF-SBPAH50-A	8270DEL	91-20-3	Naphthalene	51	ug/Kg	U	51	MDL	1
460-52376-26	NVF-SBPAH50-A	8270DEL	85-01-8	Phenanthrene	57	ug/Kg	U	57	MDL	1
460-52376-26	NVF-SBPAH50-A	8270DEL	129-00-0	Pyrene	67	ug/Kg	J	37	MDL	1
460-52376-26	NVF-SBPAH50-A	8270DEL	86-73-7	Fluorene	57	ug/Kg	U	57	MDL	1
460-52376-26	NVF-SBPAH50-A	8270DEL	83-32-9	Acenaphthene	65	ug/Kg	U	65	MDL	1
460-52376-26	NVF-SBPAH50-A	8270DEL	193-39-5	Indeno[1,2,3-cd]pyrene	28	ug/Kg	J	8.3	MDL	1
460-52376-26	NVF-SBPAH50-A	8270DEL	91-58-7	2-Chloronaphthalene	50	ug/Kg	U	50	MDL	1
460-52376-26	NVF-SBPAH50-A	8270DEL	91-57-6	2-Methylnaphthalene	57	ug/Kg	U	57	MDL	1
460-52376-26	NVF-SBPAH50-A	Moisture	N/A	Percent Moisture	25.7	%		1	MDL	1
460-52376-26	NVF-SBPAH50-A	Moisture	N/A	Percent Solids	74.3	%		1	MDL	1
460-52376-27	NVF-SBPAH51-A	Moisture	N/A	Percent Moisture	34.6	%		1	MDL	1
460-52376-27	NVF-SBPAH51-A	8270DEL	193-39-5	Indeno[1,2,3-cd]pyrene	64	ug/Kg		9.4	MDL	1
460-52376-27	NVF-SBPAH51-A	8270DEL	208-96-8	Acenaphthylene	60	ug/Kg	U	60	MDL	1
460-52376-27	NVF-SBPAH51-A	8270DEL	83-32-9	Acenaphthene	74	ug/Kg	U	74	MDL	1
460-52376-27	NVF-SBPAH51-A	Moisture	N/A	Percent Solids	65.4	%		1	MDL	1
460-52376-27	NVF-SBPAH51-A	8270DEL	205-99-2	Benzo[b]fluoranthene	98	ug/Kg		3.2	MDL	1
460-52376-27	NVF-SBPAH51-A	8270DEL	56-55-3	Benzo[a]anthracene	91	ug/Kg		3.5	MDL	1
460-52376-27	NVF-SBPAH51-A	8270DEL	191-24-2	Benzo[g,h,i]perylene	60	ug/Kg	J	37	MDL	1
460-52376-27	NVF-SBPAH51-A	8270DEL	120-12-7	Anthracene	61	ug/Kg	U	61	MDL	1
460-52376-27	NVF-SBPAH51-A	8270DEL	50-32-8	Benzo[a]pyrene	72	ug/Kg		3.6	MDL	1
460-52376-27	NVF-SBPAH51-A	8270DEL	207-08-9	Benzo[k]fluoranthene	52	ug/Kg		3.8	MDL	1
460-52376-27	NVF-SBPAH51-A	8270DEL	218-01-9	Chrysene	120	ug/Kg	J	59	MDL	1
460-52376-27	NVF-SBPAH51-A	8270DEL	53-70-3	Dibenz(a,h)anthracene	6.4	ug/Kg	U	6.4	MDL	1
460-52376-27	NVF-SBPAH51-A	8270DEL	206-44-0	Fluoranthene	160	ug/Kg	J	67	MDL	1

460-52376-27	NVF-SBPAH51-A	8270DEL	91-20-3	Naphthalene	58	ug/Kg	U	58	MDL	1
460-52376-27	NVF-SBPAH51-A	8270DEL	91-57-6	2-Methylnaphthalene	65	ug/Kg	U	65	MDL	1
460-52376-27	NVF-SBPAH51-A	8270DEL	129-00-0	Pyrene	180	ug/Kg	J	42	MDL	1
460-52376-27	NVF-SBPAH51-A	8270DEL	86-73-7	Fluorene	65	ug/Kg	U	65	MDL	1
460-52376-27	NVF-SBPAH51-A	8270DEL	85-01-8	Phenanthrene	110	ug/Kg	J	64	MDL	1
460-52376-27	NVF-SBPAH51-A	8270DEL	91-58-7	2-Chloronaphthalene	56	ug/Kg	U	56	MDL	1
460-52376-28	NVF-SBPAH52-A	8270DEL	91-57-6	2-Methylnaphthalene	60	ug/Kg	U	60	MDL	1
460-52376-28	NVF-SBPAH52-A	8270DEL	91-58-7	2-Chloronaphthalene	52	ug/Kg	U	52	MDL	1
460-52376-28	NVF-SBPAH52-A	8270DEL	83-32-9	Acenaphthene	68	ug/Kg	U	68	MDL	1
460-52376-28	NVF-SBPAH52-A	8270DEL	86-73-7	Fluorene	60	ug/Kg	U	60	MDL	1
460-52376-28	NVF-SBPAH52-A	8270DEL	129-00-0	Pyrene	78	ug/Kg	J	39	MDL	1
460-52376-28	NVF-SBPAH52-A	8270DEL	85-01-8	Phenanthrene	59	ug/Kg	U	59	MDL	1
460-52376-28	NVF-SBPAH52-A	8270DEL	91-20-3	Naphthalene	54	ug/Kg	U	54	MDL	1
460-52376-28	NVF-SBPAH52-A	8270DEL	206-44-0	Fluoranthene	62	ug/Kg	U	62	MDL	1
460-52376-28	NVF-SBPAH52-A	8270DEL	218-01-9	Chrysene	55	ug/Kg	U	55	MDL	1
460-52376-28	NVF-SBPAH52-A	8270DEL	53-70-3	Dibenz(a,h)anthracene	21	ug/Kg	J	5.9	MDL	1
460-52376-28	NVF-SBPAH52-A	8270DEL	50-32-8	Benzo[a]pyrene	44	ug/Kg	J	3.3	MDL	1
460-52376-28	NVF-SBPAH52-A	8270DEL	120-12-7	Anthracene	57	ug/Kg	U	57	MDL	1
460-52376-28	NVF-SBPAH52-A	8270DEL	191-24-2	Benzo[g,h,i]perylene	62	ug/Kg	J	35	MDL	1
460-52376-28	NVF-SBPAH52-A	8270DEL	205-99-2	Benzo[b]fluoranthene	44	ug/Kg	J	3	MDL	1
460-52376-28	NVF-SBPAH52-A	8270DEL	56-55-3	Benzo[a]anthracene	44	ug/Kg	J	3.3	MDL	1
460-52376-28	NVF-SBPAH52-A	Moisture	N/A	Percent Solids	70.7	%		1	MDL	1
460-52376-28	NVF-SBPAH52-A	8270DEL	207-08-9	Benzo[k]fluoranthene	3.5	ug/Kg	U	3.5	MDL	1
460-52376-28	NVF-SBPAH52-A	8270DEL	208-96-8	Acenaphthylene	55	ug/Kg	U	55	MDL	1
460-52376-28	NVF-SBPAH52-A	Moisture	N/A	Percent Moisture	29.3	%		1	MDL	1
460-52376-28	NVF-SBPAH52-A	8270DEL	193-39-5	Indeno[1,2,3-cd]pyrene	45	ug/Kg	J	8.7	MDL	1
460-52376-29	NVF-SBPAH53-A	8270DEL	193-39-5	Indeno[1,2,3-cd]pyrene	140	ug/Kg		9.3	MDL	1
460-52376-29	NVF-SBPAH53-A	Moisture	N/A	Percent Moisture	33.6	%		1	MDL	1
460-52376-29	NVF-SBPAH53-A	8270DEL	208-96-8	Acenaphthylene	59	ug/Kg	U	59	MDL	1
460-52376-29	NVF-SBPAH53-A	8270DEL	129-00-0	Pyrene	530	ug/Kg		42	MDL	1
460-52376-29	NVF-SBPAH53-A	Moisture	N/A	Percent Solids	66.4	%		1	MDL	1
460-52376-29	NVF-SBPAH53-A	8270DEL	56-55-3	Benzo[a]anthracene	240	ug/Kg		3.5	MDL	1
460-52376-29	NVF-SBPAH53-A	8270DEL	205-99-2	Benzo[b]fluoranthene	270	ug/Kg		3.1	MDL	1
460-52376-29	NVF-SBPAH53-A	8270DEL	191-24-2	Benzo[g,h,i]perylene	130	ug/Kg	J	37	MDL	1

460-52376-29	NVF-SBPAH53-A	8270DEL	120-12-7	Anthracene	100	ug/Kg	J	61	MDL	1
460-52376-29	NVF-SBPAH53-A	8270DEL	50-32-8	Benzo[a]pyrene	190	ug/Kg		3.5	MDL	1
460-52376-29	NVF-SBPAH53-A	8270DEL	206-44-0	Fluoranthene	510	ug/Kg		66	MDL	1
460-52376-29	NVF-SBPAH53-A	8270DEL	207-08-9	Benzo[k]fluoranthene	110	ug/Kg		3.8	MDL	1
460-52376-29	NVF-SBPAH53-A	8270DEL	53-70-3	Dibenz(a,h)anthracene	27	ug/Kg	J	6.3	MDL	1
460-52376-29	NVF-SBPAH53-A	8270DEL	91-58-7	2-Chloronaphthalene	56	ug/Kg	U	56	MDL	1
460-52376-29	NVF-SBPAH53-A	8270DEL	91-57-6	2-Methylnaphthalene	64	ug/Kg	U	64	MDL	1
460-52376-29	NVF-SBPAH53-A	8270DEL	86-73-7	Fluorene	64	ug/Kg	U	64	MDL	1
460-52376-29	NVF-SBPAH53-A	8270DEL	85-01-8	Phenanthrene	410	ug/Kg	J	63	MDL	1
460-52376-29	NVF-SBPAH53-A	8270DEL	83-32-9	Acenaphthene	79	ug/Kg	J	73	MDL	1
460-52376-29	NVF-SBPAH53-A	8270DEL	218-01-9	Chrysene	240	ug/Kg	J	58	MDL	1
460-52376-29	NVF-SBPAH53-A	8270DEL	91-20-3	Naphthalene	58	ug/Kg	U	58	MDL	1
460-52376-3	NVF-SBPAH32-A	Moisture	N/A	Percent Solids	76.8	%		1	MDL	1
460-52376-3	NVF-SBPAH32-A	8270DEL	205-99-2	Benzo[b]fluoranthene	540	ug/Kg		2.7	MDL	1
460-52376-3	NVF-SBPAH32-A	Moisture	N/A	Percent Moisture	23.2	%		1	MDL	1
460-52376-3	NVF-SBPAH32-A	8270DEL	56-55-3	Benzo[a]anthracene	560	ug/Kg		3	MDL	1
460-52376-3	NVF-SBPAH32-A	8270DEL	208-96-8	Acenaphthylene	51	ug/Kg	U	51	MDL	1
460-52376-3	NVF-SBPAH32-A	8270DEL	50-32-8	Benzo[a]pyrene	450	ug/Kg		3	MDL	1
460-52376-3	NVF-SBPAH32-A	8270DEL	191-24-2	Benzo[g,h,i]perylene	260	ug/Kg	J	32	MDL	1
460-52376-3	NVF-SBPAH32-A	8270DEL	207-08-9	Benzo[k]fluoranthene	230	ug/Kg		3.3	MDL	1
460-52376-3	NVF-SBPAH32-A	8270DEL	218-01-9	Chrysene	560	ug/Kg		50	MDL	1
460-52376-3	NVF-SBPAH32-A	8270DEL	53-70-3	Dibenz(a,h)anthracene	82	ug/Kg		5.4	MDL	1
460-52376-3	NVF-SBPAH32-A	8270DEL	91-20-3	Naphthalene	50	ug/Kg	U	50	MDL	1
460-52376-3	NVF-SBPAH32-A	8270DEL	86-73-7	Fluorene	69	ug/Kg	J	55	MDL	1
460-52376-3	NVF-SBPAH32-A	8270DEL	206-44-0	Fluoranthene	1100	ug/Kg		57	MDL	1
460-52376-3	NVF-SBPAH32-A	8270DEL	85-01-8	Phenanthrene	760	ug/Kg		55	MDL	1
460-52376-3	NVF-SBPAH32-A	8270DEL	129-00-0	Pyrene	990	ug/Kg		36	MDL	1
460-52376-3	NVF-SBPAH32-A	8270DEL	193-39-5	Indeno[1,2,3-cd]pyrene	260	ug/Kg		8	MDL	1
460-52376-3	NVF-SBPAH32-A	8270DEL	120-12-7	Anthracene	220	ug/Kg	J	52	MDL	1
460-52376-3	NVF-SBPAH32-A	8270DEL	83-32-9	Acenaphthene	69	ug/Kg	J	63	MDL	1
460-52376-3	NVF-SBPAH32-A	8270DEL	91-58-7	2-Chloronaphthalene	48	ug/Kg	U	48	MDL	1
460-52376-3	NVF-SBPAH32-A	8270DEL	91-57-6	2-Methylnaphthalene	55	ug/Kg	U	55	MDL	1
460-52376-30	NVF-SBPAH953-A	Moisture	N/A	Percent Solids	69.1	%		1	MDL	1
460-52376-30	NVF-SBPAH953-A	Moisture	N/A	Percent Moisture	30.9	%		1	MDL	1

460-52376-31	NVF-SBPAH54-A	Moisture	N/A	Percent Moisture	22.4	%		1	MDL	1
460-52376-31	NVF-SBPAH54-A	Moisture	N/A	Percent Solids	77.6	%		1	MDL	1
460-52376-31	NVF-SBPAH54-A	8270DEL	208-96-8	Acenaphthylene	50	ug/Kg	U	50	MDL	1
460-52376-31	NVF-SBPAH54-A	8270DEL	120-12-7	Anthracene	52	ug/Kg	U	52	MDL	1
460-52376-31	NVF-SBPAH54-A	8270DEL	56-55-3	Benzo[a]anthracene	27	ug/Kg	J	3	MDL	1
460-52376-31	NVF-SBPAH54-A	8270DEL	205-99-2	Benzo[b]fluoranthene	29	ug/Kg	J	2.7	MDL	1
460-52376-31	NVF-SBPAH54-A	8270DEL	50-32-8	Benzo[a]pyrene	19	ug/Kg	J	3	MDL	1
460-52376-31	NVF-SBPAH54-A	8270DEL	191-24-2	Benzo[g,h,i]perylene	32	ug/Kg	U	32	MDL	1
460-52376-31	NVF-SBPAH54-A	8270DEL	207-08-9	Benzo[k]fluoranthene	3.2	ug/Kg	U	3.2	MDL	1
460-52376-31	NVF-SBPAH54-A	8270DEL	218-01-9	Chrysene	50	ug/Kg	U	50	MDL	1
460-52376-31	NVF-SBPAH54-A	8270DEL	53-70-3	Dibenz(a,h)anthracene	5.4	ug/Kg	U	5.4	MDL	1
460-52376-31	NVF-SBPAH54-A	8270DEL	206-44-0	Fluoranthene	57	ug/Kg	U	57	MDL	1
460-52376-31	NVF-SBPAH54-A	8270DEL	91-20-3	Naphthalene	49	ug/Kg	U	49	MDL	1
460-52376-31	NVF-SBPAH54-A	8270DEL	85-01-8	Phenanthrene	54	ug/Kg	U	54	MDL	1
460-52376-31	NVF-SBPAH54-A	8270DEL	129-00-0	Pyrene	38	ug/Kg	J	36	MDL	1
460-52376-31	NVF-SBPAH54-A	8270DEL	86-73-7	Fluorene	54	ug/Kg	U	54	MDL	1
460-52376-31	NVF-SBPAH54-A	8270DEL	83-32-9	Acenaphthene	62	ug/Kg	U	62	MDL	1
460-52376-31	NVF-SBPAH54-A	8270DEL	193-39-5	Indeno[1,2,3-cd]pyrene	7.9	ug/Kg	U	7.9	MDL	1
460-52376-31	NVF-SBPAH54-A	8270DEL	91-58-7	2-Chloronaphthalene	47	ug/Kg	U	47	MDL	1
460-52376-31	NVF-SBPAH54-A	8270DEL	91-57-6	2-Methylnaphthalene	55	ug/Kg	U	55	MDL	1
460-52376-32	NVF-SBPAH55-A	Moisture	N/A	Percent Moisture	33.5	%		1	MDL	1
460-52376-32	NVF-SBPAH55-A	Moisture	N/A	Percent Solids	66.5	%		1	MDL	1
460-52376-32	NVF-SBPAH55-A	8270DEL	208-96-8	Acenaphthylene	59	ug/Kg	U	59	MDL	1
460-52376-32	NVF-SBPAH55-A	8270DEL	120-12-7	Anthracene	60	ug/Kg	U	60	MDL	1
460-52376-32	NVF-SBPAH55-A	8270DEL	56-55-3	Benzo[a]anthracene	120	ug/Kg		3.5	MDL	1
460-52376-32	NVF-SBPAH55-A	8270DEL	207-08-9	Benzo[k]fluoranthene	39	ug/Kg	J	3.8	MDL	1
460-52376-32	NVF-SBPAH55-A	8270DEL	205-99-2	Benzo[b]fluoranthene	110	ug/Kg		3.1	MDL	1
460-52376-32	NVF-SBPAH55-A	8270DEL	50-32-8	Benzo[a]pyrene	79	ug/Kg		3.5	MDL	1
460-52376-32	NVF-SBPAH55-A	8270DEL	191-24-2	Benzo[g,h,i]perylene	51	ug/Kg	J	37	MDL	1
460-52376-32	NVF-SBPAH55-A	8270DEL	218-01-9	Chrysene	120	ug/Kg	J	58	MDL	1
460-52376-32	NVF-SBPAH55-A	8270DEL	53-70-3	Dibenz(a,h)anthracene	6.3	ug/Kg	U	6.3	MDL	1
460-52376-32	NVF-SBPAH55-A	8270DEL	206-44-0	Fluoranthene	200	ug/Kg	J	66	MDL	1
460-52376-32	NVF-SBPAH55-A	8270DEL	91-20-3	Naphthalene	57	ug/Kg	U	57	MDL	1
460-52376-32	NVF-SBPAH55-A	8270DEL	85-01-8	Phenanthrene	120	ug/Kg	J	63	MDL	1

460-52376-32	NVF-SBPAH55-A	8270DEL	129-00-0	Pyrene	200	ug/Kg	J	42	MDL	1
460-52376-32	NVF-SBPAH55-A	8270DEL	83-32-9	Acenaphthene	72	ug/Kg	U	72	MDL	1
460-52376-32	NVF-SBPAH55-A	8270DEL	193-39-5	Indeno[1,2,3-cd]pyrene	63	ug/Kg		9.2	MDL	1
460-52376-32	NVF-SBPAH55-A	8270DEL	91-58-7	2-Chloronaphthalene	55	ug/Kg	U	55	MDL	1
460-52376-32	NVF-SBPAH55-A	8270DEL	91-57-6	2-Methylnaphthalene	64	ug/Kg	U	64	MDL	1
460-52376-32	NVF-SBPAH55-A	8270DEL	86-73-7	Fluorene	63	ug/Kg	U	63	MDL	1
460-52376-33	NVF-SBPAH56-A	8270DEL	193-39-5	Indeno[1,2,3-cd]pyrene	98	ug/Kg		7.8	MDL	1
460-52376-33	NVF-SBPAH56-A	Moisture	N/A	Percent Moisture	20.7	%		1	MDL	1
460-52376-33	NVF-SBPAH56-A	Moisture	N/A	Percent Solids	79.3	%		1	MDL	1
460-52376-33	NVF-SBPAH56-A	8270DEL	208-96-8	Acenaphthylene	49	ug/Kg	U	49	MDL	1
460-52376-33	NVF-SBPAH56-A	8270DEL	120-12-7	Anthracene	51	ug/Kg	U	51	MDL	1
460-52376-33	NVF-SBPAH56-A	8270DEL	56-55-3	Benzo[a]anthracene	130	ug/Kg		2.9	MDL	1
460-52376-33	NVF-SBPAH56-A	8270DEL	205-99-2	Benzo[b]fluoranthene	170	ug/Kg		2.6	MDL	1
460-52376-33	NVF-SBPAH56-A	8270DEL	50-32-8	Benzo[a]pyrene	150	ug/Kg		3	MDL	1
460-52376-33	NVF-SBPAH56-A	8270DEL	191-24-2	Benzo[g,h,i]perylene	97	ug/Kg	J	31	MDL	1
460-52376-33	NVF-SBPAH56-A	8270DEL	207-08-9	Benzo[k]fluoranthene	100	ug/Kg		3.2	MDL	1
460-52376-33	NVF-SBPAH56-A	8270DEL	91-20-3	Naphthalene	48	ug/Kg	U	48	MDL	1
460-52376-33	NVF-SBPAH56-A	8270DEL	91-58-7	2-Chloronaphthalene	47	ug/Kg	U	47	MDL	1
460-52376-33	NVF-SBPAH56-A	8270DEL	206-44-0	Fluoranthene	260	ug/Kg	J	56	MDL	1
460-52376-33	NVF-SBPAH56-A	8270DEL	85-01-8	Phenanthrene	100	ug/Kg	J	53	MDL	1
460-52376-33	NVF-SBPAH56-A	8270DEL	53-70-3	Dibenz(a,h)anthracene	28	ug/Kg	J	5.3	MDL	1
460-52376-33	NVF-SBPAH56-A	8270DEL	83-32-9	Acenaphthene	61	ug/Kg	U	61	MDL	1
460-52376-33	NVF-SBPAH56-A	8270DEL	218-01-9	Chrysene	140	ug/Kg	J	49	MDL	1
460-52376-33	NVF-SBPAH56-A	8270DEL	86-73-7	Fluorene	53	ug/Kg	U	53	MDL	1
460-52376-33	NVF-SBPAH56-A	8270DEL	91-57-6	2-Methylnaphthalene	54	ug/Kg	U	54	MDL	1
460-52376-33	NVF-SBPAH56-A	8270DEL	129-00-0	Pyrene	220	ug/Kg	J	35	MDL	1
460-52376-34	NVF-SBPAH57-A	Moisture	N/A	Percent Moisture	24.8	%		1	MDL	1
460-52376-34	NVF-SBPAH57-A	Moisture	N/A	Percent Solids	75.2	%		1	MDL	1
460-52376-34	NVF-SBPAH57-A	8270DEL	208-96-8	Acenaphthylene	52	ug/Kg	U	52	MDL	1
460-52376-34	NVF-SBPAH57-A	8270DEL	120-12-7	Anthracene	53	ug/Kg	U	53	MDL	1
460-52376-34	NVF-SBPAH57-A	8270DEL	56-55-3	Benzo[a]anthracene	3.1	ug/Kg	U	3.1	MDL	1
460-52376-34	NVF-SBPAH57-A	8270DEL	205-99-2	Benzo[b]fluoranthene	2.8	ug/Kg	U	2.8	MDL	1
460-52376-34	NVF-SBPAH57-A	8270DEL	50-32-8	Benzo[a]pyrene	3.1	ug/Kg	U	3.1	MDL	1
460-52376-34	NVF-SBPAH57-A	8270DEL	191-24-2	Benzo[g,h,i]perylene	33	ug/Kg	U	33	MDL	1

460-52376-34	NVF-SBPAH57-A	8270DEL	207-08-9	Benzo[k]fluoranthene	3.3	ug/Kg	U	3.3	MDL	1
460-52376-34	NVF-SBPAH57-A	8270DEL	218-01-9	Chrysene	51	ug/Kg	U	51	MDL	1
460-52376-34	NVF-SBPAH57-A	8270DEL	53-70-3	Dibenz(a,h)anthracene	5.5	ug/Kg	U	5.5	MDL	1
460-52376-34	NVF-SBPAH57-A	8270DEL	206-44-0	Fluoranthene	59	ug/Kg	U	59	MDL	1
460-52376-34	NVF-SBPAH57-A	8270DEL	91-20-3	Naphthalene	51	ug/Kg	U	51	MDL	1
460-52376-34	NVF-SBPAH57-A	8270DEL	85-01-8	Phenanthrene	56	ug/Kg	U	56	MDL	1
460-52376-34	NVF-SBPAH57-A	8270DEL	129-00-0	Pyrene	37	ug/Kg	U	37	MDL	1
460-52376-34	NVF-SBPAH57-A	8270DEL	86-73-7	Fluorene	56	ug/Kg	U	56	MDL	1
460-52376-34	NVF-SBPAH57-A	8270DEL	193-39-5	Indeno[1,2,3-cd]pyrene	8.2	ug/Kg	U	8.2	MDL	1
460-52376-34	NVF-SBPAH57-A	8270DEL	91-58-7	2-Chloronaphthalene	49	ug/Kg	U	49	MDL	1
460-52376-34	NVF-SBPAH57-A	8270DEL	91-57-6	2-Methylnaphthalene	57	ug/Kg	U	57	MDL	1
460-52376-34	NVF-SBPAH57-A	8270DEL	83-32-9	Acenaphthene	64	ug/Kg	U	64	MDL	1
460-52376-35	NVF-SBPAH58-A	8270DEL	83-32-9	Acenaphthene	61	ug/Kg	U	61	MDL	1
460-52376-35	NVF-SBPAH58-A	8270DEL	86-73-7	Fluorene	54	ug/Kg	U	54	MDL	1
460-52376-35	NVF-SBPAH58-A	8270DEL	129-00-0	Pyrene	350	ug/Kg	J	35	MDL	1
460-52376-35	NVF-SBPAH58-A	8270DEL	85-01-8	Phenanthrene	180	ug/Kg	J	54	MDL	1
460-52376-35	NVF-SBPAH58-A	8270DEL	91-20-3	Naphthalene	49	ug/Kg	U	49	MDL	1
460-52376-35	NVF-SBPAH58-A	8270DEL	206-44-0	Fluoranthene	290	ug/Kg	J	56	MDL	1
460-52376-35	NVF-SBPAH58-A	8270DEL	53-70-3	Dibenz(a,h)anthracene	25	ug/Kg	J	5.3	MDL	1
460-52376-35	NVF-SBPAH58-A	8270DEL	218-01-9	Chrysene	190	ug/Kg	J	49	MDL	1
460-52376-35	NVF-SBPAH58-A	8270DEL	207-08-9	Benzo[k]fluoranthene	71	ug/Kg		3.2	MDL	1
460-52376-35	NVF-SBPAH58-A	8270DEL	191-24-2	Benzo[g,h,i]perylene	110	ug/Kg	J	31	MDL	1
460-52376-35	NVF-SBPAH58-A	8270DEL	50-32-8	Benzo[a]pyrene	150	ug/Kg		3	MDL	1
460-52376-35	NVF-SBPAH58-A	8270DEL	205-99-2	Benzo[b]fluoranthene	200	ug/Kg		2.7	MDL	1
460-52376-35	NVF-SBPAH58-A	8270DEL	56-55-3	Benzo[a]anthracene	180	ug/Kg		2.9	MDL	1
460-52376-35	NVF-SBPAH58-A	8270DEL	120-12-7	Anthracene	51	ug/Kg	U	51	MDL	1
460-52376-35	NVF-SBPAH58-A	8270DEL	208-96-8	Acenaphthylene	50	ug/Kg	U	50	MDL	1
460-52376-35	NVF-SBPAH58-A	Moisture	N/A	Percent Solids	78.5	%		1	MDL	1
460-52376-35	NVF-SBPAH58-A	Moisture	N/A	Percent Moisture	21.5	%		1	MDL	1
460-52376-35	NVF-SBPAH58-A	8270DEL	193-39-5	Indeno[1,2,3-cd]pyrene	110	ug/Kg		7.8	MDL	1
460-52376-35	NVF-SBPAH58-A	8270DEL	91-58-7	2-Chloronaphthalene	47	ug/Kg	U	47	MDL	1
460-52376-35	NVF-SBPAH58-A	8270DEL	91-57-6	2-Methylnaphthalene	54	ug/Kg	U	54	MDL	1
460-52376-36	NVF-SBPAH59-A	Moisture	N/A	Percent Moisture	36.4	%		1	MDL	1
460-52376-36	NVF-SBPAH59-A	Moisture	N/A	Percent Solids	63.6	%		1	MDL	1

460-52376-36	NVF-SBPAH59-A	8270DEL	208-96-8	Acenaphthylene	61	ug/Kg	U	61	MDL	1
460-52376-36	NVF-SBPAH59-A	8270DEL	120-12-7	Anthracene	400	ug/Kg	J	63	MDL	1
460-52376-36	NVF-SBPAH59-A	8270DEL	56-55-3	Benzo[a]anthracene	1400	ug/Kg		3.6	MDL	1
460-52376-36	NVF-SBPAH59-A	8270DEL	205-99-2	Benzo[b]fluoranthene	1500	ug/Kg		3.3	MDL	1
460-52376-36	NVF-SBPAH59-A	8270DEL	50-32-8	Benzo[a]pyrene	1400	ug/Kg		3.7	MDL	1
460-52376-36	NVF-SBPAH59-A	8270DEL	191-24-2	Benzo[g,h,i]perylene	880	ug/Kg		38	MDL	1
460-52376-36	NVF-SBPAH59-A	8270DEL	207-08-9	Benzo[k]fluoranthene	700	ug/Kg		3.9	MDL	1
460-52376-36	NVF-SBPAH59-A	8270DEL	218-01-9	Chrysene	1400	ug/Kg		61	MDL	1
460-52376-36	NVF-SBPAH59-A	8270DEL	53-70-3	Dibenz(a,h)anthracene	240	ug/Kg		6.5	MDL	1
460-52376-36	NVF-SBPAH59-A	8270DEL	206-44-0	Fluoranthene	2600	ug/Kg		69	MDL	1
460-52376-36	NVF-SBPAH59-A	8270DEL	91-20-3	Naphthalene	60	ug/Kg	U	60	MDL	1
460-52376-36	NVF-SBPAH59-A	8270DEL	85-01-8	Phenanthrene	1500	ug/Kg		66	MDL	1
460-52376-36	NVF-SBPAH59-A	8270DEL	129-00-0	Pyrene	2200	ug/Kg		43	MDL	1
460-52376-36	NVF-SBPAH59-A	8270DEL	86-73-7	Fluorene	110	ug/Kg	J	66	MDL	1
460-52376-36	NVF-SBPAH59-A	8270DEL	193-39-5	Indeno[1,2,3-cd]pyrene	950	ug/Kg		9.6	MDL	1
460-52376-36	NVF-SBPAH59-A	8270DEL	91-58-7	2-Chloronaphthalene	58	ug/Kg	U	58	MDL	1
460-52376-36	NVF-SBPAH59-A	8270DEL	91-57-6	2-Methylnaphthalene	67	ug/Kg	U	67	MDL	1
460-52376-36	NVF-SBPAH59-A	8270DEL	83-32-9	Acenaphthene	170	ug/Kg	J	76	MDL	1
460-52376-37	NVF-SBPAH60-A	8270DEL	53-70-3	Dibenz(a,h)anthracene	23	ug/Kg	J	5	MDL	1
460-52376-37	NVF-SBPAH60-A	8270DEL	91-58-7	2-Chloronaphthalene	44	ug/Kg	U	44	MDL	1
460-52376-37	NVF-SBPAH60-A	8270DEL	193-39-5	Indeno[1,2,3-cd]pyrene	54	ug/Kg		7.4	MDL	1
460-52376-37	NVF-SBPAH60-A	8270DEL	83-32-9	Acenaphthene	58	ug/Kg	U	58	MDL	1
460-52376-37	NVF-SBPAH60-A	8270DEL	86-73-7	Fluorene	51	ug/Kg	U	51	MDL	1
460-52376-37	NVF-SBPAH60-A	8270DEL	129-00-0	Pyrene	120	ug/Kg	J	33	MDL	1
460-52376-37	NVF-SBPAH60-A	8270DEL	85-01-8	Phenanthrene	72	ug/Kg	J	51	MDL	1
460-52376-37	NVF-SBPAH60-A	8270DEL	91-20-3	Naphthalene	46	ug/Kg	U	46	MDL	1
460-52376-37	NVF-SBPAH60-A	8270DEL	206-44-0	Fluoranthene	110	ug/Kg	J	53	MDL	1
460-52376-37	NVF-SBPAH60-A	8270DEL	91-57-6	2-Methylnaphthalene	51	ug/Kg	U	51	MDL	1
460-52376-37	NVF-SBPAH60-A	8270DEL	218-01-9	Chrysene	93	ug/Kg	J	47	MDL	1
460-52376-37	NVF-SBPAH60-A	8270DEL	207-08-9	Benzo[k]fluoranthene	51	ug/Kg		3	MDL	1
460-52376-37	NVF-SBPAH60-A	8270DEL	191-24-2	Benzo[g,h,i]perylene	59	ug/Kg	J	30	MDL	1
460-52376-37	NVF-SBPAH60-A	8270DEL	50-32-8	Benzo[a]pyrene	86	ug/Kg		2.8	MDL	1
460-52376-37	NVF-SBPAH60-A	8270DEL	205-99-2	Benzo[b]fluoranthene	130	ug/Kg		2.5	MDL	1
460-52376-37	NVF-SBPAH60-A	8270DEL	56-55-3	Benzo[a]anthracene	82	ug/Kg		2.8	MDL	1

460-52376-37	NVF-SBPAH60-A	8270DEL	120-12-7	Anthracene	48	ug/Kg	U	48	MDL	1
460-52376-37	NVF-SBPAH60-A	8270DEL	208-96-8	Acenaphthylene	47	ug/Kg	U	47	MDL	1
460-52376-37	NVF-SBPAH60-A	Moisture	N/A	Percent Solids	82.9	%		1	MDL	1
460-52376-37	NVF-SBPAH60-A	Moisture	N/A	Percent Moisture	17.1	%		1	MDL	1
460-52376-38	NVF-SBPAH61-A	Moisture	N/A	Percent Solids	79.4	%		1	MDL	1
460-52376-38	NVF-SBPAH61-A	8270DEL	208-96-8	Acenaphthylene	49	ug/Kg	U	49	MDL	1
460-52376-38	NVF-SBPAH61-A	8270DEL	56-55-3	Benzo[a]anthracene	1500	ug/Kg		2.9	MDL	1
460-52376-38	NVF-SBPAH61-A	8270DEL	53-70-3	Dibenz(a,h)anthracene	170	ug/Kg		5.3	MDL	1
460-52376-38	NVF-SBPAH61-A	8270DEL	120-12-7	Anthracene	340	ug/Kg	J	51	MDL	1
460-52376-38	NVF-SBPAH61-A	8270DEL	207-08-9	Benzo[k]fluoranthene	650	ug/Kg		3.2	MDL	1
460-52376-38	NVF-SBPAH61-A	8270DEL	50-32-8	Benzo[a]pyrene	1200	ug/Kg		2.9	MDL	1
460-52376-38	NVF-SBPAH61-A	8270DEL	218-01-9	Chrysene	1400	ug/Kg		49	MDL	1
460-52376-38	NVF-SBPAH61-A	8270DEL	205-99-2	Benzo[b]fluoranthene	1300	ug/Kg		2.6	MDL	1
460-52376-38	NVF-SBPAH61-A	8270DEL	191-24-2	Benzo[g,h,i]perylene	700	ug/Kg		31	MDL	1
460-52376-38	NVF-SBPAH61-A	8270DEL	206-44-0	Fluoranthene	2300	ug/Kg		56	MDL	1
460-52376-38	NVF-SBPAH61-A	8270DEL	91-20-3	Naphthalene	49	ug/Kg	J	48	MDL	1
460-52376-38	NVF-SBPAH61-A	8270DEL	85-01-8	Phenanthrene	1300	ug/Kg		53	MDL	1
460-52376-38	NVF-SBPAH61-A	8270DEL	129-00-0	Pyrene	3300	ug/Kg		35	MDL	1
460-52376-38	NVF-SBPAH61-A	8270DEL	86-73-7	Fluorene	100	ug/Kg	J	53	MDL	1
460-52376-38	NVF-SBPAH61-A	8270DEL	83-32-9	Acenaphthene	170	ug/Kg	J	61	MDL	1
460-52376-38	NVF-SBPAH61-A	8270DEL	193-39-5	Indeno[1,2,3-cd]pyrene	790	ug/Kg		7.7	MDL	1
460-52376-38	NVF-SBPAH61-A	8270DEL	91-58-7	2-Chloronaphthalene	46	ug/Kg	U	46	MDL	1
460-52376-38	NVF-SBPAH61-A	8270DEL	91-57-6	2-Methylnaphthalene	54	ug/Kg	U	54	MDL	1
460-52376-38	NVF-SBPAH61-A	Moisture	N/A	Percent Moisture	20.6	%		1	MDL	1
460-52376-39	NVF-SBPAH62-A	8270DEL	207-08-9	Benzo[k]fluoranthene	210	ug/Kg		3.1	MDL	1
460-52376-39	NVF-SBPAH62-A	Moisture	N/A	Percent Moisture	17.8	%		1	MDL	1
460-52376-39	NVF-SBPAH62-A	Moisture	N/A	Percent Solids	82.2	%		1	MDL	1
460-52376-39	NVF-SBPAH62-A	8270DEL	208-96-8	Acenaphthylene	48	ug/Kg	U	48	MDL	1
460-52376-39	NVF-SBPAH62-A	8270DEL	120-12-7	Anthracene	110	ug/Kg	J	49	MDL	1
460-52376-39	NVF-SBPAH62-A	8270DEL	56-55-3	Benzo[a]anthracene	330	ug/Kg		2.8	MDL	1
460-52376-39	NVF-SBPAH62-A	8270DEL	50-32-8	Benzo[a]pyrene	370	ug/Kg		2.8	MDL	1
460-52376-39	NVF-SBPAH62-A	8270DEL	191-24-2	Benzo[g,h,i]perylene	230	ug/Kg	J	30	MDL	1
460-52376-39	NVF-SBPAH62-A	8270DEL	205-99-2	Benzo[b]fluoranthene	420	ug/Kg		2.5	MDL	1
460-52376-39	NVF-SBPAH62-A	8270DEL	218-01-9	Chrysene	380	ug/Kg	J	47	MDL	1

460-52376-39	NVF-SBPAH62-A	8270DEL	91-20-3	Naphthalene	47	ug/Kg	U	47	MDL	1
460-52376-39	NVF-SBPAH62-A	8270DEL	129-00-0	Pyrene	620	ug/Kg		34	MDL	1
460-52376-39	NVF-SBPAH62-A	8270DEL	206-44-0	Fluoranthene	730	ug/Kg		54	MDL	1
460-52376-39	NVF-SBPAH62-A	8270DEL	85-01-8	Phenanthrene	430	ug/Kg		51	MDL	1
460-52376-39	NVF-SBPAH62-A	8270DEL	53-70-3	Dibenz(a,h)anthracene	65	ug/Kg		5.1	MDL	1
460-52376-39	NVF-SBPAH62-A	8270DEL	86-73-7	Fluorene	51	ug/Kg	U	51	MDL	1
460-52376-39	NVF-SBPAH62-A	8270DEL	83-32-9	Acenaphthene	59	ug/Kg	U	59	MDL	1
460-52376-39	NVF-SBPAH62-A	8270DEL	193-39-5	Indeno[1,2,3-cd]pyrene	250	ug/Kg		7.5	MDL	1
460-52376-39	NVF-SBPAH62-A	8270DEL	91-58-7	2-Chloronaphthalene	45	ug/Kg	U	45	MDL	1
460-52376-39	NVF-SBPAH62-A	8270DEL	91-57-6	2-Methylnaphthalene	52	ug/Kg	U	52	MDL	1
460-52376-4	NVF-SBPAH33-A	Moisture	N/A	Percent Solids	81.7	%		1	MDL	1
460-52376-4	NVF-SBPAH33-A	Moisture	N/A	Percent Moisture	18.3	%		1	MDL	1
460-52376-40	NVF-SBPAH962-A	8270DEL	86-73-7	Fluorene	53	ug/Kg	U	53	MDL	1
460-52376-40	NVF-SBPAH962-A	8270DEL	83-32-9	Acenaphthene	60	ug/Kg	U	60	MDL	1
460-52376-40	NVF-SBPAH962-A	Moisture	N/A	Percent Solids	80.6	%		1	MDL	1
460-52376-40	NVF-SBPAH962-A	8270DEL	191-24-2	Benzo[g,h,i]perylene	160	ug/Kg	J	30	MDL	1
460-52376-40	NVF-SBPAH962-A	Moisture	N/A	Percent Moisture	19.4	%		1	MDL	1
460-52376-40	NVF-SBPAH962-A	8270DEL	120-12-7	Anthracene	54	ug/Kg	J	50	MDL	1
460-52376-40	NVF-SBPAH962-A	8270DEL	56-55-3	Benzo[a]anthracene	250	ug/Kg		2.9	MDL	1
460-52376-40	NVF-SBPAH962-A	8270DEL	50-32-8	Benzo[a]pyrene	270	ug/Kg		2.9	MDL	1
460-52376-40	NVF-SBPAH962-A	8270DEL	208-96-8	Acenaphthylene	49	ug/Kg	U	49	MDL	1
460-52376-40	NVF-SBPAH962-A	8270DEL	205-99-2	Benzo[b]fluoranthene	320	ug/Kg		2.6	MDL	1
460-52376-40	NVF-SBPAH962-A	8270DEL	218-01-9	Chrysene	270	ug/Kg	J	48	MDL	1
460-52376-40	NVF-SBPAH962-A	8270DEL	53-70-3	Dibenz(a,h)anthracene	47	ug/Kg		5.2	MDL	1
460-52376-40	NVF-SBPAH962-A	8270DEL	207-08-9	Benzo[k]fluoranthene	140	ug/Kg		3.1	MDL	1
460-52376-40	NVF-SBPAH962-A	8270DEL	91-20-3	Naphthalene	48	ug/Kg	U	48	MDL	1
460-52376-40	NVF-SBPAH962-A	8270DEL	206-44-0	Fluoranthene	490	ug/Kg		55	MDL	1
460-52376-40	NVF-SBPAH962-A	8270DEL	85-01-8	Phenanthrene	240	ug/Kg	J	52	MDL	1
460-52376-40	NVF-SBPAH962-A	8270DEL	193-39-5	Indeno[1,2,3-cd]pyrene	160	ug/Kg		7.6	MDL	1
460-52376-40	NVF-SBPAH962-A	8270DEL	91-58-7	2-Chloronaphthalene	46	ug/Kg	U	46	MDL	1
460-52376-40	NVF-SBPAH962-A	8270DEL	91-57-6	2-Methylnaphthalene	53	ug/Kg	U	53	MDL	1
460-52376-40	NVF-SBPAH962-A	8270DEL	129-00-0	Pyrene	430	ug/Kg		34	MDL	1
460-52376-41	NVF-SBPAH63-A	8270DEL	91-58-7	2-Chloronaphthalene	46	ug/Kg	U	46	MDL	1
460-52376-41	NVF-SBPAH63-A	8270DEL	129-00-0	Pyrene	2200	ug/Kg		34	MDL	1

460-52376-41	NVF-SBPAH63-A	8270DEL	91-57-6	2-Methylnaphthalene	120	ug/Kg	J	53	MDL	1
460-52376-41	NVF-SBPAH63-A	8270DEL	86-73-7	Fluorene	60	ug/Kg	J	53	MDL	1
460-52376-41	NVF-SBPAH63-A	8270DEL	193-39-5	Indeno[1,2,3-cd]pyrene	780	ug/Kg		7.6	MDL	1
460-52376-41	NVF-SBPAH63-A	8270DEL	85-01-8	Phenanthrene	850	ug/Kg		52	MDL	1
460-52376-41	NVF-SBPAH63-A	8270DEL	91-20-3	Naphthalene	85	ug/Kg	J	48	MDL	1
460-52376-41	NVF-SBPAH63-A	8270DEL	206-44-0	Fluoranthene	1600	ug/Kg		55	MDL	1
460-52376-41	NVF-SBPAH63-A	8270DEL	53-70-3	Dibenz(a,h)anthracene	200	ug/Kg		5.2	MDL	1
460-52376-41	NVF-SBPAH63-A	8270DEL	218-01-9	Chrysene	1100	ug/Kg		48	MDL	1
460-52376-41	NVF-SBPAH63-A	8270DEL	205-99-2	Benzo[b]fluoranthene	1600	ug/Kg		2.6	MDL	1
460-52376-41	NVF-SBPAH63-A	Moisture	N/A	Percent Moisture	19.7	%		1	MDL	1
460-52376-41	NVF-SBPAH63-A	8270DEL	50-32-8	Benzo[a]pyrene	1200	ug/Kg		2.9	MDL	1
460-52376-41	NVF-SBPAH63-A	8270DEL	56-55-3	Benzo[a]anthracene	1100	ug/Kg		2.9	MDL	1
460-52376-41	NVF-SBPAH63-A	8270DEL	191-24-2	Benzo[g,h,i]perylene	670	ug/Kg		30	MDL	1
460-52376-41	NVF-SBPAH63-A	8270DEL	207-08-9	Benzo[k]fluoranthene	510	ug/Kg		3.1	MDL	1
460-52376-41	NVF-SBPAH63-A	8270DEL	83-32-9	Acenaphthene	96	ug/Kg	J	60	MDL	1
460-52376-41	NVF-SBPAH63-A	Moisture	N/A	Percent Solids	80.3	%		1	MDL	1
460-52376-41	NVF-SBPAH63-A	8270DEL	120-12-7	Anthracene	180	ug/Kg	J	50	MDL	1
460-52376-41	NVF-SBPAH63-A	8270DEL	208-96-8	Acenaphthylene	49	ug/Kg	U	49	MDL	1
460-52376-42	NVF-SBPAH64-A	8270DEL	83-32-9	Acenaphthene	180	ug/Kg	J	62	MDL	1
460-52376-42	NVF-SBPAH64-A	Moisture	N/A	Percent Moisture	22.2	%		1	MDL	1
460-52376-42	NVF-SBPAH64-A	8270DEL	208-96-8	Acenaphthylene	50	ug/Kg	U	50	MDL	1
460-52376-42	NVF-SBPAH64-A	8270DEL	193-39-5	Indeno[1,2,3-cd]pyrene	1100	ug/Kg		7.9	MDL	1
460-52376-42	NVF-SBPAH64-A	Moisture	N/A	Percent Solids	77.8	%		1	MDL	1
460-52376-42	NVF-SBPAH64-A	8270DEL	56-55-3	Benzo[a]anthracene	1400	ug/Kg		3	MDL	1
460-52376-42	NVF-SBPAH64-A	8270DEL	205-99-2	Benzo[b]fluoranthene	1900	ug/Kg		2.7	MDL	1
460-52376-42	NVF-SBPAH64-A	8270DEL	191-24-2	Benzo[g,h,i]perylene	1000	ug/Kg		31	MDL	1
460-52376-42	NVF-SBPAH64-A	8270DEL	120-12-7	Anthracene	340	ug/Kg	J	52	MDL	1
460-52376-42	NVF-SBPAH64-A	8270DEL	50-32-8	Benzo[a]pyrene	1400	ug/Kg		3	MDL	1
460-52376-42	NVF-SBPAH64-A	8270DEL	206-44-0	Fluoranthene	2300	ug/Kg		57	MDL	1
460-52376-42	NVF-SBPAH64-A	8270DEL	207-08-9	Benzo[k]fluoranthene	670	ug/Kg		3.2	MDL	1
460-52376-42	NVF-SBPAH64-A	8270DEL	53-70-3	Dibenz(a,h)anthracene	270	ug/Kg		5.4	MDL	1
460-52376-42	NVF-SBPAH64-A	8270DEL	91-57-6	2-Methylnaphthalene	84	ug/Kg	J	55	MDL	1
460-52376-42	NVF-SBPAH64-A	8270DEL	91-58-7	2-Chloronaphthalene	47	ug/Kg	U	47	MDL	1
460-52376-42	NVF-SBPAH64-A	8270DEL	86-73-7	Fluorene	140	ug/Kg	J	54	MDL	1

460-52376-42	NVF-SBPAH64-A	8270DEL	85-01-8	Phenanthrene	1700	ug/Kg		54	MDL	1
460-52376-42	NVF-SBPAH64-A	8270DEL	129-00-0	Pyrene	3400	ug/Kg		36	MDL	1
460-52376-42	NVF-SBPAH64-A	8270DEL	218-01-9	Chrysene	1400	ug/Kg		50	MDL	1
460-52376-42	NVF-SBPAH64-A	8270DEL	91-20-3	Naphthalene	58	ug/Kg	J	49	MDL	1
460-52376-43	NVF-SBPAH65-A	8270DEL	91-57-6	2-Methylnaphthalene	55	ug/Kg	U	55	MDL	1
460-52376-43	NVF-SBPAH65-A	8270DEL	91-58-7	2-Chloronaphthalene	48	ug/Kg	U	48	MDL	1
460-52376-43	NVF-SBPAH65-A	8270DEL	193-39-5	Indeno[1,2,3-cd]pyrene	110	ug/Kg		8	MDL	1
460-52376-43	NVF-SBPAH65-A	8270DEL	83-32-9	Acenaphthene	62	ug/Kg	U	62	MDL	1
460-52376-43	NVF-SBPAH65-A	8270DEL	86-73-7	Fluorene	55	ug/Kg	U	55	MDL	1
460-52376-43	NVF-SBPAH65-A	8270DEL	129-00-0	Pyrene	270	ug/Kg	J	36	MDL	1
460-52376-43	NVF-SBPAH65-A	8270DEL	85-01-8	Phenanthrene	150	ug/Kg	J	55	MDL	1
460-52376-43	NVF-SBPAH65-A	8270DEL	91-20-3	Naphthalene	50	ug/Kg	U	50	MDL	1
460-52376-43	NVF-SBPAH65-A	8270DEL	206-44-0	Fluoranthene	300	ug/Kg	J	57	MDL	1
460-52376-43	NVF-SBPAH65-A	8270DEL	53-70-3	Dibenz(a,h)anthracene	30	ug/Kg	J	5.4	MDL	1
460-52376-43	NVF-SBPAH65-A	8270DEL	191-24-2	Benzo[g,h,i]perylene	110	ug/Kg	J	32	MDL	1
460-52376-43	NVF-SBPAH65-A	8270DEL	56-55-3	Benzo[a]anthracene	160	ug/Kg		3	MDL	1
460-52376-43	NVF-SBPAH65-A	8270DEL	207-08-9	Benzo[k]fluoranthene	88	ug/Kg		3.3	MDL	1
460-52376-43	NVF-SBPAH65-A	8270DEL	50-32-8	Benzo[a]pyrene	160	ug/Kg		3	MDL	1
460-52376-43	NVF-SBPAH65-A	8270DEL	205-99-2	Benzo[b]fluoranthene	210	ug/Kg		2.7	MDL	1
460-52376-43	NVF-SBPAH65-A	8270DEL	208-96-8	Acenaphthylene	51	ug/Kg	U	51	MDL	1
460-52376-43	NVF-SBPAH65-A	8270DEL	218-01-9	Chrysene	190	ug/Kg	J	50	MDL	1
460-52376-43	NVF-SBPAH65-A	8270DEL	120-12-7	Anthracene	52	ug/Kg	U	52	MDL	1
460-52376-43	NVF-SBPAH65-A	Moisture	N/A	Percent Solids	77.1	%		1	MDL	1
460-52376-43	NVF-SBPAH65-A	Moisture	N/A	Percent Moisture	22.9	%		1	MDL	1
460-52376-44	NVF-SBPAH66-A	Moisture	N/A	Percent Moisture	17.2	%		1	MDL	1
460-52376-44	NVF-SBPAH66-A	Moisture	N/A	Percent Solids	82.8	%		1	MDL	1
460-52376-44	NVF-SBPAH66-A	8270DEL	208-96-8	Acenaphthylene	47	ug/Kg	U	47	MDL	1
460-52376-44	NVF-SBPAH66-A	8270DEL	120-12-7	Anthracene	48	ug/Kg	U	48	MDL	1
460-52376-44	NVF-SBPAH66-A	8270DEL	56-55-3	Benzo[a]anthracene	120	ug/Kg		2.8	MDL	1
460-52376-44	NVF-SBPAH66-A	8270DEL	205-99-2	Benzo[b]fluoranthene	220	ug/Kg		2.5	MDL	1
460-52376-44	NVF-SBPAH66-A	8270DEL	50-32-8	Benzo[a]pyrene	140	ug/Kg		2.8	MDL	1
460-52376-44	NVF-SBPAH66-A	8270DEL	191-24-2	Benzo[g,h,i]perylene	86	ug/Kg	J	30	MDL	1
460-52376-44	NVF-SBPAH66-A	8270DEL	207-08-9	Benzo[k]fluoranthene	75	ug/Kg		3	MDL	1
460-52376-44	NVF-SBPAH66-A	8270DEL	218-01-9	Chrysene	130	ug/Kg	J	47	MDL	1

460-52376-44	NVF-SBPAH66-A	8270DEL	53-70-3	Dibenz(a,h)anthracene	24	ug/Kg	J	5	MDL	1
460-52376-44	NVF-SBPAH66-A	8270DEL	206-44-0	Fluoranthene	100	ug/Kg	J	53	MDL	1
460-52376-44	NVF-SBPAH66-A	8270DEL	91-20-3	Naphthalene	46	ug/Kg	U	46	MDL	1
460-52376-44	NVF-SBPAH66-A	8270DEL	85-01-8	Phenanthrene	51	ug/Kg	U	51	MDL	1
460-52376-44	NVF-SBPAH66-A	8270DEL	129-00-0	Pyrene	110	ug/Kg	J	33	MDL	1
460-52376-44	NVF-SBPAH66-A	8270DEL	86-73-7	Fluorene	51	ug/Kg	U	51	MDL	1
460-52376-44	NVF-SBPAH66-A	8270DEL	83-32-9	Acenaphthene	58	ug/Kg	U	58	MDL	1
460-52376-44	NVF-SBPAH66-A	8270DEL	193-39-5	Indeno[1,2,3-cd]pyrene	88	ug/Kg		7.4	MDL	1
460-52376-44	NVF-SBPAH66-A	8270DEL	91-58-7	2-Chloronaphthalene	44	ug/Kg	U	44	MDL	1
460-52376-44	NVF-SBPAH66-A	8270DEL	91-57-6	2-Methylnaphthalene	51	ug/Kg	U	51	MDL	1
460-52376-45	NVF-SBPAH67-A	Moisture	N/A	Percent Moisture	20.6	%		1	MDL	1
460-52376-45	NVF-SBPAH67-A	Moisture	N/A	Percent Solids	79.4	%		1	MDL	1
460-52376-45	NVF-SBPAH67-A	8270DEL	208-96-8	Acenaphthylene	49	ug/Kg	U	49	MDL	1
460-52376-45	NVF-SBPAH67-A	8270DEL	120-12-7	Anthracene	98	ug/Kg	J	51	MDL	1
460-52376-45	NVF-SBPAH67-A	8270DEL	56-55-3	Benzo[a]anthracene	630	ug/Kg		2.9	MDL	1
460-52376-45	NVF-SBPAH67-A	8270DEL	205-99-2	Benzo[b]fluoranthene	720	ug/Kg		2.6	MDL	1
460-52376-45	NVF-SBPAH67-A	8270DEL	50-32-8	Benzo[a]pyrene	580	ug/Kg		2.9	MDL	1
460-52376-45	NVF-SBPAH67-A	8270DEL	191-24-2	Benzo[g,h,i]perylene	490	ug/Kg		31	MDL	1
460-52376-45	NVF-SBPAH67-A	8270DEL	207-08-9	Benzo[k]fluoranthene	340	ug/Kg		3.2	MDL	1
460-52376-45	NVF-SBPAH67-A	8270DEL	218-01-9	Chrysene	520	ug/Kg		49	MDL	1
460-52376-45	NVF-SBPAH67-A	8270DEL	53-70-3	Dibenz(a,h)anthracene	100	ug/Kg		5.2	MDL	1
460-52376-45	NVF-SBPAH67-A	8270DEL	206-44-0	Fluoranthene	740	ug/Kg		56	MDL	1
460-52376-45	NVF-SBPAH67-A	8270DEL	91-20-3	Naphthalene	48	ug/Kg	U	48	MDL	1
460-52376-45	NVF-SBPAH67-A	8270DEL	85-01-8	Phenanthrene	360	ug/Kg	J	53	MDL	1
460-52376-45	NVF-SBPAH67-A	8270DEL	129-00-0	Pyrene	1100	ug/Kg		35	MDL	1
460-52376-45	NVF-SBPAH67-A	8270DEL	86-73-7	Fluorene	53	ug/Kg	U	53	MDL	1
460-52376-45	NVF-SBPAH67-A	8270DEL	83-32-9	Acenaphthene	61	ug/Kg	U	61	MDL	1
460-52376-45	NVF-SBPAH67-A	8270DEL	193-39-5	Indeno[1,2,3-cd]pyrene	480	ug/Kg		7.7	MDL	1
460-52376-45	NVF-SBPAH67-A	8270DEL	91-58-7	2-Chloronaphthalene	46	ug/Kg	U	46	MDL	1
460-52376-45	NVF-SBPAH67-A	8270DEL	91-57-6	2-Methylnaphthalene	54	ug/Kg	U	54	MDL	1
460-52376-46	NVF-SBPAH68-A	Moisture	N/A	Percent Solids	83.6	%		1	MDL	1
460-52376-46	NVF-SBPAH68-A	8270DEL	56-55-3	Benzo[a]anthracene	31	ug/Kg	J	2.8	MDL	1
460-52376-46	NVF-SBPAH68-A	Moisture	N/A	Percent Moisture	16.4	%		1	MDL	1
460-52376-46	NVF-SBPAH68-A	8270DEL	208-96-8	Acenaphthylene	47	ug/Kg	U	47	MDL	1

460-52376-46	NVF-SBPAH68-A	8270DEL	120-12-7	Anthracene	48	ug/Kg	U	48	MDL	1
460-52376-46	NVF-SBPAH68-A	8270DEL	50-32-8	Benzo[a]pyrene	19	ug/Kg	J	2.8	MDL	1
460-52376-46	NVF-SBPAH68-A	8270DEL	91-57-6	2-Methylnaphthalene	51	ug/Kg	U	51	MDL	1
460-52376-46	NVF-SBPAH68-A	8270DEL	205-99-2	Benzo[b]fluoranthene	25	ug/Kg	J	2.5	MDL	1
460-52376-46	NVF-SBPAH68-A	8270DEL	191-24-2	Benzo[g,h,i]perylene	29	ug/Kg	U	29	MDL	1
460-52376-46	NVF-SBPAH68-A	8270DEL	207-08-9	Benzo[k]fluoranthene	12	ug/Kg	J	3	MDL	1
460-52376-46	NVF-SBPAH68-A	8270DEL	206-44-0	Fluoranthene	53	ug/Kg	U	53	MDL	1
460-52376-46	NVF-SBPAH68-A	8270DEL	129-00-0	Pyrene	53	ug/Kg	J	33	MDL	1
460-52376-46	NVF-SBPAH68-A	8270DEL	53-70-3	Dibenz(a,h)anthracene	5	ug/Kg	U	5	MDL	1
460-52376-46	NVF-SBPAH68-A	8270DEL	91-20-3	Naphthalene	46	ug/Kg	U	46	MDL	1
460-52376-46	NVF-SBPAH68-A	8270DEL	85-01-8	Phenanthrene	50	ug/Kg	U	50	MDL	1
460-52376-46	NVF-SBPAH68-A	8270DEL	83-32-9	Acenaphthene	58	ug/Kg	U	58	MDL	1
460-52376-46	NVF-SBPAH68-A	8270DEL	218-01-9	Chrysene	46	ug/Kg	U	46	MDL	1
460-52376-46	NVF-SBPAH68-A	8270DEL	86-73-7	Fluorene	51	ug/Kg	U	51	MDL	1
460-52376-46	NVF-SBPAH68-A	8270DEL	193-39-5	Indeno[1,2,3-cd]pyrene	7.4	ug/Kg	U	7.4	MDL	1
460-52376-46	NVF-SBPAH68-A	8270DEL	91-58-7	2-Chloronaphthalene	44	ug/Kg	U	44	MDL	1
460-52376-5	NVF-SBPAH34-A	Moisture	N/A	Percent Moisture	25	%		1	MDL	1
460-52376-5	NVF-SBPAH34-A	Moisture	N/A	Percent Solids	75	%		1	MDL	1
460-52376-5	NVF-SBPAH34-A	8270DEL	208-96-8	Acenaphthylene	260	ug/Kg	U	260	MDL	5
460-52376-5	NVF-SBPAH34-A	8270DEL	120-12-7	Anthracene	12000	ug/Kg		270	MDL	5
460-52376-5	NVF-SBPAH34-A	8270DEL	56-55-3	Benzo[a]anthracene	18000	ug/Kg		15	MDL	5
460-52376-5	NVF-SBPAH34-A	8270DEL	205-99-2	Benzo[b]fluoranthene	16000	ug/Kg		14	MDL	5
460-52376-5	NVF-SBPAH34-A	8270DEL	50-32-8	Benzo[a]pyrene	14000	ug/Kg		16	MDL	5
460-52376-5	NVF-SBPAH34-A	8270DEL	191-24-2	Benzo[g,h,i]perylene	7000	ug/Kg		160	MDL	5
460-52376-5	NVF-SBPAH34-A	8270DEL	207-08-9	Benzo[k]fluoranthene	6800	ug/Kg		17	MDL	5
460-52376-5	NVF-SBPAH34-A	8270DEL	218-01-9	Chrysene	17000	ug/Kg		260	MDL	5
460-52376-5	NVF-SBPAH34-A	8270DEL	53-70-3	Dibenz(a,h)anthracene	2300	ug/Kg		28	MDL	5
460-52376-5	NVF-SBPAH34-A	8270DEL	206-44-0	Fluoranthene	34000	ug/Kg		290	MDL	5
460-52376-5	NVF-SBPAH34-A	8270DEL	91-20-3	Naphthalene	360	ug/Kg	J	260	MDL	5
460-52376-5	NVF-SBPAH34-A	8270DEL	85-01-8	Phenanthrene	36000	ug/Kg		280	MDL	5
460-52376-5	NVF-SBPAH34-A	8270DEL	129-00-0	Pyrene	32000	ug/Kg		180	MDL	5
460-52376-5	NVF-SBPAH34-A	8270DEL	86-73-7	Fluorene	5100	ug/Kg		280	MDL	5
460-52376-5	NVF-SBPAH34-A	8270DEL	83-32-9	Acenaphthene	3300	ug/Kg		320	MDL	5
460-52376-5	NVF-SBPAH34-A	8270DEL	193-39-5	Indeno[1,2,3-cd]pyrene	7600	ug/Kg		41	MDL	5

460-52376-5	NVF-SBPAH34-A	8270DEL	91-58-7	2-Chloronaphthalene	250	ug/Kg	U	250	MDL	5
460-52376-5	NVF-SBPAH34-A	8270DEL	91-57-6	2-Methylnaphthalene	540	ug/Kg	J	280	MDL	5
460-52376-6	NVF-SBPAH35-A	Moisture	N/A	Percent Moisture	19.6	%		1	MDL	1
460-52376-6	NVF-SBPAH35-A	Moisture	N/A	Percent Solids	80.4	%		1	MDL	1
460-52376-6	NVF-SBPAH35-A	8270DEL	208-96-8	Acenaphthylene	49	ug/Kg	U	49	MDL	1
460-52376-6	NVF-SBPAH35-A	8270DEL	120-12-7	Anthracene	150	ug/Kg	J	50	MDL	1
460-52376-6	NVF-SBPAH35-A	8270DEL	56-55-3	Benzo[a]anthracene	520	ug/Kg		2.9	MDL	1
460-52376-6	NVF-SBPAH35-A	8270DEL	205-99-2	Benzo[b]fluoranthene	530	ug/Kg		2.6	MDL	1
460-52376-6	NVF-SBPAH35-A	8270DEL	50-32-8	Benzo[a]pyrene	430	ug/Kg		2.9	MDL	1
460-52376-6	NVF-SBPAH35-A	8270DEL	191-24-2	Benzo[g,h,i]perylene	270	ug/Kg	J	30	MDL	1
460-52376-6	NVF-SBPAH35-A	8270DEL	207-08-9	Benzo[k]fluoranthene	260	ug/Kg		3.1	MDL	1
460-52376-6	NVF-SBPAH35-A	8270DEL	218-01-9	Chrysene	570	ug/Kg		48	MDL	1
460-52376-6	NVF-SBPAH35-A	8270DEL	53-70-3	Dibenz(a,h)anthracene	83	ug/Kg		5.2	MDL	1
460-52376-6	NVF-SBPAH35-A	8270DEL	206-44-0	Fluoranthene	1000	ug/Kg		55	MDL	1
460-52376-6	NVF-SBPAH35-A	8270DEL	91-20-3	Naphthalene	48	ug/Kg	U	48	MDL	1
460-52376-6	NVF-SBPAH35-A	8270DEL	85-01-8	Phenanthrene	640	ug/Kg		52	MDL	1
460-52376-6	NVF-SBPAH35-A	8270DEL	129-00-0	Pyrene	850	ug/Kg		34	MDL	1
460-52376-6	NVF-SBPAH35-A	8270DEL	86-73-7	Fluorene	53	ug/Kg	U	53	MDL	1
460-52376-6	NVF-SBPAH35-A	8270DEL	83-32-9	Acenaphthene	60	ug/Kg	U	60	MDL	1
460-52376-6	NVF-SBPAH35-A	8270DEL	193-39-5	Indeno[1,2,3-cd]pyrene	280	ug/Kg		7.6	MDL	1
460-52376-6	NVF-SBPAH35-A	8270DEL	91-58-7	2-Chloronaphthalene	46	ug/Kg	U	46	MDL	1
460-52376-6	NVF-SBPAH35-A	8270DEL	91-57-6	2-Methylnaphthalene	53	ug/Kg	U	53	MDL	1
460-52376-7	NVF-SBPAH36-A	Moisture	N/A	Percent Moisture	19.8	%		1	MDL	1
460-52376-7	NVF-SBPAH36-A	Moisture	N/A	Percent Solids	80.2	%		1	MDL	1
460-52376-7	NVF-SBPAH36-A	8270DEL	208-96-8	Acenaphthylene	49	ug/Kg	U	49	MDL	1
460-52376-7	NVF-SBPAH36-A	8270DEL	120-12-7	Anthracene	50	ug/Kg	U	50	MDL	1
460-52376-7	NVF-SBPAH36-A	8270DEL	56-55-3	Benzo[a]anthracene	40	ug/Kg	J	2.9	MDL	1
460-52376-7	NVF-SBPAH36-A	8270DEL	205-99-2	Benzo[b]fluoranthene	32	ug/Kg	J	2.6	MDL	1
460-52376-7	NVF-SBPAH36-A	8270DEL	50-32-8	Benzo[a]pyrene	20	ug/Kg	J	2.9	MDL	1
460-52376-7	NVF-SBPAH36-A	8270DEL	191-24-2	Benzo[g,h,i]perylene	31	ug/Kg	U	31	MDL	1
460-52376-7	NVF-SBPAH36-A	8270DEL	207-08-9	Benzo[k]fluoranthene	3.1	ug/Kg	U	3.1	MDL	1
460-52376-7	NVF-SBPAH36-A	8270DEL	218-01-9	Chrysene	48	ug/Kg	U	48	MDL	1
460-52376-7	NVF-SBPAH36-A	8270DEL	53-70-3	Dibenz(a,h)anthracene	5.2	ug/Kg	U	5.2	MDL	1
460-52376-7	NVF-SBPAH36-A	8270DEL	206-44-0	Fluoranthene	55	ug/Kg	U	55	MDL	1

460-52376-7	NVF-SBPAH36-A	8270DEL	91-20-3	Naphthalene	250	ug/Kg	J	48	MDL	1
460-52376-7	NVF-SBPAH36-A	8270DEL	85-01-8	Phenanthrene	94	ug/Kg	J	53	MDL	1
460-52376-7	NVF-SBPAH36-A	8270DEL	129-00-0	Pyrene	44	ug/Kg	J	35	MDL	1
460-52376-7	NVF-SBPAH36-A	8270DEL	86-73-7	Fluorene	53	ug/Kg	U	53	MDL	1
460-52376-7	NVF-SBPAH36-A	8270DEL	83-32-9	Acenaphthene	60	ug/Kg	U	60	MDL	1
460-52376-7	NVF-SBPAH36-A	8270DEL	193-39-5	Indeno[1,2,3-cd]pyrene	7.7	ug/Kg	U	7.7	MDL	1
460-52376-7	NVF-SBPAH36-A	8270DEL	91-58-7	2-Chloronaphthalene	46	ug/Kg	U	46	MDL	1
460-52376-7	NVF-SBPAH36-A	8270DEL	91-57-6	2-Methylnaphthalene	290	ug/Kg	J	53	MDL	1
460-52376-8	NVF-SBPAH936-A	Moisture	N/A	Percent Moisture	20	%		1	MDL	1
460-52376-8	NVF-SBPAH936-A	Moisture	N/A	Percent Solids	80	%		1	MDL	1
460-52376-9	NVF-SBPAH37-A	Moisture	N/A	Percent Moisture	25.2	%		1	MDL	1
460-52376-9	NVF-SBPAH37-A	Moisture	N/A	Percent Solids	74.8	%		1	MDL	1
460-52376-9	NVF-SBPAH37-A	8270DEL	208-96-8	Acenaphthylene	52	ug/Kg	U	52	MDL	1
460-52376-9	NVF-SBPAH37-A	8270DEL	120-12-7	Anthracene	54	ug/Kg	U	54	MDL	1
460-52376-9	NVF-SBPAH37-A	8270DEL	56-55-3	Benzo[a]anthracene	75	ug/Kg		3.1	MDL	1
460-52376-9	NVF-SBPAH37-A	8270DEL	205-99-2	Benzo[b]fluoranthene	81	ug/Kg		2.8	MDL	1
460-52376-9	NVF-SBPAH37-A	8270DEL	50-32-8	Benzo[a]pyrene	64	ug/Kg		3.1	MDL	1
460-52376-9	NVF-SBPAH37-A	8270DEL	191-24-2	Benzo[g,h,i]perylene	36	ug/Kg	J	33	MDL	1
460-52376-9	NVF-SBPAH37-A	8270DEL	207-08-9	Benzo[k]fluoranthene	42	ug/Kg	J	3.4	MDL	1
460-52376-9	NVF-SBPAH37-A	8270DEL	218-01-9	Chrysene	84	ug/Kg	J	52	MDL	1
460-52376-9	NVF-SBPAH37-A	8270DEL	53-70-3	Dibenz(a,h)anthracene	5.6	ug/Kg	U	5.6	MDL	1
460-52376-9	NVF-SBPAH37-A	8270DEL	206-44-0	Fluoranthene	130	ug/Kg	J	59	MDL	1
460-52376-9	NVF-SBPAH37-A	8270DEL	91-20-3	Naphthalene	51	ug/Kg	U	51	MDL	1
460-52376-9	NVF-SBPAH37-A	8270DEL	85-01-8	Phenanthrene	67	ug/Kg	J	56	MDL	1
460-52376-9	NVF-SBPAH37-A	8270DEL	129-00-0	Pyrene	120	ug/Kg	J	37	MDL	1
460-52376-9	NVF-SBPAH37-A	8270DEL	86-73-7	Fluorene	57	ug/Kg	U	57	MDL	1
460-52376-9	NVF-SBPAH37-A	8270DEL	83-32-9	Acenaphthene	64	ug/Kg	U	64	MDL	1
460-52376-9	NVF-SBPAH37-A	8270DEL	193-39-5	Indeno[1,2,3-cd]pyrene	37	ug/Kg	J	8.2	MDL	1
460-52376-9	NVF-SBPAH37-A	8270DEL	91-58-7	2-Chloronaphthalene	49	ug/Kg	U	49	MDL	1
460-52376-9	NVF-SBPAH37-A	8270DEL	91-57-6	2-Methylnaphthalene	57	ug/Kg	U	57	MDL	1

Result Basis	Batch	Sampled	Prepared	Analyzed	Analysis
Total	151311	3/13/2013 11:10	NA	3/15/2013 14:15	Percent Moisture
Total	151311	3/13/2013 11:10	NA	3/15/2013 14:15	Percent Moisture
Total	152094	3/13/2013 11:10	3/18/2013 11:10	3/19/2013 17:30	Semivolatile Organics (GC/MS)
Total	152094	3/13/2013 11:10	3/18/2013 11:10	3/19/2013 17:30	Semivolatile Organics (GC/MS)
Total	152094	3/13/2013 11:10	3/18/2013 11:10	3/19/2013 17:30	Semivolatile Organics (GC/MS)
Total	152094	3/13/2013 11:10	3/18/2013 11:10	3/19/2013 17:30	Semivolatile Organics (GC/MS)
Total	152094	3/13/2013 11:10	3/18/2013 11:10	3/19/2013 17:30	Semivolatile Organics (GC/MS)
Total	152094	3/13/2013 11:10	3/18/2013 11:10	3/19/2013 17:30	Semivolatile Organics (GC/MS)
Total	152094	3/13/2013 11:10	3/18/2013 11:10	3/19/2013 17:30	Semivolatile Organics (GC/MS)
Total	152094	3/13/2013 11:10	3/18/2013 11:10	3/19/2013 17:30	Semivolatile Organics (GC/MS)
Total	152094	3/13/2013 11:10	3/18/2013 11:10	3/19/2013 17:30	Semivolatile Organics (GC/MS)
Total	152094	3/13/2013 11:10	3/18/2013 11:10	3/19/2013 17:30	Semivolatile Organics (GC/MS)
Total	152094	3/13/2013 11:10	3/18/2013 11:10	3/19/2013 17:30	Semivolatile Organics (GC/MS)
Total	152094	3/13/2013 11:10	3/18/2013 11:10	3/19/2013 17:30	Semivolatile Organics (GC/MS)
Total	152094	3/13/2013 11:10	3/18/2013 11:10	3/19/2013 17:30	Semivolatile Organics (GC/MS)
Total	152094	3/13/2013 11:10	3/18/2013 11:10	3/19/2013 17:30	Semivolatile Organics (GC/MS)
Total	152094	3/13/2013 11:10	3/18/2013 11:10	3/19/2013 17:30	Semivolatile Organics (GC/MS)
Total	152094	3/13/2013 11:10	3/18/2013 11:10	3/19/2013 17:30	Semivolatile Organics (GC/MS)
Total	152094	3/13/2013 10:44	3/18/2013 11:10	3/19/2013 20:41	Semivolatile Organics (GC/MS)
Total	152094	3/13/2013 10:44	3/18/2013 11:10	3/19/2013 20:41	Semivolatile Organics (GC/MS)
Total	152094	3/13/2013 10:44	3/18/2013 11:10	3/19/2013 20:41	Semivolatile Organics (GC/MS)
Total	152094	3/13/2013 10:44	3/18/2013 11:10	3/19/2013 20:41	Semivolatile Organics (GC/MS)
Total	152094	3/13/2013 10:44	3/18/2013 11:10	3/19/2013 20:41	Semivolatile Organics (GC/MS)
Total	152094	3/13/2013 10:44	3/18/2013 11:10	3/19/2013 20:41	Semivolatile Organics (GC/MS)
Total	152094	3/13/2013 10:44	3/18/2013 11:10	3/19/2013 20:41	Semivolatile Organics (GC/MS)
Total	152094	3/13/2013 10:44	3/18/2013 11:10	3/19/2013 20:41	Semivolatile Organics (GC/MS)
Total	152094	3/13/2013 10:44	3/18/2013 11:10	3/19/2013 20:41	Semivolatile Organics (GC/MS)
Total	152094	3/13/2013 10:44	3/18/2013 11:10	3/19/2013 20:41	Semivolatile Organics (GC/MS)
Total	152094	3/13/2013 10:44	3/18/2013 11:10	3/19/2013 20:41	Semivolatile Organics (GC/MS)
Total	152094	3/13/2013 10:44	3/18/2013 11:10	3/19/2013 20:41	Semivolatile Organics (GC/MS)
Total	152094	3/13/2013 10:44	3/18/2013 11:10	3/19/2013 20:41	Semivolatile Organics (GC/MS)

Total	152094	3/13/2013 10:44	3/18/2013 11:10	3/19/2013 20:41	Semivolatile Organics (GC/MS)
Total	152094	3/13/2013 10:44	3/18/2013 11:10	3/19/2013 20:41	Semivolatile Organics (GC/MS)
Total	152094	3/13/2013 10:44	3/18/2013 11:10	3/19/2013 20:41	Semivolatile Organics (GC/MS)
Total	152094	3/13/2013 10:44	3/18/2013 11:10	3/19/2013 20:41	Semivolatile Organics (GC/MS)
Total	152094	3/13/2013 10:44	3/18/2013 11:10	3/19/2013 20:41	Semivolatile Organics (GC/MS)
Total	152094	3/13/2013 10:44	3/18/2013 11:10	3/19/2013 20:41	Semivolatile Organics (GC/MS)
Total	151330	3/13/2013 10:44	NA	3/15/2013 15:28	Percent Moisture
Total	151330	3/13/2013 10:44	NA	3/15/2013 15:28	Percent Moisture
Total	153936	3/13/2013 10:41	3/25/2013 15:05	4/3/2013 5:05	Semivolatile Organics (GC/MS)
Total	153936	3/13/2013 10:41	3/25/2013 15:05	4/3/2013 5:05	Semivolatile Organics (GC/MS)
Total	151330	3/13/2013 10:41	NA	3/15/2013 15:28	Percent Moisture
Total	153936	3/13/2013 10:41	3/25/2013 15:05	4/3/2013 5:05	Semivolatile Organics (GC/MS)
Total	151330	3/13/2013 10:41	NA	3/15/2013 15:28	Percent Moisture
Total	153936	3/13/2013 10:41	3/25/2013 15:05	4/3/2013 5:05	Semivolatile Organics (GC/MS)
Total	153936	3/13/2013 10:41	3/25/2013 15:05	4/3/2013 5:05	Semivolatile Organics (GC/MS)
Total	153936	3/13/2013 10:41	3/25/2013 15:05	4/3/2013 5:05	Semivolatile Organics (GC/MS)
Total	153936	3/13/2013 10:41	3/25/2013 15:05	4/3/2013 5:05	Semivolatile Organics (GC/MS)
Total	153936	3/13/2013 10:41	3/25/2013 15:05	4/3/2013 5:05	Semivolatile Organics (GC/MS)
Total	153936	3/13/2013 10:41	3/25/2013 15:05	4/3/2013 5:05	Semivolatile Organics (GC/MS)
Total	153936	3/13/2013 10:41	3/25/2013 15:05	4/3/2013 5:05	Semivolatile Organics (GC/MS)
Total	153936	3/13/2013 10:41	3/25/2013 15:05	4/3/2013 5:05	Semivolatile Organics (GC/MS)
Total	153936	3/13/2013 10:41	3/25/2013 15:05	4/3/2013 5:05	Semivolatile Organics (GC/MS)
Total	153936	3/13/2013 10:41	3/25/2013 15:05	4/3/2013 5:05	Semivolatile Organics (GC/MS)
Total	153936	3/13/2013 10:41	3/25/2013 15:05	4/3/2013 5:05	Semivolatile Organics (GC/MS)
Total	153936	3/13/2013 10:41	3/25/2013 15:05	4/3/2013 5:05	Semivolatile Organics (GC/MS)
Total	153936	3/13/2013 10:41	3/25/2013 15:05	4/3/2013 5:05	Semivolatile Organics (GC/MS)
Total	153936	3/13/2013 10:41	3/25/2013 15:05	4/3/2013 5:05	Semivolatile Organics (GC/MS)
Total	153936	3/13/2013 10:34	3/25/2013 15:05	4/3/2013 5:47	Semivolatile Organics (GC/MS)
Total	151330	3/13/2013 10:34	NA	3/15/2013 15:28	Percent Moisture
Total	151330	3/13/2013 10:34	NA	3/15/2013 15:28	Percent Moisture
Total	153936	3/13/2013 10:34	3/25/2013 15:05	4/3/2013 5:47	Semivolatile Organics (GC/MS)
Total	153936	3/13/2013 10:34	3/25/2013 15:05	4/3/2013 5:47	Semivolatile Organics (GC/MS)
Total	153936	3/13/2013 10:34	3/25/2013 15:05	4/3/2013 5:47	Semivolatile Organics (GC/MS)

Total	153936	3/13/2013 10:34	3/25/2013 15:05	4/3/2013 5:47	Semivolatile Organics (GC/MS)
Total	153936	3/13/2013 10:34	3/25/2013 15:05	4/3/2013 5:47	Semivolatile Organics (GC/MS)
Total	153936	3/13/2013 10:34	3/25/2013 15:05	4/3/2013 5:47	Semivolatile Organics (GC/MS)
Total	153936	3/13/2013 10:34	3/25/2013 15:05	4/3/2013 5:47	Semivolatile Organics (GC/MS)
Total	153936	3/13/2013 10:34	3/25/2013 15:05	4/3/2013 5:47	Semivolatile Organics (GC/MS)
Total	153936	3/13/2013 10:34	3/25/2013 15:05	4/3/2013 5:47	Semivolatile Organics (GC/MS)
Total	153936	3/13/2013 10:34	3/25/2013 15:05	4/3/2013 5:47	Semivolatile Organics (GC/MS)
Total	153936	3/13/2013 10:34	3/25/2013 15:05	4/3/2013 5:47	Semivolatile Organics (GC/MS)
Total	153936	3/13/2013 10:34	3/25/2013 15:05	4/3/2013 5:47	Semivolatile Organics (GC/MS)
Total	153936	3/13/2013 10:34	3/25/2013 15:05	4/3/2013 5:47	Semivolatile Organics (GC/MS)
Total	153936	3/13/2013 10:34	3/25/2013 15:05	4/3/2013 5:47	Semivolatile Organics (GC/MS)
Total	153936	3/13/2013 10:34	3/25/2013 15:05	4/3/2013 5:47	Semivolatile Organics (GC/MS)
Total	153936	3/13/2013 10:34	3/25/2013 15:05	4/3/2013 5:47	Semivolatile Organics (GC/MS)
Total	153936	3/13/2013 10:38	3/25/2013 15:05	4/3/2013 8:17	Semivolatile Organics (GC/MS)
Total	151330	3/13/2013 10:38	NA	3/15/2013 15:28	Percent Moisture
Total	151330	3/13/2013 10:38	NA	3/15/2013 15:28	Percent Moisture
Total	153936	3/13/2013 10:38	3/25/2013 15:05	4/3/2013 8:17	Semivolatile Organics (GC/MS)
Total	153936	3/13/2013 10:38	3/25/2013 15:05	4/3/2013 8:17	Semivolatile Organics (GC/MS)
Total	153936	3/13/2013 10:38	3/25/2013 15:05	4/3/2013 8:17	Semivolatile Organics (GC/MS)
Total	153936	3/13/2013 10:38	3/25/2013 15:05	4/3/2013 8:17	Semivolatile Organics (GC/MS)
Total	153936	3/13/2013 10:38	3/25/2013 15:05	4/3/2013 8:17	Semivolatile Organics (GC/MS)
Total	153936	3/13/2013 10:38	3/25/2013 15:05	4/3/2013 8:17	Semivolatile Organics (GC/MS)
Total	153936	3/13/2013 10:38	3/25/2013 15:05	4/3/2013 8:17	Semivolatile Organics (GC/MS)
Total	153936	3/13/2013 10:38	3/25/2013 15:05	4/3/2013 8:17	Semivolatile Organics (GC/MS)
Total	153936	3/13/2013 10:38	3/25/2013 15:05	4/3/2013 8:17	Semivolatile Organics (GC/MS)
Total	153936	3/13/2013 10:38	3/25/2013 15:05	4/3/2013 8:17	Semivolatile Organics (GC/MS)
Total	153936	3/13/2013 10:38	3/25/2013 15:05	4/3/2013 8:17	Semivolatile Organics (GC/MS)
Total	153936	3/13/2013 10:38	3/25/2013 15:05	4/3/2013 8:17	Semivolatile Organics (GC/MS)
Total	153936	3/13/2013 10:38	3/25/2013 15:05	4/3/2013 8:17	Semivolatile Organics (GC/MS)
Total	153936	3/13/2013 10:38	3/25/2013 15:05	4/3/2013 8:17	Semivolatile Organics (GC/MS)
Total	153936	3/13/2013 10:38	3/25/2013 15:05	4/3/2013 8:17	Semivolatile Organics (GC/MS)
Total	153936	3/13/2013 10:38	3/25/2013 15:05	4/3/2013 8:17	Semivolatile Organics (GC/MS)
Total	153936	3/13/2013 10:38	3/25/2013 15:05	4/3/2013 8:17	Semivolatile Organics (GC/MS)

Total	153488	3/13/2013 10:21	3/25/2013 10:39	3/28/2013 8:48	Semivolatile Organics (GC/MS)
Total	153488	3/13/2013 10:21	3/25/2013 10:39	3/28/2013 8:48	Semivolatile Organics (GC/MS)
Total	153488	3/13/2013 10:21	3/25/2013 10:39	3/28/2013 8:48	Semivolatile Organics (GC/MS)
Total	153488	3/13/2013 10:21	3/25/2013 10:39	3/28/2013 8:48	Semivolatile Organics (GC/MS)
Total	153488	3/13/2013 10:21	3/25/2013 10:39	3/28/2013 8:48	Semivolatile Organics (GC/MS)
Total	153488	3/13/2013 10:21	3/25/2013 10:39	3/28/2013 8:48	Semivolatile Organics (GC/MS)
Total	153488	3/13/2013 10:21	3/25/2013 10:39	3/28/2013 8:48	Semivolatile Organics (GC/MS)
Total	153488	3/13/2013 10:21	3/25/2013 10:39	3/28/2013 8:48	Semivolatile Organics (GC/MS)
Total	153488	3/13/2013 10:21	3/25/2013 10:39	3/28/2013 8:48	Semivolatile Organics (GC/MS)
Total	153488	3/13/2013 10:21	3/25/2013 10:39	3/28/2013 8:48	Semivolatile Organics (GC/MS)
Total	153488	3/13/2013 10:21	3/25/2013 10:39	3/28/2013 8:48	Semivolatile Organics (GC/MS)
Total	153488	3/13/2013 10:21	3/25/2013 10:39	3/28/2013 8:48	Semivolatile Organics (GC/MS)
Total	153488	3/13/2013 10:21	3/25/2013 10:39	3/28/2013 8:48	Semivolatile Organics (GC/MS)
Total	153488	3/13/2013 10:21	3/25/2013 10:39	3/28/2013 8:48	Semivolatile Organics (GC/MS)
Total	153488	3/13/2013 10:21	3/25/2013 10:39	3/28/2013 8:48	Semivolatile Organics (GC/MS)
Total	153488	3/13/2013 10:21	3/25/2013 10:39	3/28/2013 8:48	Semivolatile Organics (GC/MS)
Total	151330	3/13/2013 10:21	NA	3/15/2013 15:28	Percent Moisture
Total	153488	3/13/2013 10:21	3/25/2013 10:39	3/28/2013 8:48	Semivolatile Organics (GC/MS)
Total	151330	3/13/2013 10:21	NA	3/15/2013 15:28	Percent Moisture
Total	153488	3/13/2013 10:17	3/25/2013 10:39	3/28/2013 10:34	Semivolatile Organics (GC/MS)
Total	151330	3/13/2013 10:17	NA	3/15/2013 15:28	Percent Moisture
Total	151330	3/13/2013 10:17	NA	3/15/2013 15:28	Percent Moisture
Total	153488	3/13/2013 10:17	3/25/2013 10:39	3/28/2013 10:34	Semivolatile Organics (GC/MS)
Total	153488	3/13/2013 10:17	3/25/2013 10:39	3/28/2013 10:34	Semivolatile Organics (GC/MS)
Total	153488	3/13/2013 10:17	3/25/2013 10:39	3/28/2013 10:34	Semivolatile Organics (GC/MS)
Total	153488	3/13/2013 10:17	3/25/2013 10:39	3/28/2013 10:34	Semivolatile Organics (GC/MS)
Total	153488	3/13/2013 10:17	3/25/2013 10:39	3/28/2013 10:34	Semivolatile Organics (GC/MS)
Total	153488	3/13/2013 10:17	3/25/2013 10:39	3/28/2013 10:34	Semivolatile Organics (GC/MS)
Total	153488	3/13/2013 10:17	3/25/2013 10:39	3/28/2013 10:34	Semivolatile Organics (GC/MS)
Total	153488	3/13/2013 10:17	3/25/2013 10:39	3/28/2013 10:34	Semivolatile Organics (GC/MS)
Total	153488	3/13/2013 10:17	3/25/2013 10:39	3/28/2013 10:34	Semivolatile Organics (GC/MS)
Total	153488	3/13/2013 10:17	3/25/2013 10:39	3/28/2013 10:34	Semivolatile Organics (GC/MS)
Total	153488	3/13/2013 10:17	3/25/2013 10:39	3/28/2013 10:34	Semivolatile Organics (GC/MS)

Total	153488	3/13/2013 10:17	3/25/2013 10:39	3/28/2013 10:34	Semivolatile Organics (GC/MS)
Total	153488	3/13/2013 10:17	3/25/2013 10:39	3/28/2013 10:34	Semivolatile Organics (GC/MS)
Total	153488	3/13/2013 10:17	3/25/2013 10:39	3/28/2013 10:34	Semivolatile Organics (GC/MS)
Total	153488	3/13/2013 10:17	3/25/2013 10:39	3/28/2013 10:34	Semivolatile Organics (GC/MS)
Total	153488	3/13/2013 10:17	3/25/2013 10:39	3/28/2013 10:34	Semivolatile Organics (GC/MS)
Total	153488	3/13/2013 10:17	3/25/2013 10:39	3/28/2013 10:34	Semivolatile Organics (GC/MS)
Total	151330	3/13/2013 10:07	NA	3/15/2013 15:28	Percent Moisture
Total	151330	3/13/2013 10:07	NA	3/15/2013 15:28	Percent Moisture
Total	151330	3/13/2013 10:12	NA	3/15/2013 15:28	Percent Moisture
Total	151330	3/13/2013 10:12	NA	3/15/2013 15:28	Percent Moisture
Total	151330	3/13/2013 9:50	NA	3/15/2013 15:28	Percent Moisture
Total	153407	3/13/2013 9:50	3/25/2013 10:39	3/29/2013 18:50	Semivolatile Organics (GC/MS)
Total	153407	3/13/2013 9:50	3/25/2013 10:39	3/29/2013 18:50	Semivolatile Organics (GC/MS)
Total	153407	3/13/2013 9:50	3/25/2013 10:39	3/29/2013 18:50	Semivolatile Organics (GC/MS)
Total	153407	3/13/2013 9:50	3/25/2013 10:39	3/29/2013 18:50	Semivolatile Organics (GC/MS)
Total	153407	3/13/2013 9:50	3/25/2013 10:39	3/29/2013 18:50	Semivolatile Organics (GC/MS)
Total	153407	3/13/2013 9:50	3/25/2013 10:39	3/29/2013 18:50	Semivolatile Organics (GC/MS)
Total	153407	3/13/2013 9:50	3/25/2013 10:39	3/29/2013 18:50	Semivolatile Organics (GC/MS)
Total	153407	3/13/2013 9:50	3/25/2013 10:39	3/29/2013 18:50	Semivolatile Organics (GC/MS)
Total	153407	3/13/2013 9:50	3/25/2013 10:39	3/29/2013 18:50	Semivolatile Organics (GC/MS)
Total	153407	3/13/2013 9:50	3/25/2013 10:39	3/29/2013 18:50	Semivolatile Organics (GC/MS)
Total	153407	3/13/2013 9:50	3/25/2013 10:39	3/29/2013 18:50	Semivolatile Organics (GC/MS)
Total	153407	3/13/2013 9:50	3/25/2013 10:39	3/29/2013 18:50	Semivolatile Organics (GC/MS)
Total	153407	3/13/2013 9:50	3/25/2013 10:39	3/29/2013 18:50	Semivolatile Organics (GC/MS)
Total	153407	3/13/2013 9:50	3/25/2013 10:39	3/29/2013 18:50	Semivolatile Organics (GC/MS)
Total	153407	3/13/2013 9:50	3/25/2013 10:39	3/29/2013 18:50	Semivolatile Organics (GC/MS)
Total	153407	3/13/2013 9:50	3/25/2013 10:39	3/29/2013 18:50	Semivolatile Organics (GC/MS)
Total	151330	3/13/2013 9:50	NA	3/15/2013 15:28	Percent Moisture
Total	151330	3/13/2013 9:55	NA	3/15/2013 15:28	Percent Moisture
Total	153407	3/13/2013 9:55	3/25/2013 10:39	3/29/2013 19:32	Semivolatile Organics (GC/MS)
Total	151330	3/13/2013 9:55	NA	3/15/2013 15:28	Percent Moisture
Total	153407	3/13/2013 9:55	3/25/2013 10:39	3/29/2013 19:32	Semivolatile Organics (GC/MS)

Total	153407	3/13/2013 9:55	3/25/2013 10:39	3/29/2013 19:32	Semivolatile Organics (GC/MS)
Total	153407	3/13/2013 9:55	3/25/2013 10:39	3/29/2013 19:32	Semivolatile Organics (GC/MS)
Total	153407	3/13/2013 9:55	3/25/2013 10:39	3/29/2013 19:32	Semivolatile Organics (GC/MS)
Total	153407	3/13/2013 9:55	3/25/2013 10:39	3/29/2013 19:32	Semivolatile Organics (GC/MS)
Total	153407	3/13/2013 9:55	3/25/2013 10:39	3/29/2013 19:32	Semivolatile Organics (GC/MS)
Total	153407	3/13/2013 9:55	3/25/2013 10:39	3/29/2013 19:32	Semivolatile Organics (GC/MS)
Total	153407	3/13/2013 9:55	3/25/2013 10:39	3/29/2013 19:32	Semivolatile Organics (GC/MS)
Total	153407	3/13/2013 9:55	3/25/2013 10:39	3/29/2013 19:32	Semivolatile Organics (GC/MS)
Total	153407	3/13/2013 9:55	3/25/2013 10:39	3/29/2013 19:32	Semivolatile Organics (GC/MS)
Total	153407	3/13/2013 9:55	3/25/2013 10:39	3/29/2013 19:32	Semivolatile Organics (GC/MS)
Total	153407	3/13/2013 9:55	3/25/2013 10:39	3/29/2013 19:32	Semivolatile Organics (GC/MS)
Total	153407	3/13/2013 9:55	3/25/2013 10:39	3/29/2013 19:32	Semivolatile Organics (GC/MS)
Total	153407	3/13/2013 9:55	3/25/2013 10:39	3/29/2013 19:32	Semivolatile Organics (GC/MS)
Total	153407	3/13/2013 9:55	3/25/2013 10:39	3/29/2013 19:32	Semivolatile Organics (GC/MS)
Total	153407	3/13/2013 9:55	3/25/2013 10:39	3/29/2013 19:32	Semivolatile Organics (GC/MS)
Total	151311	3/13/2013 11:08	NA	3/15/2013 14:15	Percent Moisture
Total	151311	3/13/2013 11:08	NA	3/15/2013 14:15	Percent Moisture
Total	152094	3/13/2013 10:46	3/18/2013 11:10	3/19/2013 16:26	Semivolatile Organics (GC/MS)
Total	152094	3/13/2013 10:46	3/18/2013 11:10	3/19/2013 16:26	Semivolatile Organics (GC/MS)
Total	152094	3/13/2013 10:46	3/18/2013 11:10	3/19/2013 16:26	Semivolatile Organics (GC/MS)
Total	152094	3/13/2013 10:46	3/18/2013 11:10	3/19/2013 16:26	Semivolatile Organics (GC/MS)
Total	152094	3/13/2013 10:46	3/18/2013 11:10	3/19/2013 16:26	Semivolatile Organics (GC/MS)
Total	152094	3/13/2013 10:46	3/18/2013 11:10	3/19/2013 16:26	Semivolatile Organics (GC/MS)
Total	151330	3/13/2013 10:46	NA	3/15/2013 15:28	Percent Moisture
Total	152094	3/13/2013 10:46	3/18/2013 11:10	3/19/2013 16:26	Semivolatile Organics (GC/MS)
Total	152094	3/13/2013 10:46	3/18/2013 11:10	3/19/2013 16:26	Semivolatile Organics (GC/MS)
Total	152094	3/13/2013 10:46	3/18/2013 11:10	3/19/2013 16:26	Semivolatile Organics (GC/MS)
Total	152094	3/13/2013 10:46	3/18/2013 11:10	3/19/2013 16:26	Semivolatile Organics (GC/MS)
Total	152094	3/13/2013 10:46	3/18/2013 11:10	3/19/2013 16:26	Semivolatile Organics (GC/MS)
Total	152094	3/13/2013 10:46	3/18/2013 11:10	3/19/2013 16:26	Semivolatile Organics (GC/MS)
Total	152094	3/13/2013 10:46	3/18/2013 11:10	3/19/2013 16:26	Semivolatile Organics (GC/MS)
Total	152094	3/13/2013 10:46	3/18/2013 11:10	3/19/2013 16:26	Semivolatile Organics (GC/MS)
Total	152094	3/13/2013 10:46	3/18/2013 11:10	3/19/2013 16:26	Semivolatile Organics (GC/MS)

Total	152094	3/13/2013 10:46	3/18/2013 11:10	3/19/2013 16:26	Semivolatile Organics (GC/MS)
Total	152094	3/13/2013 10:46	3/18/2013 11:10	3/19/2013 16:26	Semivolatile Organics (GC/MS)
Total	152094	3/13/2013 10:46	3/18/2013 11:10	3/19/2013 16:26	Semivolatile Organics (GC/MS)
Total	151330	3/13/2013 10:46	NA	3/15/2013 15:28	Percent Moisture
Total	151330	3/13/2013 13:02	NA	3/15/2013 15:28	Percent Moisture
Total	151330	3/13/2013 13:02	NA	3/15/2013 15:28	Percent Moisture
Total	151331	3/13/2013 14:52	NA	3/15/2013 15:46	Percent Moisture
Total	151331	3/13/2013 14:52	NA	3/15/2013 15:46	Percent Moisture
Total	153488	3/13/2013 13:15	3/25/2013 10:39	3/28/2013 7:01	Semivolatile Organics (GC/MS)
Total	153488	3/13/2013 13:15	3/25/2013 10:39	3/28/2013 7:01	Semivolatile Organics (GC/MS)
Total	153488	3/13/2013 13:15	3/25/2013 10:39	3/28/2013 7:01	Semivolatile Organics (GC/MS)
Total	153488	3/13/2013 13:15	3/25/2013 10:39	3/28/2013 7:01	Semivolatile Organics (GC/MS)
Total	153488	3/13/2013 13:15	3/25/2013 10:39	3/28/2013 7:01	Semivolatile Organics (GC/MS)
Total	153488	3/13/2013 13:15	3/25/2013 10:39	3/28/2013 7:01	Semivolatile Organics (GC/MS)
Total	151330	3/13/2013 13:15	NA	3/15/2013 15:28	Percent Moisture
Total	153488	3/13/2013 13:15	3/25/2013 10:39	3/28/2013 7:01	Semivolatile Organics (GC/MS)
Total	153488	3/13/2013 13:15	3/25/2013 10:39	3/28/2013 7:01	Semivolatile Organics (GC/MS)
Total	153488	3/13/2013 13:15	3/25/2013 10:39	3/28/2013 7:01	Semivolatile Organics (GC/MS)
Total	153488	3/13/2013 13:15	3/25/2013 10:39	3/28/2013 7:01	Semivolatile Organics (GC/MS)
Total	151330	3/13/2013 13:15	NA	3/15/2013 15:28	Percent Moisture
Total	153488	3/13/2013 13:15	3/25/2013 10:39	3/28/2013 7:01	Semivolatile Organics (GC/MS)
Total	153488	3/13/2013 13:15	3/25/2013 10:39	3/28/2013 7:01	Semivolatile Organics (GC/MS)
Total	153488	3/13/2013 13:15	3/25/2013 10:39	3/28/2013 7:01	Semivolatile Organics (GC/MS)
Total	153488	3/13/2013 13:15	3/25/2013 10:39	3/28/2013 7:01	Semivolatile Organics (GC/MS)
Total	153488	3/13/2013 13:15	3/25/2013 10:39	3/28/2013 7:01	Semivolatile Organics (GC/MS)
Total	153488	3/13/2013 13:15	3/25/2013 10:39	3/28/2013 7:01	Semivolatile Organics (GC/MS)
Total	153488	3/13/2013 13:15	3/25/2013 10:39	3/28/2013 7:01	Semivolatile Organics (GC/MS)
Total	153488	3/13/2013 13:15	3/25/2013 10:39	3/28/2013 7:01	Semivolatile Organics (GC/MS)
Total	153488	3/13/2013 13:05	3/25/2013 10:39	3/28/2013 7:44	Semivolatile Organics (GC/MS)
Total	153488	3/13/2013 13:05	3/25/2013 10:39	3/28/2013 7:44	Semivolatile Organics (GC/MS)
Total	153488	3/13/2013 13:05	3/25/2013 10:39	3/28/2013 7:44	Semivolatile Organics (GC/MS)
Total	153488	3/13/2013 13:05	3/25/2013 10:39	3/28/2013 7:44	Semivolatile Organics (GC/MS)
Total	153488	3/13/2013 13:05	3/25/2013 10:39	3/28/2013 7:44	Semivolatile Organics (GC/MS)
Total	153488	3/13/2013 13:05	3/25/2013 10:39	3/28/2013 7:44	Semivolatile Organics (GC/MS)

Total	151331	3/13/2013 13:05	NA	3/15/2013 15:46	Percent Moisture
Total	153488	3/13/2013 13:05	3/25/2013 10:39	3/28/2013 7:44	Semivolatile Organics (GC/MS)
Total	153488	3/13/2013 13:05	3/25/2013 10:39	3/28/2013 7:44	Semivolatile Organics (GC/MS)
Total	153488	3/13/2013 13:05	3/25/2013 10:39	3/28/2013 7:44	Semivolatile Organics (GC/MS)
Total	153488	3/13/2013 13:05	3/25/2013 10:39	3/28/2013 7:44	Semivolatile Organics (GC/MS)
Total	153488	3/13/2013 13:05	3/25/2013 10:39	3/28/2013 7:44	Semivolatile Organics (GC/MS)
Total	153488	3/13/2013 13:05	3/25/2013 10:39	3/28/2013 7:44	Semivolatile Organics (GC/MS)
Total	153488	3/13/2013 13:05	3/25/2013 10:39	3/28/2013 7:44	Semivolatile Organics (GC/MS)
Total	153488	3/13/2013 13:05	3/25/2013 10:39	3/28/2013 7:44	Semivolatile Organics (GC/MS)
Total	153488	3/13/2013 13:05	3/25/2013 10:39	3/28/2013 7:44	Semivolatile Organics (GC/MS)
Total	153488	3/13/2013 13:05	3/25/2013 10:39	3/28/2013 7:44	Semivolatile Organics (GC/MS)
Total	153488	3/13/2013 13:05	3/25/2013 10:39	3/28/2013 7:44	Semivolatile Organics (GC/MS)
Total	151331	3/13/2013 13:05	NA	3/15/2013 15:46	Percent Moisture
Total	153488	3/13/2013 13:00	3/25/2013 10:39	3/28/2013 10:56	Semivolatile Organics (GC/MS)
Total	153488	3/13/2013 13:00	3/25/2013 10:39	3/28/2013 10:56	Semivolatile Organics (GC/MS)
Total	153488	3/13/2013 13:00	3/25/2013 10:39	3/28/2013 10:56	Semivolatile Organics (GC/MS)
Total	153488	3/13/2013 13:00	3/25/2013 10:39	3/28/2013 10:56	Semivolatile Organics (GC/MS)
Total	153488	3/13/2013 13:00	3/25/2013 10:39	3/28/2013 10:56	Semivolatile Organics (GC/MS)
Total	153488	3/13/2013 13:00	3/25/2013 10:39	3/28/2013 10:56	Semivolatile Organics (GC/MS)
Total	151331	3/13/2013 13:00	NA	3/15/2013 15:46	Percent Moisture
Total	153488	3/13/2013 13:00	3/25/2013 10:39	3/28/2013 10:56	Semivolatile Organics (GC/MS)
Total	153488	3/13/2013 13:00	3/25/2013 10:39	3/28/2013 10:56	Semivolatile Organics (GC/MS)
Total	153488	3/13/2013 13:00	3/25/2013 10:39	3/28/2013 10:56	Semivolatile Organics (GC/MS)
Total	153488	3/13/2013 13:00	3/25/2013 10:39	3/28/2013 10:56	Semivolatile Organics (GC/MS)
Total	153488	3/13/2013 13:00	3/25/2013 10:39	3/28/2013 10:56	Semivolatile Organics (GC/MS)
Total	153488	3/13/2013 13:00	3/25/2013 10:39	3/28/2013 10:56	Semivolatile Organics (GC/MS)
Total	153488	3/13/2013 13:00	3/25/2013 10:39	3/28/2013 10:56	Semivolatile Organics (GC/MS)
Total	153488	3/13/2013 13:00	3/25/2013 10:39	3/28/2013 10:56	Semivolatile Organics (GC/MS)
Total	153488	3/13/2013 13:00	3/25/2013 10:39	3/28/2013 10:56	Semivolatile Organics (GC/MS)
Total	153488	3/13/2013 13:00	3/25/2013 10:39	3/28/2013 10:56	Semivolatile Organics (GC/MS)
Total	153488	3/13/2013 13:00	3/25/2013 10:39	3/28/2013 10:56	Semivolatile Organics (GC/MS)
Total	151331	3/13/2013 13:00	NA	3/15/2013 15:46	Percent Moisture

Total	153488	3/13/2013 13:20	3/25/2013 10:39	3/28/2013 9:30	Semivolatile Organics (GC/MS)
Total	153488	3/13/2013 13:20	3/25/2013 10:39	3/28/2013 9:30	Semivolatile Organics (GC/MS)
Total	153488	3/13/2013 13:20	3/25/2013 10:39	3/28/2013 9:30	Semivolatile Organics (GC/MS)
Total	153488	3/13/2013 13:20	3/25/2013 10:39	3/28/2013 9:30	Semivolatile Organics (GC/MS)
Total	153488	3/13/2013 13:20	3/25/2013 10:39	3/28/2013 9:30	Semivolatile Organics (GC/MS)
Total	153488	3/13/2013 13:20	3/25/2013 10:39	3/28/2013 9:30	Semivolatile Organics (GC/MS)
Total	153488	3/13/2013 13:20	3/25/2013 10:39	3/28/2013 9:30	Semivolatile Organics (GC/MS)
Total	153488	3/13/2013 13:20	3/25/2013 10:39	3/28/2013 9:30	Semivolatile Organics (GC/MS)
Total	153488	3/13/2013 13:20	3/25/2013 10:39	3/28/2013 9:30	Semivolatile Organics (GC/MS)
Total	153488	3/13/2013 13:20	3/25/2013 10:39	3/28/2013 9:30	Semivolatile Organics (GC/MS)
Total	153488	3/13/2013 13:20	3/25/2013 10:39	3/28/2013 9:30	Semivolatile Organics (GC/MS)
Total	153488	3/13/2013 13:20	3/25/2013 10:39	3/28/2013 9:30	Semivolatile Organics (GC/MS)
Total	153488	3/13/2013 13:20	3/25/2013 10:39	3/28/2013 9:30	Semivolatile Organics (GC/MS)
Total	153488	3/13/2013 13:20	3/25/2013 10:39	3/28/2013 9:30	Semivolatile Organics (GC/MS)
Total	153488	3/13/2013 13:20	3/25/2013 10:39	3/28/2013 9:30	Semivolatile Organics (GC/MS)
Total	153488	3/13/2013 13:20	3/25/2013 10:39	3/28/2013 9:30	Semivolatile Organics (GC/MS)
Total	153488	3/13/2013 13:20	3/25/2013 10:39	3/28/2013 9:30	Semivolatile Organics (GC/MS)
Total	151331	3/13/2013 13:20	NA	3/15/2013 15:46	Percent Moisture
Total	151331	3/13/2013 13:20	NA	3/15/2013 15:46	Percent Moisture
Total	151331	3/13/2013 13:25	NA	3/15/2013 15:46	Percent Moisture
Total	153488	3/13/2013 13:25	3/25/2013 10:39	3/28/2013 9:52	Semivolatile Organics (GC/MS)
Total	153488	3/13/2013 13:25	3/25/2013 10:39	3/28/2013 9:52	Semivolatile Organics (GC/MS)
Total	153488	3/13/2013 13:25	3/25/2013 10:39	3/28/2013 9:52	Semivolatile Organics (GC/MS)
Total	151331	3/13/2013 13:25	NA	3/15/2013 15:46	Percent Moisture
Total	153488	3/13/2013 13:25	3/25/2013 10:39	3/28/2013 9:52	Semivolatile Organics (GC/MS)
Total	153488	3/13/2013 13:25	3/25/2013 10:39	3/28/2013 9:52	Semivolatile Organics (GC/MS)
Total	153488	3/13/2013 13:25	3/25/2013 10:39	3/28/2013 9:52	Semivolatile Organics (GC/MS)
Total	153488	3/13/2013 13:25	3/25/2013 10:39	3/28/2013 9:52	Semivolatile Organics (GC/MS)
Total	153488	3/13/2013 13:25	3/25/2013 10:39	3/28/2013 9:52	Semivolatile Organics (GC/MS)
Total	153488	3/13/2013 13:25	3/25/2013 10:39	3/28/2013 9:52	Semivolatile Organics (GC/MS)
Total	153488	3/13/2013 13:25	3/25/2013 10:39	3/28/2013 9:52	Semivolatile Organics (GC/MS)
Total	153488	3/13/2013 13:25	3/25/2013 10:39	3/28/2013 9:52	Semivolatile Organics (GC/MS)
Total	153488	3/13/2013 13:25	3/25/2013 10:39	3/28/2013 9:52	Semivolatile Organics (GC/MS)

Total	153488	3/13/2013 13:25	3/25/2013 10:39	3/28/2013 9:52	Semivolatile Organics (GC/MS)
Total	153488	3/13/2013 13:25	3/25/2013 10:39	3/28/2013 9:52	Semivolatile Organics (GC/MS)
Total	153488	3/13/2013 13:25	3/25/2013 10:39	3/28/2013 9:52	Semivolatile Organics (GC/MS)
Total	153488	3/13/2013 13:25	3/25/2013 10:39	3/28/2013 9:52	Semivolatile Organics (GC/MS)
Total	153488	3/13/2013 13:25	3/25/2013 10:39	3/28/2013 9:52	Semivolatile Organics (GC/MS)
Total	153488	3/13/2013 13:25	3/25/2013 10:39	3/28/2013 9:52	Semivolatile Organics (GC/MS)
Total	153407	3/13/2013 13:30	3/25/2013 10:39	3/29/2013 19:11	Semivolatile Organics (GC/MS)
Total	153407	3/13/2013 13:30	3/25/2013 10:39	3/29/2013 19:11	Semivolatile Organics (GC/MS)
Total	153407	3/13/2013 13:30	3/25/2013 10:39	3/29/2013 19:11	Semivolatile Organics (GC/MS)
Total	153407	3/13/2013 13:30	3/25/2013 10:39	3/29/2013 19:11	Semivolatile Organics (GC/MS)
Total	153407	3/13/2013 13:30	3/25/2013 10:39	3/29/2013 19:11	Semivolatile Organics (GC/MS)
Total	153407	3/13/2013 13:30	3/25/2013 10:39	3/29/2013 19:11	Semivolatile Organics (GC/MS)
Total	153407	3/13/2013 13:30	3/25/2013 10:39	3/29/2013 19:11	Semivolatile Organics (GC/MS)
Total	153407	3/13/2013 13:30	3/25/2013 10:39	3/29/2013 19:11	Semivolatile Organics (GC/MS)
Total	153407	3/13/2013 13:30	3/25/2013 10:39	3/29/2013 19:11	Semivolatile Organics (GC/MS)
Total	153407	3/13/2013 13:30	3/25/2013 10:39	3/29/2013 19:11	Semivolatile Organics (GC/MS)
Total	153407	3/13/2013 13:30	3/25/2013 10:39	3/29/2013 19:11	Semivolatile Organics (GC/MS)
Total	153407	3/13/2013 13:30	3/25/2013 10:39	3/29/2013 19:11	Semivolatile Organics (GC/MS)
Total	153407	3/13/2013 13:30	3/25/2013 10:39	3/29/2013 19:11	Semivolatile Organics (GC/MS)
Total	151331	3/13/2013 13:30	NA	3/15/2013 15:46	Percent Moisture
Total	153407	3/13/2013 13:30	3/25/2013 10:39	3/29/2013 19:11	Semivolatile Organics (GC/MS)
Total	153407	3/13/2013 13:30	3/25/2013 10:39	3/29/2013 19:11	Semivolatile Organics (GC/MS)
Total	151331	3/13/2013 13:30	NA	3/15/2013 15:46	Percent Moisture
Total	153407	3/13/2013 13:30	3/25/2013 10:39	3/29/2013 19:11	Semivolatile Organics (GC/MS)
Total	153407	3/13/2013 13:50	3/25/2013 10:39	3/29/2013 18:28	Semivolatile Organics (GC/MS)
Total	151331	3/13/2013 13:50	NA	3/15/2013 15:46	Percent Moisture
Total	153407	3/13/2013 13:50	3/25/2013 10:39	3/29/2013 18:28	Semivolatile Organics (GC/MS)
Total	153407	3/13/2013 13:50	3/25/2013 10:39	3/29/2013 18:28	Semivolatile Organics (GC/MS)
Total	151331	3/13/2013 13:50	NA	3/15/2013 15:46	Percent Moisture
Total	153407	3/13/2013 13:50	3/25/2013 10:39	3/29/2013 18:28	Semivolatile Organics (GC/MS)
Total	153407	3/13/2013 13:50	3/25/2013 10:39	3/29/2013 18:28	Semivolatile Organics (GC/MS)
Total	153407	3/13/2013 13:50	3/25/2013 10:39	3/29/2013 18:28	Semivolatile Organics (GC/MS)

Total	153407	3/13/2013 13:50	3/25/2013 10:39	3/29/2013 18:28	Semivolatile Organics (GC/MS)
Total	153407	3/13/2013 13:50	3/25/2013 10:39	3/29/2013 18:28	Semivolatile Organics (GC/MS)
Total	153407	3/13/2013 13:50	3/25/2013 10:39	3/29/2013 18:28	Semivolatile Organics (GC/MS)
Total	153407	3/13/2013 13:50	3/25/2013 10:39	3/29/2013 18:28	Semivolatile Organics (GC/MS)
Total	153407	3/13/2013 13:50	3/25/2013 10:39	3/29/2013 18:28	Semivolatile Organics (GC/MS)
Total	153407	3/13/2013 13:50	3/25/2013 10:39	3/29/2013 18:28	Semivolatile Organics (GC/MS)
Total	153407	3/13/2013 13:50	3/25/2013 10:39	3/29/2013 18:28	Semivolatile Organics (GC/MS)
Total	153407	3/13/2013 13:50	3/25/2013 10:39	3/29/2013 18:28	Semivolatile Organics (GC/MS)
Total	153407	3/13/2013 13:50	3/25/2013 10:39	3/29/2013 18:28	Semivolatile Organics (GC/MS)
Total	153407	3/13/2013 13:50	3/25/2013 10:39	3/29/2013 18:28	Semivolatile Organics (GC/MS)
Total	153407	3/13/2013 13:50	3/25/2013 10:39	3/29/2013 18:28	Semivolatile Organics (GC/MS)
Total	153407	3/13/2013 13:50	3/25/2013 10:39	3/29/2013 18:28	Semivolatile Organics (GC/MS)
Total	151311	3/13/2013 11:05	NA	3/15/2013 14:15	Percent Moisture
Total	152094	3/13/2013 11:05	3/18/2013 11:10	3/19/2013 18:12	Semivolatile Organics (GC/MS)
Total	151311	3/13/2013 11:05	NA	3/15/2013 14:15	Percent Moisture
Total	152094	3/13/2013 11:05	3/18/2013 11:10	3/19/2013 18:12	Semivolatile Organics (GC/MS)
Total	152094	3/13/2013 11:05	3/18/2013 11:10	3/19/2013 18:12	Semivolatile Organics (GC/MS)
Total	152094	3/13/2013 11:05	3/18/2013 11:10	3/19/2013 18:12	Semivolatile Organics (GC/MS)
Total	152094	3/13/2013 11:05	3/18/2013 11:10	3/19/2013 18:12	Semivolatile Organics (GC/MS)
Total	152094	3/13/2013 11:05	3/18/2013 11:10	3/19/2013 18:12	Semivolatile Organics (GC/MS)
Total	152094	3/13/2013 11:05	3/18/2013 11:10	3/19/2013 18:12	Semivolatile Organics (GC/MS)
Total	152094	3/13/2013 11:05	3/18/2013 11:10	3/19/2013 18:12	Semivolatile Organics (GC/MS)
Total	152094	3/13/2013 11:05	3/18/2013 11:10	3/19/2013 18:12	Semivolatile Organics (GC/MS)
Total	152094	3/13/2013 11:05	3/18/2013 11:10	3/19/2013 18:12	Semivolatile Organics (GC/MS)
Total	152094	3/13/2013 11:05	3/18/2013 11:10	3/19/2013 18:12	Semivolatile Organics (GC/MS)
Total	152094	3/13/2013 11:05	3/18/2013 11:10	3/19/2013 18:12	Semivolatile Organics (GC/MS)
Total	152094	3/13/2013 11:05	3/18/2013 11:10	3/19/2013 18:12	Semivolatile Organics (GC/MS)
Total	152094	3/13/2013 11:05	3/18/2013 11:10	3/19/2013 18:12	Semivolatile Organics (GC/MS)
Total	152094	3/13/2013 11:05	3/18/2013 11:10	3/19/2013 18:12	Semivolatile Organics (GC/MS)
Total	152094	3/13/2013 11:05	3/18/2013 11:10	3/19/2013 18:12	Semivolatile Organics (GC/MS)
Total	151331	3/13/2013 13:55	NA	3/15/2013 15:46	Percent Moisture
Total	151331	3/13/2013 13:55	NA	3/15/2013 15:46	Percent Moisture

Total	151331	3/13/2013 14:00	NA	3/15/2013 15:46	Percent Moisture
Total	151331	3/13/2013 14:00	NA	3/15/2013 15:46	Percent Moisture
Total	153488	3/13/2013 14:00	3/25/2013 10:39	3/28/2013 7:22	Semivolatile Organics (GC/MS)
Total	153488	3/13/2013 14:00	3/25/2013 10:39	3/28/2013 7:22	Semivolatile Organics (GC/MS)
Total	153488	3/13/2013 14:00	3/25/2013 10:39	3/28/2013 7:22	Semivolatile Organics (GC/MS)
Total	153488	3/13/2013 14:00	3/25/2013 10:39	3/28/2013 7:22	Semivolatile Organics (GC/MS)
Total	153488	3/13/2013 14:00	3/25/2013 10:39	3/28/2013 7:22	Semivolatile Organics (GC/MS)
Total	153488	3/13/2013 14:00	3/25/2013 10:39	3/28/2013 7:22	Semivolatile Organics (GC/MS)
Total	153488	3/13/2013 14:00	3/25/2013 10:39	3/28/2013 7:22	Semivolatile Organics (GC/MS)
Total	153488	3/13/2013 14:00	3/25/2013 10:39	3/28/2013 7:22	Semivolatile Organics (GC/MS)
Total	153488	3/13/2013 14:00	3/25/2013 10:39	3/28/2013 7:22	Semivolatile Organics (GC/MS)
Total	153488	3/13/2013 14:00	3/25/2013 10:39	3/28/2013 7:22	Semivolatile Organics (GC/MS)
Total	153488	3/13/2013 14:00	3/25/2013 10:39	3/28/2013 7:22	Semivolatile Organics (GC/MS)
Total	153488	3/13/2013 14:00	3/25/2013 10:39	3/28/2013 7:22	Semivolatile Organics (GC/MS)
Total	153488	3/13/2013 14:00	3/25/2013 10:39	3/28/2013 7:22	Semivolatile Organics (GC/MS)
Total	153488	3/13/2013 14:00	3/25/2013 10:39	3/28/2013 7:22	Semivolatile Organics (GC/MS)
Total	153488	3/13/2013 14:00	3/25/2013 10:39	3/28/2013 7:22	Semivolatile Organics (GC/MS)
Total	153488	3/13/2013 14:00	3/25/2013 10:39	3/28/2013 7:22	Semivolatile Organics (GC/MS)
Total	151331	3/13/2013 14:10	NA	3/15/2013 15:46	Percent Moisture
Total	151331	3/13/2013 14:10	NA	3/15/2013 15:46	Percent Moisture
Total	153784	3/13/2013 14:10	3/25/2013 15:05	4/1/2013 12:29	Semivolatile Organics (GC/MS)
Total	153784	3/13/2013 14:10	3/25/2013 15:05	4/1/2013 12:29	Semivolatile Organics (GC/MS)
Total	153784	3/13/2013 14:10	3/25/2013 15:05	4/1/2013 12:29	Semivolatile Organics (GC/MS)
Total	153784	3/13/2013 14:10	3/25/2013 15:05	4/1/2013 12:29	Semivolatile Organics (GC/MS)
Total	153784	3/13/2013 14:10	3/25/2013 15:05	4/1/2013 12:29	Semivolatile Organics (GC/MS)
Total	153784	3/13/2013 14:10	3/25/2013 15:05	4/1/2013 12:29	Semivolatile Organics (GC/MS)
Total	153784	3/13/2013 14:10	3/25/2013 15:05	4/1/2013 12:29	Semivolatile Organics (GC/MS)
Total	153784	3/13/2013 14:10	3/25/2013 15:05	4/1/2013 12:29	Semivolatile Organics (GC/MS)
Total	153784	3/13/2013 14:10	3/25/2013 15:05	4/1/2013 12:29	Semivolatile Organics (GC/MS)
Total	153784	3/13/2013 14:10	3/25/2013 15:05	4/1/2013 12:29	Semivolatile Organics (GC/MS)
Total	153784	3/13/2013 14:10	3/25/2013 15:05	4/1/2013 12:29	Semivolatile Organics (GC/MS)

Total	153784	3/13/2013 14:10	3/25/2013 15:05	4/1/2013 12:29	Semivolatile Organics (GC/MS)
Total	153784	3/13/2013 14:10	3/25/2013 15:05	4/1/2013 12:29	Semivolatile Organics (GC/MS)
Total	153784	3/13/2013 14:10	3/25/2013 15:05	4/1/2013 12:29	Semivolatile Organics (GC/MS)
Total	153784	3/13/2013 14:10	3/25/2013 15:05	4/1/2013 12:29	Semivolatile Organics (GC/MS)
Total	153784	3/13/2013 14:10	3/25/2013 15:05	4/1/2013 12:29	Semivolatile Organics (GC/MS)
Total	153784	3/13/2013 14:10	3/25/2013 15:05	4/1/2013 12:29	Semivolatile Organics (GC/MS)
Total	152094	3/13/2013 14:20	3/18/2013 11:10	3/19/2013 17:51	Semivolatile Organics (GC/MS)
Total	151331	3/13/2013 14:20	NA	3/15/2013 15:46	Percent Moisture
Total	151331	3/13/2013 14:20	NA	3/15/2013 15:46	Percent Moisture
Total	152094	3/13/2013 14:20	3/18/2013 11:10	3/19/2013 17:51	Semivolatile Organics (GC/MS)
Total	152094	3/13/2013 14:20	3/18/2013 11:10	3/19/2013 17:51	Semivolatile Organics (GC/MS)
Total	152094	3/13/2013 14:20	3/18/2013 11:10	3/19/2013 17:51	Semivolatile Organics (GC/MS)
Total	152094	3/13/2013 14:20	3/18/2013 11:10	3/19/2013 17:51	Semivolatile Organics (GC/MS)
Total	152094	3/13/2013 14:20	3/18/2013 11:10	3/19/2013 17:51	Semivolatile Organics (GC/MS)
Total	152094	3/13/2013 14:20	3/18/2013 11:10	3/19/2013 17:51	Semivolatile Organics (GC/MS)
Total	152094	3/13/2013 14:20	3/18/2013 11:10	3/19/2013 17:51	Semivolatile Organics (GC/MS)
Total	152094	3/13/2013 14:20	3/18/2013 11:10	3/19/2013 17:51	Semivolatile Organics (GC/MS)
Total	152094	3/13/2013 14:20	3/18/2013 11:10	3/19/2013 17:51	Semivolatile Organics (GC/MS)
Total	152094	3/13/2013 14:20	3/18/2013 11:10	3/19/2013 17:51	Semivolatile Organics (GC/MS)
Total	152094	3/13/2013 14:20	3/18/2013 11:10	3/19/2013 17:51	Semivolatile Organics (GC/MS)
Total	152094	3/13/2013 14:20	3/18/2013 11:10	3/19/2013 17:51	Semivolatile Organics (GC/MS)
Total	152094	3/13/2013 14:20	3/18/2013 11:10	3/19/2013 17:51	Semivolatile Organics (GC/MS)
Total	152094	3/13/2013 14:20	3/18/2013 11:10	3/19/2013 17:51	Semivolatile Organics (GC/MS)
Total	152094	3/13/2013 14:20	3/18/2013 11:10	3/19/2013 17:51	Semivolatile Organics (GC/MS)
Total	151331	3/13/2013 14:23	NA	3/15/2013 15:46	Percent Moisture
Total	151331	3/13/2013 14:23	NA	3/15/2013 15:46	Percent Moisture
Total	153784	3/13/2013 14:23	3/25/2013 15:05	4/1/2013 12:07	Semivolatile Organics (GC/MS)
Total	153784	3/13/2013 14:23	3/25/2013 15:05	4/1/2013 12:07	Semivolatile Organics (GC/MS)
Total	153784	3/13/2013 14:23	3/25/2013 15:05	4/1/2013 12:07	Semivolatile Organics (GC/MS)
Total	153784	3/13/2013 14:23	3/25/2013 15:05	4/1/2013 12:07	Semivolatile Organics (GC/MS)
Total	153784	3/13/2013 14:23	3/25/2013 15:05	4/1/2013 12:07	Semivolatile Organics (GC/MS)
Total	153784	3/13/2013 14:23	3/25/2013 15:05	4/1/2013 12:07	Semivolatile Organics (GC/MS)

Total	153784	3/13/2013 14:23	3/25/2013 15:05	4/1/2013 12:07	Semivolatile Organics (GC/MS)
Total	153784	3/13/2013 14:23	3/25/2013 15:05	4/1/2013 12:07	Semivolatile Organics (GC/MS)
Total	153784	3/13/2013 14:23	3/25/2013 15:05	4/1/2013 12:07	Semivolatile Organics (GC/MS)
Total	153784	3/13/2013 14:23	3/25/2013 15:05	4/1/2013 12:07	Semivolatile Organics (GC/MS)
Total	153784	3/13/2013 14:23	3/25/2013 15:05	4/1/2013 12:07	Semivolatile Organics (GC/MS)
Total	153784	3/13/2013 14:23	3/25/2013 15:05	4/1/2013 12:07	Semivolatile Organics (GC/MS)
Total	153784	3/13/2013 14:23	3/25/2013 15:05	4/1/2013 12:07	Semivolatile Organics (GC/MS)
Total	153784	3/13/2013 14:23	3/25/2013 15:05	4/1/2013 12:07	Semivolatile Organics (GC/MS)
Total	153784	3/13/2013 14:23	3/25/2013 15:05	4/1/2013 12:07	Semivolatile Organics (GC/MS)
Total	153784	3/13/2013 14:23	3/25/2013 15:05	4/1/2013 12:07	Semivolatile Organics (GC/MS)
Total	153784	3/13/2013 14:23	3/25/2013 15:05	4/1/2013 12:07	Semivolatile Organics (GC/MS)
Total	153784	3/13/2013 14:23	3/25/2013 15:05	4/1/2013 12:07	Semivolatile Organics (GC/MS)
Total	153784	3/13/2013 14:27	3/25/2013 15:05	4/1/2013 14:57	Semivolatile Organics (GC/MS)
Total	153784	3/13/2013 14:27	3/25/2013 15:05	4/1/2013 14:57	Semivolatile Organics (GC/MS)
Total	153784	3/13/2013 14:27	3/25/2013 15:05	4/1/2013 14:57	Semivolatile Organics (GC/MS)
Total	153784	3/13/2013 14:27	3/25/2013 15:05	4/1/2013 14:57	Semivolatile Organics (GC/MS)
Total	153784	3/13/2013 14:27	3/25/2013 15:05	4/1/2013 14:57	Semivolatile Organics (GC/MS)
Total	153784	3/13/2013 14:27	3/25/2013 15:05	4/1/2013 14:57	Semivolatile Organics (GC/MS)
Total	153784	3/13/2013 14:27	3/25/2013 15:05	4/1/2013 14:57	Semivolatile Organics (GC/MS)
Total	153784	3/13/2013 14:27	3/25/2013 15:05	4/1/2013 14:57	Semivolatile Organics (GC/MS)
Total	153784	3/13/2013 14:27	3/25/2013 15:05	4/1/2013 14:57	Semivolatile Organics (GC/MS)
Total	153784	3/13/2013 14:27	3/25/2013 15:05	4/1/2013 14:57	Semivolatile Organics (GC/MS)
Total	153784	3/13/2013 14:27	3/25/2013 15:05	4/1/2013 14:57	Semivolatile Organics (GC/MS)
Total	153784	3/13/2013 14:27	3/25/2013 15:05	4/1/2013 14:57	Semivolatile Organics (GC/MS)
Total	153784	3/13/2013 14:27	3/25/2013 15:05	4/1/2013 14:57	Semivolatile Organics (GC/MS)
Total	153784	3/13/2013 14:27	3/25/2013 15:05	4/1/2013 14:57	Semivolatile Organics (GC/MS)
Total	151331	3/13/2013 14:27	NA	3/15/2013 15:46	Percent Moisture
Total	151331	3/13/2013 14:27	NA	3/15/2013 15:46	Percent Moisture
Total	153784	3/13/2013 14:27	3/25/2013 15:05	4/1/2013 14:57	Semivolatile Organics (GC/MS)
Total	153784	3/13/2013 14:27	3/25/2013 15:05	4/1/2013 14:57	Semivolatile Organics (GC/MS)
Total	153784	3/13/2013 14:27	3/25/2013 15:05	4/1/2013 14:57	Semivolatile Organics (GC/MS)
Total	151331	3/13/2013 14:30	NA	3/15/2013 15:46	Percent Moisture
Total	151331	3/13/2013 14:30	NA	3/15/2013 15:46	Percent Moisture

Total	152094	3/13/2013 14:30	3/18/2013 11:10	3/19/2013 20:19	Semivolatile Organics (GC/MS)
Total	152094	3/13/2013 14:30	3/18/2013 11:10	3/19/2013 20:19	Semivolatile Organics (GC/MS)
Total	152094	3/13/2013 14:30	3/18/2013 11:10	3/19/2013 20:19	Semivolatile Organics (GC/MS)
Total	152094	3/13/2013 14:30	3/18/2013 11:10	3/19/2013 20:19	Semivolatile Organics (GC/MS)
Total	152094	3/13/2013 14:30	3/18/2013 11:10	3/19/2013 20:19	Semivolatile Organics (GC/MS)
Total	152094	3/13/2013 14:30	3/18/2013 11:10	3/19/2013 20:19	Semivolatile Organics (GC/MS)
Total	152094	3/13/2013 14:30	3/18/2013 11:10	3/19/2013 20:19	Semivolatile Organics (GC/MS)
Total	152094	3/13/2013 14:30	3/18/2013 11:10	3/19/2013 20:19	Semivolatile Organics (GC/MS)
Total	152094	3/13/2013 14:30	3/18/2013 11:10	3/19/2013 20:19	Semivolatile Organics (GC/MS)
Total	152094	3/13/2013 14:30	3/18/2013 11:10	3/19/2013 20:19	Semivolatile Organics (GC/MS)
Total	152094	3/13/2013 14:30	3/18/2013 11:10	3/19/2013 20:19	Semivolatile Organics (GC/MS)
Total	152094	3/13/2013 14:30	3/18/2013 11:10	3/19/2013 20:19	Semivolatile Organics (GC/MS)
Total	152094	3/13/2013 14:30	3/18/2013 11:10	3/19/2013 20:19	Semivolatile Organics (GC/MS)
Total	152094	3/13/2013 14:30	3/18/2013 11:10	3/19/2013 20:19	Semivolatile Organics (GC/MS)
Total	152094	3/13/2013 14:30	3/18/2013 11:10	3/19/2013 20:19	Semivolatile Organics (GC/MS)
Total	152094	3/13/2013 14:30	3/18/2013 11:10	3/19/2013 20:19	Semivolatile Organics (GC/MS)
Total	152094	3/13/2013 14:30	3/18/2013 11:10	3/19/2013 20:19	Semivolatile Organics (GC/MS)
Total	153936	3/13/2013 14:37	3/25/2013 15:05	4/3/2013 9:42	Semivolatile Organics (GC/MS)
Total	153936	3/13/2013 14:37	3/25/2013 15:05	4/3/2013 9:42	Semivolatile Organics (GC/MS)
Total	153936	3/13/2013 14:37	3/25/2013 15:05	4/3/2013 9:42	Semivolatile Organics (GC/MS)
Total	153936	3/13/2013 14:37	3/25/2013 15:05	4/3/2013 9:42	Semivolatile Organics (GC/MS)
Total	153936	3/13/2013 14:37	3/25/2013 15:05	4/3/2013 9:42	Semivolatile Organics (GC/MS)
Total	153936	3/13/2013 14:37	3/25/2013 15:05	4/3/2013 9:42	Semivolatile Organics (GC/MS)
Total	153936	3/13/2013 14:37	3/25/2013 15:05	4/3/2013 9:42	Semivolatile Organics (GC/MS)
Total	153936	3/13/2013 14:37	3/25/2013 15:05	4/3/2013 9:42	Semivolatile Organics (GC/MS)
Total	153936	3/13/2013 14:37	3/25/2013 15:05	4/3/2013 9:42	Semivolatile Organics (GC/MS)
Total	153936	3/13/2013 14:37	3/25/2013 15:05	4/3/2013 9:42	Semivolatile Organics (GC/MS)
Total	153936	3/13/2013 14:37	3/25/2013 15:05	4/3/2013 9:42	Semivolatile Organics (GC/MS)
Total	153936	3/13/2013 14:37	3/25/2013 15:05	4/3/2013 9:42	Semivolatile Organics (GC/MS)
Total	153936	3/13/2013 14:37	3/25/2013 15:05	4/3/2013 9:42	Semivolatile Organics (GC/MS)
Total	153936	3/13/2013 14:37	3/25/2013 15:05	4/3/2013 9:42	Semivolatile Organics (GC/MS)
Total	153936	3/13/2013 14:37	3/25/2013 15:05	4/3/2013 9:42	Semivolatile Organics (GC/MS)

Total	153936	3/13/2013 14:37	3/25/2013 15:05	4/3/2013 9:42	Semivolatile Organics (GC/MS)
Total	153936	3/13/2013 14:37	3/25/2013 15:05	4/3/2013 9:42	Semivolatile Organics (GC/MS)
Total	151331	3/13/2013 14:37	NA	3/15/2013 15:46	Percent Moisture
Total	151331	3/13/2013 14:37	NA	3/15/2013 15:46	Percent Moisture
Total	151331	3/13/2013 14:40	NA	3/15/2013 15:46	Percent Moisture
Total	153784	3/13/2013 14:40	3/25/2013 15:05	4/1/2013 17:04	Semivolatile Organics (GC/MS)
Total	153784	3/13/2013 14:40	3/25/2013 15:05	4/1/2013 17:04	Semivolatile Organics (GC/MS)
Total	153784	3/13/2013 14:40	3/25/2013 15:05	4/1/2013 17:04	Semivolatile Organics (GC/MS)
Total	153784	3/13/2013 14:40	3/25/2013 15:05	4/1/2013 17:04	Semivolatile Organics (GC/MS)
Total	153784	3/13/2013 14:40	3/25/2013 15:05	4/1/2013 17:04	Semivolatile Organics (GC/MS)
Total	153784	3/13/2013 14:40	3/25/2013 15:05	4/1/2013 17:04	Semivolatile Organics (GC/MS)
Total	153784	3/13/2013 14:40	3/25/2013 15:05	4/1/2013 17:04	Semivolatile Organics (GC/MS)
Total	153784	3/13/2013 14:40	3/25/2013 15:05	4/1/2013 17:04	Semivolatile Organics (GC/MS)
Total	153784	3/13/2013 14:40	3/25/2013 15:05	4/1/2013 17:04	Semivolatile Organics (GC/MS)
Total	153784	3/13/2013 14:40	3/25/2013 15:05	4/1/2013 17:04	Semivolatile Organics (GC/MS)
Total	153784	3/13/2013 14:40	3/25/2013 15:05	4/1/2013 17:04	Semivolatile Organics (GC/MS)
Total	153784	3/13/2013 14:40	3/25/2013 15:05	4/1/2013 17:04	Semivolatile Organics (GC/MS)
Total	153784	3/13/2013 14:40	3/25/2013 15:05	4/1/2013 17:04	Semivolatile Organics (GC/MS)
Total	153784	3/13/2013 14:40	3/25/2013 15:05	4/1/2013 17:04	Semivolatile Organics (GC/MS)
Total	153784	3/13/2013 14:40	3/25/2013 15:05	4/1/2013 17:04	Semivolatile Organics (GC/MS)
Total	151331	3/13/2013 14:40	NA	3/15/2013 15:46	Percent Moisture
Total	152094	3/13/2013 14:33	3/18/2013 11:10	3/19/2013 18:55	Semivolatile Organics (GC/MS)
Total	151331	3/13/2013 14:33	NA	3/15/2013 15:46	Percent Moisture
Total	151331	3/13/2013 14:33	NA	3/15/2013 15:46	Percent Moisture
Total	152094	3/13/2013 14:33	3/18/2013 11:10	3/19/2013 18:55	Semivolatile Organics (GC/MS)
Total	152094	3/13/2013 14:33	3/18/2013 11:10	3/19/2013 18:55	Semivolatile Organics (GC/MS)
Total	152094	3/13/2013 14:33	3/18/2013 11:10	3/19/2013 18:55	Semivolatile Organics (GC/MS)
Total	152094	3/13/2013 14:33	3/18/2013 11:10	3/19/2013 18:55	Semivolatile Organics (GC/MS)
Total	152094	3/13/2013 14:33	3/18/2013 11:10	3/19/2013 18:55	Semivolatile Organics (GC/MS)
Total	152094	3/13/2013 14:33	3/18/2013 11:10	3/19/2013 18:55	Semivolatile Organics (GC/MS)
Total	152094	3/13/2013 14:33	3/18/2013 11:10	3/19/2013 18:55	Semivolatile Organics (GC/MS)

Total	152094	3/13/2013 14:33	3/18/2013 11:10	3/19/2013 18:55	Semivolatile Organics (GC/MS)
Total	152094	3/13/2013 14:33	3/18/2013 11:10	3/19/2013 18:55	Semivolatile Organics (GC/MS)
Total	152094	3/13/2013 14:33	3/18/2013 11:10	3/19/2013 18:55	Semivolatile Organics (GC/MS)
Total	152094	3/13/2013 14:33	3/18/2013 11:10	3/19/2013 18:55	Semivolatile Organics (GC/MS)
Total	152094	3/13/2013 14:33	3/18/2013 11:10	3/19/2013 18:55	Semivolatile Organics (GC/MS)
Total	152094	3/13/2013 14:33	3/18/2013 11:10	3/19/2013 18:55	Semivolatile Organics (GC/MS)
Total	152094	3/13/2013 14:33	3/18/2013 11:10	3/19/2013 18:55	Semivolatile Organics (GC/MS)
Total	152094	3/13/2013 14:33	3/18/2013 11:10	3/19/2013 18:55	Semivolatile Organics (GC/MS)
Total	152094	3/13/2013 14:33	3/18/2013 11:10	3/19/2013 18:55	Semivolatile Organics (GC/MS)
Total	152094	3/13/2013 14:33	3/18/2013 11:10	3/19/2013 18:55	Semivolatile Organics (GC/MS)
Total	151330	3/13/2013 11:03	NA	3/15/2013 15:28	Percent Moisture
Total	151330	3/13/2013 11:03	NA	3/15/2013 15:28	Percent Moisture
Total	152094	3/13/2013 14:35	3/18/2013 11:10	3/19/2013 17:09	Semivolatile Organics (GC/MS)
Total	152094	3/13/2013 14:35	3/18/2013 11:10	3/19/2013 17:09	Semivolatile Organics (GC/MS)
Total	151331	3/13/2013 14:35	NA	3/15/2013 15:46	Percent Moisture
Total	152094	3/13/2013 14:35	3/18/2013 11:10	3/19/2013 17:09	Semivolatile Organics (GC/MS)
Total	151331	3/13/2013 14:35	NA	3/15/2013 15:46	Percent Moisture
Total	152094	3/13/2013 14:35	3/18/2013 11:10	3/19/2013 17:09	Semivolatile Organics (GC/MS)
Total	152094	3/13/2013 14:35	3/18/2013 11:10	3/19/2013 17:09	Semivolatile Organics (GC/MS)
Total	152094	3/13/2013 14:35	3/18/2013 11:10	3/19/2013 17:09	Semivolatile Organics (GC/MS)
Total	152094	3/13/2013 14:35	3/18/2013 11:10	3/19/2013 17:09	Semivolatile Organics (GC/MS)
Total	152094	3/13/2013 14:35	3/18/2013 11:10	3/19/2013 17:09	Semivolatile Organics (GC/MS)
Total	152094	3/13/2013 14:35	3/18/2013 11:10	3/19/2013 17:09	Semivolatile Organics (GC/MS)
Total	152094	3/13/2013 14:35	3/18/2013 11:10	3/19/2013 17:09	Semivolatile Organics (GC/MS)
Total	152094	3/13/2013 14:35	3/18/2013 11:10	3/19/2013 17:09	Semivolatile Organics (GC/MS)
Total	152094	3/13/2013 14:35	3/18/2013 11:10	3/19/2013 17:09	Semivolatile Organics (GC/MS)
Total	152094	3/13/2013 14:35	3/18/2013 11:10	3/19/2013 17:09	Semivolatile Organics (GC/MS)
Total	152094	3/13/2013 14:35	3/18/2013 11:10	3/19/2013 17:09	Semivolatile Organics (GC/MS)
Total	152094	3/13/2013 14:35	3/18/2013 11:10	3/19/2013 17:09	Semivolatile Organics (GC/MS)
Total	152094	3/13/2013 14:35	3/18/2013 11:10	3/19/2013 17:09	Semivolatile Organics (GC/MS)
Total	152094	3/13/2013 14:35	3/18/2013 11:10	3/19/2013 17:09	Semivolatile Organics (GC/MS)
Total	153936	3/13/2013 14:48	3/25/2013 15:05	4/3/2013 8:38	Semivolatile Organics (GC/MS)
Total	153936	3/13/2013 14:48	3/25/2013 15:05	4/3/2013 8:38	Semivolatile Organics (GC/MS)

Total	153936	3/13/2013 14:48	3/25/2013 15:05	4/3/2013 8:38	Semivolatile Organics (GC/MS)
Total	153936	3/13/2013 14:48	3/25/2013 15:05	4/3/2013 8:38	Semivolatile Organics (GC/MS)
Total	153936	3/13/2013 14:48	3/25/2013 15:05	4/3/2013 8:38	Semivolatile Organics (GC/MS)
Total	153936	3/13/2013 14:48	3/25/2013 15:05	4/3/2013 8:38	Semivolatile Organics (GC/MS)
Total	153936	3/13/2013 14:48	3/25/2013 15:05	4/3/2013 8:38	Semivolatile Organics (GC/MS)
Total	153936	3/13/2013 14:48	3/25/2013 15:05	4/3/2013 8:38	Semivolatile Organics (GC/MS)
Total	153936	3/13/2013 14:48	3/25/2013 15:05	4/3/2013 8:38	Semivolatile Organics (GC/MS)
Total	153936	3/13/2013 14:48	3/25/2013 15:05	4/3/2013 8:38	Semivolatile Organics (GC/MS)
Total	153936	3/13/2013 14:48	3/25/2013 15:05	4/3/2013 8:38	Semivolatile Organics (GC/MS)
Total	151331	3/13/2013 14:48	NA	3/15/2013 15:46	Percent Moisture
Total	153936	3/13/2013 14:48	3/25/2013 15:05	4/3/2013 8:38	Semivolatile Organics (GC/MS)
Total	153936	3/13/2013 14:48	3/25/2013 15:05	4/3/2013 8:38	Semivolatile Organics (GC/MS)
Total	153936	3/13/2013 14:48	3/25/2013 15:05	4/3/2013 8:38	Semivolatile Organics (GC/MS)
Total	153936	3/13/2013 14:48	3/25/2013 15:05	4/3/2013 8:38	Semivolatile Organics (GC/MS)
Total	153936	3/13/2013 14:48	3/25/2013 15:05	4/3/2013 8:38	Semivolatile Organics (GC/MS)
Total	151331	3/13/2013 14:48	NA	3/15/2013 15:46	Percent Moisture
Total	153936	3/13/2013 14:48	3/25/2013 15:05	4/3/2013 8:38	Semivolatile Organics (GC/MS)
Total	153936	3/13/2013 14:48	3/25/2013 15:05	4/3/2013 8:38	Semivolatile Organics (GC/MS)
Total	153936	3/13/2013 14:50	3/25/2013 15:05	4/3/2013 7:56	Semivolatile Organics (GC/MS)
Total	151335	3/13/2013 14:50	NA	3/15/2013 16:07	Percent Moisture
Total	153936	3/13/2013 14:50	3/25/2013 15:05	4/3/2013 7:56	Semivolatile Organics (GC/MS)
Total	153936	3/13/2013 14:50	3/25/2013 15:05	4/3/2013 7:56	Semivolatile Organics (GC/MS)
Total	151335	3/13/2013 14:50	NA	3/15/2013 16:07	Percent Moisture
Total	153936	3/13/2013 14:50	3/25/2013 15:05	4/3/2013 7:56	Semivolatile Organics (GC/MS)
Total	153936	3/13/2013 14:50	3/25/2013 15:05	4/3/2013 7:56	Semivolatile Organics (GC/MS)
Total	153936	3/13/2013 14:50	3/25/2013 15:05	4/3/2013 7:56	Semivolatile Organics (GC/MS)
Total	153936	3/13/2013 14:50	3/25/2013 15:05	4/3/2013 7:56	Semivolatile Organics (GC/MS)
Total	153936	3/13/2013 14:50	3/25/2013 15:05	4/3/2013 7:56	Semivolatile Organics (GC/MS)
Total	153936	3/13/2013 14:50	3/25/2013 15:05	4/3/2013 7:56	Semivolatile Organics (GC/MS)
Total	153936	3/13/2013 14:50	3/25/2013 15:05	4/3/2013 7:56	Semivolatile Organics (GC/MS)
Total	153936	3/13/2013 14:50	3/25/2013 15:05	4/3/2013 7:56	Semivolatile Organics (GC/MS)
Total	153936	3/13/2013 14:50	3/25/2013 15:05	4/3/2013 7:56	Semivolatile Organics (GC/MS)
Total	153936	3/13/2013 14:50	3/25/2013 15:05	4/3/2013 7:56	Semivolatile Organics (GC/MS)
Total	153936	3/13/2013 14:50	3/25/2013 15:05	4/3/2013 7:56	Semivolatile Organics (GC/MS)

Total	153936	3/13/2013 14:50	3/25/2013 15:05	4/3/2013 7:56	Semivolatile Organics (GC/MS)
Total	153936	3/13/2013 14:50	3/25/2013 15:05	4/3/2013 7:56	Semivolatile Organics (GC/MS)
Total	153936	3/13/2013 14:50	3/25/2013 15:05	4/3/2013 7:56	Semivolatile Organics (GC/MS)
Total	153936	3/13/2013 14:50	3/25/2013 15:05	4/3/2013 7:56	Semivolatile Organics (GC/MS)
Total	152094	3/13/2013 14:56	3/18/2013 11:10	3/19/2013 18:33	Semivolatile Organics (GC/MS)
Total	152094	3/13/2013 14:56	3/18/2013 11:10	3/19/2013 18:33	Semivolatile Organics (GC/MS)
Total	152094	3/13/2013 14:56	3/18/2013 11:10	3/19/2013 18:33	Semivolatile Organics (GC/MS)
Total	152094	3/13/2013 14:56	3/18/2013 11:10	3/19/2013 18:33	Semivolatile Organics (GC/MS)
Total	152094	3/13/2013 14:56	3/18/2013 11:10	3/19/2013 18:33	Semivolatile Organics (GC/MS)
Total	152094	3/13/2013 14:56	3/18/2013 11:10	3/19/2013 18:33	Semivolatile Organics (GC/MS)
Total	152094	3/13/2013 14:56	3/18/2013 11:10	3/19/2013 18:33	Semivolatile Organics (GC/MS)
Total	152094	3/13/2013 14:56	3/18/2013 11:10	3/19/2013 18:33	Semivolatile Organics (GC/MS)
Total	152094	3/13/2013 14:56	3/18/2013 11:10	3/19/2013 18:33	Semivolatile Organics (GC/MS)
Total	152094	3/13/2013 14:56	3/18/2013 11:10	3/19/2013 18:33	Semivolatile Organics (GC/MS)
Total	152094	3/13/2013 14:56	3/18/2013 11:10	3/19/2013 18:33	Semivolatile Organics (GC/MS)
Total	152094	3/13/2013 14:56	3/18/2013 11:10	3/19/2013 18:33	Semivolatile Organics (GC/MS)
Total	152094	3/13/2013 14:56	3/18/2013 11:10	3/19/2013 18:33	Semivolatile Organics (GC/MS)
Total	152094	3/13/2013 14:56	3/18/2013 11:10	3/19/2013 18:33	Semivolatile Organics (GC/MS)
Total	152094	3/13/2013 14:56	3/18/2013 11:10	3/19/2013 18:33	Semivolatile Organics (GC/MS)
Total	152094	3/13/2013 14:56	3/18/2013 11:10	3/19/2013 18:33	Semivolatile Organics (GC/MS)
Total	151335	3/13/2013 14:56	NA	3/15/2013 16:07	Percent Moisture
Total	151335	3/13/2013 14:56	NA	3/15/2013 16:07	Percent Moisture
Total	151335	3/13/2013 15:00	NA	3/15/2013 16:07	Percent Moisture
Total	151335	3/13/2013 15:00	NA	3/15/2013 16:07	Percent Moisture
Total	153784	3/13/2013 15:00	3/25/2013 15:05	4/1/2013 13:32	Semivolatile Organics (GC/MS)
Total	153784	3/13/2013 15:00	3/25/2013 15:05	4/1/2013 13:32	Semivolatile Organics (GC/MS)
Total	153784	3/13/2013 15:00	3/25/2013 15:05	4/1/2013 13:32	Semivolatile Organics (GC/MS)
Total	153784	3/13/2013 15:00	3/25/2013 15:05	4/1/2013 13:32	Semivolatile Organics (GC/MS)
Total	153784	3/13/2013 15:00	3/25/2013 15:05	4/1/2013 13:32	Semivolatile Organics (GC/MS)
Total	153784	3/13/2013 15:00	3/25/2013 15:05	4/1/2013 13:32	Semivolatile Organics (GC/MS)
Total	153784	3/13/2013 15:00	3/25/2013 15:05	4/1/2013 13:32	Semivolatile Organics (GC/MS)
Total	153784	3/13/2013 15:00	3/25/2013 15:05	4/1/2013 13:32	Semivolatile Organics (GC/MS)

Total	153784	3/13/2013 15:00	3/25/2013 15:05	4/1/2013 13:32	Semivolatile Organics (GC/MS)
Total	153784	3/13/2013 15:00	3/25/2013 15:05	4/1/2013 13:32	Semivolatile Organics (GC/MS)
Total	153784	3/13/2013 15:00	3/25/2013 15:05	4/1/2013 13:32	Semivolatile Organics (GC/MS)
Total	153784	3/13/2013 15:00	3/25/2013 15:05	4/1/2013 13:32	Semivolatile Organics (GC/MS)
Total	153784	3/13/2013 15:00	3/25/2013 15:05	4/1/2013 13:32	Semivolatile Organics (GC/MS)
Total	153784	3/13/2013 15:00	3/25/2013 15:05	4/1/2013 13:32	Semivolatile Organics (GC/MS)
Total	153784	3/13/2013 15:00	3/25/2013 15:05	4/1/2013 13:32	Semivolatile Organics (GC/MS)
Total	153784	3/13/2013 15:00	3/25/2013 15:05	4/1/2013 13:32	Semivolatile Organics (GC/MS)
Total	153784	3/13/2013 15:00	3/25/2013 15:05	4/1/2013 13:32	Semivolatile Organics (GC/MS)
Total	153784	3/13/2013 15:00	3/25/2013 15:05	4/1/2013 13:32	Semivolatile Organics (GC/MS)
Total	151335	3/13/2013 15:15	NA	3/15/2013 16:07	Percent Moisture
Total	151335	3/13/2013 15:15	NA	3/15/2013 16:07	Percent Moisture
Total	153936	3/13/2013 15:15	3/25/2013 15:05	4/3/2013 6:30	Semivolatile Organics (GC/MS)
Total	153936	3/13/2013 15:15	3/25/2013 15:05	4/3/2013 6:30	Semivolatile Organics (GC/MS)
Total	153936	3/13/2013 15:15	3/25/2013 15:05	4/3/2013 6:30	Semivolatile Organics (GC/MS)
Total	153936	3/13/2013 15:15	3/25/2013 15:05	4/3/2013 6:30	Semivolatile Organics (GC/MS)
Total	153936	3/13/2013 15:15	3/25/2013 15:05	4/3/2013 6:30	Semivolatile Organics (GC/MS)
Total	153936	3/13/2013 15:15	3/25/2013 15:05	4/3/2013 6:30	Semivolatile Organics (GC/MS)
Total	153936	3/13/2013 15:15	3/25/2013 15:05	4/3/2013 6:30	Semivolatile Organics (GC/MS)
Total	153936	3/13/2013 15:15	3/25/2013 15:05	4/3/2013 6:30	Semivolatile Organics (GC/MS)
Total	153936	3/13/2013 15:15	3/25/2013 15:05	4/3/2013 6:30	Semivolatile Organics (GC/MS)
Total	153936	3/13/2013 15:15	3/25/2013 15:05	4/3/2013 6:30	Semivolatile Organics (GC/MS)
Total	153936	3/13/2013 15:15	3/25/2013 15:05	4/3/2013 6:30	Semivolatile Organics (GC/MS)
Total	153936	3/13/2013 15:15	3/25/2013 15:05	4/3/2013 6:30	Semivolatile Organics (GC/MS)
Total	153936	3/13/2013 15:15	3/25/2013 15:05	4/3/2013 6:30	Semivolatile Organics (GC/MS)
Total	153936	3/13/2013 15:15	3/25/2013 15:05	4/3/2013 6:30	Semivolatile Organics (GC/MS)
Total	153936	3/13/2013 15:15	3/25/2013 15:05	4/3/2013 6:30	Semivolatile Organics (GC/MS)
Total	153936	3/13/2013 15:15	3/25/2013 15:05	4/3/2013 6:30	Semivolatile Organics (GC/MS)
Total	151335	3/13/2013 15:20	NA	3/15/2013 16:07	Percent Moisture
Total	153784	3/13/2013 15:20	3/25/2013 15:05	4/1/2013 12:50	Semivolatile Organics (GC/MS)
Total	151335	3/13/2013 15:20	NA	3/15/2013 16:07	Percent Moisture
Total	153784	3/13/2013 15:20	3/25/2013 15:05	4/1/2013 12:50	Semivolatile Organics (GC/MS)

Total	153784	3/13/2013 15:20	3/25/2013 15:05	4/1/2013 12:50	Semivolatile Organics (GC/MS)
Total	153784	3/13/2013 15:20	3/25/2013 15:05	4/1/2013 12:50	Semivolatile Organics (GC/MS)
Total	153784	3/13/2013 15:20	3/25/2013 15:05	4/1/2013 12:50	Semivolatile Organics (GC/MS)
Total	153784	3/13/2013 15:20	3/25/2013 15:05	4/1/2013 12:50	Semivolatile Organics (GC/MS)
Total	153784	3/13/2013 15:20	3/25/2013 15:05	4/1/2013 12:50	Semivolatile Organics (GC/MS)
Total	153784	3/13/2013 15:20	3/25/2013 15:05	4/1/2013 12:50	Semivolatile Organics (GC/MS)
Total	153784	3/13/2013 15:20	3/25/2013 15:05	4/1/2013 12:50	Semivolatile Organics (GC/MS)
Total	153784	3/13/2013 15:20	3/25/2013 15:05	4/1/2013 12:50	Semivolatile Organics (GC/MS)
Total	153784	3/13/2013 15:20	3/25/2013 15:05	4/1/2013 12:50	Semivolatile Organics (GC/MS)
Total	153784	3/13/2013 15:20	3/25/2013 15:05	4/1/2013 12:50	Semivolatile Organics (GC/MS)
Total	153784	3/13/2013 15:20	3/25/2013 15:05	4/1/2013 12:50	Semivolatile Organics (GC/MS)
Total	153784	3/13/2013 15:20	3/25/2013 15:05	4/1/2013 12:50	Semivolatile Organics (GC/MS)
Total	153784	3/13/2013 15:20	3/25/2013 15:05	4/1/2013 12:50	Semivolatile Organics (GC/MS)
Total	153784	3/13/2013 15:20	3/25/2013 15:05	4/1/2013 12:50	Semivolatile Organics (GC/MS)
Total	153784	3/13/2013 15:20	3/25/2013 15:05	4/1/2013 12:50	Semivolatile Organics (GC/MS)
Total	151330	3/13/2013 11:00	NA	3/15/2013 15:28	Percent Moisture
Total	151330	3/13/2013 11:00	NA	3/15/2013 15:28	Percent Moisture
Total	152119	3/13/2013 11:00	3/18/2013 11:10	3/20/2013 18:21	Semivolatile Organics (GC/MS)
Total	152119	3/13/2013 11:00	3/18/2013 11:10	3/20/2013 18:21	Semivolatile Organics (GC/MS)
Total	152119	3/13/2013 11:00	3/18/2013 11:10	3/20/2013 18:21	Semivolatile Organics (GC/MS)
Total	152119	3/13/2013 11:00	3/18/2013 11:10	3/20/2013 18:21	Semivolatile Organics (GC/MS)
Total	152119	3/13/2013 11:00	3/18/2013 11:10	3/20/2013 18:21	Semivolatile Organics (GC/MS)
Total	152119	3/13/2013 11:00	3/18/2013 11:10	3/20/2013 18:21	Semivolatile Organics (GC/MS)
Total	152119	3/13/2013 11:00	3/18/2013 11:10	3/20/2013 18:21	Semivolatile Organics (GC/MS)
Total	152119	3/13/2013 11:00	3/18/2013 11:10	3/20/2013 18:21	Semivolatile Organics (GC/MS)
Total	152119	3/13/2013 11:00	3/18/2013 11:10	3/20/2013 18:21	Semivolatile Organics (GC/MS)
Total	152119	3/13/2013 11:00	3/18/2013 11:10	3/20/2013 18:21	Semivolatile Organics (GC/MS)
Total	152119	3/13/2013 11:00	3/18/2013 11:10	3/20/2013 18:21	Semivolatile Organics (GC/MS)
Total	152119	3/13/2013 11:00	3/18/2013 11:10	3/20/2013 18:21	Semivolatile Organics (GC/MS)
Total	152119	3/13/2013 11:00	3/18/2013 11:10	3/20/2013 18:21	Semivolatile Organics (GC/MS)
Total	152119	3/13/2013 11:00	3/18/2013 11:10	3/20/2013 18:21	Semivolatile Organics (GC/MS)
Total	152119	3/13/2013 11:00	3/18/2013 11:10	3/20/2013 18:21	Semivolatile Organics (GC/MS)
Total	152119	3/13/2013 11:00	3/18/2013 11:10	3/20/2013 18:21	Semivolatile Organics (GC/MS)

Total	152119	3/13/2013 11:00	3/18/2013 11:10	3/20/2013 18:21	Semivolatile Organics (GC/MS)
Total	152119	3/13/2013 11:00	3/18/2013 11:10	3/20/2013 18:21	Semivolatile Organics (GC/MS)
Total	151330	3/13/2013 10:58	NA	3/15/2013 15:28	Percent Moisture
Total	151330	3/13/2013 10:58	NA	3/15/2013 15:28	Percent Moisture
Total	152094	3/13/2013 10:58	3/18/2013 11:10	3/19/2013 19:16	Semivolatile Organics (GC/MS)
Total	152094	3/13/2013 10:58	3/18/2013 11:10	3/19/2013 19:16	Semivolatile Organics (GC/MS)
Total	152094	3/13/2013 10:58	3/18/2013 11:10	3/19/2013 19:16	Semivolatile Organics (GC/MS)
Total	152094	3/13/2013 10:58	3/18/2013 11:10	3/19/2013 19:16	Semivolatile Organics (GC/MS)
Total	152094	3/13/2013 10:58	3/18/2013 11:10	3/19/2013 19:16	Semivolatile Organics (GC/MS)
Total	152094	3/13/2013 10:58	3/18/2013 11:10	3/19/2013 19:16	Semivolatile Organics (GC/MS)
Total	152094	3/13/2013 10:58	3/18/2013 11:10	3/19/2013 19:16	Semivolatile Organics (GC/MS)
Total	152094	3/13/2013 10:58	3/18/2013 11:10	3/19/2013 19:16	Semivolatile Organics (GC/MS)
Total	152094	3/13/2013 10:58	3/18/2013 11:10	3/19/2013 19:16	Semivolatile Organics (GC/MS)
Total	152094	3/13/2013 10:58	3/18/2013 11:10	3/19/2013 19:16	Semivolatile Organics (GC/MS)
Total	152094	3/13/2013 10:58	3/18/2013 11:10	3/19/2013 19:16	Semivolatile Organics (GC/MS)
Total	152094	3/13/2013 10:58	3/18/2013 11:10	3/19/2013 19:16	Semivolatile Organics (GC/MS)
Total	152094	3/13/2013 10:58	3/18/2013 11:10	3/19/2013 19:16	Semivolatile Organics (GC/MS)
Total	152094	3/13/2013 10:58	3/18/2013 11:10	3/19/2013 19:16	Semivolatile Organics (GC/MS)
Total	152094	3/13/2013 10:58	3/18/2013 11:10	3/19/2013 19:16	Semivolatile Organics (GC/MS)
Total	151330	3/13/2013 10:52	NA	3/15/2013 15:28	Percent Moisture
Total	151330	3/13/2013 10:52	NA	3/15/2013 15:28	Percent Moisture
Total	153784	3/13/2013 10:52	3/25/2013 15:05	4/1/2013 13:11	Semivolatile Organics (GC/MS)
Total	153784	3/13/2013 10:52	3/25/2013 15:05	4/1/2013 13:11	Semivolatile Organics (GC/MS)
Total	153784	3/13/2013 10:52	3/25/2013 15:05	4/1/2013 13:11	Semivolatile Organics (GC/MS)
Total	153784	3/13/2013 10:52	3/25/2013 15:05	4/1/2013 13:11	Semivolatile Organics (GC/MS)
Total	153784	3/13/2013 10:52	3/25/2013 15:05	4/1/2013 13:11	Semivolatile Organics (GC/MS)
Total	153784	3/13/2013 10:52	3/25/2013 15:05	4/1/2013 13:11	Semivolatile Organics (GC/MS)
Total	153784	3/13/2013 10:52	3/25/2013 15:05	4/1/2013 13:11	Semivolatile Organics (GC/MS)
Total	153784	3/13/2013 10:52	3/25/2013 15:05	4/1/2013 13:11	Semivolatile Organics (GC/MS)
Total	153784	3/13/2013 10:52	3/25/2013 15:05	4/1/2013 13:11	Semivolatile Organics (GC/MS)

Total	153784	3/13/2013 10:52	3/25/2013 15:05	4/1/2013 13:11	Semivolatile Organics (GC/MS)
Total	153784	3/13/2013 10:52	3/25/2013 15:05	4/1/2013 13:11	Semivolatile Organics (GC/MS)
Total	153784	3/13/2013 10:52	3/25/2013 15:05	4/1/2013 13:11	Semivolatile Organics (GC/MS)
Total	153784	3/13/2013 10:52	3/25/2013 15:05	4/1/2013 13:11	Semivolatile Organics (GC/MS)
Total	153784	3/13/2013 10:52	3/25/2013 15:05	4/1/2013 13:11	Semivolatile Organics (GC/MS)
Total	153784	3/13/2013 10:52	3/25/2013 15:05	4/1/2013 13:11	Semivolatile Organics (GC/MS)
Total	153784	3/13/2013 10:52	3/25/2013 15:05	4/1/2013 13:11	Semivolatile Organics (GC/MS)
Total	153784	3/13/2013 10:52	3/25/2013 15:05	4/1/2013 13:11	Semivolatile Organics (GC/MS)
Total	151330	3/13/2013 10:55	NA	3/15/2013 15:28	Percent Moisture
Total	151330	3/13/2013 10:55	NA	3/15/2013 15:28	Percent Moisture
Total	151330	3/13/2013 10:50	NA	3/15/2013 15:28	Percent Moisture
Total	151330	3/13/2013 10:50	NA	3/15/2013 15:28	Percent Moisture
Total	152094	3/13/2013 10:50	3/18/2013 11:10	3/19/2013 16:47	Semivolatile Organics (GC/MS)
Total	152094	3/13/2013 10:50	3/18/2013 11:10	3/19/2013 16:47	Semivolatile Organics (GC/MS)
Total	152094	3/13/2013 10:50	3/18/2013 11:10	3/19/2013 16:47	Semivolatile Organics (GC/MS)
Total	152094	3/13/2013 10:50	3/18/2013 11:10	3/19/2013 16:47	Semivolatile Organics (GC/MS)
Total	152094	3/13/2013 10:50	3/18/2013 11:10	3/19/2013 16:47	Semivolatile Organics (GC/MS)
Total	152094	3/13/2013 10:50	3/18/2013 11:10	3/19/2013 16:47	Semivolatile Organics (GC/MS)
Total	152094	3/13/2013 10:50	3/18/2013 11:10	3/19/2013 16:47	Semivolatile Organics (GC/MS)
Total	152094	3/13/2013 10:50	3/18/2013 11:10	3/19/2013 16:47	Semivolatile Organics (GC/MS)
Total	152094	3/13/2013 10:50	3/18/2013 11:10	3/19/2013 16:47	Semivolatile Organics (GC/MS)
Total	152094	3/13/2013 10:50	3/18/2013 11:10	3/19/2013 16:47	Semivolatile Organics (GC/MS)
Total	152094	3/13/2013 10:50	3/18/2013 11:10	3/19/2013 16:47	Semivolatile Organics (GC/MS)
Total	152094	3/13/2013 10:50	3/18/2013 11:10	3/19/2013 16:47	Semivolatile Organics (GC/MS)
Total	152094	3/13/2013 10:50	3/18/2013 11:10	3/19/2013 16:47	Semivolatile Organics (GC/MS)
Total	152094	3/13/2013 10:50	3/18/2013 11:10	3/19/2013 16:47	Semivolatile Organics (GC/MS)
Total	152094	3/13/2013 10:50	3/18/2013 11:10	3/19/2013 16:47	Semivolatile Organics (GC/MS)
Total	152094	3/13/2013 10:50	3/18/2013 11:10	3/19/2013 16:47	Semivolatile Organics (GC/MS)
Total	152094	3/13/2013 10:50	3/18/2013 11:10	3/19/2013 16:47	Semivolatile Organics (GC/MS)

2013 Soil & GW Sampling Lab Data

TestAmerica

THE LEADER IN ENVIRONMENTAL TESTING

SUMMARY OF ANALYTICAL RESULTS: 460-60366-1

Client ID		DE HSCA	DE HSCA	DE HSCA	DE HSCA	DE HSCA
Lab Sample ID		Surface Soil	Surface Soil	Surface Soil	Surface Soil	SubSurface Soil
Sampling Date		Critical	Critical	NonCritical	NonCritical	Critical
Matrix		Restricted	UnRestricted	Restricted	UnRestricted	Restricted
Unit		mg/kg	mg/kg	mg/kg	mg/kg	mg/kg
METALS-SOIL	CAS#					
SOIL BY 6010B						
Zinc	7440-66-6	2300	2300	61000	2300	2300

Highlighted Concentrations shown in bold type face exceed limits

DE HSCA	DE HSCA	DE HSCA	NVF-SBW08_SB D			NVF-SBW15_SB S			NVF-SBW11_SB D	
SubSurface Soil	SubSurface Soil	SubSurface Soil	460-60366-1			460-60366-2			460-60366-4	
Critical	NonCritical	NonCritical	07/15/2013 10:30:00			07/15/2013 11:00:00			07/15/2013 13:00:00	
UnRestricted	Restricted	UnRestricted	Soil			Soil			Soil	
mg/kg	mg/kg	mg/kg	mg/kg			mg/kg			mg/kg	
			Result	Q	MDL	Result	Q	MDL	Result	Q
2300	61000	2300	**17900**		30.0	**8420**		18.1	**12700**	

	NVF-SBW04_SB D			NVF-SBW03_SB S		
	460-60366-10			460-60366-19		
	07/15/2013 15:00:00			07/16/2013 14:05:00		
	Soil			Soil		
	mg/kg			mg/kg		
MDL	Result	Q	MDL	Result	Q	MDL
21.0	**2890**		6.9	**4160**		8.8

TestAmerica

THE LEADER IN ENVIRONMENTAL TESTING

SUMMARY OF ANALYTICAL RESULTS: 460-60377-1

Client ID		DE HSCA	DE HSCA	DE HSCA	DE HSCA	DE HSCA
Lab Sample ID		Surface Soil	Surface Soil	Surface Soil	Surface Soil	SubSurface Soil
Sampling Date		Critical	Critical	NonCritical	NonCritical	Critical
Matrix		Restricted	UnRestricted	Restricted	UnRestricted	Restricted
Dilution Factor						
Unit		mg/kg	mg/kg	mg/kg	mg/kg	mg/kg
VOA-8260B-SOIL	CAS#					
SOIL BY 8260B						
1,1,1-Trichloroethane	71-55-6	20	20	4100	160	20
1,1,2,2-Tetrachloroethane	79-34-5	0.2	0.2	29	0.6	0.2
1,1,2-Trichloroethane	79-00-5	0.5	0.5	100	1	0.5
1,1-Dichloroethane	75-34-3	8	8	5000	780	8
1,1-Dichloroethene	75-35-4	0.7	0.07	10	0.07	0.7
1,2,3-Trichlorobenzene	87-61-6	NA	NA	NA	NA	NA
1,2,4-Trichlorobenzene	120-82-1	28	28	2000	78	28
1,2-Dibromo-3-Chloropropane	96-12-8	0.02	0.02	4	0.5	0.02
1,2-Dibromoethane	106-93-4	0.01	0.008	0.07	0.008	0.01
1,2-Dichlorobenzene	95-50-1	60	60	5000	560	60
1,2-Dichloroethane	107-06-2	0.5	0.4	63	0.4	0.5
1,2-Dichloropropane	78-87-5	0.5	0.5	84	9	0.5
1,3-Dichlorobenzene	541-73-1	61	61	5000	230	61
1,4-Dichlorobenzene	106-46-7	10	10	240	27	10
1,4-Dioxane	123-91-1	0.6	0.6	520	58	0.6
2-Butanone	78-93-3	19	19	5000	1000	19
2-Hexanone	591-78-6	15	15	5000	310	15
4-Methyl-2-pentanone	108-10-1	1	1	5000	630	1
Acetone	67-64-1	6	6	5000	780	6
Benzene	71-43-2	0.5	0.5	200	0.8	0.5
Bromochloromethane	74-97-5	NA	NA	NA	NA	NA
Bromodichloromethane	75-27-4	10	10	92	10	10
Bromoform	75-25-2	10	10	720	53	10
Bromomethane	74-83-9	1	1	290	11	1
Carbon disulfide	75-15-0	10	10	5000	780	10
Carbon tetrachloride	56-23-5	0.5	0.3	44	0.3	0.5
Chlorobenzene	108-90-7	10	10	4100	130	10
Chloroethane	75-00-3	0.4	0.4	2000	220	0.4
Chloroform	67-66-3	10	0.3	940	0.3	10
Chloromethane	74-87-3	0.3	0.3	440	49	0.3

cis-1,2-Dichloroethene	156-59-2	7	7	2000	78	7
cis-1,3-Dichloropropene	10061-01-5	NA	NA	NA	NA	NA
Cyclohexane	110-82-7	NA	NA	NA	NA	NA
Dibromochloromethane	124-48-1	0.01	0.01	68	8	0.01
Dichlorodifluoromethane	75-71-8	100	100	5000	1000	100
Ethylbenzene	100-41-4	70	70	5000	400	70
Freon TF	76-13-1	640	640	5000	1000	640
Isopropylbenzene	98-82-8	110	110	5000	780	110
Methyl acetate	79-20-9	61	61	5000	1000	61
Methylcyclohexane	108-87-2	NA	NA	NA	NA	NA
Methylene Chloride	75-09-2	0.5	0.5	760	13	0.5
MTBE	1634-04-4	2	2	1000	39	2
Styrene	100-42-5	24	24	5000	1000	24
Tetrachloroethene	127-18-4	0.5	0.5	110	11	0.5
Toluene	108-88-3	100	100	5000	650	100
trans-1,2-Dichloroethene	156-60-5	10	10	4100	160	10
trans-1,3-Dichloropropene	10061-02-6	NA	NA	NA	NA	NA
Trichloroethene	79-01-6	0.5	0.5	520	5	0.5
Trichlorofluoromethane	75-69-4	200	200	5000	1000	200
Vinyl chloride	75-01-4	0.2	0.03	3	0.03	0.2
Xylenes, Total	1330-20-7	420	420	5000	420	420
Total Conc		NA	NA	NA	NA	NA
Total Estimated Conc. (TICs)		NA	NA	NA	NA	NA

*T There are no TICs reported for the sample
H : Sample was prepped or analyzed beyond the specified holding time
J H : Sample was prepped or analyzed beyond the specified holding time
U H : Indicates the analyte was analyzed for but not detected.

DE HSCA	DE HSCA	DE HSCA	_SBW_Composite _SB1		NVF_SBW_Composite _SB2			
SubSurface Soil	SubSurface Soil	SubSurface Soil	460-60377-1			460-60377-2		
Critical	NonCritical	NonCritical	07/17/2013 10:45:00			07/17/2013 10:50:00		
UnRestricted	Restricted	UnRestricted	Soil			Soil		
			1			1		
mg/kg	mg/kg	mg/kg	mg/kg			mg/kg		
			Result	Q	MDL	Result	Q	MDL
20	4100	160	0.00015	U H	0.00015	0.00016	U H	0.00016
0.2	29	0.6	0.00011	U H	0.00011	0.00011	U H	0.00011
0.5	100	1	0.00017	U H	0.00017	0.00017	U H	0.00017
8	5000	780	0.00013	U H	0.00013	0.00014	U H	0.00014
0.07	10	0.07	0.00023	U H	0.00023	0.00023	U H	0.00023
NA	NA	NA	0.00019	U H	0.00019	0.00020	U H	0.00020
28	2000	78	0.00023	U H	0.00023	0.00023	U H	0.00023
0.02	4	0.5	0.00052	U H	0.00052	0.00054	U H	0.00054
0.008	0.07	0.008	0.00018	U H	0.00018	0.00018	U H	0.00018
60	5000	560	0.00012	U H	0.00012	0.00012	U H	0.00012
0.4	63	0.4	0.00021	U H	0.00021	0.00022	U H	0.00022
0.5	84	9	0.00018	U H	0.00018	0.00018	U H	0.00018
61	5000	230	0.00019	U H	0.00019	0.00020	U H	0.00020
10	240	27	0.00013	U H	0.00013	0.00014	U H	0.00014
0.6	520	58	0.015	U H	0.015	0.016	U H	0.016
19	5000	1000	0.00075	U H	0.00075	0.00078	U H	0.00078
15	5000	310	0.00015	U H	0.00015	0.00016	U H	0.00016
1	5000	630	0.00024	U H	0.00024	0.00025	U H	0.00025
6	5000	780	0.0069	J H	0.002	0.0086	J H	0.0021
0.5	200	0.8	0.00018	U H	0.00018	0.00018	U H	0.00018
NA	NA	NA	0.00013	U H	0.00013	0.00014	U H	0.00014
10	92	10	0.00038	U H	0.00038	0.00039	U H	0.00039
10	720	53	0.00020	U H	0.00020	0.00021	U H	0.00021
1	290	11	0.00051	U H	0.00051	0.00053	U H	0.00053
10	5000	780	0.00018	U H	0.00018	0.00018	U H	0.00018
0.3	44	0.3	0.00018	U H	0.00018	0.00018	U H	0.00018
10	4100	130	0.00030	J H	0.00021	0.00044	J H	0.00022
0.4	2000	220	0.00039	U H	0.00039	0.00041	U H	0.00041
0.3	940	0.3	0.00028	U H	0.00028	0.00030	U H	0.00030
0.3	440	49	0.00019	U H	0.00019	0.00020	U H	0.00020

7	2000	78	0.00013	U H	0.00013	0.00014	U H	0.00014
NA	NA	NA	0.00017	U H	0.00017	0.00017	U H	0.00017
NA	NA	NA	0.00015	U H	0.00015	0.00016	U H	0.00016
0.01	68	8	0.00012	U H	0.00012	0.00012	U H	0.00012
100	5000	1000	0.00026	U H	0.00026	0.00027	U H	0.00027
70	5000	400	0.00020	U H	0.00020	0.00021	U H	0.00021
640	5000	1000	0.00013	U H	0.00013	0.00014	U H	0.00014
110	5000	780	0.00013	U H	0.00013	0.00014	U H	0.00014
61	5000	1000	0.00038	U H	0.00038	0.00039	U H	0.00039
NA	NA	NA	0.00012	U H	0.00012	0.00012	U H	0.00012
0.5	760	13	0.033	H	0.00018	0.027	H	0.00018
2	1000	39	0.00013	U H	0.00013	0.00014	U H	0.00014
24	5000	1000	0.00033	U H	0.00033	0.00034	U H	0.00034
0.5	110	11	0.0011	J H	0.00014	0.00060	J H	0.00015
100	5000	650	0.00026	J H	0.00017	0.00022	J H	0.00017
10	4100	160	0.00015	U H	0.00015	0.00016	U H	0.00016
NA	NA	NA	0.00012	U H	0.00012	0.00012	U H	0.00012
0.5	520	5	0.00014	U H	0.00014	0.00015	U H	0.00015
200	5000	1000	0.00019	U H	0.00019	0.00020	U H	0.00020
0.03	3	0.03	0.00040	U H	0.00040	0.00042	U H	0.00042
420	5000	420	0.00079	U H	0.00079	0.00083	U H	0.00083
NA	NA	NA	0.04156			0.03686		
NA	NA	NA	0*T			0*T		

TestAmerica

THE LEADER IN ENVIRONMENTAL TESTING

SUMMARY OF ANALYTICAL RESULTS: 460-60377-1

Client ID		DE HSCA	DE HSCA	DE HSCA	DE HSCA	DE HSCA
Lab Sample ID		Surface Soil	Surface Soil	Surface Soil	Surface Soil	SubSurface Soil
Sampling Date		Critical	Critical	NonCritical	NonCritical	Critical
Matrix		Restricted	UnRestricted	Restricted	UnRestricted	Restricted
Dilution Factor						
Unit		mg/kg	mg/kg	mg/kg	mg/kg	mg/kg
SVOA-8270C-SOIL	CAS#					
SOIL BY 8270C						
Acenaphthene	83-32-9	270	270	5000	470	270
Acenaphthylene	208-96-8	NA	NA	NA	NA	NA
Anthracene	120-12-7	5000	1000	5000	1000	5000
Benzo[a]anthracene	56-55-3	8	0.9	8	0.9	8
Benzo[a]pyrene	50-32-8	0.8	0.09	0.8	0.09	0.8
Benzo[b]fluoranthene	205-99-2	8	0.9	8	0.9	8
Benzo[g,h,i]perylene	191-24-2	NA	NA	NA	NA	NA
Benzo[k]fluoranthene	207-08-9	78	9	78	9	78
Chrysene	218-01-9	780	87	780	87	780
Dibenz(a,h)anthracene	53-70-3	0.8	0.09	0.8	0.09	0.8
Fluoranthene	206-44-0	1800	310	5000	310	1800
Fluorene	86-73-7	300	300	5000	310	300
Indeno[1,2,3-cd]pyrene	193-39-5	8	0.9	8	0.9	8
Naphthalene	91-20-3	5	5	4100	160	5
Phenanthrene	85-01-8	5000	1000	5000	1000	5000
Pyrene	129-00-0	1700	230	5000	230	1700
Total Conc		NA	NA	NA	NA	NA

H : Sample was prepped or analyzed beyond the specified holding time
J H : Result is less than the RL but greater than or equal to the MDL and the concentration is an approximate value.
U H : Sample was prepped or analyzed beyond the specified holding time

DE HSCA	DE HSCA	DE HSCA	_SBW_Composite _SB1			NVF_SBW_Composite _SB2		
SubSurface Soil	SubSurface Soil	SubSurface Soil	460-60377-1			460-60377-2		
Critical	NonCritical	NonCritical	07/17/2013 10:45:00			07/17/2013 10:50:00		
UnRestricted	Restricted	UnRestricted	Soil			Soil		
			1			1		
mg/kg	mg/kg	mg/kg	mg/kg			mg/kg		
			Result	Q	MDL	Result	Q	MDL
270	5000	470	0.054	U H	0.054	0.056	U H	0.056
NA	NA	NA	0.044	U H	0.044	0.046	U H	0.046
1000	5000	1000	0.045	U H	0.045	0.047	U H	0.047
0.9	8	0.9	0.0026	U H	0.0026	0.0027	U H	0.0027
0.09	0.8	0.09	0.063	H	0.0026	0.0027	U H	0.0027
0.9	8	0.9	0.097	H	0.0023	0.0024	U H	0.0024
NA	NA	NA	0.032	J H	0.028	0.029	U H	0.029
9	78	9	0.031	J H	0.0028	0.0029	U H	0.0029
87	780	87	0.086	J H	0.043	0.045	U H	0.045
0.09	0.8	0.09	0.0047	U H	0.0047	0.0049	U H	0.0049
310	5000	310	0.11	J H	0.050	0.051	U H	0.051
300	5000	310	0.048	U H	0.048	0.049	U H	0.049
0.9	8	0.9	0.037	H	0.0069	0.0072	U H	0.0072
5	4100	160	0.043	U H	0.043	0.045	U H	0.045
1000	5000	1000	0.056	J H	0.047	0.049	U H	0.049
230	5000	230	0.11	J H	0.031	0.032	U H	0.032
NA	NA	NA	0.622			0		

TestAmerica

THE LEADER IN ENVIRONMENTAL TESTING

SUMMARY OF ANALYTICAL RESULTS: 460-60377-1

Client ID		DE HSCA	DE HSCA	DE HSCA	DE HSCA	DE HSCA	DE HSCA
Lab Sample ID		Surface Soil	Surface Soil	Surface Soil	Surface Soil	SubSurface Soil	SubSurface Soil
Sampling Date		Critical	Critical	NonCritical	NonCritical	Critical	Critical
Matrix		Restricted	UnRestricted	Restricted	UnRestricted	Restricted	UnRestricted
Dilution Factor							
Unit		mg/kg	mg/kg	mg/kg	mg/kg	mg/kg	mg/kg
GCSVOA-8015B-SOIL	CAS#						
SOIL BY 8015B							
Diesel Range Organics (C10-C44)	STL00816	NA	NA	NA	NA	NA	NA

H : Sample was prepped or analyzed beyond the specified holding time

DE HSCA	DE HSCA	_SBW_Composite _SB1			NVF_SBW_Composite _SB2		
SubSurface Soil	SubSurface Soil	460-60377-1			460-60377-2		
NonCritical	NonCritical	07/17/2013 10:45:00			07/17/2013 10:50:00		
Restricted	UnRestricted	Soil			Soil		
		5			1		
mg/kg	mg/kg	mg/kg			mg/kg		
		Result	Q	MDL	Result	Q	MDL
NA	NA	430	H	49	74	H	10

TestAmerica

THE LEADER IN ENVIRONMENTAL TESTING

SUMMARY OF ANALYTICAL RESULTS: 460-60377-1

Client ID		DE HSCA	DE HSCA	DE HSCA	DE HSCA	DE HSCA	DE HSCA
Lab Sample ID		Surface Soil	Surface Soil	Surface Soil	Surface Soil	SubSurface Soil	SubSurface Soil
Sampling Date		Critical	Critical	NonCritical	NonCritical	Critical	Critical
Matrix		Restricted	UnRestricted	Restricted	UnRestricted	Restricted	UnRestricted
Dilution Factor							
Unit		mg/kg	mg/kg	mg/kg	mg/kg	mg/kg	mg/kg
GCSVOA-8082-SOIL	CAS#						
SOIL BY 8082							
Aroclor 1016	12674-11-2	18	5	82	5	18	5
Aroclor 1221	11104-28-2	0.5	0.3	3	0.3	0.5	0.3
Aroclor 1232	11141-16-5	0.5	0.3	3	0.3	0.5	0.3
Aroclor 1242	53469-21-9	3	0.3	3	0.3	3	0.3
Aroclor 1248	12672-29-6	3	0.3	3	0.3	3	0.3
Aroclor 1254	11097-69-1	3	0.3	3	0.3	3	0.3
Aroclor 1260	11096-82-5	3	0.3	3	0.3	3	0.3
Aroclor 1262	37324-23-5	NA	NA	NA	NA	NA	NA
Aroclor 1268	11100-14-4	NA	NA	NA	NA	NA	NA
Polychlorinated biphenyls, Total	1336-36-3	1	1	1	1	1	1

U H : Indicates the analyte was analyzed for but not detected.

DE HSCA	DE HSCA	_SBW_Composite _SB1		NVF_SBW_Composite _SB2			
SubSurface Soil	SubSurface Soil	460-60377-1			460-60377-2		
NonCritical	NonCritical	07/17/2013 10:45:00			07/17/2013 10:50:00		
Restricted	UnRestricted	Soil			Soil		
		1			1		
mg/kg	mg/kg	mg/kg			mg/kg		
		Result	Q	MDL	Result	Q	MDL
82	5	0.017	U H	0.017	0.017	U H	0.017
3	0.3	0.017	U H	0.017	0.017	U H	0.017
3	0.3	0.017	U H	0.017	0.017	U H	0.017
3	0.3	0.017	U H	0.017	0.017	U H	0.017
3	0.3	0.017	U H	0.017	0.017	U H	0.017
3	0.3	0.021	U H	0.021	0.022	U H	0.022
3	0.3	0.021	U H	0.021	0.022	U H	0.022
NA	NA	0.021	U H	0.021	0.022	U H	0.022
NA	NA	0.021	U H	0.021	0.022	U H	0.022
1	1	0.021	U H	0.021	0.022	U H	0.022

TestAmerica

THE LEADER IN ENVIRONMENTAL TESTING

SUMMARY OF ANALYTICAL RESULTS: 460-60377-1

Client ID		DE HSCA	DE HSCA	DE HSCA	DE HSCA	DE HSCA	DE HSCA
Lab Sample ID		Surface Soil	Surface Soil	Surface Soil	Surface Soil	SubSurface Soil	SubSurface Soil
Sampling Date		Critical	Critical	NonCritical	NonCritical	Critical	Critical
Matrix		Restricted	UnRestricted	Restricted	UnRestricted	Restricted	UnRestricted
Unit		mg/kg	mg/kg	mg/kg	mg/kg	mg/kg	mg/kg
METALS-SOIL	CAS#						
SOIL BY 6010B							
Antimony	7440-36-0	27	3	82	3	27	3
Arsenic	7440-38-2	3	0.4	4	0.4	3	0.4
Barium	7440-39-3	14000	550	14000	550	14000	550
Beryllium	7440-41-7	410	16	410	16	410	16
Cadmium	7440-43-9	38	4	100	4	38	4
Copper	7440-50-8	8200	310	8200	310	8200	310
Lead	7439-92-1	1000	400	1000	400	1000	400
Nickel	7440-02-0	650	160	4100	160	650	160
Thallium	7440-28-0	14	14	220	18	14	14
Zinc	7440-66-6	2300	2300	61000	2300	2300	2300

Highlighted Concentrations shown in bold type face exceed limits
J : Result is less than the RL but greater than or equal to the MDL and the concentration is an approximate value.
U : Indicates the analyte was analyzed for but not detected.

DE HSCA	DE HSCA	_SBW_Composite _SB1		NVF_SBW_Composite _SB2			
SubSurface Soil	SubSurface Soil	460-60377-1			460-60377-2		
NonCritical	NonCritical	07/17/2013 10:45:00			07/17/2013 10:50:00		
Restricted	UnRestricted	Soil			Soil		
mg/kg	mg/kg	mg/kg			mg/kg		
		Result	Q	MDL	Result	Q	MDL
82	3	1.4	U	1.4	1.3	U	1.3
4	0.4	**2.8**		1.1	**2.1**		0.96
14000	550	116		1.3	120		1.2
410	16	0.16	U	0.16	0.15	U	0.15
100	4	0.74	J	0.17	0.75	J	0.15
8200	310	81.5		2.2	27.8		2.0
1000	400	96.4		0.97	16.1		0.88
4100	160	34.9		0.99	17.7		0.90
220	18	1.3	U	1.3	1.2	U	1.2
61000	2300	1450		3.0	1580		2.8

TestAmerica

THE LEADER IN ENVIRONMENTAL TESTING

SUMMARY OF ANALYTICAL RESULTS: 460-60377-1

Client ID		NVF_SBW_Composite _SB1			NVF_SBW_Composite _SB2		
Lab Sample ID		460-60377-1			460-60377-2		
Sampling Date		07/17/2013 10:45:00			07/17/2013 10:50:00		
Matrix		TCLP			TCLP		
Unit		mg/l			mg/l		
METALS-TCLP	CAS#	Result	Q	MDL	Result	Q	MDL
TCLP BY 6010B							
Arsenic	7440-38-2	0.025	U	0.025	0.025	U	0.025
Barium	7440-39-3	1.0	U	1.0	1.0	U	1.0
Cadmium	7440-43-9	0.025		0.025	0.025	U	0.025
Chromium	7440-47-3	0.050	U	0.050	0.050	U	0.050
Lead	7439-92-1	0.19	B	0.025	1.8	B	0.025
Selenium	7782-49-2	0.050	U	0.050	0.050	U	0.050
Silver	7440-22-4	0.050	U	0.050	0.050	U	0.050

TCLP BY 7470A							
Mercury	7439-97-6	0.00020	U	0.00020	0.00020	U	0.00020

B : Compound was found in the blank and sample.
U : Indicates the analyte was analyzed for but not detected.

TestAmerica
THE LEADER IN ENVIRONMENTAL TESTING

SUMMARY OF ANALYTICAL RESULTS: 460-60377-1

Client ID		DE HSCA	DE HSCA	DE HSCA	DE HSCA	DE HSCA	DE HSCA
Lab Sample ID		Surface Soil	Surface Soil	Surface Soil	Surface Soil	SubSurface Soil	SubSurface Soil
Sampling Date		Critical	Critical	NonCritical	NonCritical	Critical	Critical
Matrix		Restricted	UnRestricted	Restricted	UnRestricted	Restricted	UnRestricted
WETCHEM-SOIL	CAS#						
SOIL BY 9095B							
Free Liquid (ml/100g)	STL00028	NA	NA	NA	NA	NA	NA

U : Indicates the analyte was analyzed for but not detected.

DE HSCA	DE HSCA	_SBW_Composite _SB1		NVF_SBW_Composite _SB2			
SubSurface Soil	SubSurface Soil	460-60377-1			460-60377-2		
NonCritical	NonCritical	07/17/2013 10:45:00			07/17/2013 10:50:00		
Restricted	UnRestricted	Soil			Soil		
		Result	Q	MDL	Result	Q	MDL
NA	NA	0.50	U	0.50	0.50	U	0.50

TestAmerica THE LEADER IN ENVIRONMENTAL TESTING

SUMMARY OF ANALYTICAL RESULTS: 460-59905-1

Client ID		DE HSCA	NVF_SBW08_MW			NVF_SBW908_MW			NVF_SBW15_MW		
Lab Sample ID		Groundwater	460-59905-1			460-59905-2			460-59905-3		
Sampling Date		Standard	07/18/2013 11:05:00			07/18/2013 11:10:00			07/18/2013 12:35:00		
Matrix			Water			Water			Water		
Unit		ug/l	ug/l			ug/l			ug/l		
METALS-WATER	CAS#		Result	Q	MDL	Result	Q	MDL	Result	Q	MDL
WATER BY 6010B											
Aluminum	7429-90-5	200	14400	U	14400	14400	U	14400	72.1	U	72.1
Aluminum, Dissolved	7429-90-5	200	14400	U	14400	14400	U	14400	**226**		72.1
Antimony	7440-36-0	6	1470	U	1470	1470	U	1470	7.4	U	7.4
Antimony, Dissolved	7440-36-0	6	1470	U	1470	1470	U	1470	7.4	U	7.4
Arsenic	7440-38-2	0.5	746	U	746	746	U	746	3.7	U	3.7
Arsenic, Dissolved	7440-38-2	0.5	746	U	746	746	U	746	3.7	U	3.7
Barium	7440-39-3	260	1190	U	1190	1190	U	1190	96.3	J	5.9
Barium, Dissolved	7440-39-3	260	1190	U	1190	1190	U	1190	135	J	5.9
Beryllium	7440-41-7	4	155	U	155	155	U	155	0.78	U	0.78
Beryllium, Dissolved	7440-41-7	4	155	U	155	155	U	155	0.78	U	0.78
Cadmium	7440-43-9	5	**262**	J	164	**258**	J	164	0.82	U	0.82
Cadmium, Dissolved	7440-43-9	5	**241**	J	164	**243**	J	164	0.82	U	0.82
Calcium	7440-70-2	NA	437000	J	60900	445000	J	60900	86600		305
Calcium, Dissolved	7440-70-2	NA	429000	J	60900	402000	J	60900	114000		305
Chromium	7440-47-3	NA	892	U	892	892	U	892	4.5	U	4.5
Chromium, Dissolved	7440-47-3	NA	892	U	892	892	U	892	4.5	U	4.5
Cobalt	7440-48-4	220	854	U	854	854	U	854	4.3	U	4.3
Cobalt, Dissolved	7440-48-4	220	854	U	854	854	U	854	4.3	U	4.3
Copper	7440-50-8	1300	1570	U	1570	1570	U	1570	7.8	U	7.8
Copper, Dissolved	7440-50-8	1300	1570	U	1570	1570	U	1570	7.8	U	7.8
Iron	7439-89-6	300	**34100**		14700	**36200**		14700	73.6	U	73.6
Iron, Dissolved	7439-89-6	300	**27300**	J	14700	**25800**	J	14700	109	J	73.6
Lead	7439-92-1	15	**952**	J	802	**1230**		802	4.0	U	4.0
Lead, Dissolved	7439-92-1	15	802	U	802	802	U	802	4.0	U	4.0
Magnesium	7439-95-4	NA	244000	J	64300	244000	J	64300	16100		321
Magnesium, Dissolved	7439-95-4	NA	243000	J	64300	224000	J	64300	15600		321
Manganese	7439-96-5	50	**8450**		861	**8460**		861	12.4	J	4.3
Manganese, Dissolved	7439-96-5	50	**8240**		861	**7620**		861	16.2		4.3
Nickel	7440-02-0	100	**2030**	J	996	**1950**	J	996	5.0	U	5.0
Nickel, Dissolved	7440-02-0	100	**2080**	J	996	**1860**	J	996	5.0	U	5.0
Potassium	7440-09-7	NA	105000	U	105000	105000	U	105000	13400		525
Potassium, Dissolved	7440-09-7	NA	105000	U	105000	105000	U	105000	19800		525
Selenium	7782-49-2	50	1150	U	1150	1150	U	1150	5.8	U	5.8
Selenium, Dissolved	7782-49-2	50	1150	U	1150	1150	U	1150	5.8	U	5.8
Silver	7440-22-4	100	268	U	268	268	U	268	1.3	U	1.3
Silver, Dissolved	7440-22-4	100	268	U	268	268	U	268	1.3	U	1.3
Sodium	7440-23-5	NA	259000	J	164000	259000	J	164000	17000		821

Sodium, Dissolved	7440-23-5	NA	260000	J	164000	240000	J	164000	20800		821
Thallium	7440-28-0	2	1050	U	1050	1050	U	1050	5.2	U	5.2
Thallium, Dissolved	7440-28-0	2	1050	U	1050	1050	U	1050	5.2	U	5.2
Vanadium	7440-62-2	26	809	U	809	809	U	809	4.0	U	4.0
Vanadium, Dissolved	7440-62-2	26	809	U	809	809	U	809	4.0	U	4.0
Zinc	7440-66-6	2000	**10000000**		23400	**10100000**		23400	24.4	J	5.8
Zinc, Dissolved	7440-66-6	2000	**10900000**		23400	**9720000**		23400	113		5.8
WATER BY 7470A											
Mercury	7439-97-6	2	0.16	U	0.16	0.16	U	0.16	0.16	U	0.16
Mercury, Dissolved	7439-97-6	2	0.16	U	0.16	0.16	U	0.16	0.16	U	0.16

NR: Not Analyzed
Highlighted Concentrations shown in bold type face exceed limits
J : Result is less than the RL but greater than or equal to the MDL and the concentration is an approximate value.
U : Indicates the analyte was analyzed for but not detected.

NVF_SBW14_MW			NVF_SBW11_MW			NVF_SBW16_MW			NVF_SBW04_MW			NVF_SBW06_MW		
460-59905-4			460-59905-5			460-59905-6			460-59905-7			460-59905-8		
07/18/2013 14:00:00			07/18/2013 15:25:00			07/19/2013 07:40:00			07/19/2013 10:20:00			07/19/2013 11:50:00		
Water			Water			Water			Water			Water		
ug/l			ug/l			ug/l			ug/l			ug/l		
Result	Q	MDL	Result	Q	MDL	Result	Q	MDL	Result	Q	MDL	Result	Q	MDL
338		72.1	**2030**		721	72.1	U	72.1	7210	U	7210	**396**		72.1
72.1	U	72.1	721	U	721	72.1	U	72.1	7210	U	7210	72.1	U	72.1
7.4	U	7.4	73.5	U	73.5	7.4	U	7.4	735	U	735	7.4	U	7.4
7.4	U	7.4	73.5	U	73.5	7.4	U	7.4	735	U	735	7.4	U	7.4
3.7	U	3.7	37.3	U	37.3	3.7	U	3.7	373	U	373	3.7	U	3.7
3.7	U	3.7	37.3	U	37.3	3.7	U	3.7	373	U	373	3.7	U	3.7
118	J	5.9	**294**	J	59.4	48.8	J	5.9	594	U	594	96.0	J	5.9
117	J	5.9	**285**	J	59.4	48.3	J	5.9	594	U	594	95.6	J	5.9
0.78	U	0.78	7.8	U	7.8	0.78	U	0.78	77.6	U	77.6	0.78	U	0.78
0.78	U	0.78	7.8	U	7.8	0.78	U	0.78	77.6	U	77.6	0.78	U	0.78
0.82	U	0.82	**23.9**	J	8.2	0.82	U	0.82	81.8	U	81.8	0.82	U	0.82
0.82	U	0.82	**21.9**	J	8.2	0.82	U	0.82	81.8	U	81.8	0.82	U	0.82
85200		305	289000		3050	72000		305	71700	J	30500	32000		305
87400		305	294000		3050	73900		305	70900	J	30500	32500		305
4.5	U	4.5	44.6	U	44.6	4.5	U	4.5	446	U	446	4.5	U	4.5
4.5	U	4.5	44.6	U	44.6	4.5	U	4.5	446	U	446	4.5	U	4.5
4.3	U	4.3	42.7	U	42.7	4.3	U	4.3	427	U	427	4.4	J	4.3
4.3	U	4.3	42.7	U	42.7	4.3	U	4.3	427	U	427	4.7	J	4.3
7.8	U	7.8	125	J	78.4	7.8	U	7.8	784	U	784	7.8	U	7.8
7.8	U	7.8	78.4	U	78.4	7.8	U	7.8	784	U	784	7.8	U	7.8
527		73.6	**17900**		736	73.6	U	73.6	**17500**		7360	**738**		73.6
73.6	U	73.6	**15200**		736	73.6	U	73.6	**17400**		7360	**364**		73.6
4.0	U	4.0	**60.2**		40.1	4.0	U	4.0	401	U	401	4.0	U	4.0
4.0	U	4.0	40.1	U	40.1	4.0	U	4.0	401	U	401	4.0	U	4.0
30700		321	45000	J	3210	25500		321	51600	J	32100	8990		321
30500		321	45200	J	3210	26400		321	51700	J	32100	9030		321
60.4		4.3	**2460**		43.0	48.5		4.3	**1730**		430	**352**		4.3
58.9		4.3	**2470**		43.0	45.4		4.3	**1700**		430	**361**		4.3
5.0	U	5.0	**155**	J	49.8	5.0	U	5.0	498	U	498	13.3	J	5.0
5.0	U	5.0	**154**	J	49.8	5.0	U	5.0	498	U	498	13.7	J	5.0
7320		525	20200	J	5250	3880	J	525	52500	U	52500	4730	J	525
7410		525	22200	J	5250	4000	J	525	52500	U	52500	4720	J	525
5.8	U	5.8	57.6	U	57.6	5.8	U	5.8	576	U	576	5.8	U	5.8
5.8	U	5.8	57.6	U	57.6	5.8	U	5.8	576	U	576	5.8	U	5.8
1.3	U	1.3	13.4	U	13.4	1.3	U	1.3	134	U	134	1.3	U	1.3
1.3	U	1.3	13.4	U	13.4	1.3	U	1.3	134	U	134	1.3	U	1.3
20000		821	85900		8210	8030		821	82100	U	82100	45500		821

20600		821	95600		8210	8180		821	82100	U	82100	45800		821
5.2	U	5.2	52.5	U	52.5	5.2	U	5.2	525	U	525	5.2	U	5.2
5.2	U	5.2	52.5	U	52.5	5.2	U	5.2	525	U	525	5.2	U	5.2
4.0	U	4.0	40.4	U	40.4	4.0	U	4.0	404	U	404	4.0	U	4.0
4.0	U	4.0	40.4	U	40.4	4.0	U	4.0	404	U	404	4.0	U	4.0
1490		5.8	**638000**		1170	382		5.8	**2200000**		5850	**38200**		117
637		5.8	**699000**		1170	31.0		5.8	**2290000**		5850	**40500**		117

0.16	U	0.16	0.16	U	0.16	0.16	U	0.16	0.16	U	0.16	0.16	U	0.16
0.16	U	0.16	0.16	U	0.16	0.16	U	0.16	0.16	U	0.16	0.16	U	0.16

NVF_FB01_071813		
460-59905-9		
07/18/2013 13:50:00		
Water		
ug/l		
Result	Q	MDL
72.1	U	72.1
NR		
7.4	U	7.4
NR		
3.7	U	3.7
NR		
5.9	U	5.9
NR		
0.78	U	0.78
NR		
0.82	U	0.82
NR		
305	U	305
NR		
4.5	U	4.5
NR		
4.3	U	4.3
NR		
7.8	U	7.8
NR		
73.6	U	73.6
NR		
4.0	U	4.0
NR		
321	U	321
NR		
4.3	U	4.3
NR		
5.0	U	5.0
NR		
525	U	525
NR		
5.8	U	5.8
NR		
1.3	U	1.3
NR		
821	U	821

NR		
5.2	U	5.2
NR		
4.0	U	4.0
NR		
5.8	U	5.8
NR		

0.16	U	0.16
NR		

APPENDIX B

STATE OF DELAWARE
DEPARTMENT OF NATURAL RESOURCES AND ENVIRONMENTAL CONTROL
DIVISION OF PARKS AND RECREATION

EROSION & SEDIMENT CONTROL PLAN

NVF YORKLYN SITE (DE-0071)
YORKLYN, DELAWARE

FEBRUARY 2014

OWNERS CERTIFICATION:

"I, Harold Thomas, certify that all land clearing, construction and development shall be done pursuant to the approved plan."

2/12/14
OWNER/DEVELOPER SIGNATURE DATE

Harold Thomas Member Auburn Village LLC
OWNER/DEVELOPER NAME AND TITLE (PRINTED)

"I, Matthew P. Chessar, certify that all land clearing, construction and development shall be done pursuant to the approved plan."

2/14/14
OWNER/DEVELOPER SIGNATURE DATE

Matthew P. Chessar, Env. Program Administrator, DNREC
OWNER/DEVELOPER NAME AND TITLE (PRINTED)

DESIGNERS CERTIFICATION:

"I hereby certify that, to the best of my knowledge, information, and belief, this plan has been designed in accordance with the current Delaware Erosion and Sediment Control Handbook and the Delaware Sediment and Stormwater Regulations.

2/12/14
DESIGNER SIGNATURE DATE

MICHAEL NAUGHTER-PROJ MANAGER DE/14123
DESIGNER NAME AND TITLE (PRINTED) P.E. STATE/NUMBER

SITE DATA

Owners: Parcel # 0700900027, 0800100022
State of Delaware
89 Kings Highways, Dover, DE 19901
(302) 739-9231

Parcel #s 0800400148, 0800100023, 0800100024, 0800400270
Auburn Village LLC
3200 Lancaster Pike Wilmington, DE 19805

Parcel # 0800400267
JGR LLC
3200 Lancaster Avenue Wilmington, DE 19805

Land Developer: DNREC, Parks and Recreation

Engineer/Consultant: Black & Veatch

Applicant: DNREC, Parks and Recreation

Names of adjacent property owners: See Plan

Total limit of disturbance: (Retain Parcel) 14.78 acres

Existing topography and survey features have been provided by DNREC Division of Parks and Recreation (April 2010). The data was generated by Duffield Associates and the US Army Corps of Engineers, Philadelphia District.

Map Projection: NAD83 Delaware State Planes, US Foot –Horizontal.
NAVD88 – Vertical

Wetlands and streams have been delineated by AD Marble (June, 2010).

100 Year floodplain referenced from the FEMA delineated data and Duffield Associates "Red Clay Creek H&H Modeling" Report Dated Dec. 2, 2008.

Soils data referenced from the NRCS Soil Survey database.

Project Benchmark: 2146 / 187.1
N: 583200.6330
E: 657181.3710

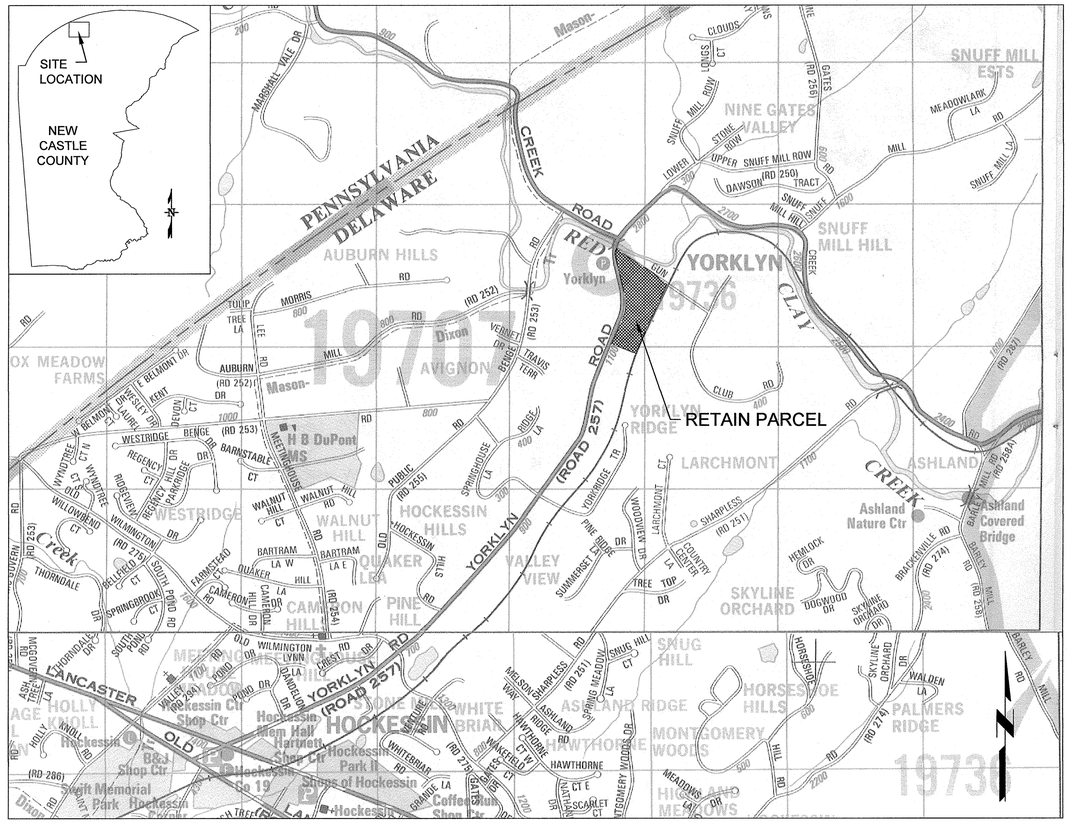

NEW CASTLE COUNTY ADC MAP
#1 AND #6 (12TH EDITION)

0' 1000' 3000'
SCALE: 1" – 1000'

INDEX OF SHEETS

ES-100	E&S LEGEND AND GENERAL NOTES
ES-110	EXISTING PARCEL OWNERSHIP MAP
ES-120	EXISTING CONDTIONS
ES-130	EROSION AND SEDIMENT CONTROL PLAN – BUILDING DEMOLITION
ES-131	EROSION AND SEDIMENT CONTROL PLAN – GUN CLUB ROAD PHASE 1
ES-132	EROSION AND SEDIMENT CONTROL PLAN – GUN CLUB ROAD PHASE 2
ES-133	EROSION AND SEDIMENT CONTROL PLAN – WETLANDS
ES-150	E&S CONSTRUCTION DETAILS 1
ES-151	E&S CONSTRUCTION DETAILS 2
ES-152	E&S CONSTRUCTION DETAILS 3
ES-153	E&S CONSTRUCTION DETAILS 4
ES-154	E&S CONSTRUCTION DETAILS 5
ES-155	E&S CONSTRUCTION DETAILS 6
C-100	CIVIL LEGEND AND GENERAL NOTES
C-101	PROJECT KEY PLAN
C-102	EXISTING SITE SURVEY
C-103	CONSTRUCTION LIMITS
C-104	DEMOLITION PLAN
C-110	ENTRANCE SITE LAYOUT
C-111	GUN CLUB ROAD SITE LAYOUT
C-115	ENTRANCE UTILITY PLAN
C-116	GUN CLUB ROAD UTILITY PLAN
C-120	ENTRANCE GRADING PLAN
C-121	GUN CLUB ROAD GRADING PLAN
C-130	ENTRANCE SIGNING AND STRIPING PLAN
C-131	GUN CLUB ROAD SIGNING AND STRIPING PLAN
C-135	PERMANENT EROSION AND SEDIMENT CONTROL PLAN
C-140	GUN CLUB ROAD PROFILE AND CROSS SECTIONS
C-141	DRAINAGE PROFILES
C-142	ENTRANCE CROSS SECTIONS
C-150	CONSTRUCTION DETAILS SHEET 1
C-151	CONSTRUCTION DETAILS SHEET 2
C-152	CONSTRUCTION DETAILS SHEET 3
C-153	CONSTRUCTION DETAILS SHEET 4
C-154	CONSTRUCTION DETAILS SHEET 5
C-155	CONSTRUCTION DETAILS SHEET 6
C-156	CONSTRUCTION DETAILS SHEET 7
C-157	CONSTRUCTION DETAILS SHEET 8
C-158	CONSTRUCTION DETAILS SHEET 9
T-101	ENTRANCE MAINTENANCE OF TRAFFIC PLAN
T-102	GUN CLUB ROAD MAINTENANCE OF TRAFFIC PLAN TEMPORARY ACCESS ROAD
T-103	GUN CLUB ROAD MAINTENANCE OF TRAFFIC PLAN PHASE 1
T-104	GUN CLUB ROAD MAINTENANCE OF TRAFFIC PLAN PHASE 2
T-105	NORTHBOUND YORKLYN ROAD MAINTENANCE OF TRAFFIC PLAN
T-106	SOUTHBOUND YORKLYN ROAD MAINTENANCE OF TRAFFIC PLAN
T-107	GUN CLUB ROAD MAINTENANCE OF TRAFFIC PLAN SEQUENCE OF CONSTRUCTION
T-108	MAINTENANCE OF TRAFFIC DETAILS

State of Delaware DNREC
Sediment and Stormwater Management Plan
No.: 2011-012, Ext #1
By: Randall K. Khan
Title: E.H.
Original Approval Date: 2/25/11
Extension Date: 2/21/14
Expiration Date: 2/21/17

BLACK & VEATCH
Building a world of difference.®

BLACK & VEATCH
Federal Services Div.
200 BELLEVUE PARKWAY, SUITE 215
WILMINGTON, DELAWARE
PHONE: (302) 798-0200 FAX: (302) 798-0201
WEBSITE: WWW.BV.COM

MICHAEL J. NAUGHTER
No. 14123
PROFESSIONAL ENGINEER
DELAWARE

Rev.	Description	Date	Apr.
1	Renewed E&S Permit	2/12/14	
2	---	---	---
3	---	---	---
4	---	---	---
5	---	---	---
6	---	---	---
7	---	---	---
8	---	---	---

Date: 02/12/2014 | Drawn by: NJS | Check by: GEH
Project #: 042403 | Design by: GEH | Review by: MJN

STATE OF DELAWARE
DEPARTMENT OF NATURAL RESOURCES AND ENVIRONMENTAL CONTROL
DIVISION OF PARKS AND RECREATION & AUBURN VILLAGE LLC
NVF PROPERTIES
NVF YORKLYN SITE (DE-0071) YORKLYN, DELAWARE
EROSION AND SEDIMENT CONTROL PLAN

COVER SHEET

DRAWING NO.
COVER

BELLEVUE STATE PARK, AUBURN HEIGHTS PRESERVE, NVF PROPERTIES, PROJECT NO.

CIVIL LEGEND

	EXISTING	PROPOSED
GATE		
FENCE		
GUARDRAIL		
RAILROAD		
SIGN		
SIGN – MULTI		
LIGHT POLE		
POLE		
METAL COVER		
SHRUB / TREE / BRUSH		
STREAM		
OVERHEAD PIPE	OE OE OE	
UTILITY POLE		
GAS LINE	GAS	
HYDROCHLORIC ACID LINE	HCL HCL	
SANITARY SEWER FORCE MAIN	FM	
STORM CULVERT		
WATER LINE	W	
ZINC – RECYCLE	ZN ZN	
VALVE	V	
CONCRETE DRAIN		
CATCH BASIN		
MANHOLE	MH	
MAJOR CONTOUR LINE	1100	1100
MINOR CONTOUR LINE		
BUILDINGS		
STANDARD ASPHALT		
PERVIOUS PAVEMENT		
UNPAVED ROAD/PARKING		
EXISTING ASPHALT TO BE STRIPED		
ROADWAY STATIONING		10+00 11+00
PROPERTY LINE		
CONSTRUCTION LIMITS		LOD LOD
ROADWAY CENTERLINE		
ROADWAY RIGHT OF WAY	R/W	R/W
ROADWAY EASEMENT		
ORANGE BARRIER FENCE		
SUPER SILT FENCE		SSF
SILT FENCE		SF
STABILIZED CONSTRUCTION ENTRANCE		SCE
STONE CHECK DAM		SCD
COFFERDAM		CD
DEWATERING BAG		GB
INLET PROTECTION		IP-1
RIPRAP STILLING BASIN		RSB
RIPRAP		

SEQUENCE OF CONSTRUCTION:

BUILDING DEMOLITION PHASE

1. Notify DNREC, Sediment and Stormwater Program, in writing, a minimum of 5 days before any land disturbing activity and to schedule a pre–construction meeting.
2. Contact Miss Utility prior to any site work. Additionally the contractor shall employ a professional utility locator to field locate existing utilities, many of which are privately owned.
3. Clearing and grubbing for those areas necessary for installation of perimeter controls.
4. Constructions of all perimeter controls: includes super silt fence, stabilized construction entrances, stone check dams, and turbidity curtains in the tributary.
5. Stone check dams installed along the edge of the building foundation shall remain in place during the entire project if the contractor is accessing the Site from the Yorklyn Road stabilized construction entrance.
6. Remaining clearing and grubbing (if necessary).
7. Prepare buildings for demolitions (remove electric, water, and sewer). All demolished materials shall be removed from the Site and legally disposed of.
8. Demolish designated buildings down to their existing foundations. Buildings that will remain have been marked.
9. Contractor shall stay within the designated limit of disturbance.
10. There is now proposed grading for this project.
11. Temporary and Permanent stabilization measures shall be used on all disturbed areas. Refer to Sheets ES–154 and ES–155 for details on Topsoiling, Mulching, and Vegetative Stabilization.
12. Removal of sediment control practices with approval from DNREC following final site inspection.

GUN CLUB ROAD PHASE

1. Notify DNREC, Sediment and Stormwater Program, in writing a minimum of 5 days before any land disturbing activity and to schedule a pre–construction meeting.
2. Contact Delaware Miss Utility prior to any site work. Additionally the contractor shall employ a professional utility locator to field locate existing utilities, many of which are privately owned.
3. Clearing and grubbing for those areas necessary for installation of perimeter controls.
4. Construction of perimeter controls: Includes super silt fence, stabilized construction entrance as shown.
5. Remaining clearing and grubbing
6. Prepare site for demolition: Remove electric, water, and sewer
7. Demolition and removal of all items within the LOD, except for the areas within the banks of the tributary where disturbance will take place. Materials should be hauled offsite per local regulations.
8. Construct cofferdams 1A and 1B prior to demolition and installation of culverts (existing and proposed 48" culverts). Installation of geotextile dewatering bag 1 and riprap stilling basin 1.

a. Install the modified cofferdams per Detail 2 on ES–152 upstream and downstream of culvert construction area, and a pump system to divert base flow (capacity 29,500gpm minimum) around cofferdam 1A towards the riprap stilling basin 1.

b. Contractor shall use an approved geotextile dewatering bag.

c. Cofferdam 1A, 1B, Geotextile dewatering bag 1 and riprap stilling basin 1 can be removed once all disturbed areas within the tributary work area have been stabilized in accordance with the approved plan.

d. Contractor shall modify cofferdam and pump system by construction means and methods to protect the construction area.

e. Location and sequencing of the cofferdams can be changed with the approval of the Engineer.

9. Super silt fence location will be modified with the installation of the two 48 inch culverts. See Sheet ES–132 for layout.
10. Install storm drains and catch basins.
11. Install inlet protection at the catch basins. Place rip–rap per plan specifications.
12. Grading for Gun Club Road.
13. Construction of Gun Club Road: Porous pavement, curbs, curb cuts, underdrains.
14. Once the existing Gun Club road bridge has been prepared for demolition, install cofferdams 2A and 2B per detail 2 on ES–152, pump system (capacity 29,500gpm), stilling basin 2 and geotextile dewatering bag 2.

a. Remove existing bridge

b. Grading for proposed tributary

c. Cofferdam 2A, 2B, Geotextile dewatering bag 2 and riprap stilling basin 2 can be removed once all disturbed areas within the tributary work area have been stabilized in accordance with the approved plan.

d. Contractor shall modify cofferdam and pump system by construction means and methods to protect the construction area.

e. Location and sequencing of the cofferdams can be changed with the approval of the Engineer.

f. Refer to Maintenance of Traffic details for construction phasing.

15. Final Grading.
16. Install landscaping and site stabilization.
17. Remove all erosion and sediment controls after receiving final approval for DNREC, Sediment and Stormwater.

WETLANDS PHASE

1. Notify DNREC, Sediment and Stormwater Program, in writing a minimum of 5 days before any land disturbing activity and to schedule a pre–construction meeting.
2. Contact Delaware Miss Utility prior to any site work. Additionally the contractor shall employ professional utility locator to field locate existing utilities, many of which are privately owned.
3. Clearing and grubbing for those areas necessary for installation of perimeter controls.
4. Construction of perimeter controls: Includes super silt fence, stabilized construction entrance, and inlet protection where required.
5. Remaining clearing and grubbing
6. Prepare remainder of site for demolition
7. Remove remainder of the existing building foundation.
8. Grade parking areas, paths and sidewalks.
9. Install all parking areas, paths and sidewalks.
10. Excavate wetlands and final grading for the remainder of the site.
11. Install silt fence around the wetland.
12. Final site stabilization.
13. Remove all erosion and sediment controls after receiving final approval for DNREC, Sediment and Storm water.

GENERAL NOTES:

1. Delaware Department of Natural Resources and Environmental Control's (DNREC) sediment and stormwater management program must be notified in writing five (5) days prior to commencing with construction . failure to do so constitutes a violation of the approved sediment and stormwater management plan.
2. Review and/or approval of the sediment and stormwater management plan shall not relieve the contractor from his or her responsibilities for compliance with the requirements of the sediment and stormwater regulations, nor shall it relieve the contractor from errors or omissions in the approved plan.
3. If the approved plan needs to be modified, additional sediment and stormwater control measures may be required as deemed necessary by the Delaware Department of Natural Resources and Environmental Control (DNREC).
4. Following soil disturbance or redisturbance, permanent or temporary stabilization shall be completed fourteen (14) calendar days as to the surface of all perimeter sediment controls, soil stockpiles, and all other disurbed or graded areas on the project site.
5. Maintenance and repair of all erosion, sediment control and stormwater management practices during construction shall be the responsibility of the contractor.
6. Follow pollution prevention plan see sheet ES–155 for details.
7. Failure to complete and maintain all erosion and sediment control measures will result in the issuance of a stop work order until such items are installed.
8. All demolished and excavated materials will be hauled off site per local regulations.
9. All erosion and sediment control measures will be carefully maintained throughout construction.
10. DNREC, Parks and Recreation shall provide a certified construction reviewer (CCR) and CCR inspection reports certified by an engineer licensed in the state of Delaware, in accordance with the program.

BLACK & VEATCH
Federal Services Div.
200 BELLEVUE PARKWAY, SUITE 216
WILMINGTON, DELAWARE
PHONE: (302) 798-0200 FAX: (302) 798-0201
WEBSITE: WWW.BV.COM

Rev.	Description	Date
1	Renewed E&S Permit	2/12/14
2		
3		
4		
5		
6		
7		
8		

Date: 02/12/2014 | Drawn by: NJS | Check by: GEH
Project #: 042403 | Design by: GEH | Review by: MJN

STATE OF DELAWARE
DEPARTMENT OF NATURAL RESOURCES AND ENVIRONMENTAL CONTROL
DIVISION OF PARKS AND RECREATION & AUBURN VILLAGE LLC

NVF PROPERTIES
NVF YORKLYN SITE (DE-0071) YORKLYN, DELAWARE

EROSION AND SEDIMENT CONTROL PLAN

E&S LEGEND AND GENERAL NOTES

DRAWING NO.
ES-100

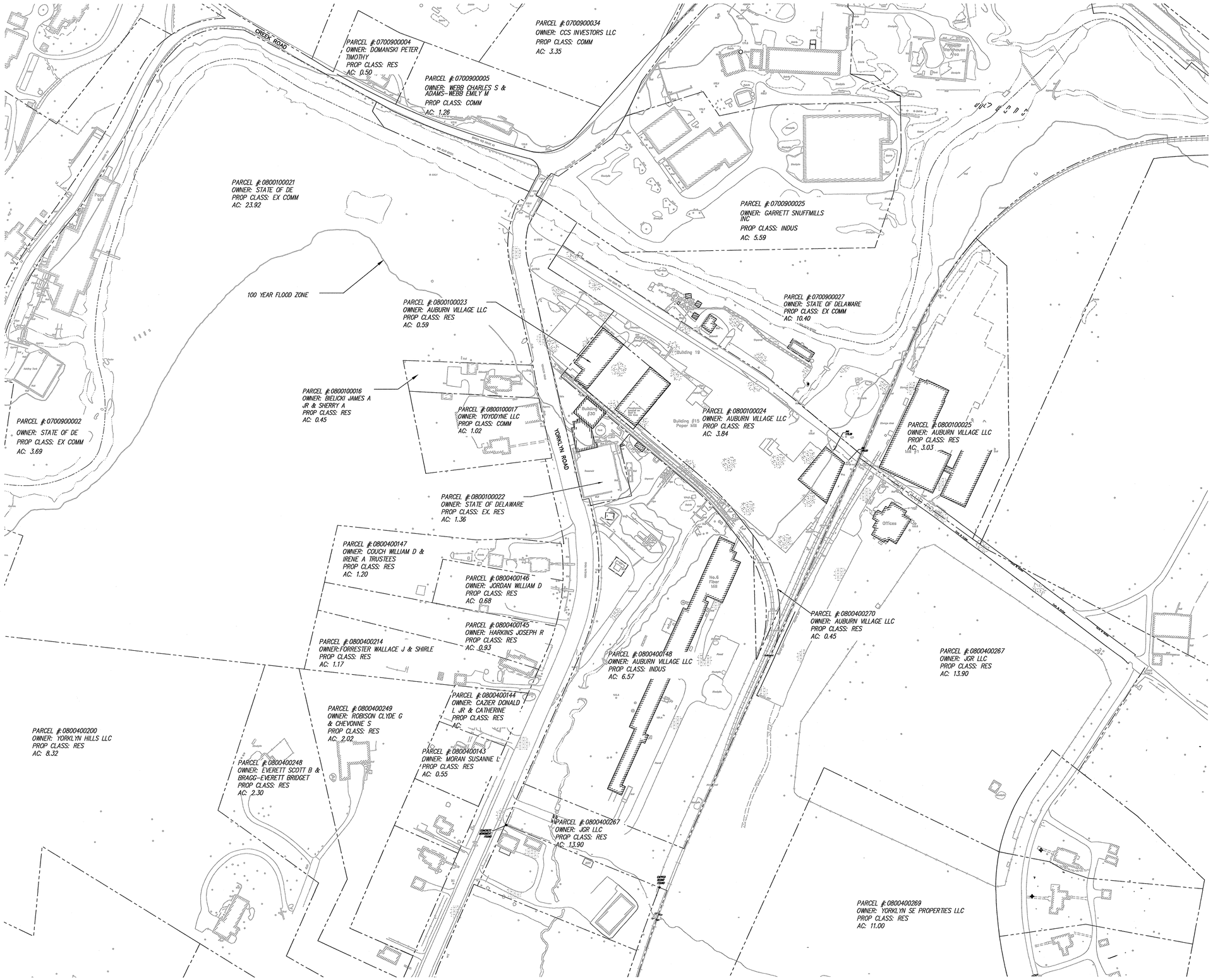

NOTES:

1. SEE SHEET ES–100 FOR CIVIL LEGEND AND GENERAL NOTES.
2. SEE SHEET ES–110 FOR PARCEL OWNERSHIP MAP
3. SEE SHEETS ES–130 TO ES–133 FOR EROSION AND SEDIMENT CONTROL PLAN
4. SEE SHEETS ES–150 TO ES–155 FOR DETAILS
5. BUILDING DEMOLITION REPRESENTS EXISTING CONDITIONS PRIOR TO THE CONSTRUCTION OF GUN CLUB ROAD.
6. SEE SHEET ES–155 FOR SITE POLLUTION PREVENTION AND DUST CONTROL DETAILS.
7. SEE SHEETS ES–154 AND ES–155 FOR VEGETATIVE STABILIZATION, MULCHING AND TOP SOILING DETAILS

BLACK & VEATCH
Federal Services Div.
200 BELLEVUE PARKWAY, SUITE 216
WILMINGTON, DELAWARE
PHONE: (302) 798-0200 FAX: (302) 798-0201
WEBSITE: WWW.BV.COM

Rev.	Description	Date	Apr.
1	Reviewed E&S Permit	2/12/14	---
2	---	---	---
3	---	---	---
4	---	---	---
5	---	---	---
6	---	---	---
7	---	---	---
8	---	---	---

Date: 02/12/2014	Drawn by: NJS	Check by: GEH	
Project #: 042403	Design by: GEH	Review by: MJN	

STATE OF DELAWARE
DEPARTMENT OF NATURAL RESOURCES AND ENVIRONMENTAL CONTROL
DIVISION OF PARKS AND RECREATION & AUBURN VILLAGE LLC

NVF PROPERTIES
NVF YORKLYN SITE (DE-0071) YORKLYN, DELAWARE

EROSION AND SEDIMENT CONTROL PLAN

EXISTING PARCEL OWNERSHIP MAP

DRAWING NO.
ES-110

Stream Bank Locations		
Point	Easting	Northing
WUS1-44	583089.377	658686.499
WUS1-45	583112.838	658676.272
WUS1-46	583141.146	658664.076
WUS1-47	583178.117	658644.643
WUS1-48	583212.642	658627.849
WUS1-49	583246.937	658609.775
WUS1-5	582374.886	658310.888
WUS1-50	583301.617	658594.218
WUS1-51	583332.316	658572.809
WUS1-52	583372.837	658553.146
WUS1-53	583417.419	658526.737
WUS1-54	583463.410	658500.641
WUS1-55	583492.516	658484.489
WUS1-56	583513.779	658476.799
WUS1-57	583527.055	658468.867
WUS1-58	583556.360	658455.604
WUS1-59	583598.826	658448.123
WUS1-6	582375.947	658324.237
WUS1-60	583615.709	658449.939
WUS1-61	583652.704	658430.801
WUS1-62	583674.099	658421.059
WUS1-63	583692.584	658410.806
WUS1-64	583733.015	658393.049
WUS1-65	583765.537	658384.484
WUS1-66	583795.589	658367.372
WUS1-67	583819.997	658355.160
WUS1-68	583833.679	658347.709
WUS1-69	583870.749	658326.689
WUSI-7	582376.544	658331.741
WUS1-70	583896.107	658320.603
WUS1-71	583943.634	658300.832
WUS1-72	583981.419	658286.659
WUS1-73	583998.601	658279.154
WUS1-74	584014.766	658275.989
WUS1-75	584045.792	658270.069
WUS1-76	584060.457	658266.238
WUS1-77	584075.151	658262.565
WUS1-78	584097.148	658259.567
WUS1-79	584135.762	658279.994
WUS1-8	582378.782	658371.491
WUS1-80	584147.510	658295.402
WUS1-81	584164.200	658324.009
WUS1-82	584187.760	658368.702
WUS1-83	584202.163	658400.102
WUS1-84	584215.106	658433.717
WUS1-85	584222.411	658467.192
WUS1-86	584219.210	658497.289
WUS1-87	584214.980	658527.353
WUS1-88	584220.150	658551.549
WUS1-89	584220.521	658574.816
WUS1-9	582381.703	658379.178
WUS1-90	584221.478	658591.550
WUS1-91	584225.946	658613.051
WUS1-92	584231.573	658629.766
WUS1-93	584251.899	658682.627
WUS1-94	584263.603	658715.324
WUS1-95	584277.741	658724.445
WUS1-96	584296.295	658734.488
WUS1-97	584311.333	658741.168
WUS1-98	584323.799	658749.776

Stream Bank Locations		
Point	Easting	Northing
WUS6-1	584008.315	658270.199
WUS6-10	583903.297	658129.242
WUS6-10A	583723.010	657920.455
WUS6-10A-A	583712.154	657929.006
WUS6-10A-B	583705.163	657921.282
WUS6-11	583876.898	658091.913
WUS6-11A	583713.995	657914.094
WUS6-12	583846.998	658064.718
WUS6-12A	583705.152	657903.329
WUS6-13	583841.833	658053.622
WUS6-13A	583698.712	657894.685
WUS6-14	583754.646	657939.723
WUS6-14A	583683.338	657882.056
WUS6-15	583724.819	657903.311
WUS6-15A	583677.543	657873.596
WUS6-16	583715.713	657887.806
WUS6-16A	583665.275	657853.373
WUS6-17	583689.664	657877.792
WUS6-17A	583660.003	657840.894
WUS6-18	583685.340	657871.129
WUS6-18A	583657.471	657831.884
WUS6-19	583671.462	657850.308
WUS6-19A	583653.217	657825.202
WUS6-1A	584000.388	658276.153
WUS6-2	584004.544	658261.894
WUS6-20	583669.739	657840.911
WUS6-20A	583646.017	657804.518
WUS6-21	583661.446	657825.675
WUS6-21A	583633.950	657789.610
WUS6-22	583654.145	657803.316
WUS6-22A	583621.176	657771.263
WUS6-23	583644.591	657792.411
WUS6-23A	583613.985	657754.458
WUS6-24	583630.074	657770.419
WUS6-24A	583602.530	657740.354
WUS6-25	583611.513	657735.562
WUS6-25A	583581.216	657711.407
WUS6-26	583592.031	657708.939
WUS6-26A	583549.156	657672.159
WUS6-27	583570.759	657680.791
WUS6-27A	583526.274	657635.198
WUS6-28	583552.416	657660.909
WUS6-28A	583515.467	657625.477
WUS6-29	583545.916	657638.874
WUS6-29A	583488.180	657603.304
WUS6-2A	583994.916	658264.679
WUS6-3	583990.902	658239.264
WUS6-30	583526.176	657620.151
WUS6-30A	583481.724	657585.596
WUS6-31	583518.596	657608.669
WUS6-31A	583472.670	657576.871
WUS6-32	583507.451	657603.463
WUS6-32A	583458.749	657567.853
WUS6-33	583495.600	657589.307
WUS6-33A	583437.915	657541.612
WUS6-34	583490.382	657577.857
WUS6-34A	583433.839	657501.239
WUS6-35	583479.831	657565.518
WUS6-35A	583443.160	657494.833
WUS6-36	583462.523	657557.541
WUS6-36A	583438.483	657489.167
WUS6-37	583451.495	657551.905
WUS6-9A	583748.960	657943.546

Stream Bank Locations		
Point	Easting	Northing
WUS9-1	583905.780	658129.881
WUS9-2	583922.637	658119.654
WUS9-3	584000.696	658053.845
WUS9-4	584031.173	658031.143

Wetland Point Locations		
Point	Easting	Northing
W5-1	583690.712	657840.721
W6-1	583678.145	657811.472
W7-1	583669.200	657796.238
W8-1	583652.908	657785.191
W9-1	583388.856	657184.580
W9-2	583385.950	657218.317
W9-3	583448.059	657202.908
W9-4	583492.836	657192.273
W9-5	583505.673	657181.641
W9-6	583526.364	657163.988
W9-7	583541.626	657135.737
W9-8	583559.081	657120.566

0' 60' 120' 180'

SCALE: 1" = 60'

BLACK & VEATCH
Federal Services Div.
200 BELLEVUE PARKWAY, SUITE 215
WILMINGTON, DELAWARE
PHONE: (302) 798-0200 FAX: (302) 798-0201
WEBSITE: WWW.BV.COM

Date: 02/12/2014	Drawn by: NJS	Check by: GEH	8	---
Project #: 042403	Design by: GEH	Review by: MJN	7	---
			6	---
			5	---
			4	---
			3	---
			2	---
			1	Reviewed E&S Permit
			Rev.	Description

2/12/14	---
---	---
---	---
---	---
---	---
---	---
---	---
---	---
Date	Apr.

STATE OF DELAWARE
DEPARTMENT OF NATURAL RESOURCES AND ENVIRONMENTAL CONTROL
DIVISION OF PARKS AND RECREATION & AUBURN VILLAGE LLC

NVF PROPERTIES
NVF YORKLYN SITE (DE-0071) YORKLYN, DELAWARE

EROSION AND SEDIMENT CONTROL PLAN

EXISTING CONDITIONS

DRAWING NO.
ES-120

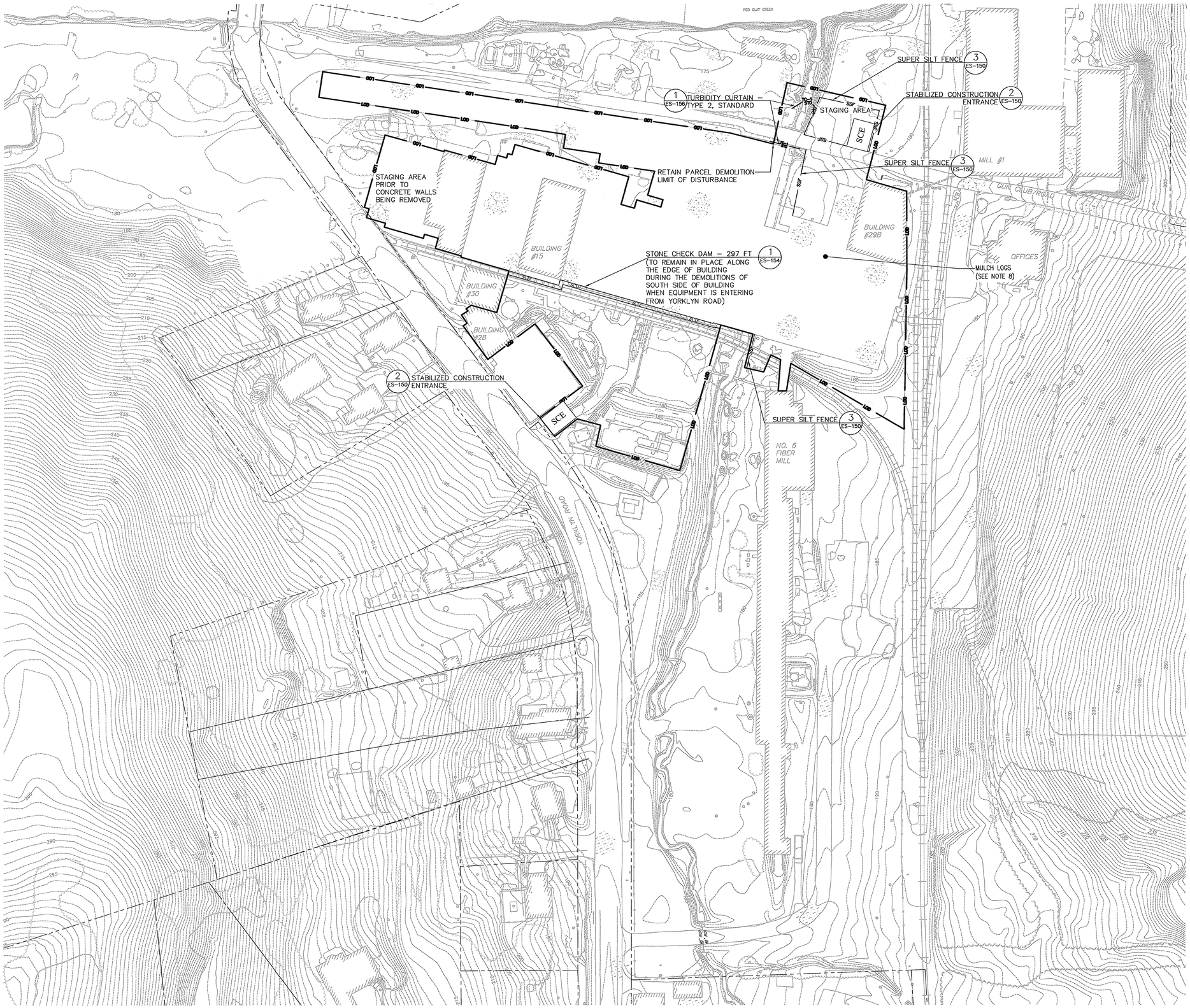

NOTES:

1. SEE SHEET ES–100 FOR CIVIL LEGEND AND GENERAL NOTES.
2. SEE SHEET ES–110 FOR PARCEL OWNERSHIP MAP
3. SEE SHEETS ES–130 TO ES–133 FOR EROSION AND SEDIMENT CONTROL PLAN
4. SEE SHEETS ES–150 TO ES–155 FOR DETAILS
5. BUILDING DEMOLITION REPRESENTS EXISTING CONDITIONS PRIOR TO THE CONSTRUCTION OF GUN CLUB ROAD.
6. SEE SHEET ES–155 FOR SITE POLLUTION PREVENTION AND DUST CONTROL DETAILS.
7. SEE SHEETS ES–154 AND ES–155 FOR VEGETATIVE STABILIZATION, MULCHING AND TOP SOILING DETAILS
8. MAINTAIN PRESENTLY INSTALLED 12" MULCH LOGS WITHIN LOD

0' 60' 120' 180'
SCALE: 1" – 60'

BLACK & VEATCH
Federal Services Div.
200 BELLEVUE PARKWAY, SUITE 215
WILMINGTON, DELAWARE
PHONE: (302) 798-0200 FAX: (302) 798-0201
WEBSITE: WWW.BV.COM

Rev.	Description	Date	Apr.
1	Renewed E&S Permit	2/12/14	
2			
3			
4			
5			
6			
7			
8			

Date: 02/12/2014 | Drawn by: NJS | Check by: GEH
Project #: 042403 | Design by: GEH | Review by: MJN

STATE OF DELAWARE
DEPARTMENT OF NATURAL RESOURCES AND ENVIRONMENTAL CONTROL
DIVISION OF PARKS AND RECREATION & AUBURN VILLAGE LLC

NVF PROPERTIES
NVF YORKLYN SITE (DE-0071) YORKLYN, DELAWARE

EROSION AND SEDIMENT CONTROL PLAN

EROSION AND SEDIMENT CONTROL PLAN
BUILDING DEMOLITION

DRAWING NO.
ES-130

NOTES:

1. SEE SHEET ES–100 FOR CIVIL LEGEND AND GENERAL NOTES.
2. SEE SHEET ES–110 FOR PARCEL OWNERSHIP MAP
3. SEE SHEETS ES–130 TO ES–133 FOR EROSION AND SEDIMENT CONTROL PLAN
4. SEE SHEETS ES–150 TO ES–155 FOR DETAILS
5. BUILDING DEMOLITION REPRESENTS EXISTING CONDITIONS PRIOR TO THE CONSTRUCTION OF GUN CLUB ROAD.
6. SEE SHEET ES–155 FOR SITE POLLUTION PREVENTION AND DUST CONTROL DETAILS.
7. SEE SHEETS ES–154 AND ES–155 FOR VEGETATIVE STABILIZATION, MULCHING AND TOP SOILING DETAILS
8. SUPER SILT FENCE THAT LAYS OVER EXISTING FOUNDATION TO BE CONSTRUCTED AFTER DEMOLITION OF FOUNDATION
9. MAINTAIN PRESENTLY INSTALLED 12" MULCH LOGS WITHIN LOD

0' 60' 120' 180'
SCALE: 1" – 60'

BLACK & VEATCH
Federal Services Div.
500 BELLEVUE PARKWAY, SUITE 215
WILMINGTON, DELAWARE
PHONE: (302) 798-0200 FAX: (302) 798-0201
WEBSITE: WWW.BV.COM

Rev.	Description	Date	Apr.
8	---	---	---
7	---	---	---
6	---	---	---
5	---	---	---
4	---	---	---
3	---	---	---
2	---	---	---
1	Renewed E&S Permit	2/12/14	---

Date: 02/12/2014
Drawn by: NJS
Check by: GEH
Project #: 042403
Design by: GEH
Review by: MJN

STATE OF DELAWARE
DEPARTMENT OF NATURAL RESOURCES AND ENVIRONMENTAL CONTROL
DIVISION OF PARKS AND RECREATION & AUBURN VILLAGE LLC

NVF PROPERTIES
NVF YORKLYN SITE (DE-0071) YORKLYN, DELAWARE

EROSION AND SEDIMENT CONTROL PLAN

EROSION AND SEDIMENT CONTROL PLAN
GUN CLUB ROAD
PHASE 1

DRAWING NO.
ES-131

NOTES:

1. SEE SHEET ES–100 FOR CIVIL LEGEND AND GENERAL NOTES.
2. SEE SHEET ES–110 FOR PARCEL OWNERSHIP MAP
3. SEE SHEETS ES–130 TO ES–133 FOR EROSION AND SEDIMENT CONTROL PLAN
4. SEE SHEETS ES–150 TO ES–155 FOR DETAILS
5. BUILDING DEMOLITION REPRESENTS EXISTING CONDITIONS PRIOR TO THE CONSTRUCTION OF GUN CLUB ROAD.
6. SEE SHEET ES–155 FOR SITE POLLUTION PREVENTION AND DUST CONTROL DETAILS
7. SEE SHEETS ES–154 AND ES–155 FOR VEGETATIVE STABILIZATION, MULCHING AND TOP SOILING DETAILS
8. INLET PROTECTION MAY BE REMOVED AFTER ALL AREAS DRAINING TO THE CATCH BASINS HAVE BEEN STABILIZED

BLACK & VEATCH
Federal Services Div.
200 BELLEVUE PARKWAY, SUITE 215
WILMINGTON, DELAWARE
PHONE: (302) 798-0200 FAX: (302) 798-0201
WEBSITE: WWW.BV.COM

Rev.	Description	Date	Apr.
8	–	–	–
7	–	–	–
6	–	–	–
5	–	–	–
4	–	–	–
3	–	–	–
2	–	–	–
1	Reviewed B&S Permit	2/12/14	–

Date: 02/12/2014	Drawn by: VJS	Check by: GEH	
Project #: 042403	Design by: GEH	Review by: MJN	

STATE OF DELAWARE
DEPARTMENT OF NATURAL RESOURCES AND ENVIRONMENTAL CONTROL
DIVISION OF PARKS AND RECREATION & AUBURN VILLAGE LLC

NVF PROPERTIES
NVF YORKLYN SITE (DE-0071) YORKLYN, DELAWARE

EROSION AND SEDIMENT CONTROL PLAN

EROSION AND SEDIMENT CONTROL PLAN
GUN CLUB ROAD
PHASE 2

DRAWING NO.
ES-132

NOTES:

1. SEE SHEET ES–100 FOR CIVIL LEGEND AND GENERAL NOTES.
2. SEE SHEET ES–110 FOR PARCEL OWNERSHIP MAP
3. SEE SHEETS ES–130 TO ES–133 FOR EROSION AND SEDIMENT CONTROL PLAN
4. SEE SHEETS ES–150 TO ES–155 FOR DETAILS
5. BUILDING DEMOLITION REPRESENTS EXISTING CONDITIONS PRIOR TO THE CONSTRUCTION OF GUN CLUB ROAD.
6. SEE SHEET ES–155 FOR SITE POLLUTION PREVENTION AND DUST CONTROL DETAILS.
7. SEE SHEETS ES–154 AND ES–155 FOR VEGETATIVE STABILIZATION, MULCHING AND TOP SOILING DETAILS
8. INLET PROTECTION MAY BE REMOVED AFTER ALL AREAS DRAINING TO THE CATCH BASINS HAVE BEEN STABILIZED

0' 60' 120' 180'
SCALE: 1" – 60'

BLACK & VEATCH
Federal Services Div.
200 BELLEFUE PARKWAY, SUITE 216
WILMINGTON, DELAWARE
PHONE: (302) 798-0200 FAX: (302) 798-0201
WEBSITE: WWW.BV.COM

Rev.	Description	Date	Apr.
1	Renewed E&S Permit	2/12/14	---
2	---	---	---
3	---	---	---
4	---	---	---
5	---	---	---
6	---	---	---
7	---	---	---
8	---	---	---

Date: 02/12/2014 | Drawn by: NJS | Check by: GEH
Project #: 042403 | Design by: GEH | Review by: MJN

STATE OF DELAWARE
DEPARTMENT OF NATURAL RESOURCES AND ENVIRONMENTAL CONTROL
DIVISION OF PARKS AND RECREATION & AUBURN VILLAGE LLC

NVF PROPERTIES
NVF YORKLYN SITE (DE-0071) YORKLYN, DELAWARE

EROSION AND SEDIMENT CONTROL PLAN

EROSION AND SEDIMENT CONTROL PLAN WETLANDS

DRAWING NO.
ES-133

Standard Detail & Specifications
Silt Fence

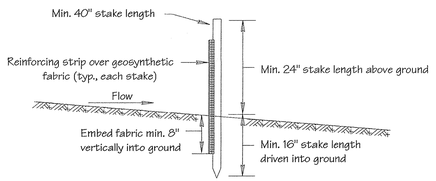

Section

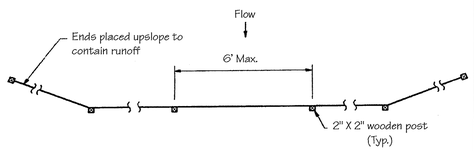

Plan

DATA
Max. controlled slope

Source:	Symbol:	Detail No.
Adapted form MD Stds. & Specs. for ESC	SF	DE-ESC-3.1.2.1 Sheet 1 of 2 Date: 6/05

Standard Detail & Specifications
Silt Fence

Construction Detail

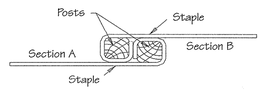

Top

Method for joining continuous sections

Construction Notes:

1. Geosynthetic fabric to be fastened securely to fence posts with wire ties or staples.
2. When two sections of filter cloth adjoin each other they shall be overlapped by six inches and folded.
3. Maintenance shall be performed as needed and material removed when "bulges" develop in the silt fence.

Materials:

1. Stakes: Steel (either T or U) or 2" x 2" hardwood
2. Geosynthetic Fabric: Type GD-I
3. Reinforcing strip: Wooden lath, plastic strip or other approved equivalent
4. Prefabricated Unit: Geofab, Envirofence, or approved equivalent

Source:	Symbol:	Detail No.
Adapted from MD Stds. & Specs. for ESC	SF	DE-ESC-3.1.2.1 Sheet 2 of 2 Date: 6/05

1 ES-150 SILT FENCE
N.T.S.

Standard Detail & Specifications
Stabilized Construct. Entrance

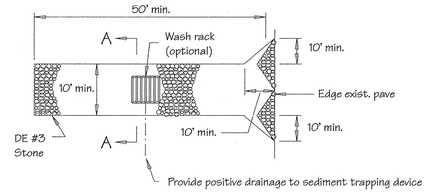

Plan

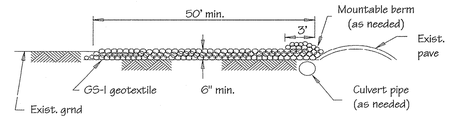

Profile

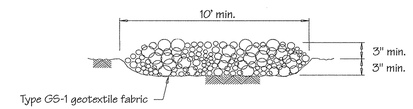

Section A-A (Std.)

Source:	Symbol:	Detail No.
Adapted from VA ESC Handbook	SCE	DE-ESC-3.4.7 Sheet 1 of 2 Date: 12/03

Standard Detail & Specifications
Stabilized Construct. Entrance

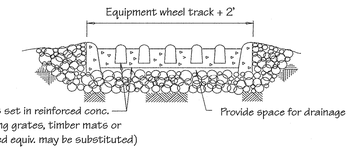

Section A-A (Opt.)

Construction Notes:

1. Stone size - Use DE #3 stone.
2. Length - As required, but not less than 50 feet (except on a single residence lot where a 30 foot minimum length would apply).
3. Thickness - Not less than size (6) inches.
4. Width - Ten (10) foot minimum, but not less than the full width at points where ingress or egress occurs.
5. Geotextile - Type GS-I; placed over the entire area prior to placing of stone.
6. Surface Water - All surface water flowing or diverted toward construction entrances shall be piped across the entrance. If piping is impractical, a mountable berm with 5:1 slopes will be permitted.
7. Maintenance - The entrance shall be maintained in a condition which will prevent tracking or flowing of sediment onto public rights-of-way. This may require periodic top dressing with additional stone as conditions demand and repair and/or cleanout of any measures used to trap sediment. All sediment spilled, dropped, washed or tracked onto public rights-of-way must be removed immediately.
8. Washing - Vehicle wheels shall be cleaned to remove sediment prior to entrance onto public rights-of-way. When washing is required, it shall be done on an area stabilized with stone and which drains into an approved sediment trapping device.
9. Inspection - Periodic inspection and needed maintenance shall be provided after each rain.

Source:	Symbol:	Detail No.
Adapted from VA ESC Handbook	SCE	DE-ESC-3.4.7 Sheet 2 of 2 Date: 12/03

2 ES-150 STABILIZED CONSTRUCTION ENTRANCE
N.T.S.

Standard Detail & Specifications
Super Silt Fence

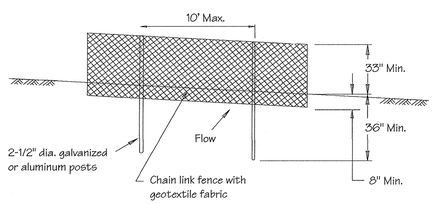

Perspective

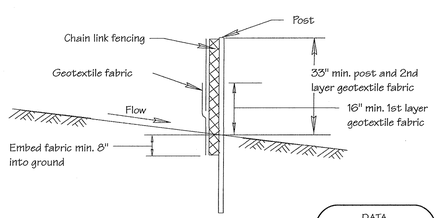

Section

DATA
Max. controlled slope

Source:	Symbol:	Detail No.
Adapted from MD Stds. & Specs. for ESC	SSF	DE-ESC-3.1.2.3 Sheet 1 of 2 Date: 12/03

Standard Detail & Specifications
Super Silt Fence

Construction Notes:

1. The poles do not need to be set in concrete.
2. Chain link fence shall be fastened securely to the fence posts with wire ties or staples.
3. Geotextile fabric shall be fastened securely to the chain link fence with ties spaced every 24" at the top and mid section.
4. Geotextile fabric shall be embedded a minimum of 8" into the ground.
5. When two sections of geotextile fabric adjoin each other, they shall be overlapped by 6" and folded.
6. Maintenance shall be performed as needed and silt buildups removed when "bulges" develop in the silt fence.

Materials:

1. Fencing: Fencing shall be 42 inches in height and constructed in accordance with the latest Delaware Department of Transportation (Del-DOT) Specifications for Chain Link Fencing (Section 728). The Del-DOT specification for a 6 foot fence shall be used, substituting 42 inch fabric and 6 foot length posts.
2. Geosynthetic Fabric: Type GD-I

Source:	Symbol:	Detail No.
Adapted from MD Stds. & Specs. for ESC	SSF	DE-ESC-3.1.2.3 Sheet 2 of 2 Date: 12/03

3 ES-150 SUPER SILT FENCE
N.T.S.

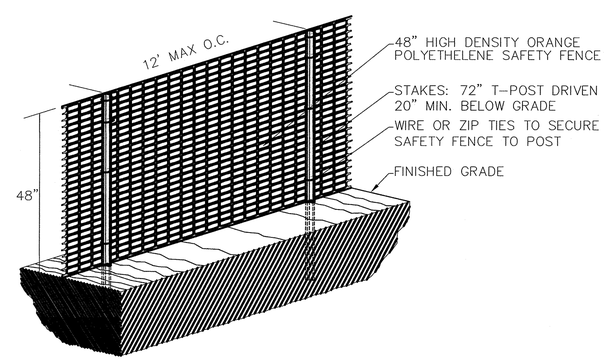

1. ALL SENSITIVE AREAS SHALL BE PROTECTED AS PER PLAN.
2. ALL TREES IN THE CONSTRUCTION AREA NOT SPECIFICALLY DESIGNATED FOR REMOVAL SHALL BE PRESERVED AND PROTECTED WITH HIGH VISIBILITY FENCE AS PER PLAN.
3. WHEN PRACTICABLE, INSTALL HIGH VISIBILITY 3 FEET OUTSIDE OF THE DRIP LINE OF THE TREE.
4. SAFETY FENCE SHOULD BE FASTENED SECURELY TO THE T-POSTS.
5. THE FENCING MUST REMAIN IN PLACE DURING ALL PHASES OF CONSTRUCTION; ANY CHANGE OF THE PROTECTIVE FENCING MUST BE APPROVED.

4 ES-150 ORANGE BARRIER FENCE
N.T.S.

BLACK & VEATCH
Federal Services Div.
200 BELLEVUE PARKWAY, SUITE 815
WILMINGTON, DELAWARE
PHONE: (302) 798-0200 FAX: (302) 798-0201
WEBSITE: WWW.BV.COM

Date	Description	Rev.
2/12/14	Renewed E&S Permit	1
---	---	2
---	---	3
---	---	4
---	---	5
---	---	6
---	---	7
---	---	8

Date: 02/12/2014 | Drawn by: NJS | Check by: GEH
Project #: 042403 | Design by: GEH | Review by: KJN

STATE OF DELAWARE
DEPARTMENT OF NATURAL RESOURCES AND ENVIRONMENTAL CONTROL
DIVISION OF PARKS AND RECREATION & AUBURN VILLAGE LLC

NVF PROPERTIES
NVF YORKLYN SITE (DE-0071) YORKLYN, DELAWARE

EROSION AND SEDIMENT CONTROL PLAN

E&S CONSTRUCTION DETAILS
SHEET 1

DRAWING NO.
ES-150

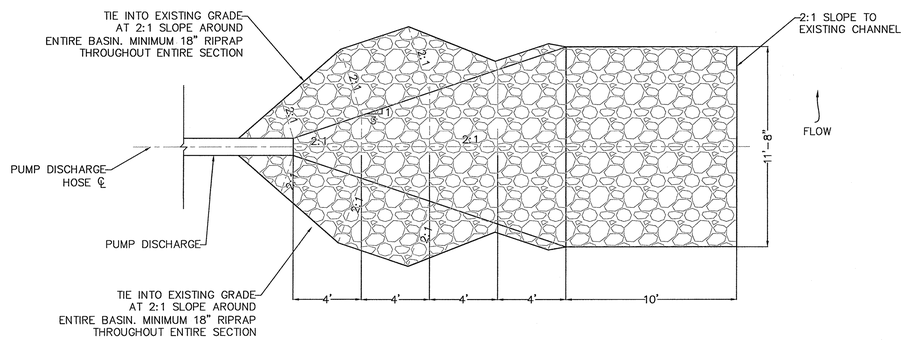

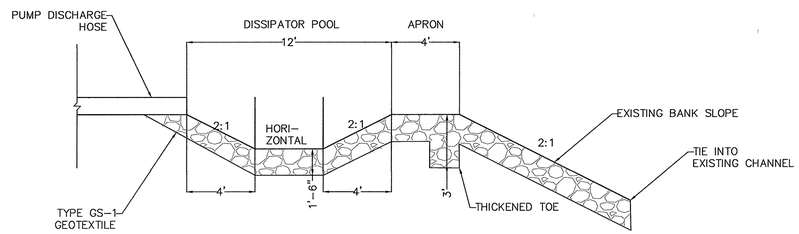

Standard Detail & Specifications
Riprap Stilling Basin

DELAWARE EROSION & SEDIMENT CONTROL HANDBOOK

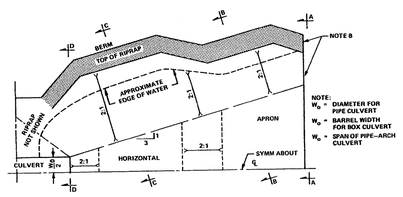

Half - Plan

NOTE A – IF EXIT VELOCITY OF BASIN IS SPECIFIED, EXTEND BASIN AS REQUIRED TO OBTAIN SUFFICIENT CROSS-SECTIONAL AREA AT SECTION A-A SUCH THAT Q_{des}/CROSS SECTION AREA AT SEC. A-A) = SPECIFIED EXIT VELOCITY.

NOTE B – WARP BASIN TO CONFORM TO NATURAL STREAM CHANNEL. TOP OF RIPRAP IN FLOOR OF BASIN SHOULD BE AT THE SAME ELEVATION OR LOWER THAN NATURAL CHANNEL BOTTOM AT SEC. A-A.

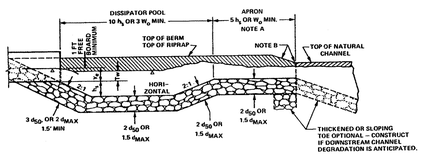

Profile thru ℄ Basin

Source:	Symbol:	Detail No.
Adapted from FHWA HEC-14	RSB	DE-ESC-3.3.11 Sheet 1 of 3 Date: 12/03

Standard Detail & Specifications
Riprap Stilling Basin

DELAWARE EROSION & SEDIMENT CONTROL HANDBOOK

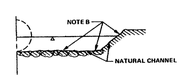

Section A-A

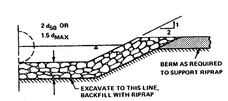

Section B-B

NOTE B – WARP BASIN TO CONFORM TO NATURAL STREAM CHANNEL. TOP OF RIPRAP IN FLOOR OF BASIN SHOULD BE AT THE SAME ELEVATION OR LOWER THAN NATURAL CHANNEL BOTTOM AT SEC. A-A.

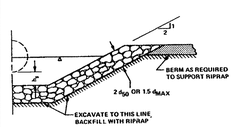

Section C-C

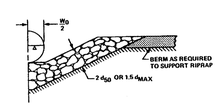

SectionD-D

DATA

Culvert dimension (w_o)
Depth of basin from culvert invert (h_o)
Riprap size (R No.)

Source:	Symbol:	Detail No.
Adapted from FHWA HEC-14	RSB	DE-ESC-3.3.11 Sheet 2 of 3 Date: 12/03

Standard Detail & Specifications
Riprap Stilling Basin

DELAWARE EROSION & SEDIMENT CONTROL HANDBOOK

Construction Notes:

1. The subgrade for the riprap shall be prepared to the required lines and grades as shown on the plan. Any fill required in the subgrade shall be compacted to a density of approximately that of the surrounding undisturbed material.
2. The riprap shall conform to the grading limits as shown on the plan.
3. Geotextile shall be a Type GS-I. Fabric shall be protected from punching, cutting or tearing. Any damage other than an occasional small hole shall be repaired by placing another piece of cloth over the damaged area. All connecting joints should overlap a minimum of 1 ft. If the damage is extensive, replace the entire section.
4. Stone for the riprap or gabion outlets may be placed by equipment. Riprap shall be placed in a manner to prevent damage to the geotextile fabric. Hand placement will be required to the extent necessary to prevent damage to the conduits, structures, etc.

Source:	Symbol:	Detail No.
Adapted from FHWA HEC-14	RSB	DE-ESC-3.3.11 Sheet 3 of 3 Date: 12/03

1 / ES-151 RIPRAP STILLING BASIN
N.T.S.

BLACK & VEATCH
Federal Services Div.
200 BELLEVUE PARKWAY, SUITE 215
WILMINGTON, DELAWARE
PHONE: (302) 798-0200 FAX: (302) 798-0201
WEBSITE: WWW.BV.COM

Rev.	Description	Date	Apr.
1	Received E&S Permit	2/12/14	---
2	---	---	---
3	---	---	---
4	---	---	---
5	---	---	---
6	---	---	---
7	---	---	---
8	---	---	---

Date: 02/12/2014 | Drawn by: NJS | Check by: GEH
Project #: 042403 | Design by: GEH | Review by: MJN

STATE OF DELAWARE
DEPARTMENT OF NATURAL RESOURCES AND ENVIRONMENTAL CONTROL
DIVISION OF PARKS AND RECREATION & AUBURN VILLAGE LLC

NVF PROPERTIES
NVF YORKLYN SITE (DE-0071) YORKLYN, DELAWARE

EROSION AND SEDIMENT CONTROL PLAN

E&S CONSTRUCTION DETAILS
SHEET 2

DRAWING NO.
ES-151

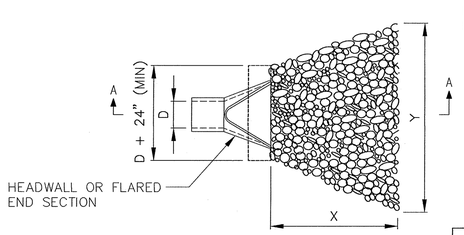

PLAN VIEW

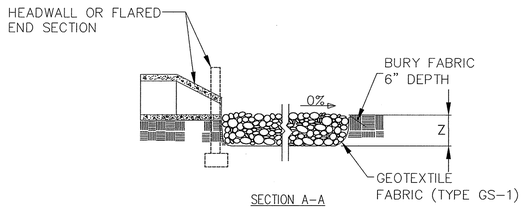

SECTION A–A

Pipe	Pipe Diameter (inches)	NSA* Number	D50** (inches)	Dmin (inches)	Dmax (inches)	X (ft)	Y (ft)	Z (inches)
Storm Drain Line 01	19 X 30	R–5	9	5	18	22	22	22
Storm Drain Line 02	24 X 38	R–5	9	5	18	22	22	22
Culvert 01	2–48	R–6	12	7	24	34	32	36

NOTES

1. RIPRAP TO BE PLACED PRIOR TO PLACING PIPE.
2. PLACE DELAWARE #3 STONE UNDER PIPE.
3. TOP OF RIPRAP SHALL NOT BE HIGHER THAN PIPE INVERT.

* National Stone Association
** 50% of pieces, by weight, should be larger than this size.
Dimensions may vary depending upon equipment availability.

1 ES–152 RIPRAP
N.T.S.

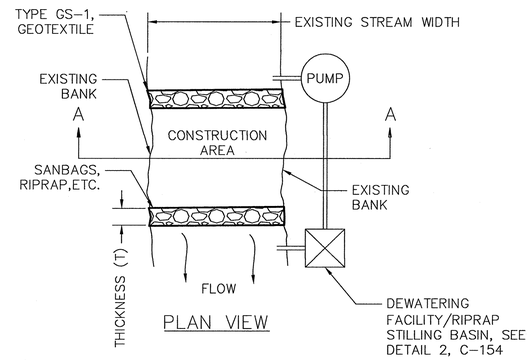

PLAN VIEW

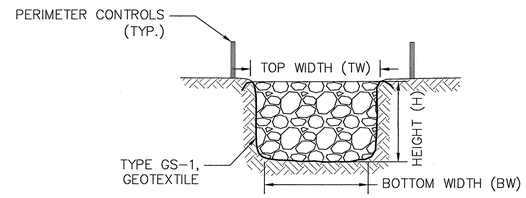

SECTION A–A

NOTES:
DETAIL MODIFIED FROM VA ESC HANDBOOK, DETAIL DE–ESC–3.5.2.2

CONSTRUCTION NOTES:

1. CONSTRUCTION SHALL BE PERFORMED DURING LOW FLOW CONDITIONS.
2. CONTROLS FOR APPROACH AREAS SHALL BE PROVIDED IN ACCORDANCE WITH THE APPROVED PLAN.
3. LARGE ROCKS, WOODY VEGETATION, OR OTHER MATERIAL IN THE STREAMBED AND BANKS WHICH MAY PRECLUDE PROPER INSTALLATION OF THE COFFERDAM MATERIALS AND/OR IMPEDE THE PROPOSED CONSTRUCTION SHALL BE REMOVED.
4. COFFERDAM SHALL BE FORMED BY PLACING RIPRAP, SANDBAGS, SHEET METAL OR WOOD PLANKS AROUND THE PROPOSED WORK AREA. HEIGHT OF THE COFFERDAM SHALL BE ADEQUATE TO KEEP WATER FROM OVERTOPPING THE DAM AND FLOODING THE WORK AREA.
5. WATER IN THE WORK AREA SHALL BE PUMPED TO AN APPROVED DEWATERING PRACTICE.
6. ONCE ADEQUATELY DEWATERED, IN–STREAM CONSTRUCTION MAY BEGIN.
7. EROSION AND SEDIMENT CONTROL COFFERDAMS ARE DESIGN FOR TRIBUTARY BASE FLOW AND UP TO THE 2" STORM EVENT. CONTRACTOR SHALL USE THE APPROPRIATE CONSTRUCTION MEANS AND METHODS TO PROTECT THE CONSTRUCTION AREA IF A LARGER STORM EVENT OCCURS.

COFFERDAM DIMENSION TABLE				
NAME	TW (FT)	BW (FT)	H (FT)	T (FT)
1A	24	6	4	1 MIN.
1B	32	8	3.5	1 MIN.
2A	32	8	3.5	1 MIN.
2B	23	6	4	1 MIN.

*COFFERDAM NAMES ARE SHOWN ON SHEET ES–132

2 ES–152 MODIFIED COFFERDAM STREAM DIVERSION
N.T.S.

Standard Detail & Specifications
Geotextile Dewatering Bag

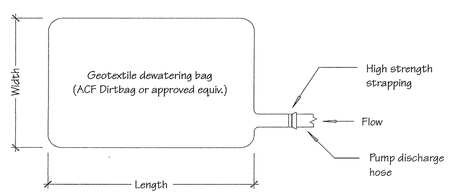

Plan

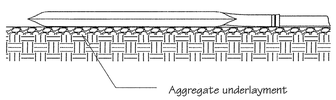

Profile

Source: Adapted from ACF Products, Inc.
Symbol: GB
Detail No. DE-ESC-3.2.1.2 Sheet 1 of 2
Date: 12/03

Standard Detail & Specifications
Geotextile Dewatering Bag

Construction Notes:

1. The dewatering bag should be placed so the incoming water flows into and through the bag, and then flow off the site without creating more erosion. The neck should be tied off tightly to stop the water from flowing out of the bag without going through the walls. The dewatering bag should be placed on a gravel bed to allow water to flow in all directions.
2. The dewatering bag is considered full and should be disposed when it is impractical for the bag to filter the sediment out at a reasonable flow rate. At this point, it should be replaced with a new bag.
3. Disposal may be accomplished as directed by the construction reviewer. If the site allows, the bag may be buried on site and seeded, visible fabric removed and seeded or removed from site to a proper disposal area.

Materials:

1. The geotextile fabric shall be a Type GD-IV.
2. The dewatering bag shall be sewn with a double needle machine using high strength thread. All structural seams will be sewn with high strength, double stitched "J" type. Seam strength test will have the following minimum average roll values:

Type	TEST METHOD	TEST RESULT
Heavy duty	ASTM D-4884	100 lb / in

3. The dewatering bag shall have an opening large enough to accommodate a four (4) inch discharge hose with attached strap to tie off the hose to prevent the pumped water from escaping from the bag without being filtered.

Source: Adapted from ACF Products, Inc.
Symbol: GB
Detail No. DE-ESC-3.2.1.2 Sheet 2 of 2
Date: 12/03

3 ES–152 GEOTEXTILE DEWATERING BAG
N.T.S.

Standard Detail & Specifications
Inlet Protection - Type 1

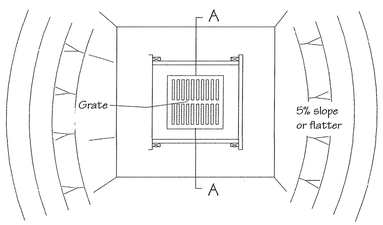

Plan

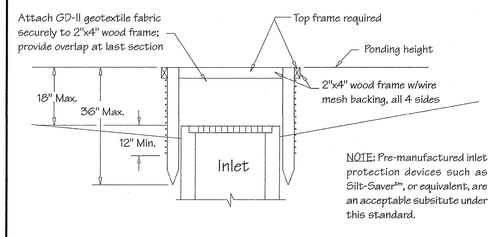

NOTE: Pre-manufactured inlet protection devices such as Silt-Saver™, or equivalent, are an acceptable subsitute under this standard.

Section A-A

Source: Adapted from Erosion Draw Manual J. McCullah & Assoc.
Symbol: IP-1
Detail No. DE-ESC-3.1.5.1 Sheet 1 of 2
Date: 12/03

Standard Detail & Specifications
Inlet Protection - Type 1

Construction Notes:

1. Excavate completely around inlet to a depth of 18" below grate elevation.
2. Drive 2" x 4" post 1' into ground at four corners of inlet. Place nail strips between posts on ends of inlet. Assemble top portion of 2" x 4" frame using overlap joint shown. Top of frame (weir) must be 6" below edge of roadway adjacent to inlet.
3. Stretch wire mesh tightly around frame and fasten securely. Ends must meet at post.
4. Stretch geotextile fabric tightly over wire mesh, the cloth must extend from top of frame to 18" below inlet grate elevation. Fasten securely to frame. Ends must meet at post, be overlapped and folded, then fastened down.
5. Backfill around inlet in compacted 6" layers until at least 12" of geotextile fabric is buried.
6. If the inlet is not in a low point, construct a compacted earth dike in the ditchline below it. The top of this dike is to be at least 6" higher than the top of frame (weir).
7. This structure must be inspected frequently and the filter fabric replaced when clogged.

Materials:

1. Wooden frame is to be constructed of 2" x 4" construction grade lumber.
2. Wire mesh must be of sufficient strength to support filter fabric with water fully impounded against it.
3. Geotextile fabric: Type GD-II

Source: Adapted. from Erosion Draw Manual J. McCullah & Assoc.
Symbol: IP-1
Detail No. DE-ESC-3.1.5.1 Sheet 2 of 2
Date: 12/03

4 ES–152 INLET PROTECTION – TYPE 1
N.T.S.

BLACK & VEATCH Federal Services Div.
300 BELLEVUE PARKWAY, SUITE 216
WILMINGTON, DELAWARE
PHONE: (302) 798-0300 FAX: (302) 798-0301
WEBSITE: WWW.BV.COM

Rev.	Description	Date	Apr.
1	Renewed E&S Permit	2/12/14	---
2	---	---	---
3	---	---	---
4	---	---	---
5	---	---	---
6	---	---	---
7	---	---	---
8	---	---	---

Date: 02/12/2014 | Drawn by: NJS | Check by: GEH
Project #: 042403 | Design by: GEH | Review by: MJN

STATE OF DELAWARE
DEPARTMENT OF NATURAL RESOURCES AND ENVIRONMENTAL CONTROL
DIVISION OF PARKS AND RECREATION & AUBURN VILLAGE LLC
NVF PROPERTIES
NVF YORKLYN SITE (DE-0071) YORKLYN, DELAWARE
EROSION AND SEDIMENT CONTROL PLAN

E&S CONSTRUCTION DETAILS
SHEET 3

DRAWING NO.
ES-152

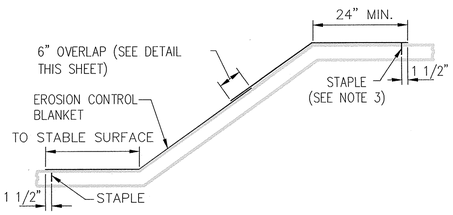

STABILIZATION OF EMBANKMENTS

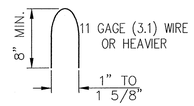

STAPLE DETAIL

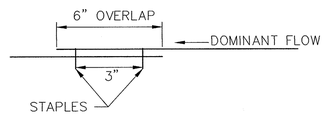

OVERLAP DETAIL

STAPLES TO BE STAGGERED AT 6" SPACING.

NOTES:
1. STAPLES TO BE STAGGERED AT 18" SPACING.
2. TOPSOIL UNDER EROSION CONTROL BLANKET IS TO BE TRACKED AND SEEDED.
3. WHEN OFFSITE RUNOFF OCCURS, ADDITIONAL MEASURES AS DIRECTED BY THE ENGINEER SHALL BE USED TO ENSURE STABILITY OF EMBANKMENT.

1 / ES-153 EROSION CONTROL BLANKET

NAG S75 OR APPROVED EQUIVALENT
DELAWARE CONSTRUCTION DETAILS SHEET E-9 (2005)
N.T.S.

COIR FIBER MATTING INSTALLATION

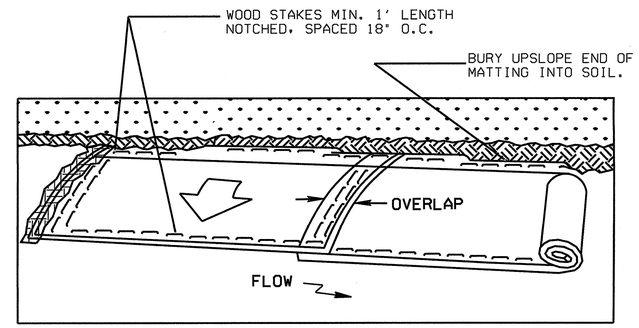

COIR FIBER MAT NOTES:

KEY-IN THE MATTING BY PLACING THE TOP ENDS OF THE MATTING IN A 6" TRENCH, 6" IN DEPTH. BACKFILL THE TRENCH AND TAMP FIRMLY TO CONFORM TO THE CHANNEL CROSS-SECTION. SECURE WITH A ROW OF STAKES ABOUT 1" DOWN SLOPE FROM THE TRENCH.

PLACE COIR FIBER MATTING AFTER THE SLOPE OR SWALE HAS BEEN DRESSED TO DEFINE THE FLOW AND THE DESIGNATED SEEDING, AND SOIL SUPPLEMENTS, HAVE BEEN APPLIED. PLACE COIR FIBER MATTING TO CONFORM TO THE SHAPE OF THE SOIL SURFACE.

SPREAD THE MAT EVENLY AND SMOOTHLY, WITHOUT STRETCHING, AND ENSURE CONTACT WITH SOIL AT ALL POINTS. UNROLL FABRIC PARALLEL TO THE FLOW DIRECTION. DRIVE ALL STAKES FLUSH WITH THE SOIL SURFACE.

6" OVERLAP OF MATTING WHERE TWO OR MORE STRIP WIDTHS ARE REQUIRED STAKE ON 18" CENTERS.

WHERE ONE ROLL OF MATTING ENDS AND ANOTHER BEGINS, THE END OF THE TOP STRIP SHALL OVERLAP THE UPPER END OF THE LOWER STRIP BY 6", SHIPLAP FASHION. REINFORCE THE OVERLAP WITH A DOUBLE ROW OF STAKES SPACED 6" APART IN A STAGGERED PATTERN ON EITHER SIDE.

TERMINATE MAT INSTALLATION BY TRENCHING UNDER AT LEAST 6" OF FABRIC AND STAKING SECURELY ALONG THE TRENCH.

LIVE WATTLE CONSTRUCTION DETAIL

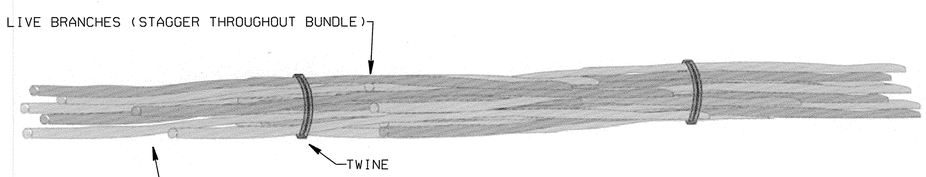

TYPICAL SLOPE TREATMENT

N.T.S.

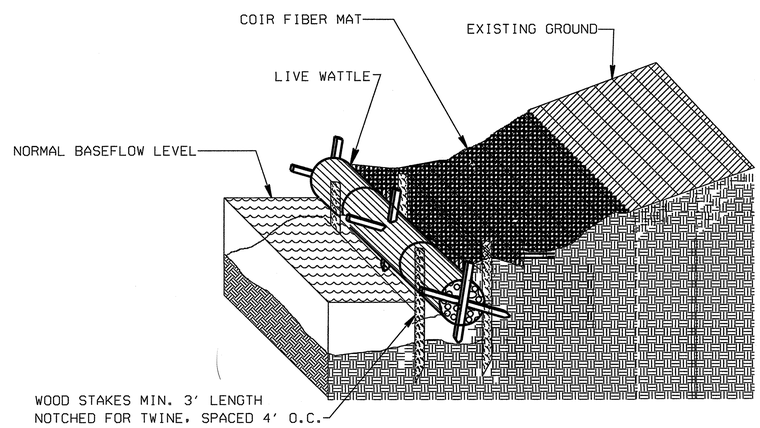

2 / ES-153 LIVE WATTLE CONSTRUCTION

BLACK WILLOW BUNDLES OR APPROVED EQUIVALENT
N.T.S.

3 / ES-153 COIR FIBER MATTING INSTALLATION AND TYPICAL SLOP TREATMENT FOR USE WITH LIVE WATTLE

CONTROL MAT OCR 30 OR APPROVED EQUIVALENT
N.T.S.

BLACK & VEATCH
Federal Services Div.
200 BELLEVUE PARKWAY, SUITE 215
WILMINGTON, DELAWARE
PHONE: (302) 798-0200 FAX: (302) 798-0201
WEBSITE: WWW.BV.COM

Rev.	Description	Date	Apr.
1	Removed E&S Permit	2/12/14	
2			
3			
4			
5			
6			
7			
8			

Date: 02/12/2014 | Drawn by: NJS | Check by: GEH
Project #: 042403 | Design by: GEH | Review by: MJN

STATE OF DELAWARE
DEPARTMENT OF NATURAL RESOURCES AND ENVIRONMENTAL CONTROL
DIVISION OF PARKS AND RECREATION & AUBURN VILLAGE LLC

NVF PROPERTIES
NVF YORKLYN SITE (DE-0071) YORKLYN, DELAWARE

EROSION AND SEDIMENT CONTROL PLAN

E&S CONSTRUCTION DETAILS
SHEET 4

DRAWING NO.
ES-153

Standard Detail & Specifications
Stone Check Dam

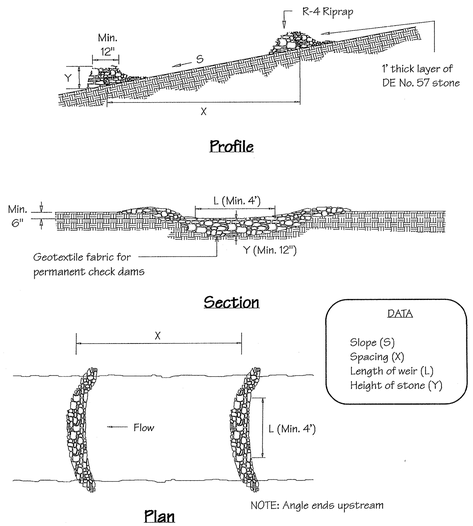

DATA
Slope (S)
Spacing (X)
Length of weir (L)
Height of stone (Y)

Source:	Symbol:	Detail No.
Adapted from MD Stds. & Specs. for ESC	SCD	DE-ESC-3.3.6 Sheet 1 of 2 Date: 6/05

Standard Detail & Specifications
Stone Check Dam

Construction Notes:

1. Swales and channels shall be prepared in accordance with the construction specifications described in the **Standards and Specifications for Temporary Berm**, **Temporary Swale**, **Vegetated Channel**, or **Diversions**.
2. The check dam shall be constructed of 4" to 8" riprap. The riprap shall be placed so that it completely covers the width of the channel.
3. The top of the check dam shall be constructed so that the center is approximately 6" lower than the outer edges, forming a weir that the water can flow across. The minimum length of weir shall be 4'.
4. The maximum height of the check dam at the center of the weir must not exceed two (2) feet.
5. Maximum spacing between dams should be the distance in the channel where the toe of the upstream dam is at the same elevation as the top of the downstream dam. (See **Standard & Specifications for Check Dams** for design chart.)

Source:	Symbol:	Detail No.
Adapted from MD Stds. & Specs. for ESC	SCD	DE-ESC-3.3.6 Sheet 2 of 2 Date: 6/05

1 ES-154 STONE CHECK DAM

Standard Detail & Specifications
Topsoiling

Construction Notes:

1. **Site Preparation** (Where Topsoil is to be added)

Note: When topsoiling, maintain needed erosion and sediment control practices such as diversions, grade stabilization structures, berms, dikes, waterways and sediment basins.

a. Grading - Grades on the areas to be topsoiled which have been previously established shall be maintained.

b. Liming - Where the topsoil is either highly acid or composed of heavy clays, ground limestone shall be spread at the rate of 4-8 tons/acre (200-400 pounds per 1,000 square feet). Lime shall be distributed uniformly over designated areas and worked into the soil in conjunction with tillage operations as described in the following procedures.

c. Tilling - After the areas to be topsoiled have been brought to grade, and immediately prior to dumping and spreading the topsoil, the subgrade shall be loosened by discing or by scarifying to a depth of a least 3 inches to permit bonding of the topsoil to the subsoil. Pack by passing a bulldozer up and down over the entire surface area of the slope to create horizontal erosion check slots to prevent topsoil from sliding down the slope.

2. **Topsoil Material and Application**

Note:Topsoil salvaged from the existing site may often be used but it should meet the same standards as set forth in these specifications. The depth of topsoil to be salvaged shall be no more than the depth described as a representative profile for that particular soil type as described in the soil survey published by USDA-SCS in cooperation with Delaware Agricultural Experimental Station.

Source:	Symbol:	Detail No.
USDA - NRCS		DE-ESC-3.4.1 Sheet 1 of 2 Date: 12/03

Standard Detail & Specifications
Topsoiling

Construction Notes (cont.)

a. Materials - Topsoil shall be a loam, sandy loam, clay loam, silt loam, sandy clay loam, loamy sand or other soil as approved by an agronomist or soil scientist. It shall not have a mixture of contrasting textured subsoil and contain no more than 5 percent by volume of cinders, stones, slag, coarse fragment, gravel, sticks, roots, trash or other extraneous materials larger than 1-1/2 inches in diameter. Topsoil must be free of plants or plant parts of bermudagrass, quackgrass, Johnsongrass, nutsedge, poison ivy, thistles, or others as specified. All topsoil shall be tested by a reputable laboratory for organic matter content, pH and soluble salts. A pH of 6.0 to 7.5 and an organic content of not less than 1.5 percent by weight is required. If pH value is less than 6.0 lime shall be applied and incorporated with the topsoil to adjust the pH to 6.5 or higher. Topsoil containing soluble salts greater than 500 parts per million shall not be used.

Note: No sod or seed shall be placed on soil which has been treated with soil sterilants or chemicals used for weed control until sufficient time has elapsed to permit dissipation of toxic materials.

b. Grading - The topsoil shall be uniformly distributed and compacted to a minimum of four (4) inches. Spreading shall be performed in such a manner that sodding or seeding can proceed with a minimum of additional soil preparation and tillage. Any irregularities in the surface resulting from topsoiling or other operations shall be corrected in order to prevent the formation of depressions or water pockets. Topsoil shall not be placed while in a frozen or muddy condition, when the subgrade is excessively wet, or in a condition that may otherwise be detrimental to proper grading and seedbed preparation.

Note:Topsoil substitutes or amendments as approved by a qualified agronomist or soil scientist, may be used in lieu of natural topsoil.

Source:	Symbol:	Detail No.
USDA - NRCS		DE-ESC-3.4.1 Sheet 2 of 2 Date: 12/03

2 ES-154 TOPSOILING

Standard Detail & Specifications
Vegetative Stabilization

TEMPORARY SEEDING BY RATES, DEPTHS AND DATES

Mix #	Species[4]	Seeding Rate		Optimum Seeding Dates [1] O = Optimum Planting Period; A = Acceptable Planting Period							Planting Depth[3]
				Coastal Plain			Piedmont			All	
	Certified Seed	lb/Ac[2]	lb/1000 sq.ft.	2/1-4/30	4/1-8/14	8/15-10/31	3/1-4/30	4/1-7/31	8/1-10/31	10/31-2/1	
1	Barley	125	4	O	A	O	O	A	O		1-2 inches 2-3" sandy soils
2	Oats	125	4	O	A	A	O	A	A		1-2 inches 2-3" sandy soils
3	Rye	125	4	O	A	O	O	A	O	A	1-2 inches 2-3" sandy soils
4	Perennial Ryegrass	125	4	O	A	O	O	A	O		0.5 inches 1-2" sandy soils
5	Annual Ryegrass	125	4	O	A	O	O	A	O	A	0.5 inches 1-2" sandy soils
6	Winter Wheat	125	4	O	A	O	O	A	O	A	1-2 inches 2-3" sandy soils
7	Foxtail Millet	30 PLS	0.7		O			O			0.5 inches 1-2" sandy soils
8	Pearl Millet	20 PLS	0.5		O			O			0.5 inches 1-2" sandy soils

1. Winter seeding requires 3 tons per acre of straw mulch for proper stabilization.
2. May be planted throughout summer if soil moisture is adequate or seeded area can be irrigated.
3. Applicable on slopes 3:1 or less.
4. Fifty pounds per acre of Annual Lespedeza may be added to 1/2 the seeding rate of any of the above species.
5. Use varieties currently recommended for Delaware. Contact a County Extension Office for information.
6. Warm season grasses such as Millet or Weeping Lovegrass may be used between 5/1 and 9/1 if desired. Seed at 3-5 lbs. per acre. Good on low fertility and acid areas. Seed after frost through summer at a depth of 0.5".

CONTRACTOR TO USE HIGHLIGHTED SEED

Source:	Symbol:	Detail No.
Delaware ESC Handbook		DE-ESC-3.4.3 Sheet 1 of 4 Date: 12/03

Standard Detail & Specifications
Vegetative Stabilization

PERMANENT SEEDING AND SEEDING DATES

Mix No.	Seeding Mixtures: Certified Seed[2]	Seeding Rate[3]		Optimum Seeding Dates [2] O = Optimum Planting Period A = Acceptable Planting Period							Remarks
				Coastal Plain			Piedmont			All[6]	
	Well Drained Soils	lb/Ac	lb/1000 sq.ft.	2/1-4/30	5/1-8/14	8/15-10/31	3/1-4/30	5/1-7/31	8/1-10/31	10/31-2/1	
1	Tall Fescue Weeping Lovegrass	140 10	3.2 0.23	A	O	A	A	O	A	Add 100 lbs./ac Winter Rye	Good erosion control mix Tolerant of low fertility soils Lovegrass very difficult to mow; Germinates only in hot weather
2	Deertongue Sheep Fescue Common Lespedeza[5] Inoculated	30 30 15	0.69 0.69 0.35	A	O	A	A	O	A	Add 100 lbs /ac Winter Rye	Good erosion control mix Tolerant of low fertility soils Good wildlife cover and food
3	Tall Fescue (Turf-type) or Strong Creeping Red Fescue or Perennial Ryegrass plus Flatpea[5]	50 50 50 15	1.15 1.15 1.15 0.34	O	A	O	O	A	O	Add 100 lbs./ac. Winter Rye	Good erosion control mix Tall Fescue for droughty conditions. Creeping Red Fescue for heavy shade. Flatpea to suppress woody vegetation.
4	Strong Creeping Red Fescue Kentucky Bluegrass Perennial Ryegrass or Redtop plus White Clover[5]	100 70 15 5 3	2.3 1.61 0.35 0.11 0.07	O	A	O	O	A	O	Add 100 lbs./ac. Winter Rye	Suitable waterway mix. Canada Bluegrass more drought tolerant. Use Redtop for increased drought tolerance.
5	Switchgrass[5,7] or Coastal Panicgrass Big Bluestem Little Bluestem Indian Grass	10 10 5 5 5	0.23 0.23 0.11 0.11 0.1		O			O			Native warm-season mixture. Tolerant of low fertility soils. Drought tolerant. Poor shade tolerance. N fertilizer discouraged - weeds
6	Tall Fescue (turf-type) (Blend of 3 cultivars)	150	3.5	O	A	O	O	A	O		Managed filter strip for nutrient uptake.
7	Tall Fescue Ky. Bluegrass (Blend) Perennial Ryegrass	150 20 20	3.5 0.46 0.46	O	A	O	O	A	O		Three cultivars of Kentucky Bluegrass. Traffic tolerant.
8	Big Bluestem[7] Indian Grass[7] Little Bluestem[7] Creeping Red Fescue plus one of: Partridge Pea Bush Clover Wild Indigo Showy Tick-Trefoil	10 10 8 30 5 3 3 2	0.23 0.23 0.18 0.69 0.11 0.07 0.07 0.05	O	A		O	A			All species are native. Indian Grass and Bluestem have fluffy seeds. Plant with a specialized native seed drill. Creeping Red Fescue will provide erosion protection while the warm season grasses get established.

Source:	Symbol:	Detail No.
Delaware ESC Handbook		DE-ESC-3.4.3 Sheet 2 of 4 Date: 12/03

Standard Detail & Specifications
Vegetative Stabilization

PERMANENT SEEDING AND SEEDING DATES (cont.)

Mix No.	Seeding Mixtures: Certified Seed[2]	Seeding Rate[3]		Optimum Seeding Dates [2] O = Optimum Planting Period A = Acceptable Planting Period							Remarks
				Coastal Plain			Piedmont			All[6]	
	Poorly Drained Soils	lb/Ac	lb/1000 sq.ft.	2/1-4/30	5/1-8/14	8/15-10/31	3/1-4/30	5/1-7/31	8/1-10/31	10/31-2/1	
9	Redtop Creeping Bentgrass Sheep Fescue Rough Bluegrass	75 35 30 45	1.72 0.8 0.69 1	O	A	O	O	A	O	Add 100 lbs./ac. Winter Rye	Quick stabilization of disturbed sites and waterways
10	Reed Canarygrass[8]	10	0.23	A		O	A		O		Good erosion control, wildlife cover and wetland revegetation.
	Residential Lawns										
11	Tall Fescue Perennial Ryegrass Kentucky Bluegrass Blend	100 25 30	2.3 0.57 0.69	O	A	O	O	A	O		High value, high maintenance, light traffic, irrigation necessary. Well drained soils, full sun.
12	Tall Fescue Perennial Ryegrass Sheep Fescue	100 25 25	2.3 0.57 0.57	O	A	O	O	A	O		Moderate value, low maintenance, traffic tolerant
13	Creeping Red Fescue Chewings Fescue Rough Bluegrass Kentucky Bluegrass	50 50 20 20	1.15 1.15 0.4 0.4	O	A	O	O	A	O		Shade tolerant, moderate traffic tolerance, moderate maintenance.
14	Creeping Red Fescue Rough Bluegrass or Chewings Fescue	50 90	1.15 2.1	O	A	O	O	A	O		Shade tolerant, moisture tolerant.
15	K-31 Tall Fescue	150	3.5	O	A	O	O	A	O		Monoculture, but performs well alone in lawns. Discouraged.

1. When hydroseeding is the chosen method of application, the total rate of seed should be increased by 25%.
2. Winter seeding requires 3 tons per acre of straw mulch. Planting dates listed above are average for Delaware. These dates may require adjustment to reflect local conditions.
3. All seed shall meet the minimum purity and minimum germination percentages recommended by the Delaware Department of Agriculture. The maximum % of weed seeds shall be in accordance with Section 1, Chapter 24, Title 3 of the Delaware Code.
4. Cool season species may be planted throughout summer if soil moisture is adequate or seeded area can be irrigated.
5. All leguminous seed must be inoculated.
6. Warm season grass mix and Reed Canary Grass cannot be mowed more than 4 times per year.
7. Warm season grasses require a soil temperature of at least 50 degrees in order to germinate, and will remain dormant until then.

Source:	Symbol:	Detail No.
Delaware ESC Handbook		DE-ESC-3.4.3 Sheet 3 of 4 Date: 12/03

Standard Detail & Specifications
Vegetative Stabilization

Construction Notes:

1. Site Preparation

a. Prior to seeding, install needed erosion and sediment control practices such as diversions, grade stabilization structures, berms, dikes, grassed waterways, and sediment basins.

b. Final grading and shaping is not necessary for temporary seedings.

2. Seedbed Preparation

It is important to prepare a good seedbed to insure the success of establishing vegetation. The seedbed should be well prepared, loose, uniform, and free of large clods, rocks, and other objectionable material. The soil surface should not be compacted or crusted.

3. Soil Amendments

a. Lime - Apply liming materials based on the recommendations of a **soil test** in accordance with the approved nutrient management plan. If a nutrient management plan is not required, apply dolomitic limestone at the rate of 1 to 2 tons per acre. Apply limestone uniformly and incorporate into the top 4 to 6 inches of soil.

b. Fertilizer - Apply fertilizer based on the recommendations of a **soil test** in accordance with the approved nutrient management plan. If a nutrient management plan is not required, apply a formulation of 10-10-10 at the rate of 600 pounds per acre. Apply fertilizer uniformly and incorporate into the top 4 to 6 inches of soils.

4. Seeding

a. For **temporary stabilization**, select a mixture from **Sheet 1** . For a **permanent stabilization**, select a mixture from **Sheet 2** or **Sheet 3** depending on the conditions.

b. Apply seed uniformly with a broadcast seeder, drill, cultipacker seeder or hydroseeder. All seed will be applied at the recommended rate and planting depth.

c. Seed that has been broadcast should be covered by raking or dragging and then lightly tamped into place using a roller or cultipacker. If hydroseeding is used and the seed and fertilizer is mixed, they will be mixed on site and the seeding shall be done immediately and without interruption.

5. Mulching

All mulching shall be done in accordance with detail **DE-ESC-3.4.5**.

Source:	Symbol:	Detail No.
Delaware ESC Handbook		DE-ESC-3.4.3 Sheet 4 of 4 Date: 12/03

3 ES-154 VEGETATIVE STABILIZATION

BLACK & VEATCH
Federal Services Div.
200 BELLEVUE PARKWAY, SUITE 215
WILMINGTON, DELAWARE
PHONE: (302) 798-0200 FAX: (302) 798-0201
WEBSITE: WWW.BV.COM

Rev.	Description	Date	Apr.
1	Renewed E&S Permit	2/12/14	---
2	---	---	---
3	---	---	---
4	---	---	---
5	---	---	---
6	---	---	---
7	---	---	---
8	---	---	---

Date: 02/12/2014 | Drawn by: NJS | Check by: GEH
Project #: 042403 | Design by: GEH | Review by: MJN

STATE OF DELAWARE
DEPARTMENT OF NATURAL RESOURCES AND ENVIRONMENTAL CONTROL
DIVISION OF PARKS AND RECREATION & AUBURN VILLAGE LLC

NVF PROPERTIES
NVF YORKLYN SITE (DE-0071) YORKLYN, DELAWARE

EROSION AND SEDIMENT CONTROL PLAN

E&S CONSTRUCTION DETAILS
SHEET 5

DRAWING NO.
ES-154

Standard Detail & Specifications
Site Pollution Prevention

DELAWARE EROSION & SEDIMENT CONTROL HANDBOOK

Notes:

The Construction Site Pollution Prevention Plan should include the following elements:

1. **Material Inventory**

   Document the storage and use of the following materials:

   a. Concrete
   b. Detergents
   c. Paints (enamel and latex)
   d. Cleaning solvents
   e. Pesticides
   f. Wood scraps
   g. Fertilizers
   h. Petroleum based products

2. **Good housekeeping practices**

   a. Store only enough product required to do the job.
   b. All materials shall be stored in a neat, orderly manner in their original labeled containers and covered.
   c. Substances shall not be mixed.
   d. When possible, all of a product shall be used up prior to disposal of the container.
   e. Manufacturers' instructions for disposal shall be strictly adhered to.
   f. The site foreman shall designate someone to inspect all BMPs daily.

3. **Waste management practices**

   a. All waste materials shall be collected and stored in securely lidded dumpsters in a location that does not drain to a waterbody.
   b. Waste materials shall be salvaged and/or recycled whenever possible.
   c. The dumpsters shall be emptied a minimum of twice per week, or more if necessary. The licensed trash hauler is responsible for cleaning out dumpsters.

Source:	Symbol:	Detail No.
Adapted from USEPA Pub. 840-B-92-002		DE-ESC-3.6.1 Sheet 1 of 3 Date: 6/05

Standard Detail & Specifications
Site Pollution Prevention

DELAWARE EROSION & SEDIMENT CONTROL HANDBOOK

Notes (cont.)

   d. Trash shall be disposed of in accordance with all applicable Delaware laws.
   e. Trash cans shall be placed at all lunch spots and littering is strictly prohibited. Recycle bins shall be placed near the construction trailer.
   f. If fertilizer bags can not be stored in a weather-proof location, they shall be kept on a pallet and covered with plastic sheeting which is overlapped and anchored.

4. **Equipment maintenance practices**

   a. If possible, equipment should be taken to off-site commercial facilities for washing and maintenance.
   b. If performed on-site, vehicles shall be washed with high-pressure water spray without detergents in an area contained by an impervious berm.
   c. Drip pans shall be used for all equipment maintenance.
   d. Equipment shall be inspected for leaks on a daily basis.
   e. Washout from concrete trucks shall be disposed of in a temporary pit for hardening and proper disposal.
   f. Fuel nozzles shall be equipped with automatic shut-off valves.
   g. All used products such as oil, antifreeze, solvents and tires shall be disposed of in accordance with manufacturers' recommendations and local, state and federal laws and regulations.

5. **Spill prevention practices**

   a. Potential spill areas shall be identified and contained in covered areas with no connection to the storm drain system.
   b. Warning signs shall be posted in hazardous material storage areas.
   c. Preventive maintenance shall be performed on all tanks, valves, pumps, pipes and other equipment as necessary.
   d. Low or non-toxic substances shall be prioritized for use.

Source:	Symbol:	Detail No.
Adapted from USEPA Pub. 840-B-92-002		DE-ESC-3.6.1 Sheet 2 of 3 Date: 6/05

Standard Detail & Specifications
Site Pollution Prevention

DELAWARE EROSION & SEDIMENT CONTROL HANDBOOK

Notes (cont.)

   e. Contact information for reporting spills through the DNREC 24-Hour Toll Free Number shall be prominently posted.

6. **Education**

   a. Best management practices for construction site pollution control shall be a part of regular progress meetings.
   b. Information regarding waste management, equipment maintenance and spill prevention shall be prominently posted in the construction trailer.

CONTACT INFORMATION

DNREC 24-Hour Toll Free Number	**800-662-8802**
DNREC Solid & Hazardous Waste Branch	**302-739-9403**

Source:	Symbol:	Detail No.
Adapted from USEPA Pub. 840-B-92-002		DE-ESC-3.6.1 Sheet 3 of 3 Date: 6/05

1 / ES-155 SITE POLLUTION PREVENTION

Standard Detail & Specifications
Dust Control

DELAWARE EROSION & SEDIMENT CONTROL HANDBOOK

Temporary Methods:

1. Mulches - See **DE-ESC-3.4.5**, Standard Detail and Specifications for Mulching.
2. Vegetative cover - See **DE-ESC-3.4.3**, Std. Detail and Specifications for Vegetative Stabilization.
3. Adhesives - Use on mineral soils only (not effective on muck soils). Keep traffic off these areas. The following table may be used for general guidance.

Type of Emulsion	Water Dilution	Type of Nozzle	Apply Gal/Ac.
Latex emulsion	12.5:1	Fine spray	235
Resin-in-water emulsion	4.1	Fine spray	300
Acrylic emulsion (non-trafffic)	7:1	Coarse spray	450
Acrylic emulsion (traffic)	3.5:1	Coarse spray	350

4. Tillage - For emergency temporary treatment, scarify the soil surface to prevent or reduce the amount of blowing dust until a more appropriate solution can be implemented. Begin the tillage operation on the windward side of the site using a chisel-type plow for best results.
5. Sprinkling - Sprinkle site with water until the surface is moist . Repeat as needed.
6. Calcium Chloride - Apply as flakes or granular material with a spreader at a rate that will keep the soil surface moist. Re-apply as necessary.
7. Barriers - Place barriers such as soild board fences, snow fences, hay bales, etc. at right angles to the prevailing air currents at intervals of approx. 10X their height.

Permanent Methods:

1. Vegetative cover - See **DE-ESC-3.4.3**, Std. Detail and Specifications for Vegetative Stabilization.
2. Stone - Apply layer of crushed stone or coarse gravel to protect soil surface.

Source:	Symbol:	Detail No.
Adapted from VA ESC Handbook		DE-ESC-3.4.8 Sheet 1 of 1 Date: 12/03

2 / ES-155 DUST CONTROL

Standard Detail & Specifications
Mulching

DELAWARE EROSION & SEDIMENT CONTROL HANDBOOK

1. **Materials and Amounts**

   a. *Straw* - Straw shall be unrotted small grain straw applied at the rate of 1-1/2 to 2 tons per acre, or 70 to 90 pounds (two bales) per 1,000 square feet. Mulch materials shall be relatively free of weeds and shall be free of noxious weeds such as; thistles, Johnsongrass, and quackgrass. Spread mulch uniformly by hand or mechanically. For uniform distribution of hand spread mulch, divide area into approximately 1,000 square feet sections and place 70-90 pounds (two bales) of mulch in each section.

   b. *Wood chips* - Apply at the rate of approximately 6 tons per acre or 275 pounds per 1,000 square feet when available and when feasible. These are particularly well suited for utility and road rights-of-way. If wood chips are used, increase the application rate of nitrogen fertilizer by 20 pounds of N per acre (200 pounds of 10-10-10 or 66 pounds of 30-0-0 per acre).

   c. *Hydraulically applied mulch* -The following conditions apply to hydraulically applied mulch:

      i. Definitions:

         a. Wood fiber mulch shall consist of specially prepared wood that has been processed to a uniform state, is packaged for sale as a hydraulic mulch for use with hydraulic seeding equipment, and consists of a minimum of 70% virgin or recycled wood fiber combined with 30% paper fiber and additives.
         b. Blended fiber mulch shall consist of any hydraulic mulch that contains greater than 30% paper fiber. The paper component must consist of specially prepared paper that has been processed to a uniform fibrous state and is packaged for sale as a hydraulic mulch for use with hydraulic seeding equipment.
         c. A bonded fiber matrix (BFM) consists of long strand, specially prepared wood fibers that have been processed to a uniform state held together by a water resistant bonding agent. BFMs shall contain no paper (cellulose) mulch but may contain small percentages of synthetic fibers to enhance performance.
         d. Refer to **Figure 3.4.5a** for conditions and limitations of use for each of the above categories of hydraulic mulch.

      ii. All components of the hydraulically applied mulches shall be pre-packaged by the manufacturer to assure material performance. Field mixing of the mulch components is acceptable, but must be done per manufacturers recommendations to ensure the proper results.

      iii. Hydraulic mulches shall be applied with a viable seed and at manufacturer's recommended rates. Increased rates may be necessary based on site conditions.

      iv. Hydraulically applied mulches and additives shall be mixed according to manufacturers recommendations.

      iv. Materials within this category shall only be used when hydraulically applied mulch has been specified for use on the approved Sediment and Stormwater Plan, or supplemental approval from the plan approval agency has been obtained in writing for a specific area.

Source:	Symbol:	Detail No.
Delaware ESC Handbook		DE-ESC-3.4.5 Sheet 1 of 3 Date: 6/05

Standard Detail & Specifications
Mulching

DELAWARE EROSION & SEDIMENT CONTROL HANDBOOK

      v. Application:

         a. Apply product to geotechnically stable slopes that have been designed and constructed to divert runoff away from the face of the slope.
         b. Do not apply to saturated soils, or if precipitation is anticipated within 24-48 hours.
         c. During the spring (March 1 to May 31) and fall (September 1 to November 30) seasons, hydraulic mulches may be applied in a one-step process where all components are mixed together in single-tank loads. It is recommended that the product be applied from opposing directions to achieve optimum soil coverage.
         d. During the summer (June 1 to August 31) and winter (December 1 to February 28) seasons, the following two-step process is required:

            Step One– Mix and apply seed and soil amendments with a small amount of mulch for visual metering.

            Step Two – Mix and apply mulch at manufacturers recommended rates over freshly seeded surfaces. Apply from opposing directions to achieve optimum soil coverage.

         e. Minimum curing temperature is 40° F (4° C). The best results and more rapid curing are achieved at temperatures exceeding 60° F (15° C). Curing times may be accelerated in high temperature, low humidity conditions on dry soils.

      vi. Recommended application rates are for informational purposes only. Conformance with this standard and specification shall be performance-based and requires **100% soil coverage**. Any areas with bare soil showing shall be top dressed until full coverage is achieved.

2. **Anchoring mulch** - Mulch must be anchored immediately to minimize loss by wind or water. This may be done by one of the following methods, depending upon size of area, erosion hazard, and cost.

   a. *Crimping* - A crimper is a tractor drawn implement designed to punch and anchor mulch into the top two (2) inches of soil. This practice affords maximum erosion control but is limited to flatter slopes where equipment can operate safely. On sloping land, crimping should be done on the contour whenever possible.
   b. *Tracking* - Tracking is the process of cutting mulch (usually straw) into the soil using a bulldozer or other equipment that runs on cleated tracks. Tracking is used primarily on slopes 3:1 or steeper and should be done up and down the slope with cleat marks running across the slope.
   c. *Liquid mulch binders* - Applications of liquid mulch binders should be heavier at edges, in valleys, and at crests of banks and other areas where the mulch will be moved by wind or water. All other areas should have a uniform application of binder. The use of synthetic binders is the preferred method of mulch binding and should be applied at the rates recommended by the manufacturer.
   d. *Paper fiber* - The fiber binder shall be applied at a net dry weight of 750 lbs/ac. The wood cellulose fiber shall be mixed with water, and the mixture shall contain a maximum of 50 lbs. of wood cellulose fiber per 100 gallons.
   e. *Nettings* - Synthetic or organic nettings may be used to secure straw mulch. Install and secure according to the manufacturers recommendations.

Source:	Symbol:	Detail No.
Delaware ESC Handbook		DE-ESC-3.4.5 Sheet 2 of 3 Date: 6/05

Standard Detail & Specifications
Mulching

DELAWARE EROSION & SEDIMENT CONTROL HANDBOOK

MULCHING MATERIAL SELECTION GUIDE

Percent Slope	Type of Mulch / App. Rate*	Dec. 1 to Feb. 28(29)	March 1 to May 31	June 1 to Aug. 31	Sept. 1 to Nov. 30
Less than 2%	Blended Fiber @ 2000 lbs/ac. minimum	xxxxxxxxxxxxxxxxx	OK (≤ 1 ac.)	xxxxxxxxxxxxxxxxx	OK (≤ 1 ac.)
	Wood Fiber @ 2000 lbs/ac. min.	xxxxxxxxxxxxxxxxx	OK	xxxxxxxxxxxxxxxxx	OK
	BFM @ 3000 lbs/ac. min.	OK	OK	OK	OK
	Straw @ 2 Tons/ac. Min.	OK	OK	OK	OK
	Stabilization Matting**	OK	OK	OK	OK
2% to 5.9%	Wood Fiber @ 2000 lbs/ac. min.	xxxxxxxxxxxxxxxxx	OK	xxxxxxxxxxxxxxxxx	OK
	BFM @ 3000-3500 lbs/ac. min	OK	OK	OK	OK
	Straw @ 2 Tons/ac. min.	OK	OK	OK	OK
	Stabilization Matting**	OK	OK	OK	OK
6% to 10.9%	Wood Fiber @ 2000-2500 lbs/ac. min.	xxxxxxxxxxxxxxxxx	OK	xxxxxxxxxxxxxxxxx	OK
	BFM @ 3500-4000 lbs/ac. min.	OK	OK	OK	OK
	Straw @ 2 Tons/ac. min.	OK	OK	OK	OK
	Stabilization Matting**	OK	OK	OK	OK
11% to 24.9%	Wood Fiber @ 2500-3000 lbs/ac. min.	xxxxxxxxxxxxxxxxx	OK	xxxxxxxxxxxxxxxxx	OK
	BFM @ 3500-4000 lbs/ac. min.	OK	OK	OK	OK
	Straw @ 2 Tons/ac. min.	OK	OK	OK	OK
	Stabilization Matting**	OK	OK	OK	OK
25% to 33%	Wood Fiber @ 2500-3000 lbs/ac. min.	xxxxxxxxxxxxxxxxx	OK	xxxxxxxxxxxxxxxxx	OK
	BFM @ 4000 lbs/ac. min.	xxxxxxxxxxxxxxxxx	OK	xxxxxxxxxxxxxxxxx	OK
	Straw @ 2 Tons/ac. min.	OK	OK	OK	OK
	Stabilization Matting**	OK	OK	OK	OK
33% and up	BFM @ 4000-4500 lbs/ac. min.	xxxxxxxxxxxxxxxxx	OK	xxxxxxxxxxxxxxxxx	OK
	Straw @ 2 Tons/ac. min.***	OK	OK	OK	OK
	Stabilization Matting**	OK	OK	OK	OK

* Note: Manufacturers Recommended Rates for informational purposes only. Performance standard requires 100% soil coverage.
** Note: Stabilization Matting must be applied in accordance with Section 3.4.6 of the Delaware ESC Handbook.
***Note: Straw applied on slopes greater than 33% must be netted (this does not apply to topsoil stockpiles).
OK = Acceptable to use during this time period.
xxx = Not acceptable to use during this time period.
All application rates are minimums

Source:	Symbol:	Detail No.
		DE-ESC-3.4.5 Sheet 3 of 3 Date: 6/05

3 / ES-155 MULCHING

BLACK & VEATCH
Federal Services Div.
200 BELLEVUE PARKWAY, SUITE 215
WILMINGTON, DELAWARE
PHONE: (302) 798-0200 FAX: (302) 798-0201
WEBSITE: WWW.BV.COM

Rev.	Description	Date	Apr.
8	---	---	---
7	---	---	---
6	---	---	---
5	---	---	---
4	---	---	---
3	---	---	---
2	---	---	---
1	Renewed E&S Permit	2/12/14	---

Date: 02/12/2014	Drawn by: NJS	Check by: GEH
Project #: 042403	Design by: GEH	Review by: MJN

STATE OF DELAWARE
DEPARTMENT OF NATURAL RESOURCES AND ENVIRONMENTAL CONTROL
DIVISION OF PARKS AND RECREATION & AUBURN VILLAGE LLC

NVF PROPERTIES
NVF YORKLYN SITE (DE-0071) YORKLYN, DELAWARE

EROSION AND SEDIMENT CONTROL PLAN

E&S CONSTRUCTION DETAILS
SHEET 6

DRAWING NO.
ES-155

DELAWARE EROSION & SEDIMENT CONTROL HANDBOOK

Standard Detail & Specifications

Turbidity Curtain

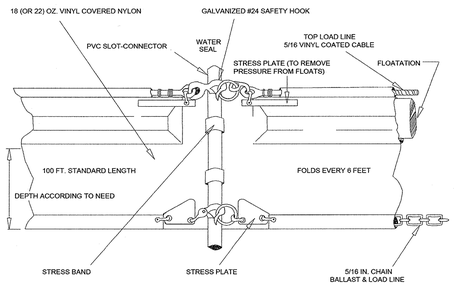

Typical Section - Type 2

DATA

Curtain type (1, 2, or 3)
Layout (Std. or Alt.)

Source:	Symbol:	Detail No.
Adapt. from Amer. Boom and Barrier Corp.	TC-(1/2/3) (Std/Alt)	DE-ESC-3.5.3 Sheet 2 of 8 Date: 12/03

DELAWARE EROSION & SEDIMENT CONTROL HANDBOOK

Standard Detail & Specifications

Turbidity Curtain

NOTE: The standard layout shown is intended for use in streams, ponds and other non-tidal waters

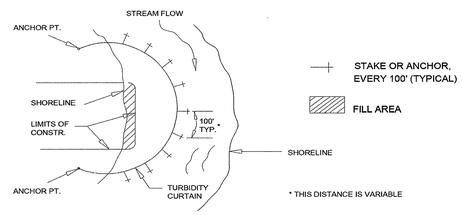

Plan - Std. Layout

Source:	Symbol:	Detail No.
Adapt. from Amer. Boom and Barrier Corp.	TC-(1/2/3) (Std/Alt)	DE-ESC-3.5.3 Sheet 4 of 8 Date: 12/03

DELAWARE EROSION & SEDIMENT CONTROL HANDBOOK

Standard Detail & Specifications

Turbidity Curtain

Construction Notes:

1. **Materials**
   a. Barriers should be a bright color (yellow or "international" orange are recommended) that will attract the attention of nearby boaters.
   b. The curtain fabric shall meet manufacturer's recommendations for the application.
   c. Seams in the fabric shall be either vulcanized welded or sewn and shall develop the full strength of the fabric.
   d. Floatation devices shall be flexible, buoyant units contained in an individual floatation sleeve or collar attached to the curtain. Buoyancy provided by the floatation units shall be sufficient to support the weight of the curtain and maintain a freeboard of at least 3 inches above the water surface level.
   e. Load lines must be fabricated into the bottom of all floating turbidity curtains. Type II and Type III must have load lines also fabricated into the top of the fabric. The top load line shall consist of woven webbing or vinyl-sheathed steel cable and shall have a break strength in excess of 10,000 pounds. The supplemental (bottom) load line shall consist of a chain incorporated into the bottom hem of the curtain of sufficient weight to serve as ballast to hold the curtain in a vertical position. Additional anchorage shall be provided as necessary. The load lines shall have suitable connecting devices which develop the full breaking strength for connection to load lines in adjacent sections as shown in the detail.
   f. External anchors may consist of wooden or metal stakes (2- x 4-inch or 2-1/2-inch minimum diameter wood or 1.33 lbs/linear foot steel) when Type I installation is used; when Type II or Type III installations are used, bottom anchors should be used.
   g. Bottom anchors must be sufficient to hold the curtain in the same position relative to the bottom of the watercourse without interfering withthe action of the curtain. The anchor may dig into the bottom (grappling hook, plow or fluke-type) or may be weighted (mushroom type) and should be attached to a floating anchor buoy via an anchor line. The anchor line should then run from the buoy to the to load line of the curtain. When used with Type III installations, these lines must contain enough slack to allow the buoy and curtain to float freely with tidal changes without pulling the buoy or curtain down and must be checked regularly to make sure they do not become entangled with debris. As previously noted, anchor spacing will vary with current velocity and potential wind and wave action; manufacturer's recommendations should be followed. See detail for orientation of external anchors and anchor buoys for tidal installations.

Source:	Symbol:	Detail No.
Adapt. from Amer. Boom and Barrier Corp.	TC-(1/2/3) (Std/Alt)	DE-ESC-3.5.3 Sheet 6 of 8 Date: 12/03

Standard Detail & Specifications

DELAWARE EROSION & SEDIMENT CONTROL HANDBOOK

Turbidity Curtain

Construction Notes (cont.)

2. **Installation**
   a. In the calm water of lakes or ponds (Type I installation) it is usually sufficient to set the curtain end stakes or anchor points (using anchor buoys if bottom anchors are employed), then tow the curtain in the furled condition out and attach it to the stakes or anchor points. Following this, any additional stakes or buoyed anchors required to maintain the desired location of the curtain may be set and these anchor points made fast to the curtain. Only then shall the furling lines be cut to allow the curtain skirt to drop.
   b. In rivers or in other moving waters (Type II and Type III installations) it is important to set all curtain anchor points. Care must be taken to ensure that anchor points are of sufficient holding power to retain the curtain under the existing current conditions, prior to putting the furled curtain into the water. Anchor buoys should be employed on all anchors to prevent the current from submerging the flotation at the anchor points. If the curtain is being installed into tidal areas which would be subject to currents in both directions, anchors should be provided on both sides of the curtain. This will minimize curtain movement and prevent the curtain from overrunning the anchors during tide reversals. After the anchors have been secured, the furled curtain should be secured to the upstream anchor point and then sequentially attached to each next downstream anchor point until the entire curtain is in position. Before unfurling, the "lay" of the curtain should be assessed and any necessary adjustments made to the anchors. Once the location has been deemed adequate, the furling lines may be cut to allow the skirt to drop.
   c. Anchor lines should be attached to the flotation device, not to the bottom of the curtain. The anchoring line attached to the flotation device on the downstream side will provide support for the curtain. Attaching the anchors to the bottom of the curtain could cause premature failure of the curtain due to the stresses imparted on the middle section of the curtain.
   d. Turbidity curtain shall not be installed across channel flows unless there is a danger of causing sediment deposition to occur in the middle of a watercourse, thereby blocking access or creating a sand bar. In such situations, the curtain may be installed so as to form a long-sided, sharp "V" to deflect clean water around a work site, confining most of the silt-laden water to the work area inside the "V" and directing it to the shoreline. In no case shall the curtain be installed perpendicular to the channel flow.

Source:	Symbol:	Detail No.
Adapt. from Amer. Boom and Barrier Corp.	TC-(1/2/3) (Std/Alt)	DE-ESC-3.5.3 Sheet 7 of 8 Date: 12/03

DELAWARE EROSION & SEDIMENT CONTROL HANDBOOK

Standard Detail & Specifications

Turbidity Curtain

Construction Notes (cont.)

3. **Maintenance**
   a. The individual(s) identified on the plan as responsible for maintenance of the curtain shall do so for the duration of the project in order to ensure the continuous protection of the watercourse.
   b. Should repairs to the geotextile fabric become necessary, repair kits are generally available from the manufacturer. The manufacturer's instructions must be followed to ensure the adequacy of the repair.
   c. When the curtain is no longer required as determined by the inspector, the curtain and related components shall be removed in such a manner as to minimize turbidity. Remaining sediment shall be sufficiently settled before removing the curtain. Sediment may be removed and the original depth (or plan elevation) restored. Any spoils must be taken to an approved upland disposal area and stabilized in accordance with the approved plan.

4. **Removal**
   a. Care shall be taken to protect the skirt from damage as the turbidity curtain is dragged from the watercourse.
   b. The site selected to bring the curtain ashore should be free of sharp rocks, broken cement, debris, etc. so as to minimize damage when hauling the curtain over the area.
   c. If the curtain has a deep skirt, it can be further protected by running a small boat along its length with a crew installing furling lines before attempting to remove the curtain from the water.

Source:	Symbol:	Detail No.
Adapt. from Amer. Boom and Barrier Corp.	TC-(1/2/3) (Std/Alt)	DE-ESC-3.5.3 Sheet 8 of 8 Date: 12/03

1 ES-156 TURBIDITY CURTAIN – TYPE 2, STANDARD

BLACK & VEATCH Federal Services Div.
200 BELLEVUE PARKWAY, SUITE 215
WILMINGTON, DELAWARE
PHONE: (302) 798-0200 FAX: (302) 798-0201
WEBSITE: WWW.BV.COM

Rev.	Description	Date	Apr.
8	---	---	---
7	---	---	---
6	---	---	---
5	---	---	---
4	---	---	---
3	---	---	---
2	---	---	---
1	Received I&S Permit	2/12/14	---

Date: 02/12/2014	Drawn by: NJS	Check by: GEH	
Project #: 042403	Design by: GEH	Review by: MDN	

STATE OF DELAWARE
DEPARTMENT OF NATURAL RESOURCES AND ENVIRONMENTAL CONTROL
DIVISION OF PARKS AND RECREATION & AUBURN VILLAGE LLC

NVF PROPERTIES
NVF YORKLYN SITE (DE-0071) YORKLYN, DELAWARE

EROSION AND SEDIMENT CONTROL PLAN

E&S CONSTRUCTION DETAILS
SHEET 7

DRAWING NO.
ES-156

CIVIL LEGEND

	EXISTING	PROPOSED
GATE		
FENCE		
GUARDRAIL		
RAILROAD		
SIGN		
SIGN – MULTI		
LIGHT POLE		
POLE		
METAL COVER		
SHRUB / TREE / BRUSH		
STREAM		
OVERHEAD PIPE		
UTILITY POLE		
GAS LINE	GAS	
HYDROCHLORIC ACID LINE	HCL	
SANITARY SEWER GRAVITY LINE	SS	
SANITARY SEWER FORCE MAIN	FM	
STORM CULVERT		
PERFORATED HDPE UNDERDRAIN		D
WATER LINE	W	
ZINC – RECYCLE	ZN	
VALVE		
CONCRETE DRAIN		
CATCH BASIN		
MANHOLE	MH	
SANITARY SEWER MANHOLE AND STEEL SLEEVE		SS
MAJOR CONTOUR LINE	1100	1100
MINOR CONTOUR LINE		
BUILDINGS		
STANDARD ASPHALT		
POROUS PAVEMENT		
UNPAVED ROAD/PARKING		
EXISTING ASPHALT TO BE STRIPED		
GEOMEMBRANE		
EROSION CONTROL BLANKET		
COIR FIBER MATTING		
PROPERTY LINE		
CONSTRUCTION LIMITS		LOD
ROADWAY CENTERLINE		
RIGHT OF WAY	R/W	R/W
PERMANENT EASEMENT		P/E
PROJECT KEY MAP		
RIPRAP		
ROADWAY STATIONING		10+00 11+00

SEQUENCE OF CONSTRUCTION:

1. Notify DNREC, Sediment and Stormwater Program, in writing a minimum of 5 days before any land disturbing activity and to schedule a pre–construction meeting.
2. Contact Delaware Miss Utility prior to any site work. Additionally the contractor shall employ a professional utility locator to field locate existing utilities, many of which are privately owned.
3. Clearing and grubbing for those areas necessary for installation of perimeter controls.
4. Construction of perimeter controls: Includes super silt fence, stabilized construction entrance as shown.
5. Remaining clearing and grubbing
6. Prepare site for demolition: Remove electric, water, and sewer
7. Demolition and removal of all items within the LOD, except for the areas within the banks of the tributary where disturbance will take place. Materials should be hauled offsite per local regulations.
8. Construct cofferdams 1A and 1B prior to demolition and installation of culverts (existing and proposed 48" culverts). Installation of geotextile dewatering bag 1 and riprap stilling basin 1.

a. Install the modified cofferdams per Detail 1 on ES–151 upstream and downstream of culvert construction area, and a pump system to divert base flow (capacity 29,500gpm minimum) around cofferdam 1A towards the riprap stilling basin 1.

b. Contractor shall use an approved geotextile dewatering bag.

c. Cofferdam 1A, 1B, Geotextile dewatering bag 1 and riprap stilling basin 1 can be removed once all disturbed areas within the tributary work area have been stabilized in accordance with the approved plan.

d. Contractor shall modify cofferdam and pump system by construction means and methods to protect the construction area.

e. Location and sequencing of the cofferdams can be changed with the approval of the Engineer.

9. Super silt fence location will be modified with the installation of the two 48 inch culverts. See Sheet ES–131 Phase 1B for layout.
10. Install storm drains and catch basins.
11. Install inlet protection at the catch basins. Place rip–rap per plan specifications.
12. Grading for Gun Club Road.
13. Construction of Gun Club Road: Porous pavement, curbs, curb cuts, underdrains.
14. Once the existing Gun Club road bridge has been prepared for demolition, install cofferdams 2A and 2B per detail 1 on ES–151, pump system (capacity 29,500gpm), stilling basin 2 and geotextile dewatering bag 2.

a. Remove existing bridge

b. Grading for proposed tributary

c. Cofferdam 2A, 2B, Geotextile dewatering bag 2 and riprap stilling basin 2 can be removed once all disturbed areas within the tributary work area have been stabilized in accordance with the approved plan.

d. Contractor shall modify cofferdam and pump system by construction means and methods to protect the construction area.

e. Location and sequencing of the cofferdams can be changed with the approval of the Engineer.

f. Refer to Maintenance of Traffic details for construction phasing.

15. Final Grading.
16. Install landscaping and site stabilization.
17. Remove all erosion and sediment controls after receiving final approval for DNREC, Sediment and Stormwater.

GENERAL NOTES:

1. Prior to beginning any work, contractor to verify all existing elevations and site conditions. Any variation from existing elevations shown must be verified by a PLS licensed in the State of Delaware.

2. All entrances shall conform to the Delaware Department of Transportation's (DelDOT's) current Standards and Regulations for Subdivision Streets and State Highway Access and shall be subject to its approval.

3. All materials and workmanship, including storm drain piping, inlet, manhole and end section installation, within the State of Delaware right–of–way shall be in accordance with current State of Delaware Department of Transportation Standard Specifications for Road and Bridge Construction, Supplemental Specifications, Standard Construction Details, Special Provisions and Design Guidance Memorandums.

4. All disturbed areas within the State right–of–way, but not in the pavement, shall be top–soiled (6" minimum), fertilized, seeded and mulched.

5. A 72–hour (minimum) notice shall be given to the DelDOT district permit supervisor prior to starting entrance construction.

6. Miss Utility of Delaware shall be notified three (3) consecutive working days prior to excavation, at 1–800–282–8555.

7. All signing, pavement markings, and maintenance of traffic is the contractor's responsibility and shall follow the guidelines shown in the Delaware Manual on Uniform Traffic Control Devices (DE MUTCD) for Streets and Highways (latest edition). The owner or maintenance corporation shall be responsible for maintenance of all signs installed as part of this project.

8. Plan location and dimensions shall be strictly adhered to unless otherwise directed by the DelDOT District Permit Supervisor.

9. A copy of the up to date approved construction documents and DelDOT approval letters to be maintained on the project site at all times and be available for inspection by DelDOT personnel. These documents will be provided by DNREC and will be maintained by the Contractor.

10. Existing utilities are shown in accordance with the best available information. Completeness or correctness thereof is not guaranteed. It shall be the contractor's responsibility to contact the utility companies involved in order to secure the most accurate information available as to utility location and elevation. No construction around or adjacent to utilities shall begin without notifying their owners at least 48–hours in advance. The contractor shall take the necessary precautions to protect the existing utilities and maintain uninterrupted service and any damage done to them due to his/her negligence shall be immediately and completely repaired at the contractor's expense. To locate existing utilities in the field prior to construction, the contractor shall contact Miss Utility of Delaware (See Note #6).

11. Should utility relocation be required within the DelDOT Right of Way, the developer (DNREC Parks & Rec) must submit a utility relocation plan for DelDOT review, along with correspondence from the utility companies stating preliminary approval to the relocation and design of the utilities prior to the DelDOT pre–construction meeting. No physical construction can occur until the utility plans are approved, the individual utility companies issue final approval, and a DelDOT utility permit is issued.

12. Design, fabrication and installation of all permanent signing shall be as outlined in the DE MUTCD.

13. Design and installation of all pavement markings and striping shall be as outlined in the DE MUTCD. For final permanent pavement markings, epoxy resin paint shall be required for long line striping and thermo will be required for short line striping, i.e. symbols/legends.

14. Breakaway posts shall be used when installing all signs. Reference DelDOT Standard Construction Detail T–15.

15. Subdivision streets constructed within the limits of the right–of–way dedicated to the public use shown on this plan are to be maintained by the State of Delaware following the completion of the streets by the developer (DNREC Parks & Rec) to the satisfaction of the State. The State accepts no maintenance responsibility within the dedicated street Right–Of–Way until the streets have been accepted by the State.

16. The ends of all curbs shall be transitioned to be flush with the pavement at a ratio of twelve to one (12:1). Taper Curb per local DelDOT District Field Supervisor (Typical for both sides of the entrance).

17. A double yellow centerline will be required along the paved portion of Yorklyn Road and Gun Club Road. Striping of the centerline shall be 5–inch wide line separated by a 6–inch space.

18. Verify if any utilities within the DelDOT Right of Way will need to be relocated due to the addition of the shoulder. For clear zone purposes, all utilities are to be a minimum of 10–feet from the edge of travel lane or 5–feet from the edge of pavement. Any utility that does not meet this requirement shall be relocated.

19. It is the contractor's responsibility to insure that paving within the State of Delaware right–of–way is installed to the elevations shown and that no ponding of water exists after paving is complete.

20. All storm drain piping designated as RCP is to be reinforced concrete pipe, meeting AASHTO M–170 specifications. See plans for specific class of pipe.

21. Warm–mix shall be placed in accordance with DelDOT Special Provision(s) 401800 – WMA Superpave.

22. The developer (DNREC Parks & Rec) and existing/future owner of non–state–maintained roadways shall ensure that the traffic control devices on said roadways open to public travel are in compliance with the Delaware MUTCD.

23. All entrances shall conform to the State of Delaware Department of Transportation (DelDOT) Standards and Regulations for Subdivision Streets and State Highway Access and will be subject to its approval.

24. Subdivision streets constructed shown as private on this plan are to be maintained by the developer (DNREC Parks & Rec), property owners or both. The State of Delaware (DelDOT) assumes no maintenance responsibilities for the future maintenance of these streets.

25. Plan location and dimensions shall be strictly adhered to unless otherwise directed by the District Permit Supervisor.

26. No landscaping shall be permitted within the DelDOT right–of–way.

27. A copy of the up to date approved maintenance of traffic plans and approval letter shall be on the project at all times. This will be provided by DNREC and will be maintained by the Contractor.

28. Refer to Details 6 and 7 on sheet C–150 for details and specifications on how the existing and proposed edge of Yorklyn Road will be constructed.

29. Unless otherwise noted, all objects (pipes, tanks, concrete walls, fences, etc..) within the construction limits shall be removed from the site and legally disposed of.

30. Right–of–way monuments shall be set and/or placed along the right–of–way on a minimum of one side of the road at every change in the right–of–way alignment, and at the property corners by a Professional Land Surveyor (PLS) licensed in Delaware.

31. Prior to the start of work the contractor shall submit a Site Specific Health and Safety Plan for approval by the owner or owner's representative.

32. Issued For Construction
The contractor shall be responsible for any design, design progression and integration required to accommodate the actual equipment, materials and components purchased for this project where the contractor supplied items differ from the design basis as shown on these documents. The contractor provided design shall be performed by qualified professional engineer(s) with relevant experience to, and normally engaged in the design work provided.

TEMPORARY TRAFFIC CONTROL NOTES:

1. All work shall be performed in a manner that will reasonably provide the least practicable obstruction to road users, including vehicular traffic, bicycle traffic and pedestrian traffic.

2. All temporary traffic control and temporary traffic control devices shall be in accordance with: the contract documents, the latest edition of the manual titled "State of Delaware Manual on Uniform Traffic Control Devices (MUTCD)"(hereinafter referred to as the "Delaware MUTCD"), current State of Delaware Department of Transportation Standard Specifications for Road and Bridge Construction, and Supplemental Specifications, including all revisions as of the date of the entrance permit approval.

3. The Department (DelDOT) reserves the right to stop the Contractor's operations, if, in the opinion of the Department's Representative, the Contractor's operations are not in compliance with the Delaware MUTCD, the specifications or the plans or if the Contractor's operations are deemed unsafe.

4. If the Contractor desires to deviate from the Temporary Traffic Control Plan (TTCP) provided in the plan set or desires changes to the phasing or scope of the TTCP, the Contractor shall submit a new TTCP to the District Safety Officer for approval prior to the start of work at each and every location. The TTCP shall be prepared, signed and sealed by a Professional Engineer registered in the State of Delaware and shall be prepared in accordance with all applicable DelDOT standards. The TTCP shall be submitted 14 calendar days in advance of starting work.

5. All roadway closures or lane closures beyond those specified and approved in the Plans shall be approved by the District Safety Officer a minimum of two weeks in advance of the proposed restriction.

6. Temporary traffic control devices shall be maintained in good condition in accordance with the brochure entitled "Quality Guidelines for Temporary Traffic Control Devices", published by the American Traffic Safety Services Association (ATSSA). Any temporary traffic control devices that do not meet the quality guidelines shall be removed and replaced with acceptable devices. Failure to comply will result in work stoppage.

7. Temporary traffic control devices used on all roadways open to the public in Delaware shall conform to the Delaware MUTCD and shall be in new or refurbished condition. All devices shall be crashworthy in accordance with the National Cooperative Highway Research Program (NCHRP) Report 350 and/or in accordance with the latest edition of the Manual for Assessing Safety Hardware (MASH), published by the American Association of State Highway and Transportation Officials (AASHTO). The Contractor shall submit certification for all temporary traffic control devices used specifically on this project to the District Safety Officer at or prior to the pre–construction meeting. The Contractor shall not begin work or place any temporary traffic control devices until the certification of devices has been approved by the District Safety Officer.

8. Any deficiencies related to temporary traffic control that are reported to the Contractor in writing shall be corrected within 24 hours or as directed by the District Safety Officer. Corrective actions on severe deficiencies shall be taken immediately. Failure to comply will result in the suspension of work until devices are brought back into compliance.

9. Access to all businesses and residences within the Project limits shall be maintained throughout the duration of this Contract. Any temporary closure of a driveway or entrance for tie–in purposes shall be coordinated with the Engineer and the property owner in advance of the closure.

10. Access to all transit stops located within the project limits shall be maintained unless otherwise directed by the Plans or the Engineer. Maintaining access to the transit stop shall include maintaining an area of the transit vehicle to stop to pick–up and discharge passengers and also an accessible path for pedestrians to safely access the transit stop.

11. The Contractor shall provide all property owners and residents who live adjacent to the work zone with written notice, 48 hours in advance of the start of construction work. This notification shall include the scope of work, working hours, anticipated start and completion dates; a summary of construction activities which may interfere with access to the property including a schedule and access coordination plan, Contractor's name and address and a DelDOT contact phone number. Failure to give proper notice will result in a suspension of the work requiring notice, until proper notice is provided. The Contractor shall provide written verification to the Engineer that the property owners and residents were notified.

12. The Contractor shall be responsible for notifying the local 911 center, local schools and the DelDOT Public Information Center of all roads and lanes to be closed a minimum of seven calendar days before the closure.

13. The Contractor shall notify the local 911 center if access to a fire hydrant is temporarily restricted.

14. The Contractor shall be responsible for ensuring that the Transportation Management Center is notified each and every day when work is being performed in State right–of–way. The Contractor shall identify the type of work, any lane(s) or shoulders closed, the length of time for work, when the lane restrictions are in place and when lane restrictions are lifted, contact person/phone number and State Inspector. The Transportation Management Center can be reached at (302) 659–4600.

15. At the end of each workday, the Contractor shall correct all vertical differences in accordance with Table 6G–1 of the Delaware MUTCD.

16. At the end of each day's operation and before traffic is returned to unrestricted roadway use, temporary pavement markings shall be applied in accordance with the Delaware MUTCD and DelDOT's Temporary Pavement Markings Policy.

17. When side roads intersect the work zone, additional traffic control devices shall be erected including permanent warning signs.

18. All storage of equipment and material shall comply with section 6G.22 of the Delaware MUTCD.

19. All Flaggers shall comply with Chapter 6E of the Delaware MUTCD.

20. The Contractor shall be responsible for coordinating his/her work with other contractors in the area.

21. All persons working within the State right–of–way shall wear a minimum of an ANSI Class II safety vest meeting or exceeding the ANSI 107–2004 requirements, as specified in the Delaware MUTCD.

22. All pavement markings that are no longer in use and conflict with temporary pavement markings shall be removed and completely obliterated by a method approved by the Engineer. Painting over the conflicting pavement markings will not be accepted as a method of removal.

23. The Contractor is responsible for the maintenance of existing pavement within the project limits for the duration of the contract or as directed by the Engineer.

24. All roadways and entrances not open to traffic shall be closed using Type III barricades and shall be installed per the Delaware MUTCD. If the roadway or entrance is closed for more than one month, the Contractor shall erect permanent barricades as directed in Part 3 of the Delaware MUTCD.

25. Within the mainline work area, permanent advance warning signs with the legends ROAD WORK 1500 FT, ROAD WORK 1000 FT and ROAD WORK 500 FT shall be installed in advance of the work area in both directions. An END ROAD WORK sign shall be located 500 feet away from the work area in both directions. On intersecting roadways within the project limits, a ROAD WORK AHEAD sign shall be placed at a distance not less than 500 feet in advance of the work area and an END ROAD WORK sign shall be located 500 feet downstream of the work area. All permanent advance warning signs shall be ground mounted on two NCHRP–350 or MASH approved breakaway posts and shall be mounted in compliance with the Delaware MUTCD. Permanent advance warning signs shall be mounted at a height of 7 feet, measured from the roadway to the bottom of the sign. The use of skid mounted sign supports is not allowed unless the Contractor can demonstrate that a utility conflict exists, which shall be verified by the Engineer; or concrete medians prevent the installation of the permanent advance warning signs in the appropriate location.

26. Contractor shall supply message boards that are to be placed ten (10) days prior to construction along Route 257. The proper wording on the message board will need to be coordinated with the District Safety Officer.

BLACK & VEATCH
Federal Services Div.
200 DELAWARE PARKWAY, SUITE 215
DELAWARE, DELAWARE
PHONE: (302) 798–0200 FAX: (302) 798–0201
WEBSITE: WWW.BV.COM

Rev.	Description	Date	Apr.
1	Removed ESS Permit	2/12/14	---
2	---	---	---
3	---	---	---
4	---	---	---
5	---	---	---
6	---	---	---
7	---	---	---
8	---	---	---

Date: 02/12/2014	Drawn by: NJS	Check by: GEH
Project #: 042403	Design by: GEH	Review by: MJN

STATE OF DELAWARE
DEPARTMENT OF NATURAL RESOURCES AND ENVIRONMENTAL CONTROL
DIVISION OF PARKS AND RECREATION & AUBURN VILLAGE LLC

NVF PROPERTIES
NVF YORKLYN SITE (DE-0071) YORKLYN, DELAWARE

EROSION AND SEDIMENT CONTROL PLAN

CIVIL LEGEND AND GENERAL NOTES

DRAWING NO.
C-100

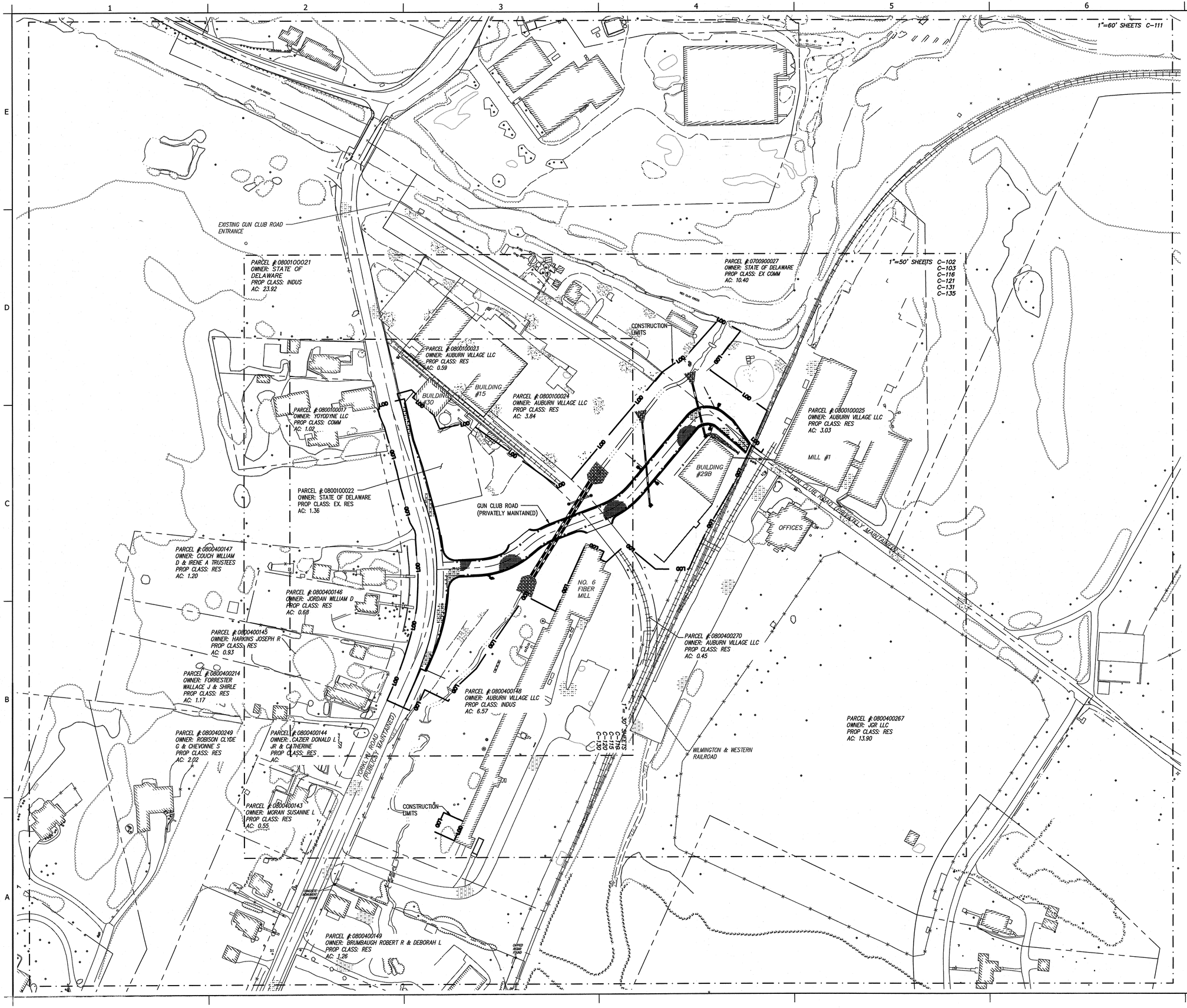

NOTES:

1. SEE SHEET C-100 FOR CIVIL LEGEND AND GENERAL NOTES.
2. SEE SHEET C-102 FOR EXISTING SITE SURVEY.
3. SEE SHEET C-103 FOR CONSTRUCTION LIMITS.
4. SEE SHEET C-104 FOR DEMOLITION PLAN.
5. SEE SHEETS C-110 AND C-111 FOR SITE LAYOUTS.
6. SEE SHEETS C-115 AND C-116 FOR UTILITY PLANS.
7. SEE SHEETS C-120 AND C-121 FOR GRADING PLANS.
8. SEE SHEETS C-130 AND C-131 FOR SIGNING AND STRIPING PLANS.
9. SEE SHEET C-135 FOR PERMANENT EROSION AND SEDIMENT CONTROL PLAN.
10. SEE SHEET C-140 FOR GUN CLUB ROAD PROFILE AND CROSS SECTIONS.
11. SEE SHEET C-141 FOR DRAINAGE PROFILES.
12. SEE SHEET C-142 FOR ENTRANCE CROSS SECTIONS.
13. SEE SHEETS C-150 TO C-158 FOR CONSTRUCTION DETAILS.

BLACK & VEATCH
Federal Services Div.
200 BELLEVUE PARKWAY, SUITE 215
WILMINGTON, DELAWARE
PHONE: (302) 798-0200 FAX: (302) 798-0201
WEBSITE: WWW.BV.COM

Rev.	Description	Date	Apr.
1	Removed E&S Permit	2/12/14	---
2	---	---	---
3	---	---	---
4	---	---	---
5	---	---	---
6	---	---	---
7	---	---	---
8	---	---	---

Date: 02/12/2014	Drawn by: TVS	Check by: GER	
Project #: 0424043	Design by: GER	Review by: MBN	

STATE OF DELAWARE
DEPARTMENT OF NATURAL RESOURCES AND ENVIRONMENTAL CONTROL
DIVISION OF PARKS AND RECREATION & AUBURN VILLAGE LLC

NVF PROPERTIES
NVF YORKLYN SITE (DE-0071) YORKLYN, DELAWARE

EROSION AND SEDIMENT CONTROL PLAN

PROJECT KEYPLAN

DRAWING NO.
C-101

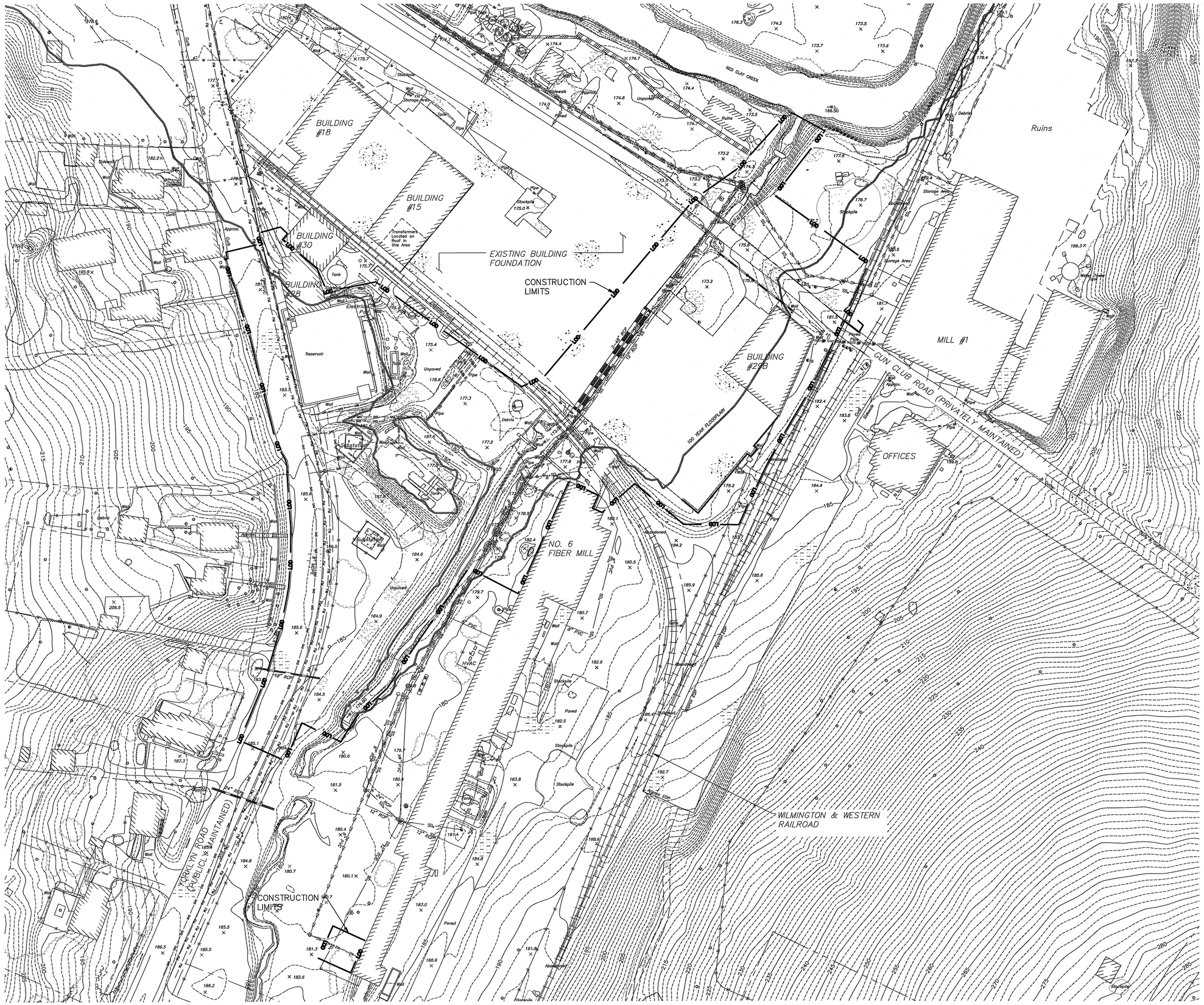

NOTES:

1. SEE SHEET C-100 FOR CIVIL LEGEND AND GENERAL NOTES.
2. SEE SHEET C-101 FOR PROJECT KEY PLAN.
3. SEE SHEET C-103 FOR CONSTRUCTION LIMITS.
4. SEE SHEET C-104 FOR DEMOLITION PLAN.
5. SEE SHEETS C-110 AND C-111 FOR SITE LAYOUTS.
6. SEE SHEETS C-115 AND C-116 FOR UTILITY PLANS.
7. SEE SHEETS C-120 AND C-121 FOR GRADING PLANS.
8. SEE SHEETS C-130 AND C-131 FOR SIGNING AND STRIPING PLANS.
9. SEE SHEET C-135 FOR PERMANENT EROSION AND SEDIMENT CONTROL PLAN.
10. SEE SHEET C-140 FOR GUN CLUB ROAD PROFILE AND CROSS SECTIONS.
11. SEE SHEET C-141 FOR DRAINAGE PROFILES.
12. SEE SHEET C-142 FOR ENTRANCE CROSS SECTIONS.
13. SEE SHEETS C-150 TO C-158 FOR CONSTRUCTION DETAILS.

0' 50' 150'

SCALE: 1" – 50'

BLACK & VEATCH
Federal Services Div.
200 BELLEVUE PARKWAY, SUITE 215
WILMINGTON, DELAWARE
PHONE: (302) 798-0200 FAX: (302) 798-0201
WEBSITE: WWW.BV.COM

Rev.	Description	Date	Apr.
1	Renewed E&S Permit	2/12/14	---
2	---	---	---
3	---	---	---
4	---	---	---
5	---	---	---
6	---	---	---
7	---	---	---
8	---	---	---

Date: 02/12/2014	Drawn by: MJS	Check by: GEH	8
Project #: 04-2403	Design by: GEH	Review by: NJH	5

STATE OF DELAWARE
DEPARTMENT OF NATURAL RESOURCES AND ENVIRONMENTAL CONTROL
DIVISION OF PARKS AND RECREATION & AUBURN VILLAGE LLC

NVF PROPERTIES
NVF YORKLYN SITE (DE-0071) YORKLYN, DELAWARE

EROSION AND SEDIMENT CONTROL PLAN

EXISTING SITE SURVEY

DRAWING NO.
C-102

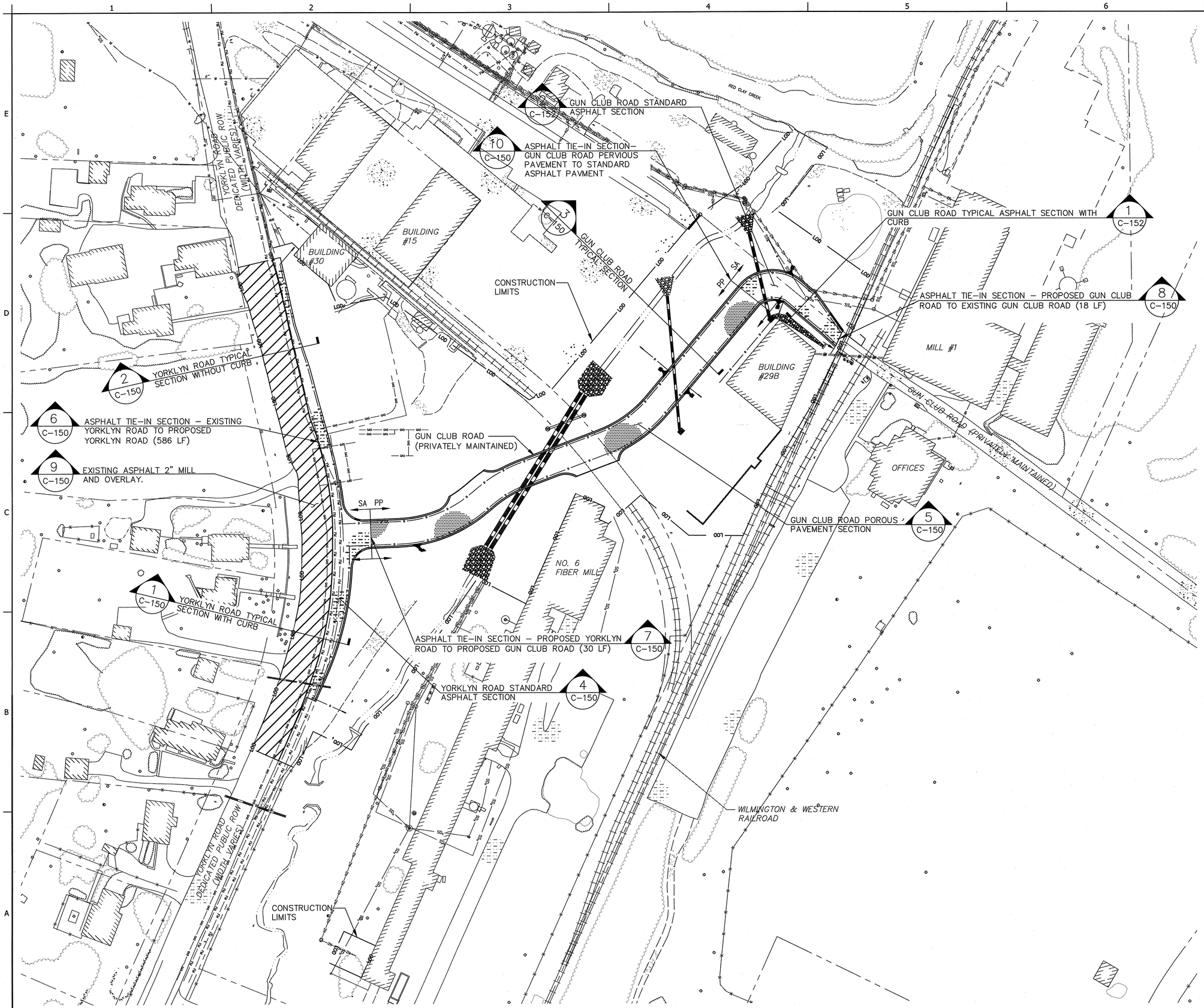

NOTES:

1. SEE SHEET C-100 FOR CIVIL LEGEND AND GENERAL NOTES.
2. SEE SHEET C-101 FOR PROJECT KEY PLAN.
3. SEE SHEET C-102 FOR EXISTING SITE SURVEY.
4. SEE SHEET C-104 FOR DEMOLITION PLAN.
5. SEE SHEETS C-110 AND C-111 FOR SITE LAYOUTS.
6. SEE SHEETS C-115 AND C-116 FOR UTILITY PLANS.
7. SEE SHEETS C-120 AND C-121 FOR GRADING PLANS.
8. SEE SHEETS C-130 AND C-131 FOR SIGNING AND STRIPING PLANS.
9. SEE SHEET C-135 FOR PERMANENT EROSION AND SEDIMENT CONTROL PLAN.
10. SEE SHEET C-140 FOR GUN CLUB ROAD PROFILE AND CROSS SECTIONS.
11. SEE SHEET C-141 FOR DRAINAGE PROFILES.
12. SEE SHEET C-142 FOR ENTRANCE CROSS SECTIONS.
13. SEE SHEETS C-150 TO C-158 FOR CONSTRUCTION DETAILS.
14. ALL YORKLYN ROAD EXISTING ASPHALT WITHIN LOD TO INCLUDE 2" MILL AND OVERLAY. OVERLAY TO MATCH SHEET C-150, DETAIL 4 (2" HOT MIX ASPHALT TYPE C SUPERPAVE). RESTORE BACK TO EXISTING GRADES.

BLACK & VEATCH
Federal Services Div.
200 BELLEVUE PARKWAY, SUITE 215
WILMINGTON, DELAWARE
PHONE: (302) 798-0200 FAX: (302) 798-0201
WEBSITE: WWW.BV.COM

Rev.	Description	Date	Apr.
8	---	---	---
7	---	---	---
6	---	---	---
5	---	---	---
4	---	---	---
3	---	---	---
2	---	---	---
1	Removed ESS Permit	2/12/14	---

Date: 02/12/2014 | Drawn by: NJS | Check by: GEH
Project #: 042403 | Design by: GEH | Review by: MJN

STATE OF DELAWARE
DEPARTMENT OF NATURAL RESOURCES AND ENVIRONMENTAL CONTROL
DIVISION OF PARKS AND RECREATION & AUBURN VILLAGE LLC

NVF PROPERTIES
NVF YORKLYN SITE (DE-0071) YORKLYN, DELAWARE

EROSION AND SEDIMENT CONTROL PLAN

CONSTRUCTION LIMITS

DRAWING NO.
C-103

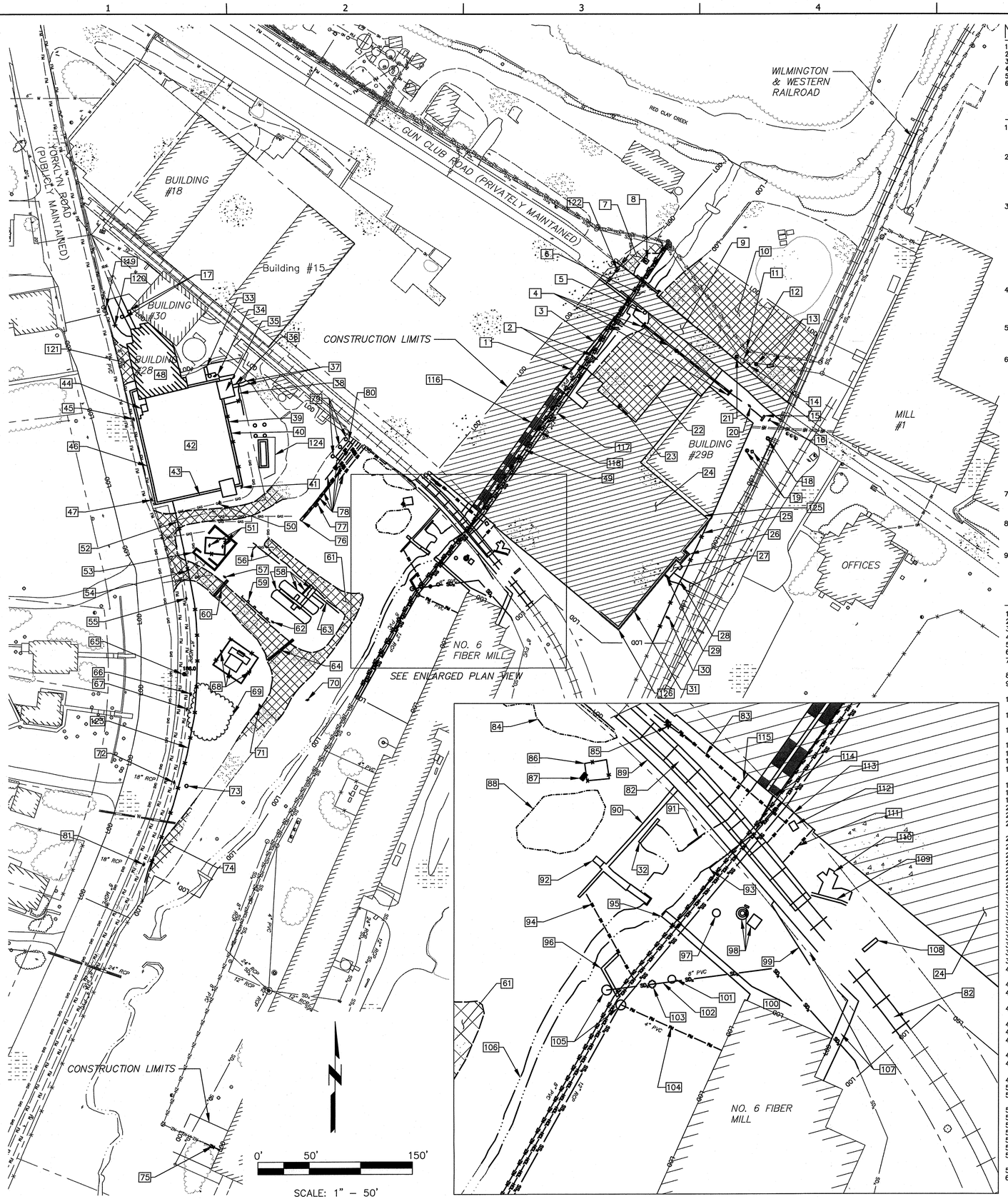

NOTES:

1. SEE SHEET C-100 FOR CIVIL LEGEND AND GENERAL NOTES.
2. SEE SHEET C-101 FOR PROJECT KEY PLAN.
3. SEE SHEET C-102 FOR EXISTING SITE SURVEY.
4. SEE SHEET C-103 FOR CONSTRUCTION LIMITS.
5. SEE SHEETS C-110 AND C-111 FOR SITE LAYOUTS.
6. SEE SHEETS C-115 AND C-116 FOR UTILITY PLANS.
7. SEE SHEETS C-120 AND C-121 FOR GRADING PLANS.
8. SEE SHEETS C-130 AND C-131 FOR SIGNING AND STRIPING PLANS.
9. SEE SHEET C-135 FOR PERMANENT EROSION AND SEDIMENT CONTROL PLAN.
10. SEE SHEET C-140 FOR GUN CLUB ROAD PROFILE AND CROSS SECTIONS.
11. SEE SHEET C-141 FOR DRAINAGE PROFILES.
12. SEE SHEET C-142 FOR ENTRANCE CROSS SECTIONS.
13. SEE SHEETS C-150 TO C-158 FOR CONSTRUCTION DETAILS.

DEMOLITION NOTES:

1. THE CONTRACTOR IS RESPONSIBLE FOR IDENTIFYING ALL PERMITS APPLICABLE TO DEMOLITION AND IS RESPONSIBLE FOR OBTAINING ALL PERMITS APPLICABLE TO DEMOLITION.
2. THE CONTRACTOR IS RESPONSIBLE FOR SECURING AREAS OF OPEN EXCAVATIONS TO PREVENT PUBLIC ACCESS UNTIL EXCAVATIONS ARE FILLED OR OTHERWISE NO LONGER PRESENT A HAZARD TO THE PUBLIC. THE CONTRACTOR'S PROCEDURE/METHOD SHALL BE REVIEWED BY, AND COORDINATED WITH, THE OWNER'S REPRESENTATIVE PRIOR TO THE START OF WORK.
3. MAINTENANCE OF TRAFFIC – ALL WORK SHALL BE PERFORMED IN ACCORDANCE WITH THE DELDOT SAFETY PERMIT AND APPROVED MAINTENANCE OF TRAFFIC PLAN OBTAINED BY THE OWNER (DNREC, PARKS & REC) FOR THIS PROJECT AND IN A MANNER THAT WILL ENSURE THE LEAST PRACTICABLE OBSTRUCTION TO THE TRAVELING PUBLIC CONSISTENT WITH SAFETY AND SHALL COMPLY WITH THE DELDOT MANUAL ENTITLED "DELAWARE MANUAL ON UNIFORM TRAFFIC CONTROL DEVICES, PART 6, TEMPORARY TRAFFIC CONTROL AND WITH NCHRP REPORT 350 AS DEFINED IN SECTION 'A' OF THE TRAFFIC CONTROL MANUAL. THE MOST CURRENT VERSION OF THIS MANUAL IN EFFECT AT THE TIME OF ADVERTISEMENT FOR BIDS SHALL BE USED.
4. THE CONTRACTOR IS RESPONSIBLE FOR REMOVAL OF ABANDONED ITEMS, TRASH, AND DEBRIS THAT ARE ON SITE AT THE TIME OF BID OPENING, REGARDLESS OF WHETHER OR NOT SPECIFICALLY SHOWN IN THE BID DOCUMENTS. NO TRASH OR DEBRIS SHALL BE BURIED OR BURNED ON SITE.
5. THE CONTRACTOR SHALL PROTECT ALL FEATURES NOT DESIGNATED TO BE REMOVED. DAMAGED ITEMS SHALL BE REPAIRED OR REPLACED AS DIRECTED BY THE OWNER AT THE CONTRACTOR'S EXPENSE.
6. BEFORE WORK IS STARTED, THE CONTRACTOR SHALL NOTIFY 'MISS UTILITY' TEL. (800) 282-8555. THE CONTRACTOR IS ADVISED THAT MANY UTILITIES ON SITE ARE PRIVATELY OWNED AND MISS UTILITY MAY REFUSE TO LOCATE THEM. THE CONTRACTOR SHALL VERIFY THE LOCATIONS OF ALL ACTIVE AND TENTATIVE UTILITIES IN THE FIELD BY EMPLOYING A PROFESSIONAL UTILITY LOCATOR TO FIELD LOCATE EXISTING ACTIVE UTILITIES PRIOR TO ANY EXCAVATION. EXISTING UTILITIES ARE SHOWN ON THESE DRAWINGS BASED ON THE BEST INFORMATION AVAILABLE, HOWEVER THIS INFORMATION HAS NOT BEEN FIELD VERIFIED AND IS NOT GUARANTEED. ALL EXISTING UTILITIES, NOT DESIGNATED TO BE DEMOLISHED OR ABANDONED, SHALL BE PROTECTED AND TEMPORARILY SUPPORTED OR RELOCATED AS NECESSARY TO COMPLETE THE WORK IN ACCORDANCE WITH THE OWNER AND PERTINENT UTILITY COMPANY REQUIREMENTS. ANY UTILITIES NOT TO BE ABANDONED OR DEMOLISHED THAT ARE DAMAGED BY THE CONTRACTOR SHALL BE PROMPTLY AND FULLY RESTORED TO THE SATISFACTION OF THE OWNER AND THE UTILITY COMPANY. ALL COSTS SHALL BE INCIDENTAL TO THE CONTRACTOR.
7. FOR ALL UTILITY POLES DESIGNATED FOR DEMOLITION, CONTRACTOR SHALL REMOVE ADJACENT OVERHEAD ELECTRICAL POWER LINES AND SUPPORT POLES TO A MINIMUM 36" BELOW PROPOSED GRADE.
8. WITHIN THE LIMIT OF DISTURBANCE, REMOVE OVERHEAD PIPE SUPPORT POSTS, AND ELECTRICAL POWER SUPPORT POLES, AND BOLLARDS/POSTS AT VARIOUS LOCATIONS ON SITE TO A MIN. 36" BELOW PROPOSED GRADE.
9. THESE DRAWINGS DO NOT INCLUDE NECESSARY ELEMENTS OF CONSTRUCTION SAFETY. ALL CONSTRUCTION MUST BE COMPLETED IN ACCORDANCE WITH THE RULES AND REGULATIONS OF THE OCCUPATIONAL SAFETY AND HEALTH ACT, AND ALL FEDERAL, STATE, AND LOCAL RULES, REGULATIONS, AND REQUIREMENTS.
10. THE LIMIT OF DISTURBANCE SHALL BE AS SHOWN ON PLANS. THE CONTRACTOR SHALL NOT WORK OR TRESPASS OUTSIDE THE LIMIT OF DISTURBANCE AS SHOWN ON THE PLANS. DEMOLITION INCLUDES ALL ASSOCIATED STRUCTURES/PIPE CONNECTED TO THE OUTSIDE THE BUILDING.
11. AFTER REMOVING UTILITIES WITHIN THE LIMITS OF DISTURBANCE, ALL UNDERGROUND PIPES WHICH ARE CURRENTLY INACTIVE OR TO BECOME AS PART OF THE WORK ARE TO REMAIN IN PLACE AND BE PLUGGED WITH A MINIMUM 36" OF 3000 PSI CONCRETE AT THE EXPOSED END UNLESS NOTED OTHERWISE. SEE SHEET C-153, DETAIL 1.
12. ALL ITEMS INDICATED TO BE REMOVED IN THE DEMOLITION PLAN SHALL BE DISPOSED OF OFF-SITE BY THE CONTRACTOR.
13. CONTRACTOR SHALL BE RESPONSIBLE FOR TESTING OF ALL ITEMS TO BE REMOVED THAT MAY CONTAIN MATERIALS HAZARDOUS TO PUBLIC HEALTH.
14. CONTRACTOR SHALL REMOVE ALL CONCRETE STRUCTURES AND FOUNDATIONS TO A MINIMUM 36" BELOW PROPOSED GRADE. CONCRETE STRUCTURES AND FOUNDATIONS GREATER THAN 36" BELOW PROPOSED GRADE MAY REMAIN IN PLACE PROVIDED THEY ARE DESTROYED TO A CONDITION THAT WILL NOT IMPEDE THE FLOW OF GROUND OR SURFACE WATER EXCEPT AS OTHERWISE NOTED. OWNER'S REPRESENTATIVE TO APPROVE PRIOR TO BACKFILLING.
15. CONTRACTOR SHALL MAINTAIN EXISTING GUN CLUB ROAD, INCLUDING BRIDGE, DURING CONSTRUCTION.
16. ALL BUILDINGS AND PORTIONS OF BUILDINGS BEING DEMOLISHED AS PART OF THIS WORK SHALL BE CERTIFIED AS FREE OF ASBESTOS BY OTHERS AT THE START OF DEMOLITION.
17. KNOWN HAZARDOUS WASTE MATERIALS HAVE BEEN REMOVED FROM THE BUILDINGS AND PORTIONS OF THE BUILDINGS BEING DEMOLISHED AS PART OF THIS WORK. CONTRACTOR SHALL BE AWARE OF POTENTIAL FOR ADDITIONAL HAZARDOUS WASTE MATERIALS TO BE ENCOUNTERED DURING DEMOLITION
18. ALL PERSONNEL INVOLVED WITH DEMOLITION WORK MUST HAVE RECEIVED OSHA 40 HOUR 1910.120 TRAINING, WITH CURRENT 8 HOURS REFRESHER COURSES AND MEDICAL MONITORING.
19. THE CONTRACTOR SHALL FOLLOW THE APPROVED EROSION AND SEDIMENT CONTROL PLAN AND DNREC STANDARDS PRIOR TO DEMOLITION, DURING DEMOLITION, AND REMOVE E&S CONTROLS AFTER RECEIVING DNREC, SEDIMENT AND STORMWATER, APPROVAL.
20. PRIOR TO DE-ENERGIZING AND REMOVING THE OVERHEAD ELECTRICAL LINES, THE CONTRACTOR SHALL COORDINATE WITH THE OWNER AND DELMARVA POWER TO ENSURE THAT THE NEW POWER SUPPLIES TO THE FACILITIES ALONG GUN CLUB ROAD ARE OPERATIONAL AND THAT ANY POWER OUTAGES SCHEDULED ARE TO HAVE MINIMAL IMPACT. EXISTING ELECTRICAL POLES SHOWN ON EXISTING CONDITIONS PLAN, SHEET C-102.
21. ACTIVE WATER, GAS, AND ELECTRIC LINES WILL BE REMOVED AND CAPPED AT THE LOD. ALL OTHER UTILITIES WILL BE CAPPED AND ABANDONED IN PLACE UNLESS NOTED OTHERWISE IN THE UTILITY DEMOLITION LEGEND. THE EXISTING SANITARY SEWER WILL REMAIN IN PLACE.
22. ALL PAVED AND UNPAVED AREAS INDICATED TO BE DEMOLISHED TO INCLUDE A MINIMUM OF 6 INCHES OF TOPSOIL AND SEED.

DEMOLITION LEGEND:

1. BUILDING FOUNDATION – REMOVE WITHIN LOD
2. MISC. PIPES – REMOVE IN THEIR ENTIRETY
3. STEPS – REMOVE IN THEIR ENTIRETY
4. REMOVE 105 LF 24" RCP CULVERT AND BOTH CONCRETE HEADWALLS
5. MISC. POLE – REMOVE IN ITS ENTIRETY
6. BRIDGE – SEE NOTE 12
7. UNPAVED PARKING AREA – REMOVE (1,100 SF) ENTIRE DEPTH OF GRAVEL/STONE LOT
8. WALL – REMOVE IN ITS ENTIRETY
9. PAVED ROAD – REMOVE (4,300 SF) SURFACE AND SUBBASE LAYERS IN THEIR ENTIRETY
10. UNPAVED PARKING AREA – REMOVE (9,200 SF) ENTIRE DEPTH OF GRAVEL/STONE LOT
11. ZINC MANHOLE TO BE REMOVED TO A MIN 36"BELOW PROPOSED GRADE. CONNECTING PIPES ARE TO BE CAPPED DURING REMOVAL.
12. SANITARY SEWER MANHOLE SHALL RAISED TO ELEVATION OF PROPOSED POROUS PAVEMENT
13. METAL POSTS – REMOVE IN THEIR ENTIRETY
14. SIGN –RELOCATE R/R CROSSING SIGN (SEE SIGNAGE PLAN)
15. HEADWALL – REMOVE IN ITS ENTIRETY
16. SIGN – REMOVE IN ITS ENTIRETY (REPLACE WITH NEW R/R CROSSING SIGN, PER SIGNAGE PLAN)
17. MISC. POLES – REMOVE IN THEIR ENTIRETY
18. METAL POST – REMOVE IN ITS ENTIRETY
19. METAL POSTS – REMOVE IN THEIR ENTIRETY
20. UTILITY POLE – REMOVE IN ITS ENTIRETY
21. METAL POST – REMOVE IN ITS ENTIRETY
22. UNPAVED PARKING AREA – REMOVE (7,300 SF) ENTIRE DEPTH OF GRAVEL/STONE LOT
23. BOLLARD – REMOVE IN ITS ENTIRETY
24. CONCRETE FOUNDATION – REMOVE CONCRETE FOUNDATION (40,600 SF WITHIN LOD)
25. FENCE – REMOVE (130 LF) IN ITS ENTIRETY (INCLUDES POST FOOTINGS)
26. RETAINING WALL – DEMOLISH DOWN TO A HEIGHT OF 4 FT
27. SIDEWALK – REMOVE IN ITS ENTIRETY
28. GATE – REMOVE IN ITS ENTIRETY
29. RETAINING WALL – DEMOLISH DOWN TO A HEIGHT OF 4 FT
30. MISC. PIPE – REMOVE IN ITS ENTIRETY
31. AIR UNIT – REMOVE IN ITS ENTIRETY
32. CULVERT, HEADWALL AND PIPING – REMOVE WITHIN LOD
33. STEPS – REMOVE IN ITS ENTIRETY
34. CONCRETE PAD, CONCRETE POST, AND UTILITY POLE – REMOVE IN THEIR ENTIRETY
35. TRANSFORMERS – REMOVE IN ITS ENTIRETY
36. CONCRETE PAD – REMOVE IN ITS ENTIRETY
37. MISC. PIPES – REMOVE IN THEIR ENTIRETY
38. RETAINING WALL – REMOVE IN ITS ENTIRETY
39. FENCE – REMOVE (110 LF) IN ITS ENTIRETY (INCLUDES POST FOOTINGS)
40. RESERVOIR EASTERN RETAINING WALL – REMOVE TO A MIN 36" BELOW PROPOSED GRADE
41. UTILITY POLE – REMOVE IN ITS ENTIRETY
42. RESERVOIR WALLS – REMOVE TO 3' BELOW PROPOSED GRADE. REFER TO SHEET C-120 FOR PROPOSED GRADING
43. RESERVOIR SOUTHERN RETAINING WALL – REMOVE TO A MIN 36" BELOW PROPOSED GRADE
44. FENCE – REMOVE (12 LF) IN ITS ENTIRETY (INCLUDES POST FOOTINGS)
45. UTILITY POLE – TO BE RELOCATED
46. RESERVOIR WESTERN RETAINING WALL – REMOVE TO A MIN 36" BELOW PROPOSED GRADE
47. UTILITY POLE – TO BE RELOCATED
48. BUILDING – REMOVE IN ITS ENTIRETY. REMOVE ALL CONNECTED UTILITIES. (SEE NOTE 46 CONCERNING DEMOLITION OF ATTACHED WALL STRUCTURE)
49. ZINC LINE – REMOVE (540 LF WITHIN LOD) AND PLUG PER NOTES
50. UTILITY POLE – REMOVE IN ITS ENTIRETY
51. SUBSTATION, CONCRETE PADS, FENCE, AND UTILITY POLES–REMOVE IN THEIR ENTIRETY
52. GATE – REMOVE IN ITS ENTIRETY
53. RETAINING WALL – REMOVE IN ITS ENTIRETY
54. GATE – REMOVE IN ITS ENTIRETY
55. UTILITY POLE – TO BE RELOCATED
56. RETAINING WALLS – REMOVE IN THEIR ENTIRETY
57. UTILITY POLE – REMOVE IN ITS ENTIRETY
58. TANKS, PIPES, AND OVERHEAD WALKWAY – REMOVE IN THEIR ENTIRETY. REMOVE TANKS PER HAZARDOUS WASTE REGULATIONS
59. GUARDRAIL – REMOVE IN ITS ENTIRETY
60. STORM DRAIN – REMOVE IN ITS ENTIRETY
61. UNPAVED ROAD – REMOVE (11,900 SF) IN ITS ENTIRETY
62. UTILITY POLE – REMOVE IN ITS ENTIRETY
63. WALL – REMOVE IN ITS ENTIRETY
64. STORM DRAIN – REMOVE IN ITS ENTIRETY
65. VALVE – RAISE TO ELEVATION OF PROPOSED ASPHALT
66. UTILITY POLE – TO BE RELOCATED
67. UTILITY POLE – TO BE RELOCATED
68. SUBSTATION, CONCRETE PADS, FENCE, AND UTILITY POLES–REMOVE IN THEIR ENTIRETY
69. TREELINE – REMOVE IN ITS ENTIRETY (INCLUDING STUMPS)
70. UTILITY POLE – REMOVE IN ITS ENTIRETY
71. UTILITY POLE – REMOVE IN ITS ENTIRETY
72. UTILITY POLE – TO BE RELOCATED
73. POLE – REMOVE IN ITS ENTIRETY
74. UNPAVED AREA – REMOVE (650 SF) ENTIRE DEPTH OF GRAVEL/STONE LOT
75. CAP ZINC LINE AT BUILDING EXIT LOCATION
76. WALL – REMOVE IN ITS ENTIRETY
77. CONCRETE PAD – REMOVE IN ITS ENTIRETY
78. BOLLARDS – REMOVE IN THEIR ENTIRETY
79. CONCRETE PAD – REMOVE IN ITS ENTIRETY
80. MISC. PIPES – REMOVE IN THEIR ENTIRETY
81. POLE – TO BE RELOCATED
82. ABANDONED RAILROAD – REMOVE (WITHIN LOD) APPROX. 200 FT. OF RAILROAD TRACK/TIES IN THEIR ENTIRETY (INCLUDES ALL SUPPORT PIERS)
83. OVERHEAD PIPES – REMOVE IN THEIR ENTIRETY
84. DEBRIS – REMOVE IN ITS ENTIRETY
85. UTILITY POLE – REMOVE IN ITS ENTIRETY
86. FENCE – REMOVE (35 LF) IN ITS ENTIRETY (INCLUDES POST FOOTINGS)
87. CATCH BASIN – REMOVE CATCH BASIN AND ASSOCIATED PIPES (WITHIN LOD) IN THEIR ENTIRETY
88. DEBRIS – REMOVE IN ITS ENTIRETY
89. OVERHEAD WALKWAY – REMOVE IN ITS ENTIRETY
90. RETAINING WALL – REMOVE IN ITS ENTIRETY
91. RETAINING WALL – REMOVE IN ITS ENTIRETY
92. STEPS – REMOVE IN ITS ENTIRETY
93. RETAINING WALL – REMOVE IN ITS ENTIRETY
94. OVERHEAD PIPE – REMOVE IN ITS ENTIRETY
95. RETAINING WALL – REMOVE IN ITS ENTIRETY
96. RETAINING WALL – REMOVE IN ITS ENTIRETY
97. MANHOLE – REMOVE IN ITS ENTIRETY
98. CONCRETE STRUCTURES AND ASSOCIATED PIPES–REMOVE IN THEIR ENTIRETY
99. MISC. PIPE – REMOVE IN ITS ENTIRETY
100. SIDEWALK – REMOVE IN ITS ENTIRETY
101. MANHOLE AND PIPES – REMOVE IN ITS ENTIRETY AND PLUG PER NOTES
102. STORM DRAIN – REMOVE (110 LF WITHIN LOD) AND PLUG PER NOTES
103. TREE – REMOVE IN ITS ENTIRETY
104. SANITARY SEWER LINE – REMOVE (40 LF WITHIN LOD) AND CAP LINE AT BUILDING EXIT LOCATION
105. UTILITY MANHOLES AND PIPES – REMOVE IN THEIR ENTIRETY AND PLUG PER NOTES
106. STREAM CHANNEL – STREAM WILL BE REALIGNED WITH THE ADDITION OF 2–48" RCP CULVERTS
107. OVERHEAD WALKWAY – REMOVE IN ITS ENTIRETY
108. RETAINING WALL – REMOVE IN ITS ENTIRETY
109. RETAINING WALL – REMOVE IN ITS ENTIRETY
110. CONCRETE PAD – REMOVE IN ITS ENTIRETY
111. OVERHEAD PIPE – REMOVE IN ITS ENTIRETY
112. STRUCTURE – REMOVE IN ITS ENTIRETY
113. PIPE – REMOVE IN ITS ENTIRETY
114. RETAINING WALL – REMOVE IN ITS ENTIRETY
115. PIPE – REMOVE IN ITS ENTIRETY
116. 2–48" STORM CULVERTS – REMOVE AND REPLACE (SEE DESIGN CULVERTS)
117. SANITARY SEWER LINE – REMOVE (540 LF WITHIN LOD) AND PLUG PER NOTES
118. HYDROCHLORIC ACID LINE – REMOVE (540 LF WITHIN LOD) AND PLUG PER NOTES
119. UTILITY POLE – TO BE RELOCATED
120. FENCE – REMOVE (40 LF) IN ITS ENTIRETY (INCLUDES POST FOOTINGS)
121. UNPAVED ROAD – REMOVE (460 SF) IN ITS ENTIRETY
122. ZINC LINE – REMOVE (35 LF WITHIN LOD) AND PLUG PER NOTES
123. FENCE – REMOVE (300 LF) IN ITS ENTIRETY (INCLUDES POST FOOTINGS)
124. FORMER KEROSENE KY STORAGE TANK (APPROXIMATE LOCATION) – REMOVE IN ITS ENTIRETY
125. SAWCUT THROUGH CONCRETE PAD AT 2' OFFSET FROM BUILDING #29B AND RETAINING WALL (SEE DEMOLITION LEGEND ITEM NUMBER 126)
126. LEAVE 166 FT OF 4 FT HIGH RETAINING WALL IN PLACE

BLACK & VEATCH
Federal Services Div.
200 BELLEVUE PARKWAY, STATION PLACE, SUITE 215
WILMINGTON, DELAWARE 19809
PHONE: (302) 798-0200 FAX: (302) 798-0201
WEBSITE: WWW.BV.COM

Rev.	Description	Date	Apr.
1	Renewed E&S Permit	2/12/14	---
2	---	---	---
3	---	---	---
4	---	---	---
5	---	---	---
6	---	---	---
7	---	---	---
8	---	---	---

Date: 02/12/2014 | Drawn by: GEH | Check by: GEH
Project #: 042403 | Design by: GEH | Review by: KSN

STATE OF DELAWARE
DEPARTMENT OF NATURAL RESOURCES AND ENVIRONMENTAL CONTROL
DIVISION OF PARKS AND RECREATION & AUBURN VILLAGE LLC
NVF PROPERTIES
NVF YORKLYN SITE (DE-0071) YORKLYN, DELAWARE

EROSION AND SEDIMENT CONTROL PLAN

DEMOLITION PLAN

DRAWING NO.
C-104

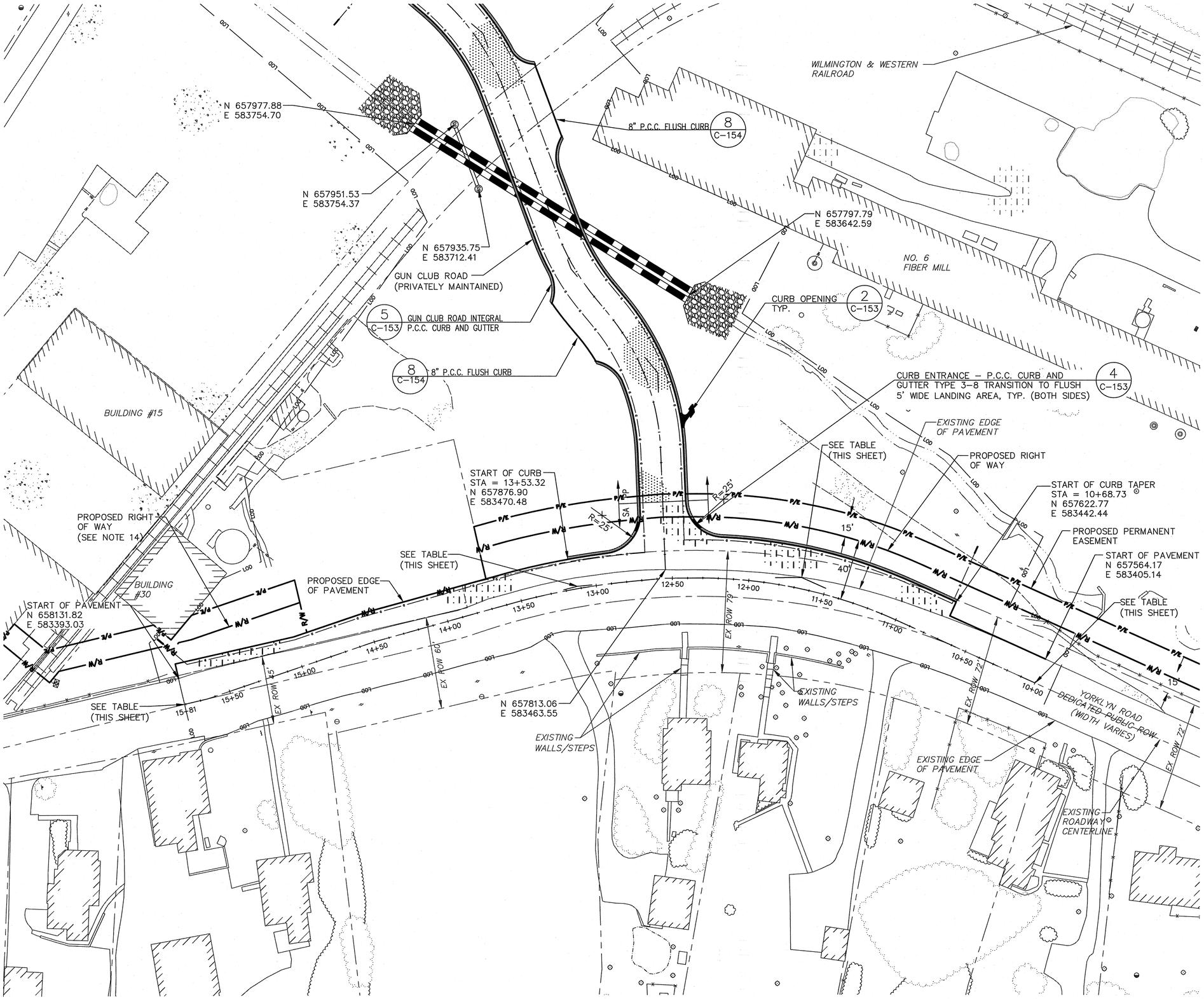

NOTES:

1. SEE SHEET C-100 FOR CIVIL LEGEND AND GENERAL NOTES.
2. SEE SHEET C-101 FOR PROJECT KEY PLAN.
3. SEE SHEET C-102 FOR EXISTING SITE SURVEY.
4. SEE SHEET C-103 FOR CONSTRUCTION LIMITS.
5. SEE SHEET C-104 FOR DEMOLITION PLAN.
6. SEE SHEETS C-115 AND C-116 FOR UTILITY PLANS.
7. SEE SHEETS C-120 AND C-121 FOR GRADING PLANS.
8. SEE SHEETS C-130 AND C-131 FOR SIGNING AND STRIPING PLANS.
9. SEE SHEET C-135 FOR PERMANENT EROSION AND SEDIMENT CONTROL PLAN.
10. SEE SHEET C-140 FOR GUN CLUB ROAD PROFILE AND CROSS SECTIONS.
11. SEE SHEET C-141 FOR DRAINAGE PROFILES.
12. SEE SHEET C-142 FOR ENTRANCE CROSS SECTIONS.
13. SEE SHEETS C-150 TO C-158 FOR CONSTRUCTION DETAILS.
14. AN ADDITIONAL 40 FEET OF RIGHT-OF-WAY IS HEREBY DEDICATED TO THE STATE OF DELAWARE AS PER THIS PLAT.
15. PROPOSED RIGHT OF WAY CONTINGENT UPON COMPLETION OF BUILDING DEMOLITION BY DNREC OR OTHERS.
16. A 15 FOOT WIDE PERMANENT EASEMENT IS HEREBY ESTABLISHED AS PER THIS PLAT.

Yorklyn Road Road Horizontal Alignment Data

Point Type	Station	Northing	Easting	Radius	Tangent Length	Delta / Theta
POB	10+00.00	657,571.11	583,389.67			
PI	10+56.75	657,622.88	583,412.90			
PC	10+98.74	657,661.20	583,430.09			
PI	11+67.41	657,723.86	583,458.19	319	135.28	24°17'52.5470"
CC		657,791.76	583,139.03			
PT	12+34.02	657,792.53	583,458.03			
PI	12+54.59	657,813.10	583,457.98			
PC	12+74.64	657,833.07	583,456.19			
PI	13+12.22	657,870.50	583,452.85	462	75.00	9°18'04.5464"
CC		657,791.95	582,996.02			
PT	13+49.64	657,906.90	583,443.49			
PI	14+49.62	658,003.26	583,416.85			
PI	15+65.14	658,112.67	583,379.75			
POE	15+80.74	658,127.85	583,376.17			

0' 30' 90'

SCALE: 1" – 30'

BLACK & VEATCH
Federal Services Div.
200 BELLEVUE PARKWAY, SUITE 215
WILMINGTON, DELAWARE
PHONE: (302) 798-0300 FAX: (302) 798-0301
WEBSITE: WWW.BV.COM

Rev.	Description	Date	Apr.
8	---	---	---
7	---	---	---
6	---	---	---
5	---	---	---
4	---	---	---
3	---	---	---
2	---	---	---
1	Renewed B&S Permit.	2/12/14	---

Date: 02/12/2014 Drawn by: NJS Check by: GEH
Project #: 042403 Design by: GEH Review by: HJW

STATE OF DELAWARE
DEPARTMENT OF NATURAL RESOURCES AND ENVIRONMENTAL CONTROL
DIVISION OF PARKS AND RECREATION & AUBURN VILLAGE LLC

NVF PROPERTIES
NVF YORKLYN SITE (DE-0071) YORKLYN, DELAWARE

EROSION AND SEDIMENT CONTROL PLAN

ENTRANCE SITE LAYOUT

DRAWING NO.
C-110

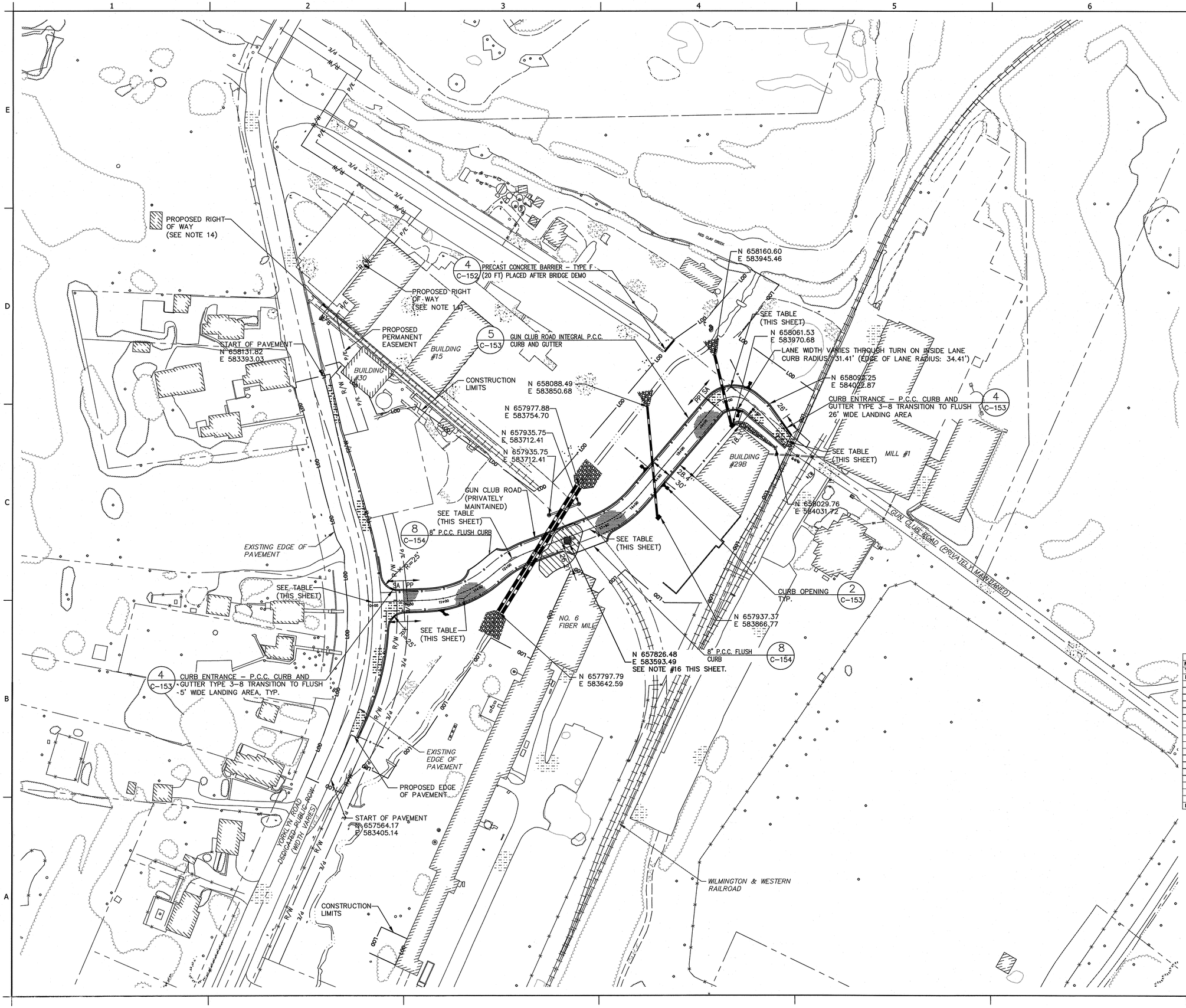

NOTES:

1. SEE SHEET C-100 FOR CIVIL LEGEND AND GENERAL NOTES.
2. SEE SHEET C-101 FOR PROJECT KEY PLAN.
3. SEE SHEET C-102 FOR EXISTING SITE SURVEY.
4. SEE SHEET C-103 FOR CONSTRUCTION LIMITS.
5. SEE SHEET C-104 FOR DEMOLITION PLAN.
6. SEE SHEETS C-115 AND C-116 FOR UTILITY PLANS.
7. SEE SHEETS C-120 AND C-121 FOR GRADING PLANS.
8. SEE SHEETS C-130 AND C-131 FOR SIGNING AND STRIPING PLANS.
9. SEE SHEET C-135 FOR PERMANENT EROSION AND SEDIMENT CONTROL PLAN.
10. SEE SHEET C-140 FOR GUN CLUB ROAD PROFILE AND CROSS SECTIONS.
11. SEE SHEET C-141 FOR DRAINAGE PROFILES.
12. SEE SHEET C-142 FOR ENTRANCE CROSS SECTIONS.
13. SEE SHEETS C-150 TO C-158 FOR CONSTRUCTION DETAILS.
14. AN ADDITIONAL 40 FEET OF RIGHT-OF-WAY IS HEREBY DEDICATED TO THE STATE OF DELAWARE AS PER THIS PLAT.
15. PROPOSED RIGHT OF WAY CONTINGENT UPON COMPLETION OF BUILDING DEMOLITION BY DNREC OR OTHERS.
16. BLACK & VEATCH SHALL HAVE A GEOTECHNICAL ENGINEER LICENSED IN THE STATE OF DELAWARE AS A PROFESSIONAL ENGINEER EXAMINE THE SUBGRADE IN THE AREA INDICATED TO DETERMINE SUITABILITY AS ROAD SUBGRADE. GEOTECHNICAL ENGINEER SHALL DETERMINE IF OVER-EXCAVATION AND BACKFILL IS REQUIRED TO SUPPORT THE PROPOSED ROAD. OVER-EXCAVATION IN THIS AREA SHALL BE COVERED BY THE UNIT PRICE BID ITEM IDENTIFIED IN THE SPECIFICATIONS. BACKFILL SHALL CONSIST OF SUITABLE SOIL COMPACTED TO 95% MAXIMUM DENSITY AS REQUIRED BY THE SPECIFICATIONS FOR FILL USED AS ROAD SUBGRADE. CONTRACTOR SHALL NOTIFY BLACK & VEATCH A MINIMUM OF ONE WEEK BEFORE EXCAVATION IN THIS AREA.

■ N 657826.48
E 583593.49

Gun Club Road Horizontal Alignment Data

Point Type	Station	Northing	Easting	Radius	Tangent Length	Delta / Theta
POB	10+00.00	657,813.06	583,463.55			
PC	10+77.72	657,816.20	583,541.19			
PI	11+28.88	657,818.27	583,592.31	150	98.60	37°39'51.0872"
CC		657,966.07	583,535.12			
PT	11+76.33	657,851.14	583,631.51			
PC	11+87.92	657,858.59	583,640.39			
PI	12+13.51	657,875.03	583,660.00	150	50.69	19°21'42.0437"
CC		657,743.65	583,736.77			
PT	12+38.61	657,884.04	583,683.95			
PC	13+38.10	657,919.08	583,777.06			
PI	13+77.28	657,932.88	583,813.74	150	76.66	29°16'56.1013"
CC		658,059.47	583,724.23			
PT	14+14.76	657,962.85	583,838.98			
PC	15+80.49	658,089.63	583,945.72			
PC	15+80.49	658,089.63	583,945.72			
PI	16+15.43	658,116.36	583,968.23	35	54.93	89°54'55.1079"
CC		658,067.08	583,972.49			
PT	16+35.41	658,093.89	583,995.00			
PI	16+57.60	658,079.62	584,011.99			
POE	17+12.77	658,038.92	584,049.24			

BLACK & VEATCH
Federal Services Div.
200 BELLEVUE PARKWAY, SUITE 215
WILMINGTON, DELAWARE 19809-3705
PHONE: (302) 798-0300 FAX: (302) 798-0301
WEBSITE: WWW.BV.COM

Rev.	Description	Date	Apr.
8	---	---	---
7	---	---	---
6	---	---	---
5	---	---	---
4	---	---	---
3	---	---	---
2	---	---	---
1	Reviewed B&S Permit	2/12/14	---

Date: 02/12/2014 | Drawn by: NJS | Check by: GEH
Project #: 142403 | Design by: GEH | Review by: NVH

STATE OF DELAWARE
DEPARTMENT OF NATURAL RESOURCES AND ENVIRONMENTAL CONTROL
DIVISION OF PARKS AND RECREATION & AUBURN VILLAGE LLC

NVF PROPERTIES
NVF YORKLYN SITE (DE-0071) YORKLYN, DELAWARE

EROSION AND SEDIMENT CONTROL PLAN

GUN CLUB ROAD
SITE LAYOUT

DRAWING NO.
C-111

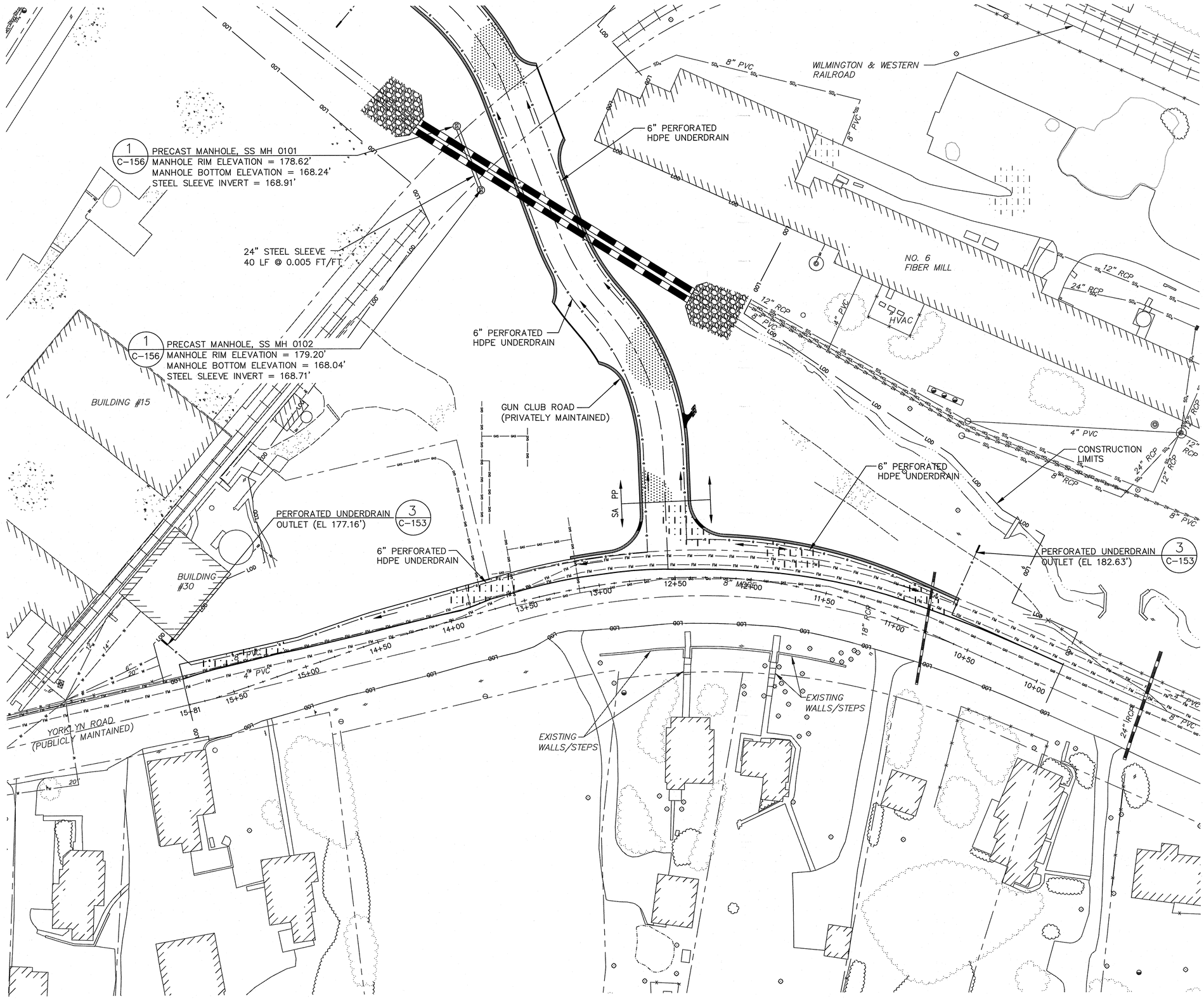

NOTES:

1. SEE SHEET C-100 FOR CIVIL LEGEND AND GENERAL NOTES.
2. SEE SHEET C-101 FOR PROJECT KEY PLAN.
3. SEE SHEET C-102 FOR EXISTING SITE SURVEY.
4. SEE SHEET C-103 FOR CONSTRUCTION LIMITS.
5. SEE SHEET C-104 FOR DEMOLITION PLAN.
6. SEE SHEETS C-110 AND C-111 FOR SITE LAYOUTS.
7. SEE SHEETS C-120 AND C-121 FOR GRADING PLANS.
8. SEE SHEETS C-130 AND C-131 FOR SIGNING AND STRIPING PLANS.
9. SEE SHEET C-135 FOR PERMANENT EROSION AND SEDIMENT CONTROL PLAN.
10. SEE SHEET C-140 FOR GUN CLUB ROAD PROFILE AND CROSS SECTIONS.
11. SEE SHEET C-141 FOR DRAINAGE PROFILES.
12. SEE SHEET C-142 FOR ENTRANCE CROSS SECTIONS.
13. SEE SHEETS C-150 TO C-158 FOR CONSTRUCTION DETAILS.

0' 30' 90'

SCALE: 1" – 30'

BLACK & VEATCH
Federal Services Div.
800 DELAWARE PARKWAY, SUITE 215
WILMINGTON, DELAWARE
PHONE: (302) 798-0200 FAX: (302) 798-0201
WEBSITE: WWW.BV.COM

Rev.	Description	Date	Apr.
1	Renewed E&S Permit	2/12/14	
2	---	---	---
3	---	---	---
4	---	---	---
5	---	---	---
6	---	---	---
7	---	---	---
8	---	---	---

Date: 02/12/2014 | Drawn by: NJS | Check by: GEH
Project #: 042403 | Design by: GEH | Review by: MJN

STATE OF DELAWARE
DEPARTMENT OF NATURAL RESOURCES AND ENVIRONMENTAL CONTROL
DIVISION OF PARKS AND RECREATION & AUBURN VILLAGE LLC

NVF PROPERTIES
NVF YORKLYN SITE (DE-0071) YORKLYN, DELAWARE

EROSION AND SEDIMENT CONTROL PLAN

ENTRANCE UTILITY PLAN

DRAWING NO.
C-115

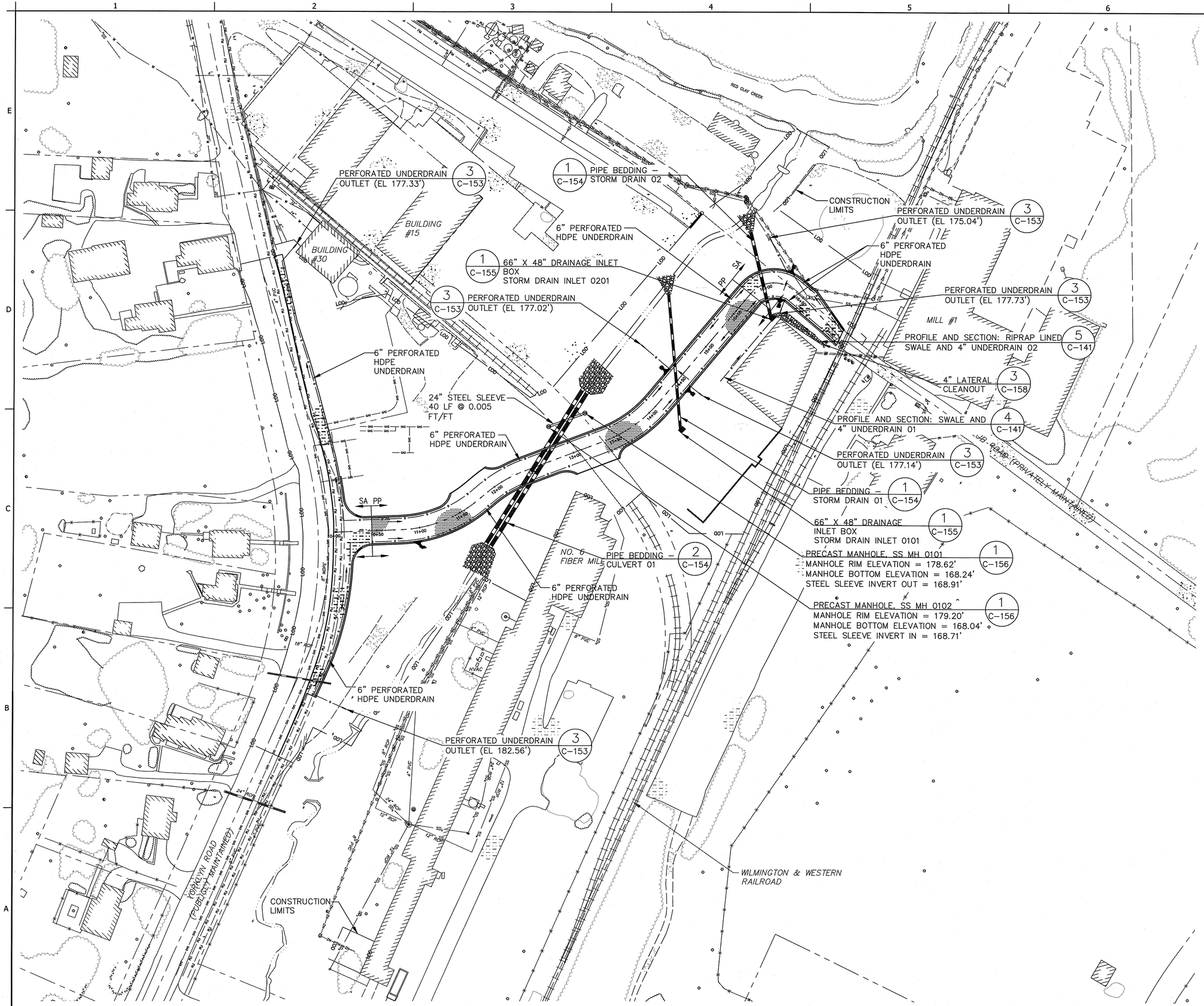

NOTES:

1. SEE SHEET C-100 FOR CIVIL LEGEND AND GENERAL NOTES.
2. SEE SHEET C-101 FOR PROJECT KEY PLAN.
3. SEE SHEET C-102 FOR EXISTING SITE SURVEY.
4. SEE SHEET C-103 FOR CONSTRUCTION LIMITS.
5. SEE SHEET C-104 FOR DEMOLITION PLAN.
6. SEE SHEETS C-110 AND C-111 FOR SITE LAYOUTS.
7. SEE SHEETS C-120 AND C-121 FOR GRADING PLANS.
8. SEE SHEETS C-130 AND C-131 FOR SIGNING AND STRIPING PLANS.
9. SEE SHEET C-135 FOR PERMANENT EROSION AND SEDIMENT CONTROL PLAN.
10. SEE SHEET C-140 FOR GUN CLUB ROAD PROFILE AND CROSS SECTIONS.
11. SEE SHEET C-141 FOR DRAINAGE PROFILES.
12. SEE SHEET C-142 FOR ENTRANCE CROSS SECTIONS.
13. SEE SHEETS C-150 TO C-158 FOR CONSTRUCTION DETAILS.

BLACK & VEATCH
Federal Services Div.
200 BELLEVUE PARKWAY, SUITE 215
WILMINGTON, DELAWARE
PHONE: (302) 798-0201 FAX: (302) 798-0201
WEBSITE: WWW.BV.COM

Rev.	Description	Date	Apr.
1	Renewed E&S Permit	2/12/14	---
2	---	---	---
3	---	---	---
4	---	---	---
5	---	---	---
6	---	---	---
7	---	---	---
8	---	---	---

Date: 02/12/2014 | Drawn by: NJS | Check by: GEH
Project #: 042403 | Design by: GEH | Review by: KJN

STATE OF DELAWARE
DEPARTMENT OF NATURAL RESOURCES AND ENVIRONMENTAL CONTROL
DIVISION OF PARKS AND RECREATION & AUBURN VILLAGE LLC

NVF PROPERTIES
NVF YORKLYN SITE (DE-0071) YORKLYN, DELAWARE

EROSION AND SEDIMENT CONTROL PLAN

GUN CLUB ROAD
UTILITY PLAN

DRAWING NO.
C-116

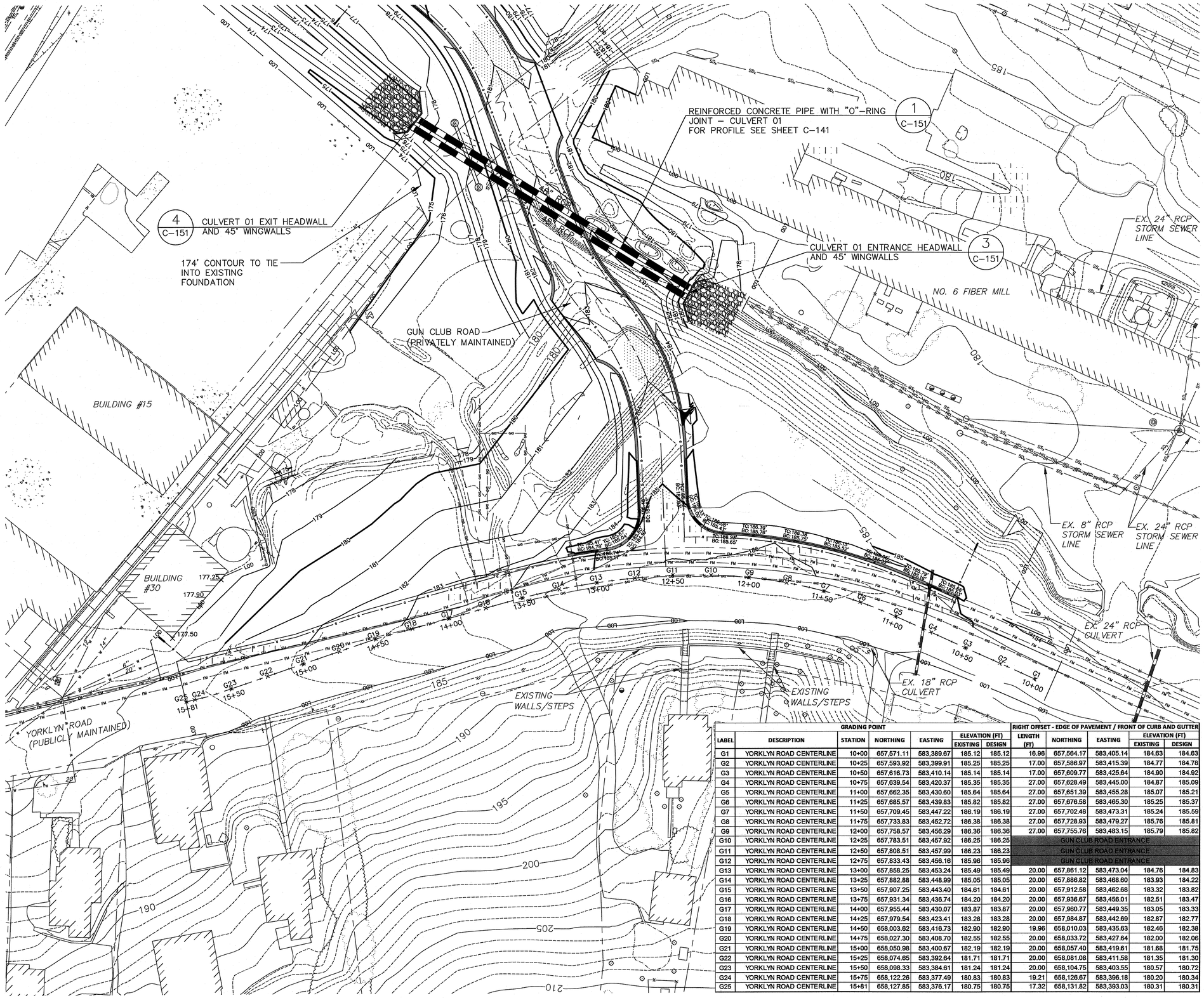

GRADING POINT							RIGHT OFFSET - EDGE OF PAVEMENT / FRONT OF CURB AND GUTTER				
LABEL	DESCRIPTION	STATION	NORTHING	EASTING	ELEVATION (FT)		LENGTH (FT)	NORTHING	EASTING	ELEVATION (FT)	
					EXISTING	DESIGN				EXISTING	DESIGN
G1	YORKLYN ROAD CENTERLINE	10+00	657,571.11	583,389.67	185.12	185.12	16.96	657,564.17	583,405.14	184.63	184.63
G2	YORKLYN ROAD CENTERLINE	10+25	657,593.92	583,399.91	185.25	185.25	17.00	657,586.97	583,415.39	184.77	184.78
G3	YORKLYN ROAD CENTERLINE	10+50	657,616.73	583,410.14	185.14	185.14	17.00	657,609.77	583,425.64	184.90	184.92
G4	YORKLYN ROAD CENTERLINE	10+75	657,639.54	583,420.37	185.35	185.35	27.00	657,628.49	583,445.00	184.87	185.09
G5	YORKLYN ROAD CENTERLINE	11+00	657,662.35	583,430.60	185.64	185.64	27.00	657,651.39	583,455.28	185.07	185.21
G6	YORKLYN ROAD CENTERLINE	11+25	657,685.57	583,439.83	185.82	185.82	27.00	657,676.58	583,465.30	185.25	185.37
G7	YORKLYN ROAD CENTERLINE	11+50	657,709.45	583,447.22	186.19	186.19	27.00	657,702.48	583,473.31	185.24	185.59
G8	YORKLYN ROAD CENTERLINE	11+75	657,733.83	583,452.72	186.38	186.38	27.00	657,728.93	583,479.27	185.76	185.81
G9	YORKLYN ROAD CENTERLINE	12+00	657,758.57	583,456.29	186.36	186.36	27.00	657,755.76	583,483.15	185.79	185.82
G10	YORKLYN ROAD CENTERLINE	12+25	657,783.51	583,457.92	186.25	186.25	GUN CLUB ROAD ENTRANCE				
G11	YORKLYN ROAD CENTERLINE	12+50	657,808.51	583,457.99	186.23	186.23	GUN CLUB ROAD ENTRANCE				
G12	YORKLYN ROAD CENTERLINE	12+75	657,833.43	583,456.16	185.96	185.96	GUN CLUB ROAD ENTRANCE				
G13	YORKLYN ROAD CENTERLINE	13+00	657,858.25	583,453.24	185.49	185.49	20.00	657,861.12	583,473.04	184.76	184.83
G14	YORKLYN ROAD CENTERLINE	13+25	657,882.88	583,448.99	185.05	185.05	20.00	657,886.82	583,468.60	183.93	184.22
G15	YORKLYN ROAD CENTERLINE	13+50	657,907.25	583,443.40	184.61	184.61	20.00	657,912.58	583,462.68	183.32	183.82
G16	YORKLYN ROAD CENTERLINE	13+75	657,931.34	583,436.74	184.20	184.20	20.00	657,936.67	583,456.01	182.51	183.47
G17	YORKLYN ROAD CENTERLINE	14+00	657,955.44	583,430.07	183.87	183.87	20.00	657,960.77	583,449.35	183.05	183.33
G18	YORKLYN ROAD CENTERLINE	14+25	657,979.54	583,423.41	183.28	183.28	20.00	657,984.87	583,442.69	182.87	182.77
G19	YORKLYN ROAD CENTERLINE	14+50	658,003.62	583,416.73	182.90	182.90	19.96	658,010.03	583,435.63	182.46	182.38
G20	YORKLYN ROAD CENTERLINE	14+75	658,027.30	583,408.70	182.55	182.55	20.00	658,033.72	583,427.64	182.00	182.06
G21	YORKLYN ROAD CENTERLINE	15+00	658,050.98	583,400.67	182.19	182.19	20.00	658,057.40	583,419.61	181.68	181.75
G22	YORKLYN ROAD CENTERLINE	15+25	658,074.65	583,392.64	181.71	181.71	20.00	658,081.08	583,411.58	181.35	181.30
G23	YORKLYN ROAD CENTERLINE	15+50	658,098.33	583,384.61	181.24	181.24	20.00	658,104.75	583,403.55	180.57	180.72
G24	YORKLYN ROAD CENTERLINE	15+75	658,122.26	583,377.49	180.83	180.83	19.21	658,126.67	583,396.18	180.20	180.34
G25	YORKLYN ROAD CENTERLINE	15+81	658,127.85	583,376.17	180.75	180.75	17.32	658,131.82	583,393.03	180.31	180.31

NOTES:

1. SEE SHEET C-100 FOR CIVIL LEGEND AND GENERAL NOTES.
2. SEE SHEET C-101 FOR PROJECT KEY PLAN.
3. SEE SHEET C-102 FOR EXISTING SITE SURVEY.
4. SEE SHEET C-103 FOR CONSTRUCTION LIMITS.
5. SEE SHEET C-104 FOR DEMOLITION PLAN.
6. SEE SHEETS C-110 AND C-111 FOR SITE LAYOUTS.
7. SEE SHEETS C-115 AND C-116 FOR UTILITY PLANS.
8. SEE SHEETS C-130 AND C-131 FOR SIGNING AND STRIPING PLANS.
9. SEE SHEET C-135 FOR PERMANENT EROSION AND SEDIMENT CONTROL PLAN.
10. SEE SHEET C-140 FOR GUN CLUB ROAD PROFILE AND CROSS SECTIONS.
11. SEE SHEET C-141 FOR DRAINAGE PROFILES.
12. SEE SHEET C-142 FOR ENTRANCE CROSS SECTIONS.
13. SEE SHEETS C-150 TO C-158 FOR CONSTRUCTION DETAILS.

0' 30' 90'

SCALE: 1" – 30'

BLACK & VEATCH
Federal Services Div.
800 DELAWARE PARKWAY, SUITE 215
WILMINGTON, DELAWARE
PHONE: (302) 798-0200 FAX: (302) 798-0201
WEBSITE: WWW.BV.COM

Rev.	Description	Date	Apr.
1	Reissued E&S Permit	2/13/14	---
2	---	---	---
3	---	---	---
4	---	---	---
5	---	---	---
6	---	---	---
7	---	---	---
8	---	---	---

Date: 02/12/2014 | Drawn by: NJS | Check by: GEH
Project #: 042403 | Design by: GEH | Review by: MJN

STATE OF DELAWARE
DEPARTMENT OF NATURAL RESOURCES AND ENVIRONMENTAL CONTROL
DIVISION OF PARKS AND RECREATION & AUBURN VILLAGE LLC

NVF PROPERTIES
NVF YORKLYN SITE (DE-0071) YORKLYN, DELAWARE

EROSION AND SEDIMENT CONTROL PLAN

ENTRANCE GRADING PLAN

DRAWING NO.
C-120

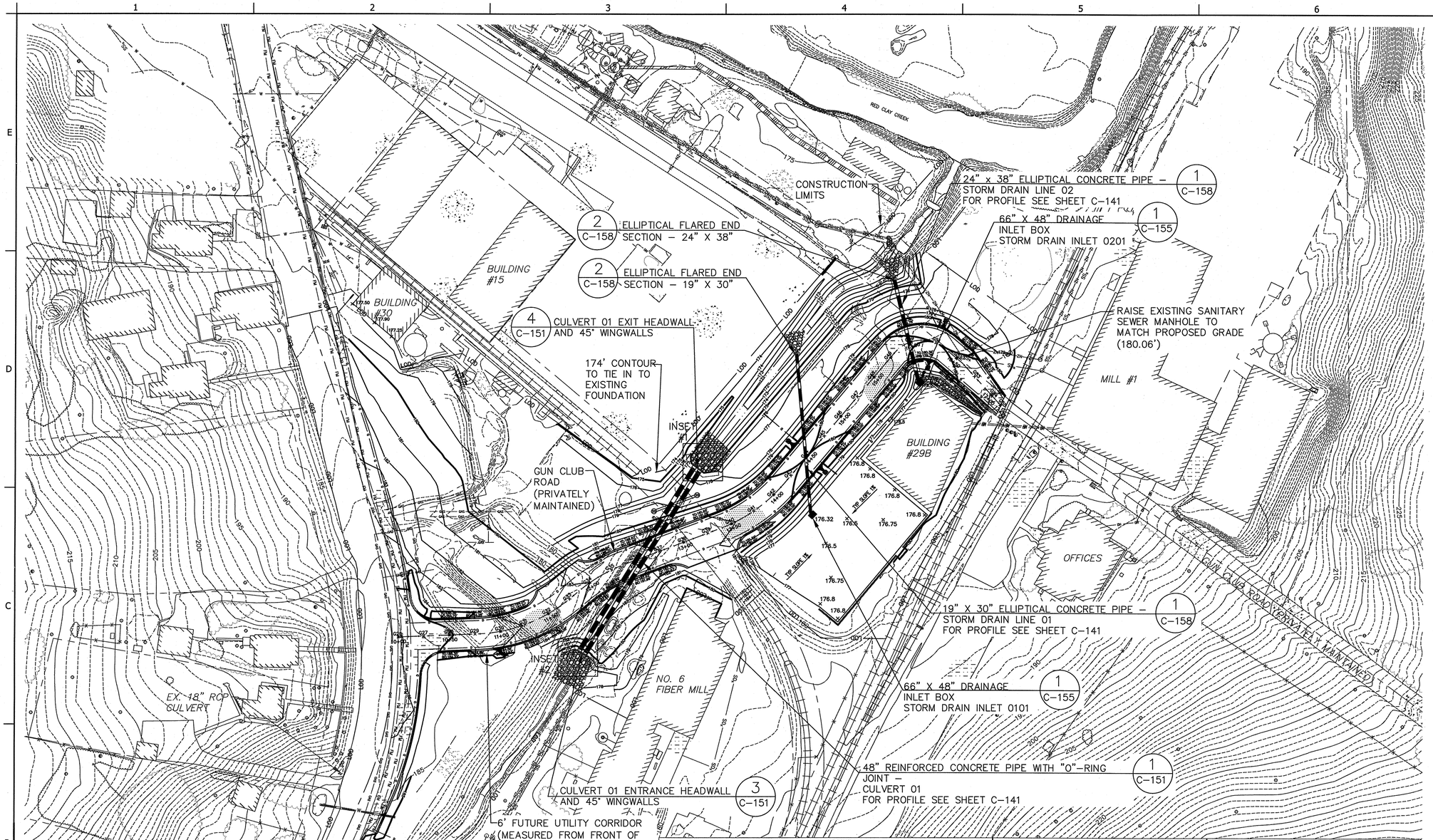

GRADING POINT							LEFT OFFSET - EDGE OF PAVEMENT / FRONT OF CURB AND GUTTER					RIGHT OFFSET - EDGE OF PAVEMENT / FRONT OF CURB AND GUTTER				
LABEL	DESCRIPTION	STATION	NORTHING	EASTING	ELEVATION (FT)		LENGTH (FT)	NORTHING	EASTING	ELEVATION (FT)		LENGTH (FT)	NORTHING	EASTING	ELEVATION (FT)	
					EXISTING	DESIGN				EXISTING	DESIGN				EXISTING	DESIGN
G26	GUN CLUB ROAD CENTERLINE	10+00	657,812.83	583,463.56	186.06	186.06	GUN CLUB ROAD ENTRANCE					GUN CLUB ROAD ENTRANCE				
G27	GUN CLUB ROAD CENTERLINE	10+25	657,814.07	583,488.53	185.41	185.58	GUN CLUB ROAD ENTRANCE					GUN CLUB ROAD ENTRANCE				
G28	GUN CLUB ROAD CENTERLINE	10+50	657,815.08	583,513.51	184.93	185.08	15.00	657,830.06	583,512.90	186.13	184.78	15.00	657,800.09	583,514.11	185.04	184.78
G29	GUN CLUB ROAD CENTERLINE	10+75	657,816.09	583,538.49	187.94	184.62	15.00	657,831.08	583,537.88	188.13	184.32	15.00	657,801.10	583,539.09	184.90	184.32
G30	GUN CLUB ROAD CENTERLINE	11+00	657,818.75	583,563.32	186.28	184.29	15.00	657,833.48	583,560.50	183.66	183.99	15.00	657,804.02	583,566.14	185.49	183.99
G31	GUN CLUB ROAD CENTERLINE	11+25	657,825.47	583,587.37	178.05	183.97	15.00	657,839.53	583,582.14	178.03	183.67	15.00	657,811.41	583,592.59	181.84	183.67
G32	GUN CLUB ROAD CENTERLINE	11+50	657,836.08	583,609.97	177.60	183.65	22.10	657,855.24	583,598.94	177.60	183.52	15.00	657,823.08	583,617.46	181.90	183.35
G33	GUN CLUB ROAD CENTERLINE	11+75	657,850.30	583,630.50	181.26	183.32	25.00	657,869.60	583,614.60	178.53	183.22	15.00	657,838.72	583,640.04	179.94	183.02
G34	GUN CLUB ROAD CENTERLINE	12+00	657,865.98	583,649.96	180.01	183.00	25.00	657,886.37	583,635.49	178.93	182.90	15.00	657,853.74	583,658.64	177.58	182.70
G35	GUN CLUB ROAD CENTERLINE	12+25	657,876.68	583,671.46	178.40	182.68	15.00	657,892.19	583,664.93	177.93	182.38	15.00	657,865.18	583,677.99	175.29	182.38
G36	GUN CLUB ROAD CENTERLINE	12+50	657,888.06	583,694.62	174.80	182.35	15.00	657,902.10	583,689.34	177.60	182.05	15.00	657,874.02	583,699.91	175.37	182.05
G37	GUN CLUB ROAD CENTERLINE	12+75	657,896.86	583,718.02	173.88	182.03	15.00	657,910.90	583,712.74	173.80	181.73	15.00	657,882.82	583,723.30	176.57	181.73
G38	GUN CLUB ROAD CENTERLINE	13+00	657,905.67	583,741.42	176.94	181.71	15.00	657,919.71	583,736.14	175.98	181.41	25.00	657,882.27	583,750.22	177.74	181.61
G39	GUN CLUB ROAD CENTERLINE	13+25	657,914.47	583,764.82	175.16	181.38	15.00	657,928.51	583,759.54	174.14	181.08	25.00	657,891.07	583,773.62	174.00	181.29
G40	GUN CLUB ROAD CENTERLINE	13+50	657,923.71	583,788.04	177.00	181.06	15.00	657,937.29	583,781.66	177.00	180.76	15.00	657,910.14	583,794.42	177.00	180.76
G41	GUN CLUB ROAD CENTERLINE	13+75	657,936.18	583,809.67	177.00	180.74	15.00	657,948.51	583,801.13	177.00	180.44	15.00	657,923.85	583,818.22	177.00	180.44
G42	GUN CLUB ROAD CENTERLINE	14+00	657,952.06	583,828.94	177.00	180.41	15.00	657,962.80	583,818.47	177.00	180.12	15.00	657,941.32	583,839.41	177.00	180.11
G43	GUN CLUB ROAD CENTERLINE	14+25	657,970.70	583,845.58	177.00	180.11	15.00	657,980.36	583,834.11	177.00	179.81	15.00	657,961.04	583,857.06	177.00	179.81
G44	GUN CLUB ROAD CENTERLINE	14+50	657,989.83	583,861.69	177.00	180.00	15.00	657,999.49	583,850.21	177.00	179.70	15.00	657,980.16	583,873.16	177.00	179.70
G45	GUN CLUB ROAD CENTERLINE	14+75	658,008.95	583,877.79	177.00	180.13	15.00	658,018.61	583,866.31	177.00	179.83	15.00	657,999.29	583,889.26	177.00	179.83
G46	GUN CLUB ROAD CENTERLINE	15+00	658,028.07	583,893.89	177.00	180.36	15.00	658,037.73	583,882.42	177.00	180.06	15.00	658,018.41	583,905.37	177.00	180.06
G47	GUN CLUB ROAD CENTERLINE	15+25	658,047.20	583,909.99	173.66	180.59	15.00	658,056.86	583,898.52	173.21	180.29	15.00	658,037.54	583,921.47	174.00	180.29
G48	GUN CLUB ROAD CENTERLINE	15+50	658,066.32	583,926.10	173.68	180.75	15.00	658,075.98	583,914.62	173.44	180.45	15.00	658,056.66	583,937.57	174.00	180.45
G49	GUN CLUB ROAD CENTERLINE	15+75	658,085.44	583,942.20	174.99	180.47	15.00	658,095.11	583,930.72	174.42	180.17	15.00	658,075.78	583,953.67	175.02	180.17
G50	GUN CLUB ROAD CENTERLINE	16+00	658,100.38	583,961.72	176.79	180.12	15.00	658,114.66	583,957.10	176.47	179.82	16.37	658,086.11	583,966.34	176.85	179.82
G51	GUN CLUB ROAD CENTERLINE	16+25	658,099.30	583,986.17	178.24	180.00	15.00	658,113.11	583,992.03	177.75	179.70	16.74	658,085.49	583,980.31	178.23	179.70
G52	GUN CLUB ROAD CENTERLINE	16+50	658,084.50	584,006.18	179.52	180.12	15.00	658,095.99	584,015.83	178.85	179.82	15.00	658,073.01	583,996.54	179.35	179.82
G53	GUN CLUB ROAD CENTERLINE	16+75	658,066.77	584,023.75	180.46	180.47	12.52	658,075.23	584,032.99	180.08	180.19	12.83	658,058.11	584,014.28	180.09	180.18
G54	GUN CLUB ROAD CENTERLINE	17+00	658,048.33	584,040.63	181.26	181.07	9.49	658,054.74	584,047.63	180.99	180.85	9.73	658,041.76	584,033.45	180.82	180.85
G55	GUN CLUB ROAD CENTERLINE	17+13	658,038.92	584,049.24	181.47	181.47	N/A					8.67	658,033.07	584,042.84	181.10	181.27

NOTES:

1. SEE SHEET C-100 FOR CIVIL LEGEND AND GENERAL NOTES.
2. SEE SHEET C-101 FOR PROJECT KEY PLAN.
3. SEE SHEET C-102 FOR EXISTING SITE SURVEY.
4. SEE SHEET C-103 FOR CONSTRUCTION LIMITS.
5. SEE SHEET C-104 FOR DEMOLITION PLAN.
6. SEE SHEETS C-110 AND C-111 FOR SITE LAYOUTS.
7. SEE SHEETS C-115 AND C-116 FOR UTILITY PLANS.
8. SEE SHEETS C-130 AND C-131 FOR SIGNING AND STRIPING PLANS.
9. SEE SHEET C-135 FOR PERMANENT EROSION AND SEDIMENT CONTROL PLAN.
10. SEE SHEET C-140 FOR GUN CLUB ROAD PROFILE AND CROSS SECTIONS.
11. SEE SHEET C-141 FOR DRAINAGE PROFILES.
12. SEE SHEET C-142 FOR ENTRANCE CROSS SECTIONS.
13. SEE SHEETS C-150 TO C-158 FOR CONSTRUCTION DETAILS.

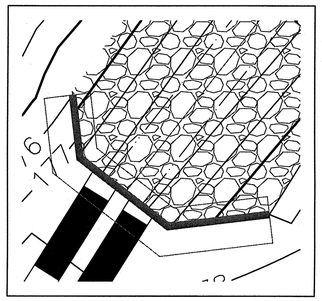

INSET #1
SCALE: 1" = 10'

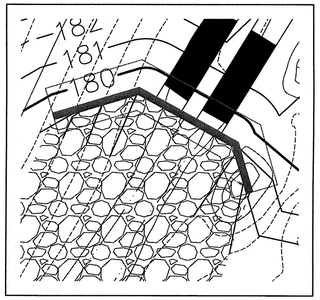

INSET #2
SCALE: 1" = 10'

0' 50' 150'
SCALE: 1" – 50'

BLACK & VEATCH
Federal Services Div.
200 BELLEVUE PARKWAY, SUITE 215
WILMINGTON, DELAWARE
PHONE: (302) 798-1200 FAX: (302) 798-0201
WEBSITE: WWW.BV.COM

Rev.	Description	Date	Apr.
1	Renewed E&S Permit	2/12/14	---
2	---	---	---
3	---	---	---
4	---	---	---
5	---	---	---
6	---	---	---
7	---	---	---
8	---	---	---

Date: 02/12/2014 | Drawn by: NVS | Check by: GEH
Project #: 092403 | Design by: GEH | Review by: MIN

STATE OF DELAWARE
DEPARTMENT OF NATURAL RESOURCES AND ENVIRONMENTAL CONTROL
DIVISION OF PARKS AND RECREATION & AUBURN VILLAGE LLC

NVF PROPERTIES
NVF YORKLYN SITE (DE-0071) YORKLYN, DELAWARE

EROSION AND SEDIMENT CONTROL PLAN

GUN CLUB ROAD
GRADING PLAN

DRAWING NO.
C-121

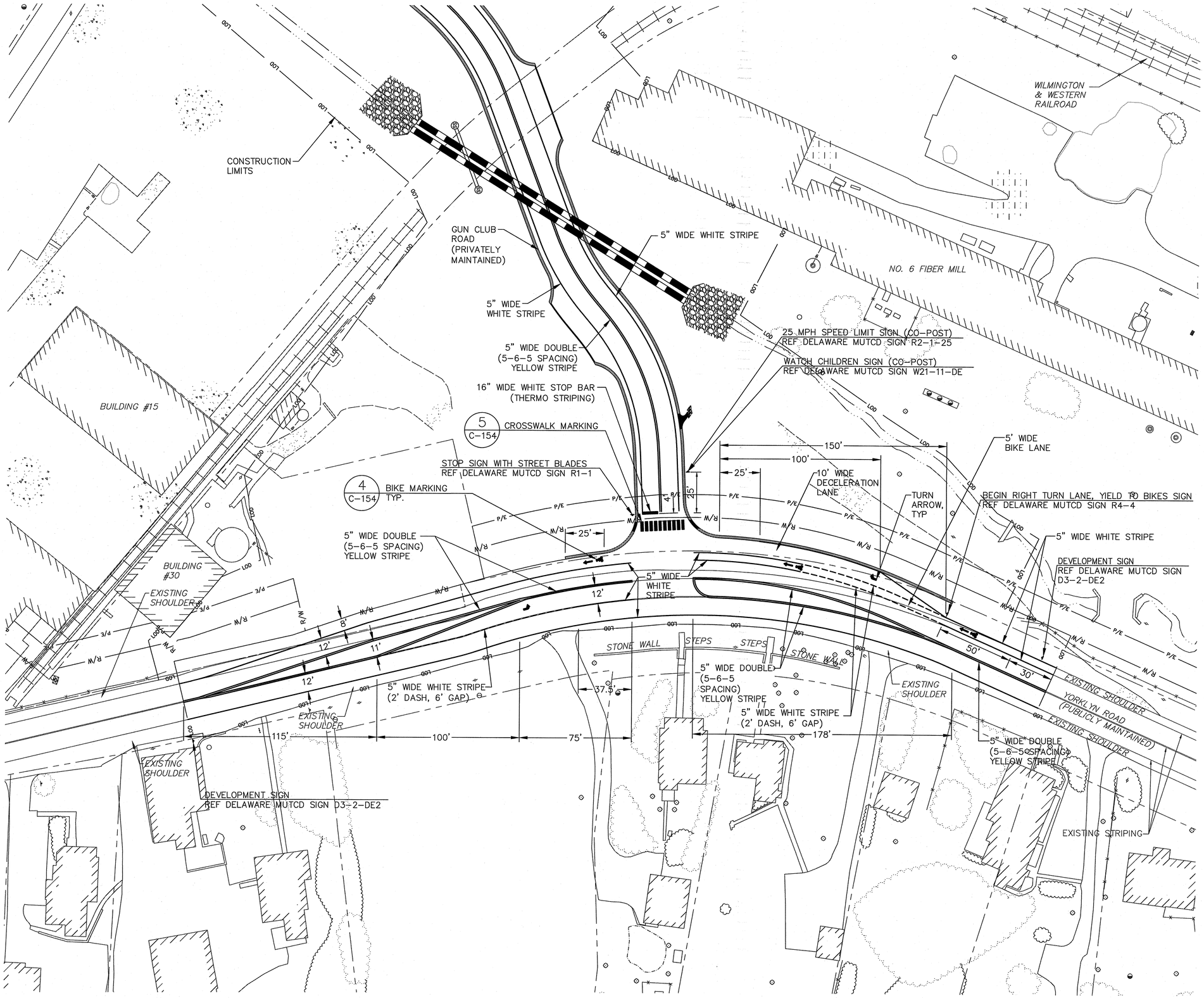

NOTES:

1. SEE SHEET C-100 FOR CIVIL LEGEND AND GENERAL NOTES.
2. SEE SHEET C-101 FOR PROJECT KEY PLAN.
3. SEE SHEET C-102 FOR EXISTING SITE SURVEY.
4. SEE SHEET C-103 FOR CONSTRUCTION LIMITS.
5. SEE SHEET C-104 FOR DEMOLITION PLAN.
6. SEE SHEETS C-110 AND C-111 FOR SITE LAYOUTS.
7. SEE SHEETS C-115 AND C-116 FOR UTILITY PLANS.
8. SEE SHEETS C-120 AND C-121 FOR GRADING PLANS.
9. SEE SHEET C-135 FOR PERMANENT EROSION AND SEDIMENT CONTROL PLAN.
10. SEE SHEET C-140 FOR GUN CLUB ROAD PROFILE AND CROSS SECTIONS.
11. SEE SHEET C-141 FOR DRAINAGE PROFILES.
12. SEE SHEET C-142 FOR ENTRANCE CROSS SECTIONS.
13. SEE SHEETS C-150 TO C-158 FOR CONSTRUCTION DETAILS.
14. REFERENCE DELAWARE MUTCD FIGURE 3B-11 (SHEET 4 OF 5) FOR RIGHT TURN LANE STRIPING AND MARKINGS.
15. REFERENCE DELAWARE MUTCD FIGURE 9C-1F FOR BIKE LANE STRIPING AND MARKINGS.
16. ALL PROPOSED SIGNS SHALL BE INSTALLED ON A BREAKAWAY SIGN POST (SEE SHEET C-154, DETAIL 3).

BLACK & VEATCH
Federal Services Div.
200 BELLEVUE PARKWAY, SUITE 216
WILMINGTON, DELAWARE
PHONE: (302) 798-0200 FAX: (302) 798-0201
WEBSITE: WWW.BV.COM

Rev.	Description	Date	Apr.
1	Renewed B&S Permit	2/12/14	---
2	---	---	---
3	---	---	---
4	---	---	---
5	---	---	---
6	---	---	---
7	---	---	---
8	---	---	---

Date: 02/12/2014 | Drawn by: NJS | Check by: GEH
Project #: 042403 | Design by: GEH | Review by: MJN

STATE OF DELAWARE
DEPARTMENT OF NATURAL RESOURCES AND ENVIRONMENTAL CONTROL
DIVISION OF PARKS AND RECREATION & AUBURN VILLAGE LLC

NVF PROPERTIES
NVF YORKLYN SITE (DE-0071) YORKLYN, DELAWARE

EROSION AND SEDIMENT CONTROL PLAN

ENTRANCE SIGNING AND STRIPING PLAN

DRAWING NO.
C-130

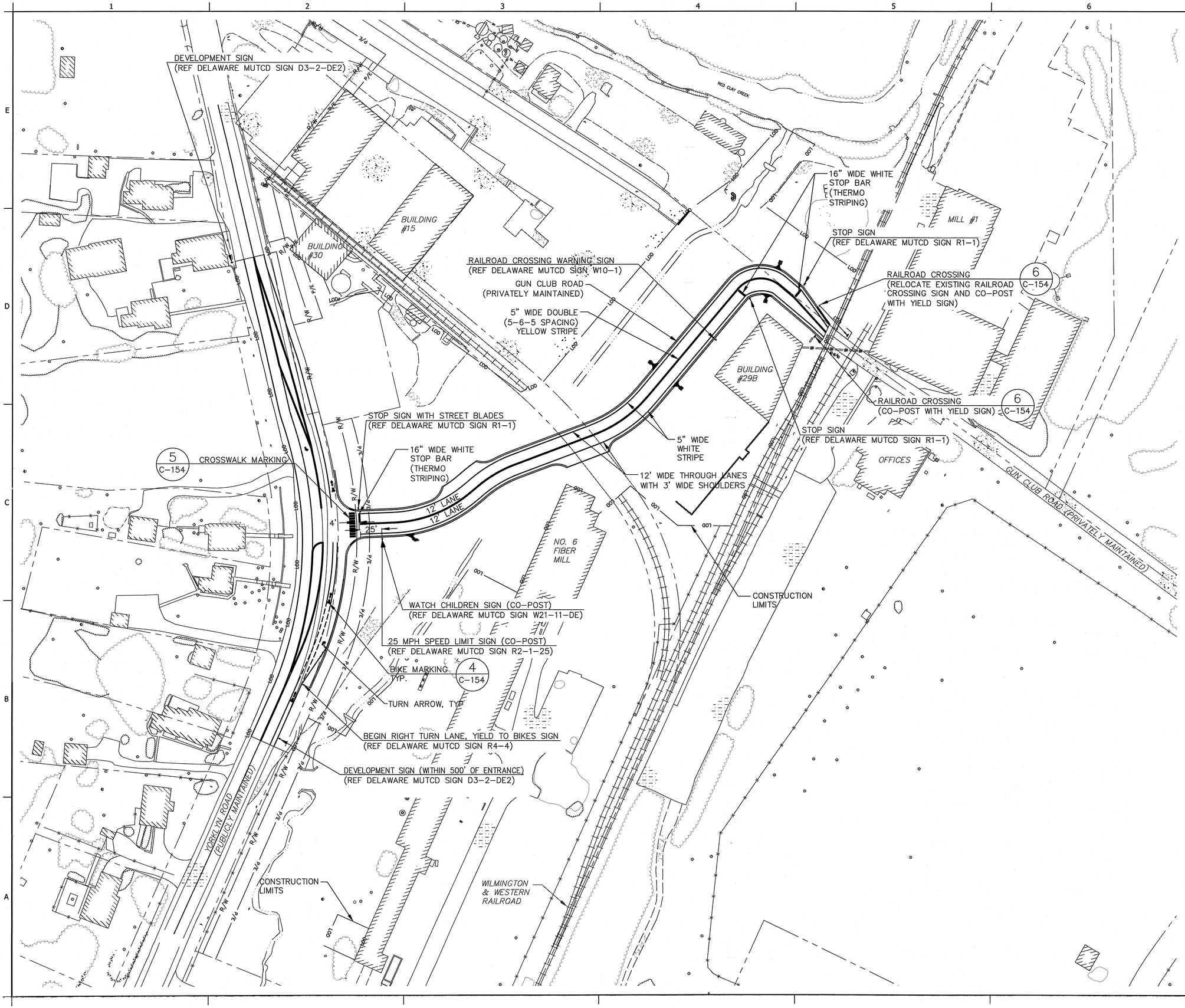

NOTES:

1. SEE SHEET C-100 FOR CIVIL LEGEND AND GENERAL NOTES.
2. SEE SHEET C-101 FOR PROJECT KEY PLAN.
3. SEE SHEET C-102 FOR EXISTING SITE SURVEY.
4. SEE SHEET C-103 FOR CONSTRUCTION LIMITS.
5. SEE SHEET C-104 FOR DEMOLITION PLAN.
6. SEE SHEETS C-110 AND C-111 FOR SITE LAYOUTS.
7. SEE SHEETS C-115 AND C-116 FOR UTILITY PLANS.
8. SEE SHEETS C-120 AND C-121 FOR GRADING PLANS.
9. SEE SHEET C-135 FOR PERMANENT EROSION AND SEDIMENT CONTROL PLAN.
10. SEE SHEET C-140 FOR GUN CLUB ROAD PROFILE AND CROSS SECTIONS.
11. SEE SHEET C-141 FOR DRAINAGE PROFILES.
12. SEE SHEET C-142 FOR ENTRANCE CROSS SECTIONS.
13. SEE SHEETS C-150 TO C-158 FOR CONSTRUCTION DETAILS.
14. REFERENCE DELAWARE MUTCD FIGURE 3B-11 (SHEET 4 OF 5) FOR RIGHT TURN LANE SIGNING AND STRIPING.
15. REFERENCE DELAWARE MUTCD FIGURE 9C-1F FOR BIKE LANE SIGNING AND STRIPING.
16. REFERENCE DELAWARE MUTCD FIGURE 8B-3 FOR RAILROAD CROSSING SIGNING AND STRIPING.
17. ALL PROPOSED SIGNS SHALL BE INSTALLED ON A BREAKAWAY SIGNPOST (SEE SHEET C-154, DETAIL 3).

BLACK & VEATCH
Federal Services Div.
200 BELLEVUE PARKWAY, SUITE 215
WILMINGTON, DELAWARE
PHONE: (302) 798-0200 FAX: (302) 798-0201
WEBSITE: WWW.BV.COM

Rev.	Description	Date	Apr.
8	---	---	---
7	---	---	---
6	---	---	---
5	---	---	---
4	---	---	---
3	---	---	---
2	---	---	---
1	Renewed E&S Permit	2/12/14	---

Date: 02/12/2014 | Drawn by: NJS | Check by: GEH
Project #: 042403 | Design by: GEH | Review by: MJN

STATE OF DELAWARE
DEPARTMENT OF NATURAL RESOURCES AND ENVIRONMENTAL CONTROL
DIVISION OF PARKS AND RECREATION & AUBURN VILLAGE LLC

NVF PROPERTIES
NVF YORKLYN SITE (DE-0071) YORKLYN, DELAWARE

EROSION AND SEDIMENT CONTROL PLAN

GUN CLUB ROAD
SIGNING AND STRIPING PLAN

DRAWING NO.
C-131

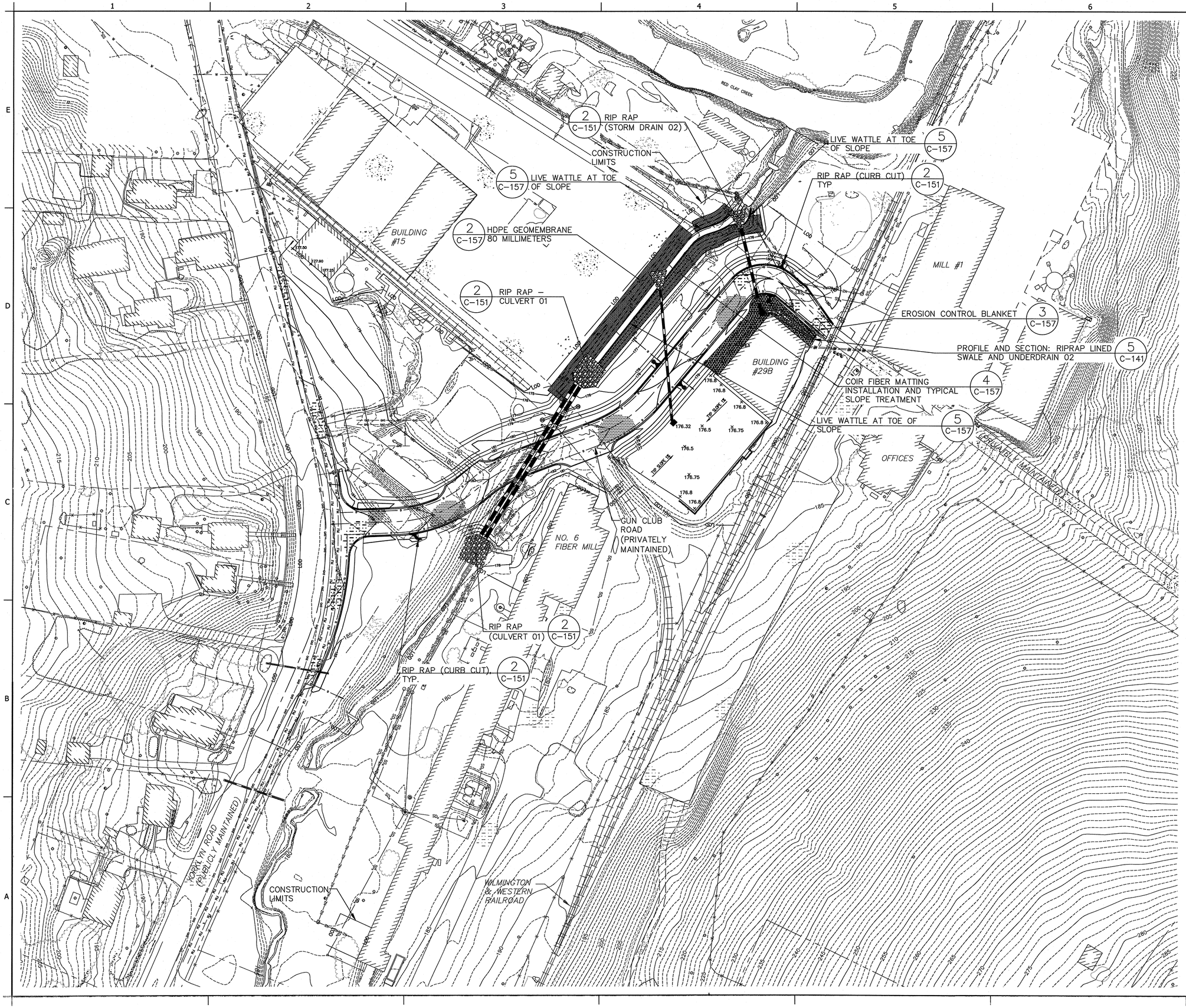

NOTES:

1. SEE SHEET C-100 FOR CIVIL LEGEND AND GENERAL NOTES.
2. SEE SHEET C-101 FOR PROJECT KEY PLAN.
3. SEE SHEET C-102 FOR EXISTING SITE SURVEY.
4. SEE SHEET C-103 FOR CONSTRUCTION LIMITS.
5. SEE SHEET C-104 FOR DEMOLITION PLAN.
6. SEE SHEETS C-110 AND C-111 FOR SITE LAYOUTS.
7. SEE SHEETS C-115 AND C-116 FOR UTILITY PLANS.
8. SEE SHEETS C-120 AND C-121 FOR GRADING PLANS.
9. SEE SHEETS C-130 AND C-131 FOR SIGNING AND STRIPING PLANS.
10. SEE SHEET C-140 FOR GUN CLUB ROAD PROFILE AND CROSS SECTIONS.
11. SEE SHEET C-141 FOR DRAINAGE PROFILES.
12. SEE SHEET C-142 FOR ENTRANCE CROSS SECTIONS.
13. SEE SHEETS C-150 TO C-158 FOR CONSTRUCTION DETAILS.
14. REFERENCE DNREC APPROVED EROSION AND SEDIMENT CONTROL PLANS FOR TEMPORARY EROSION AND SEDIMENT CONTROLS.

0' 50' 150'

SCALE: 1" – 50'

BLACK & VEATCH
Federal Services Div.
200 BELLEVUE PARKWAY, SUITE 215
WILMINGTON, DELAWARE
PHONE: (302) 798-0200 FAX: (302) 798-0201
WEBSITE: WWW.BV.COM

Rev.	Description	Date	Apr.
1	Reviewed SSS Permit	2/12/14	—
2	—	—	—
3	—	—	—
4	—	—	—
5	—	—	—
6	—	—	—
7	—	—	—
8	—	—	—

Date: 02/12/2014	Drawn by: KJS	Check by: GEH	
Project #: 042403	Design by: GEH	Review by: MJN	

STATE OF DELAWARE
DEPARTMENT OF NATURAL RESOURCES AND ENVIRONMENTAL CONTROL
DIVISION OF PARKS AND RECREATION & AUBURN VILLAGE LLC

NVF PROPERTIES
NVF YORKLYN SITE (DE-0071) YORKLYN, DELAWARE

EROSION AND SEDIMENT CONTROL PLAN

PERMANENT EROSION AND SEDIMENT CONTROL PLAN

DRAWING NO.
C-135

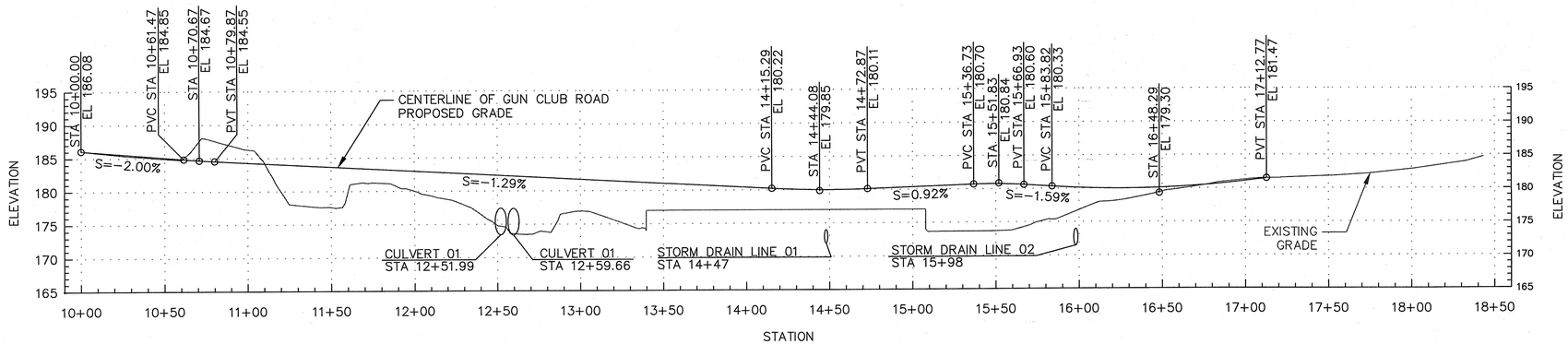

GUN CLUB ROAD

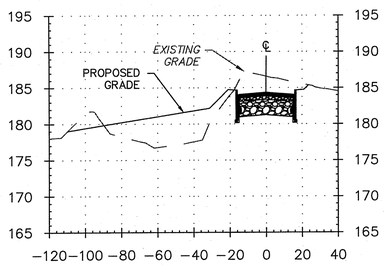

11+00

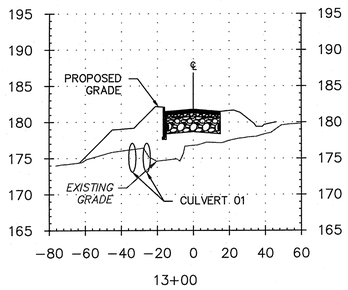

13+00

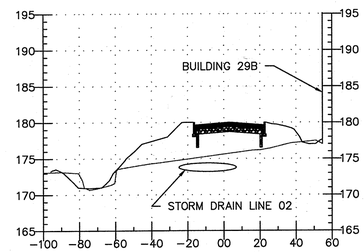

16+00

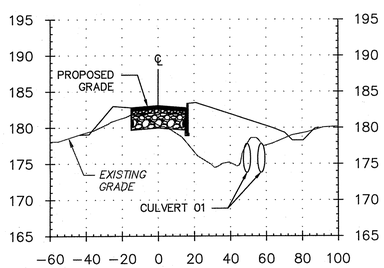

12+00

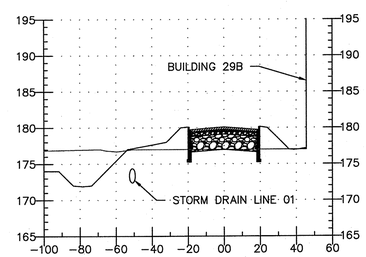

15+00

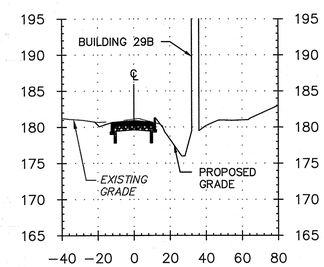

17+00

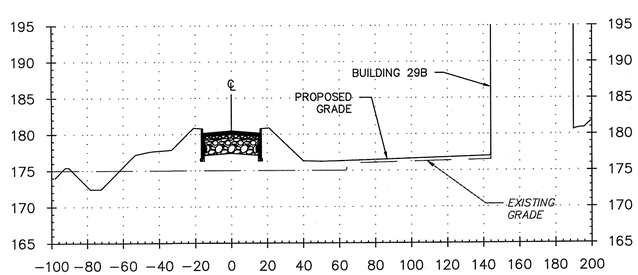

14+00

NOTES:

1. SEE SHEET C-100 FOR CIVIL LEGEND AND GENERAL NOTES.
2. SEE SHEET C-101 FOR PROJECT KEY PLAN.
3. SEE SHEET C-102 FOR EXISTING SITE SURVEY.
4. SEE SHEET C-103 FOR CONSTRUCTION LIMITS.
5. SEE SHEET C-104 FOR DEMOLITION PLAN.
6. SEE SHEETS C-110 AND C-111 FOR SITE LAYOUTS.
7. SEE SHEETS C-115 AND C-116 FOR UTILITY PLANS.
8. SEE SHEETS C-120 AND C-121 FOR GRADING PLANS.
9. SEE SHEETS C-130 AND C-131 FOR SIGNING AND STRIPING PLANS.
10. SEE SHEET C-135 FOR PERMANENT EROSION AND SEDIMENT CONTROL PLAN.
11. SEE SHEET C-141 FOR DRAINAGE PROFILES.
12. SEE SHEET C-142 FOR ENTRANCE CROSS SECTIONS.
13. SEE SHEETS C-150 TO C-158 FOR CONSTRUCTION DETAILS.

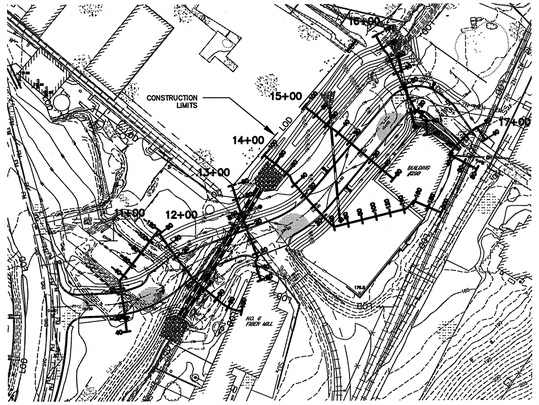

SCALE: 1" – 100'

NOTE: ALL CROSS SECTIONS ARE CUT FROM WEST TO EAST IN THE INCREASING STATION DIRECTION.

PROFILE AND CROSS SECTIONS

VERTICAL SCALE

0' 10' 30'

SCALE: 1" – 10'

HORIZONTAL SCALE

0' 40' 120'

SCALE: 1" – 40'

BLACK & VEATCH
Federal Services Div.
200 BELLEVUE PARKWAY, SUITE 215
WILMINGTON, DELAWARE
PHONE: (302) 798-0200 FAX: (302) 798-0201
WEBSITE: WWW.BV.COM

Rev.	Description	Date
8	---	---
7	---	---
6	---	---
5	---	---
4	---	---
3	---	---
2	---	---
1	Removed E&S Permit	2/12/14

Date: 02/12/2014 | Drawn by: NAS | Check by: GEH
Project #: 042403 | Design by: GEH | Review by: MWK

STATE OF DELAWARE
DEPARTMENT OF NATURAL RESOURCES AND ENVIRONMENTAL CONTROL
DIVISION OF PARKS AND RECREATION & AUBURN VILLAGE LLC

NVF PROPERTIES
NVF YORKLYN SITE (DE-0071) YORKLYN, DELAWARE

EROSION AND SEDIMENT CONTROL PLAN

GUN CLUB ROAD
PROFILE AND
CROSS SECTIONS

DRAWING NO.
C-140

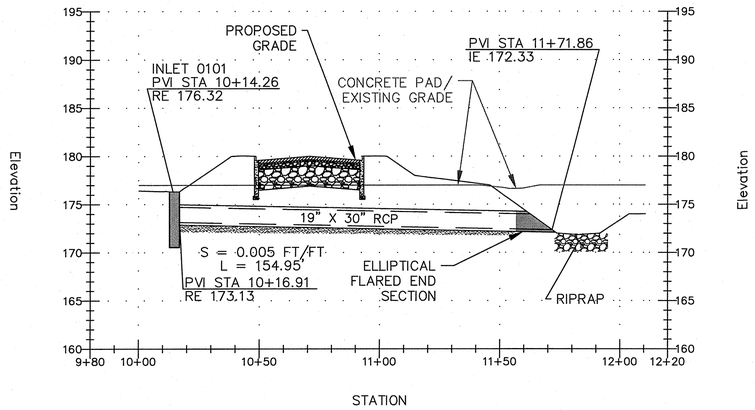

1 / C-141 PROFILE: STORM DRAIN LINE 01

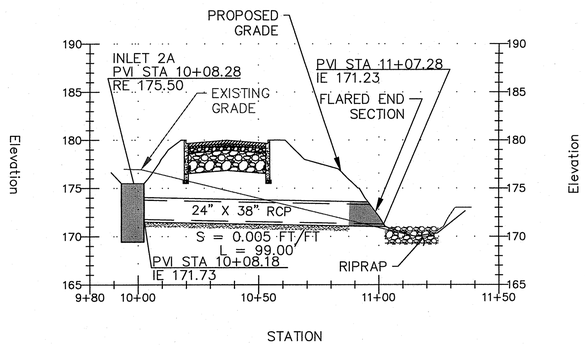

2 / C-141 PROFILE: STORM DRAIN LINE 02

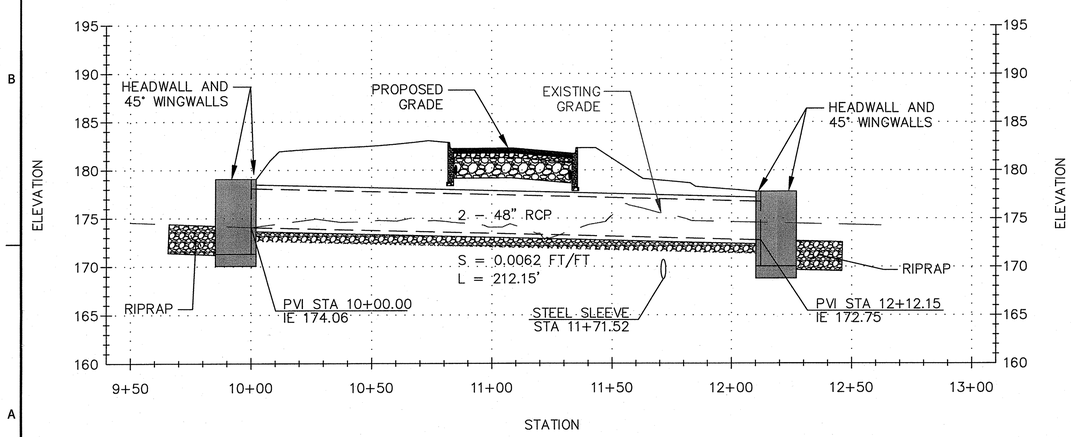

3 / C-141 PROFILE: CULVERT 01

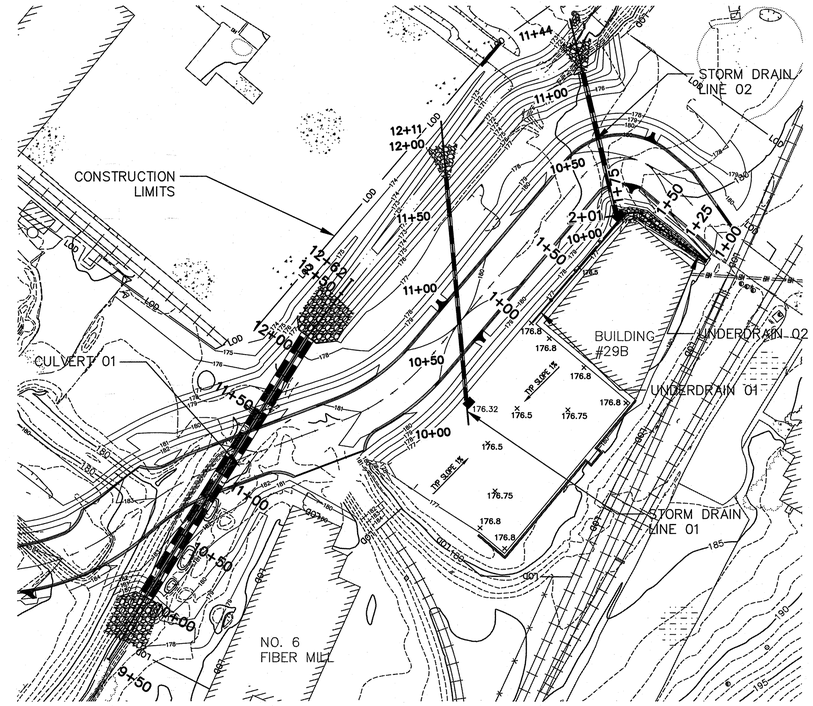

PLAN VIEW
SCALE: 1" – 50'

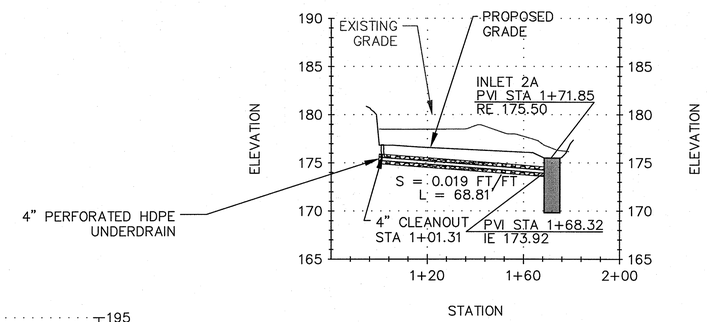

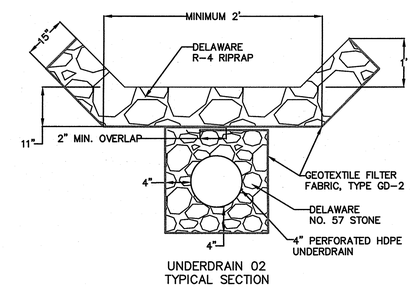

UNDERDRAIN 02 TYPICAL SECTION

5 / C-141 PROFILE AND SECTION: RIPRAP LINED SWALE AND UNDERDRAIN 02

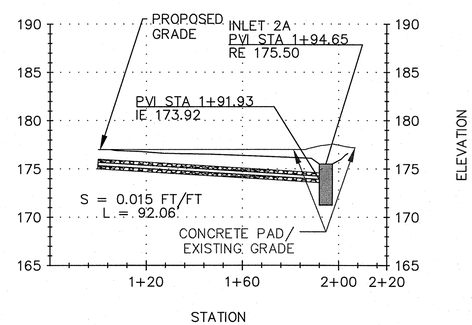

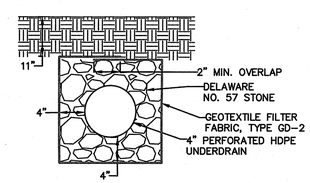

UNDERDRAIN 01 TYPICAL SECTION

4 / C-141 PROFILE AND SECTION: SWALE AND UNDERDRAIN 01

NOTES:

1. SEE SHEET C-100 FOR CIVIL LEGEND AND GENERAL NOTES.
2. SEE SHEET C-101 FOR PROJECT KEY PLAN.
3. SEE SHEET C-102 FOR EXISTING SITE SURVEY.
4. SEE SHEET C-103 FOR CONSTRUCTION LIMITS.
5. SEE SHEET C-104 FOR DEMOLITION PLAN.
6. SEE SHEETS C-110 AND C-111 FOR SITE LAYOUTS.
7. SEE SHEETS C-115 AND C-116 FOR UTILITY PLANS.
8. SEE SHEETS C-120 AND C-121 FOR GRADING PLANS.
9. SEE SHEETS C-130 AND C-131 FOR SIGNING AND STRIPING PLANS.
10. SEE SHEET C-135 FOR PERMANENT EROSION AND SEDIMENT CONTROL PLAN.
11. SEE SHEET C-140 FOR GUN CLUB ROAD PROFILE AND CROSS SECTIONS.
12. SEE SHEET C-142 FOR ENTRANCE CROSS SECTIONS.
13. SEE SHEETS C-150 TO C-158 FOR CONSTRUCTION DETAILS.

PROFILES

HORIZONTAL SCALE
0' 30' 90'
SCALE: 1" – 30'

VERTICAL SCALE
0' 7.5' 22.5'
SCALE: 1" – 7.5'

BLACK & VEATCH
Federal Services Div.
200 BELLEVUE PARKWAY, SUITE 215
WILMINGTON, DELAWARE
PHONE: (302) 798-0000 FAX: (302) 798-0201
WEBSITE: WWW.BV.COM

Rev.	Description	Date	Apr.
1	Renewed E&S Permit	2/12/14	---
2	---	---	---
3	---	---	---
4	---	---	---
5	---	---	---
6	---	---	---
7	---	---	---
8	---	---	---

Date: 02/12/2014	Drawn by: NDS	Check by: GEH	
Project #: 042403	Design by: GEH	Review by: HJN	

STATE OF DELAWARE
DEPARTMENT OF NATURAL RESOURCES AND ENVIRONMENTAL CONTROL
DIVISION OF PARKS AND RECREATION & AUBURN VILLAGE LLC
NVF PROPERTIES
NVF YORKLYN SITE (DE-0071) YORKLYN, DELAWARE

EROSION AND SEDIMENT CONTROL PLAN

DRAINAGE PROFILES

DRAWING NO.
C-141

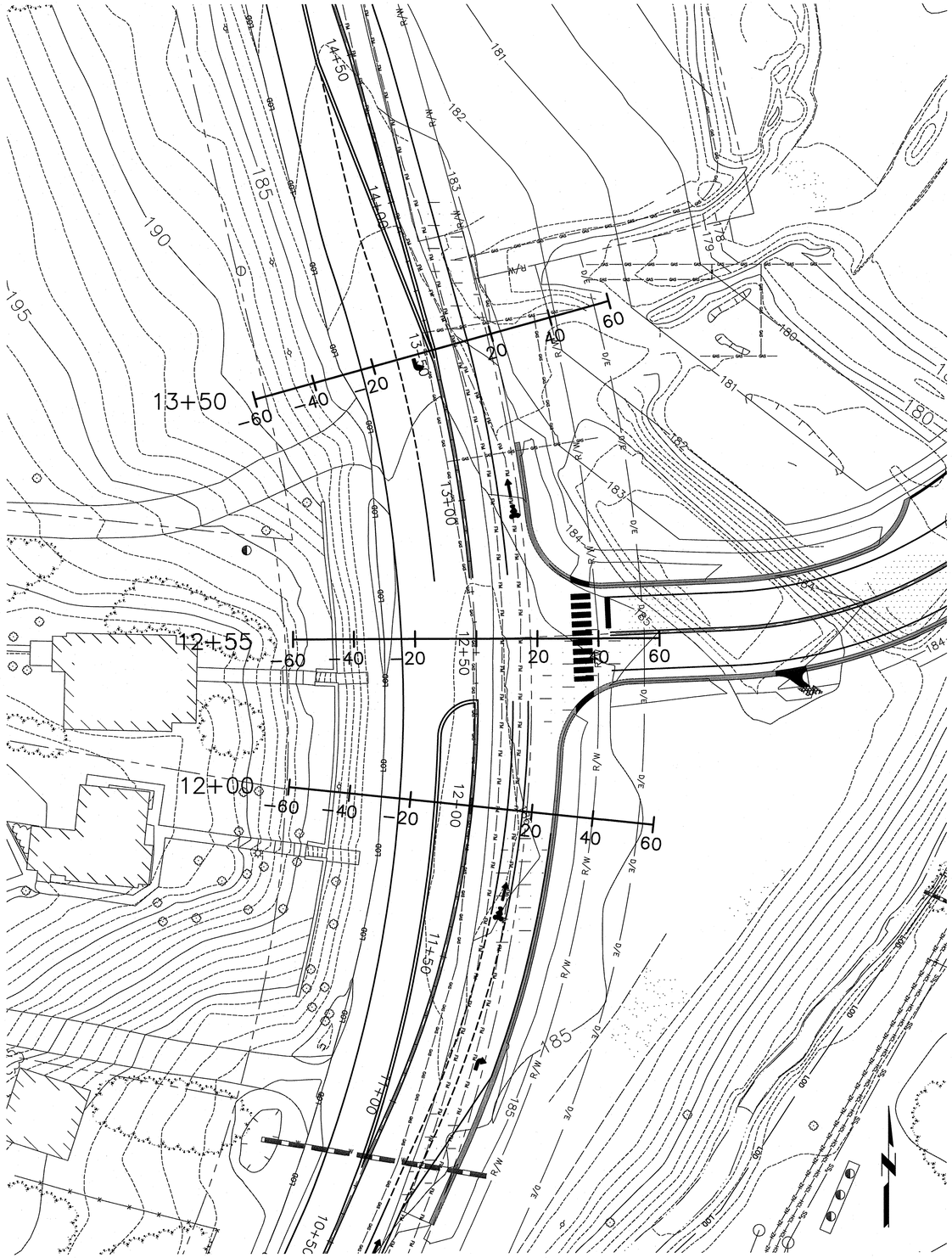

SCALE: 1" – 20'

NOTE: ALL CROSS SECTIONS ARE CUT FROM WEST TO EAST.

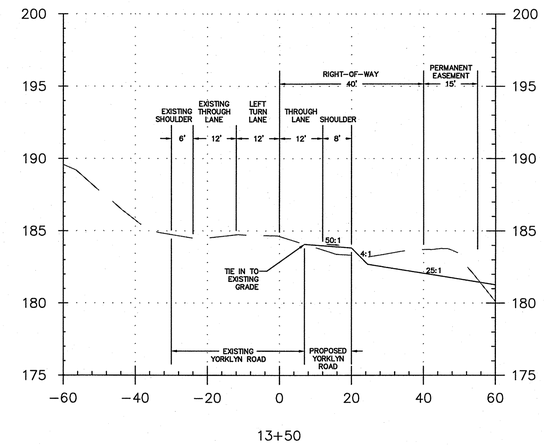

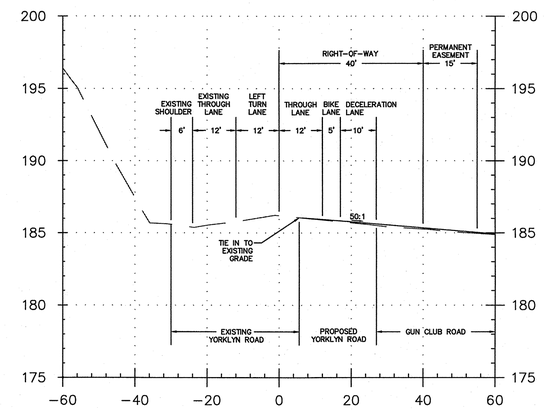

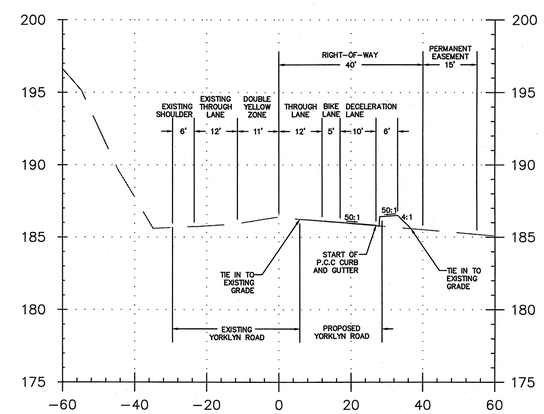

NOTES:

1. SEE SHEET C-100 FOR CIVIL LEGEND AND GENERAL NOTES.
2. SEE SHEET C-101 FOR PROJECT KEY PLAN.
3. SEE SHEET C-102 FOR EXISTING SITE SURVEY.
4. SEE SHEET C-103 FOR CONSTRUCTION LIMITS.
5. SEE SHEET C-104 FOR DEMOLITION PLAN.
6. SEE SHEETS C-110 AND C-111 FOR SITE LAYOUTS.
7. SEE SHEETS C-115 AND C-116 FOR UTILITY PLANS.
8. SEE SHEETS C-120 AND C-121 FOR GRADING PLANS.
9. SEE SHEETS C-130 AND C-131 FOR SIGNING AND STRIPING PLANS.
10. SEE SHEET C-135 FOR PERMANENT EROSION AND SEDIMENT CONTROL PLAN.
11. SEE SHEET C-141 FOR DRAINAGE PROFILES.
12. SEE SHEETS C-150 TO C-158 FOR CONSTRUCTION DETAILS.

CROSS SECTIONS

VERTICAL SCALE

0' 5' 15'

SCALE: 1" – 5'

HORIZONTAL SCALE

0' 20' 60'

SCALE: 1" – 20'

BLACK & VEATCH
Federal Services Div.
200 BELLEVUE PARKWAY, SUITE 215
WILMINGTON, DELAWARE
PHONE: (302) 798-6000 FAX: (302) 798-0201
WEBSITE: WWW.BV.COM

Rev.	Description	Date	Apr.
8	---	---	---
7	---	---	---
6	---	---	---
5	---	---	---
4	---	---	---
3	---	---	---
2	---	---	---
1	Renewed E&S Permit	2/12/14	---

Date:	Drawn by:	Check by:
07/22/2014	MSS	GEH
Project #:	Design by:	Review by:
042403	GEH	KMH

STATE OF DELAWARE
DEPARTMENT OF NATURAL RESOURCES AND ENVIRONMENTAL CONTROL
DIVISION OF PARKS AND RECREATION & AUBURN VILLAGE LLC

NVF PROPERTIES
NVF YORKLYN SITE (DE-0071) YORKLYN, DELAWARE

EROSION AND SEDIMENT CONTROL PLAN

ENTRANCE
CROSS SECTIONS

DRAWING NO.
C-142

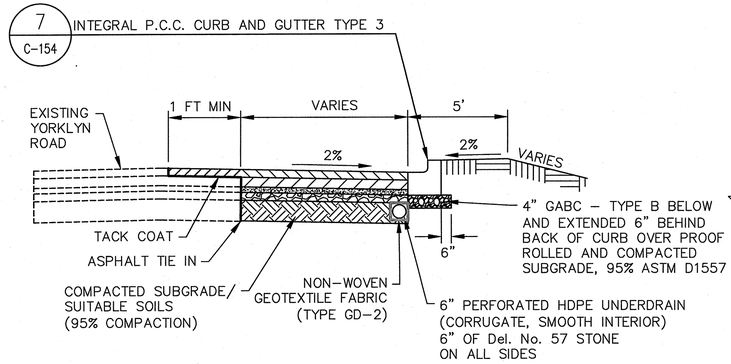

1 C-150 YORKLYN ROAD TYPICAL SECTION WITH CURB
NTS

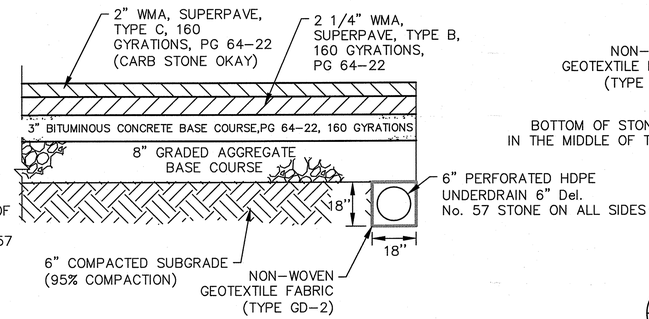

REQUIRED STRUCTURAL NUMBER – 4.05

4 C-150 YORKLYN ROAD STANDARD ASPHALT SECTION
NTS

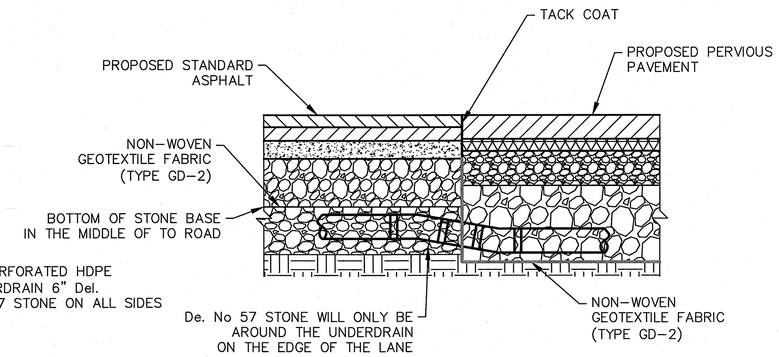

7 C-150 ASPHALT TIE-IN SECTION – PROPOSED YORKLYN ROAD TO PROPOSED GUN CLUB ROAD
NTS

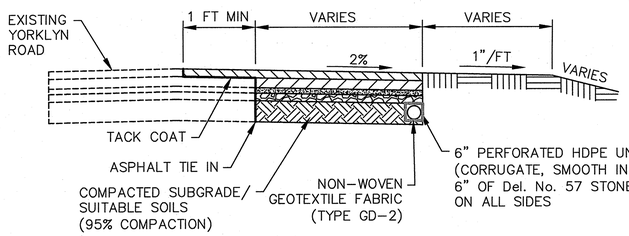

2 C-150 YORKLYN ROAD TYPICAL SECTION WITHOUT CURB
NTS

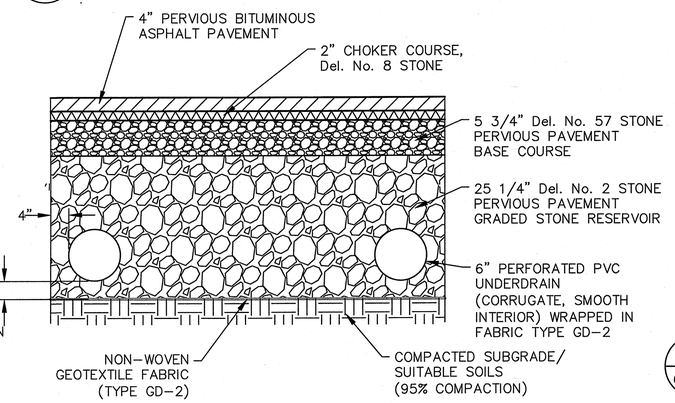

5 C-150 GUN CLUB ROAD PERVIOUS PAVEMENT SECTION
NTS

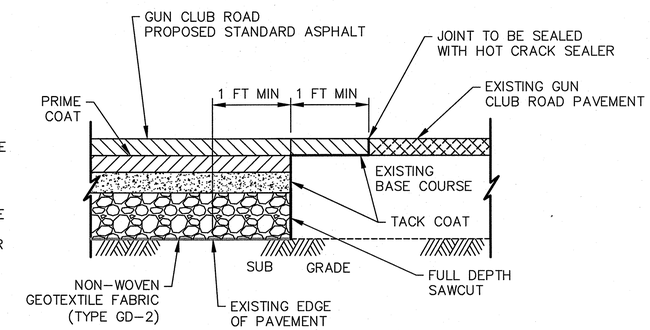

8 C-150 ASPHALT TIE-IN SECTION – PROPOSED GUN CLUB ROAD TO EXISTING GUN CLUB ROAD
NTS

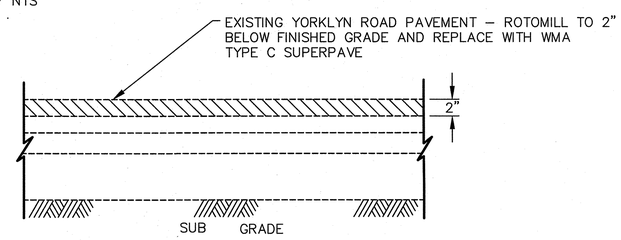

9 C-150 EXISTING ASPHALT 2" MILL AND OVERLAY
NTS

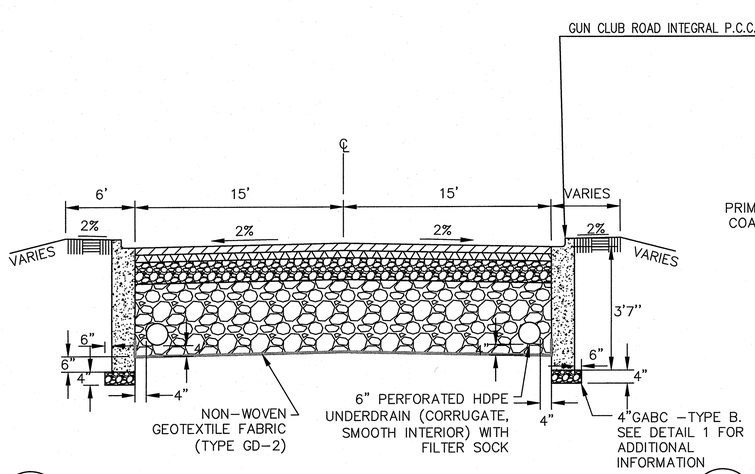

3 C-150 GUN CLUB ROAD TYPICAL SECTION
NTS

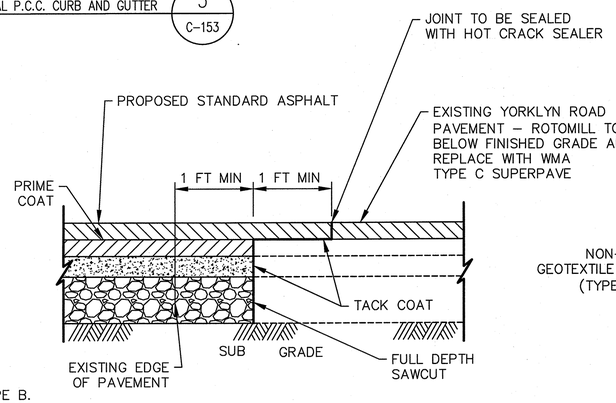

6 C-150 ASPHALT TIE-IN SECTION – EXISTING YORKLYN ROAD TO PROPOSED YORKLYN ROAD
NTS

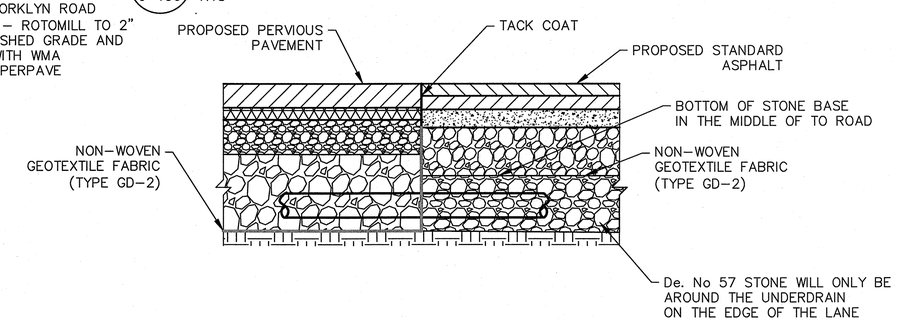

10 C-150 ASPHALT TIE-IN SECTION – GUN CLUB ROAD PERVIOUS PAVEMENT TO STANDARD ASPHALT PAVEMENT
NTS

BLACK & VEATCH
Federal Services Div.
201 DELAWARE AVENUE, SUITE 215
WILMINGTON, DELAWARE
PHONE: (302) 798-0200 FAX: (302) 798-0201
WEBSITE: WWW.BV.COM

Rev.	Description	Date	Apr.
8	---	---	---
7	---	---	---
6	---	---	---
5	---	---	---
4	---	---	---
3	---	---	---
2	---	---	---
1	Removed E&S Permit	2/13/14	---

Date: 02/12/2014 | Drawn by: NJS | Check by: GEH
Project #: 042403 | Design by: GEH | Review by: MJN

STATE OF DELAWARE
DEPARTMENT OF NATURAL RESOURCES AND ENVIRONMENTAL CONTROL
DIVISION OF PARKS AND RECREATION & AUBURN VILLAGE LLC

NVF PROPERTIES
NVF YORKLYN SITE (DE-0071) YORKLYN, DELAWARE

EROSION AND SEDIMENT CONTROL PLAN

CONSTRUCTION DETAILS
SHEET 1

DRAWING NO.
C-150

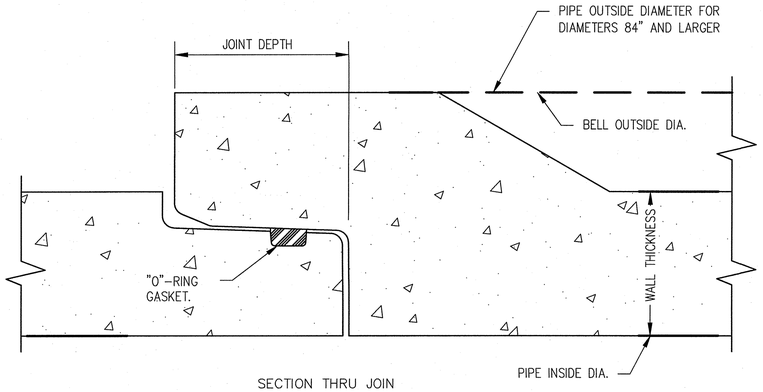

SECTION THRU JOIN

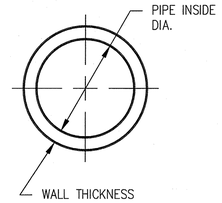

SECTION THRU BARREL

Table of Dimensions and Weights

PIPE INSIDE DIAMETER (INCHES)	WALL THICKNESS (INCHES)	JOINT DEPTH (INCHES)	BELL OUTSIDE DIAMETER (INCHES)	LENGTH (FEET)	WEIGHT (LBS./FT.)
48	5	5 1/2	64	8, 12	920

1 / C-151 REINFORCED CONCRETE PIPE WITH "O"-RING JOINT

RINKER PIPE OR APPROVED EQUIVALENT
N.T.S.

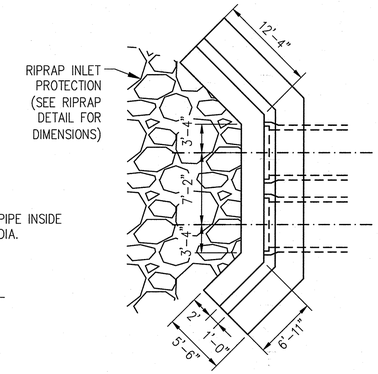

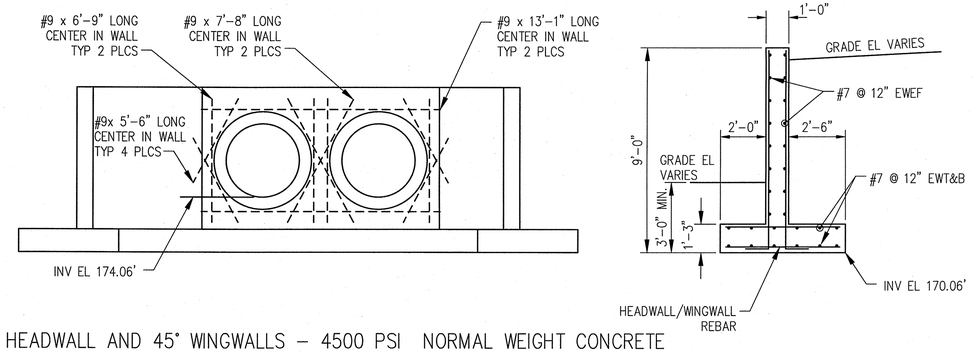

3 / C-151 CULVERT 01 ENTRANCE HEADWALL AND 45° WINGWALLS – 4500 PSI NORMAL WEIGHT CONCRETE

N.T.S.

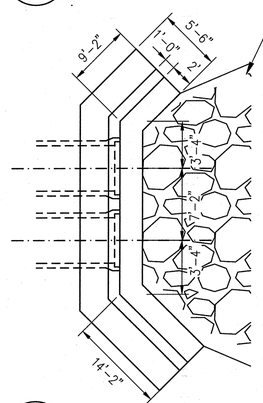

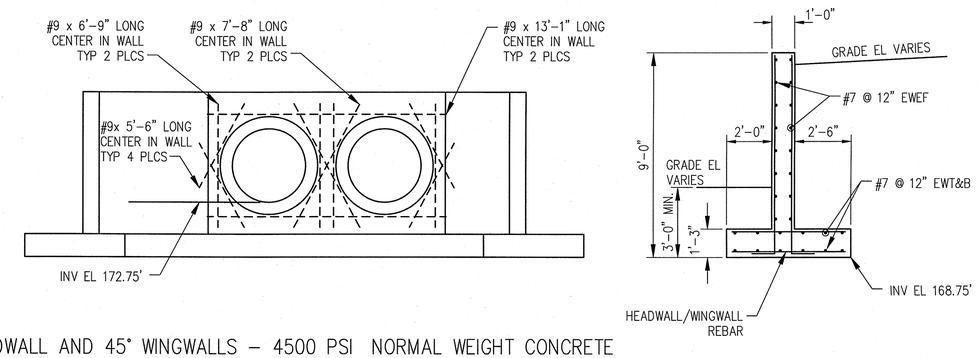

4 / C-151 CULVERT 01 EXIT HEADWALL AND 45° WINGWALLS – 4500 PSI NORMAL WEIGHT CONCRETE

N.T.S.

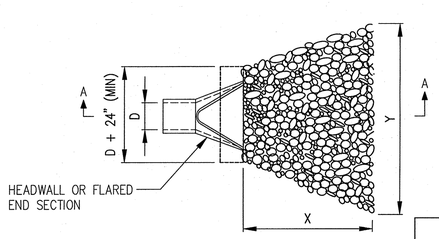

PLAN VIEW

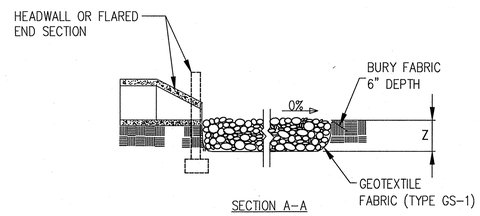

SECTION A-A

Pipe	Pipe Diameter (inches)	NSA* Number	D50** (inches)	Dmin (inches)	Dmax (inches)	X (ft)	Y (ft)	Z (inches)
Storm Drain Line 01	19 X 30	R-5	9	5	18	22	22	22
Storm Drain Line 02	24 X 38	R-5	9	5	18	22	22	22
Culvert 01	2-48	R-6	12	7	24	34	32	36
Curb Cut	–	R-4	6	3	12	4	4	18
Underdrain Outlet	6	R-4	6	3	12	4	2	18

NOTES

1. RIPRAP TO BE PLACED PRIOR TO PLACING PIPE.
2. PLACE DELAWARE #3 STONE UNDER PIPE.
3. TOP OF RIPRAP SHALL NOT BE HIGHER THAN PIPE INVERT.

* National Stone Association
** 50% of pieces, by weight, should be larger than this size.
Dimensions may vary depending upon equipment availability.

2 / C-151 RIPRAP

N.T.S.

BLACK & VEATCH
Federal Services Div.
200 BELLEVUE PARKWAY, SUITE 216
WILMINGTON, DELAWARE
PHONE: (302) 798-0200 FAX: (302) 798-0201
WEBSITE: WWW.BV.COM

Rev.	Description	Date	Apr.
1	Renewed E&S Permit	2/12/14	---
2	---	---	---
3	---	---	---
4	---	---	---
5	---	---	---
6	---	---	---
7	---	---	---
8	---	---	---

Date: 02/12/2014 Drawn by: NJS Check by: GEH
Project #: 042403 Design by: GEH Review by: MJN

STATE OF DELAWARE
DEPARTMENT OF NATURAL RESOURCES AND ENVIRONMENTAL CONTROL
DIVISION OF PARKS AND RECREATION & AUBURN VILLAGE LLC

NVF PROPERTIES
NVF YORKLYN SITE (DE-0071) YORKLYN, DELAWARE

EROSION AND SEDIMENT CONTROL PLAN

CONSTRUCTION DETAILS
SHEET 2

DRAWING NO.
C-151

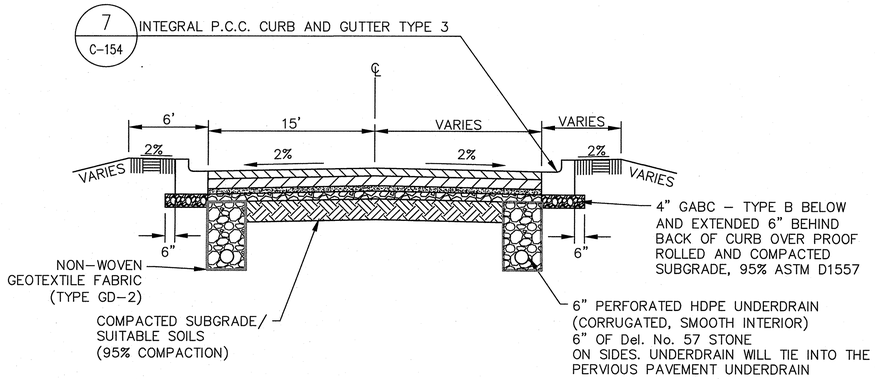

1 / C-152 GUN CLUB ROAD TYPICAL STANDARD ASPHALT SECTION

NTS

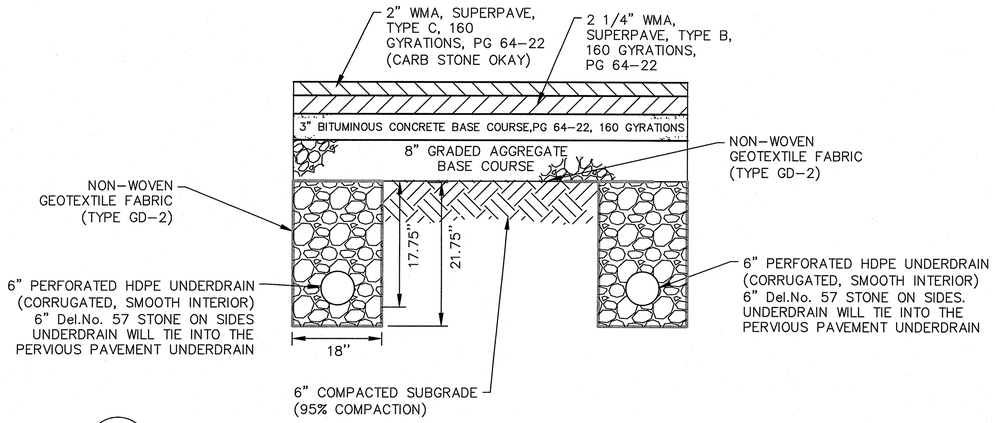

2 / C-152 GUN CLUB ROAD STANDARD ASPHALT SECTION

NTS

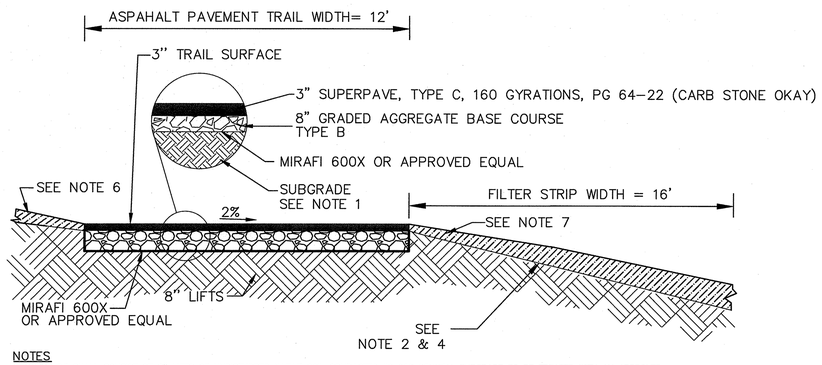

NOTES:

1. SUBGRADE SHALL CONSIST OF 8" LIFTS OF UNDISTURBED NATIVE SOIL COMPACTED TO 95% DENSITY. SUBGRADE TO BE TREATED WITH AN APPROVED HERBICIDE PRIOR TO INSTALLATION OF GEOTEXTILE FABRIC AND GABC.
2. MAXIMUM TRAIL SHOULDER SIDE SLOPE IS 4:1. GRADE WITH COMPACTED TOPSOIL BACKFILL AS REQUIRED. BOTTOM OF SIDESLOPE SHALL BE GRADED TO PREVENT ACCUMULATION OF RUN-OFF.
3. MAXIMUM TRAIL SLOPE IS 20:1 IN DIRECTION OF TRAVEL. MAX CROSS SLOPE IS 50:1.
4. FIRST 16' GRASS STRIP DOWNHILL FROM SIDEWALK WILL BE A FILTER STRIP.
5. A MINIMUM OF 6" OF TOP SOIL SHALL BE USED ON ALL FILTER STRIPS WHERE NECESSARY.
6. SOIL THAT IS EXCAVATED TO INSTALL THE 8" DEPTH BASE COURSE SHALL BE SPREAD ON THE UPHILL SIDE OF THE 2" DEPTH PAVED PATHWAY. SOIL SHALL BE SPREAD UPHILL TO MAINTAIN A MINIMUM 2% SLOPE (MAX 4:1). SEED PER DNREC STANDARD AND SPECIFICATIONS.
7. SOIL THAT IS SPREAD DOWNHILL SHALL NOT PROMOTE PONDING ON THE PAVED PATHWAY. SEED PER DNREC STANDARDS AND SPECIFICATIONS.

3 / C-152 UNIT PRICE COST: PAVED TRAIL SECTION

NTS

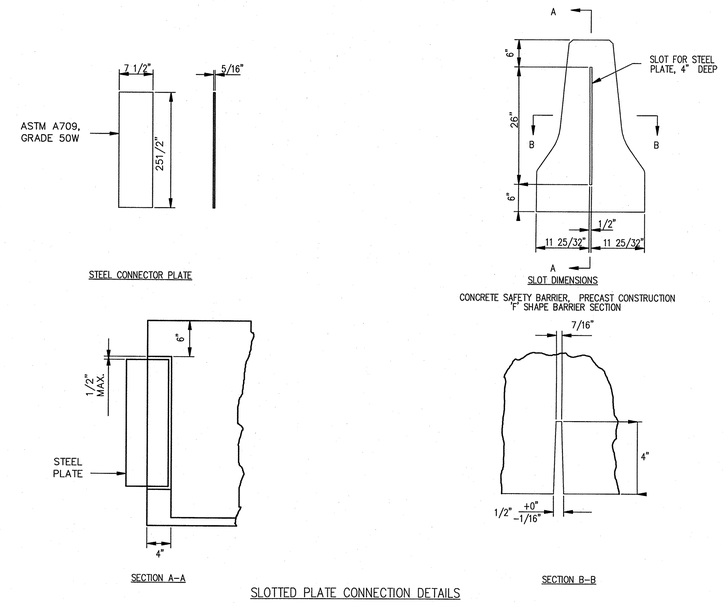

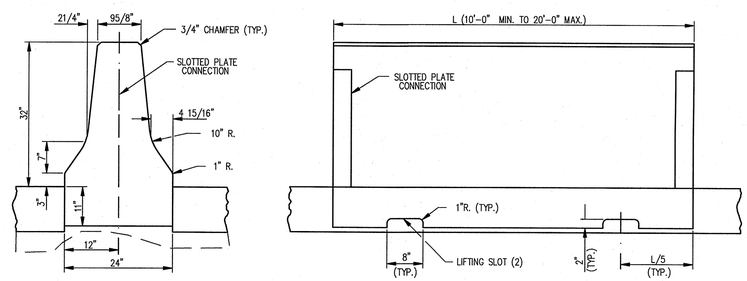

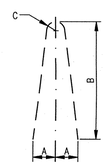

BAR OFFSETS		
NOMINAL LENGTH OF BARRIER UNIT	"X"	NO. REQ'D FOR EACH BARRIER UNIT
20'	6' – 11"	2
18'	6' – 5"	2
16'	5' – 11"	2
14'	7' – 0"	1
12'	6' – 0"	1
10'	5' – 0"	1

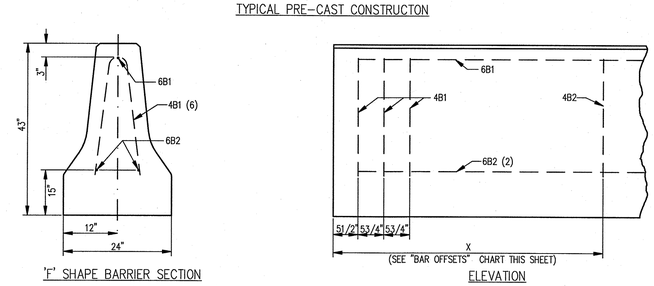

BAR LIST							
MARK	SIZE	NUMBER IN EACH SECTION	LENGTH	TYPE	A	B	C
4B1	4 (13)	6	4'-7"	1	5"	26"	2"
4B2	4 (13)	**	4'-7"	1	5"	26"	2"
6B1	6 (19)	1	*	STR.			
6B2	6 (19)	2	*	STR.			

* THE LENGTH OF BARS 6B1 AND 6B2 SHALL BE 11" SHORTER IN LENGTH THAN THE NOMINAL SIZE OF THE BARRIER IN WHICH IT IS USED.

** SEE "BAR OFFSETS" CHART ON THIS SHEET FOR MORE INFORMATION.

NOTES: 1). CONCRETE CLEAR COVER FOR REINFORCING BARS SHALL BE 11/2" (40) MIN..

4 / C-152 PRECAST CONCRETE BARRIER – TYPE F (20 FT)

DELAWARE CONSTRUCTION DETAILS SHEET B-14 (2009)
NTS

BLACK & VEATCH
Federal Services Div.
200 BELLEVUE PARKWAY, SUITE 215
WILMINGTON, DELAWARE
PHONE: (302) 798-0200 FAX: (302) 798-0201
WEBSITE: WWW.BV.COM

Date: 02/12/2014	Drawn by: NJS	Check by: GEH	8	--	--	--	--	--	--
Project #: 042403	Design by: GEH	Review by: MDN	7	--	--	--	--	--	--
			6	--	--	--	--	--	--
			5	--	--	--	--	--	--
			4	--	--	--	--	--	--
			3	--	--	--	--	--	--
			2	--	--	--	--	--	--
			1	Renewed E&S Permit	--	--	--	2/12/14	Apr.
			Rev.	Description				Date	

STATE OF DELAWARE
DEPARTMENT OF NATURAL RESOURCES AND ENVIRONMENTAL CONTROL
DIVISION OF PARKS AND RECREATION & AUBURN VILLAGE LLC
NVF PROPERTIES
NVF YORKLYN SITE (DE-0071) YORKLYN, DELAWARE

EROSION AND SEDIMENT CONTROL PLAN

CONSTRUCTION DETAILS
SHEET 3

DRAWING NO.
C-152

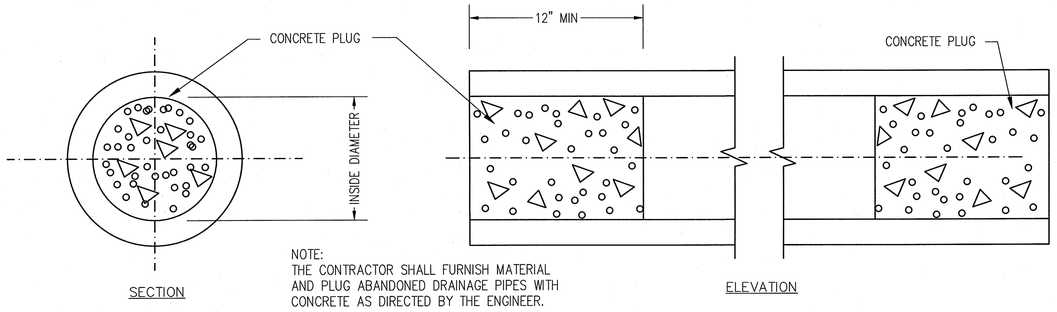

NOTE:
THE CONTRACTOR SHALL FURNISH MATERIAL AND PLUG ABANDONED DRAINAGE PIPES WITH CONCRETE AS DIRECTED BY THE ENGINEER.

1 / C-153 PIPE PLUGGING

DELAWARE CONSTRUCTION DETAILS SHEET D-10 (2011)
N.T.S.

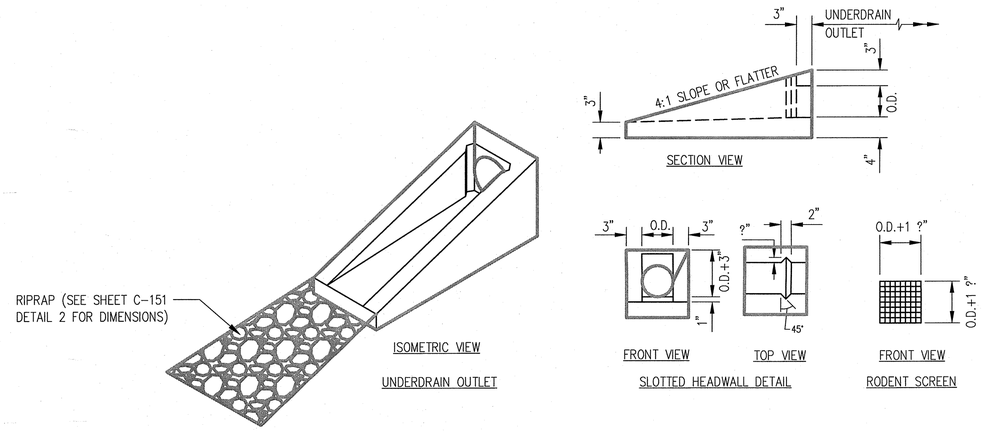

NOTES:

1). OUTLET PIPE SHALL ALSO BE NON-PERFORATED AND HAVE A SMOOTH INTERIOR.
2). RODENT SCREEN SHALL SNUGLY FIT THE PROVIDED SLOT WITH THE SCREEN LIP FITTING TIGHT TO THE BOTTOM FLOW LINE.
3). A 4' FLEXIBLE DELINEATOR SHALL BE FURNISHED AND INSTALLED AT THE DIRECTION OF THE ENGINEER TO MARK THE LOCATION OF THE CONCRETE HEADWALL.
4). FOR SIZE AND DIMENSIONS OF RIPRAP REFER TO SHEET C-151, DETAIL 2

3 / C-153 PERFORATED UNDERDRAIN OUTLET

DELDOT CONSTRUCTION DETAILS SHEET D-9 (2008)
N.T.S.

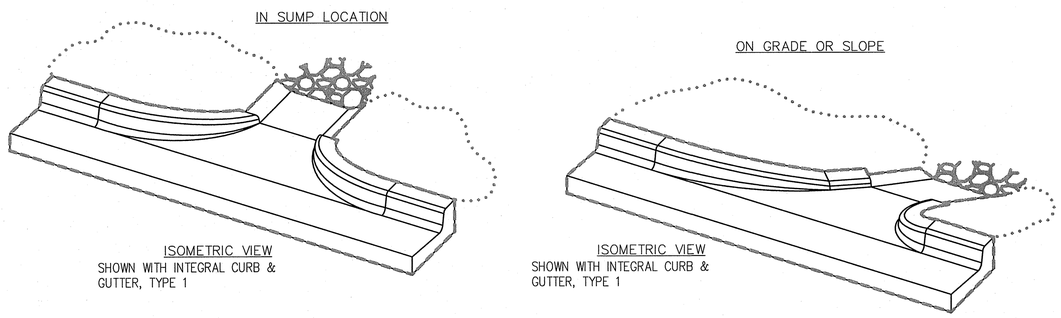

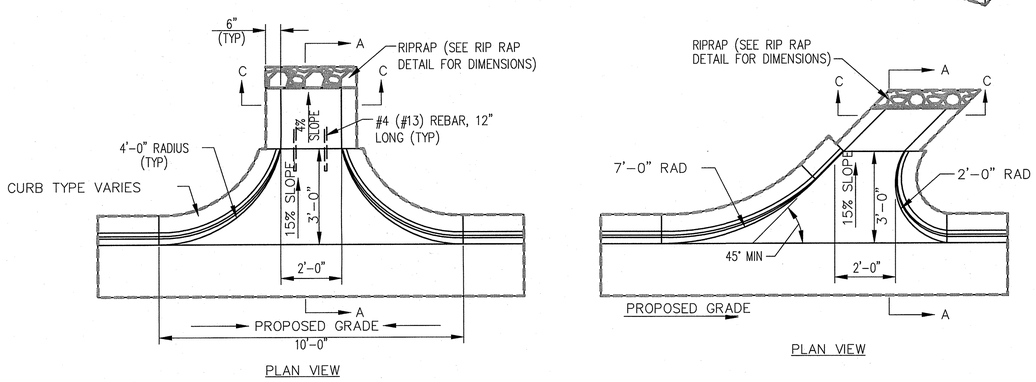

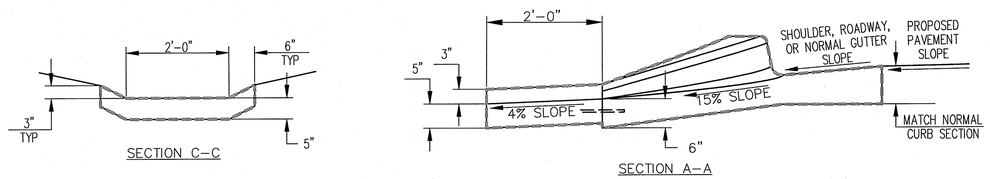

2 / C-153 CURB OPENING

DELDOT CONSTRUCTION DETAILS SHEET C-4 (2010)
NTS

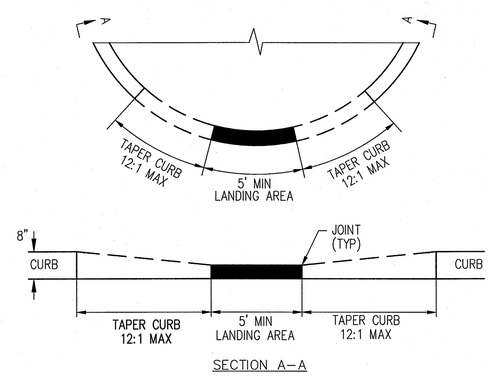

4 / C-153 CURB ENTRANCE – P.C.C. CURB AND GUTTER TYPE 3-8 TRANSITION TO FLUSH

NTS

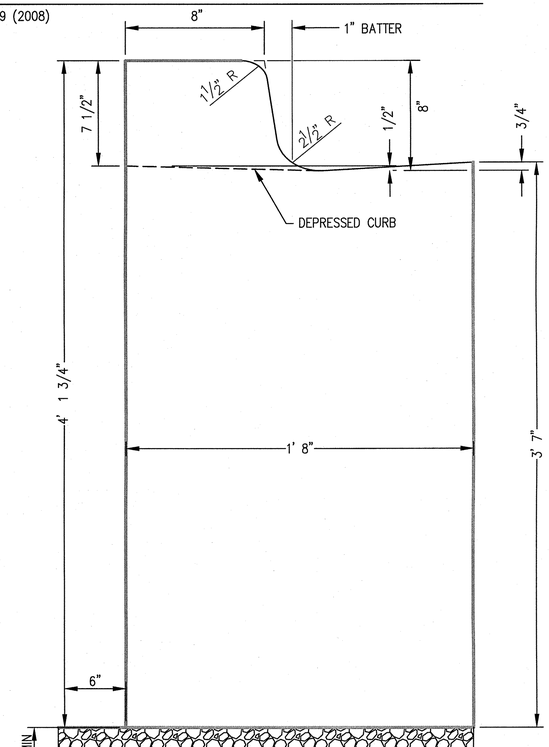

NOTES:

1) EXPANSION JOINTS SHALL BE PLACED EVERY 40 FT THROUGHOUT ENTIRE LENGTH OF CURB
2) LONGITUDINAL JOINTS SHALL BE CONSTRUCTED IN 10 FT SECTIONS

5 / C-153 GUN CLUB ROAD INTEGRAL P.C.C. CURB AND GUTTER

NTS

BLACK & VEATCH
Federal Services Div.
200 BELLEVUE PARKWAY, SUITE 215
WILMINGTON, DELAWARE
PHONE: (302) 798-0200 FAX: (302) 798-0201
WEBSITE: WWW.BV.COM

Rev.	Description	Date	Apr.
8	---	---	---
7	---	---	---
6	---	---	---
5	---	---	---
4	---	---	---
3	---	---	---
2	---	---	---
1	Renewed ESS Permit	2/12/14	---

Date: 02/12/2014 | Drawn by: NJS | Check by: GEH
Project #: 042403 | Design by: GEH | Review by: MJN

STATE OF DELAWARE
DEPARTMENT OF NATURAL RESOURCES AND ENVIRONMENTAL CONTROL
DIVISION OF PARKS AND RECREATION & AUBURN VILLAGE LLC
NVF PROPERTIES
NVF YORKLYN SITE (DE-0071) YORKLYN, DELAWARE
EROSION AND SEDIMENT CONTROL PLAN

CONSTRUCTION DETAILS
SHEET 4

DRAWING NO.
C-153

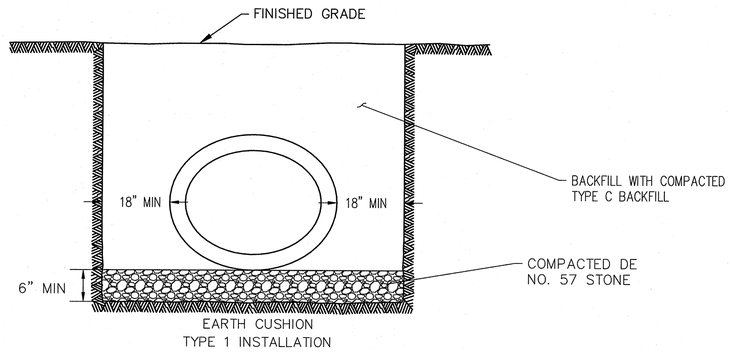

1 / C-154 PIPE BEDDING – STORM DRAINS 01 AND 02

REFERENCE: RINKER MATERIALS TYPE 1 STANDARD INSTALLATION TRENCH OR APPROVED EQUAL
N.T.S.

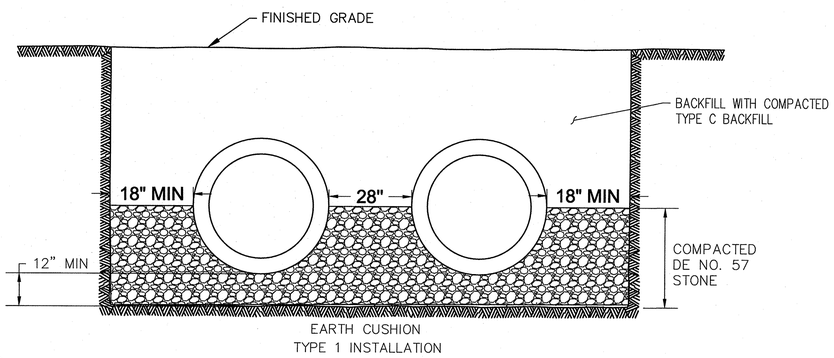

2 / C-154 PIPE BEDDING – CULVERT 01

REFERENCE: RINKER MATERIALS TYPE 1 STANDARD INSTALLATION TRENCH OR APPROVED EQUAL
N.T.S.

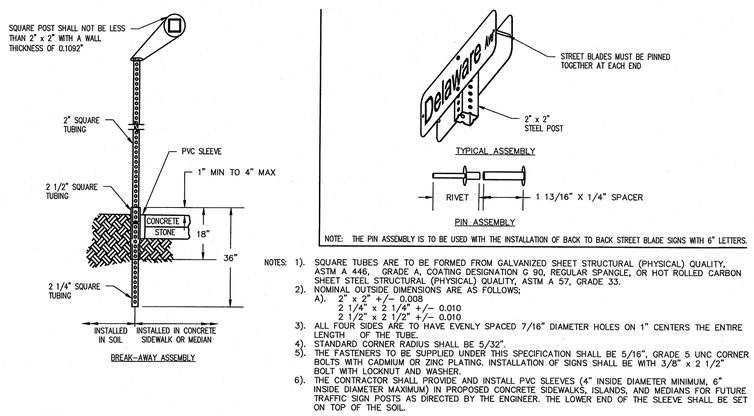

NOTES:
1). SQUARE TUBES ARE TO BE FORMED FROM GALVANIZED SHEET STRUCTURAL (PHYSICAL) QUALITY, ASTM A 446, GRADE A, COATING DESIGNATION G 90, REGULAR SPANGLE, OR HOT ROLLED CARBON SHEET STEEL, STRUCTURAL (PHYSICAL) QUALITY, ASTM A 57, GRADE 33.
2). NOMINAL OUTSIDE DIMENSIONS ARE AS FOLLOWS;
A). 2" x 2" +/– 0.008
2 1/4" x 2 1/4" +/– 0.010
2 1/2" x 2 1/2" +/– 0.010
3). ALL FOUR SIDES ARE TO HAVE EVENLY SPACED 7/16" DIAMETER HOLES ON 1" CENTERS THE ENTIRE LENGTH OF THE TUBE.
4). STANDARD CORNER RADIUS SHALL BE 5/32".
5). THE FASTENERS TO BE SUPPLIED UNDER THIS SPECIFICATION SHALL BE 5/16", GRADE 5 UNC CORNER BOLTS WITH CADMIUM OR ZINC PLATING. INSTALLATION OF SIGNS SHALL BE WITH 3/8" x 2 1/2" BOLT WITH LOCKNUT AND WASHER.
6). THE CONTRACTOR SHALL PROVIDE AND INSTALL PVC SLEEVES (4" INSIDE DIAMETER MINIMUM, 6" INSIDE DIAMETER MAXIMUM) IN PROPOSED CONCRETE SIDEWALKS, ISLANDS, AND MEDIANS FOR FUTURE TRAFFIC SIGN POSTS AS DIRECTED BY THE ENGINEER. THE LOWER END OF THE SLEEVE SHALL BE SET ON TOP OF THE SOIL.

3 / C-154 BREAKAWAY SIGN POST

DELDOT CONSTRUCTION DETAILS SHEET T-15 (2009)
NTS

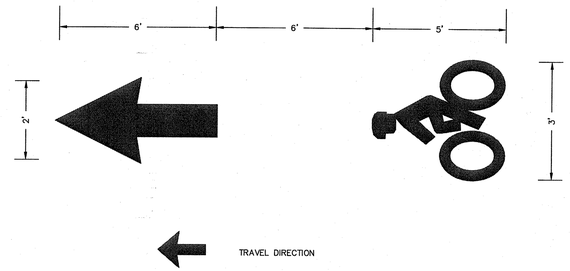

4 / C-154 BIKE MARKING

DELAWARE MUTCD PAGE 9C-10 (2011)
NTS

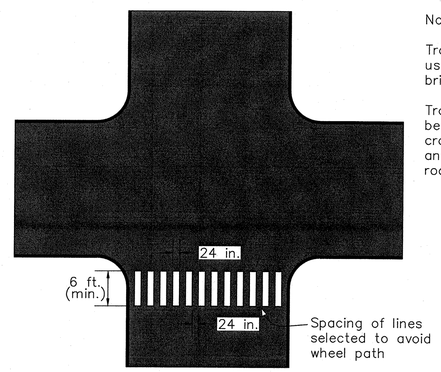

Notes:

Transverse crosswalks should be used to delineate patterned and brick crosswalks.

Transverse crosswalks may also be used for temporary crosswalks and on non-state maintained roadways.

5 / C-154 CROSSWALK MARKING

DELAWARE MUTCD PAGE 3B-65 (2011)
NTS

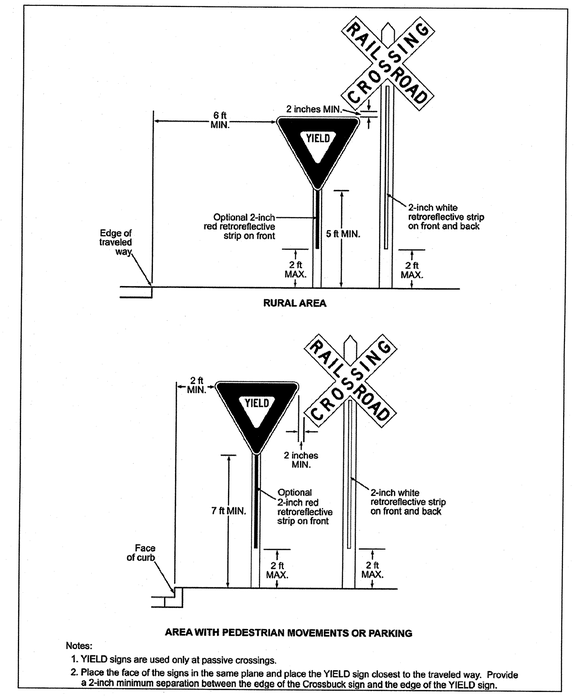

Notes:
1. YIELD signs are used only at passive crossings.
2. Place the face of the signs in the same plane and place the YIELD sign closest to the traveled way. Provide a 2-inch minimum separation between the edge of the Crossbuck sign and the edge of the YIELD sign.

6 / C-154 RAILROAD CROSSING

DELAWARE MUTCD PAGE 8B-3 (2011)
NTS

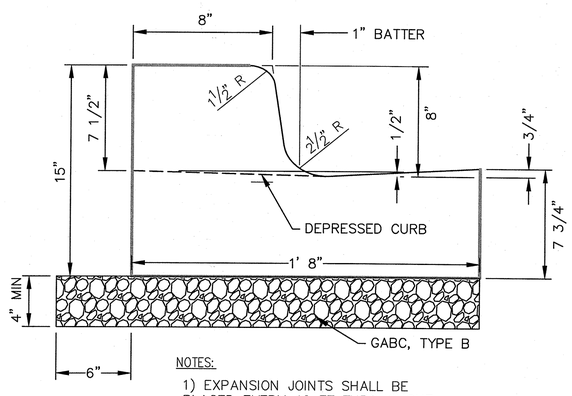

NOTES:

1) EXPANSION JOINTS SHALL BE PLACED EVERY 40 FT THROUGHOUT ENTIRE LENGTH OF CURB
2) LONGITUDINAL JOINTS SHALL BE CONSTRUCTED IN 10 FT SECTIONS

7 / C-154 INTEGRAL P.C.C. CURB AND GUTTER TYPE 3-8

DELDOT CONSTRUCTION DETAILS SHEET C-1-2 (2012)
NTS

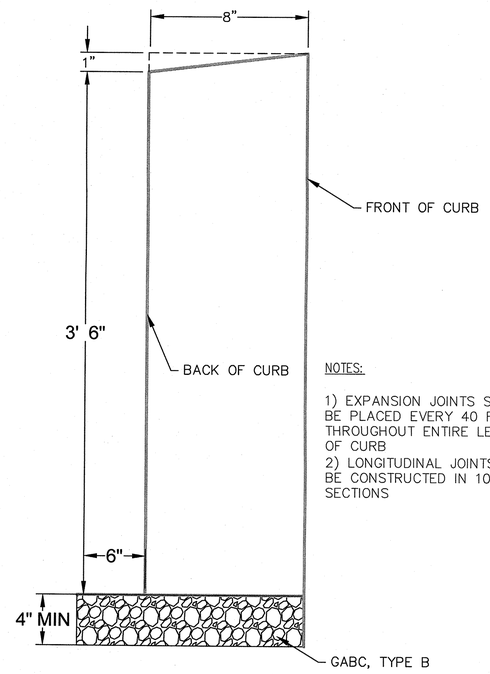

NOTES:

1) EXPANSION JOINTS SHALL BE PLACED EVERY 40 FT THROUGHOUT ENTIRE LENGTH OF CURB
2) LONGITUDINAL JOINTS SHALL BE CONSTRUCTED IN 10 FT SECTIONS

8 / C-154 8" P.C.C. FLUSH CURB

NTS

BLACK & VEATCH
Federal Services Div.
200 BELLEVUE PARKWAY, SUITE 215
WILMINGTON, DELAWARE
PHONE: (302) 798-0200 FAX: (302) 798-0201
WEBSITE: WWW.BV.COM

Rev.	Description	Date	Apr.
8	---	---	---
7	---	---	---
6	---	---	---
5	---	---	---
4	---	---	---
3	---	---	---
2	---	---	---
1	Renewed E&S Permit	2/12/14	---

Date:	Drawn by:	Check by:
02/12/2014	NJS	GEH
Project #:	Design by:	Review by:
042403	GEH	MJN

STATE OF DELAWARE
DEPARTMENT OF NATURAL RESOURCES AND ENVIRONMENTAL CONTROL
DIVISION OF PARKS AND RECREATION & AUBURN VILLAGE LLC
NVF PROPERTIES
NVF YORKLYN SITE (DE-0071) YORKLYN, DELAWARE
EROSION AND SEDIMENT CONTROL PLAN

CONSTRUCTION DETAILS
SHEET 5

DRAWING NO.
C-154

INLET BOX SCHEDULE		
L	W	FABRICATION TOLERANCE
66"	48"	+6"

WALL REINFORCEMENT SCHEDULE		
INTERIOR WALL DIMENSION	AREA OF HORIZONTAL REINFORCEMENT PER FOOT	AREA OF VERTICAL REINFORCEMENT PER FOOT
	IN^2	IN^2
LESS THAN 4'	0.132	0.132
4' TO 4.5'	0.163	0.132
4.5' TO 5'	0.198	0.132
5' TO 5.5'	0.239	0.132
5.5' TO 6'	0.284	0.132

INLET BOX SIZE		COVER SLAB SIZE (L X W)	DRAINAGE INLET TOP UNIT	INLET TOP UNIT REBAR LENGTH	INLET TOP UNIT LIMIT OF PAYMENT	INLET TOP UNIT BAR BENDING DIAGRAM	FRAME & GRATE (FOUND ON DETAIL D-5, SHEET 2)	MAXIMUM PIPE SIZE (SEE NOTE 11)		MAXIMUM HEIGHT (TO TOP OF BOX)
L	W							L	W	
66"	48"	78" x 60" (DETAIL D-5, SHEET 4)	TYPES A, B, C, D, & E (DETAIL D-5, SHEET 3)	111"	114"	S501 (DETAIL D-5, SHEET 3)	TYPES 1 THRU 4 GRATE STANDARD DRAINAGE INLET FRAME	48"	36"	11'-4"

NOTES:

1. INLET BOXES SHALL BE PRECAST OR CAST-IN-PLACE.
2. PIPES SHALL NOT BE INSTALLED THROUGH ANY CORNER OF THE INLET BOX.
3. RISER SECTIONS MAY BE USED FOR DEEP INLET BOXES.
4. PIPES MAY BE INSTALLED NEAR OR THROUGH JOINTS FOR RISER SECTIONS.
5. CONCRETE FLOW CHANNEL SHALL BE WARPED FOR POSITIVE DRAINAGE.
6. WHEN INLET BOX IS PRECAST, PIPE OPENING SHALL BE BETWEEN 3" AND 4" LARGER THAN OUTSIDE DIAMETER OF PIPE AND SHALL NOT ENCROACH ON ADJACENT WALL.
7. INLET BOX SHALL BE PLACED ON A MINIMUM OF 6" OF Del. No. 57 STONE WHICH MUST BE LEVEL
8. MAXIMUM PIPE SIZES ARE CALCULATED USING REINFORCED CONCRETE PIPE PERPENDICULAR TO THE WALL.
9. STEPS ARE REQUIRED ON ALL BOXES WHOSE DEPTH IS GREATER THAN 4'-0" (1219).

INLET 0101

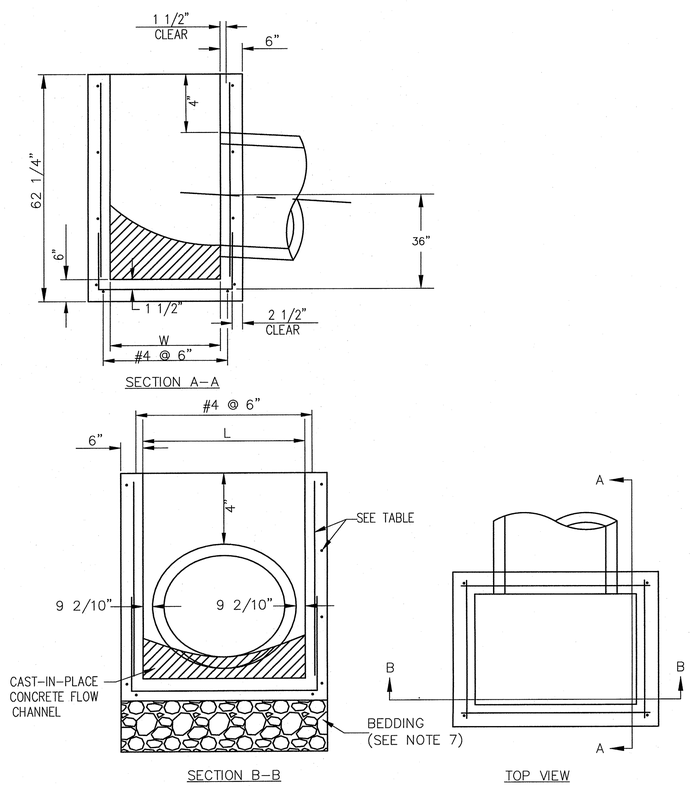

INLET 0201

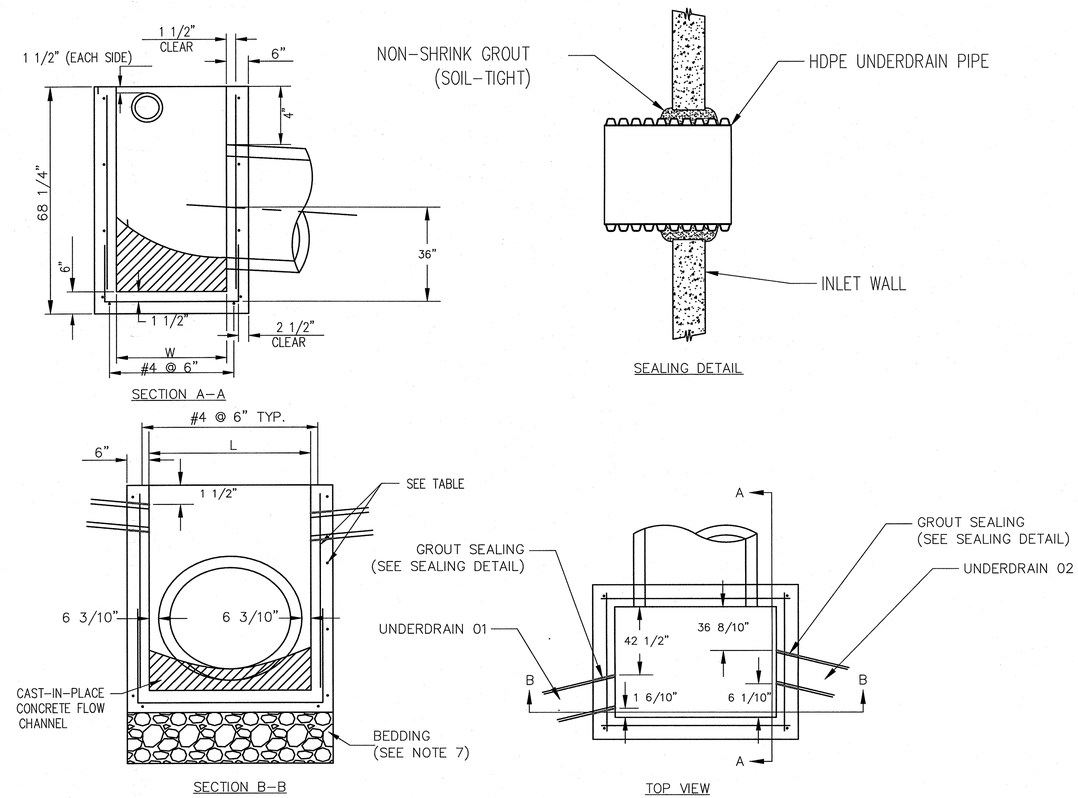

1 / C-155 66" X 48" DRAINAGE INLET BOX

SEE SHEET C-141 FOR ELEVATIONS OF GRATES AND INVERTS
SEE SHEET C-158, DETAIL 4 FOR COVER AND SLAB DETAIL
SEE SHEET C-158, DETAIL 5 FOR INLET FRAME AND GRATE
DELAWARE CONSTRUCTION DETAILS SHEET D-4 (2009)
NTS

BLACK & VEATCH
Federal Services Div.
200 DELAWARE AVENUE, SUITE 215
TOWSON, MARYLAND
PHONE: (302) 798-0200 FAX: (302) 798-0201
WEBSITE: WWW.BV.COM

Rev.	Description	Date	Apr.
1	Renewed E&S Permit	2/12/14	---
2	---	---	---
3	---	---	---
4	---	---	---
5	---	---	---
6	---	---	---
7	---	---	---
8	---	---	---

Date:	Drawn by:	Check by:
02/12/2014	NJS	GEH
Project #:	Design by:	Review by:
042403	GEH	MJN

STATE OF DELAWARE
DEPARTMENT OF NATURAL RESOURCES AND ENVIRONMENTAL CONTROL
DIVISION OF PARKS AND RECREATION & AUBURN VILLAGE LLC
NVF PROPERTIES
NVF YORKLYN SITE (DE-0071) YORKLYN, DELAWARE
EROSION AND SEDIMENT CONTROL PLAN

CONSTRUCTION DETAILS
SHEET 6

DRAWING NO.
C-155

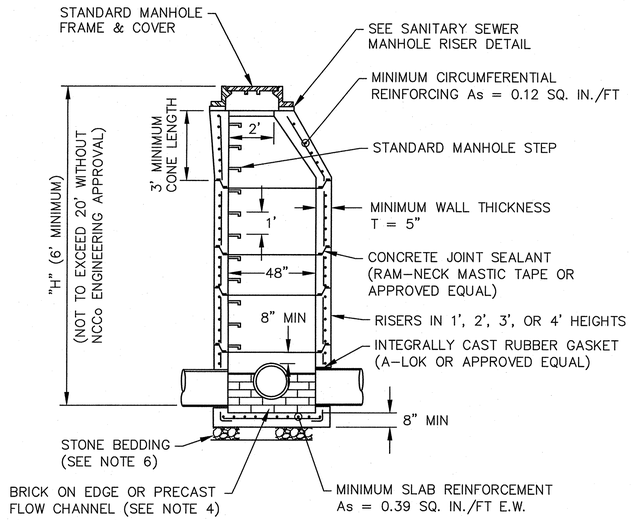

TYPE A-2 MANHOLE

SANITARY SEWER PRECAST MANHOLE	MANHOLE SIZE	RIM ELEV.	MANHOLE BOTTOM ELEV.	SLEEVE INVERT ELEV.
SS MH 0101	48"	178.62'	168.24'	168.91'
SS MH 0102	48"	179.20'	168.04'	168.71'

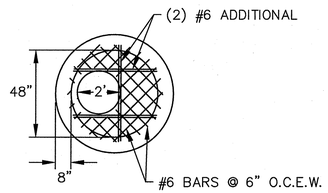

REINFORCEMENT FOR FLAT SLAB TOPS

NOTES

1. UNLESS OTHERWISE NOTED, MANHOLE CONICAL AND FLAT SLAB TOPS, RISERS AND BASE SECTIONS SHALL BE FURNISHED IN STRICT ACCORDANCE WITH ASTM DESIGNATION C478 (OR LATEST) FOR PRECAST REINFORCED CONCRETE MANHOLES.
2. ALL MANHOLES SHALL BE 4,000 PSI MIN. CONCRETE, TYPE II PORTLAND CEMENT.
3. MANHOLE STEPS SHALL BE SPACED AS SHOWN IN A SINGLE VERTICAL ALIGNMENT. THE STEPS SHALL NOT BE STAGGERED. CENTERLINE OF STEP ORIENTATION TO BE ALIGNED OVER TOP OF BENCH AND NOT FLOW CHANNEL. BOTTOM STEP SHALL BE WITHIN 12" OF THE BENCH.
4. FLOW CHANNEL IN MANHOLE MAY BE BRICK ON EDGE OR PRECAST CONCRETE (4,000 PSI MIN.) NO CAST IN PLACE FLOW CHANNELS. SLOPE OF BENCH TO BE 1/4"/FT. MIN. TOWARD CHANNEL.
5. SLOPE ACROSS MANHOLE CHANNEL TO BE 0.1' MIN.
6. STONE BEDDING SHALL CONFORM TO SPECIFICATION 20.04-1 OF THE NEW CASTLE COUNTY STANDARD SPECIFICATIONS FOR CONSTRUCTION.

1 SANITARY SEWER PRECAST MANHOLE

C-156 NEW CASTLE COUNTY, DELAWARE DEPARTMENT OF SPECIAL SERVICES STANDARD DETAILS SHEET SS-MH-1
·OR APPROVED EQUIVALENT
NTS

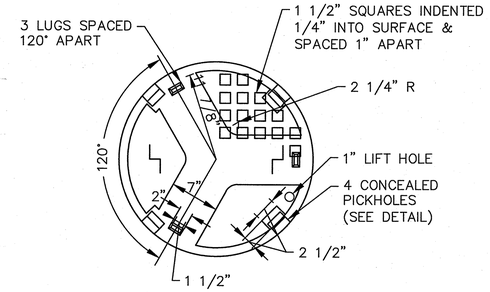

MANHOLE PLAN VIEW

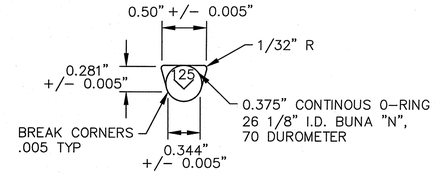

MACHINED DOVE-TAIL GROOVE FOR O-RING DETAIL

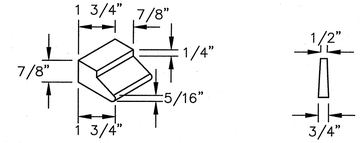

CONCEALED PICKHOLE DETAIL RIB DETAIL

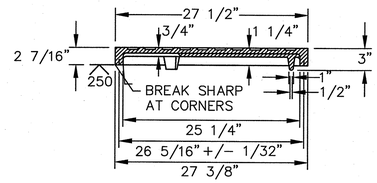

MANHOLE COVER

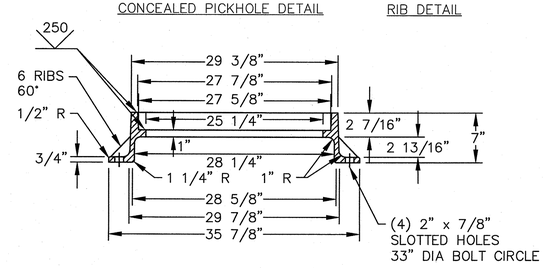

MANHOLE FRAME

NOTES

1. MATERIAL: GRAY IRON ASTM A48, CLASS 35.
2. TOLERANCE: ±1/16" EXCEPT AS NOTED (FINISH MAY REQUIRE ADDITIONAL MACHINING).

3 SANITARY SEWER SELF SEALING MANHOLE FRAME & COVER

C-156 NEW CASTLE COUNTY, DELAWARE DEPARTMENT OF SPECIAL SERVICES STANDARD DETAILS SHEET SS-MH-9
·OR APPROVED EQUIVALENT
NTS

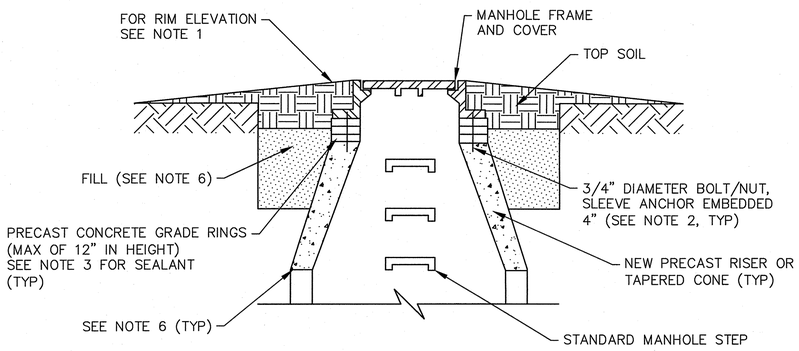

MANHOLE RISER SECTION NON-PAVED AREA

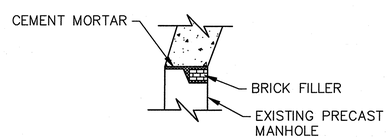

JOINT DETAIL AT PRECAST MANHOLE

NOTES

1. IF NO RIM ELEVATION IS SHOWN, SET FRAME 1" TO 2" ABOVE SURROUNDING FINISHED GRADE AND TAPER SOIL TO TOP OF RIM.
2. FASTEN FRAME TO PRECAST RISER SECTION USING A MINIMUM OF TWO BOLTS. BOLT HOLES SHALL BE CAST INTO GRADE RINGS. NO FIELD DRILLING OF HOLES.
3. SEAL EACH RING JOINT BETWEEN FRAME AND ALL PRECAST GRADE RINGS USING SEALANT CONFORMING TO ASTM C920 AND SUITABLE FOR USE WITH MASONRY AND METAL MATERIALS. APPLY IN CONTINUOUS 1/2" BEADS.
4. BRICK MAY NOT BE USED AS A SUBSTITUTE FOR GRADE RINGS OR SHIMS.
5. SEAL PRECAST RISER TO COMPETENT LAYER OF BLOCK OR BRICK USING CEMENT MORTAR. IF EXISTING MANHOLE IS PRE-CAST CONCRETE, SECURE BRICK IN GROOVED JOINT WITH CEMENT MORTAR PRIOR TO PLACING RISER SECTION.
6. REPLACE ALL UNSUITABLE MATERIAL WITH ACCEPTABLE FILL, COMPACTED IN ACCORDANCE WITH THE STANDARD SPECIFICATIONS OR SUPPLEMENTAL SPECIFICATIONS.

2 SANITARY SEWER MANHOLE RISER STRUCTURE NON-PAVED AREA

C-156 NEW CASTLE COUNTY, DELAWARE DEPARTMENT OF SPECIAL SERVICES STANDARD DETAILS SHEET SS-MH-5
·OR APPROVED EQUIVALENT
NTS

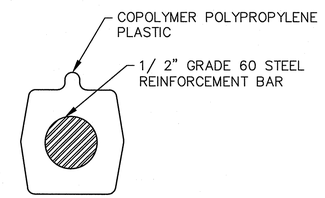

SECTION A-A

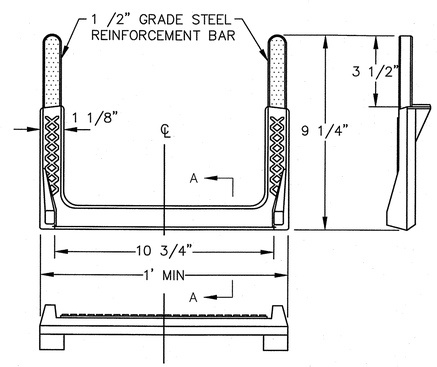

MANHOLE STEP

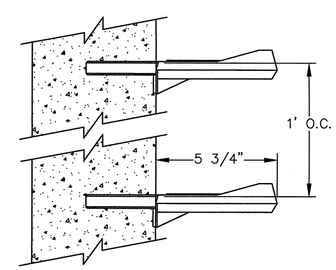

TYPICAL WALL SECTION

4 SANITARY SEWER MANHOLE STEP

C-156 NEW CASTLE COUNTY, DELAWARE DEPARTMENT OF SPECIAL SERVICES STANDARD DETAILS SHEET SS-MH-10
·OR APPROVED EQUIVALENT
NTS

BLACK & VEATCH
Federal Services Div.
200 BELLEVUE PARKWAY, SUITE 215
WILMINGTON, DELAWARE
PHONE: (302) 798-0200 FAX: (302) 798-0201
WEBSITE: WWW.BV.COM

Rev.	Description	Date	Apr.
1	Renewed G&S Permit	2/12/14	-
2	-	-	-
3	-	-	-
4	-	-	-
5	-	-	-
6	-	-	-
7	-	-	-
8	-	-	-

Date: 02/12/2014 | Drawn by: NJS | Check by: GEH
Project #: 042403 | Design by: GEH | Review by: MJN

STATE OF DELAWARE
DEPARTMENT OF NATURAL RESOURCES AND ENVIRONMENTAL CONTROL
DIVISION OF PARKS AND RECREATION & AUBURN VILLAGE LLC
NVF PROPERTIES
NVF YORKLYN SITE (DE-0071) YORKLYN, DELAWARE
EROSION AND SEDIMENT CONTROL PLAN

CONSTRUCTION DETAILS
SHEET 7

DRAWING NO.
C-156

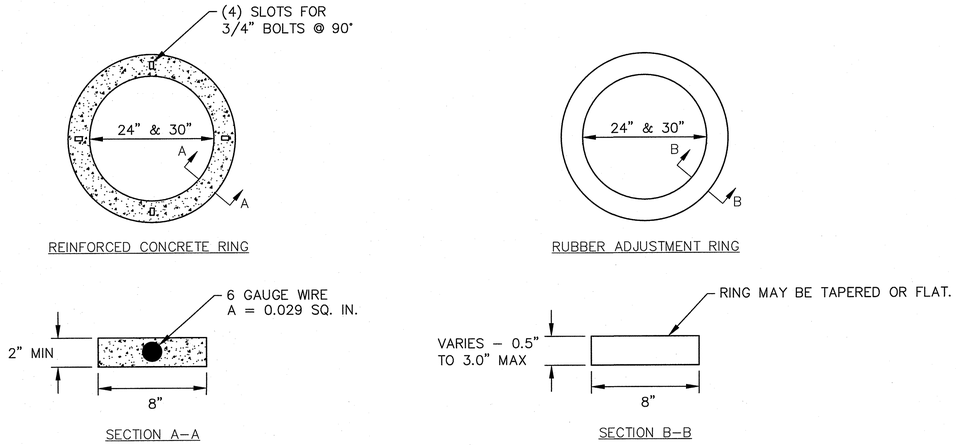

NOTES

1. DESIGN MEETS REQUIREMENTS OF ASTM STANDARD C–478.
2. APPROXIMATE WEIGHT OF ONE REINFORCED CONCRETE RING:
   24" = 140 LBS.
   30" = 165 LBS.

NOTES

1. USE GNR INFRA–RISER RUBBER GRADE RINGS AS DISTRIBUTED BY EAST JORDAN IRON WORKS, INC. EAST JORDAN, MICHIGAN OR APPROVED EQUAL.
2. POLYURETHANE ADHESIVE SEALANT, CONFORMING TO ASTM–C 920, OR EQUIVALENT, TO BE USED BETWEEN ALL CONTACT SURFACES. SEALANT TO BE APPLIED ON A DIAMETER 1" SMALLER THAN THE OUTSIDE DIAMETER OF THE RUBBER RISER.

1 / C–157 SANITARY SEWER GRADE RING

NEW CASTLE COUNTY, DELAWARE DEPARTMENT OF SPECIAL SERVICES STANDARD DETAILS SHEET SS–MH–7
OR APPROVED EQUIVALENT
NTS

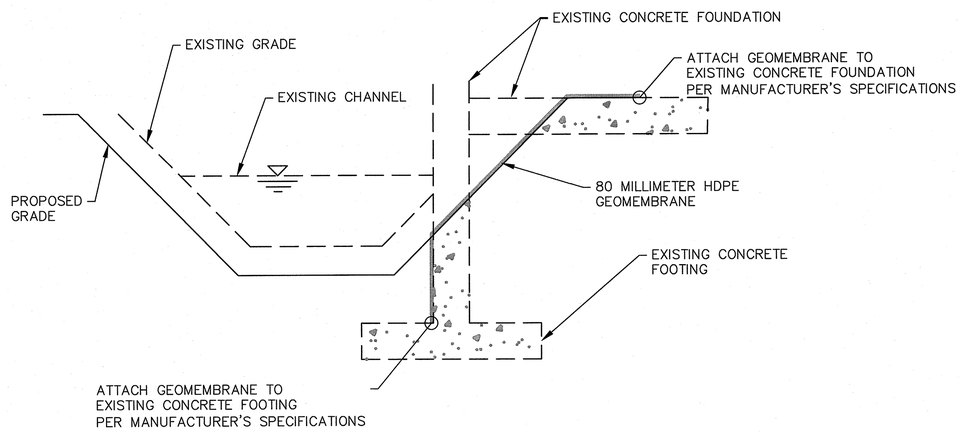

2 / C–157 HDPE GEOMEMBRANE

ACCUGEO 80 MILLIMETER HDPE GEOMEMBRANE OR APPROVED EQUIVALENT
NTS

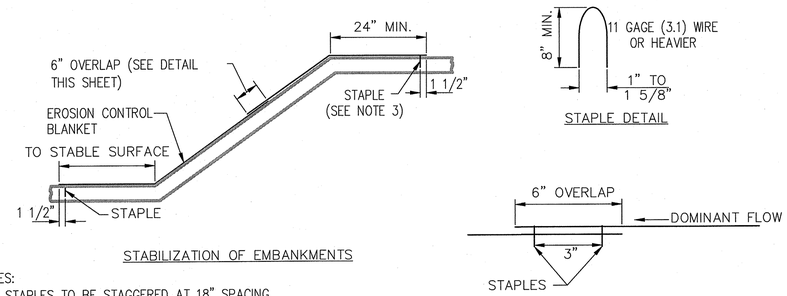

NOTES:

1. STAPLES TO BE STAGGERED AT 18" SPACING.
2. TOPSOIL UNDER EROSION CONTROL BLANKET IS TO BE TRACKED AND SEEDED.
3. WHEN OFFSITE RUNOFF OCCURS, ADDITIONAL MEASURES AS DIRECTED BY THE ENGINEER SHALL BE USED TO ENSURE STABILITY OF EMBANKMENT.

3 / C–157 EROSION CONTROL BLANKET

NORTH AMERICAN GREEN S75 OR APPROVED EQUIVALENT
DELAWARE CONSTRUCTION DETAILS SHEET E–9 (2005)
N.T.S.

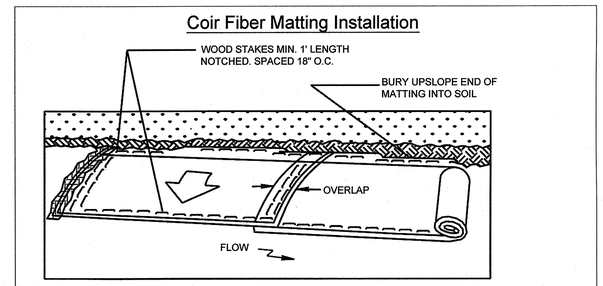

COIR FIBER MAT NOTES:

KEY-IN THE MATTING BY PLACING THE TOP ENDS OF THE MATTING IN A 6" TRENCH, 6"IN DEPTH. BACKFILL THE TRENCH AND TAMP FIRMLY TO CONFORM TO THE CHANNEL CROSS-SECTION. SECURE WITH A ROW OF STAKES ABOUT 1" DOWN SLOPE FROM THE TRENCH.

PLACE COIR FIBER MATTING AFTER THE SLOPE OR SWALE HAS BEEN DRESSED TO DEFINE THE FLOW AND THE DESIGNATED SEEDING. AND SOIL SUPPLIMENTS, HAVE BEEN APPLIED. PLACE COIR FIBER MATTING TO CONFORM TO THE SHAPE OF THE SOIL SURFACE.

SPREAD THE MAT EVENLY AND SMOOTHLY WITHOUT SURFACE STRETCHING, AND ENSURE CONTACT WITH SOIL AT ALL POINTS. UNROLL FABRIC PARALLEL TO FLOW DIRECTION. DRIVE ALL STAKES FLUSH WITH THE SOIL SURFACE

6" OVERLAP OF MATTING WHERE TWO OR MORE STRIP WIDTHS ARE REQUIRED. STAKE ON 18" CENTER.
WHERE ONE ROLL OF MATTING ENDS AND ANOTHER BEGINS, THE END OF THE END OF THE TOP STRIP SHALL OVERLAP THE UPPER END OF THE LOWER STRIP BY 6", SHIPLAP FASHION. REINFORCE THE OVERLAP WITH A DOUBLE ROW OF STAKES SPACED 6" APART IN A STAGGERED PATTERN ON EITHER SIDE.

TERMINATE MAT INSTALLATION BY TRENCHING UNDER AT LEAST 6" OF FABRIC AND STAKING SECURELY ALONG THE TRENCH.

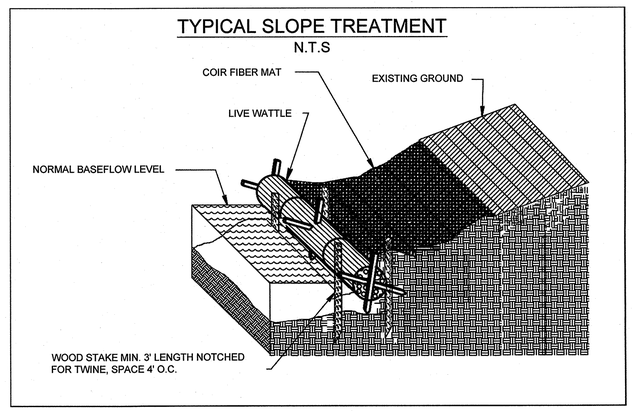

4 / C–157 COIR FIBER MATTING INSTALLATION AND TYPICAL SLOPE TREATMENT FOR USE WITH LIVE WATTLE

CONTROL MAT OCR 30 OR APPORVED EQUIVALENT
NTS

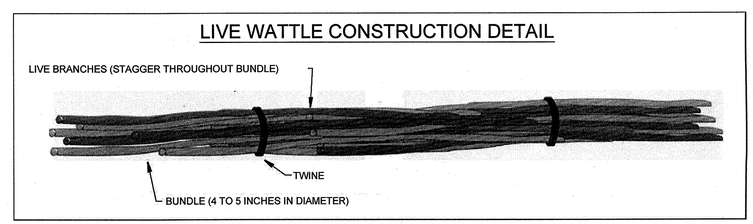

5 / C–157 LIVE WATTLE CONSTRUCTION

BLACK WILLOW BUNDLES OR APPROVED EQUIVALENT
NTS

BLACK & VEATCH
Federal Services Div.
200 BELLEVUE PARKWAY, SUITE 215
WILMINGTON, DELAWARE
PHONE: (302) 798-0200 FAX: (302) 798-0201
WEBSITE: WWW.BV.COM

Rev.	Description	Date	Apr.
8	---	---	---
7	---	---	---
6	---	---	---
5	---	---	---
4	---	---	---
3	---	---	---
2	---	---	---
1	Renewed E&S Permit	2/12/14	---

Date: 02/12/2014 | Drawn by: NJS | Check by: GEH
Project #: 042403 | Design by: GEH | Review by: MJN

STATE OF DELAWARE
DEPARTMENT OF NATURAL RESOURCES AND ENVIRONMENTAL CONTROL
DIVISION OF PARKS AND RECREATION & AUBURN VILLAGE LLC

NVF PROPERTIES
NVF YORKLYN SITE (DE-0071) YORKLYN, DELAWARE

EROSION AND SEDIMENT CONTROL PLAN

CONSTRUCTION DETAILS
SHEET 8

DRAWING NO.
C-157

Concrete Elliptical Pipe
18" – 144" Equivalent Diameter

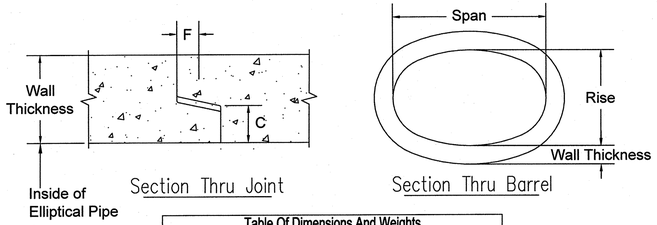

Table Of Dimensions And Weights							
Round Equivalent (inches)	Inside Dimension (inches) Rise	Inside Dimension (inches) Span	Wall Thickness (inches)	C (inches)	F (inches)	Full Flow Water Area (Sq. Ft.)	Approx. Weight (Lbs / Ft.)
24	19	30	3 1/4	1 1/4	2	3.28	310
30	24	38	3 3/4	1 3/8	2 1/2	5.10	450

Notes:
1. Produced to meet ASTM Specifications.

1 / C-158 CONCRETE ELLIPTICAL PIPE

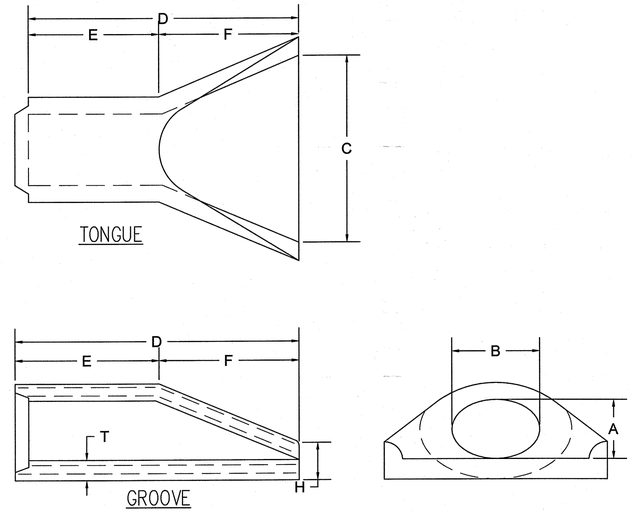

Equi.	A	B	C	D	E	F	T	H
in.	in.	in.	in.	in.	in.	in.	in.	in.
24	19	30	48	72	42	30	3	12
30	24	38	61	72	21	51	5½	13

2 / C-158 ELLIPTICAL FLARED END SECTION

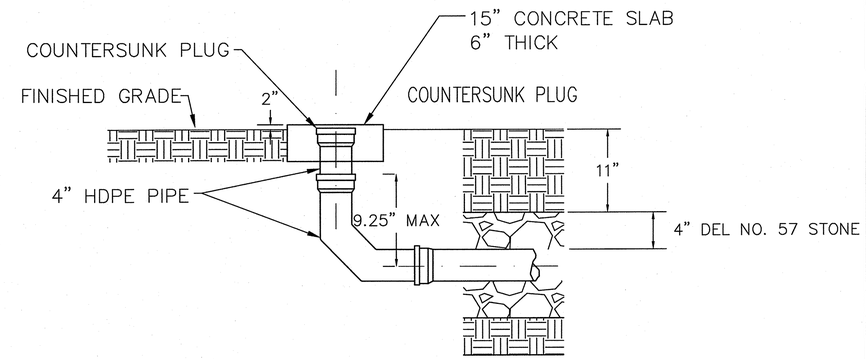

3 / C-158 4" HDPE LATERAL CLEANOUT

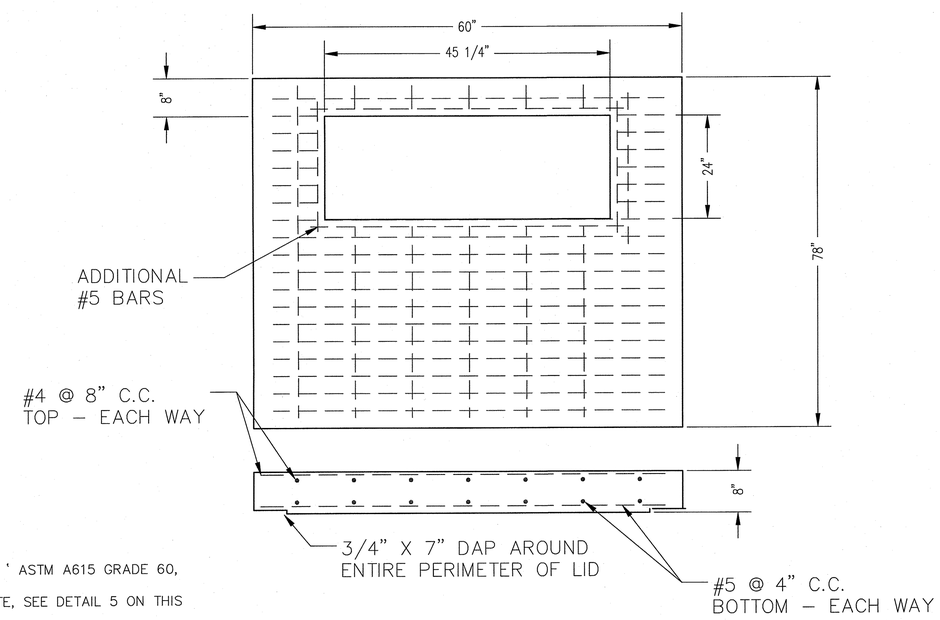

NOTES:
1. REINFORCEMENT ' ASTM A615 GRADE 60, MIN. 1 1/2"
2. FOR INLET GRATE, SEE DETAIL 5 ON THIS SHEET

4 / C-158 DRAINAGE INLET COVER SLAB
N.T.S.

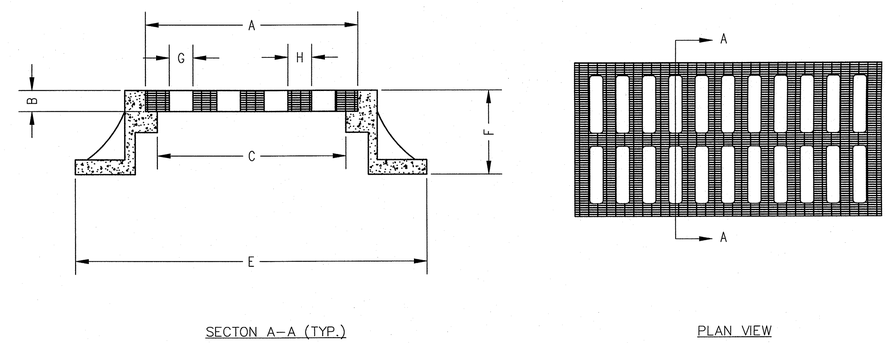

INLET STRUCTURE	MODEL**	DIMENSION						
		A	B	C	E	F	G	H
INLET 0101	NEENAH FOUNDRY R-1879-B8G	25 3/4" X 49 3/4"	1 1/2"	24" X 48"	30" X 54"	4"	3/4" X 5 1/8"	1"
INLET 0201	NEENAH FOUNDRY R-3457-C2	36" X 48"	1 3/4"	***	42" X 54"	5 1/2"	1 7/8" X 21 3/8"	1 1/4"

** MUST USE EITHER LISTED MODEL OR AN APPROVED EQUIVALENT
*** FRAMES PROVIDED WITH LUGS SUPPORTING GRATES AT CORNERS

5 / C-158 DRAINAGE INLET FRAME AND GRATE – TYPE A
SEE SHEET C-141 FOR ELEVATIONS OF GRATES AND INVERTS
SEE THIS SHEET, DETAIL 4 FOR COVER AND SLAB DETAILS
NTS

BLACK & VEATCH
Federal Services Div.
200 BELLEVUE PARKWAY, SUITE 215
WILMINGTON, DELAWARE
PHONE: (302) 798-0200 FAX: (302) 798-0201
WEBSITE: WWW.BV.COM

Rev.	Description	Date	Apr.
8	---	---	---
7	---	---	---
6	---	---	---
5	---	---	---
4	---	---	---
3	---	---	---
2	---	---	---
1	Removed ESG Permit	2/12/14	---

Date: 02/12/2014 | Drawn by: NJS | Check by: GEH
Project #: 042403 | Design by: GEH | Review by: MJN

STATE OF DELAWARE
DEPARTMENT OF NATURAL RESOURCES AND ENVIRONMENTAL CONTROL
DIVISION OF PARKS AND RECREATION & AUBURN VILLAGE LLC
NVF PROPERTIES
NVF YORKLYN SITE (DE-0071) YORKLYN, DELAWARE
EROSION AND SEDIMENT CONTROL PLAN

CONSTRUCTION DETAILS
SHEET 9

DRAWING NO.
C-158

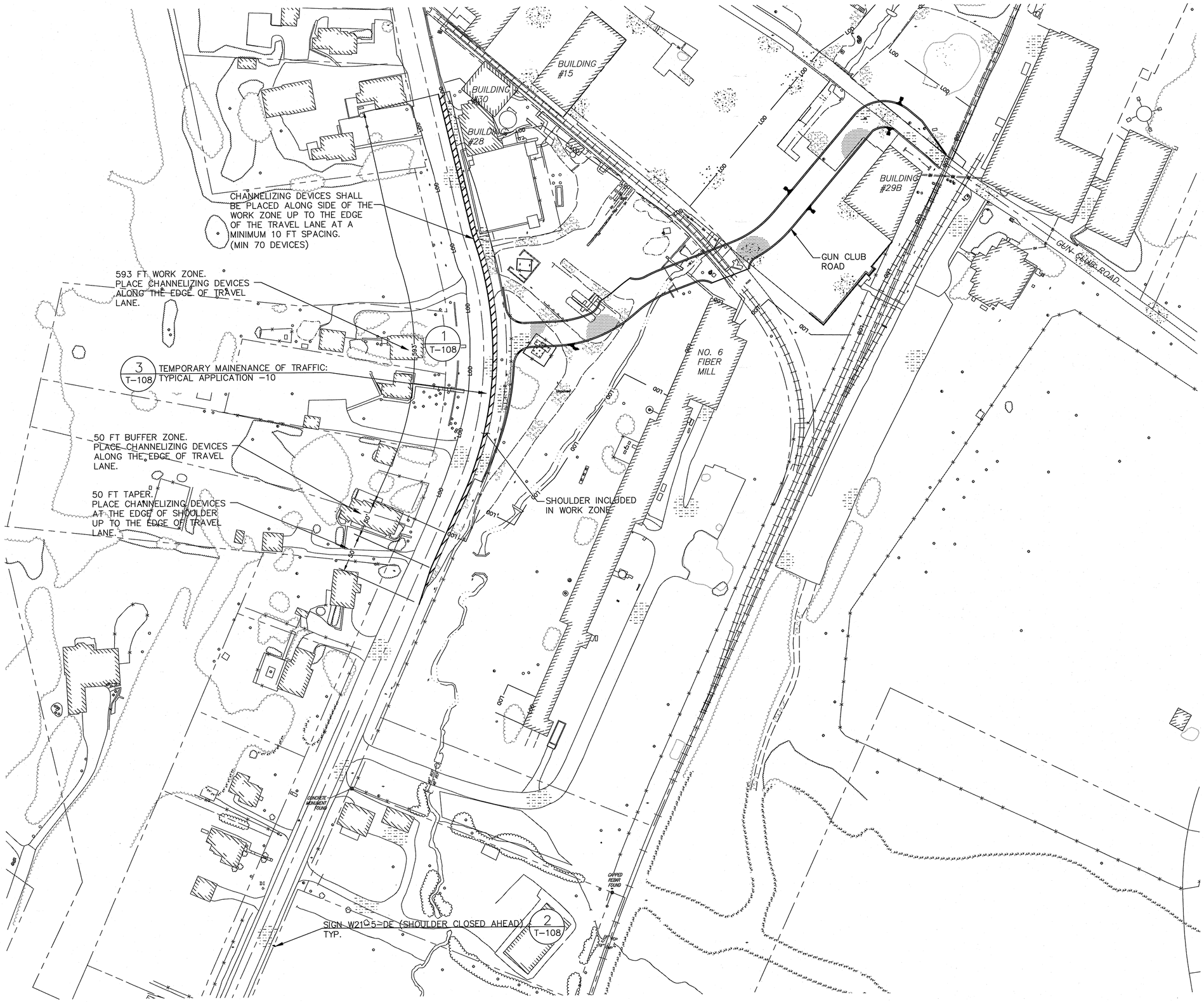

NOTES:

1. LOCATION OF TEMPORARY SIGN ON THE DRAWING INDICATES THE SIDE OF THE ROAD THE SIGN WILL BE LOCATED ON. THE SIGN SHALL FACE ON-COMING TRAFFIC.
2. TEMPORARY TRAFFIC SIGNS SHALL BE INSTALLED AND REMAIN IN PLACE DURING THE ENTIRE CONSTRUCTION OF THE NEW GUN CLUB ROAD ENTRANCE.
3. 2-WAY TRAFFIC MUST BE RESTORED TO DELDOT STANDARDS AT THE END OF EACH DAY.

BLACK & VEATCH
Federal Services Div.
200 BELLEVUE PARKWAY, SUITE 215
WILMINGTON, DELAWARE
VOICE: (302) 798-1000 FAX: (302) 798-0201
WEBSITE: WWW.BV.COM

Rev.	Description	Date	Apr.
8	---	---	---
7	---	---	---
6	---	---	---
5	---	---	---
4	---	---	---
3	---	---	---
2	---	---	---
1	Revised E&S Permit	2/12/14	---

Date: 02/12/2014	Drawn by: NJS	Check by: GEH	
Project #: 042403	Design by: GEH	Review by: HUN	

STATE OF DELAWARE
DEPARTMENT OF NATURAL RESOURCES AND ENVIRONMENTAL CONTROL
DIVISION OF PARKS AND RECREATION & AUBURN VILLAGE LLC

NVF PROPERTIES
NVF YORKLYN SITE (DE-0071) YORKLYN, DELAWARE

EROSION AND SEDIMENT CONTROL PLAN

ENTRANCE MAINTENANCE OF TRAFFIC PLAN

DRAWING NO.
T-101

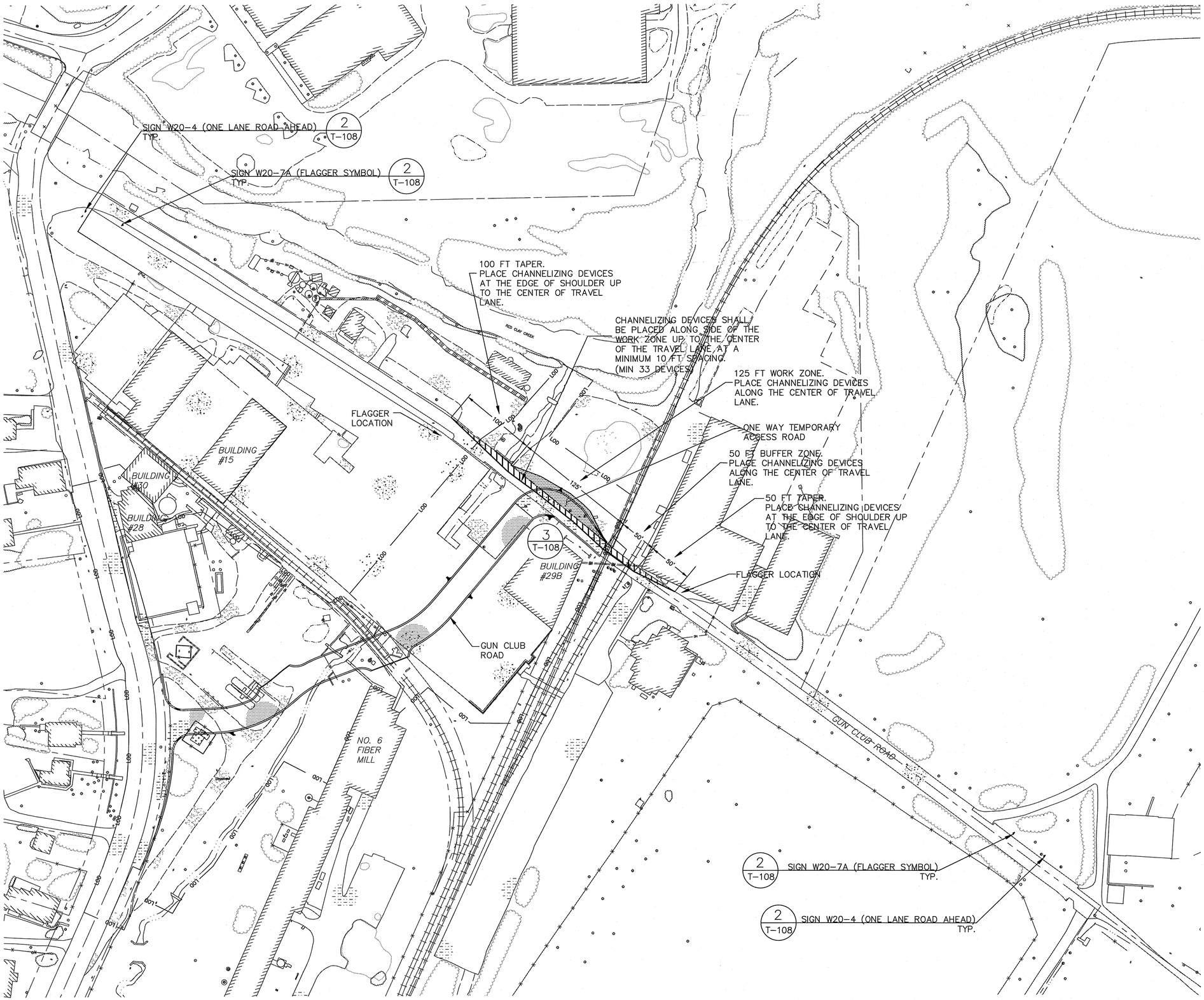

NOTES:

1. LOCATION OF TEMPORARY SIGN ON THE DRAWING INDICATES THE SIDE OF THE ROAD THE SIGN WILL BE LOCATED ON. THE SIGN SHALL FACE ON-COMING TRAFFIC.
2. TEMPORARY TRAFFIC SIGNS SHALL BE INSTALLED AND REMAIN IN PLACE UNTIL NEW GUN CLUB ROAD IS OPERATIONAL.
3. SEE SHEET T-107 FOR SEQUENCE OF CONSTRUCTION.
4. 2-WAY TRAFFIC MUST BE RESTORED TO DELDOT STANDARDS AT THE END OF EACH WORK DAY.

BLACK & VEATCH
Federal Services Div.
200 BELLEVUE PARKWAY, SUITE 215
WILMINGTON, DELAWARE 19809
PHONE: (302) 798-1200 FAX: (302) 798-0201
WEBSITE: WWW.BV.COM

Rev.	Description	Date
1	Removed E&S Permit	2/12/14
2	---	---
3	---	---
4	---	---
5	---	---
6	---	---
7	---	---
8	---	---

Date: 02/12/2014	Drawn by: DJS	Check by: GER1	
Project #: 0/24/03	Design by: GER1	Review by: MWN	

STATE OF DELAWARE
DEPARTMENT OF NATURAL RESOURCES AND ENVIRONMENTAL CONTROL
DIVISION OF PARKS AND RECREATION & AUBURN VILLAGE LLC

NVF PROPERTIES
NVF YORKLYN SITE (DE-0071) YORKLYN, DELAWARE

EROSION AND SEDIMENT CONTROL PLAN

GUN CLUB ROAD
MAINTENANCE OF
TRAFFIC PLAN
TEMPORARY ACCESS ROAD

DRAWING NO.
T-102

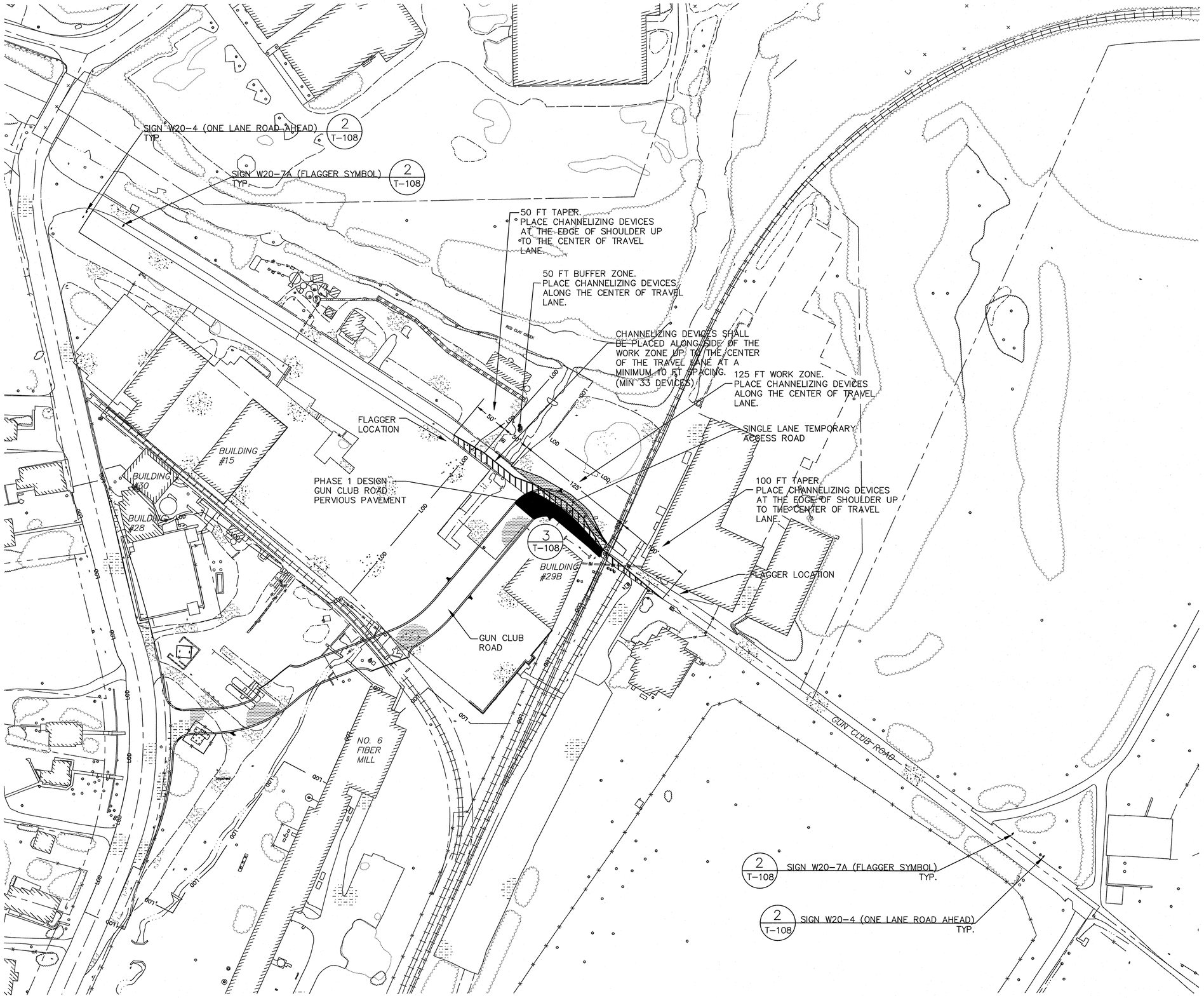

NOTES:

1. LOCATION OF TEMPORARY SIGN ON THE DRAWING INDICATES THE SIDE OF THE ROAD THE SIGN WILL BE LOCATED ON. THE SIGN SHALL FACE ON-COMING TRAFFIC.
2. TEMPORARY TRAFFIC SIGNS SHALL BE INSTALLED AND REMAIN IN PLACE UNTIL NEW GUN CLUB ROAD IS OPERATIONAL.
3. SEE SHEET T-107 FOR SEQUENCE OF CONSTRUCTION.
4. 2-WAY TRAFFIC SHALL BE RESTORED TO DELDOT STANDARDS AT THE END OF EACH WORK DAY.

BLACK & VEATCH
Federal Services Div.
200 BELLEVUE PARKWAY, SUITE 215
WILMINGTON, DELAWARE
PHONE: (302) 798-1000 FAX: (302) 798-0201
WEBSITE: WWW.BV.COM

Rev.	Description	Date	Apr.
1	Renewed ESCS Permit	2/12/14	---
2	---	---	---
3	---	---	---
4	---	---	---
5	---	---	---
6	---	---	---
7	---	---	---
8	---	---	---

Date: 02/12/2014	Drawn by: NJS	Check by: GEH
Project #: 042403	Design by: GEH	Review by: HJN

STATE OF DELAWARE
DEPARTMENT OF NATURAL RESOURCES AND ENVIRONMENTAL CONTROL
DIVISION OF PARKS AND RECREATION & AUBURN VILLAGE LLC

NVF PROPERTIES
NVF YORKLYN SITE (DE-0071) YORKLYN, DELAWARE

EROSION AND SEDIMENT CONTROL PLAN

GUN CLUB ROAD
MAINTENANCE OF
TRAFFIC PLAN
PHASE 1

DRAWING NO.
T-103

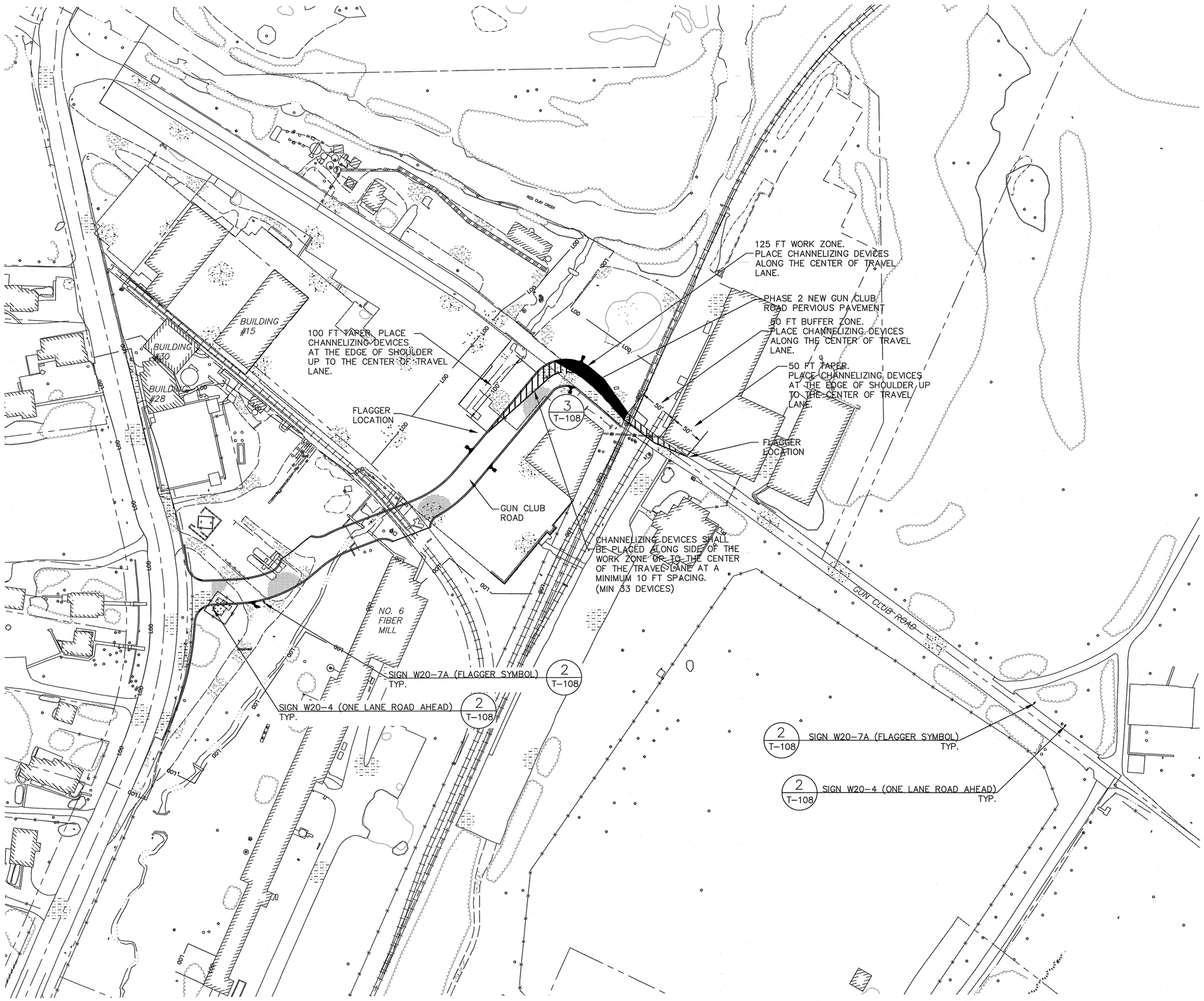

NOTES:

1. LOCATION OF TEMPORARY SIGN ON THE DRAWING INDICATES THE SIDE OF THE ROAD THE SIGN WILL BE LOCATED ON. THE SIGN SHALL FACE ON-COMING TRAFFIC.
2. TEMPORARY TRAFFIC SIGNS SHALL BE INSTALLED AND REMAIN IN PLACE UNTIL NEW GUN CLUB ROAD IS OPERATIONAL.
3. SEE SHEET T-107 FOR SEQUENCE OF CONSTRUCTION.
4. 2-WAY TRAFFIC MUST BE RESTORED TO DELDOT STANDARDS AT THE END OF EACH WORK DAY.

BLACK & VEATCH
Federal Services Div.
200 BELLEVUE PARKWAY, SUITE 215
WILMINGTON, DELAWARE
TELEPHONE: (302) 798-0000 FAX: (302) 798-0201
WEBSITE: WWW.BV.COM

Rev.	Description	Date	Apr.
8	---	---	---
7	---	---	---
6	---	---	---
5	---	---	---
4	---	---	---
3	---	---	---
2	---	---	---
1	Removed ESCS Permit	2/12/14	---

Date: 02/12/2014	Drawn by: NJS	Check by: GEH
Project #: 042403	Design by: GEH	Review by: HDN

STATE OF DELAWARE
DEPARTMENT OF NATURAL RESOURCES AND ENVIRONMENTAL CONTROL
DIVISION OF PARKS AND RECREATION & AUBURN VILLAGE LLC

NVF PROPERTIES
NVF YORKLYN SITE (DE-0071) YORKLYN, DELAWARE

EROSION AND SEDIMENT CONTROL PLAN

GUN CLUB ROAD
MAINTENANCE OF
TRAFFIC PLAN
PHASE 2

DRAWING NO.
T-104

NOTES:

1. LOCATION OF TEMPORARY SIGN ON THE DRAWING INDICATES THE SIDE OF THE ROAD THE SIGN WILL BE LOCATED ON. THE SIGN SHALL FACE ON-COMING TRAFFIC.
2. TEMPORARY TRAFFIC SIGNS SHALL BE INSTALLED AND REMAIN IN PLACE DURING THE ENTIRE CONSTRUCTION OF THE NEW GUN CLUB ROAD ENTRANCE.
3. ADJACENT PROPERTY OWNERS TO BE INFORMED OF TEMPORARY TRAFFIC CONTROLS.
4. 2-WAY TRAFFIC MUST BE RESTORED TO DELDOT STANDARDS AT THE END OF EACH WORK DAY.

BLACK & VEATCH
Federal Services Div.
200 BELLEVUE PARKWAY, SUITE 215
WILMINGTON, DELAWARE
PHONE: (302) 798-6300 FAX: (302) 798-0201
WEBSITE: WWW.BV.COM

Rev.	Description	Date	Apr.
1	Renewed E&S Permit	2/12/14	---
2	---	---	---
3	---	---	---
4	---	---	---
5	---	---	---
6	---	---	---
7	---	---	---
8	---	---	---

Date: 02/12/2014	Drawn by: KJS	Check by: GEH	
Project #: 042403	Design by: GEH	Review by: MJN	

STATE OF DELAWARE
DEPARTMENT OF NATURAL RESOURCES AND ENVIRONMENTAL CONTROL
DIVISION OF PARKS AND RECREATION & AUBURN VILLAGE LLC

NVF PROPERTIES
NVF YORKLYN SITE (DE-5071) YORKLYN, DELAWARE

EROSION AND SEDIMENT CONTROL PLAN

NORTHBOUND YORKLYN ROAD
MAINTENANCE OF TRAFFIC PLAN

DRAWING NO.
T-105

NOTES:

1. LOCATION OF TEMPORARY SIGN ON THE DRAWING INDICATES THE SIDE OF THE ROAD THE SIGN WILL BE LOCATED ON. THE SIGN SHALL FACE ON-COMING TRAFFIC.
2. TEMPORARY TRAFFIC SIGNS SHALL BE INSTALLED AND REMAIN IN PLACE DURING THE ENTIRE CONSTRUCTION OF THE NEW GUN CLUB ROAD ENTRANCE.
3. ADJACENT PROPERTY OWNERS TO BE INFORMED OF TEMPORARY TRAFFIC CONTROLS.
4. 2-WAY TRAFFIC MUST BE RESTORED TO DELDOT STANDARDS AT THE END OF EACH WORK DAY.

BLACK & VEATCH
Federal Services Div.
300 BELLEVUE PARKWAY, SUITE 215
WILMINGTON, DELAWARE
PHONE: (302) 798-0200 FAX: (302) 798-0201
WEBSITE: WWW.BV.COM

Rev.	Description	Date	Apr.
1	Renewed E&S Permit	2/12/14	
2			
3			
4			
5			
6			
7			
8			

Date: 02/12/2014 | Drawn by: NJS | Check by: GEH
Project #: 042403 | Design by: GEH | Review by: MJN

STATE OF DELAWARE
DEPARTMENT OF NATURAL RESOURCES AND ENVIRONMENTAL CONTROL
DIVISION OF PARKS AND RECREATION & AUBURN VILLAGE LLC

NVF PROPERTIES
NVF YORKLYN SITE (DE-0071) YORKLYN, DELAWARE

EROSION AND SEDIMENT CONTROL PLAN

SOUTHBOUND YORKLYN ROAD
MAINTENANCE OF TRAFFIC PLAN

DRAWING NO.
T-106

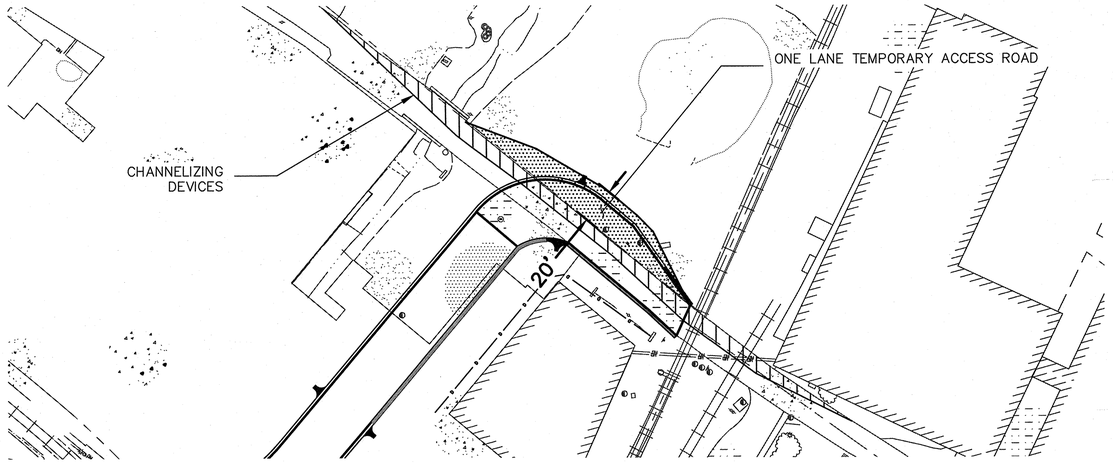

TEMPORARY ACCESS ROAD

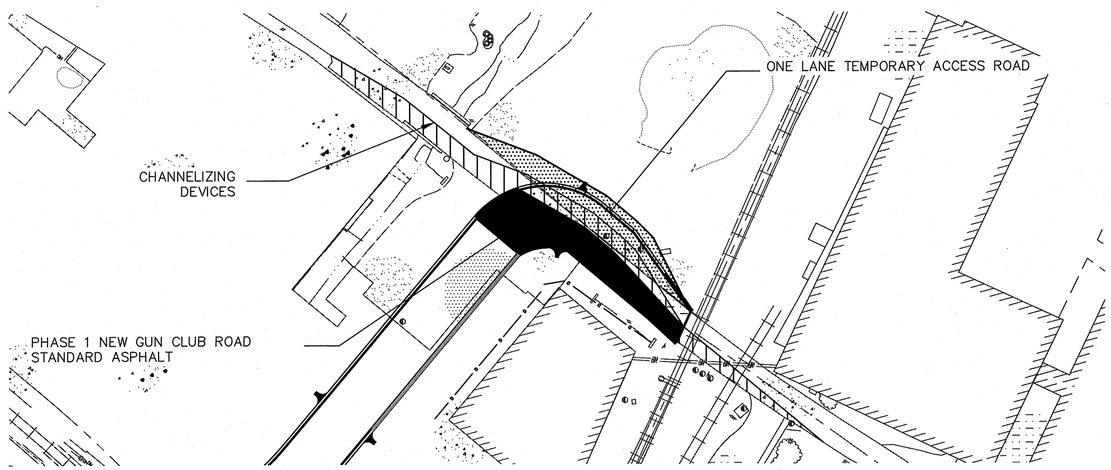

PHASE 1

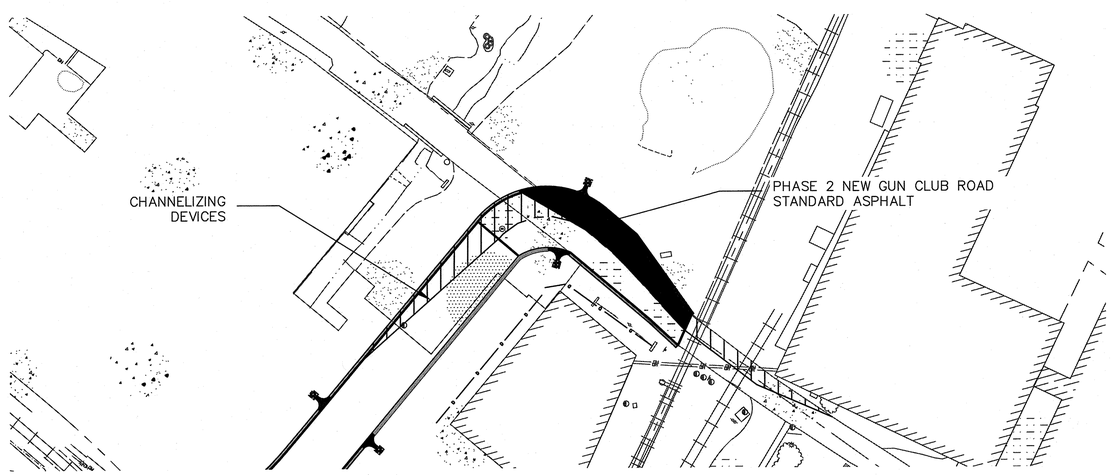

PHASE 2

NOTES:

1. LOCATION OF TEMPORARY SIGN ON THE DRAWING INDICATES THE SIDE OF THE ROAD THE SIGN WILL BE LOCATED ON. THE SIGN SHALL FACE ON-COMING TRAFFIC.
2. TEMPORARY TRAFFIC SIGNS SHALL BE INSTALLED AND REMAIN IN PLACE UNTIL NEW GUN CLUB ROAD IS OPERATIONAL.
3. 2-WAY TRAFFIC MUST BE RESTORED TO DELDOT STANDARDS AT THE END OF EACH WORK DAY.

SEQUENCE OF CONSTRUCTION FOR CONNECTION TO EXISTING GUN CLUB ROAD

TEMPORARY ACCESS ROAD

1. INSTALL TEMPORARY ACCESS ROAD MAINTENANCE OF TRAFFIC DEVICES AND SIGNAGE AS SHOWN ON FIGURE T-102.
2. EXCAVATE 8 INCHES IN TEMPORARY ACCESS ROAD AREA.
3. INSTALL SEPARATION GEOTEXTILE FABRIC (MIRAFI 600X OR APPROVED EQUIVALENT) AND 8 INCHES OF GRADED AGGREGATE FOR TEMPORARY ROADWAY MATERIAL (TRM). GRADED AGGREGATE FOR TRM SHALL CONFORM TO DELDOT SECTION 821 TYPE B (CRUSHER RUN).
4. REMOVE TEMPORARY ACCESS ROAD MAINTENANCE OF TRAFFIC DEVICES AND SIGNAGE.

PHASE 1

1. INSTALL PHASE 1 MAINTENANCE OF TRAFFIC AND CHANNELIZING DEVICES AND SIGNAGE AS SHOWN ON FIGURE T-103.
2. DEMOLISH PORTION OF EXISTING GUN CLUB ROAD AS SHOWN ON THIS SHEET.
3. INSTALL ROAD SUB-BASE FOR PHASE 1 NEW ASPHALT AREA.
4. INSTALL CURB AND GUTTER ALONG PHASE 1 NEW ASPHALT AREA.
5. INSTALL BASE COURSE FOR PHASE 1 NEW ASPHALT AREA.
6. REMOVE PHASE 1 MAINTENANCE OF TRAFFIC AND CHANNELIZING DEVICES.

PHASE 2

1. INSTALL PHASE 2 MAINTENANCE OF TRAFFIC AND CHANNELIZING DEVICES AND SIGNAGE AS SHOWN ON FIGURE T-104.
2. DEMOLISH PORTION OF EXISTING GUN CLUB ROAD AND TEMPORARY ACCESS ROAD AS SHOWN ON THIS SHEET.
3. INSTALL ROAD SUB-BASE FOR PHASE 2 NEW ASPHALT AREA.
4. INSTALL CURB AND GUTTER ALONG PHASE 2 NEW ASPHALT AREA.
5. INSTALL BASE COURSE FOR PHASE 2 NEW ASPHALT AREA.
6. REMOVE PHASE 2 MAINTENANCE OF TRAFFIC AND CHANNELZING DEVICES.

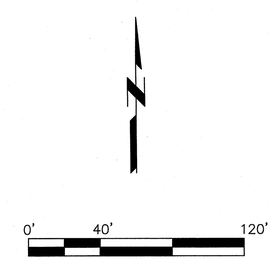

SCALE: 1" – 40'

BLACK & VEATCH
Federal Services Div.
200 BELLEVUE PARKWAY, SUITE 215
WILMINGTON, DELAWARE
PHONE: (302) 798-0200 FAX: (302) 798-0201
WEBSITE: WWW.BV.COM

Rev.	Description	Date	Apr
8	---	---	---
7	---	---	---
6	---	---	---
5	---	---	---
4	---	---	---
3	---	---	---
2	---	---	---
1	Renewed E&S Permit	2/12/14	---

Date: 02/12/2014 Drawn by: DBS Check by: GEH
Project #: 0424053 Design by: GEH Review by: KWN

STATE OF DELAWARE
DEPARTMENT OF NATURAL RESOURCES AND ENVIRONMENTAL CONTROL
DIVISION OF PARKS AND RECREATION & AUBURN VILLAGE LLC

NVF PROPERTIES
NVF YORKLYN SITE (DE-0071) YORKLYN, DELAWARE

EROSION AND SEDIMENT CONTROL PLAN

GUN CLUB ROAD
MAINTENANCE OF
TRAFFIC PLAN
SEQUENCE OF CONSTRUCTION

DRAWING NO.
T-107

Figure 6H-3. Work on the Shoulder of a Two-Lane Road (TA-3) (Delaware Revision)

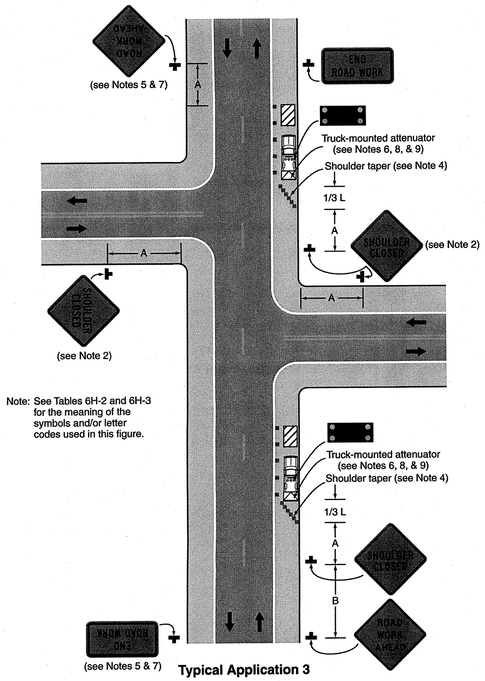

Typical Application 3

Notes for Figure 6H-3—Typical Application 3
Work on the Shoulder of a Two-Lane Road
(Delaware Revision)

Guidance:

1. A SHOULDER CLOSED sign should be placed on the left side of the roadway for a divided or one-way street only if the left shoulder is affected.

Option:

2. The SHOULDER CLOSED sign may be omitted from an intersecting roadway where drivers emerging from that roadway will encounter another advance warning sign prior to the activity area.

3. For short duration operations of 60 minutes or less, all signs and channelizing devices may be eliminated if a vehicle with activated high-intensity rotating, flashing, oscillating, or strobe lights is used.

Standard:

4. When paved shoulders having a width of 8 feet or more are closed, at least one advance warning sign shall be used. In addition, channelizing devices shall be used to close the shoulder in advance to delineate the beginning of the work space and direct vehicular traffic to remain within the traveled way.

5. If the shoulder closure is located within a passing zone, ROAD WORK AHEAD and END ROAD WORK signs shall be placed for traffic approaching in the opposite direction.

6. For long-term, intermediate-term, and short-term operations, a truck-mounted attenuator shall be used on roadways with a posted speed limit or 85th-percentile speed greater than 40 mph.

Option:

7. If the shoulder closure is located within a no-passing zone, ROAD WORK AHEAD and END ROAD WORK signs may be placed for traffic approaching in the opposite direction based on engineering judgment.

8. For short duration operations along roadways with a posted speed limit or 85th-percentile speed greater than 40 mph, a truck-mounted attenuator may be omitted if a vehicle with activated high-intensity rotating, flashing, oscillating, or strobe lights is used or if the shoulder width is less than the width of a truck-mounted attenuator.

9. Truck-mounted attenuators may be used for all operations along roadways with a posted speed limit or 85th-percentile speed less than or equal to 40 mph.

1 / T–108 TEMPORARY MAINTENANCE OF TRAFFIC: TYPICAL APPLICATION – 3
DELDOT MUTCD, CHAPTER 6H – TEMPORARY TRAFFIC CONTROL (2012)
NTS

Figure 6H-10. Lane Closure on a Two-Lane Road Using Flaggers (TA-10) (Delaware Revision)

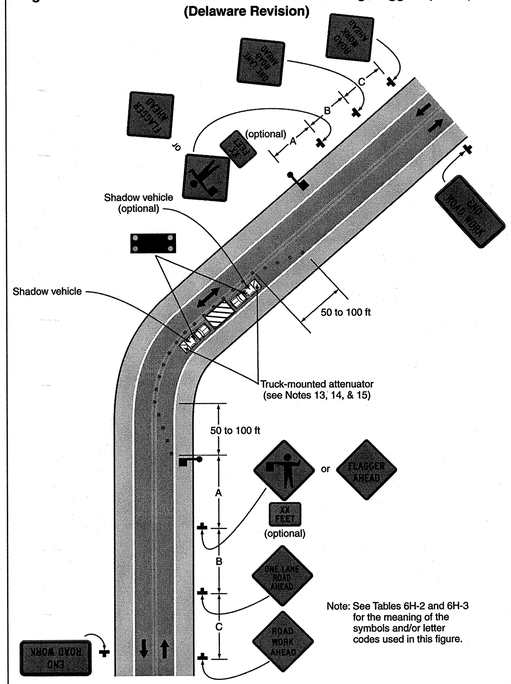

Typical Application 10

Notes for Figure 6H-10—Typical Application 10
Lane Closure on a Two-Lane Road Using Flaggers
(Delaware Revision)

Option:

1. For low-volume situations with short work zones on straight roadways where the flagger is visible to road users approaching from both directions, a single flagger, positioned to be visible to road users approaching from both directions, may be used (see Chapter 6E).

2. The ROAD WORK AHEAD and the END ROAD WORK signs may be omitted for short-duration operations.

3. A BE PREPARED TO STOP sign may be added to the sign series.

Guidance:

4. The buffer space should be extended so that the two-way traffic taper is placed before a horizontal (or crest vertical) curve to provide adequate sight distance for the flagger and a queue of stopped vehicles.

Standard:

5. At night, flagger stations shall be illuminated, except in emergencies.

Guidance:

6. When used, the BE PREPARED TO STOP sign should be located between the Flagger symbol (or FLAGGER AHEAD) sign and the ONE LANE ROAD sign.

7. Where drivers emerging from an intersecting roadway will not encounter an advance warning sign prior to the work zone, additional signs should be placed on the intersecting road.

8. When a grade crossing exists within or upstream of the transition area and it is anticipated that queues resulting from the lane closure might extend through the grade crossing, the TTC zone should be extended so that the transition area precedes the grade crossing (see Figure 6H-46).

9. When a grade crossing equipped with active warning devices exists within the activity area, provisions should be made for keeping flaggers informed as to the activation status of these warning devices (see Figure 6H-46).

10. When a grade crossing exists within the activity area, drivers operating on the left-hand side of the normal center line should be provided with comparable warning devices as for drivers operating on the right-hand side of the normal center line (see Figure 6H-46).

11. Early coordination with the railroad company or light rail transit agency should occur before work starts (see Figure 6H-46).

Option:

12. A flagger or a uniformed law enforcement officer may be used at the upstream side of the grade crossing to minimize the probability that vehicles are stopped within 50 feet of the grade crossing, measured from both sides of the outside rails (see Figure 6H-46).

Standard:

13. For long-term, intermediate-term, and short-term operations, a truck-mounted attenuator shall be used on roadways with a posted speed limit or 85th-percentile speed greater than 40 mph.

Option:

14. For short duration operations along roadways with a posted speed limit or 85th-percentile speed greater than 40 mph, a truck-mounted attenuator may be omitted if a vehicle with activated high-intensity rotating, flashing, oscillating, or strobe lights is used.

15. Truck-mounted attenuators may be used for all operations along roadways with a posted speed limit or 85th-percentile speed less than or equal to 40 mph.

3 / T–108 TEMPORARY MAINTENANCE OF TRAFFIC: TYPICAL APPLICATION – 10
DELDOT MUTCD, CHAPTER 6H – TEMPORARY TRAFFIC CONTROL (2012)
NTS

SHS	2-146	W20-4	SHS	2-150	W20-7a	SHS	—	W21-5-DE
DEMUTCD	6F-14		DEMUTCD	6F-20		DEMUTCD	6F-6	
ONE LANE ROAD XXX (AHEAD, 500 FT, 1000 FT, 1/2 MILE)			Flagger (Symbol)			SHOULDER CLOSED AHEAD		

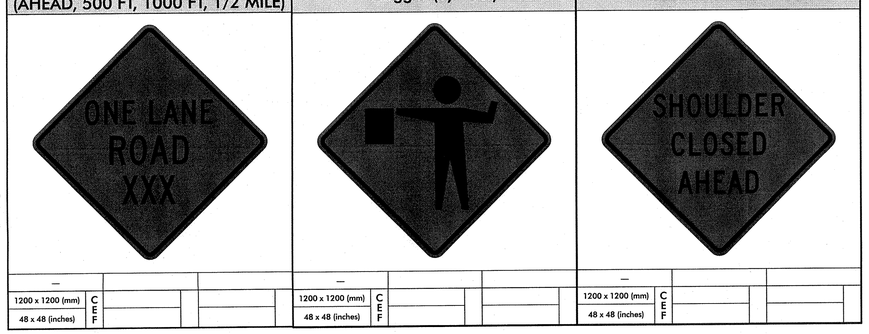

—				—				—			
1200 x 1200 (mm)	C			1200 x 1200 (mm)	C			1200 x 1200 (mm)	C		
48 x 48 (inches)	E F			48 x 48 (inches)	E F			48 x 48 (inches)	E F		

2 / T–108 TEMPORARY SIGNAGE
DELDOT MUTCD, CHAPTER 6F – TEMPORARY TRAFFIC CONTROL (2012)
NTS

Figure 6F-1. Height and Lateral Location of Signs—Typical Installations (Delaware Revision)

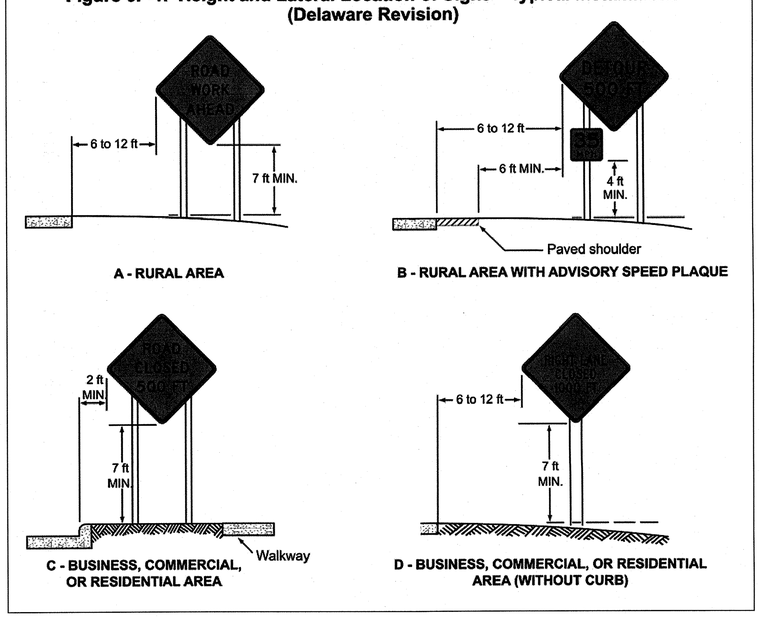

4 / T–108 TEMPORARY SIGN PLACEMENT
DELDOT MUTCD, CHAPTER 6F – TEMPORARY TRAFFIC CONTROL (2012)
NTS

BLACK & VEATCH
Federal Services Div.
200 BELLEVUE PARKWAY, SUITE 215
WILMINGTON, DELAWARE
PHONE: (302) 798-0200 FAX: (302) 798-0201
WEBSITE: WWW.BV.COM

Rev.	Description	Date	Apr.
8	---	---	---
7	---	---	---
6	---	---	---
5	---	---	---
4	---	---	---
3	---	---	---
2	---	---	---
1	Renewed E&S Permit	2/12/14	---

Date: 02/12/2014 | Drawn by: NJS | Check by: GEH
Project #: 042403 | Design by: GEH | Review by: MJN

STATE OF DELAWARE
DEPARTMENT OF NATURAL RESOURCES AND ENVIRONMENTAL CONTROL
DIVISION OF PARKS AND RECREATION & AUBURN VILLAGE LLC

NVF PROPERTIES
NVF YORKLYN SITE (DE-0071) YORKLYN, DELAWARE

EROSION AND SEDIMENT CONTROL PLAN

MAINTENANCE OF TRAFFIC DETAILS

DRAWING NO.
T-108