State of Delaware
Department of Natural Resources and Environmental Control
Delaware Division of Parks and Recreation
89 Kings Highway
Dover, Delaware 19901

ADDENDUM No. THREE

Project Name:	Campground Improvements Cape Henlopen State Park
Project No.:	CH-44
Contract No.:	2015-CH-300
Date of Issue:	July 20, 2015
Notice No. 1:	Attach this addendum to the Project Manual for this project. It modifies and becomes part of the Bidding Documents. Work or material not specifically mentioned herein is to be as described in the main body of the specification and as shown on the drawings.
Bids Due:	Tuesday, August 2, 2016 at 2:00 PM Auditorium DNREC, Division of Parks and Recreation 89 Kings Highway, Dover DE 19901

Drawings:

1 Refer to Specification Section 033000, Cast-in-Place Concrete: Paragraph 2.7 Vapor Retarders, Item 1d shall be revised to Viper Vaporcheck II as manufactured by Insulation Solutions.

Drawings:

1 Sheet C2.1 Site Demolition Plan: The 18” CMP, 15” CMP and masonry catch basin are to be removed at the northeast area of the Campground. This sheet has been revised and is included with this Addendum.

2 Sheet C3.6 RV Parking Plan:

A. Install new 15” RCP, 18” RCP and drainage inlet as shown in the northeast area of the Campground.
B. Install new 15” RCP and 12” RCP with flared ends as shown crossing Road C at the east end.
C. This sheet has been revised and is included with this Addendum.

3 Sheet C3.7 RV Parking Layout Plan: The Flared End Section Schedule, Pipe Schedule and Drainage Inlet Schedule have been revised. This sheet has been revised and is included with this Addendum

4 Sheet C8.6 Utilities Details: The locations of the yard hydrant and power center have been revised. This sheet has been revised and is included with this Addendum.

5 Sheet E1.1 Electrical Notes, Legends & Abbreviations:

A. The Oil-Filled, Pad-Mounted Medium-Voltage Transformer Schedule has been revised.
B. The Electrical Legend has been revised.
C. Electrical Abbreviations has been revised.
D. This sheet has been revised and is included with this Addendum.

6 Sheet E2.1 Electrical Demolition Plan: This sheet is revised, reissued and included with this Addendum.

7 Sheet E2.2 Electrical Site Plan: This sheet is revised, reissued and included with this Addendum.

8 Sheet E3.1 Electrical One Line Diagrams: This sheet is revised, reissued and included with this Addendum.

9 Sheet E4.1 Electrical Details:

A. Detail for separation distance between medium-voltage run and 600V or less run has been revised.
B. The Electrical Legend has been revised.
C. Electrical Abbreviations has been revised.
D. The Typical Power Post Detail has been revised.
E. This sheet has been revised and is included with this Addendum.

10 Sheet E4.2 Electrical Details: Detail Typical Transformer Loop-Feed Installation Detail has been revised at the secondary to meters. This sheet has been revised and is included with this Addendum.

11 Sheet E5.1 Electrical Schedules: This sheet has been reissued and is included with this Addendum.

12 Sheet E5.2 Electrical Schedules: This sheet has been reissued and is included with this Addendum.

Attachments
End Addendum Three

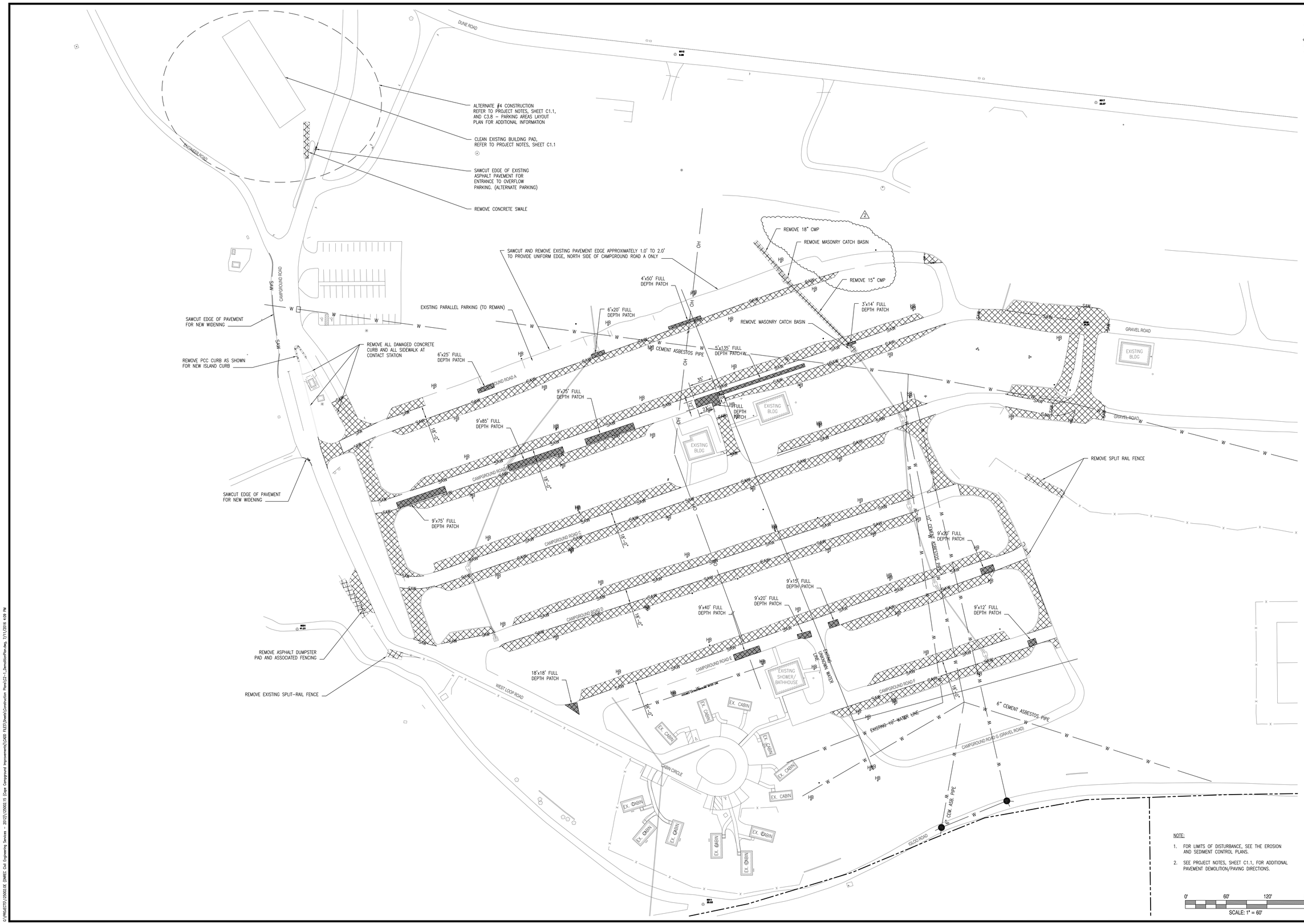

NOTE:

1. FOR LIMITS OF DISTURBANCE, SEE THE EROSION AND SEDIMENT CONTROL PLANS.
2. SEE PROJECT NOTES, SHEET C1.1, FOR ADDITIONAL PAVEMENT DEMOLITION/PAVING DIRECTIONS.

0' 60' 120' 180'
SCALE: 1" = 60'

REVISIONS:

DATE:	DESCRIPTION:	BY:
7/11/16	REV 2 – DEMO STORM PIPE AND CATCH BASINS	WJH

CAPE HENLOPEN STATE PARK CAMPGROUND IMPROVEMENTS

SITE DEMOLITION PLAN

SEAL:

CIVIL ENGINEER:

CENTURY ENGINEERING
CONSULTING ENGINEERS, SURVEYORS
4134 N. DUPONT HWY.
DOVER, DELAWARE 19901

CEI NO.: 125002.15

DELAWARE DEPARTMENT OF NATURAL RESOURCES AND ENVIRONMENTAL CONTROL

DESIGNED BY: WJH

DRAWN BY: DLD

CHECKED BY: SLR

DATE: JUNE 28, 2016

SCALE: 1" = 60'

SHEET NO.: C2.1

CONTRACT NO.:

G:\PROJECTS\125002.0E (DNREC Cell Engineering Services – 2012)\125002.15 (Cape Campground Improvements)\CADD FILES\Sheets\Construction Plans\C2-1_DemolitionPlan.dwg, 7/11/2016 4:09 PM

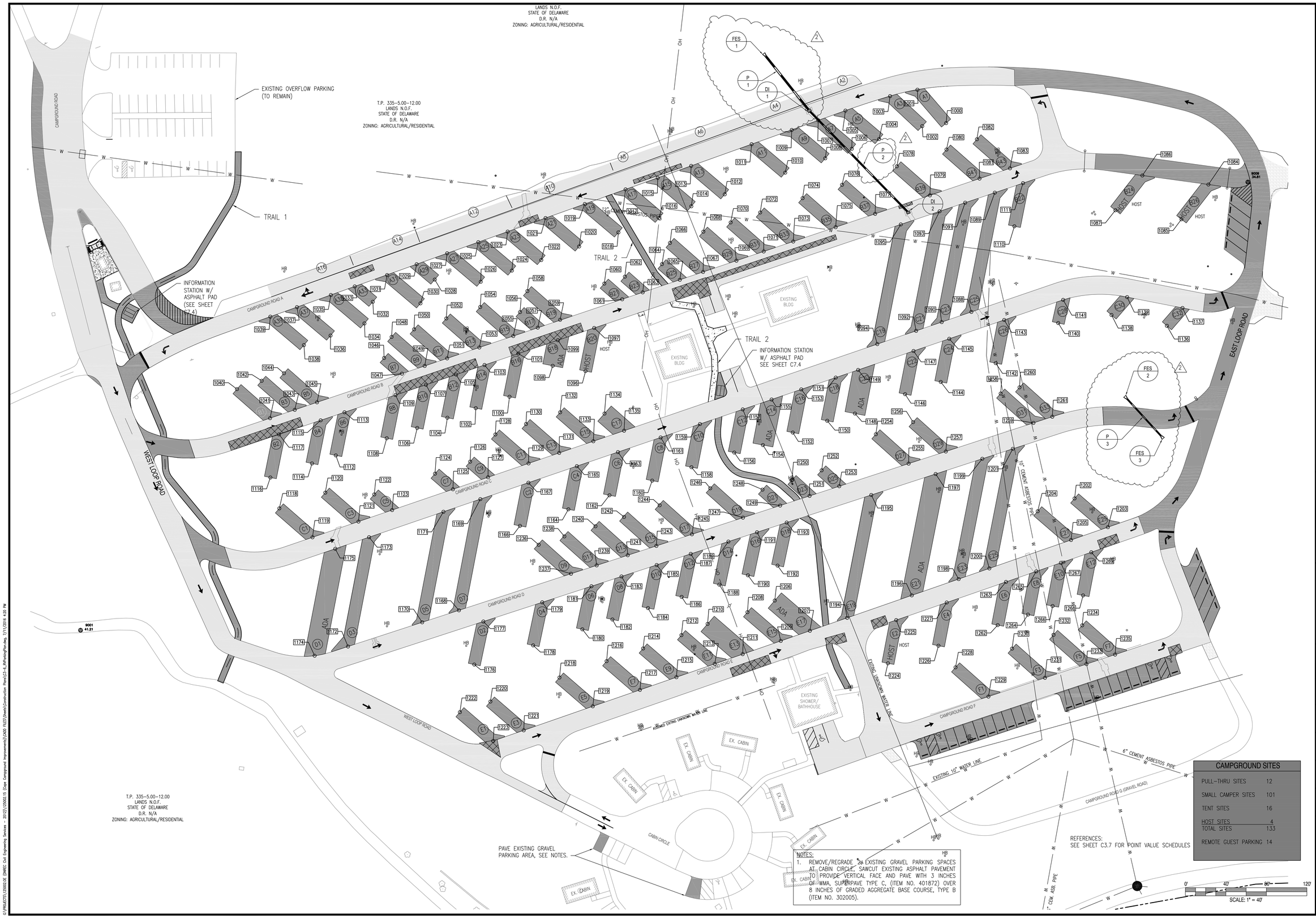

NOTES:
1. REMOVE/REGRADE AN EXISTING GRAVEL PARKING SPACES AT CABIN CIRCLE, SAWCUT EXISTING ASPHALT PAVEMENT TO PROVIDE VERTICAL FACE AND PAVE WITH 3 INCHES OF WMA, SUPERPAVE TYPE C, (ITEM NO. 401872) OVER 8 INCHES OF GRADED AGGREGATE BASE COURSE, TYPE B (ITEM NO. 302005).

CAMPGROUND SITES	
PULL-THRU SITES	12
SMALL CAMPER SITES	101
TENT SITES	16
HOST SITES	4
TOTAL SITES	133
REMOTE GUEST PARKING	14

REVISIONS:

DATE:	DESCRIPTION:	BY:
7/11/16	REV 2 – ADDED NEW PIPES, CATCH BASINS, AND FLARED END SECTIONS	WJH

CAPE HENLOPEN STATE PARK CAMPGROUND IMPROVEMENTS

RV PARKING PLAN

SEAL:

CIVIL ENGINEER:

CENTURY ENGINEERING
CONSULTING ENGINEERS, SURVEYORS
4134 N. DUPONT HWY.
DOVER, DELAWARE 19901

CEI NO.: 125002.15

DELAWARE DEPARTMENT OF NATURAL RESOURCES AND ENVIRONMENTAL CONTROL

DESIGNED BY: WJH

DRAWN BY: DLD

CHECKED BY: SLR

DATE: JUNE 28, 2016

SCALE: 1" = 40'

SHEET NO.: C3.6

CONTRACT NO.:

G:\PROJECTS\125002.00 (DNREC) Civil Engineering Services - 2012\125002.15 (Cape Campground Improvements)\CADD FILES\Sheets\Construction Plans\C3-6_RVParkingPlan.dwg, 7/11/2016 4:20 PM

RV PARKING LAYOUT		
POINT NO.	NORTHING	EASTING
1000	282949.2798	747474.0157
1001	282982.2552	747445.7005
1002	282946.2503	747450.4314
1003	282975.9230	747418.6720
1004	282933.5124	747407.7782
1005	282961.6090	747374.6108
1006	282923.9173	747380.8911
1007	282952.0168	747347.7317
1008	282914.5063	747354.6389
1009	282942.5224	747321.5758
1010	282900.3353	747315.1083
1011	282928.4348	747281.9489
1012	282878.9382	747255.4203
1013	282907.0377	747222.2609
1014	282867.0968	747222.3880
1015	282895.1962	747189.2286
1016	282855.7051	747190.6107
1017	282883.8046	747157.4513
1018	282841.2777	747150.3648
1019	282869.3772	747117.2053

RV PARKING LAYOUT		
POINT NO.	NORTHING	EASTING
1020	282827.3749	747111.5823
1021	282855.4743	747078.4229
1022	282813.9703	747074.1898
1023	282842.0698	747041.0304
1024	282803.5652	747045.1644
1025	282831.6478	747012.0212
1026	282792.5500	747014.4370
1027	282820.6486	746981.2752
1028	282794.6885	746969.0153
1029	282809.8428	746951.1321
1030	282771.2108	746954.9106
1031	282799.1377	746921.9424
1032	282772.7684	746907.8715
1033	282787.9244	746889.9898
1034	282751.3781	746899.5864
1035	282779.4776	746866.4270
1036	282739.3736	746866.0994
1037	282767.4731	746832.9400
1038	282729.9425	746839.7910
1039	282758.0420	746806.6316

RV PARKING LAYOUT		
POINT NO.	NORTHING	EASTING
1040	282686.4469	746773.7118
1041	282657.7409	746806.3475
1042	282694.6915	746798.1176
1043	282665.9855	746830.7534
1044	282702.1189	746820.1045
1045	282673.4129	746852.7402
1046	282717.2424	746918.9864
1047	282701.7439	746936.6066
1048	282738.0328	746926.4180
1049	282709.3268	746959.0537
1050	282745.5266	746948.6016
1051	282716.8206	746981.2374
1052	282756.2728	746980.4127
1053	282727.5668	747013.0485
1054	282767.5694	747013.9259
1055	282738.8811	747046.5415
1056	282762.5723	747053.2437
1057	282747.1770	747070.7476
1058	282783.3335	747060.5189
1059	282754.9422	747092.8006

RV PARKING LAYOUT		
POINT NO.	NORTHING	EASTING
1180	282449.1636	747114.7943
1181	282491.6894	747123.7769
1182	282458.8485	747144.4728
1183	282501.3743	747153.4554
1184	282470.1469	747179.6216
1185	282512.7067	747188.1827
1186	282481.1625	747212.8523
1187	282523.6883	747221.8349
1188	282493.2937	747250.0273
1189	282535.8194	747259.0100
1190	282502.5221	747278.3069
1191	282545.0478	747287.2896
1192	282512.0812	747307.6001
1193	282554.6069	747316.5827
1194	282460.4670	747376.2844
1195	282581.8689	747400.1247
1196	282482.6811	747440.1396
1197	282602.6122	747463.6910
1198	282498.7822	747486.4226
1199	282617.6472	747509.7647

RV PARKING LAYOUT		
POINT NO.	NORTHING	EASTING
1200	282509.3192	747516.7115
1201	282627.4866	747539.9166
1202	282578.4640	747600.9099
1203	282550.0533	747633.8030
1204	282565.7956	747564.4940
1205	282537.3848	747597.3871
1206	282477.5792	747304.8264
1207	282447.6590	747339.4673
1208	282466.0756	747277.8458
1209	282437.6648	747310.7389
1210	282454.5032	747238.4935
1211	282424.5829	747273.1344
1212	282443.3889	747212.6322
1213	282414.9782	747245.5254
1214	282430.2172	747174.7699
1215	282401.8065	747207.6630
1216	282417.6770	747138.7226
1217	282389.2663	747171.6158
1218	282401.4929	747092.2011
1219	282373.0822	747125.0942

RV PARKING LAYOUT		
POINT NO.	NORTHING	EASTING
1220	282377.7643	747023.9924
1221	282349.3536	747056.8855
1222	282367.2751	746993.8410
1223	282338.8644	747026.7341
1224	282415.5763	747416.5886
1225	282458.2680	747424.7464
1226	282432.9315	747466.4767
1227	282475.6232	747474.6345
1228	282411.5711	747483.3389
1229	282382.6829	747515.8135
1230	282430.0827	747539.1660
1231	282401.1945	747571.6406
1232	282443.6713	747580.1464
1233	282414.7831	747612.6210
1234	282453.0487	747608.4266
1235	282424.1607	747640.9019
1236	282532.6835	747071.6554
1237	282504.0272	747103.5629
1238	282540.9627	747097.0264
1239	282512.3064	747128.9339

RV PARKING LAYOUT		
POINT NO.	NORTHING	EASTING
1060	282790.7267	747136.4962
1061	282775.2230	747154.1222
1062	282797.5806	747156.8062
1063	282782.0772	747174.4120
1064	282809.9271	747193.4249
1065	282794.4457	747211.0257
1066	282830.9108	747201.3587
1067	282802.2048	747233.9945
1068	282842.0363	747234.2928
1069	282813.3303	747266.9286
1070	282851.1508	747261.2738
1071	282822.4448	747293.9096
1072	282860.9935	747290.4106
1073	282832.2875	747323.0463
1074	282875.1483	747332.3121
1075	282846.4423	747364.9479
1076	282888.3098	747371.2733
1077	282859.6038	747403.9091
1078	282906.5892	747425.3847
1079	282877.8832	747458.0205

RV PARKING LAYOUT		
POINT NO.	NORTHING	EASTING
1080	282923.1461	747474.3968
1081	282894.4401	747507.0326
1082	282933.3061	747504.4729
1083	282904.6001	747537.1086
1084	282888.6021	747733.0789
1085	282854.2569	747706.4418
1086	282897.5301	747667.8695
1087	282863.1849	747641.2324
1088	282762.7121	747498.9877
1089	282880.5395	747522.1261
1090	282752.6787	747469.6657
1091	282870.6433	747492.8310
1092	282744.0285	747444.3863
1093	282862.1115	747467.5748
1094	282730.9125	747406.0556
1095	282849.1748	747429.2793
1096	282704.2689	747117.9360
1097	282746.8853	747126.4783
1098	282709.5215	747085.5074
1099	282734.7925	747090.6808

RV PARKING LAYOUT		
POINT NO.	NORTHING	EASTING
1100	282678.9027	747042.8461
1101	282721.5579	747051.5031
1102	282667.6470	747009.5266
1103	282710.3022	747018.1836
1104	282658.1752	746981.4878
1105	282700.8303	746990.1448
1106	282648.1037	746951.6739
1107	282690.7589	746960.3309
1108	282637.9399	746921.5865
1109	282680.5950	746930.2435
1110	282847.3403	747541.4610
1111	282889.9567	747550.0033
1112	282620.9631	746871.3313
1113	282663.5795	746879.8736
1114	282613.0149	746847.8028
1115	282655.6313	746856.3451
1116	282599.1219	746806.6763
1117	282641.7383	746815.2185
1118	282568.6321	746815.5356
1119	282540.0541	746848.2835

RV PARKING LAYOUT		
POINT NO.	NORTHING	EASTING
1240	282550.9846	747127.7375
1241	282522.3283	747159.6450
1242	282560.1957	747155.9644
1243	282531.5394	747187.8720
1244	282571.6674	747191.1184
1245	282543.0111	747223.0259
1246	282588.4966	747241.0786
1247	282559.4546	747273.4157
1248	282587.1612	747292.6950
1249	282571.4252	747310.0986
1250	282596.6562	747321.7916
1251	282580.9351	747339.1787
1252	282606.2256	747351.1222
1253	282590.5045	747368.5093
1254	282641.8761	747404.6557
1255	282612.8340	747436.9928
1256	282653.8672	747441.4015
1257	282624.8251	747473.7386
1258	282682.0969	747527.9091
1259	282653.0548	747560.2462

RV PARKING LAYOUT		
POINT NO.	NORTHING	EASTING
1260	282688.1806	747546.5522
1261	282659.1385	747578.8893
1262	282453.2927	747525.0055
1263	282495.9844	747533.1634
1264	282463.6759	747554.8521
1265	282506.3675	747563.0100
1266	282472.1514	747579.2152
1267	282514.8430	747587.3730
1268	282482.6100	747609.2790
1269	282525.3017	747617.4369

RV PARKING LAYOUT		
POINT NO.	NORTHING	EASTING
1120	282584.1631	746860.9239
1121	282555.5851	746893.6719
1122	282582.3738	746909.2570
1123	282566.9614	746926.9183
1124	282602.9183	746969.2972
1125	282587.5059	746986.9585
1126	282614.7818	747003.9676
1127	282599.3694	747021.6289
1128	282641.6409	747028.8993
1129	282613.0629	747061.6472
1130	282651.9918	747059.1491
1131	282623.4138	747091.8970
1132	282663.5332	747092.8781
1133	282634.9552	747125.6260
1134	282662.2958	747136.6731
1135	282645.3381	747155.9694
1136	282748.9729	747692.0904
1137	282766.6467	747707.4812
1138	282759.6514	747637.3758
1139	282777.3650	747652.8013

RV PARKING LAYOUT		
POINT NO.	NORTHING	EASTING
1140	282751.7482	747584.7554
1141	282774.6299	747589.6007
1142	282712.1259	747523.0164
1143	282754.7755	747531.3917
1144	282693.5610	747468.7616
1145	282736.2105	747477.1369
1146	282681.4944	747433.4977
1147	282724.1439	747441.8730
1148	282662.3242	747384.0101
1149	282705.4150	747387.1389
1150	282655.1875	747356.6173
1151	282697.8370	747364.9926
1152	282643.5546	747322.6210
1153	282686.2041	747330.9963
1154	282631.2143	747293.0933
1155	282676.1743	747301.6846
1156	282623.7761	747264.8194
1157	282666.4256	747273.1947
1158	282609.3149	747222.5575
1159	282651.9644	747230.9328

RV PARKING LAYOUT		
POINT NO.	NORTHING	EASTING
1160	282596.0349	747183.7475
1161	282638.6844	747192.1229
1162	282581.5995	747141.5609
1163	282624.2490	747149.9362
1164	282567.7154	747100.9856
1165	282610.3650	747109.3609
1166	282551.3463	747053.1476
1167	282593.9958	747061.5230
1168	282467.9138	746992.8962
1169	282577.7539	747014.0571
1170	282456.0662	746956.5902
1171	282565.2764	746977.5925
1172	282432.1664	746883.3512
1173	282540.1475	746904.1546
1174	282423.0594	746850.3858
1175	282528.7142	746870.7416
1176	282414.3288	747008.0457
1177	282456.8546	747017.0283
1178	282433.2966	747066.1709
1179	282475.8223	747075.1536

2

FLARED END SECTION SCHEDULE			
ID	SIZE/TYPE	SLOPE	SAFETY GRATE
1	18" RCP	0.000	NO
2	12" RCP	0.0187	NO
3	12" RCP	0.0187	NO

PIPE SCHEDULE							
PIPE ID	SIZE	TYPE	LENGTH	SLOPE	INLET INVERT	OUTLET INVERT	CLASS
1	18"	RCP	64	--	21.25	7.28	IV
2	15"	RCP	138	--	27.71	21.33	IV
3	12"	RCP	56	0.0187	39.49	38.50	IV

DRAINAGE INLET SCHEDULE							
ID	SIZE	GRATE	T.O.G.	INVERT	STATION	OFFSET
1	34"x24"	--	23.78	21.25	34+56	--
2	34"x24"	--	30.07	21.33	28+06	--

REVISIONS:

DATE:	DESCRIPTION:	BY:
7/11/16	REV 2 – ADDED PIPE, CATCH BASIN, AND FLARED END SCHEDULES	WJH

CAPE HENLOPEN STATE PARK CAMPGROUND IMPROVEMENTS

RV PARKING LAYOUT PLAN

SEAL:

CIVIL ENGINEER:

CENTURY ENGINEERING
CONSULTING ENGINEERS, SURVEYORS
4134 N. DUPONT HWY.
DOVER, DELAWARE 19901

CEI NO.: 125002.15

DELAWARE DEPARTMENT OF NATURAL RESOURCES AND ENVIRONMENTAL CONTROL

DESIGNED BY: WJH

DRAWN BY: DLD

CHECKED BY: SLR

DATE: JUNE 28, 2016

SCALE: NOT TO SCALE

SHEET NO.: C3.7

CONTRACT NO.:

G:\PROJECTS\125002.DE (DNREC Civil Engineering Services – 2012)\125002.15 (Cape Campground Improvements)\CADD FILES\Sheets\Construction Plans\C3-4_RVParkingPlan.dwg, 7/11/2016 4:15 PM

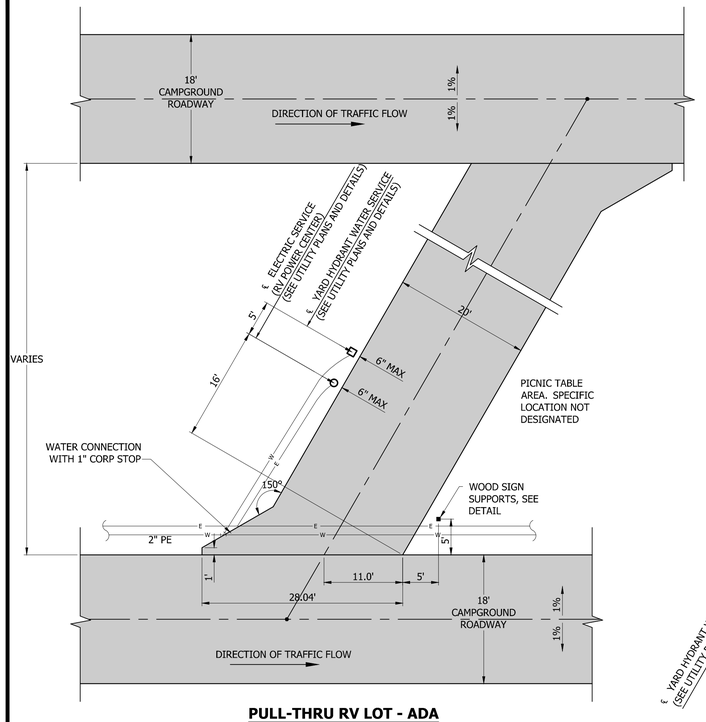

PULL-THRU RV LOT - ADA
NO SCALE

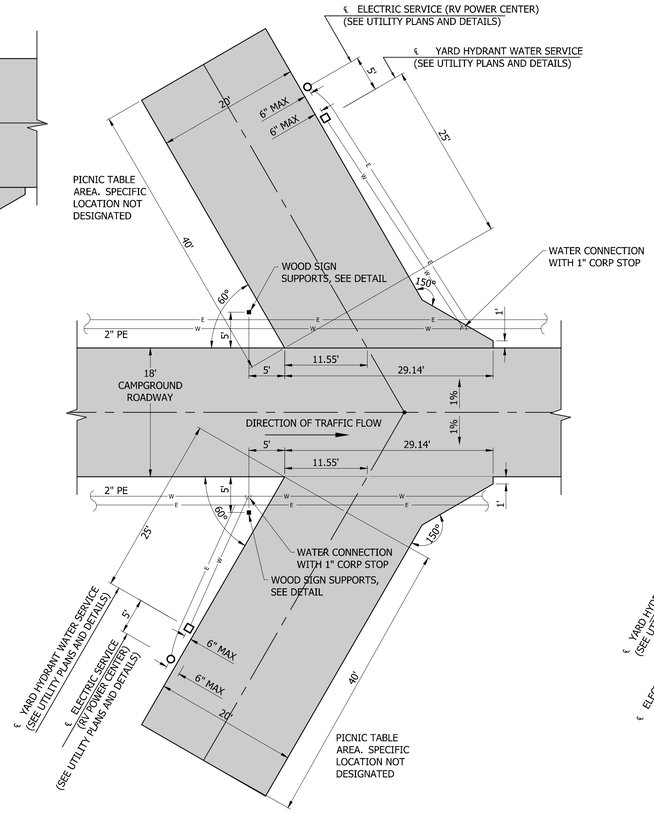

BACK-IN RV LOT - ADA
NO SCALE

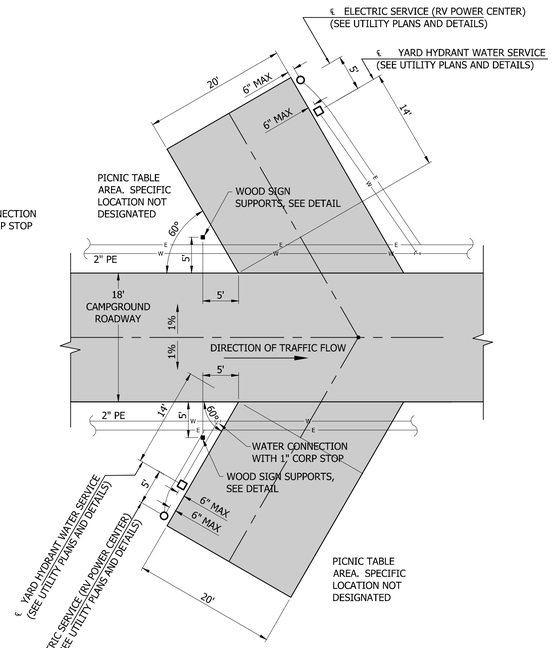

BACK-IN TENT SITE LOT - ADA
NO SCALE

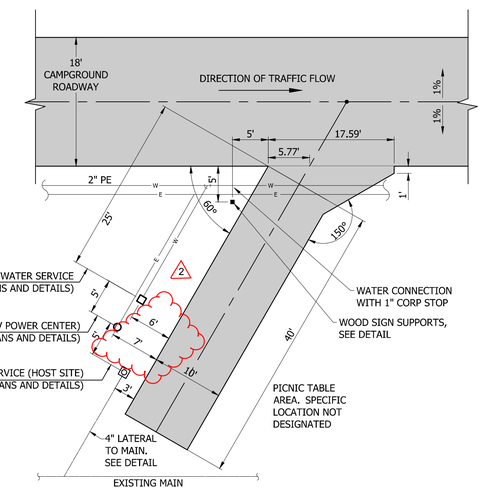

BACK-IN RV LOT - HOST SITE
NO SCALE

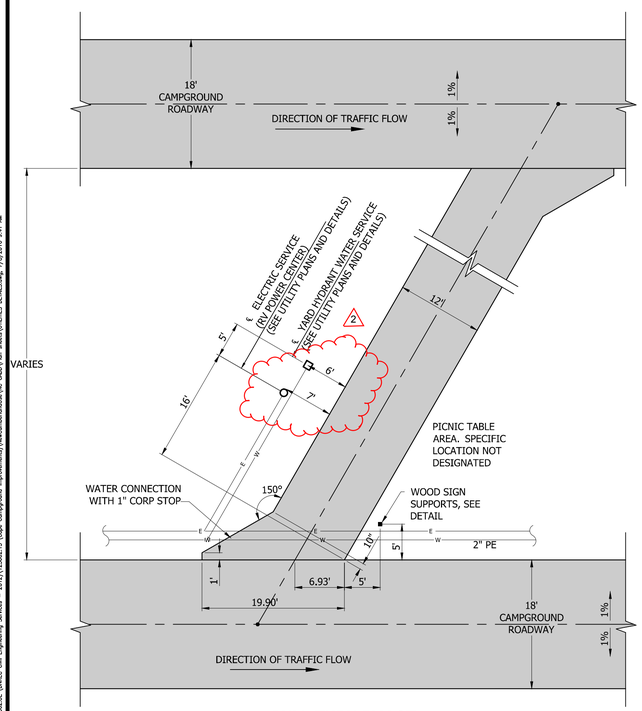

PULL-THRU RV LOT
NO SCALE

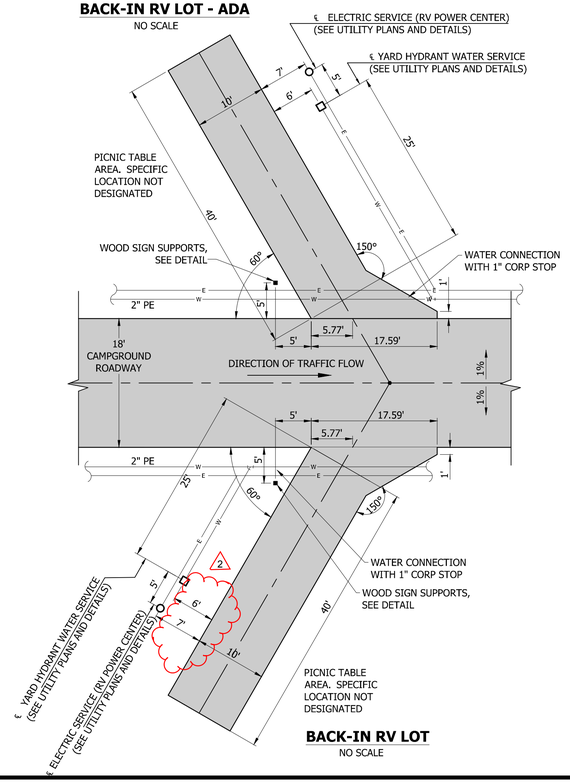

BACK-IN RV LOT
NO SCALE

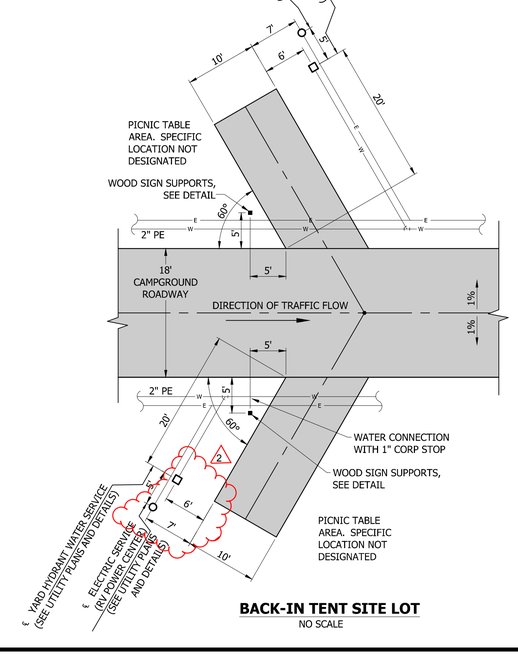

BACK-IN TENT SITE LOT
NO SCALE

NOTE:

1. THE CONTRACTOR SHALL PROVIDE AND INSTALL ONE (1) FIRE RING BASE AT EACH CAMPSITE FOR A TOTAL OF 200. THE FIRE RING BASE SHALL BE EITHER 36-INCHES IN DIAMETER OR 36-INCHES SQUARE BY 4-INCHES THICK CONCRETE AND CAN BE EITHER CAST-IN-PLACE OR PREFABRICATED. PREFABRICATED UNITS CAN BE PRECAST MANHOLE RISERS WITH THE INTERIOR VOID FILLED WITH CRUSHED STONE. CAST-IN-PLACE UNITS SHALL BE CONSTRUCTED USING 3000 PSI CONCRETE AND SHALL INCLUDE WELDED WIRE FABRIC 6X6-W1.4/W1.4, OR APPROVED EQUAL. THE BASE SHALL BE SET LEVEL ON GRADE AT LOCATIONS TO BE DETERMINED BY THE ENGINEER.

2. THE CONTRACTOR SHALL BE RESPONSIBLE FOR REMOVAL, STORING, AND REINSTALLING THE IRON FIRE RINGS AT EACH CAMPSITE. IRON FIRE RINGS MAY BE PLACED IN THE OVERFLOW PARKING LOT LOCATED ADJACENT TO THE CAMPGROUND CONTACT STATION. ADDITIONAL RINGS, IF NEEDED, SHALL BE PROVIDED BY DNREC STATE PARKS.

REVISIONS:

DATE:	DESCRIPTION:	BY:
7/11/16	2 UTILITY PEDESTAL OFFSET DIMENSION	WJH

CAPE HENLOPEN STATE PARK
CAMPGROUND IMPROVEMENTS

UTILITIES DETAILS

SEAL:

CIVIL ENGINEER:

CENTURY ENGINEERING
CONSULTING ENGINEERS, SURVEYORS
4134 N. DUPONT HWY.
DOVER, DELAWARE 19901

CEI NO.: 125002.15

DELAWARE DEPARTMENT OF NATURAL RESOURCES AND ENVIRONMENTAL CONTROL

DESIGNED BY: PWB
DRAWN BY: NHN
CHECKED BY: PWB
DATE: JUNE 28, 2016
SCALE: N/A
SHEET NO.: C8.6
CONTRACT NO.:

G:\PROJECTS\125002.0E (DNREC Cell Engineering Services – 2012)\125002.15 (Cape Campground Improvements)\NewCumberland\Dwg\UTILITIES DETAILS.dwg, 7/8/2016 8:41 AM

ELECTRICAL LEGEND

Symbol	Description
T	SERVICE TRANSFORMER
Ø	ELECTRIC UTILITY POLE
	ELECTRIC UTILITY METER
	RV POWER CENTER
—OH—	OVERHEAD ELECTRIC
—E—	UNDERGROUND ELECTRIC
—PE—	UNDERGROUND PRIMARY ELECTRIC (MEDIUM–VOLTAGE)

2

ELECTRICAL ABBREVIATIONS (NOT ALL USED)

A	AMPERE(S)	NTS	NOT TO SCALE
AFF	ABOVE FINISHED FLOOR	OH	OVERHEAD
AIC	AMPERES INTERRUPTING CAPACITY	ø	PHASE
AL	ALUMINUM	P	POLE
AWG	AMERICAN WIRE GAUGE	PNL	PANELBOARD
BPW	LEWES BOARD OF PUBLIC WORKS	PRI	PRIMARY
C	CONDUIT	PVC	POLYVINYL CHLORIDE
CB	CIRCUIT BREAKER	R	RECESSED
CKT	CIRCUIT	RL	RELOCATE EXISTING
CU	COPPER	RLA	RUNNING LOAD AMPERES
DWG	DRAWING	RMS	ROOT MEAN SQUARE
EX	EXISTING	S	SURFACE
FLA	FULL LOAD AMPERES	SEC	SECONDARY
G	GROUND	S/N	SOLID NEUTRAL
HH	HANDHOLE	TYP	TYPICAL
HP	HORSEPOWER	UE	UNDERGROUND ELECTRIC
HV	HIGH VOLTAGE	UG	UNDERGROUND
HZ	HERTZ	UNO	UNLESS NOTED OTHERWISE
Isc	SHORT CIRCUIT INTERRUPTING CAPACITY (RMS SYMMETRICAL AMPERES)	V	VOLTS
JB	JUNCTION BOX	VA	VOLT–AMPERE
Kcmil	THOUSAND CIRCULAR MILLS	W	WIRE, WATTS
KV	KILOVOLTS	WP	WEATHERPROOF
KVA	KILO–VOLT–AMPERES	Y	WYE CONNECTED
KW	KILOWATTS	XFMR	TRANSFORMER
LV	LOW VOLTAGE	XP	EXPLOSION–PROOF
MCB	MAIN CIRCUIT BREAKER	1P	SINGLE POLE
MISC	MISCELLANEOUS	2P	DOUBLE POLE
MLO	MAIN LUGS ONLY	3P	THREE POLE
NEC	NATIONAL ELECTRICAL CODE	4P	FOUR POLE

2

GENERAL NOTES – ELECTRICAL WORK

1. THE ELECTRICAL CONTRACTOR SHALL COORDINATE HIS WORK WITH THAT OF ALL OTHER TRADES. ALL OTHER TRADE'S DRAWINGS AND SPECIFICATIONS SHALL BE CONSULTED AND COORDINATED WITH PRIOR TO ROUGH–IN.
2. WHEREVER POSSIBLE, THE CONTRACTOR SHALL OBTAIN ACTUAL ROUGH–IN DRAWINGS FOR THE ACTUAL ITEM OF EQUIPMENT TO BE INSTALLED PRIOR TO ROUGH–IN. THIS SHALL APPLY TO ALL EQUIPMENT, WHETHER IT IS TO BE INSTALLED BY THE CONTRACTOR OR BY THE OWNER.
3. PROVIDE TYPED CIRCUIT DIRECTORIES FOR ALL PANELBOARDS TO INDICATE TYPE OF LOAD SERVED AND AREA SERVED (E.G. RV POWER POST A1).
4. UNLESS NOTED OTHERWISE, EVERY CONDUIT CONTAINING 120V OR GREATER WIRING SHALL CONTAIN A SEPARATE INSULATED GROUND WIRE RATED FOR 600V.
5. PROVIDE SEPARATE UNSHARED NEUTRAL CONDUCTOR(S) FOR ALL FEEDERS REQUIRING A NEUTRAL (I.E. 1 PHASE – 3 WIRE). SHARING OF NEUTRAL CONDUCTORS BETWEEN ANY CIRCUIT (FEEDER) IS NOT PERMITTED. MULTIWIRE FEEDER CIRCUITS ARE NOT PERMITTED.
6. CENTER EQUIPMENT OR DEVICES LOCATED ABOVE OPENINGS SUCH AS DOORS, LOUVER, ETC. ABOVE THE OPENING. THIS NOTE REFERS TO, BUT IS NOT LIMITED TO, CLOCKS, EXITS LIGHTS, EXTERIOR LIGHT FIXTURES, ETC.
7. CONFIRM ALL EQUIPMENT LOCATIONS PRIOR TO INSTALLATION.
8. PROVIDE WARNING LABELS FOR ALL PANELBOARDS AND METER SOCKET ENCLOSURES. WARNING LABELS SHALL READ AS FOLLOWS: "CAUTION. POTENTIAL ELECTRIC ARC FLASH HAZARD. WEAR PROPER PROTECTIVE CLOTHING WHILE EXAMINING, ADJUSTING, SERVICING OR MAINTAINING ENERGIZED EQUIPMENT." INSTALL WARNING LABELS ON EXTERIOR FRONT FACE OF ALL PANELBOARDS AND METER SOCKET ENCLOSURES LOCATED IN UNFINISHED/UTILITY TYPE SPACES. INSTALL WARNING LABELS ON INTERIOR FRONT FACE OF ALL PANELBOARDS LOCATED IN FINISHED SPACES. ENTIRE INSTALLATION SHALL COMPLY WITH THE REQUIREMENTS OF THE 2011 NEC, ARTICLE 110.16 (FLASH PROJECTION).
9. PROVIDE PANELBOARD WITH THE NUMBER OF POLES INDICATED. EACH SPACE SHALL BE A FULLY PREPARED SPACE (I.E. COMPLETE WITH ALL PROVISIONS INCLUDING ALL HARDWARE REQUIRED TO MOUNT A FUTURE CIRCUIT BREAKER INCLUDING BUS CONNECTIONS, CIRCUIT BREAKER MOUNTING BRACKET, CIRCUIT BREAKER COVER AND COVER KNOCKOUTS, ETC.). PANELBOARDS SHALL BE NEMA 3R, LOCKABLE WITH THE SAME KEYING.
10. COORDINATE UNDERGROUND RUNS WITH EXISTING CONDITION AND TREE LOCATIONS.
11. VERIFY ELECTRICAL SYSTEM PHASING AND ROTATION WITH UTILITY COMPANY.
12. COMPLY WITH LEWES BOARD OF PUBLIC WORKS' ELECTRIC UTILITY SPECIFICATION FOR DEVELOPER DOCUMENT. COORDINATE PRIMARY, TRANSFORMER, SECONDARY, AND METERING WORKS WITH LEWES BOARD OF PUBLIC WORKS.
13. COMPLY WITH CURRENT NATIONAL, STATE, AND LOCAL ADOPTED CODES.
14. ALL DISTURBED AREAS SHALL BE RESTORED TO THE ORIGINAL CONDITIONS.
15. SAW CUT PAVED AREAS IN ACCORDANCE WITH CONSTRUCTION DETAILS.
16. RESTORE DISTURBED PAVED AREAS IN ACCORDANCE WITH CONSTRUCTION DETAILS.
17. CONTRACTOR SHALL BE RESPONSIBLE FOR PROVIDING TEMPORARY POWER (PORTABLE GENERATORS, TEMPORARY SERVICES, ETC.).
18. ALL CONDUITS SHALL BE SCHEDULE 80 PVC, UNLESS NOTED OTHERWISE.
19. UNLESS OTHERWISE INDICATED, ALL CABLES/CONDUCTORS SHALL BE COPPER TYPE. ALUMINUM CABLES/CONDUCTORS SHALL ONLY BE ALLOW FOR USE FOR PRIMARY AND SECONDARY RUNS IN ACCORDANCE WITH LEWES BOARD OF PUBLIC WORKS' REQUIREMENTS.
20. UTILITY SERVICE POLE, FUSE CUTOUTS, OVERHEAD LINES UPSTREAM OF UTILITY SERVICE POLE, AND METERS TO BE PROVIDED BY LEWES BOARD OF PUBLIC WORKS' ELECTRIC DEPARTMENT.
21. FURNISH AND INSTALL TREATED LUMBER BOARDS ON BACK OF EXISTING METER STANDS TO ALLOW FOR INSTALLATION OF NEW PANELBOARDS. RUN SERVICE ENTRANCE WIRING AND CONDUITS AS INDICATED FROM EXISTING METERS TO NEW PANELBOARDS. COORDINATE WITH LEWES BOARD OF PUBLIC WORKS FOR INSTALLATION OF NEW METERS.

2

OIL–FILLED, PAD–MOUNTED MEDIUM–VOLTAGE TRANSFORMER SCHEDULE

ID	RATING			OIL TYPE	PRIMARY CIRCUIT	SECONDARY CIRCUIT	SERVES	PAD TYPE	REMARKS
	KVA	PRIMARY VOLTS, PH	SECONDARY VOLTS, PH						
T1	167	7200V SINGLE–PHASE LOOP FEED	120/240V, SINGLE–PHASE THREADED STUD PADMOUNT ADAPTER CONNECTORS	COOPER ENVIRONTEMP FR–3 FLUID	#1/0 SOLID ALUMINUM WITH CONCENTRIC COPPER WIRES DIRECT BURIED	6 SETS OF 3 #4/0 ALUMINUM DIRECT BURIED CABLES WITH 3–1/2"C RISERS	PANELS A1, A2 AND A3	NORDIC FIBERGLASS BOX PAD	COMPLY WITH LEWES BOARD OF PUBLIC WORKS' ELECTRIC UTILITY SPECIFICATION FOR DEVELOPERS, SECTION 700
T2	167	7200V SINGLE–PHASE LOOP FEED	120/240V, SINGLE–PHASE THREADED STUD PADMOUNT ADAPTER CONNECTORS	COOPER ENVIRONTEMP FR–3 FLUID	#1/0 SOLID ALUMINUM WITH CONCENTRIC COPPER WIRES DIRECT BURIED	6 SETS OF 3 #4/0 ALUMINUM DIRECT BURIED CABLES WITH 3–1/2"C RISERS	PANELS B1 AND B2	NORDIC FIBERGLASS BOX PAD	COMPLY WITH LEWES BOARD OF PUBLIC WORKS' ELECTRIC UTILITY SPECIFICATION FOR DEVELOPERS, SECTION 700
T3	167	7200V SINGLE–PHASE LOOP FEED	120/240V, SINGLE–PHASE THREADED STUD PADMOUNT ADAPTER CONNECTORS	COOPER ENVIRONTEMP FR–3 FLUID	#1/0 SOLID ALUMINUM WITH CONCENTRIC COPPER WIRES DIRECT BURIED	6 SETS OF 3 #4/0 ALUMINUM DIRECT BURIED CABLES WITH 3–1/2"C RISERS	PANELS B3 AND B4	NORDIC FIBERGLASS BOX PAD	COMPLY WITH LEWES BOARD OF PUBLIC WORKS' ELECTRIC UTILITY SPECIFICATION FOR DEVELOPERS, SECTION 700
T4	167	7200V SINGLE–PHASE LOOP FEED	120/240V, SINGLE–PHASE THREADED STUD PADMOUNT ADAPTER CONNECTORS	COOPER ENVIRONTEMP FR–3 FLUID	#1/0 SOLID ALUMINUM WITH CONCENTRIC COPPER WIRES DIRECT BURIED	6 SETS OF 3 #4/0 ALUMINUM DIRECT BURIED CABLES WITH 3–1/2"C RISERS	PANELS C1 AND C2	NORDIC FIBERGLASS BOX PAD	COMPLY WITH LEWES BOARD OF PUBLIC WORKS' ELECTRIC UTILITY SPECIFICATION FOR DEVELOPERS, SECTION 700
T5	167	7200V SINGLE–PHASE LOOP FEED	120/240V, SINGLE–PHASE THREADED STUD PADMOUNT ADAPTER CONNECTORS	COOPER ENVIRONTEMP FR–3 FLUID	#1/0 SOLID ALUMINUM WITH CONCENTRIC COPPER WIRES DIRECT BURIED	6 SETS OF 3 #4/0 ALUMINUM DIRECT BURIED CABLES WITH 3–1/2"C RISERS	PANELS D1, D2 AND D3	NORDIC FIBERGLASS BOX PAD	COMPLY WITH LEWES BOARD OF PUBLIC WORKS' ELECTRIC UTILITY SPECIFICATION FOR DEVELOPERS, SECTION 700
T6	167	7200V SINGLE–PHASE LOOP FEED	120/240V, SINGLE–PHASE THREADED STUD PADMOUNT ADAPTER CONNECTORS	COOPER ENVIRONTEMP FR–3 FLUID	#1/0 SOLID ALUMINUM WITH CONCENTRIC COPPER WIRES DIRECT BURIED	6 SETS OF 3 #4/0 ALUMINUM DIRECT BURIED CABLES WITH 3–1/2"C RISERS	PANELS E1, E2 AND E3	NORDIC FIBERGLASS BOX PAD	COMPLY WITH LEWES BOARD OF PUBLIC WORKS' ELECTRIC UTILITY SPECIFICATION FOR DEVELOPERS, SECTION 700
T7	100	7200V SINGLE–PHASE LOOP FEED	120/240V, SINGLE–PHASE THREADED STUD PADMOUNT ADAPTER CONNECTORS	COOPER ENVIRONTEMP FR–3 FLUID	#1/0 SOLID ALUMINUM WITH CONCENTRIC COPPER WIRES DIRECT BURIED	PROVIDE PADMOUNT ADDAPTER CONNECTORS. REUSE EXISTING CABIN'S SERVICE WIRES. PROVIDE 3#3/0 IN 2" CONDUIT FOR BATH HOUSE. PROVIDE ADDITIONAL CONDUITS TO EXTEND TO NEW TRANSFORMER.	EXISTING BATH HOUSE AND CABINS	NORDIC FIBERGLASS BOX PAD	COMPLY WITH LEWES BOARD OF PUBLIC WORKS' ELECTRIC UTILITY SPECIFICATION FOR DEVELOPERS, SECTION 700
T8	167	7200V SINGLE–PHASE LOOP FEED	120/240V, SINGLE–PHASE THREADED STUD PADMOUNT ADAPTER CONNECTORS	COOPER ENVIRONTEMP FR–3 FLUID	#1/0 SOLID ALUMINUM WITH CONCENTRIC COPPER WIRES DIRECT BURIED	6 SETS OF 3 #4/0 ALUMINUM DIRECT BURIED CABLES WITH 3–1/2"C RISERS	PANELS F1 AND F2	NORDIC FIBERGLASS BOX PAD	COMPLY WITH LEWES BOARD OF PUBLIC WORKS' ELECTRIC UTILITY SPECIFICATION FOR DEVELOPERS, SECTION 700
T9	167	7200V SINGLE–PHASE LOOP FEED	120/240V, SINGLE–PHASE THREADED STUD PADMOUNT ADAPTER CONNECTORS	COOPER ENVIRONTEMP FR–3 FLUID	#1/0 SOLID ALUMINUM WITH CONCENTRIC COPPER WIRES DIRECT BURIED	6 SETS OF 3 #4/0 ALUMINUM DIRECT BURIED CABLES WITH 3–1/2"C RISERS	PANELS B4 AND C4	NORDIC FIBERGLASS BOX PAD	COMPLY WITH LEWES BOARD OF PUBLIC WORKS' ELECTRIC UTILITY SPECIFICATION FOR DEVELOPERS, SECTION 700

G:\PROJECTS\125002.0E (DNREC Civil Engineering Services – 2012)\125002.15 (Cape Campground Improvements)\NewCumberlandUse\NC CADD\Plan sheets\E1.1 ELECTRICAL NOTES LEGEND & ABBREVIATIONS.dwg, 7/8/2016 3:23 PM

REVISIONS:

DATE:	DESCRIPTION:	BY:
7/11/16	REV 2 REVISED SCHEDULE & NOTES	WJH

CAPE HENLOPEN STATE PARK CAMPGROUND IMPROVEMENTS

ELECTRICAL NOTES LEGEND & ABBREVIATIONS

SEAL:

CIVIL ENGINEER:
CENTURY ENGINEERING
CONSULTING ENGINEERS, SURVEYORS
4134 N. DUPONT HWY.
DOVER, DELAWARE 19901

CEI NO.: 125002.15

DELAWARE DEPARTMENT OF NATURAL RESOURCES AND ENVIRONMENTAL CONTROL

DESIGNED BY: SDT

DRAWN BY: SDT

CHECKED BY: SGH

DATE: JUNE 28, 2016

SCALE: N/A

SHEET NO.: E1.1

CONTRACT NO.:

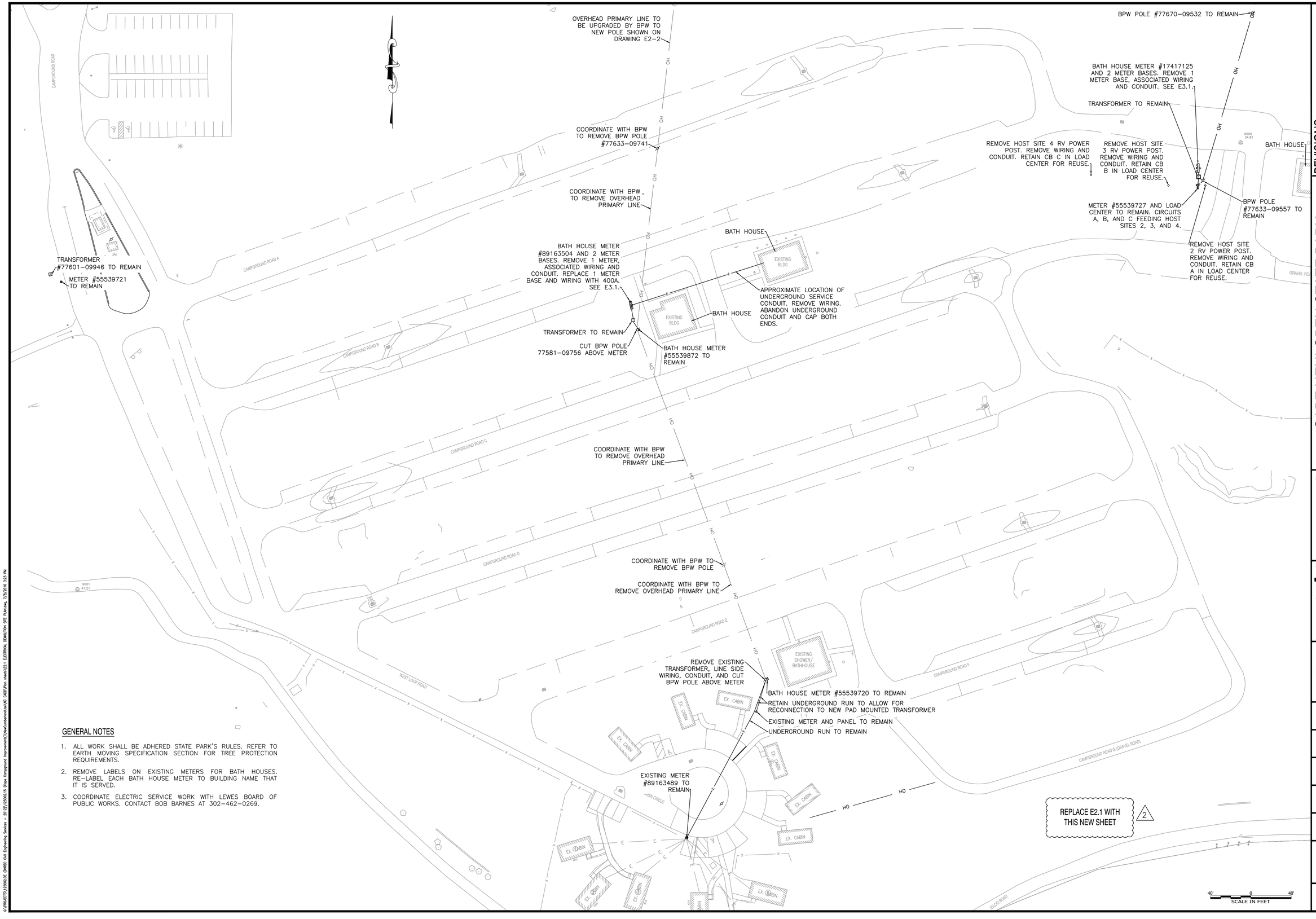

GENERAL NOTES

1. ALL WORK SHALL BE ADHERED STATE PARK'S RULES. REFER TO EARTH MOVING SPECIFICATION SECTION FOR TREE PROTECTION REQUIREMENTS.
2. REMOVE LABELS ON EXISTING METERS FOR BATH HOUSES. RE-LABEL EACH BATH HOUSE METER TO BUILDING NAME THAT IT IS SERVED.
3. COORDINATE ELECTRIC SERVICE WORK WITH LEWES BOARD OF PUBLIC WORKS. CONTACT BOB BARNES AT 302-462-0269.

REVISIONS:

DATE:	DESCRIPTION:	BY:
7/11/16	REV. 2 - NEW SHEET E2.1	WJH

CAPE HENLOPEN STATE PARK
CAMPGROUND IMPROVEMENTS

ELECTRICAL DEMOLITION SITE PLAN

SEAL:

CIVIL ENGINEER:

CENTURY ENGINEERING
CONSULTING ENGINEERS, SURVEYORS
4134 N. DUPONT HWY.
DOVER, DELAWARE 19901

CEI NO.: 125002.15

DELAWARE DEPARTMENT OF NATURAL RESOURCES AND ENVIRONMENTAL CONTROL

DESIGNED BY: SDT

DRAWN BY: SDT

CHECKED BY: SGH

DATE: JUNE 28, 2016

SCALE: 1"=40'

SHEET NO.: E2.1

CONTRACT NO.:

O:\PROJECTS\125002.00 (DNREC Cull Engineering Services - 2012)\125002.15 (Cape Campground Improvements)\NewCumberland\MC CADD\Plan sheets\E2.1 ELECTRICAL DEMOLITION SITE PLAN.dwg, 7/8/2016 3:23 PM

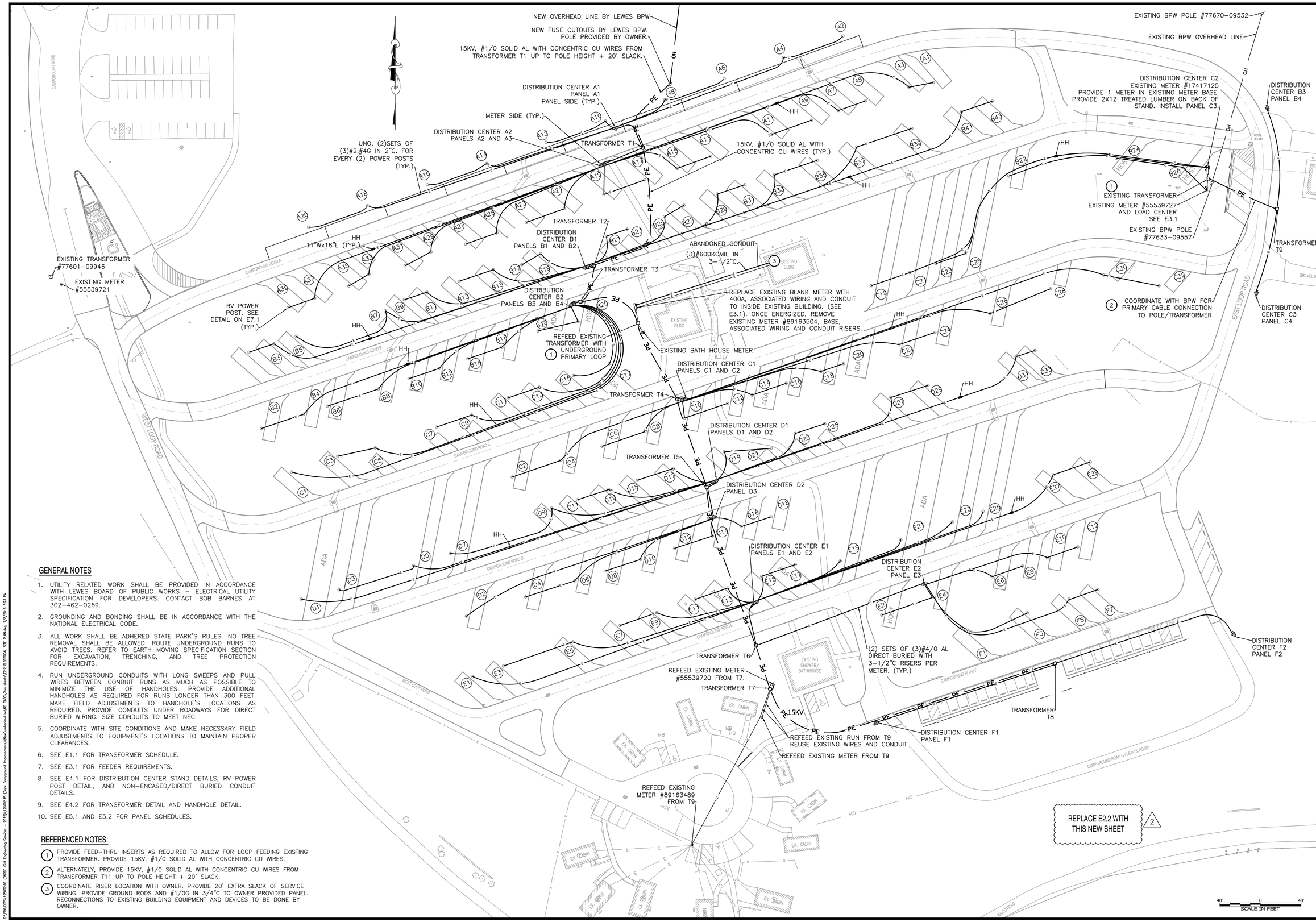

GENERAL NOTES

1. UTILITY RELATED WORK SHALL BE PROVIDED IN ACCORDANCE WITH LEWES BOARD OF PUBLIC WORKS – ELECTRICAL UTILITY SPECIFICATION FOR DEVELOPERS. CONTACT BOB BARNES AT 302-462-0269.
2. GROUNDING AND BONDING SHALL BE IN ACCORDANCE WITH THE NATIONAL ELECTRICAL CODE.
3. ALL WORK SHALL BE ADHERED STATE PARK'S RULES. NO TREE REMOVAL SHALL BE ALLOWED. ROUTE UNDERGROUND RUNS TO AVOID TREES. REFER TO EARTH MOVING SPECIFICATION SECTION FOR EXCAVATION, TRENCHING, AND TREE PROTECTION REQUIREMENTS.
4. RUN UNDERGROUND CONDUITS WITH LONG SWEEPS AND PULL WIRES BETWEEN CONDUIT RUNS AS MUCH AS POSSIBLE TO MINIMIZE THE USE OF HANDHOLES. PROVIDE ADDITIONAL HANDHOLES AS REQUIRED FOR RUNS LONGER THAN 300 FEET. MAKE FIELD ADJUSTMENTS TO HANDHOLE'S LOCATIONS AS REQUIRED. PROVIDE CONDUITS UNDER ROADWAYS FOR DIRECT BURIED WIRING. SIZE CONDUITS TO MEET NEC.
5. COORDINATE WITH SITE CONDITIONS AND MAKE NECESSARY FIELD ADJUSTMENTS TO EQUIPMENT'S LOCATIONS TO MAINTAIN PROPER CLEARANCES.
6. SEE E1.1 FOR TRANSFORMER SCHEDULE.
7. SEE E3.1 FOR FEEDER REQUIREMENTS.
8. SEE E4.1 FOR DISTRIBUTION CENTER STAND DETAILS, RV POWER POST DETAIL, AND NON-ENCASED/DIRECT BURIED CONDUIT DETAILS.
9. SEE E4.2 FOR TRANSFORMER DETAIL AND HANDHOLE DETAIL.
10. SEE E5.1 AND E5.2 FOR PANEL SCHEDULES.

REFERENCED NOTES:

1. PROVIDE FEED-THRU INSERTS AS REQUIRED TO ALLOW FOR LOOP FEEDING EXISTING TRANSFORMER. PROVIDE 15KV, #1/0 SOLID AL WITH CONCENTRIC CU WIRES.
2. ALTERNATELY, PROVIDE 15KV, #1/0 SOLID AL WITH CONCENTRIC CU WIRES FROM TRANSFORMER T11 UP TO POLE HEIGHT + 20' SLACK.
3. COORDINATE RISER LOCATION WITH OWNER. PROVIDE 20' EXTRA SLACK OF SERVICE WIRING. PROVIDE GROUND RODS AND #1/0G IN 3/4"C TO OWNER PROVIDED PANEL. RECONNECTIONS TO EXISTING BUILDING EQUIPMENT AND DEVICES TO BE DONE BY OWNER.

REVISIONS:

DATE:	DESCRIPTION:	BY:
7/11/16	REV 2 - NEW SHEET E2.2	WJH

CAPE HENLOPEN STATE PARK
CAMPGROUND IMPROVEMENTS

ELECTRICAL SITE PLAN

SEAL:

CIVIL ENGINEER:

CENTURY ENGINEERING
CONSULTING ENGINEERS, SURVEYORS
4134 N. DUPONT HWY.
DOVER, DELAWARE 19901

CEI NO.: 125002.15

DELAWARE DEPARTMENT OF NATURAL RESOURCES AND ENVIRONMENTAL CONTROL

DESIGNED BY: SDT

DRAWN BY: SDT

CHECKED BY: SGH

DATE: JUNE 28, 2016

SCALE: 1"=40'

SHEET NO.: E2.2

CONTRACT NO.:

G:\PROJECTS\125002.0E (DNREC Civil Engineering Services – 2012)\125002.15 (Cape Campground Improvements)\NewCumberland\WC CADD\Plan sheets\E2.2 ELECTRICAL SITE PLAN.dwg, 7/8/2016 3:33 PM

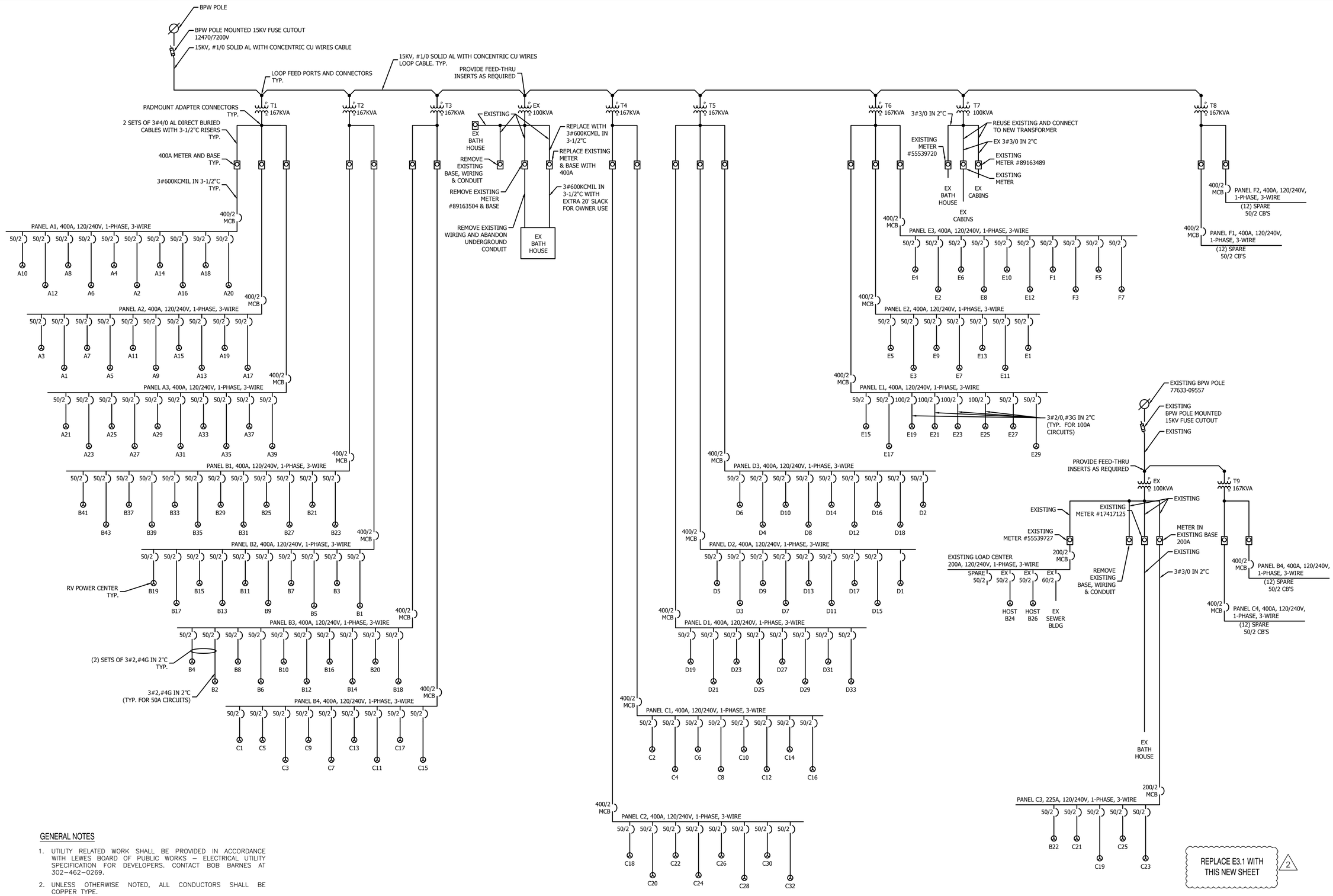

GENERAL NOTES

1. UTILITY RELATED WORK SHALL BE PROVIDED IN ACCORDANCE WITH LEWES BOARD OF PUBLIC WORKS – ELECTRICAL UTILITY SPECIFICATION FOR DEVELOPERS. CONTACT BOB BARNES AT 302–462–0269.
2. UNLESS OTHERWISE NOTED, ALL CONDUCTORS SHALL BE COPPER TYPE.

ONE-LINE DIAGRAMS

NO SCALE

REVISIONS:

DATE:	DESCRIPTION:	BY:
7/11/16	REV 2 - NEW SHEET E3.1	WJH

CAPE HENLOPEN STATE PARK CAMPGROUND IMPROVEMENTS

ELECTRICAL ONE-LINE DIAGRAMS

SEAL:

CIVIL ENGINEER:

CENTURY ENGINEERING
CONSULTING ENGINEERS, SURVEYORS
4134 N. DUPONT HWY.
DOVER, DELAWARE 19901

CEI NO.: 125002.15

DELAWARE DEPARTMENT OF NATURAL RESOURCES AND ENVIRONMENTAL CONTROL

DESIGNED BY: SDT

DRAWN BY: SDT

CHECKED BY: SGH

DATE: JUNE 28, 2016

SCALE: N/A

SHEET NO.: E3.1

CONTRACT NO.:

G:\PROJECTS\125002.CE (DNREC Cape Engineering Services - 2017)\125002.15 (Cape Campground Improvements)\NewCumberland\NC CADD\Plan sheets\E3.1 ELECTRICAL ONE-LINE DIAGRAMS.dwg, 7/8/2016 3:33 PM

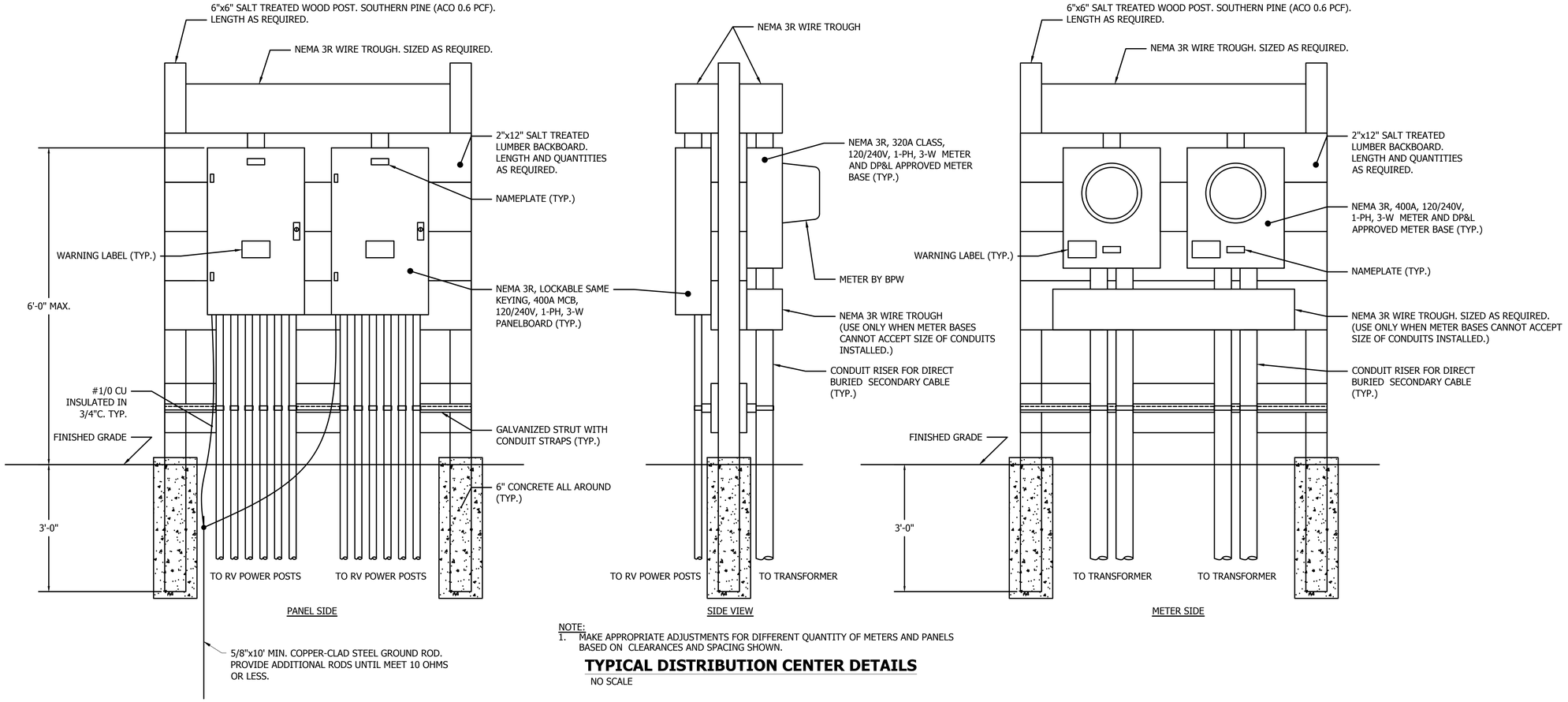

NOTE:
1. MAKE APPROPRIATE ADJUSTMENTS FOR DIFFERENT QUANTITY OF METERS AND PANELS BASED ON CLEARANCES AND SPACING SHOWN.

TYPICAL DISTRIBUTION CENTER DETAILS

NO SCALE

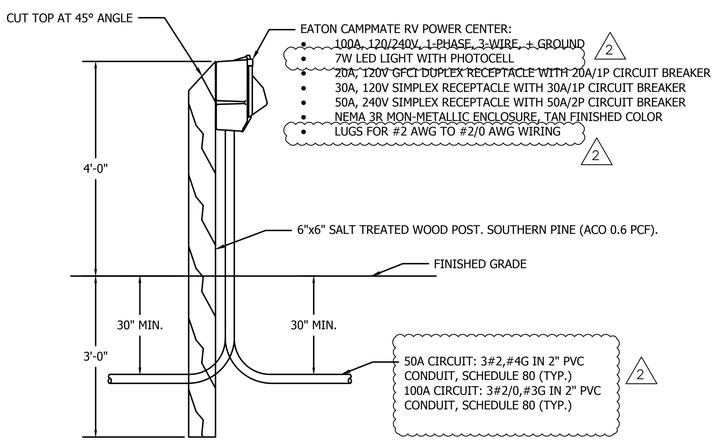

NOTES:
1. MATERIAL AND SIZE OF ATTACHMENT CLAMPS AND SCREWS SHALL BE APPROVED BY THE ENGINEER.
2. SEE PLAN FOR LOCATION OF POWER POSTS.

TYPICAL POWER POST DETAIL

NO SCALE

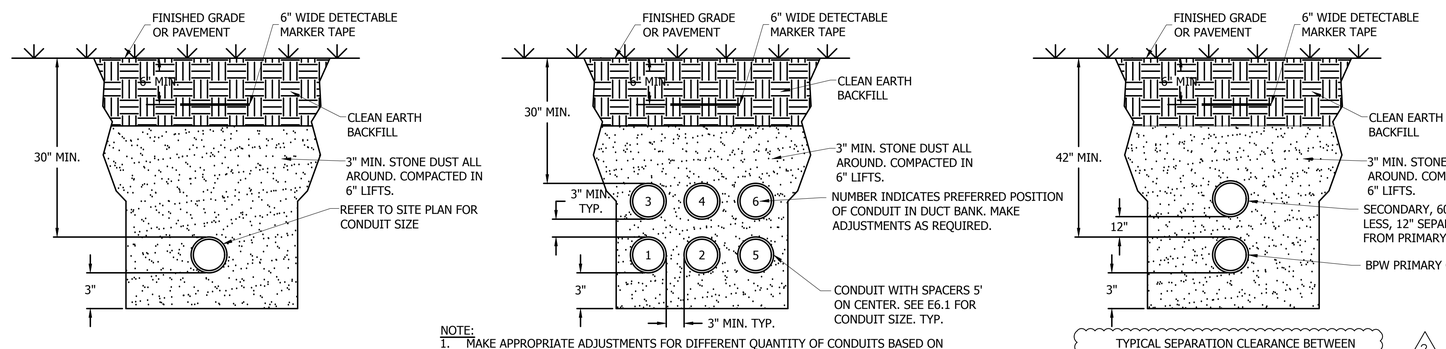

NOTE:
1. MAKE APPROPRIATE ADJUSTMENTS FOR DIFFERENT QUANTITY OF CONDUITS BASED ON CLEARANCES AND SPACING SHOWN.

TYPICAL DIRECT-BURIED CONDUIT DETAILS

NO SCALE

REVISIONS:

DATE:	DESCRIPTION:	BY:
7/11/16	REV 2 - REVISED DETAILS	WJH

CAPE HENLOPEN STATE PARK CAMPGROUND IMPROVEMENTS

ELECTRICAL DETAILS

SEAL:

CIVIL ENGINEER:

CENTURY ENGINEERING
CONSULTING ENGINEERS, SURVEYORS
4134 N. DUPONT HWY.
DOVER, DELAWARE 19901

CEI NO.: 125002.15

DELAWARE DEPARTMENT OF NATURAL RESOURCES AND ENVIRONMENTAL CONTROL

DESIGNED BY: SDT

DRAWN BY: SDT

CHECKED BY: SGH

DATE: JUNE 28, 2016

SCALE: N/A

SHEET NO.: E4.1

CONTRACT NO.:

G:\PROJECTS\125002.0E (DNREC Civil Engineering Services - 2017)\125002.15 (Cape Campground Improvements)\NewCumberland\AC CADD\Plan sheets\E4.1 ELECTRICAL DETAILS.dwg, 7/8/2016 3:23 PM

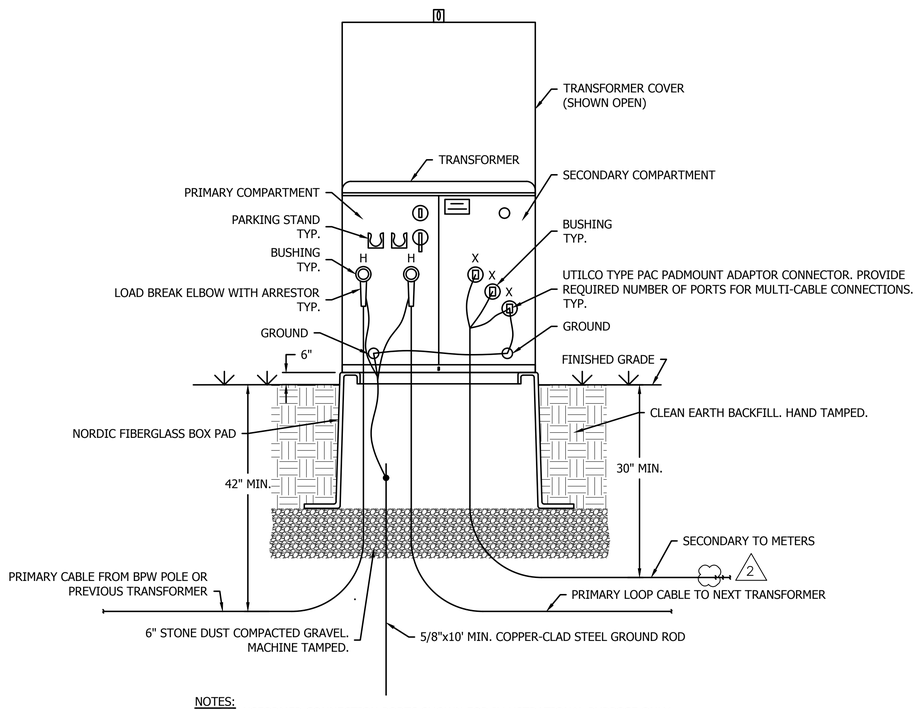

NOTES:
1. TRANSFORMER CONNECTION PORTS SHOWN FOR ILLUSTRATIONAL PURPOSE ONLY. COMPLY WITH MANUFACTURER'S SHOP DRAWINGS AND INSTALLATION INSTRUCTIONS.
2. SEE PLAN FOR LOCATION OF TRANSFORMERS.

TYPICAL TRANSFORMER LOOP-FEED INSTALLATION DETAIL

NO SCALE

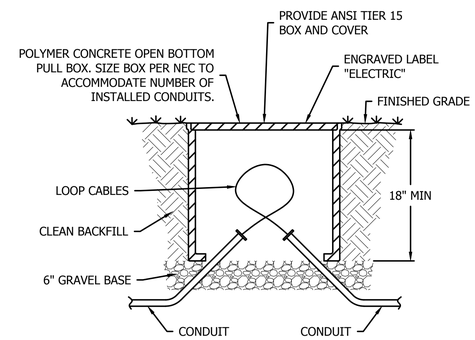

HANDHOLE/PULL BOX DETAIL

NO SCALE

REVISIONS:

DATE:	DESCRIPTION:	BY:
7/11/16	REV 2 - REVISED DETAIL	WJH

CAPE HENLOPEN STATE PARK CAMPGROUND IMPROVEMENTS

ELECTRICAL DETAILS

SEAL:

CIVIL ENGINEER:

CENTURY ENGINEERING
CONSULTING ENGINEERS, SURVEYORS
4134 N. DUPONT HWY.
DOVER, DELAWARE 19901

CEI NO.: 125002.15

DELAWARE DEPARTMENT OF NATURAL RESOURCES AND ENVIRONMENTAL CONTROL

DESIGNED BY: SDT

DRAWN BY: SDT

CHECKED BY: SGH

DATE: JUNE 28, 2016

SCALE: N/A

SHEET NO.: E4.2

CONTRACT NO.:

G:\PROJECTS\125002.0E (DNREC Civil Engineering Services - 2012)\125002.15 (Cape Campground Improvements)\NewCumberlandSew\NC CADD\Plan sheets\E4.2 ELECTRICAL DETAILS.dwg, 7/8/2016 3:23 PM

PANEL NAME: A1

TYPE: SQUARE D TYPE NQ
CIRCUIT BREAKER MOUNTING SPACE: 30
MAIN BUS RATING: 400 AMPS
MAIN CIRCUIT BREAKER: 400 AMPS, 22KAIC
ARC-FLASH LABEL

LOCATION: DISTRIBUTION CENTER STAND A1
VOLTAGE: 120/240V, 1-PHASE, 3-WIRE
PANEL MOUNTING: SURFACE
PANEL ENCLOSURE (NEMA): 3R
BRANCH MIN. A. I. C. RATING: 10K

CIR. No.	DESCRIPTION	CIR. BKR.	LOAD - VA AØ	LOAD - VA BØ	LOAD - VA AØ	LOAD - VA BØ	CIR. BKR.	DESCRIPTION	CIR. No.
1	POWER POST	50/2	4800		4800		50/2	POWER POST	2
3	A12			4800		4800		A14	4
5	POWER POST	50/2	4800		4800		50/2	POWER POST	6
7	A10			4800		4800		A16	8
9	POWER POST	50/2	4800		4800		50/2	POWER POST	10
11	A8			4800		4800		A18	12
13	POWER POST	50/2	4800		4800		50/2	POWER POST	14
15	A6			4800		4800		A20	16
17	POWER POST	50/2	4800					SPACE	18
19	A4			4800				SPACE	20
21	POWER POST	50/2	4800					SPACE	22
23	A2			4800				SPACE	24
25	SPACE							SPACE	26
27	SPACE							SPACE	28
29	SPACE							SPACE	30
			28800	28800	19200	19200			

CONNECTED LOAD:
AØ 48.00 KVA
BØ 48.00 KVA
TOTAL 96.00 KVA
DMD 48.00 KVA

X ISOLATED NEUTRAL BUS
X EQUIPMENT GROUND BUS
NOTES:
GROUNDING AND BONDING IN COMPLIANCE WITH THE NEC.

PANEL NAME: B1

TYPE: SQUARE D TYPE NQ
CIRCUIT BREAKER MOUNTING SPACE: 30
MAIN BUS RATING: 400 AMPS
MAIN CIRCUIT BREAKER: 400 AMPS, 22KAIC
ARC-FLASH LABEL

LOCATION: DISTRIBUTION CENTER STAND B1
VOLTAGE: 120/240V, 1-PHASE, 3-WIRE
PANEL MOUNTING: SURFACE
PANEL ENCLOSURE (NEMA): 3R
BRANCH MIN. A. I. C. RATING: 10K

CIR. No.	DESCRIPTION	CIR. BKR.	LOAD - VA AØ	LOAD - VA BØ	LOAD - VA AØ	LOAD - VA BØ	CIR. BKR.	DESCRIPTION	CIR. No.
1	POWER POST	50/2	4800		4800		50/2	POWER POST	2
3	B21			4800		4800		B35	4
5	POWER POST	50/2	4800		4800		50/2	POWER POST	6
7	B23			4800		4800		B37	8
9	POWER POST	50/2	4800		4800		50/2	POWER POST	10
11	B25			4800		4800		B39	12
13	POWER POST	50/2	4800		4800		50/2	POWER POST	14
15	B27			4800		4800		B41	16
17	POWER POST	50/2	4800		4800		50/2	POWER POST	18
19	B29			4800		4800		B43	20
21	POWER POST	50/2	4800					SPACE	22
23	B31			4800				SPACE	24
25	POWER POST	50/2	4800					SPACE	26
27	B33			4800				SPACE	28
29	SPACE							SPACE	30
			33600	33600	24000	24000			

CONNECTED LOAD:
AØ 57.60 KVA
BØ 57.60 KVA
TOTAL 115.20 KVA
DMD 57.60 KVA

X ISOLATED NEUTRAL BUS
X EQUIPMENT GROUND BUS
NOTES:
GROUNDING AND BONDING IN COMPLIANCE WITH THE NEC.

PANEL NAME: B4

TYPE: SQUARE D TYPE NQ
CIRCUIT BREAKER MOUNTING SPACE: 30
MAIN BUS RATING: 400 AMPS
MAIN CIRCUIT BREAKER: 400 AMPS, 22KAIC
ARC-FLASH LABEL

LOCATION: DISTRIBUTION CENTER STAND B2
VOLTAGE: 120/240V, 1-PHASE, 3-WIRE
PANEL MOUNTING: SURFACE
PANEL ENCLOSURE (NEMA): 3R
BRANCH MIN. A. I. C. RATING: 10K

CIR. No.	DESCRIPTION	CIR. BKR.	LOAD - VA AØ	LOAD - VA BØ	LOAD - VA AØ	LOAD - VA BØ	CIR. BKR.	DESCRIPTION	CIR. No.
1	POWER POST	50/2	4800		4800		50/2	POWER POST	2
3	C9			4800		4800		C17	4
5	POWER POST	50/2	4800		4800		50/2	POWER POST	6
7	C7			4800		4800		C15	8
9	POWER POST	50/2	4800		4800		50/2	POWER POST	10
11	C5			4800		4800		C13	12
13	POWER POST	50/2	4800		4800		50/2	POWER POST	14
15	C3			4800		4800		C11	16
17	POWER POST	50/2	4800					SPACE	18
19	C1			4800				SPACE	20
21	SPACE							SPACE	22
23	SPACE							SPACE	24
25	SPACE							SPACE	26
27	SPACE							SPACE	28
29	SPACE							SPACE	30
			24000	24000	19200	19200			

CONNECTED LOAD:
AØ 43.20 KVA
BØ 43.20 KVA
TOTAL 86.40 KVA
DMD 47.52 KVA

X ISOLATED NEUTRAL BUS
X EQUIPMENT GROUND BUS
NOTES:
GROUNDING AND BONDING IN COMPLIANCE WITH THE NEC.

PANEL NAME: A2

TYPE: SQUARE D TYPE NQ
CIRCUIT BREAKER MOUNTING SPACE: 30
MAIN BUS RATING: 400 AMPS
MAIN CIRCUIT BREAKER: 400 AMPS, 22KAIC
ARC-FLASH LABEL

LOCATION: DISTRIBUTION CENTER STAND A2
VOLTAGE: 120/240V, 1-PHASE, 3-WIRE
PANEL MOUNTING: SURFACE
PANEL ENCLOSURE (NEMA): 3R
BRANCH MIN. A. I. C. RATING: 10K

CIR. No.	DESCRIPTION	CIR. BKR.	LOAD - VA AØ	LOAD - VA BØ	LOAD - VA AØ	LOAD - VA BØ	CIR. BKR.	DESCRIPTION	CIR. No.
1	POWER POST	50/2	4800		4800		50/2	POWER POST	2
3	A21			4800		4800		A35	4
5	POWER POST	50/2	4800		4800		50/2	POWER POST	6
7	A23			4800		4800		A37	8
9	POWER POST	50/2	4800		4800		50/2	POWER POST	10
11	A25			4800		4800		A39	12
13	POWER POST	50/2	4800					SPACE	14
15	A27			4800				SPACE	16
17	POWER POST	50/2	4800					SPACE	18
19	A29			4800				SPACE	20
21	POWER POST	50/2	4800					SPACE	22
23	A31			4800				SPACE	24
25	POWER POST	50/2	4800					SPACE	26
27	A33			4800				SPACE	28
29	SPACE							SPACE	30
			33600	33600	14400	14400			

CONNECTED LOAD:
AØ 48.00 KVA
BØ 48.00 KVA
TOTAL 96.00 KVA
DMD 48.00 KVA

X ISOLATED NEUTRAL BUS
X EQUIPMENT GROUND BUS
NOTES:
GROUNDING AND BONDING IN COMPLIANCE WITH THE NEC.

PANEL NAME: B2

TYPE: SQUARE D TYPE NQ
CIRCUIT BREAKER MOUNTING SPACE: 30
MAIN BUS RATING: 400 AMPS
MAIN CIRCUIT BREAKER: 400 AMPS, 22KAIC
ARC-FLASH LABEL

LOCATION: DISTRIBUTION CENTER STAND B1
VOLTAGE: 120/240V, 1-PHASE, 3-WIRE
PANEL MOUNTING: SURFACE
PANEL ENCLOSURE (NEMA): 3R
BRANCH MIN. A. I. C. RATING: 10K

CIR. No.	DESCRIPTION	CIR. BKR.	LOAD - VA AØ	LOAD - VA BØ	LOAD - VA AØ	LOAD - VA BØ	CIR. BKR.	DESCRIPTION	CIR. No.
1	POWER POST	50/2	4800		4800		50/2	POWER POST	2
3	B19			4800		4800		B13	4
5	POWER POST	50/2	4800		4800		50/2	POWER POST	6
7	B17			4800		4800		B11	8
9	POWER POST	50/2	4800		4800		50/2	POWER POST	10
11	B15			4800		4800		B9	12
13	SPACE				4800		50/2	POWER POST	14
15	SPACE					4800		B7	16
17	SPACE				4800		50/2	POWER POST	18
19	SPACE					4800		B5	20
21	SPACE				4800		50/2	POWER POST	22
23	SPACE					4800		B3	24
25	SPACE				4800		50/2	POWER POST	26
27	SPACE					4800		B1	28
29	SPACE							SPACE	30
			14400	14400	33600	33600			

CONNECTED LOAD:
AØ 48.00 KVA
BØ 48.00 KVA
TOTAL 96.00 KVA
DMD 48.00 KVA

X ISOLATED NEUTRAL BUS
X EQUIPMENT GROUND BUS
NOTES:
GROUNDING AND BONDING IN COMPLIANCE WITH THE NEC.

PANEL NAME: C1

TYPE: SQUARE D TYPE NQ
CIRCUIT BREAKER MOUNTING SPACE: 30
MAIN BUS RATING: 400 AMPS
MAIN CIRCUIT BREAKER: 400 AMPS, 22KAIC
ARC-FLASH LABEL

LOCATION: DISTRIBUTION CENTER STAND C1
VOLTAGE: 120/240V, 1-PHASE, 3-WIRE
PANEL MOUNTING: SURFACE
PANEL ENCLOSURE (NEMA): 3R
BRANCH MIN. A. I. C. RATING: 10K

CIR. No.	DESCRIPTION	CIR. BKR.	LOAD - VA AØ	LOAD - VA BØ	LOAD - VA AØ	LOAD - VA BØ	CIR. BKR.	DESCRIPTION	CIR. No.
1	POWER POST	50/2	4800		4800		50/2	POWER POST	2
3	C8			4800		4800		C10	4
5	POWER POST	50/2	4800		4800		50/2	POWER POST	6
7	C6			4800		4800		C12	8
9	POWER POST	50/2	4800		4800		50/2	POWER POST	10
11	C4			4800		4800		C14	12
13	POWER POST	50/2	4800		4800		50/2	POWER POST	14
15	C2			4800		4800		C16	16
17	SPACE							SPACE	18
19	SPACE							SPACE	20
21	SPACE							SPACE	22
23	SPACE							SPACE	24
25	SPACE							SPACE	26
27	SPACE							SPACE	28
29	SPACE							SPACE	30
			19200	19200	19200	19200			

CONNECTED LOAD:
AØ 38.40 KVA
BØ 38.40 KVA
TOTAL 76.80 KVA
DMD 42.24 KVA

X ISOLATED NEUTRAL BUS
X EQUIPMENT GROUND BUS
NOTES:
GROUNDING AND BONDING IN COMPLIANCE WITH THE NEC.

PANEL NAME: A3

TYPE: SQUARE D TYPE NQ
CIRCUIT BREAKER MOUNTING SPACE: 30
MAIN BUS RATING: 400 AMPS
MAIN CIRCUIT BREAKER: 400 AMPS, 22KAIC
ARC-FLASH LABEL

LOCATION: DISTRIBUTION CENTER STAND A2
VOLTAGE: 120/240V, 1-PHASE, 3-WIRE
PANEL MOUNTING: SURFACE
PANEL ENCLOSURE (NEMA): 3R
BRANCH MIN. A. I. C. RATING: 10K

CIR. No.	DESCRIPTION	CIR. BKR.	LOAD - VA AØ	LOAD - VA BØ	LOAD - VA AØ	LOAD - VA BØ	CIR. BKR.	DESCRIPTION	CIR. No.
1	POWER POST	50/2	4800		4800		50/2	POWER POST	2
3	A19			4800		4800		A13	4
5	POWER POST	50/2	4800		4800		50/2	POWER POST	6
7	A17			4800		4800		A11	8
9	POWER POST	50/2	4800		4800		50/2	POWER POST	10
11	A15			4800		4800		A9	12
13	SPACE				4800		50/2	POWER POST	14
15	SPACE					4800		A7	16
17	SPACE				4800		50/2	POWER POST	18
19	SPACE					4800		A5	20
21	SPACE				4800		50/2	POWER POST	22
23	SPACE					4800		A3	24
25	SPACE				4800		50/2	POWER POST	26
27	SPACE					4800		A1	28
29	SPACE							SPACE	30
			14400	14400	33600	33600			

CONNECTED LOAD:
AØ 48.00 KVA
BØ 48.00 KVA
TOTAL 96.00 KVA
DMD 48.00 KVA

X ISOLATED NEUTRAL BUS
X EQUIPMENT GROUND BUS
NOTES:
GROUNDING AND BONDING IN COMPLIANCE WITH THE NEC.

PANEL NAME: B3

TYPE: SQUARE D TYPE NQ
CIRCUIT BREAKER MOUNTING SPACE: 30
MAIN BUS RATING: 400 AMPS
MAIN CIRCUIT BREAKER: 400 AMPS, 22KAIC
ARC-FLASH LABEL

LOCATION: DISTRIBUTION CENTER STAND B2
VOLTAGE: 120/240V, 1-PHASE, 3-WIRE
PANEL MOUNTING: SURFACE
PANEL ENCLOSURE (NEMA): 3R
BRANCH MIN. A. I. C. RATING: 10K

CIR. No.	DESCRIPTION	CIR. BKR.	LOAD - VA AØ	LOAD - VA BØ	LOAD - VA AØ	LOAD - VA BØ	CIR. BKR.	DESCRIPTION	CIR. No.
1	POWER POST	50/2	4800		4800		50/2	POWER POST	2
3	B14			4800		4800		B20	4
5	POWER POST	50/2	4800		4800		50/2	POWER POST	6
7	B12			4800		4800		B18	8
9	POWER POST	50/2	4800		4800		50/2	POWER POST	10
11	B10			4800		4800		B16	12
13	POWER POST	50/2	4800					SPACE	14
15	B8			4800				SPACE	16
17	POWER POST	50/2	4800					SPACE	18
19	B6			4800				SPACE	20
21	POWER POST	50/2	4800					SPACE	22
23	B4			4800				SPACE	24
25	POWER POST	50/2	4800					SPACE	26
27	B2			4800				SPACE	28
29	SPACE							SPACE	30
			33600	33600	14400	14400			

CONNECTED LOAD:
AØ 48.00 KVA
BØ 48.00 KVA
TOTAL 96.00 KVA
DMD 48.00 KVA

X ISOLATED NEUTRAL BUS
X EQUIPMENT GROUND BUS
NOTES:
GROUNDING AND BONDING IN COMPLIANCE WITH THE NEC.

PANEL NAME: C2

TYPE: SQUARE D TYPE NQ
CIRCUIT BREAKER MOUNTING SPACE: 30
MAIN BUS RATING: 400 AMPS
MAIN CIRCUIT BREAKER: 400 AMPS, 22KAIC
ARC-FLASH LABEL

LOCATION: DISTRIBUTION CENTER STAND C1
VOLTAGE: 120/240V, 1-PHASE, 3-WIRE
PANEL MOUNTING: SURFACE
PANEL ENCLOSURE (NEMA): 3R
BRANCH MIN. A. I. C. RATING: 10K

CIR. No.	DESCRIPTION	CIR. BKR.	LOAD - VA AØ	LOAD - VA BØ	LOAD - VA AØ	LOAD - VA BØ	CIR. BKR.	DESCRIPTION	CIR. No.
1	POWER POST	50/2	4800		4800		50/2	POWER POST	2
3	C18			4800		4800		C26	4
5	POWER POST	50/2	4800		4800		50/2	POWER POST	6
7	C20			4800		4800		C28	8
9	POWER POST	50/2	4800		4800		50/2	POWER POST	10
11	C22			4800		4800		C30	12
13	POWER POST	50/2	4800		4800		50/2	POWER POST	14
15	C24			4800		4800		C32	16
17	SPACE							SPACE	18
19	SPACE							SPACE	20
21	SPACE							SPACE	22
23	SPACE							SPACE	24
25	SPACE							SPACE	26
27	SPACE							SPACE	28
29	SPACE							SPACE	30
			19200	19200	19200	19200			

CONNECTED LOAD:
AØ 38.40 KVA
BØ 38.40 KVA
TOTAL 76.80 KVA
DMD 42.24 KVA

X ISOLATED NEUTRAL BUS
X EQUIPMENT GROUND BUS
NOTES:
GROUNDING AND BONDING IN COMPLIANCE WITH THE NEC.

2

REVISIONS:

DATE:	DESCRIPTION:	BY:
7/11/16	REV 2 - REVISED SCHEDULES	WJH

CAPE HENLOPEN STATE PARK CAMPGROUND IMPROVEMENTS

ELECTRICAL SCHEDULES

SEAL:

CIVIL ENGINEER:
CENTURY ENGINEERING
CONSULTING ENGINEERS, SURVEYORS
4134 N. DUPONT HWY.
DOVER, DELAWARE 19901

CEI NO.: 125002.15

DELAWARE DEPARTMENT OF NATURAL RESOURCES AND ENVIRONMENTAL CONTROL

DESIGNED BY: SDT

DRAWN BY: SDT

CHECKED BY: SGH

DATE: JUNE 28, 2016

SCALE: N/A

SHEET NO.: E5.1

CONTRACT NO.:

G:\PROJECTS\125002.0E (DNREC Civil Engineering Services - 2012)\125002.15 (Cape Campground Improvements)\NewCumberlandUse\NC CADD\Plan sheets\E5.1 ELECTRICAL SCHEDULES.dwg, 7/8/2016 3:23 PM

PANEL NAME: C3

TYPE: SQUARE D TYPE NQ
CIRCUIT BREAKER MOUNTING SPACE: 30
MAIN BUS RATING: 225 AMPS
MAIN CIRCUIT BREAKER: 200 AMPS, 22KAIC
ARC-FLASH LABEL

LOCATION: DISTRIBUTION CENTER STAND C2
VOLTAGE: 120/240V, 1-PHASE, 3-WIRE
PANEL MOUNTING: SURFACE
PANEL ENCLOSURE (NEMA): 3R
BRANCH MIN. A. I. C. RATING: 10K

CIR. No.	DESCRIPTION	CIR. BKR.	LOAD - VA AØ	LOAD - VA BØ	LOAD - VA AØ	LOAD - VA BØ	CIR. BKR.	DESCRIPTION	CIR. No.
1	POWER POST	50/2	4800					SPACE	2
3	C23			4800				SPACE	4
5	POWER POST	50/2	4800					SPACE	6
7	C25			4800				SPACE	8
9	POWER POST	50/2	4800					SPACE	10
11	C19			4800				SPACE	12
13	POWER POST	50/2	4800					SPACE	14
15	C21			4800				SPACE	16
17	POWER POST	50/2	4800					SPACE	18
19	B22			4800				SPACE	20
21	SPACE							SPACE	22
23	SPACE							SPACE	24
25	SPACE							SPACE	26
27	SPACE							SPACE	28
29	SPACE							SPACE	30
			24000	24000					

CONNECTED LOAD:
AØ 24.00 KVA
BØ 24.00 KVA
TOTAL 48.00 KVA
DMD 31.20 KVA

X ISOLATED NEUTRAL BUS
X EQUIPMENT GROUND BUS
NOTES:
GROUNDING AND BONDING IN COMPLIANCE WITH THE NEC.

PANEL NAME: D1

TYPE: SQUARE D TYPE NQ
CIRCUIT BREAKER MOUNTING SPACE: 30
MAIN BUS RATING: 400 AMPS
MAIN CIRCUIT BREAKER: 400 AMPS, 22KAIC
ARC-FLASH LABEL

LOCATION: DISTRIBUTION CENTER STAND D1
VOLTAGE: 120/240V, 1-PHASE, 3-WIRE
PANEL MOUNTING: SURFACE
PANEL ENCLOSURE (NEMA): 3R
BRANCH MIN. A. I. C. RATING: 10K

CIR. No.	DESCRIPTION	CIR. BKR.	LOAD - VA AØ	LOAD - VA BØ	LOAD - VA AØ	LOAD - VA BØ	CIR. BKR.	DESCRIPTION	CIR. No.
1	POWER POST	50/2	4800		4800		50/2	POWER POST	2
3	D19			4800		4800		D33	4
5	POWER POST	50/2	4800					SPACE	6
7	D21			4800				SPACE	8
9	POWER POST	50/2	4800					SPACE	10
11	D23			4800				SPACE	12
13	POWER POST	50/2	4800					SPACE	14
15	D25			4800				SPACE	16
17	POWER POST	50/2	4800					SPACE	18
19	D27			4800				SPACE	20
21	POWER POST	50/2	4800					SPACE	22
23	D29			4800				SPACE	24
25	POWER POST	50/2	4800					SPACE	26
27	D31			4800				SPACE	28
29	SPACE							SPACE	30
			33600	33600	4800	4800			

CONNECTED LOAD:
AØ 38.40 KVA
BØ 38.40 KVA
TOTAL 76.80 KVA
DMD 42.24 KVA

X ISOLATED NEUTRAL BUS
X EQUIPMENT GROUND BUS
NOTES:
GROUNDING AND BONDING IN COMPLIANCE WITH THE NEC.

PANEL NAME: E1

TYPE: SQUARE D TYPE NQ
CIRCUIT BREAKER MOUNTING SPACE: 30
MAIN BUS RATING: 400 AMPS
MAIN CIRCUIT BREAKER: 400 AMPS, 22KAIC
ARC-FLASH LABEL

LOCATION: DISTRIBUTION CENTER STAND E1
VOLTAGE: 120/240V, 1-PHASE, 3-WIRE
PANEL MOUNTING: SURFACE
PANEL ENCLOSURE (NEMA): 3R
BRANCH MIN. A. I. C. RATING: 10K

CIR. No.	DESCRIPTION	CIR. BKR.	LOAD - VA AØ	LOAD - VA BØ	LOAD - VA AØ	LOAD - VA BØ	CIR. BKR.	DESCRIPTION	CIR. No.
1	POWER POST	50/2	4800		4800		50/2	POWER POST	2
3	E15			4800		4800		E27	4
5	POWER POST	50/2	4800		4800		50/2	POWER POST	6
7	E17			4800		4800		E29	8
9	POWER POST	100/2	9600					SPACE	10
11	E19			9600				SPACE	12
13	POWER POST	100/2	9600					SPACE	14
15	E21			9600				SPACE	16
17	POWER POST	100/2	9600					SPACE	18
19	E23			9600				SPACE	20
21	POWER POST	100/2	9600					SPACE	22
23	E25			9600				SPACE	24
25	SPACE							SPACE	26
27	SPACE							SPACE	28
29	SPACE							SPACE	30
			48000	48000	9600	9600			

CONNECTED LOAD:
AØ 57.60 KVA
BØ 57.60 KVA
TOTAL 115.20 KVA
DMD 63.36 KVA

X ISOLATED NEUTRAL BUS
X EQUIPMENT GROUND BUS
NOTES:
GROUNDING AND BONDING IN COMPLIANCE WITH THE NEC.

PANEL NAME: B4, C4, F1, F2

TYPE: SQUARE D TYPE NQ
CIRCUIT BREAKER MOUNTING SPACE: 30
MAIN BUS RATING: 400 AMPS
MAIN CIRCUIT BREAKER: 400 AMPS, 22KAIC
ARC-FLASH LABEL

LOCATION: DISTRIBUTION CENTERS B3, C3, F1, F2
VOLTAGE: 120/240V, 1-PHASE, 3-WIRE
PANEL MOUNTING: SURFACE
PANEL ENCLOSURE (NEMA): 3R
BRANCH MIN. A. I. C. RATING: 10K

CIR. No.	DESCRIPTION	CIR. BKR.	LOAD - VA AØ	LOAD - VA BØ	LOAD - VA AØ	LOAD - VA BØ	CIR. BKR.	DESCRIPTION	CIR. No.
1	SPARE	50/2					50/2	SPARE	2
3									4
5	SPARE	50/2					50/2	SPARE	6
7									8
9	SPARE	50/2					50/2	SPARE	10
11									12
13	SPARE	50/2					50/2	SPARE	14
15									16
17	SPARE	50/2					50/2	SPARE	18
19									20
21	SPARE	50/2					50/2	SPARE	22
23									24
25	SPACE							SPACE	26
27	SPACE							SPACE	28
29	SPACE							SPACE	30

CONNECTED LOAD:
AØ
BØ
TOTAL
DMD

X ISOLATED NEUTRAL BUS
X EQUIPMENT GROUND BUS
NOTES:
GROUNDING AND BONDING IN COMPLIANCE WITH THE NEC.

PANEL NAME: D2

TYPE: SQUARE D TYPE NQ
CIRCUIT BREAKER MOUNTING SPACE: 30
MAIN BUS RATING: 400 AMPS
MAIN CIRCUIT BREAKER: 400 AMPS, 22KAIC
ARC-FLASH LABEL

LOCATION: DISTRIBUTION CENTER STAND D1
VOLTAGE: 120/240V, 1-PHASE, 3-WIRE
PANEL MOUNTING: SURFACE
PANEL ENCLOSURE (NEMA): 3R
BRANCH MIN. A. I. C. RATING: 10K

CIR. No.	DESCRIPTION	CIR. BKR.	LOAD - VA AØ	LOAD - VA BØ	LOAD - VA AØ	LOAD - VA BØ	CIR. BKR.	DESCRIPTION	CIR. No.
1	POWER POST	50/2	4800		4800		50/2	POWER POST	2
3	D17			4800		4800		D13	4
5	POWER POST	50/2	4800		4800		50/2	POWER POST	6
7	D15			4800		4800		D11	8
9	SPACE				4800		50/2	POWER POST	10
11	SPACE					4800		D9	12
13	SPACE				4800		50/2	POWER POST	14
15	SPACE					4800		D7	16
17	SPACE				4800		50/2	POWER POST	18
19	SPACE					4800		D5	20
21	SPACE				4800		50/2	POWER POST	22
23	SPACE					4800		D3	24
25	SPACE				4800		50/2	POWER POST	26
27	SPACE					4800		D1	28
29	SPACE							SPACE	30
			9600	9600	33600	33600			

CONNECTED LOAD:
AØ 43.20 KVA
BØ 43.20 KVA
TOTAL 86.40 KVA
DMD 47.52 KVA

X ISOLATED NEUTRAL BUS
X EQUIPMENT GROUND BUS
NOTES:
GROUNDING AND BONDING IN COMPLIANCE WITH THE NEC.

PANEL NAME: E2

TYPE: SQUARE D TYPE NQ
CIRCUIT BREAKER MOUNTING SPACE: 30
MAIN BUS RATING: 400 AMPS
MAIN CIRCUIT BREAKER: 400 AMPS, 22KAIC
ARC-FLASH LABEL

LOCATION: DISTRIBUTION CENTER STAND E1
VOLTAGE: 120/240V, 1-PHASE, 3-WIRE
PANEL MOUNTING: SURFACE
PANEL ENCLOSURE (NEMA): 3R
BRANCH MIN. A. I. C. RATING: 10K

CIR. No.	DESCRIPTION	CIR. BKR.	LOAD - VA AØ	LOAD - VA BØ	LOAD - VA AØ	LOAD - VA BØ	CIR. BKR.	DESCRIPTION	CIR. No.
1	SPACE				4800		50/2	POWER POST	2
3	SPACE					4800		E13	4
5	SPACE				4800		50/2	POWER POST	6
7	SPACE					4800		E11	8
9	SPACE				4800		50/2	POWER POST	10
11	SPACE					4800		E9	12
13	SPACE				4800		50/2	POWER POST	14
15	SPACE					4800		E7	16
17	SPACE				4800		50/2	POWER POST	18
19	SPACE					4800		E5	20
21	SPACE				4800		50/2	POWER POST	22
23	SPACE					4800		E3	24
25	SPACE				4800		50/2	POWER POST	26
27	SPACE					4800		E1	28
29	SPACE							SPACE	30
					33600	33600			

CONNECTED LOAD:
AØ 33.60 KVA
BØ 33.60 KVA
TOTAL 67.20 KVA
DMD 36.96 KVA

X ISOLATED NEUTRAL BUS
X EQUIPMENT GROUND BUS
NOTES:
GROUNDING AND BONDING IN COMPLIANCE WITH THE NEC.

PANEL NAME: D3

TYPE: SQUARE D TYPE NQ
CIRCUIT BREAKER MOUNTING SPACE: 30
MAIN BUS RATING: 400 AMPS
MAIN CIRCUIT BREAKER: 400 AMPS, 22KAIC
ARC-FLASH LABEL

LOCATION: DISTRIBUTION CENTER STAND D2
VOLTAGE: 120/240V, 1-PHASE, 3-WIRE
PANEL MOUNTING: SURFACE
PANEL ENCLOSURE (NEMA): 3R
BRANCH MIN. A. I. C. RATING: 10K

CIR. No.	DESCRIPTION	CIR. BKR.	LOAD - VA AØ	LOAD - VA BØ	LOAD - VA AØ	LOAD - VA BØ	CIR. BKR.	DESCRIPTION	CIR. No.
1	POWER POST	50/2	4800		4800		50/2	POWER POST	2
3	D14			4800		4800		D18	4
5	POWER POST	50/2	4800		4800		50/2	POWER POST	6
7	D12			4800		4800		D16	8
9	POWER POST	50/2	4800					SPACE	10
11	D10			4800				SPACE	12
13	POWER POST	50/2	4800					SPACE	14
15	D8			4800				SPACE	16
17	POWER POST	50/2	4800					SPACE	18
19	D6			4800				SPACE	20
21	POWER POST	50/2	4800					SPACE	22
23	D4			4800				SPACE	24
25	POWER POST	50/2	4800					SPACE	26
27	D2			4800				SPACE	28
29	SPACE							SPACE	30
			33600	33600	9600	9600			

CONNECTED LOAD:
AØ 43.20 KVA
BØ 43.20 KVA
TOTAL 86.40 KVA
DMD 47.52 KVA

X ISOLATED NEUTRAL BUS
X EQUIPMENT GROUND BUS
NOTES:
GROUNDING AND BONDING IN COMPLIANCE WITH THE NEC.

PANEL NAME: E3

TYPE: SQUARE D TYPE NQ
CIRCUIT BREAKER MOUNTING SPACE: 30
MAIN BUS RATING: 400 AMPS
MAIN CIRCUIT BREAKER: 400 AMPS, 22KAIC
ARC-FLASH LABEL

LOCATION: DISTRIBUTION CENTER STAND E2
VOLTAGE: 120/240V, 1-PHASE, 3-WIRE
PANEL MOUNTING: SURFACE
PANEL ENCLOSURE (NEMA): 3R
BRANCH MIN. A. I. C. RATING: 10K

CIR. No.	DESCRIPTION	CIR. BKR.	LOAD - VA AØ	LOAD - VA BØ	LOAD - VA AØ	LOAD - VA BØ	CIR. BKR.	DESCRIPTION	CIR. No.
1	POWER POST	50/2	4800		4800		50/2	POWER POST	2
3	E2			4800		4800		E6	4
5	POWER POST	50/2	4800		4800		50/2	POWER POST	6
7	E4			4800		4800		E8	8
9	POWER POST	50/2	4800		4800		50/2	POWER POST	10
11	F1			4800		4800		E10	12
13	POWER POST	50/2	4800		4800		50/2	POWER POST	14
15	F3			4800		4800		E12	16
17	POWER POST	50/2	4800					SPACE	18
19	F5			4800				SPACE	20
21	POWER POST	50/2	4800					SPACE	22
23	F7			4800				SPACE	24
25	SPACE							SPACE	26
27	SPACE							SPACE	28
29	SPACE							SPACE	30
			28800	28800	19200	19200			

CONNECTED LOAD:
AØ 48.00 KVA
BØ 48.00 KVA
TOTAL 96.00 KVA
DMD 48.00 KVA

X ISOLATED NEUTRAL BUS
X EQUIPMENT GROUND BUS
NOTES:
GROUNDING AND BONDING IN COMPLIANCE WITH THE NEC.

2

REVISIONS:

DATE:	DESCRIPTION:	BY:
7/11/16	REV 2 - REVISED SCHEDULES	WJH

CAPE HENLOPEN STATE PARK CAMPGROUND IMPROVEMENTS

ELECTRICAL SCHEDULES

SEAL:

CIVIL ENGINEER:

CENTURY ENGINEERING
CONSULTING ENGINEERS, SURVEYORS
4134 N. DUPONT HWY.
DOVER, DELAWARE 19901

CEI NO.: 125002.15

DELAWARE DEPARTMENT OF NATURAL RESOURCES AND ENVIRONMENTAL CONTROL

DESIGNED BY: SDT
DRAWN BY: SDT
CHECKED BY: SGH
DATE: JUNE 28, 2016
SCALE: N/A
SHEET NO.: E-5.2
CONTRACT NO.:

G:\PROJECTS\125002.00 (DNREC Cell Engineering Services - 2012)\125002.15 (Cape Campground Improvements)\NewCumberlandDar\MC CADD\Plan sheets\E-5.2 ELECTRICAL SCHEDULES.dwg, 7/8/2016 3:23 PM