STATE OF DELAWARE
DEPARTMENT OF NATURAL RESOURCES
AND ENVIRONMENTAL CONTRIL
DIVISION OF PARKS AND RECREATION
CONTRACT # 2015-KP-100
DNREC PROJECT NO. KP-24

SPECIFICATIONS (VOLUME 1)
FOR

KILLENS POND WATERPARK RENOVATIONS
PHASE 1

IN

KILLEN POND STATE PARK
SUSSEX COUNTY, DELAWARE

PREPARED
BY

BECKER MORGAN GROUP, INC.

ISSUED FOR FINAL DESIGN REVIEW
AUGUST 20, 2015

NOT FOR BIDDING

NOT FOR BIDDING

000110 - TABLE OF CONTENTS – VOLUME 1

Division	Section Title	Pages
DIVISION 00 - PROCUREMENT AND CONTRACTING REQUIREMENTS		
000110	TABLE OF CONTENTS	4
000115	LIST OF DRAWINGS	4
001116	INVITATION TO BID	2
002113	INSTRUCTIONS TO BIDDERS	12
003132	GEOTECHNICAL DATA	32
004100	BID FORM	6
004101	BID BOND	2
005213	STANDARD FORM OF AGREEMENT BETWEEN OWNER AND CONTRACTOR A101-2007	2
005413	SUPPLEMENT TO AGREEMENT BETWEEN OWNER AND CONTRACTOR	2
006113	PAYMENT BOND	2
006114	PERFORMANCE BOND	2
007223	GENERAL CONDITIONS	2
007300	SUPPLEMENTARY GENERAL CONDITIONS	10
007346	WAGE RATES	2
008113	GENERAL REQUIREMENTS	14
DIVISION 01 - GENERAL REQUIREMENTS		
011000	SUMMARY	4
011400	WORK RESTRICTIONS	2
012100	ALLOWANCES	4
012200	UNIT PRICES	2
012300	ALTERNATES	4
012500	SUBSTITUTION PROCEDURES	4
012600	CONTRACT MODIFICATION PROCEDURES	2
012900	PAYMENT PROCEDURES	6
013100	PROJECT MANAGEMENT AND COORDINATION	10
013200	CONSTRUCTION PROGRESS DOCUMENTATION	8
013233	PHOTOGRAPHIC DOCUMENTATION	4
013300	SUBMITTAL PROCEDURES	12
014000	QUALITY REQUIREMENTS	10
014200	REFERENCES	8
015000	TEMPORARY FACILITIES AND CONTROLS	10
015639	TEMPORARY TREE AND PLANT PROTECTION	10
016000	PRODUCT REQUIREMENTS	6
017300	EXECUTION	10
017419	CONSTRUCTION WASTE MANAGEMENT	8
017700	CLOSEOUT PROCEDURES	8
017823	OPERATION AND MAINTENANCE DATA	8
017839	PROJECT RECORD DOCUMENTS	4
017900	DEMONSTRATION AND TRAINING	6
DIVISION 02 - EXISTING CONDITIONS		
024119	SELECTIVE DEMOLITION	8

NOT FOR BIDDING

DIVISION 03 - CONCRETE
033000 CAST-IN-PLACE CONCRETE 18

DIVISION 04 - MASONRY
042000 UNIT MASONRY 16
044300 STONE MASONRY 14

DIVISION 05 - METALS
051200 STRUCTURAL STEEL FRAMING 8
055000 METAL FABRICATIONS 8
055213 PIPE AND TUBE RAILINGS 8

DIVISION 06 - WOOD, PLASTICS, AND COMPOSITES
061000 ROUGH CARPENTRY 10
061600 SHEATHING 4
061753 SHOP-FABRICATED WOOD TRUSSES 6
062013 EXTERIOR FINISH CARPENTRY 8
062023 INTERIOR FINISH CARPENTRY 10

DIVISION 07 - THERMAL AND MOISTURE PROTECTION
071113 BITUMINOUS DAMPPROOFING 4
072100 THERMAL INSULATION 6
072500 WEATHER BARRIERS 4
073113 ASPHALT SHINGLES 10
074113 METAL ROOF PANELS 16
074646 FIBER-CEMENT SIDING 6
075323 ETHYLENE-PROPYLENE-DIENE MONOMER (EPDM) ROOFING 14
076200 SHEET METAL FLASHING AND TRIM 12
077200 ROOF ACCESSORIES 10
077253 SNOW GUARDS 4
079200 JOINT SEALANTS 12

DIVISION 08 - OPENINGS
082200 FIBERGLASS REINFORCED PLASTIC DOORS AND FRAMES 8
083323 OVERHEAD COILING DOORS 8
083613 SECTIONAL DOORS 8
084113 ALUMINUM-FRAMED ENTRANCES AND STOREFRONTS 14
085413 FIBERGLASS WINDOWS 6
087100 DOOR HARDWARE 14
087113 DOOR HARDWARE SCHEDULE 10
088000 GLAZING 14

DIVISION 09 - FINISHES
092900 GYPSUM BOARD 10
095113 ACOUSTICAL PANEL CEILINGS 10
096513 RESILIENT BASE AND ACCESSORIES 6
096519 RESILIENT TILE FLOORING 6
096723 RESINOUS FLOORING 6

NOT FOR BIDDING

099113	EXTERIOR PAINTING	10
099123	INTERIOR PAINTING	10
099600	HIGH-PERFORMANCE COATINGS	6
DIVISION 10 - SPECIALTIES		
101423	PANEL SIGNAGE	12
102113	TOILET COMPARTMENTS	6
102800	TOILET, BATH, AND LAUNDRY ACCESSORIES	8
104413	FIRE EXTINGUISHER CABINETS	6
104416	FIRE EXTINGUISHERS	4
DIVISION 11 - EQUIPMENT		
114000	FOODSERVICE EQUIPMENT	66
DIVISION 12 - FURNISHINGS		
123661	SIMULATED STONE COUNTERTOPS	4
DIVISION 13 - SPECIAL CONSTRUCTION		
131200	PREFABRICATED STEEL SHADE SHELTERS	18
131500	POOL GENERAL REQUIREMENTS	
131510	FILTER EQUIPMENT	
131520	POOL AND PROCESS PIPING AND VALVES	
131530	POOL CHEMICAL CONTROL EQUIPMENT AND OTHER ACCESSORIES	
131540	PUMPS	
131590	FIBERGLASS WATER SLIDES	
133423.16	FABRICATED CONTROL BOOTHS	8

END OF TABLE OF CONTENTS

NOT FOR BIDDING

(PAGE LEFT BLANK)

NOT FOR BIDDING

SECTION 000115 – LIST OF DRAWINGS

SITE IMPROVEMENTS

CIVIL

C001	COVER SHEET WATERPARK RENOVATIONS
C101	EXISTING CONDITIONS AND DEMOLITION PLAN
C102	EXISTING CONDITIONS AND DEMOLITION PLAN ALTERNATES 1A, 2, 2A, 4 & 4
C201	SITE IMPROVEMENTS BASE BID
C202	SITE IMPROVEMENTS ALTERNATES 1A, 2, 2A, 4 & 4
C301	SITE UTILITY PLAN
C401	GRADING PLAN
C402	GRADING PLAN ALTERNATES 1A, 2, 2A, 4 & 4
C500	SEDIMENT AND STORMWATER MANAGEMENT PLANS
C501	SCHEMATIC CONSTRUCTION SITE STORMWATER MANAGEMENT PLAN
C502	SCHEMATIC POST CONSTRUCTION SITE STORMWATER MANAGEMENT PLAN
C505	SEDIMENT AND STORMWATER MANAGEMENT NOTES & DETAILS
C506	SEDIMENT AND STORMWATER NOTES & DETAILS
C901	GENERAL CONSTRUICTION DETAILS
C902	GENERAL CONSTRUICTION DETAILS
E201	POOL DECK LIGHTING PLAN
E202	POWER SITE PLAN

POOL MECHANICAL BUILDING (BUILDING P)

GENERAL

G001P	COVER SHEET
G101P	LIFE SAFETY PLAN AND CODE PLAN

STRUCTURAL

S001P	STRUCTURAL NOTES
S101P	POOL MECHANICAL PLANS
S501P	TYPICAL DETAILS
S502P	TYPICAL DETAILS

ARCHITECTURAL

A101P	FLOOR PLAN-MECHANICAL BUILDING
A102P	REFLECTED CEILING PLAN & ROOF PLAN
A201P	BUILDING ELEVATIONS
A301P	BUILDING SECTIONS
A302P	WALL SECTIONS
A501P	PLAN AND SECTION DETAILS
A601P	WALL TYPES, DETAILS, SECTIONS AND DOOR SCHEDULE

POOL ARCHITECTURE & POOL MECHANICAL

PA101P	OVERALL POOL AREA PLAN
PA102P	PLUNGE POOL PLAN & SECTIONS
PA103P	RUN-OUT PAD PLAN & DETAILS
PM101P	POOL MECHANICAL SITE PLAN
PM102P	FILTER ROOM PLAN & EQUIPMENT SCHEDULES
PM103P	POOL FILTER & PUMP SCHEMATIC
PM104P	POOL MECHANICAL DETAILS

NOT FOR BIDDING

MECHANICAL

M001P	MECHANICAL SPECIFICATIONS & NOTES
M100P	MECHANICAL FLOOR PLAN

ELECTRICAL

E003P	ELECTRICAL DETAILS
E100P	ELECTRICAL FLOOR PLANS

PLUMBING

P001P	PLUMBING NOTES, LEGEND, AND SCHEDULES
P002P	PLUMBING DETAILS
P100P	PLUMBING FLOOR PLANS

ENTRY AND TICKETING BUILDINGS (BUILDING E - ALTERNATE 2)

GENERAL

G001E	COVER SHEET

STRUCTURAL

S001E	STRUCTURAL NOTES

ARCHITECTURAL

A100E	OVERALL FLOOR PLAN EXISTING BATHHOUSE (ALT# 1B, 2 & 3)
AD101E	DEMOLITION PLAN EXISTING BATHHOUSE (ALT# 3)
AD102E	DEMOLITION PLAN EXISTING BATHHOUSE (ALT# 1B)
A101E	FLOOR PLAN EXISTING BATHHOUSE (ALT# 3)
A102E	FLOOR PLAN EXISTING BATHHOUSE (ALT# 1B)
A103E	FLOOR PLAN TICKETING PAVILION (ALT# 2)
A104E	FLOOR PLAN QUEUE PAVILION (ALT# 2)
A201E	EXTERIOR ELEVATIONS EXISTING BATHHOUSE (ALT# 3)
A301E	BUILDING SECTIONS
A501E	DETAILS

ELECTRICAL

E100E	ELECTRICAL FLOOR PLAN

PLUMBING

P100E	PLUMBING FLOOR PLAN

CONCESSION BUILDING (BUILDING C - ALTERNATE 4)

GENERAL

G001C	COVER SHEET
G101C	LIFE SAFETY PLAN AND CODE PLAN

STRUCTURAL

S001C	STRUCTURAL NOTES
S101C	CONCESSION PLAN
S501C	TYPICAL DETAILS
S502C	DETAILS

ARCHITECTURAL

AD101C	EXISTING CONCESSION STAND DEMOLITION PLAN
A101C	FLOOR PLAN
A102C	CEILING PLAN
A103C	ROOF PLAN
A201C	EXTERIOR ELEVATIONS

NOT FOR BIDDING

A301C	BUILDING SECTIONS
A302C	WALL SECTIONS
A401C	INTERIOR ELEVATION
A501C	DETAILS
A502C	DETAILS
A503C	DETAILS
A601C	DOOR AND FINISH SCHEDULES
A602C	WALL TYPES AND DETAILS

KITCHEN CONSULTANT

K100C	CONCESSIONS EXISTING EQUIPMENT PLAN
K101C	CONCESSIONS EQUIPMENT PLAN
K102C	BUILDING CONDITIONS & VENTILATION PLAN
K103C	PLUMBING ROUGH-IN PLAN
K104C	ELECTRICAL ROUGH-IN PLAN
K105C	UTILITY RACEWAY DETAILS
K106C	VENTILATOR DETAILS
K107C	RACEWAY & VENTILATOR WIRING DIAGRAM
K108C	FABRICATION DETAILS

MECHANICAL

M001C	MECHANICAL SPECIFICATIONS
M002C	MECHANICAL SCHEDULES, LEGEND & DETAILS
M100C	MECHANICAL FLOOR PLAN
M101C	MECHANICAL ROOF PLAN

ELECTRICAL

E003C	ELECTRICAL LEGEND, SCHEDULES AND DETAILS
E100C	ELECTRICAL LIGHTING FLOOR PLAN
E101C	ELECTRICAL POWER FLOOR PLAN
E102C	ELECTRICAL POWER ROOF PLAN

PLUMBING

P001C	PLUMBING NOTES, LEGEND, AND SCHEDULES
P002C	PLUMBING DETAILS
P100C	PLUMBING FLOOR PLANS
P200C	PLUMBING RISER DIAGRAMS

<u>BATHHOUSE BUILDING (BUILDING B - ALTERNATE 5)</u>

GENERAL

G001B	COVER SHEET
G101B	LIFE SAFETY PLAN AND CODE STUDY

STRUCTURAL

S001B	STRUCTURAL NOTES
S101B	BATH HOUSE PLANS
S501B	TYPICAL DETAILS
S502B	DETAILS

ARCHITECTURAL

A101B	FLOOR PLANS
A201B	EXTERIOR ELEVATIONS
A301B	BUILDING SECTIONS
A302B	WALL SECTIONS
A303B	WALL SECTIONS
A401B	INTERIOR ELEVATIONS
A501B	DETAILS

NOT FOR BIDDING

A502B	DETAILS
A601B	DOOR AND FINISH SCHEDULES

MECHANICAL

M001B	MECHANICAL SPECIFICATIONS
M100B	MECHANICAL FLOOR PLAN

ELECTRICAL

E003B	ELECTRICAL LEGEND, SCHEDULES AND DETAILS
E100B	ELECTRICAL LIGHTING AND POWER FLOOR PLAN

PLUMBING

P001B	PLUMBING NOTES, LEGEND, AND SCHEDULES
P002B	PLUMBING DETAILS
P100B	PLUMBING FLOOR PLANS
P200B	PLUMBING RISER DIAGRAM

END OF SECTION 000115

NOT FOR BIDDING

INVITATION TO BID

Sealed bids for the Killens Pond Waterpark Renovations – Phase 1 at the Killens Pond State Park, in Kent County, Delaware will be received by the State of Delaware, Department of Natural Resources and Environmental Control, Division of Parks and Recreations, at the reception area of the Department of Natural Resources and Environmental Control, Division of Parks and Recreations, 89 Kings Hwy., Dover, DE 19901 until 3:00 pm local time on Tuesday, September 22, 2015, at which time they will be publicly opened and read aloud in the Conference Room. Bidder bears the risk of late delivery. Any bids received after the stated time will be returned unopened.

Project involves site clearing, excavation, grading, fill and compaction, underground utilities, renovations to the existing main entrance building and new buildings for the pool mechanical equipment, concession building and bathhouse building, and new pool equipment and slides and splash pools.

A **MANDATORY** Pre-Bid Meeting will be held on Tuesday, September 8, 2015, at 10:00 am local time, at Killens Pond Water Park, Killens Pond State Park, Felton, DE for the purpose of establishing the listing of subcontractors and to answer questions. Representatives of each party to any Joint Venture must attend this meeting. **ATTENDANCE OF THIS MEETING IS A PREREQUISITE FOR BIDDING ON THIS CONTRACT.**

Sealed bids shall be addressed to the Department of Natural Resources and Environmental Control, Division of Parks and Recreations, 89 Kings Hwy., Dover, DE 19901, Attn: Kevin Rychlicki.
The outer envelope should clearly indicate: **"KILLENS POND WATERPARK RENOVATIONS – PHASE 1" - SEALED BID - DO NOT OPEN."**

Electronic copies of the Contract Documents may be obtained at DNRDC, 89 Kings Hwy, Dover, DE 19901, (302) 739-9210 upon payment of $20.00 per disc/non-refundable. Please call in advance to insure documents are available. Checks are payable to Division of Parks and Recreation.

Construction documents will be available for review at the following locations: Becker Morgan Group, Inc.; Delaware Contractors Association and Associated Builders and Contractors.

Bidders will not be subject to discrimination on the basis of race, creed, color, sex, sexual orientation, gender identity or national origin in consideration of this award, and Minority Business Enterprises, Disadvantaged Business Enterprises, Women-Owned Business Enterprises and Veteran-Owned Business Enterprises will be afforded full opportunity to submit bids on this contract. Each bid must be accompanied by a bid security equivalent to ten percent of the bid amount and all additive alternates. The successful bidder must post a performance bond and payment bond in a sum equal to 100 percent of the contract price upon execution of the contract. The Owner reserves the right to reject any or all bids and to waive any informalities therein. The Owner may extend the time and place for the opening of the bids from that described in the advertisement with not less than two calendar days notice by certified delivery, facsimile machine or other electronic means to those bidders receiving plans.

NOT FOR BIDDING

(PAGE LEFT BLANK)

NOT FOR BIDDING

INSTRUCTIONS TO BIDDERS

TABLE OF ARTICLES

1. DEFINITIONS

2. BIDDER'S REPRESENTATION

3. BIDDING DOCUMENTS

4. BIDDING PROCEDURES

5. CONSIDERATION OF BIDS

6. POST-BID INFORMATION

7. PERFORMANCE BOND AND PAYMENT BOND

8. FORM OF AGREEMENT BETWEEN OWNER AND CONTRACTOR

NOT FOR BIDDING

ARTICLE 1: GENERAL

1.1 DEFINITIONS

1.1.1 Whenever the following terms are used, their intent and meaning shall be interpreted as follows:

1.2 STATE: The State of Delaware.

1.3 AGENCY: Contracting State Agency as noted on cover sheet.

1.4 DESIGNATED OFFICIAL: The agent authorized to act for the Agency.

1.5 BIDDING DOCUMENTS: Bidding Documents include the Bidding Requirements and the proposed Contract Documents. The Bidding Requirements consist of the Advertisement for Bid, Invitation to Bid, Instructions to Bidders, Supplementary Instructions to Bidders (if any), General Conditions, Supplementary General Conditions, General Requirements, Special Provisions (if any), the Bid Form (including the Non-collusion Statement), and other sample bidding and contract forms. The proposed Contract Documents consist of the form of Agreement between the Owner and Contractor, as well as the Drawings, Specifications (Project Manual) and all Addenda issued prior to execution of the Contract.

1.6 CONTRACT DOCUMENTS: The Contract Documents consist of the, Instructions to Bidders, Supplementary Instructions to Bidders (if any), General Conditions, Supplementary General Conditions, General Requirements, Special Provisions (if any), the form of agreement between the Owner and the Contractor, Drawings (if any), Specifications (Project Manual), and all addenda.

1.7 AGREEMENT: The form of the Agreement shall be AIA Document A101, Standard Form of Agreement between Owner and Contractor where the basis of payment is a STIPULATED SUM. In the case of conflict between the instructions contained therein and the General Requirements herein, these General Requirements shall prevail.

1.8 GENERAL REQUIREMENTS (or CONDITIONS): General Requirements (or conditions) are instructions pertaining to the Bidding Documents and to contracts in general. They contain, in summary, requirements of laws of the State; policies of the Agency and instructions to bidders.

1.9 SPECIAL PROVISIONS: Special Provisions are specific conditions or requirements peculiar to the bidding documents and to the contract under consideration and are supplemental to the General Requirements. Should the Special Provisions conflict with the General Requirements, the Special Provisions shall prevail.

1.10 ADDENDA: Written or graphic instruments issued by the Owner/Architect prior to the execution of the contract which modify or interpret the Bidding Documents by additions, deletions, clarifications or corrections.

1.11 BIDDER OR VENDOR: A person or entity who formally submits a Bid for the material or Work contemplated, acting directly or through a duly authorized representative who meets the requirements set forth in the Bidding Documents.

1.12 SUB-BIDDER: A person or entity who submits a Bid to a Bidder for materials or labor, or both for a portion of the Work.

1.13 BID: A complete and properly executed proposal to do the Work for the sums stipulated therein, submitted in accordance with the Bidding Documents.

NOT FOR BIDDING

1.14 BASE BID: The sum stated in the Bid for which the Bidder offers to perform the Work described in the Bidding Documents as the base, to which Work may be added or from which Work may be deleted for sums stated in Alternate Bids (if any are required to be stated in the bid).

1.15 ALTERNATE BID (or ALTERNATE): An amount stated in the Bid, where applicable, to be added to or deducted from the amount of the Base Bid if the corresponding change in the Work, as described in the Bidding Documents is accepted.

1.16 UNIT PRICE: An amount stated in the Bid, where applicable, as a price per unit of measurement for materials, equipment or services or a portion of the Work as described in the Bidding Documents.

1.17 SURETY: The corporate body which is bound with and for the Contract, or which is liable, and which engages to be responsible for the Contractor's payments of all debts pertaining to and for his acceptable performance of the Work for which he has contracted.

1.18 BIDDER'S DEPOSIT: The security designated in the Bid to be furnished by the Bidder as a guaranty of good faith to enter into a contract with the Agency if the Work to be performed or the material or equipment to be furnished is awarded to him.

1.19 CONTRACT: The written agreement covering the furnishing and delivery of material or work to be performed.

1.20 CONTRACTOR: Any individual, firm or corporation with whom a contract is made by the Agency.

1.21 SUBCONTRACTOR: An individual, partnership or corporation which has a direct contract with a contractor to furnish labor and materials at the job site, or to perform construction labor and furnish material in connection with such labor at the job site.

1.22 CONTRACT BOND: The approved form of security furnished by the contractor and his surety as a guaranty of good faith on the part of the contractor to execute the work in accordance with the terms of the contract.

ARTICLE 2: BIDDER'S REPRESENTATIONS

2.1 PRE-BID MEETING

2.1.1 A pre-bid meeting for this project will be held at the time and place designated. Attendance at this meeting is a pre-requisite for submitting a Bid, unless this requirement is specifically waived elsewhere in the Bid Documents.

2.2 By submitting a Bid, the Bidder represents that:

2.2.1 The Bidder has read and understands the Bidding Documents and that the Bid is made in accordance therewith.

2.2.2 The Bidder has visited the site, become familiar with existing conditions under which the Work is to be performed, and has correlated the Bidder's his personal observations with the requirements of the proposed Contract Documents.

2.2.3 The Bid is based upon the materials, equipment, and systems required by the Bidding Documents without exception.

NOT FOR BIDDING

2.3 JOINT VENTURE REQUIREMENTS

2.3.1 For Public Works Contracts, each Joint Venturer shall be qualified and capable to complete the Work with their own forces.

2.3.2 Included with the Bid submission, and as a requirement to bid, a copy of the executed Joint Venture Agreement shall be submitted and signed by all Joint Venturers involved.

2.3.3 All required Bid Bonds, Performance Bonds, Material and Labor Payment Bonds must be executed by both Joint Venturers and be placed in both of their names.

2.3.4 All required insurance certificates shall name both Joint Venturers.

2.3.5 Both Joint Venturers shall sign the Bid Form and shall submit a copy of a valid Delaware Business License with their Bid.

2.3.6 Both Joint Venturers shall include their Federal E.I. Number with the Bid.

2.3.7 In the event of a mandatory Pre-bid Meeting, each Joint Venturer shall have a representative in attendance.

2.3.8 Due to exceptional circumstances and for good cause shown, one or more of these provisions may be waived at the discretion of the State.

2.4 ASSIGNMENT OF ANTITRUST CLAIMS

2.4.1 As consideration for the award and execution by the Owner of this contract, the Contractor hereby grants, conveys, sells, assigns and transfers to the State of Delaware all of its right, title and interests in and to all known or unknown causes of action it presently has or may now or hereafter acquire under the antitrust laws of the United States and the State of Delaware, relating to the particular goods or services purchased or acquired by the Owner pursuant to this contract.

ARTICLE 3: BIDDING DOCUMENTS

3.1 COPIES OF BID DOCUMENTS

3.1.1 Bidders may obtain complete sets of the Bidding Documents from the Architectural/Engineering firm designated in the Advertisement or Invitation to Bid in the number and for the deposit sum, if any, stated therein.

3.1.2 Bidders shall use complete sets of Bidding Documents for preparation of Bids. The issuing Agency nor the Architect assumes no responsibility for errors or misinterpretations resulting from the use of incomplete sets of Bidding Documents.

3.1.3 Any errors, inconsistencies or omissions discovered shall be reported to the Architect immediately.

3.1.4 The Agency and Architect may make copies of the Bidding Documents available on the above terms for the purpose of obtaining Bids on the Work. No license or grant of use is conferred by issuance of copies of the Bidding Documents.

NOT FOR BIDDING

3.2 INTERPRETATION OR CORRECTION OF BIDDING DOCUMENTS

3.2.1 The Bidder shall carefully study and compare the Bidding Documents with each other, and with other work being bid concurrently or presently under construction to the extent that it relates to the Work for which the Bid is submitted, shall examine the site and local conditions, and shall report any errors, inconsistencies, or ambiguities discovered to the Architect.

3.2.2 Bidders or Sub-bidders requiring clarification or interpretation of the Bidding Documents shall make a written request to the Architect at least seven days prior to the date for receipt of Bids. Interpretations, corrections and changes to the Bidding Documents will be made by written Addendum. Interpretations, corrections, or changes to the Bidding Documents made in any other manner shall not be binding.

3.2.3 The apparent silence of the specifications as to any detail, or the apparent omission from it of detailed description concerning any point, shall be regarded as meaning that only the best commercial practice is to prevail and only material and workmanship of the first quality are to be used. Proof of specification compliance will be the responsibility of the Bidder.

3.2.4 Unless otherwise provided in the Contract Documents the Contractor shall provide and pay for all permits, labor, materials, equipment, tools, construction equipment and machinery, water, heat, utilities, transportation, and other facilities and services necessary for the proper execution and completion of the Work.

3.2.5 The Owner will bear the costs for all impact and user fees associated with the project.

3.3 SUBSTITUTIONS

3.3.1 The materials, products and equipment described in the Bidding Documents establish a standard of quality, required function, dimension, and appearance to be met by any proposed substitution. The specification of a particular manufacturer or model number is not intended to be proprietary in any way. Substitutions of products for those named will be considered, providing that the Vendor certifies that the function, quality, and performance characteristics of the material offered is equal or superior to that specified. It shall be the Bidder's responsibility to assure that the proposed substitution will not affect the intent of the design, and to make any installation modifications required to accommodate the substitution.

3.3.2 Requests for substitutions shall be made in writing to the Architect at least ten days prior to the date of the Bid Opening. Such requests shall include a complete description of the proposed substitution, drawings, performance and test data, explanation of required installation modifications due the substitution, and any other information necessary for an evaluation. The burden of proof of the merit of the proposed substitution is upon the proposer. The Architect's decision of approval or disapproval shall be final. The Architect is to notify Owner prior to any approvals.

3.3.3 If the Architect approves a substitution prior to the receipt of Bids, such approval shall be set forth in an Addendum. Approvals made in any other manner shall not be binding.

3.3.4 The Architect shall have no obligation to consider any substitutions after the Contract award.

3.4 ADDENDA

3.4.1 Addenda will be mailed or delivered to all who are known by the Architect to have received a complete set of the Bidding Documents.

NOT FOR BIDDING

3.4.2 Copies of Addenda will be made available for inspection wherever Bidding Documents are on file for that purpose.

3.4.3 No Addenda will be issued later than 4 days prior to the date for receipt of Bids except an Addendum withdrawing the request for Bids or one which extends the time or changes the location for the opening of bids.

3.4.4 Each bidder shall ascertain prior to submitting his Bid that they have received all Addenda issued, and shall acknowledge their receipt in their Bid in the appropriate space. Not acknowledging an issued Addenda could be grounds for determining a bid to be non-responsive.

ARTICLE 4: BIDDING PROCEDURES

4.1 PREPARATION OF BIDS

4.1.1 Submit the bids on the Bid Forms included with the Bidding Documents.

4.1.2 Submit the original Bid Form for each bid. Bid Forms may be removed from the project manual for this purpose.

4.1.3 Execute all blanks on the Bid Form in a non-erasable medium (typewriter or manually in ink).

4.1.4 Where so indicated by the makeup of the Bid Form, express sums in both words and figures, in case of discrepancy between the two the written amount shall govern.

4.1.5 Interlineations, alterations or erasures must be initialed by the signer of the Bid.

4.1.6 BID ALL REQUESTED ALTERNATES AND UNIT PRICES, IF ANY. If there is no change in the Base Bid for an Alternate, enter "No Change". The Contractor is responsible for verifying that they have received all addenda issued during the bidding period. Work required by Addenda shall automatically become part of the Contract.

4.1.7 Make no additional stipulations on the Bid Form and do not qualify the Bid in any other manner.

4.1.8 Each copy of the Bid shall include the legal name of the Bidder and a statement whether the Bidder is a sole proprietor, a partnership, a corporation, or any legal entity, and each copy shall be signed by the person or persons legally authorized to bind the Bidder to a contract. A Bid by a corporation shall further give the state of incorporation and have the corporate seal affixed. A Bid submitted by an agent shall have a current Power of Attorney attached, certifying agent's authority to bind the Bidder.

4.1.9 Bidder shall complete the Non-Collusion Statement form included with the Bid Forms and include it with their Bid.

4.1.10 In the construction of all Public Works projects for the State of Delaware or any agency thereof, preference in employment of laborers, workers or mechanics shall be given to bona fide legal citizens of the State who have established citizenship by residence of at least 90 days in the State.

4.1.11 Each Bidder shall include in their bid a copy of a valid Delaware Business License.

NOT FOR BIDDING

4.2 BID SECURITY

4.2.1 All bids shall be accompanied by a deposit of either a good and sufficient bond to the agency for the benefit of the agency, with corporate surety authorized to do business in this State, the form of the bond and the surety to be approved by the agency, or a security of the bidder assigned to the agency, for a sum equal to at least 10% of the bid plus all add alternates, or in lieu of the bid bond a security deposit in the form of a certified check, bank treasurer's check, cashier's check, money order, or other prior approved secured deposit assigned to the State. The bid bond need not be for a specific sum, but may be stated to be for a sum equal to 10% of the bid plus all add alternates to which it relates and not to exceed a certain stated sum, if said sum is equal to at least 10% of the bid. The Bid Bond form used shall be the standard OMB form (attached).

4.2.2 The Agency has the right to retain the bid security of Bidders to whom an award is being considered until either a formal contract has been executed and bonds have been furnished or the specified time has elapsed so the Bids may be withdrawn or all Bids have been rejected.

4.2.3 In the event of any successful Bidder refusing or neglecting to execute a formal contract and bond within 20 days of the awarding of the contract, the bid bond or security deposited by the successful bidder shall be forfeited.

4.3 SUBCONTRACTOR LIST

4.3.1 As required by Delaware Code, Title 29, section 6962(d)(10)b, each Bidder shall submit with their Bid a completed List of Sub-Contractors included with the Bid Form. NAME ONLY ONE SUBCONTRACTOR FOR EACH TRADE. A Bid will be considered non-responsive unless the completed list is included.

4.3.2 Provide the Name and Address for each listed subcontractor. Addresses by City, Town or Locality, plus State, will be acceptable.

4.3.3 It is the responsibility of the Contractor to ensure that their Subcontractors are in compliance with the provisions of this law. Also, if a Contractor elects to list themselves as a Subcontractor for any category, they must specifically name themselves on the Bid Form and be able to document their capability to act as Subcontractor in that category in accordance with this law.

4.4 EQUALITY OF EMPLOYMENT OPPORTUNITY ON PUBLIC WORKS

4.4.1 During the performance of this contract, the contractor agrees as follows:

A. The Contractor will not discriminate against any employee or applicant for employment because of race, creed, sex, color, sexual orientation, gender identity or national origin. The Contractor will take affirmative action to ensure the applicants are employed, and that employees are treated during employment, without regard to their race, creed, sex, color, sexual orientation, gender identity or national origin. Such action shall include, but not be limited to, the following: Employment, upgrading, demotion or transfer; recruitment or recruitment advertising; layoff or termination; rates of pay or other forms of compensation; and selection for training, including apprenticeship. The Contractor agrees to post in conspicuous places available to employees and applicants for employment notices to be provided by the contracting agency setting forth this nondiscrimination clause.

NOT FOR BIDDING

B. The Contractor will, in all solicitations or advertisements for employees placed by or on behalf of the Contractor, state that all qualified applicants will receive consideration for employment without regard to race, creed, sex, color, sexual orientation, gender identity or national origin."

4.5 PREVAILING WAGE REQUIREMENT

4.5.1 Wage Provisions: In accordance with Delaware Code, Title 29, Section 6960, renovation projects whose total cost shall exceed $15,000, and $100,000 for new construction, the minimum wage rates for various classes of laborers and mechanics shall be as determined by the Department of Labor, Division of Industrial Affairs of the State of Delaware.

4.5.2 The prevailing wage shall be the wage paid to a majority of employees performing similar work as reported in the Department's annual prevailing wage survey or in the absence of a majority, the average paid to all employees reported.

4.5.3 The employer shall pay all mechanics and laborers employed directly upon the site of work, unconditionally and not less often than once a week and without subsequent deduction or rebate on any account, the full amounts accrued at time of payment, computed at wage rates not less than those stated in the specifications, regardless of any contractual relationship which may be alleged to exist between the employer and such laborers and mechanics.

4.5.4 The scale of the wages to be paid shall be posted by the employer in a prominent and easily accessible place at the site of the work.

4.5.5 Every contract based upon these specifications shall contain a stipulation that sworn payroll information, as required by the Department of Labor, be furnished weekly. The Department of Labor shall keep and maintain the sworn payroll information for a period of 6 months from the last day of the work week covered by the payroll.

4.6 SUBMISSION OF BIDS

4.6.1 Enclose the Bid, the Bid Security, and any other documents required to be submitted with the Bid in a sealed opaque envelope. Address the envelope to the party receiving the Bids. Identify with the project name, project number, and the Bidder's name and address. If the Bid is sent by mail, enclose the sealed envelope in a separate mailing envelope with the notation "BID ENCLOSED" on the face thereof. The State is not responsible for the opening of bids prior to bid opening date and time that are not properly marked.

4.6.2 Deposit Bids at the designated location prior to the time and date for receipt of bids indicated in the Advertisement for Bids. Bids received after the time and date for receipt of bids will be marked "LATE BID" and returned.

4.6.3 Bidder assumes full responsibility for timely delivery at location designated for receipt of bids.

4.6.4 Oral, telephonic or telegraphic bids are invalid and will not receive consideration.

4.6.5 Withdrawn Bids may be resubmitted up to the date and time designated for the receipt of Bids, provided that they are then fully in compliance with these Instructions to Bidders.

NOT FOR BIDDING

4.7 MODIFICATION OR WITHDRAW OF BIDS

4.7.1 Prior to the closing date for receipt of Bids, a Bidder may withdraw a Bid by personal request and by showing proper identification to the Architect. A request for withdraw by letter or fax, if the Architect is notified in writing prior to receipt of fax, is acceptable. A fax directing a modification in the bid price will render the Bid informal, causing it to be ineligible for consideration of award. Telephone directives for modification of the bid price shall not be permitted and will have no bearing on the submitted proposal in any manner.

4.7.2 Bidders submitting Bids that are late shall be notified as soon as practicable and the bid shall be returned.

4.7.3 A Bid may not be modified, withdrawn or canceled by the Bidder during a thirty (30) day period following the time and date designated for the receipt and opening of Bids, and Bidder so agrees in submitting their Bid. Bids shall be binding for 30 days after the date of the Bid opening.

ARTICLE 5: CONSIDERATION OF BIDS

5.1 OPENING/REJECTION OF BIDS

5.1.1 Unless otherwise stated, Bids received on time will be publicly opened and will be read aloud. An abstract of the Bids will be made available to Bidders.

5.1.2 The Agency shall have the right to reject any and all Bids. A Bid not accompanied by a required Bid Security or by other data required by the Bidding Documents, or a Bid which is in any way incomplete or irregular is subject to rejection.

5.1.3 If the Bids are rejected, it will be done within thirty (30) calendar day of the Bid opening.

5.2 COMPARISON OF BIDS

5.2.1 After the Bids have been opened and read, the bid prices will be compared and the result of such comparisons will be made available to the public. Comparisons of the Bids may be based on the Base Bid plus desired Alternates. The Agency shall have the right to accept Alternates in any order or combination.

5.2.2 The Agency reserves the right to waive technicalities, to reject any or all Bids, or any portion thereof, to advertise for new Bids, to proceed to do the Work otherwise, or to abandon the Work, if in the judgment of the Agency or its agent(s), it is in the best interest of the State.

5.2.3 An increase or decrease in the quantity for any item is not sufficient grounds for an increase or decrease in the Unit Price.

5.2.4 The prices quoted are to be those for which the material will be furnished F.O.B. Job Site and include all charges that may be imposed during the period of the Contract.

5.2.5 No qualifying letter or statements in or attached to the Bid, or separate discounts will be considered in determining the low Bid except as may be otherwise herein noted. Cash or separate discounts should be computed and incorporated into Unit Bid Price(s).

5.3 DISQUALIFICATION OF BIDDERS

5.3.1 An agency shall determine that each Bidder on any Public Works Contract is responsible before awarding the Contract. Factors to be considered in determining the responsibility of a Bidder include:

NOT FOR BIDDING

A. The Bidder's financial, physical, personnel or other resources including Subcontracts;

B. The Bidder's record of performance on past public or private construction projects, including, but not limited to, defaults and/or final adjudication or admission of violations of the Prevailing Wage Laws in Delaware or any other state;

C. The Bidder's written safety plan;

D. Whether the Bidder is qualified legally to contract with the State;

E. Whether the Bidder supplied all necessary information concerning its responsibility; and,

F. Any other specific criteria for a particular procurement, which an agency may establish; provided however, that, the criteria be set forth in the Invitation to Bid and is otherwise in conformity with State and/or Federal law.

5.3.2 If an agency determines that a Bidder is nonresponsive and/or nonresponsible, the determination shall be in writing and set forth the basis for the determination. A copy of the determination shall be sent to the affected Bidder within five (5) working days of said determination.

5.3.3 In addition, any one or more of the following causes may be considered as sufficient for the disqualification of a Bidder and the rejection of their Bid or Bids.

5.3.3.1 More than one Bid for the same Contract from an individual, firm or corporation under the same or different names.

5.3.3.2 Evidence of collusion among Bidders.

5.3.3.3 Unsatisfactory performance record as evidenced by past experience.

5.3.3.4 If the Unit Prices are obviously unbalanced either in excess or below reasonable cost analysis values.

5.3.3.5 If there are any unauthorized additions, interlineation, conditional or alternate bids or irregularities of any kind which may tend to make the Bid incomplete, indefinite or ambiguous as to its meaning.

5.3.3.6 If the Bid is not accompanied by the required Bid Security and other data required by the Bidding Documents.

5.3.3.7 If any exceptions or qualifications of the Bid are noted on the Bid Form.

5.4 ACCEPTANCE OF BID AND AWARD OF CONTRACT

5.4.1 A formal Contract shall be executed with the successful Bidder within twenty (20) calendar days after the award of the Contract.

5.4.2 Per Section 6962(d)(13) a., Title 29, Delaware Code, "The contracting agency shall award any public works contract within thirty (30) days of the bid opening to the lowest responsive and responsible Bidder, unless the Agency elects to award on the basis of best value, in which case the election to award on the basis of best value shall be stated in the Invitation To Bid."

NOT FOR BIDDING

5.4.3 Each Bid on any Public Works Contract must be deemed responsive by the Agency to be considered for award. A responsive Bid shall conform in all material respects to the requirements and criteria set forth in the Contract Documents and specifications.

5.4.4 The Agency shall have the right to accept Alternates in any order or combination, and to determine the low Bidder on the basis of the sum of the Base Bid, plus accepted Alternates.

5.4.5 The successful Bidder shall execute a formal contract, submit the required Insurance Certificate, and furnish good and sufficient bonds, unless specifically waived in the General Requirements, in accordance with the General Requirement, within fourteen (14) days of official notice of contract award. Bonds shall be for the benefit of the Agency with surety in the amount of 100% of the total contract award. Said Bonds shall be conditioned upon the faithful performance of the contract. Bonds shall remain in affect for period of one year after the date of substantial completion.

5.4.6 If the successful Bidder fails to execute the required Contract and Bond, as aforesaid, within fourteen (14) calendar days after the date of official Notice of the Award of the Contract, their Bid guaranty shall immediately be taken and become the property of the State for the benefit of the Agency as liquidated damages, and not as a forfeiture or as a penalty. Award will then be made to the next lowest qualified Bidder of the Work or readvertised, as the Agency may decide.

5.4.7 Each bidder shall supply with its bid its taxpayer identification number (i.e., federal employer identification number or social security number) and a copy of its Delaware business license, and should the vendor be awarded a contract, such vendor shall provide to the agency the taxpayer identification license numbers of such subcontractors. Such numbers shall be provided on the later of the date on which such subcontractor is required to be identified or the time the contract is executed. The successful Bidder shall provide to the agency to which it is contracting, within 30 days of entering into such public works contract, copies of all Delaware Business licenses of subcontractors and/or independent contractors that will perform work for such public works contract. However, if a subcontractor or independent contractor is hired or contracted more than 20 days after the Bidder entered the public works contract the Delaware Business license of such subcontractor or independent contractor shall be provided to the agency within 10 days of being contracted or hired.

5.4.8 The Bid Security shall be returned to the successful Bidder upon the execution of the formal contract. The Bid Securities of unsuccessful bidders shall be returned within thirty (30) calendar days after the opening of the Bids.

ARTICLE 6: POST-BID INFORMATION

6.1 CONTRACTOR'S QUALIFICATION STATEMENT

6.1.1 Bidders to whom award of a Contract is under consideration shall, if requested by the Agency, submit a properly executed AIA Document A305, Contractor's Qualification Statement, unless such a statement has been previously required and submitted.

6.2 BUSINESS DESIGNATION FORM

6.2.1 Successful bidder shall be required to accurately complete an Office of Management and Budget Business Designation Form for Subcontractors.

NOT FOR BIDDING

ARTICLE 7: PERFORMANCE BOND AND PAYMENT BOND

7.1 BOND REQUIREMENTS

7.1.1 The cost of furnishing the required Bonds, that are stipulated in the Bidding Documents, shall be included in the Bid.

7.1.2 If the Bidder is required by the Agency to secure a bond from other than the Bidder's usual sources, changes in cost will be adjusted as provide in the Contract Documents.

7.1.3 The Performance and Payment Bond forms used shall be the standard OMB forms (attached).

7.2 TIME OF DELIVERY AND FORM OF BONDS

7.2.1 The bonds shall be dated on or after the date of the Contract.

7.2.2 The Bidder shall require the attorney-in-fact who executes the required bonds on behalf of the surety to affix a certified and current copy of the power of attorney.

ARTICLE 8: FORM OF AGREEMENT BETWEEN AGENCY AND CONTRACTOR

8.1 Unless otherwise required in the Bidding Documents, the Agreement for the Work will be written on AIA Document A101, Standard Form of Agreement Between Owner and Contractor Where the Basis of Payment is a Stipulated Sum.

END OF INSTRUCTIONS TO BIDDERS

NOT FOR BIDDING

DOCUMENT 003132 - GEOTECHNICAL DATA

1.1 GEOTECHNICAL DATA

A. This Document with its referenced attachments is part of the Procurement and Contracting Requirements for Project. They provide Owner's information for Bidders' convenience and are intended to supplement rather than serve in lieu of Bidders' own investigations. They are made available for Bidders' convenience and information, but are not a warranty of existing conditions. This Document and its attachments are not part of the Contract Documents.

B. A geotechnical investigation report for Project, prepared by Hillis-Carnes Engineering Associates, Inc., dated June 30, 2015, is available for viewing as appended to this Document.

C. RelatedRequirements:

1. Document 002113 "Instructions to Bidders" for the Bidder's responsibilities for examination of Project site and existing conditions.
2. Document 003119 "Existing Condition Information" for information about existing conditions that is made available to bidders.

END OF DOCUMENT 003132

NOT FOR BIDDING

(PAGE LEFT BLANK)

NOT FOR BIDDING

KILLENS POND WATERPARK RENOVATIONS – PHASE 1
KILLENS POND STATE PARK, KENT COUNTY, DELAWARE
DNREC PROJECT NO. KP-24 – CONTRACT # 2015-KP-100

BID FORM

For Bids Due: _____(DATE)_____ **To:** _____(OWNER)_____
_____
_____
_____
_____

Name of Bidder: _____

Delaware Business License No.: _____ **Taxpayer ID No.:** _____
(A copy of Bidder's Delaware Business License must be attached to this form.)

(Other License Nos.): _____

Phone No.: ( ) _____ - _____ **Fax No.: ( ) _____ - _____**

The undersigned, representing that he has read and understands the Bidding Documents and that this bid is made in accordance therewith, that he has visited the site and has familiarized himself with the local conditions under which the Work is to be performed, and that his bid is based upon the materials, systems and equipment described in the Bidding Documents without exception, hereby proposes and agrees to provide all labor, materials, plant, equipment, supplies, transport and other facilities required to execute the work described by the aforesaid documents for the lump sum itemized below:

$_____
($)

ALTERNATES

Alternate prices conform to applicable project specification section. Refer to specifications for a complete description of the following Alternates. An "ADD" or "DEDUCT" amount is indicated by the crossed out part that does not apply.

ALTERNATE No. 1: New Pool Equipment Building Roofing

Add/Deduct: _____
($)

ALTERNATE No. 1A: Pool Speed Slide

Add/Deduct: _____
($)

ALTERNATE No. 1B: Existing Waterpark Entrance Building toilet room renovations

Add/Deduct: _____
($)

NOT FOR BIDDING

KILLENS POND WATERPARK RENOVATIONS – PHASE 1
KILLENS POND STATE PARK, KENT COUNTY, DELAWARE
DNREC PROJECT NO. KP-24 – CONTRACT # 2015-KP-100

BID FORM

ALTERNATE No. 2: New Waterpark Entrance Plaza

Add/Deduct: _____
($)

ALTERNATE No. 2A: New Waterpark Entrance Plaza Queuing Pavilion.

Add/Deduct: _____
($)

ALTERNATE No. 2B: New Waterpark Entrance Plaza Ticketing Pavilion

Add/Deduct: _____
($)

ALTERNATE No. 3: Existing Waterpark Entrance Building renovations

Add/Deduct: _____
($)

ALTERNATE No. 4: New Concession/Retail Building

Add/Deduct: _____
($)

ALTERNATE No. 4A: New Concession/Retail Building Roofing

Add/Deduct: _____
($)

ALTERNATE No. 5: New Restroom Building

Add/Deduct: _____
($)

ALTERNATE No. 5A: New Concession/Retail Building Roofing

Add/Deduct: _____
($)

NOT FOR BIDDING

KILLENS POND WATERPARK RENOVATIONS – PHASE 1
KILLENS POND STATE PARK, KENT COUNTY, DELAWARE
DNREC PROJECT NO. KP-24 – CONTRACT # 2015-KP-100

BID FORM

UNIT PRICES

Unit prices conform to applicable project specification section. Refer to the specifications for a complete description of the following Unit Prices:

	ADD	DEDUCT
UNIT PRICE No. 1: Unsatisfactory soil	$ _____	$ _____
\ UNIT PRICE No. 2: Cutting and patching of concrete slabs and decking	$ _____	$ _____
UNIT PRICE No. 3: Additional concrete pool deck	$ _____	$ _____
UNIT PRICE No. 4: Concrete pool deck coating	$ _____	$ _____
UNIT PRICE No. 5: Concrete foundations for pre-fab steel shade structures	$ _____	$ _____

NOT FOR BIDDING

KILLENS POND WATERPARK RENOVATIONS – PHASE 1
KILLENS POND STATE PARK, KENT COUNTY, DELAWARE
DNREC PROJECT NO. KP-24 – CONTRACT # 2015-KP-100

BID FORM

I/We acknowledge Addendums numbered _____ and the price(s) submitted include any cost/schedule impact they may have.

This bid shall remain valid and cannot be withdrawn for thirty (30) days from the date of opening of bids (60 days for School Districts and Department of Education), and the undersigned shall abide by the Bid Security forfeiture provisions. Bid Security is attached to this Bid.

The Owner shall have the right to reject any or all bids, and to waive any informalities or irregularity in any bid received.

This bid is based upon work being accomplished by the Sub-Contractors named on the list attached to this bid.

Should I/We be awarded this contract, I/We pledge to achieve substantial completion of all of the work associated with the new poll slides to have the new pool slides fully operational, inspected, and read to open to the public by May 27, 2016.

The undersigned represents and warrants that he has complied and shall comply with all requirements of local, state, and national laws; that no legal requirement has been or shall be violated in making or accepting this bid, in awarding the contract to him or in the prosecution of the work required; that the bid is legal and firm; that he has not, directly or indirectly, entered into any agreement, participated in any collusion, or otherwise taken action in restraint of free competitive bidding.

Upon receipt of written notice of the acceptance of this Bid, the Bidder shall, within twenty (20) calendar days, execute the agreement in the required form and deliver the Contract Bonds, and Insurance Certificates, required by the Contract Documents.

I am / We are an Individual / a Partnership / a Corporation

By _____ Trading as _____
(Individual's / General Partner's / Corporate Name)

_____
(State of Corporation)

Business Address:_____
_____
_____
_____

Witness: _____ **By:** _____
(Authorized Signature)

(SEAL)

_____
(Title)

Date: _____

ATTACHMENTS

Sub-Contractor List
Non-Collusion Statement
Bid Security
(Others as Required by Project Manuals)

NOT FOR BIDDING

KILLENS POND WATERPARK RENOVATIONS – PHASE 1
KILLENS POND STATE PARK, KENT COUNTY, DELAWARE
DNREC PROJECT NO. KP-24 – CONTRACT # 2015-KP-100

BID FORM

NOT FOR BIDDING

SUBCONTRACTOR LIST

In accordance with Title 29, Chapter 6962 (d)(10)b Delaware Code, the following sub-contractor listing must accompany the bid submittal. The name and address of the sub-contractor **must be listed for each category** where the bidder intends to use a sub-contractor to perform that category of work. In order to provide full disclosure and acceptance of the bid by the *Owner*, **it is required that bidders list themselves as being the sub-contractor for all categories where he/she is qualified and intends to perform such work.**

Subcontractor Category		Subcontractor	Address (City & State)	Subcontractors tax payer ID # or Delaware Business license #
1.	Sitework			
2.	Concrete			
3.	Masonry			
4.	Carpentry			
5.	Roofing			
6.	Doors, Frames & Hardware			
7.	Windows			
8.	Gypsum Drywall			
9.	Toilet Partitions/Access.			
10.	Plumbing			
7.	Electrical			
9.	Pool Slides			
10.	Food Service Equipment			
11.	Shade Shelters (Pavilions)			
12.	Pre-Fab Ticket Booth			

KILLENS POND WATERPARK RENOVATIONS – PHASE 1
KILLENS POND STATE PARK, KENT COUNTY, DELAWARE
DNREC PROJECT NO. KP-24 – CONTRACT # 2015-KP-100

BID FORM

NON-COLLUSION STATEMENT

This is to certify that the undersigned bidder has neither directly nor indirectly, entered into any agreement, participated in any collusion or otherwise taken any action in restraint of free competitive bidding in connection with this proposal submitted this date *(to the Office of Management and Budget, Division of Facilities Management)*.

All the terms and conditions of *(Project or Contract Number)* have been thoroughly examined and are understood.

NAME OF BIDDER: _____

AUTHORIZED REPRESENTATIVE (TYPED): _____

AUTHORIZED REPRESENTATIVE (SIGNATURE): _____

TITLE: _____

ADDRESS OF BIDDER: _____

_____

_____

E-MAIL: _____

PHONE NUMBER: _____

Sworn to and Subscribed before me this _____ day of _____ 20____.

My Commission expires _____. NOTARY PUBLIC _____.

THIS PAGE MUST BE SIGNED AND NOTARIZED FOR YOUR BID TO BE CONSIDERED.

NOT FOR BIDDING

STATE OF DELAWARE
OFFICE OF MANAGEMENT AND BUDGET

BID BOND

TO ACCOMPANY PROPOSAL
(Not necessary if security is used)

KNOW ALL MEN BY THESE PRESENTS That: _____ _____of _____ in the County of _____ _____and State of _____as **Principal**, and _____ _____ of _____ in the County of _____ and State of _____ as **Surety**, legally authorized to do business in the State of Delaware ("**State**"), are held and firmly unto the **State** in the sum of _____ _____ Dollars ($_____), or _____ percent not to exceed _____ _____ Dollars ($_____) of amount of bid on Contract No. _____, to be paid to the **State** for the use and benefit of _____ (***insert State agency name***) for which payment well and truly to be made, we do bind ourselves, our and each of our heirs, executors, administrators, and successors, jointly and severally for and in the whole firmly by these presents.

NOW THE CONDITION OF THIS OBLIGATION IS SUCH That if the above bonded **Principal** who has submitted to the _____ (***insert State agency name***) a certain proposal to enter into this contract for the furnishing of certain material and/or services within the **State**, shall be awarded this Contract, and if said **Principal** shall well and truly enter into and execute this Contract as may be required by the terms of this Contract and approved by the _____ _____ (***insert State agency name***) this Contract to be entered into within twenty days after the date of official notice of the award thereof in accordance with the terms of said proposal, then this obligation shall be void or else to be and remain in full force and virtue.

Sealed with _____ seal and dated this _____day of _____ in the year of our Lord two thousand and _____ (20___).

SEALED, AND DELIVERED IN THE
Presence of

_____
Name of Bidder (Organization)

Corporate Seal By: _____
Authorized Signature

Attest _____ _____
Title

_____
Name of Surety

Witness:_____ By: _____

_____
Title

NOT FOR BIDDING

(PAGE LEFT BLANK)

NOT FOR BIDDING

STANDARD FORM OF AGREEMENT BETWEEN OWNER AND CONTRACTOR A101-2007

The contract to be utilized on this project shall be the "Standard Form of Agreement Between Owner and Contractor" AIA Document A101-2007.

NOT FOR BIDDING

(PAGE LEFT BLANK)

NOT FOR BIDDING

SUPPLEMENT TO AGREEMENT BETWEEN OWNER AND CONTRACTOR

The following supplements modify the "Standard Form of Agreement Between Owner and Contractor," AIA Document A101-2007. Where a portion of the Standard Form of Agreement is modified or deleted by the following, the unaltered portions of the Standard Form of Agreement shall remain in effect.

ARTICLE 5: PAYMENTS

5.1 PROGRESS PAYMENTS

5.1.3 Delete paragraph 5.1.3 in its entirety and replace with the following:

"Provided that a valid Application for Payment is received by the Architect that meets all requirements of the Contract, payment shall be made by the Owner not later than 30 days after the Owner receives the valid Application for Payment."

ARTICLE 6: DISPUTE RESOLUTION

6.2 BINDING DISPUTE RESOLUTION

Check Other – and add the following sentence:

"Any remedies available in law or in equity."

ARTICLE 8: MISCELLANEOUS PROVISIONS

8.2 Insert the following:

"Payments are due 30 days after receipt of a valid Application for Payment. After that 30 day period, interest may be charged at the rate of 1% per month not to exceed 12% per annum."

8.5 Delete paragraph 8.5 in its entirety and replace with the following:

"The Contractor's representative shall not be changed without ten (10) days written notice to the Owner."

END OF SUPPLEMENT TO AGREEMENT BETWEEN OWNER AND CONTRACTOR

NOT FOR BIDDING

(PAGE LEFT BLANK)

NOT FOR BIDDING

STATE OF DELAWARE
OFFICE OF MANAGEMENT AND BUDGET

PAYMENT BOND

Bond Number _____

KNOW ALL PERSONS BY THESE PRESENTS, that we, _____, as principal ("**Principal**"), and _____, a _____ corporation, legally authorized to do business in the State of Delaware, as surety ("**Surety**"), are held and firmly bound unto the ("**Owner**") **State of Delaware, Office of Management and Budget, Division of Facilities Management** in the amount of _____ ($_____), to be paid to **Owner**, for which payment well and truly to be made, we do bind ourselves, our and each and every of our heirs, executors, administrations, successors and assigns, jointly and severally, for and in the whole firmly by these presents.

Sealed with our seals and dated this _____ day of_____, 20__.

NOW THE CONDITION OF THIS OBLIGATION IS SUCH, that if **Principal**, who has been awarded by **Owner** that certain contract known as Contract No. **MJ4506000001** dated the _____ day of _____, 20__ (the "Contract"), which Contract is incorporated herein by reference, shall well and truly pay all and every person furnishing materials or performing labor or service in and about the performance of the work under the Contract, all and every sums of money due him, her, them or any of them, for all such materials, labor and service for which **Principal** is liable, shall make good and reimburse **Owner** sufficient funds to pay such costs in the completion of the Contract as **Owner** may sustain by reason of any failure or default on the part of **Principal**, and shall also indemnify and save harmless **Owner** from all costs, damages and expenses arising out of or by reason of the performance of the Contract and for as long as provided by the Contract; then this obligation shall be void, otherwise to be and remain in full force and effect.

Surety, for value received, for itself and its successors and assigns, hereby stipulates and agrees that the obligation of **Surety** and its bond shall be in no way impaired or affected by any extension of time, modification, omission, addition or change in or to the Contract or the work to be performed thereunder, or by any payment thereunder before the time required therein, or by any waiver of any provisions thereof, or by any assignment, subletting or other transfer thereof or of any work to be performed or any monies due or to become due thereunder; and **Surety** hereby waives notice of any and all such extensions, modifications, omissions, additions, changes, payments, waivers, assignments, subcontracts and transfers and hereby expressly stipulates and agrees that any and all things done and omitted to be done by and in relation to assignees, subcontractors, and other transferees shall have the same effect as to **Surety** as though done or omitted to be done by or in relation to **Principal**.

Surety hereby stipulates and agrees that no modifications, omission or additions in or to the terms of the Contract shall in any way whatsoever affect the obligation of **Surety** and its bond.

NOT FOR BIDDING

Any proceeding, legal or equitable, under this Bond may be brought in any court of competent jurisdiction in the State of Delaware. Notices to **Surety** or Contractor may be mailed or delivered to them at their respective addresses shown below.

IN WITNESS WHEREOF, **Principal** and **Surety** have hereunto set their hand and seals, and such of them as are corporations have caused their corporate seal to be hereto affixed and these presents to be signed by their duly authorized officers, the day and year first above written.

PRINCIPAL

Name: _____

Witness or Attest: Address: _____

_____ By: _____(SEAL)
Name: Name:
Title:

(Corporate Seal)

SURETY

Name: _____

Witness or Attest: Address: _____

_____ By: _____(SEAL)
Name: Name:
Title:

(Corporate Seal)

NOT FOR BIDDING

STATE OF DELAWARE
OFFICE OF MANAGEMENT AND BUDGET

PERFORMANCE BOND

Bond Number: _____

KNOW ALL PERSONS BY THESE PRESENTS, that we, _____, as principal ("**Principal**"), and _____, a _____ corporation, legally authorized to do business in the State of Delaware, as surety ("**Surety**"), are held and firmly bound unto the ("**Owner**") **State of Delaware, Office of Management and Budget, Division of Facilities Management** in the amount of _____ ($_____), to be paid to **Owner**, for which payment well and truly to be made, we do bind ourselves, our and each and every of our heirs, executors, administrations, successors and assigns, jointly and severally, for and in the whole, firmly by these presents.

Sealed with our seals and dated this _____ day of _____, 20__.

NOW THE CONDITION OF THIS OBLIGATION IS SUCH, that if **Principal**, who has been awarded by **Owner** that certain contract known as Contract No. **MJ4506000001** dated the _____ day of _____, 20__ (the "Contract"), which Contract is incorporated herein by reference, shall well and truly provide and furnish all materials, appliances and tools and perform all the work required under and pursuant to the terms and conditions of the Contract and the Contract Documents (as defined in the Contract) or any changes or modifications thereto made as therein provided, shall make good and reimburse **Owner** sufficient funds to pay the costs of completing the Contract that **Owner** may sustain by reason of any failure or default on the part of **Principal**, and shall also indemnify and save harmless **Owner** from all costs, damages and expenses arising out of or by reason of the performance of the Contract and for as long as provided by the Contract; then this obligation shall be void, otherwise to be and remain in full force and effect.

Surety, for value received, hereby stipulates and agrees, if requested to do so by **Owner**, to fully perform and complete the work to be performed under the Contract pursuant to the terms, conditions and covenants thereof, if for any cause **Principal** fails or neglects to so fully perform and complete such work.

Surety, for value received, for itself and its successors and assigns, hereby stipulates and agrees that the obligation of **Surety** and its bond shall be in no way impaired or affected by any extension of time, modification, omission, addition or change in or to the Contract or the work to be performed thereunder, or by any payment thereunder before the time required therein, or by any waiver of any provisions thereof, or by any assignment, subletting or other transfer thereof or of any work to be performed or any monies due or to become due thereunder; and **Surety** hereby waives notice of any and all such extensions, modifications, omissions, additions, changes, payments, waivers, assignments, subcontracts and transfers and hereby expressly stipulates and agrees that any and all things done and omitted to be done by and in relation to assignees, subcontractors, and other transferees shall have the same effect as to **Surety** as though done or omitted to be done by or in relation to **Principal**.

NOT FOR BIDDING

Surety hereby stipulates and agrees that no modifications, omissions or additions in or to the terms of the Contract shall in any way whatsoever affect the obligation of **Surety** and its bond.

Any proceeding, legal or equitable, under this Bond may be brought in any court of competent jurisdiction in the State of Delaware. Notices to **Surety** or Contractor may be mailed or delivered to them at their respective addresses shown below.

IN WITNESS WHEREOF, **Principal** and **Surety** have hereunto set their hand and seals, and such of them as are corporations have caused their corporate seal to be hereto affixed and these presents to be signed by their duly authorized officers, the day and year first above written.

PRINCIPAL

Name: _____

Witness or Attest: Address: _____

_____ By: _____(SEAL)
Name: Name:
Title:

(Corporate Seal)

SURETY

Name: _____

Witness or Attest: Address: _____

_____ By: _____ (SEAL)
Name: Name:
Title:

(Corporate Seal)

NOT FOR BIDDING

GENERAL CONDITIONS

TO THE

CONTRACT

The General Conditions of this Contract are as stated in the American Institute of Architects Document AIA A201 (2007 Edition), entitled General Conditions of the Contract for Construction and is part of this project manual as if herein written in full.

NOT FOR BIDDING

(PAGE LEFT BLANK)

NOT FOR BIDDING

SUPPLEMENTARY GENERAL CONDITIONS

The following supplements modify the "General Conditions of the Contract for Construction," AIA Document A201, 2007. Where a portion of the General Conditions is modified or deleted by the Supplementary Conditions, the unaltered portions of the General Conditions shall remain in effect.

TABLE OF ARTICLES

1. GENERAL PROVISIONS
2. OWNER
3. CONTRACTOR
4. ADMINISTRATION OF THE CONTRACT
5. SUBCONTRACTORS
6. CONSTRUCTION BY OWNER OR BY SEPARATE CONTRACTORS
7. CHANGES IN THE WORK
8. TIME
9. PAYMENTS AND COMPLETION
10. PROTECTION OF PERSONS AND PROPERTY
11. INSURANCE AND BONDS
12. UNCOVERING AND CORRECTION OF WORK
13. MISCELLANEOUS PROVISIONS
14. TERMINATION OR SUSPENSION OF THE CONTRACT

NOT FOR BIDDING

ARTICLE 1: GENERAL PROVISIONS

1.1 BASIC DEFINITIONS

1.1.1 THE CONTRACT DOCUMENTS

Delete the last sentence in its entirety and replace with the following:

"The Contract Documents also include Advertisement for Bid, Instructions to Bidder, sample forms, the Bid Form, the Contractor's completed Bid and the Award Letter."

Add the following Paragraph:

1.1.1.1 In the event of conflict or discrepancies among the Contract Documents, the Documents prepared by the State of Delaware, Division of Facilities Management, shall take precedence over all other documents.

1.2 CORRELATION AND INTENT OF THE CONTRACT DOCUMENTS

Add the following Paragraphs:

1.2.4 In the case of an inconsistency between the Drawings and the Specifications, or within either document not clarified by addendum, the better quality or greater quantity of work shall be provided in accordance with the Architect's interpretation.

1.2.5 The word "PROVIDE", as used in the Contract Documents, shall mean "FURNISH AND INSTALL" and shall include, without limitation, all labor, materials, equipment, transportation, services and other items required to complete the Work.

1.2.6 The word "PRODUCT", as used in the Contract Documents, means all materials, systems and equipment.

1.5 OWNERSHIP AND USE OF DRAWINGS, SPECIFICATIONS AND OTHER INSTRUMENTS OF SERVICE

Delete Paragraph 1.5.1 in its entirety and replace with the following:

"All pre-design studies, drawings, specifications and other documents, including those in electronic form, prepared by the Architect under this Agreement are, and shall remain, the property of the Owner, whether the Project for which they are made is executed or not. Such documents may be used by the Owner to construct one or more like Projects without the approval of, or additional compensation to, the Architect. The Contractor, Subcontractors, Sub-subcontractors and Material or Equipment Suppliers are authorized to use and reproduce applicable portions of the Drawings, Specifications and other documents prepared by the Architect and the Architect's consultants, appropriate to and for use in the execution of their Work under the Contract Documents. They are not to be used by the Contractor or any Subcontractor, Sub-subcontractor or Material and Equipment Supplier on other Projects or for additions to this Project, outside the scope of the Work without the specific written consent of the Owner, Architect and Architect's consultants.

NOT FOR BIDDING

The Architect shall not be liable for injury or damage resulting from the re-use of drawings and specifications if the Architect is not involved in the re-use Project. Prior to re-use of construction documents for a Project in which the Architect is not also involved, the Owner will remove from such documents all identification of the original Architect including name, address and professional seal or stamp."

Delete Paragraph 1.5.2 in its entirety.

ARTICLE 2: OWNER

2.2 INFORMATION AND SERVICES REQUIRED OF THE OWNER

To Subparagraph 2.2.3 – Add the following sentence:

"The Contractor, at their expense, shall bear the costs to accurately identify the location of all underground utilities in the area of their excavation and shall bear all cost for any repairs required, out of failure to accurately identify said utilities."

Delete Subparagraph 2.2.5 in its entirety and substitute the following:

2.2.5 The Contractor shall be furnished free of charge up to five (5) sets of the Drawings and Project Manuals. Additional sets will be furnished at the cost of reproduction, postage and handling.

ARTICLE 3: CONTRACTOR

3.2 REVIEW OF CONTRACT DOCUMENTS AND FIELD CONDITIONS BY CONTRACTOR

Amend Paragraph 3.2.2 to state that any errors, inconsistencies or omissions discovered, shall be reported to the Architect and Owner immediately.

Delete the third sentence in Paragraph 3.2.3.

3.3 SUPERVISION AND CONSTRUCTION PROCEDURES

Add the following Paragraphs:

3.3.2.1 The Contractor shall immediately remove from the Work, whenever requested to do so by the Owner, any person who is considered by the Owner or Architect to be incompetent or disposed to be so disorderly, or who for any reason is not satisfactory to the Owner, and that person shall not again be employed on the Work without the consent of the Owner or the Architect.

3.3.4 The Contractor must provide suitable storage facilities at the Site for the proper protection and safe storage of their materials. Consult the Owner and the Architect before storing any materials.

3.3.5 When any room is used as a shop, storeroom, office, etc., by the Contractor or Subcontractor(s) during the construction of the Work, the Contractor making use of these areas will be held responsible for any repairs, patching or cleaning arising from such use.

NOT FOR BIDDING

3.4 LABOR AND MATERIALS

Add the Following Paragraphs:

3.4.4 Before starting the Work, each Contractor shall carefully examine all preparatory Work that has been executed to receive their Work. Check carefully, by whatever means are required, to ensure that its Work and adjacent, related Work, will finish to proper contours, planes and levels. Promptly notify the General Contractor/Construction Manager of any defects or imperfections in preparatory Work, which will in any way affect satisfactory completion of its Work. Absence of such notification will be construed as an acceptance of preparatory Work and later claims of defects will not be recognized.

3.4.5 Under no circumstances shall the Contractor's Work proceed prior to preparatory Work having been completely cured, dried and/or otherwise made satisfactory to receive this Work. Responsibility for timely installation of all materials rests solely with the Contractor responsible for that Work, who shall maintain coordination at all times.

3.5 WARRANTY

Add the following Paragraphs:

3.5.1 The Contractor will guarantee all materials and workmanship against original defects, except injury from improper and usual wear when used for the purpose intended, for two years after Acceptance by the Owner, and will maintain all items in perfect condition during the period of guarantee.

3.5.2 Defects appearing during the period of guarantee will be made good by the Contractor at his expense upon demand of the Owner, it being required that all work will be in perfect condition when the period of guarantee will have elapsed.

3.5.3 In addition to the General Guarantee there are other guarantees required for certain items for different periods of time than the two years as above, and are particularly so stated in that part of the specifications referring to same. The said guarantees will commence at the same time as the General Guarantee.

3.5.4 If the Contractor fails to remedy any failure, defect or damage within a reasonable time after receipt of notice, the Owner will have the right to replace, repair, or otherwise remedy the failure, defect or damage at the Contractor's expense.

3.11 DOCUMENTS AND SAMPLES AT THE SITE

Add the following Paragraphs:

3.11.1 During the course of the Work, the Contractor shall maintain a record set of drawings on which the Contractor shall mark the actual physical location of all piping, valves, equipment, conduit, outlets, access panels, controls, actuators, including all appurtenances that will be concealed once construction is complete, etc., including all invert elevations.

NOT FOR BIDDING

3.11.2 At the completion of the project, the Contractor shall obtain a set of reproducible drawings from the Architect, and neatly transfer all information outlined in 3.11.1 to provide a complete record of the as-built conditions.

3.11.3 The Contractor shall provide two (2) prints of the as-built conditions, along with the reproducible drawings themselves, to the Owner and one (1) set to the Architect. In addition, attach one complete set to each of the Operating and Maintenance Instructions/Manuals.

3.17 In the second sentence of the paragraph, insert "indemnify" between "shall" and "hold".

ARTICLE 4: ADMINISTRATION OF THE CONTRACT

4.2 ADMINISTRATION OF THE CONTRACT

Delete the first sentence of Paragraph 4.2.7 and replace with the following:

The Architect will review and approve or take other appropriate action upon the Contractor's submittals such as Shop Drawings, Product Data and Samples for the purpose of checking for conformance with the Contract Documents.

Delete the second sentence of Paragraph 4.2.7 and replace with the following:

The Architect's action will be taken with such reasonable promptness as to cause no delay in the Work in the activities of the Owner, Contractor or separate Contractors, while allowing sufficient time in the Owner's professional judgment to permit adequate review.

Add the following Paragraph:

4.2.10.1 There will be no full-time project representative provided by the Owner or Architect on this project.

Add to Paragraph 4.2.13 "and in compliance with all local requirements." to the end of the sentence.

ARTICLE 5: SUBCONTRACTORS

5.2 AWARD OF SUBCONTRACTS AND OTHER CONTRACTS FOR PORTIONS OF THE WORK

Delete Paragraph 5.2.3 in its entirety and replace with the following:

5.2.3 If the Owner or Architect has reasonable objection to a person or entity proposed by the Contractor, the Contractor shall propose another to whom the Owner or Architect has no reasonable objection, subject to the statutory requirements of 29 Delaware Code § 6962(d)(10)b.3 and 4.

ARTICLE 6: CONSTRUCTION BY OWNER OR BY SEPARATE CONTRACTORS

6.1 OWNER'S RIGHT TO PERFORM CONSTRUCTION AND TO AWARD SEPARATE CONTRACTS

Delete Paragraph 6.1.4 in its entirety.

6.2 MUTUAL RESPONSIBILITY

NOT FOR BIDDING

6.2.3 In the second sentence, strike the word “shall” and insert the word “may”.

ARTICLE 7: CHANGES IN THE WORK

(SEE ARTICLE 7: CHANGES IN WORK IN THE GENERAL REQUIREMENTS)

ARTICLE 8: TIME

8.2 PROGRESS AND COMPLETION

Add the following Paragraphs:

8.2.1.1 Refer to Specification Section SUMMARY OF WORK for Contract time requirements.

8.2.4 If the Work falls behind the Progress Schedule as submitted by the Contractor, the Contractor shall employ additional labor and/or equipment necessary to bring the Work into compliance with the Progress Schedule at no additional cost to the Owner.

8.3 DELAYS AND EXTENSION OF TIME

8.3.1 Strike “arbitration” and insert “remedies at law or in equity”.

Add the following Paragraph:

8.3.2.1 The Contractor shall update the status of the suspension, delay, or interruption of the Work with each Application for Payment. (The Contractor shall report the termination of such cause immediately upon the termination thereof.) Failure to comply with this procedure shall constitute a waiver for any claim for adjustment of time or price based upon said cause.

Delete Paragraph 8.3.3 in its entirety and replace with the following:

8.3.3 Except in the case of a suspension of the Work directed by the Owner, an extension of time under the provisions of Paragraph 8.3.1 shall be the Contractor’s sole remedy in the progress of the Work and there shall be no payment or compensation to the Contractor for any expense or damage resulting from the delay.

Add the following Paragraph:

8.3.4 By permitting the Contractor to work after the expired time for completion of the project, the Owner does not waive their rights under the Contract.

ARTICLE 9: PAYMENTS AND COMPLETION

9.2 SCHEDULE OF VALUES

Add the following Paragraphs:

9.2.1 The Schedule of Values shall be submitted using AIA Document G702, Continuation Sheet to G703.

NOT FOR BIDDING

9.2.2 The Schedule of Values is to include a line item for Project Closeout Document Submittal. The value of this item is to be no less than 1% of the initial contract amount.

9.3 APPLICATIONS FOR PAYMENT

Add the following Paragraph:

9.3.1.3 Application for Payment shall be submitted on AIA Document G702 "Application and Certificate for Payment", supported by AIA Document G703 "Continuation Sheet". Said Applications shall be fully executed and notarized.

Add the following Paragraphs:

9.3.4 Until Closeout Documents have been received and outstanding items completed the Owner will pay 95% (ninety-five percent) of the amount due the Contractor on account of progress payments.

9.3.5 The Contractor shall provide a current and updated Progress Schedule to the Architect with each Application for Payment. Failure to provide Schedule will be just cause for rejection of Application for Payment.

9.5 DECISIONS TO WITHHOLD CERTIFICATION

Add the following to 9.5.1:

.8 failure to provide a current Progress Schedule;
.9 a lien or attachment is filed;
.10 failure to comply with mandatory requirements for maintaining Record Documents.

9.6 PROGRESS PAYMENTS

Delete Paragraph 9.6.1 in its entirety and replace with the following:

9.6.1 After the Architect has approved and issued a Certificate for Payment, payment shall be made by the Owner within 30 days after Owner's receipt of the Certificate for Payment.

9.7 FAILURE OF PAYMENT

In first sentence, strike "seven" and insert "thirty (30)". Also strike "binding dispute resolution" and insert "remedies at law or in equity".

9.8 SUBSTANTIAL COMPLETION

Subparagraph 9.8.3 - Add the following sentence:

"If the Architect is required to make more than 2 inspections of the same portion of work, the Contractor shall be responsible for all costs associated with subsequent inspections including but not limited to any Architect's fees."

9.8.5 In the second sentence, strike "shall" and insert "may".

NOT FOR BIDDING

ARTICLE 10: PROTECTION OF PERSONS AND PROPERTY

10.1 SAFETY PRECAUTIONS AND PROGRAMS

Add the following Paragraphs:

10.1.1.1.1 Each Contractor shall develop a safety program in accordance with the Occupational Safety and Health Act of 1970. A copy of said plan shall be furnished to the Owner and Architect prior to the commencement of that Contractor's Work.

10.1.2 Each Contractor shall appoint a Safety Representative. Safety Representatives shall be someone who is on site on a full time basis. If deemed necessary by the Owner or Architect, Contractor Safety meetings will be scheduled. The attendance of all Safety Representatives will be required. Minutes will be recorded of said meetings by the Contractor and will be distributed to all parties, as well as, posted in all job offices/trailers etc.

10.2 SAFETY OF PERSONS AND PROPERTY

Add the following Paragraph:

10.2.4.1 As required in the Hazardous Chemical Act of June 1984, all vendors supplying any material that may be defined as hazardous must provide Material Safety Data Sheets for those products. Any chemical product should be considered hazardous if it has a caution warning on the label relating to a potential physical or health hazard, if it is known to be present in the work place, and if employees may be exposed under normal conditions or in foreseeable emergency situations. Material Safety Data Sheets shall be provided directly to the Owner, along with the shipping slips that include those products.

10.3 HAZARDOUS MATERIALS

Delete Paragraph 10.3.3 in its entirety.

Delete Paragraph 10.3.5 in its entirety.

ARTICLE 11: INSURANCE AND BONDS

11.1 CONTRACTOR'S LIABILITY INSURANCE

11.1.4 Strike "the Owner" immediately following "(1)" and strike "and (2) the Owner as an additional insured for claims caused in whole or in part by the Contractor's negligent acts or omissions during the Contractor's completed operations."

11.2 OWNER'S LIABILITY INSURANCE

Delete Paragraph 11.2 in its entirety.

NOT FOR BIDDING

11.3 PROPERTY INSURANCE

Delete Paragraph 11.3 in its entirety and replace with the following:

11.3 The State will not provide Builder's All Risk Insurance for the Project. The Contractor and all Subcontractors shall provide property coverage for their tools and equipment, as necessary. Any mandatory deductible required by the Contractor's Insurance shall be the responsibility of the Contractor.

11.4 PERFORMANCE BOND AND PAYMENT BOND

11.4.1 Add the following sentence: "The bonds will conform to those forms approved by the Office of Management and Budget."

ARTICLE 12: UNCOVERING AND CORRECTION OF WORK

12.2.2 AFTER SUBSTANTIAL COMPLETION

Add the following Paragraph:

12.2.2.1.1 At any time during the progress of the Work, or in any case where the nature of the defects will be such that it is not expedient to have corrected, the Owner, at its option, will have the right to deduct such sum, or sums, of money from the amount of the Contract as it considers justified to adjust the difference in value between the defective work and that required under contract, including any damage to the structure.

12.2.2.1 Strike "one" and insert "two".

12.2.2.2 Strike "one" and insert "two".

12.2.2.3 Strike "one" and insert "two".

12.2.5 In second sentence, strike "one" and insert "two".

ARTICLE 13: MISCELLANEOUS PROVISIONS

13.1 GOVERNING LAW

Strike "except that, if the parties have selected arbitration as the method of binding dispute resolution, the Federal Arbitration Act shall govern Section 15.4."

13.6 INTEREST

Strike "the date payment is due at such rate as the parties may agree upon in writing or, in the absence thereof, at the legal rate prevailing from time to time at the place where the Project is located." Insert "30 days of presentment of the authorized Certificate of Payment at the annual rate of 12% or 1% per month.

13.7 TIME LIMITS ON CLAIMS

Strike the last sentence.

Add the following Paragraph:

13.8 CONFLICTS WITH FEDERAL STATUTES OR REGULATIONS

NOT FOR BIDDING

13.8.1 If any provision, specifications or requirement of the Contract Documents conflict or is inconsistent with any statute, law or regulation of the government of the United States of America, the Contractor shall notify the Architect and Owner immediately upon discovery.

ARTICLE 14: TERMINATION OR SUSPENSION OF THE CONTRACT

14.4 TERMINATION BY THE OWNER FOR CONVENIENCE

Delete Paragraph 14.4.3 in its entirety and replace with the following:

14.4.3 In case of such termination for the Owner's convenience, the Contractor shall be entitled to receive payment for Work executed, and cost incurred by reason of such termination along with reasonable overhead.

ARTICLE 15: CLAIMS AND DISPUTES

15.1.2 Throughout the Paragraph strike "21" and insert "45"

15.1.6 CLAIMS FOR CONSEQUENTIAL DAMAGES

Delete Paragraph 15.1.6 in its entirety.

15.2 INITIAL DECISION

Delete Paragraph 15.2.5 in its entirety and replace with the following:

15.2.5 The Architect will approve or reject Claims by written decision, which shall state the reasons therefore and shall notify the parties of any change in the Contract Sum or Contract Time or both. The approval or rejection of a Claim by the Architect shall be subject to mediation and other remedies at law or in equity.

Delete Paragraph 15.2.6 and its subparagraphs, in their entirety.

15.3 MEDIATION

15.3.1 Strike "binding dispute resolution" and insert "any or all remedies at law or in equity".

15.3.2 In the first sentence, delete "administered by the American Arbitration Association in accordance with its Construction Industry Mediation Procedure in effect on the date of the Agreement," Strike "binding dispute resolution" and insert "remedies at law and in equity".

15.4 ARBITRATION

Delete Paragraph 15.4 and its sub-sections in its entirety.

END OF SUPPLEMENTARY GENERAL CONDITIONS

NOT FOR BIDDING

007346 WAGE RATES

STATE OF DELAWARE
DEPARTMENT OF LABOR
DIVISION OF INDUSTRIAL AFFAIRS
OFFICE OF LABOR LAW ENFORCEMENT
PHONE: (302) 451-3423

Mailing Address:
225 CORPORATE BOULEVARD
SUITE 104
NEWARK, DE 19702

Located at:
225 CORPORATE BOULEVARD
SUITE 104
NEWARK, DE 19702

PREVAILING WAGES FOR **HEAVY CONSTRUCTION** EFFECTIVE MARCH 13, 2015

CLASSIFICATION	NEW CASTLE	KENT	SUSSEX
ASBESTOS WORKERS	21.1[illegible]	18.60	40.43
BOILERMAKERS	7[illegible].52	30.73	56.37
BRICKLAYERS	44.98	22.19	23.83
CARPENTERS	51.86	51.86	41.22
CEMENT FINISHERS	43.00	23.30	16.00
ELECTRICAL LINE WORKERS	62.75	26.30	62.75
ELECTRICIANS	63.60	63.60	63.60
GLAZIERS	19.54	16.96	11.48
INSULATORS	53.38	53.38	53.38
IRON WORKERS	60.12	60.12	55.78
LABORERS	40.95	40.95	40.95
MILLWRIGHTS	65.23	65.23	51.80
PAINTERS	77.09	60.64	60.64
PILEDRIVERS	69.32	37.64	29.30
PLASTERERS	18.40	15.97	10.80
PLUMBERS/PIPEFITTERS/STEAMFITTERS	76.78	76.78	17.12
POWER EQUIPMENT OPERATORS	47.93	59.81	59.81
SHEET METAL WORKERS	29.40	18.23	17.13
SPRINKLER FITTERS	31.68	11.99	9.93
TRUCK DRIVERS	28.34	19.72	21.40

CERTIFIED : 6/26/15 BY: [signature]
ADMINISTRATOR, OFFICE OF LABOR LAW ENFORCEMENT

NOTE: THESE RATES ARE PROMULGATED AND ENFORCED PURSUANT TO THE PREVAILING WAGE REGULATIONS ADOPTED BY THE DEPARTMENT OF LABOR ON APRIL 3, 1992.

CLASSIFICATIONS OF WORKERS ARE DETERMINED BY THE DEPARTMENT OF LABOR. FOR ASSISTANCE IN CLASSIFYING WORKERS, OR FOR A COPY OF THE REGULATIONS OR CLASSIFICATIONS, PHONE (302) 451-3423.

NON- REGISTERED APPRENTICES MUST BE PAID THE MECHANICS RATE.

Project: Killens Park Water Park Renovations - Walkway, Temp Slide relocation, Phase 1 Slide, Phase 1 Speed Slide, Phase 1 Slides UV, Decking, Pavers, Well, Fencing, Site Work, Lighting, and Pool Infrastructure

NOT FOR BIDDING

STATE OF DELAWARE
DEPARTMENT OF LABOR
DIVISION OF INDUSTRIAL AFFAIRS
OFFICE OF LABOR LAW ENFORCEMENT
PHONE: (302) 451-3423

Mailing Address:
225 CORPORATE BOULEVARD
SUITE 104
NEWARK, DE 19702

Located at:
225 CORPORATE BOULEVARD
SUITE 104
NEWARK, DE 19702

PREVAILING WAGES FOR **BUILDING CONSTRUCTION** EFFECTIVE MARCH 13, 2015

CLASSIFICATION	NEW CASTLE	KENT	SUSSEX
ASBESTOS WORKERS	21.87	26.94	39.20
BOILERMAKERS	39.67	33.22	48.83
BRICKLAYERS	49.39	49.39	49.39
CARPENTERS	51.86	51.86	51.86
CEMENT FINISHERS	29.27	29.11	21.20
ELECTRICAL LINE WORKERS	41.49	37.29	28.44
ELECTRICIANS	63.60	63.60	37.29
ELEVATOR CONSTRUCTORS	80.31	40.93	30.55
GLAZIERS	67.35	67.35	20.15
INSULATORS	53.38	53.38	53.38
IRON WORKERS	60.12	60.12	60.12
LABORERS	40.95	40.95	40.95
MILLWRIGHTS	47.47	65.23	51.80
PAINTERS	43.04	44.94	44.94
PILEDRIVERS	71.17	37.64	30.45
PLASTERERS	21.60	28.55	17.50
PLUMBERS/PIPEFITTERS/STEAMFITTERS	60.20	36.66	54.49
POWER EQUIPMENT OPERATORS	43.88	58.31	24.13
ROOFERS – COMPOSITION	21.82	20.45	17.63
ROOFERS – SHINGLE/SLATE/TILE	17.59	13.72	14.10
SHEET METAL WORKERS	47.05	64.16	64.16
SOFT FLOOR LAYERS	48.57	48.57	48.57
SPRINKLER FITTERS	53.52	53.52	53.52
TERRAZZO/MARBLE/TILE FINISHERS	54.11	52.50	45.45
TERRAZZO /MARBLE/TILE SETTERS	62.13	60.28	52.63
TRUCK DRIVERS	24.43	26.64	20.03

CERTIFIED: 6/26/15 BY: _____
ADMINISTRATOR, OFFICE OF LABOR LAW ENFORCEMENT

NOTE: THESE RATES ARE PROMULGATED AND ENFORCED PURSUANT TO THE PREVAILING WAGE REGULATIONS ADOPTED BY THE DEPARTMENT OF LABOR ON APRIL 3, 1992.

CLASSIFICATIONS OF WORKERS ARE DETERMINED BY THE DEPARTMENT OF LABOR. FOR ASSISTANCE IN CLASSIFYING WORKERS, OR FOR A COPY OF THE REGULATIONS OR CLASSIFICATIONS, PHONE (302) 451-3423

NON- REGISTERED APPRENTICES MUST BE PAID THE MECHANICS RATE.

Project: Killens Pond Water Park Renovations – Concession Stand, Ticketing, Bathhouse, Pool Equipment Building, Locker, and Showers

NOT FOR BIDDING

GENERAL REQUIREMENTS

TABLE OF ARTICLES

1. GENERAL PROVISIONS
2. OWNER
3. CONTRACTOR
4. ADMINISTRATION OF THE CONTRACT
5. SUBCONTRACTORS
6. CONSTRUCTION BY OWNER OR BY SEPARATE CONTRACTORS
7. CHANGES IN THE WORK
8. TIME
9. PAYMENTS AND COMPLETION
10. PROTECTION OF PERSONS AND PROPERTY
11. INSURANCE AND BONDS
12. UNCOVERING AND CORRECTION OF WORK
13. MISCELLANEOUS PROVISIONS
14. TERMINATION OR SUSPENSION OF THE CONTRACT

NOT FOR BIDDING

ARTICLE 1: GENERAL

1.1 CONTRACT DOCUMENTS

1.1.1 The intent of the Contract Documents is to include all items necessary for the proper execution and completion of the Work by the Contractor. The Contract Documents are complementary and what is required by one shall be as binding as if required by all. Performance by the Contractor shall be required to an extent consistent with the Contract Documents and reasonably inferable from them as being necessary to produce the intended results.

1.1.2 Work including material purchases shall not begin until the Contractor is in receipt of a bonafide State of Delaware Purchase Order. Any work performed or material purchases prior to the issuance of the Purchase Order is done at the Contractor's own risk and cost.

1.2 EQUALITY OF EMPLOYMENT OPPORTUNITY ON PUBLIC WORKS

1.2.1 For Public Works Projects financed in whole or in part by state appropriation, the Contractor agrees that during the performance of this contract:

1. The Contractor will not discriminate against any employee or applicant for employment because of race, creed, color, sex or national origin. The Contractor will take positive steps to ensure that applicants are employed and that employees are treated during employment without regard to their race, creed, color, sex or national origin. Such action shall include, but not be limited to, the following: employment, upgrading, demotion or transfer; recruitment or recruitment advertising; layoff or termination; rates of pay or other forms of compensation; and selection for training, including apprenticeship. The Contractor agrees to post in conspicuous places available to employees and applicants for employment notices to be provided by the contracting agency setting forth this nondiscrimination clause.

2. The Contractor will, in all solicitations or advertisements for employees placed by or on behalf of the Contractor, state that all qualified applicants will receive consideration for employment without regard to race, creed, color, sex or national origin."

ARTICLE 2: OWNER

(NO ADDITIONAL GENERAL REQUIREMENTS – SEE SUPPLEMENTARY GENERAL CONDITIONS)

ARTICLE 3: CONTRACTOR

3.1 Schedule of Values: The successful Bidder shall within twenty (20) days after receiving notice to proceed with the work, furnish to the Owner a complete schedule of values on the various items comprising the work.

3.2 Subcontracts: Upon approval of Subcontractors, the Contractor shall award their Subcontracts as soon as possible after the signing of their own contract and see that all material, their own and those of their Subcontractors, are promptly ordered so that the work will not be delayed by failure of materials to arrive on time.

3.3 Before commencing any work or construction, the General Contractor is to consult with the Owner as to matters in connection with access to the site and the allocation of Ground Areas, for the various features of hauling, storage, etc.

NOT FOR BIDDING

3.4 The Contractor shall supervise and direct the Work, using the Contractors best skill and attention. The Contractor shall be solely responsible for and have control over construction means, methods, techniques, sequences and procedures and for coordinating all portions of the Work under the Contract, unless the Contract Documents give other specific instructions.

3.5 The Contractor shall enforce strict discipline and good order among the Contractor's employees and other persons carrying out the Contract. The Contractor shall not permit employment of unfit persons or persons not skilled in tasks assigned to them.

3.6 The Contractor warrants to the Owner that materials and equipment furnished will be new and of good quality, unless otherwise permitted, and that the work will be free from defects and in conformance with the Contract Documents. Work not conforming to these requirements, including substitutions not properly approved, may be considered defective. If required by the Owner, the Contractor shall furnish evidence as to the kind and quality of materials and equipment provided.

3.7 Unless otherwise provided, the Contractor shall pay all sales, consumer, use and other similar taxes, and shall secure and pay for required permits, fees, licenses, and inspections necessary for proper execution of the Work.

3.8 The Contractor shall comply with and give notices required by laws, ordinances, rules, regulations, and lawful orders of public authorities bearing on performance of the Work. The Contractor shall promptly notify the Owner if the Drawings and Specifications are observed to be at variance therewith.

3.9 The Contractor shall be responsible to the Owner for the acts and omissions of the Contractor's employees, Subcontractors and their agents and employees, and other persons performing portions of the Work under contract with the Contractor.

3.10 The Contractor shall keep the premises and surrounding area free from accumulation of waste materials or rubbish caused by operations under the Contract. At completion of the Work, the Contractor shall remove from and about the Project, all waste materials, rubbish, the Contractor's tools, construction equipment, machinery and surplus materials. The Contractor shall be responsible for returning all damaged areas to their original conditions.

3.11 STATE LICENSE AND TAX REQUIREMENTS

3.11.1 Each Contractor and Subcontractor shall be licensed to do business in the State of Delaware and shall pay all fees and taxes due under State laws. In conformance with Section 2503, Chapter 25, Title 30, Delaware Code, "the Contractor shall furnish the Delaware Department of Finance within ten (10) days after entering into any contract with a contractor or subcontractor not a resident of this State, a statement of total value of such contract or contracts together with the names and addresses of the contracting parties."

3.12. The Contractor shall comply with all requirements set forth in Section 6962, Chapter 69, Title 29, of the Delaware Code.

ARTICLE 4: ADMINISTRATION OF THE CONTRACT

4.1 CONTRACT SURETY

4.1.1 PERFORMANCE BOND AND LABOR AND MATERIAL PAYMENT BOND

NOT FOR BIDDING

4.1.2 All bonds will be required, as follows, unless specifically waived elsewhere in the Bidding Documents.

4.1.3 Contents of Performance Bonds – The bond shall be in the form approved by the Office of Management and Budget. The bond shall be conditioned upon the faithful compliance and performance by the successful bidder of each and every term and condition of the contract and the proposal, plans, specifications, and bid documents thereof. Each term and condition shall be met at the time and in the manner prescribed by the Contract, Bid documents and the specifications, including the payment in full to every person furnishing material or performing labor in the performance of the Contract, of all sums of money due the person for such labor and material. (The bond shall also contain the successful bidder's guarantee to indemnify and save harmless the State and the agency from all costs, damages and expenses growing out of or by reason of the Contract in accordance with the Contract.)

4.1.4 Invoking a Performance Bond – The agency may, when it considers that the interest of the State so require, cause judgement to be confessed upon the bond.

4.1.5 Within twenty (20) days after the date of notice of award of contract, the Bidder to whom the award is made shall furnish a Performance Bond and Labor and Material Payment Bond, each equal to the full amount of the Contract price to guarantee the faithful performance of all terms, covenants and conditions of the same. The bonds are to be issued by an acceptable Bonding Company licensed to do business in the State of Delaware and shall be issued in <u>duplicate</u>.

4.1.6 Performance and Payment Bonds shall be maintained in full force (warranty bond) for a period of two (2) years after the date of the Certificate for Final Payment. The Performance Bond shall guarantee the satisfactory completion of the Project and that the Contractor will make good any faults or defects in his work, which may develop during the period of said guarantees as a result of improper or defective workmanship, material or apparatus, whether furnished by themselves or their Sub-Contractors. The Payment Bond shall guarantee that the Contractor shall pay in full all persons, firms or corporations who furnish labor or material or both labor and material for, or on account of, the work included herein. The bonds shall be paid for by this Contractor. The Owner shall have the right to demand that the proof parties signing the bonds are duly authorized to do so.

4.2 FAILURE TO COMPLY WITH CONTRACT

4.2.1 If any firm entering into a contract with the State, or Agency that neglects or refuses to perform or fails to comply with the terms thereof, the Agency which signed the Contract may terminate the Contract and proceed to award a new contract in accordance with this Chapter 69, Title 29 of the Delaware Code or may require the Surety on the Performance Bond to complete the Contract in accordance with the terms of the Performance Bond. Nothing herein shall preclude the Agency from pursing additional remedies as otherwise provided by law.

4.3 CONTRACT INSURANCE AND CONTRACT LIABILITY

4.3.1 In addition to the bond requirements stated in the Bid Documents, each successful Bidder shall purchase adequate insurance for the performance of the Contract and, by submission of a Bid, agrees to indemnify and save harmless and to defend all legal or equitable actions brought against the State, any Agency, officer and/or employee of the State, for and from all claims of liability which is or may be the result of the successful Bidder's actions during the performance of the Contract.

NOT FOR BIDDING

4.3.2 The purchase or nonpurchase of such insurance or the involvement of the successful Bidder in any legal or equitable defense of any action brought against the successful Bidder based upon work performed pursuant to the Contract, will not waive any defense which the State, its agencies and their respective officers, employees and agents might otherwise have against such claims, specifically including the defense of sovereign immunity, where applicable, and by the terms of this section, the State and all agencies, officers and employees thereof shall not be financially responsible for the consequences of work performed, pursuant to said contract.

4.4 RIGHT TO AUDIT RECORDS

4.4.1 The Owner shall have the right to audit the books and records of a Contractor or any Subcontractor under any Contract or Subcontract to the extent that the books and records relate to the performance of the Contract or Subcontract.

4.4.2 Said books and records shall be maintained by the Contractor for a period of seven (7) years from the date of final payment under the Prime Contract and by the Subcontractor for a period of seven (7) years from the date of final payment under the Subcontract.

ARTICLE 5: SUBCONTRACTORS

5.1 SUBCONTRACTING REQUIREMENTS

5.1.1 All contracts for the construction, reconstruction, alteration or repair of any public building (not a road, street or highway) shall be subject to the following provisions:

1. A contract shall be awarded only to a Bidder whose Bid is accompanied by a statement containing, for each Subcontractor category, the name and address (city or town and state only – street number and P.O. Box addresses not required) of the subcontractor, whose services the Bidder intends to use in performing the work and providing the material for such Subcontractor category.

2. A Bid will not be accepted nor will an award of any Contract be made to any Bidder which, as a Prime Contractor, has listed itself as the Subcontractor for any Subcontractor unless:

   A. It has been established to the satisfaction of the awarding Agency that the Bidder has customarily performed the specialty work of such Subcontractor category by artisans regularly employed by the Bidder's firm;

   B. That the Bidder is duly licensed by the State to engage in such specialty work, if the State requires licenses; and

   C. That the Bidder is recognized in the industry as a bona fide Subcontractor or Contractor in such specialty work and Subcontractor category.

5.1.2 The decision of the awarding Agency as to whether a Bidder who lists itself as the Subcontractor for a Subcontractor category shall be final and binding upon all Bidders, and no action of any nature shall lie against any awarding agency or its employees or officers because of its decision in this regard.

5.1.3 After such a Contract has been awarded, the successful Bidder shall not substitute another Subcontractor for any Subcontractor whose name was set forth in the statement, which accompanied the Bid without the written consent of the awarding Agency.

NOT FOR BIDDING

5.1.4 No Agency shall consent to any substitution of Subcontractors unless the Agency is satisfied that the Subcontractor whose name is on the Bidders accompanying statement:

A. Is unqualified to perform the work required;

B. Has failed to execute a timely reasonable Subcontract;

C. Has defaulted in the performance on the portion of the work covered by the Subcontract; or

D. Is no longer engaged in such business.

5.1.5 Should a Bidder be awarded a contract, such successful Bidder shall provide to the agency the taxpayer identification license numbers of such subcontractors. Such numbers shall be provided on the later of the date on which such subcontractor is required to be identified or the time the contract is executed. The successful Bidder shall provide to the agency to which it is contracting, within 30 days of entering into such public works contract, copies of all Delaware Business licenses of subcontractors and/or independent contractors that will perform work for such public works contract. However, if a subcontractor or independent contractor is hired or contracted more than 30 days after the Bidder entered the public works contract the Delaware Business license of such subcontractor or independent contractor shall be provided to the agency within 30 days of being contracted or hired.

5.2 PENALTY FOR SUBSTITUTION OF SUBCONTRACTORS

5.2.1 Should the Contractor fail to utilize any or all of the Subcontractors in the Contractor's Bid statement in the performance of the Work on the public bidding, the Contractor shall be penalized in the amount of (project specific amount*). The Agency may determine to deduct payments of the penalty from the Contractor or have the amount paid directly to the Agency. Any penalty amount assessed against the Contractor may be remitted or refunded, in whole or in part, by the Agency awarding the Contract, only if it is established to the satisfaction of the Agency that the Subcontractor in question has defaulted or is no longer engaged in such business. No claim for the remission or refund of any penalty shall be granted unless an application is filed within one year after the liability of the successful Bidder accrues. All penalty amounts assessed and not refunded or remitted to the contractor shall be reverted to the State.

*one (1) percent of contract amount not to exceed $10,000

5.3 ASBESTOS ABATEMENT

5.3.1 The selection of any Contractor to perform asbestos abatement for State-funded projects shall be approved by the Office of Management and Budget, Division of Facilities Management pursuant to Chapter 78 of Title 16.

5.4 STANDARDS OF CONSTRUCTION FOR THE PROTECTION OF THE PHYSICALLY HANDICAPPED

5.4.1 All Contracts shall conform with the standard established by the Delaware Architectural Accessibility Board unless otherwise exempted by the Board.

5.5 CONTRACT PERFORMANCE

5.5.1 Any firm entering into a Public Works Contract that neglects or refuses to perform or fails to comply with its terms, the Agency may terminate the Contract and proceed to award a new Contract or may require the Surety on the Performance Bond to complete the Contract in accordance with the terms of the Performance Bond.

NOT FOR BIDDING

ARTICLE 6: CONSTRUCTION BY OWNER OR SEPARATE CONTRACTORS

6.1 The Owner reserves the right to simultaneously perform other construction or operations related to the Project with the Owner's own forces, and to award separate contracts in connection with other portions of the Project or other Projects at the same site.

6.2 The Contractor shall afford the Owner and other Contractors reasonable opportunity for access and storage of materials and equipment, and for the performance of their activities, and shall connect and coordinate their activities with other forces as required by the Contract Documents.

ARTICLE 7: CHANGES IN THE WORK

7.1 The Owner, without invalidating the Contract, may order changes in the Work consisting of Additions, Deletions, Modifications or Substitutions, with the Contract Sum and Contract completion date being adjusted accordingly. Such changes in the Work shall be authorized by written Change Order signed by the Professional, as the duly authorized agent, the Contractor and the Owner.

7.2 The Contract Sum and Contract Completion Date shall be adjusted only by a fully executed Change Order.

7.3 The additional cost, or credit to the Owner resulting from a change in the Work shall be by mutual agreement of the Owner, Contractor and the Architect. In all cases, this cost or credit shall be based on the 'DPE' wages required and the "invoice price" of the materials/equipment needed.

7.3.1 "DPE" shall be defined to mean "direct personnel expense". Direct payroll expense includes direct salary plus customary fringe benefits (prevailing wage rates) and documented statutory costs such as workman's compensation insurance, Social Security/Medicare, and unemployment insurance (a maximum multiplier of 1.35 times DPE).

7.3.2 "Invoice price" of materials/equipment shall be defined to mean the actual cost of materials and/or equipment that is paid by the Contractor, (or subcontractor), to a material distributor, direct factory vendor, store, material provider, or equipment leasing entity. Rates for equipment that is leased and/or owned by the Contractor or subcontractor(s) shall not exceed those listed in the latest version of the "Means Building Construction Cost Data" publication.

7.3.3 In addition to the above, the General Contractor is allowed a fifteen percent (15%) markup for overhead and profit for additional work performed by the General Contractor's own forces. For additional subcontractor work, the subcontractor is allowed a fifteen (15) percent overhead and profit on change order work above and beyond the direct costs stated previously. To this amount, the General Contractor will be allowed a mark-up not exceeding seven and one half percent (7.5%) on the subcontractors work. These mark-ups shall include all costs including, but not limited to: overhead, profit, bonds, insurance, supervision, etc. No markup is permitted on the work of the subcontractor's subcontractor. No additional costs shall be allowed for changes related to the Contractor's onsite superintendent/staff, or project manager, unless a change in the work changes the project duration and is identified by the CPM schedule. There will be no other costs associated with the change order.

ARTICLE 8: TIME

8.1 Time limits, if any, are as stated in the Project Manual. By executing the Agreement, the Contractor confirms that the stipulated limits are reasonable, and that the Work will be completed within the anticipated time frame.

NOT FOR BIDDING

8.2 If progress of the Work is delayed at any time by changes ordered by the Owner, by labor disputes, fire, unusual delay in deliveries, abnormal adverse weather conditions, unavoidable casualties or other causes beyond the Contractor's control, the Contract Time shall be extended for such reasonable time as the Owner may determine.

8.3 Any extension of time beyond the date fixed for completion of the construction and acceptance of any part of the Work called for by the Contract, or the occupancy of the building by the Owner, in whole or in part, previous to the completion shall not be deemed a waiver by the Owner of his right to annul or terminate the Contract for abandonment or delay in the matter provided for, nor relieve the Contractor of full responsibility.

8.4 SUSPENSION AND DEBARMENT

8.4.1 Per Section 6962(d)(14), Title 29, Delaware Code, "Any Contractor who fails to perform a public works contract or complete a public works project within the time schedule established by the Agency in the Invitation To Bid, may be subject to Suspension or Debarment for one or more of the following reasons: a) failure to supply the adequate labor supply ratio for the project; b) inadequate financial resources; or, c) poor performance on the Project."

8.4.2 "Upon such failure for any of the above stated reasons, the Agency that contracted for the public works project may petition the Director of the Office of Management and Budget for Suspension or Debarment of the Contractor. The Agency shall send a copy of the petition to the Contractor within three (3) working days of filing with the Director. If the Director concludes that the petition has merit, the Director shall schedule and hold a hearing to determine whether to suspend the Contractor, debar the Contractor or deny the petition. The Agency shall have the burden of proving, by a preponderance of the evidence, that the Contractor failed to perform or complete the public works project within the time schedule established by the Agency and failed to do so for one or more of the following reasons: a) failure to supply the adequate labor supply ratio for the project; b) inadequate financial resources; or, c) poor performance on the project. Upon a finding in favor of the Agency, the Director may suspend a Contractor from Bidding on any project funded, in whole or in part, with public funds for up to 1 year for a first offense, up to 3 years for a second offense and permanently debar the Contractor for a third offense. The Director shall issue a written decision and shall send a copy to the Contractor and the Agency. Such decision may be appealed to the Superior Court within thirty (30) days for a review on the record."

8.5 RETAINAGE

8.5.1 Per Section 6962(d)(5) a.3, Title 29, Delaware Code: The Agency may at the beginning of each public works project establish a time schedule for the completion of the project. If the project is delayed beyond the completion date due to the Contractor's failure to meet their responsibilities, the Agency may forfeit, at its discretion, all or part of the Contractor's retainage.

8.5.2 This forfeiture of retainage also applies to the timely completion of the punchlist. A punchlist will only be prepared upon the mutual agreement of the Owner, Architect and Contractor. Once the punchlist is prepared, all three parties will by mutual agreement, establish a schedule for its completion. Should completion of the punchlist be delayed beyond the established date due to the Contractor's failure to meet their responsibilities, the Agency may hold permanently, at its discretion, all or part of the Contractor's retainage.

NOT FOR BIDDING

ARTICLE 9: PAYMENTS AND COMPLETION

9.1 APPLICATION FOR PAYMENT

9.1.1 Applications for payment shall be made upon AIA Document G702. There will be a five percent (5%) retainage on all Contractors' monthly invoices until completion of the project. This retainage may become payable upon receipt of all required closeout documentation, provided all other requirements of the Contract Documents have been met.

9.1.2 A date will be fixed for the taking of the monthly account of work done. Upon receipt of Contractor's itemized application for payment, such application will be audited, modified, if found necessary, and approved for the amount. Statement shall be submitted to the Owner.

9.1.3 Section 6516, Title 29 of the Delaware Code annualized interest is not to exceed 12% per annum beginning thirty (30) days after the "presentment" (as opposed to the date) of the invoice.

9.2 PARTIAL PAYMENTS

9.2.1 Any public works Contract executed by any Agency may provide for partial payments at the option of the Owner, with respect to materials placed along or upon the sites or stored at secured locations, which are suitable for use in the performance of the contract.

9.2.2 When approved by the agency, partial payment may include the values of tested and acceptable materials of a nonperishable or noncontaminative nature, which have been produced or furnished for incorporation, as a permanent part of the work yet to be completed, provided acceptable provisions have been made for storage.

9.2.2.1 Any allowance made for materials on hand will not exceed the delivered cost of the materials as verified by invoices furnished by the Contractor, nor will it exceed the contract bid price for the material complete in place.

9.2.3 If requested by the Agency, receipted bills from all Contractors, Subcontractors, and material, men, etc., for the previous payment must accompany each application for payment. Following such request, no payment will be made until these receipted bills have been received by the Owner.

9.3 SUBSTANTIAL COMPLETION

9.3.1 When the building has been made suitable for occupancy, but still requires small items of miscellaneous work, the Owner will determine the date when the project has been substantially completed.

9.3.2 If, after the work has been substantially completed, full completion thereof is materially delayed through no fault of the Contractor, and without terminating the Contract, the Owner may make payment of the balance due for the portion of the Work fully completed and accepted. Such payment shall be made under the terms and conditions governing final payment that it shall not constitute a waiver of claims.

9.3.3 On projects where commissioning is included, the commissioning work as defined in the specifications must be complete prior to the issuance of substantial completion.

NOT FOR BIDDING

9.4 FINAL PAYMENT

9.4.1 Final payment, including the five percent (5%) retainage if determined appropriate, shall be made within thirty (30) days after the Work is fully completed and the Contract fully performed and provided that the Contractor has submitted the following closeout documentation (in addition to any other documentation required elsewhere in the Contract Documents):

9.4.1.1 Evidence satisfactory to the Owner that all payrolls, material bills and other indebtedness connected with the work have been paid,

9.4.1.2 An acceptable RELEASE OF LIENS,

9.4.1.3 Copies of all applicable warranties,

9.4.1.4 As-built drawings,

9.4.1.5 Operations and Maintenance Manuals,

9.4.1.6 Instruction Manuals,

9.4.1.7 Consent of Surety to final payment,

9.4.1.8 The Owner reserves the right to retain payments, or parts thereof, for its protection until the foregoing conditions have been complied with, defective work corrected and all unsatisfactory conditions remedied.

ARTICLE 10: PROTECTION OF PERSONS AND PROPERTY

10.1 The Contractor shall be responsible for initiating, maintaining, and supervising all safety precautions and programs in connection with the performance of the Contract. The Contractor shall take all reasonable precautions to prevent damage, injury or loss to: workers, persons nearby who may be affected, the Work, materials and equipment to be incorporated, and existing property at the site or adjacent thereto. The Contractor shall give notices and comply with applicable laws ordinances, rules, regulations, and lawful orders of public authorities bearing on the safety of persons and property and their protection from injury, damage, or loss. The Contractor shall promptly remedy damage and loss to property at the site caused in whole or in part by the Contractor, a Subcontractor, or anyone directly or indirectly employed by any of them, or by anyone for whose acts they may be liable.

10.2 The Contractor shall notify the Owner in the event any existing hazardous material such as lead, PCBs, asbestos, etc., is encountered on the project. The Owner will arrange with a qualified specialist for the identification, testing, removal, handling and protection against exposure or environmental pollution, to comply with applicable regulation laws and ordinances. The Contractor and Architect will not be required to participate in or to perform this operation. Upon completion of this work, the Owner will notify the Contractor and Architect in writing, the area has been cleared and approved by the authorities in order for the work to proceed. The Contractor shall attach documentation from the authorities of said approval.

10.3 As required in the Hazardous Chemical Information Act of June 1984, all vendors supplying any materials that may be defined as hazardous, must provide Material Safety Data Sheets for those products. Any chemical product should be considered hazardous if it has a warning caution on the label relating to a potential physical or health hazard, if it is known to be present in the work place, and if employees may be exposed under normal conditions or in any foreseeable emergency situation. Material Safety Data Sheets <u>must</u> be provided <u>directly to the Owner</u> along with the shipping slips that include those products.

NOT FOR BIDDING

10.4 The Contractor shall certify to the Owner that materials incorporated into the Work are free of all asbestos. This certification may be in the form of Material Safety Data Sheet (MSDS) provided by the product manufacturer for the materials used in construction, as specified or as provided by the Contractor.

ARTICLE 11: INSURANCE AND BONDS

11.1 The Contractor shall carry all insurance required by law, such as Unemployment Insurance, etc. The Contractor shall carry such insurance coverage as they desire on their own property such as a field office, storage sheds or other structures erected upon the project site that belong to them and for their own use. The Subcontractors involved with this project shall carry whatever insurance protection they consider necessary to cover the loss of any of their personal property, etc.

11.2 Upon being awarded the Contract, the Contractor shall obtain a minimum of two (2) copies of all required insurance certificates called for herein, and submit one (1) copy of each certificate, to the Owner, within 20 days of contract award.

11.3 Bodily Injury Liability and Property Damage Liability Insurance shall, in addition to the coverage included herein, include coverage for injury to or destruction of any property arising out of the collapse of or structural injury to any building or structure due to demolition work and evidence of these coverages shall be filed with and approved by the Owner.

11.4 The Contractor's Property Damage Liability Insurance shall, in addition to the coverage noted herein, include coverage on all real and personal property in their care, custody and control damaged in any way by the Contractor or their Subcontractors during the entire construction period on this project.

11.5 Builders Risk (including Standard Extended Coverage Insurance) on the existing building during the entire construction period, shall not be provided by the Contractor under this contract. The Owner shall insure the existing building and all of its contents and all this new alteration work under this contract during entire construction period for the full insurable value of the entire work at the site. Note, however, that the Contractor and their Subcontractors shall be responsible for insuring building materials (installed and stored) and their tools and equipment whenever in use on the project, against fire damage, theft, vandalism, etc.

11.6 Certificates of the insurance company or companies stating the amount and type of coverage, terms of policies, etc., shall be furnished to the Owner, within 20 days of contract award.

11.7 The Contractor shall, at their own expense, (in addition to the above) carry the following forms of insurance:

11.7.1 <u>Contractor's Contractual Liability Insurance</u>

Minimum coverage to be:

Bodily Injury	$500,000	for each person
	$1,000,000	for each occurrence
	$1,000,000	aggregate
Property Damage	$500,000	for each occurrence
	$1,000,000	aggregate

NOT FOR BIDDING

11.7.2 Contractor's Protective Liability Insurance

Minimum coverage to be:

Bodily Injury	$500,000	for each person
	$1,000,000	for each occurrence
	$1,000,000	aggregate
Property Damage	$500,000	for each occurrence
	$500,000	aggregate

11.7.3 Automobile Liability Insurance

Minimum coverage to be:

Bodily Injury	$1,000,000	for each person
	$1,000,000	for each occurrence
Property Damage	$500,000	per accident

11.7.4 Prime Contractor's and Subcontractors' policies shall include contingent and contractual liability coverage in the same minimum amounts as 11.7.1 above.

11.7.5 Workmen's Compensation (including Employer's Liability):

11.7.5.1 Minimum Limit on employer's liability to be as required by law.

11.7.5.2 Minimum Limit for all employees working at one site.

11.7.6 Certificates of Insurance must be filed with the Owner guaranteeing fifteen (15) days prior notice of cancellation, non-renewal or any change in coverages and limits of liability shown, as included on certificates.

11.7.7 Social Security Liability

11.7.7.1 With respect to all persons at any time employed by or on the payroll of the Contractor or performing any work for or on their behalf, or in connection with or arising out of the Contractor's business, the Contractor shall accept full and exclusive liability for the payment of any and all contributions or taxes or unemployment insurance, or old age retirement benefits, pensions or annuities now or hereafter imposed by the Government of the United States and the State or political subdivision thereof, whether the same be measured by wages, salaries or other remuneration paid to such persons or otherwise.

11.7.7.2 Upon request, the Contractor shall furnish Owner such information on payrolls or employment records as may be necessary to enable it to fully comply with the law imposing the aforesaid contributions or taxes.

11.7.7.3 If the Owner is required by law to and does pay any and/or all of the aforesaid contributions or taxes, the Contractor shall forthwith reimburse the Owner for the entire amount so paid by the Owner.

NOT FOR BIDDING

ARTICLE 12: UNCOVERING AND CORRECTION OF WORK

12.1 The Contractor shall promptly correct Work rejected by the Owner or failing to conform to the requirements of the Contract Documents, whether observed before or after Substantial Completion and whether or not fabricated, installed or completed, and shall correct any Work found to be not in accordance with the requirements of the Contract Documents within a period of two years from the date of Substantial Completion, or by terms of an applicable special warranty required by the Contract Documents. The provisions of this Article apply to work done by Subcontractors, as well as, to Work done by direct employees of the Contractor.

12.2 At any time during the progress of the work, or in any case where the nature of the defects shall be such that it is not expedient to have them corrected, the Owner, at their option, shall have the right to deduct such sum, or sums, of money from the amount of the contract as they consider justified to adjust the difference in value between the defective work and that required under contract including any damage to the structure.

ARTICLE 13: MISCELLANEOUS PROVISIONS

13.1 CUTTING AND PATCHING

13.1.1 The Contractor shall be responsible for all cutting and patching. The Contractor shall coordinate the work of the various trades involved.

13.2 DIMENSIONS

13.2.1 All dimensions shown shall be verified by the Contractor by actual measurements at the project site. Any discrepancies between the drawings and specifications and the existing conditions shall be referred to the Owner for adjustment before any work affected thereby has been performed.

13.3 LABORATORY TESTS

13.3.1 Any specified laboratory tests of material and finished articles to be incorporated in the work shall be made by bureaus, laboratories or agencies approved by the Owner and reports of such tests shall be submitted to the Owner. The cost of the testing shall be paid for by the Contractor.

13.3.2 The Contractor shall furnish all sample materials required for these tests and shall deliver same without charge to the testing laboratory or other designated agency when and where directed by the Owner.

13.4 ARCHAEOLOGICAL EVIDENCE

13.4.1 Whenever, in the course of construction, any archaeological evidence is encountered on the surface or below the surface of the ground, the Contractor shall notify the authorities of the Delaware Archaeological Board and suspend work in the immediate area for a reasonable time to permit those authorities, or persons designated by them, to examine the area and ensure the proper removal of the archaeological evidence for suitable preservation in the State Museum.

13.5 GLASS REPLACEMENT AND CLEANING

13.5.1 The General Contractor shall replace without expense to the Owner all glass broken during the construction of the project. If job conditions warrant, at completion of the job the General Contractor shall have all glass cleaned and polished.

NOT FOR BIDDING

13.6 WARRANTY

13.6.1 For a period of two (2) years from the date of substantial completion, as evidenced by the date of final acceptance of the work, the contractor warrants that work performed under this contract conforms to the contract requirements and is free of any defect of equipment, material or workmanship performed by the contractor or any of his subcontractors or suppliers. However, manufacturer's warranties and guarantees, if for a period longer than two (2) years, shall take precedence over the above warranties. The contractor shall remedy, at his own expense, any such failure to conform or any such defect. The protection of this warranty shall be included in the Contractor's Performance Bond.

ARTICLE 14: TERMINATION OF CONTRACT

14.1 If the Contractor defaults or persistently fails or neglects to carry out the Work in accordance with the Contract Documents or fails to perform a provision of the Contract, the Owner, after seven days written notice to the Contractor, may make good such deficiencies and may deduct the cost thereof from the payment then or thereafter due the Contractor. Alternatively, at the Owner's option, and the Owner may terminate the Contract and take possession of the site and of all materials, equipment, tools, and machinery thereon owned by the Contractor and may finish the Work by whatever method the Owner may deem expedient. If the costs of finishing the Work exceed any unpaid compensation due the Contractor, the Contractor shall pay the difference to the Owner.

14.2 "If the continuation of this Agreement is contingent upon the appropriation of adequate state, or federal funds, this Agreement may be terminated on the date beginning on the first fiscal year for which funds are not appropriated or at the exhaustion of the appropriation. The Owner may terminate this Agreement by providing written notice to the parties of such non-appropriation. All payment obligations of the Owner will cease upon the date of termination. Notwithstanding the foregoing, the Owner agrees that it will use its best efforts to obtain approval of necessary funds to continue the Agreement by taking appropriate action to request adequate funds to continue the Agreement."

END OF GENERAL REQUIREMENTS

NOT FOR BIDDING

SECTION 011000 - SUMMARY

PART 1 - GENERAL

1.1 RELATED DOCUMENTS

A. Drawings and general provisions of the Contract, including General and Supplementary Conditions and other Division 01 Specification Sections, apply to this Section.

1.2 SUMMARY

A. Section Includes:

1. Project information.
2. Work covered by Contract Documents.
3. Work by Owner.
4. Work under separate contracts.
5. Future work.
6. Purchase contracts.
7. Owner-furnished products.
8. Access to site.
9. Coordination with occupants.
10. Work restrictions.
11. Specification and drawing conventions.
12. Miscellaneous provisions.

B. Related Requirements:

1. Section 015000 "Temporary Facilities and Controls" for limitations and procedures governing temporary use of Owner's facilities.

1.3 PROJECT INFORMATION

A. Project Identification: Killens Pond Waterpark Renovations – Phase 1.

1. Project Location: Killens Pond State Park, Kent County, Delaware.

B. Owner: Sate of Delaware, Department of Natural Resources and Environmental Control, Division of Parks and Recreation..

1. Owner's Representative: Cindy Todd.

C. Architect: Becker Morgan Group, Inc., 309 S. Governors Ave., Dover, Delaware.

D. Architect's Consultants: The Architect has retained the following design professionals who have prepared designated portions of the Contract Documents:

NOT FOR BIDDING

1. Allen and Shariff Engineering (Mech/Elec. Engineer), 1102 South DuPont Highway, Dover, Delaware.

2. Nyikos Associates (Food Services), 18205-A Flower Hill Way, Gaithersburg, Maryland.

3. Markey and Associates, Inc. (Pool Consultant), 4255 Edgewater Court NW, Kennesaw, Georgia.

1.4 WORK COVERED BY CONTRACT DOCUMENTS

A. The Work of Project is defined by the Contract Documents and consists of the following:

1. Site improvements and construction of new pool and slides, new pool equipment building, new concessions building, new bathhouse building and new entrance plaza with renovations to the existing main entrance building, including, but not limited to:
   a. Site clearing, grading, excavation, site utilities, storm water management facilities, fencing, concrete and asphalt paving, and landscaping
   b. Concrete, masonry, carpentry, roofing, drywall, doors and windows, hardware, and finishes.
   c. HVAC, plumbing, electrical, lighting, telecom, and alarms.
   d. Pool equipment and slides
   e. Food service equipment.

B. Type of Contract:

1. Project will be constructed under a single prime contract.

1.5 WORK UNDER SEPARATE CONTRACTS

A. General: Cooperate fully with separate contractors so work on those contracts may be carried out smoothly, without interfering with or delaying work under this Contract or other contracts. Coordinate the Work of this Contract with work performed under separate contracts.

B. Concurrent Work: Owner will award separate contract(s) for the following construction operations at Project site. Those operations will be conducted simultaneously with work under this Contract.

1. Security and Intrusion Systems.

1.6 ACCESS TO SITE

A. General: Contractor shall have full use of Project site for construction operations during construction period. Contractor's use of Project site is limited only by Owner's right to perform work or to retain other contractors on portions of Project.

B. General: Contractor shall have limited use of Project site for construction operations as indicated on Drawings by the Contract limits and as indicated by requirements of this Section.

NOT FOR BIDDING

C. Use of Site: Limit use of Project site to areas within the Contract limits indicated. Do not disturb portions of Project site beyond areas in which the Work is indicated.

1. Limits: Confine construction operations to areas within the Contract limits.
2. Driveways, Walkways and Entrances: Keep driveways parking garage, loading areas, and entrances serving premises clear and available to Owner, Owner's employees, and emergency vehicles at all times. Do not use these areas for parking or storage of materials.

   a. Schedule deliveries to minimize use of driveways and entrances by construction operations.
   b. Schedule deliveries to minimize space and time requirements for storage of materials and equipment on-site.
3. The waterpark facility will close operations for the season on September 13, 2015 and reopen for operations on May 28, 2016.

1.7 COORDINATION WITH OCCUPANTS

A. Full Owner Occupancy: Owner will occupy site and existing adjacent building(s) during entire construction period. Cooperate with Owner during construction operations to minimize conflicts and facilitate Owner usage. Perform the work so as not to interfere with Owner's day-to-day operations. Maintain existing exits unless otherwise indicated.

1. Maintain access to existing walkways, corridors, and other adjacent occupied or used facilities. Do not close or obstruct walkways, corridors, or other occupied or used facilities without written permission from Owner and approval of authorities having jurisdiction.
2. Notify Owner not less than 72 hours in advance of activities that will affect Owner's operations.

1.8 WORK RESTRICTIONS

A. Work Restrictions, General: Comply with restrictions on construction operations.

1. Comply with limitations on use of public streets and with other requirements of authorities having jurisdiction.

B. On-Site Work Hours: Limit work in the existing building to normal business working hours of 7:30 a.m. to 5:30 p.m., Monday through Friday, unless otherwise indicated.

1. Weekend Hours: Permitted with prior approval by Owner.
2. Early Morning Hours: Permitted with prior approval by Owner.

C. Existing Utility Interruptions: Do not interrupt utilities serving facilities occupied by Owner or others unless permitted under the following conditions and then only after providing temporary utility services according to requirements indicated:

1. Notify Owner not less than two days in advance of proposed utility interruptions.
2. Obtain Owner's written permission before proceeding with utility interruptions.

NOT FOR BIDDING

D. Noise, Vibration, and Odors: Coordinate operations that may result in high levels of noise and vibration, odors, or other disruption to Owner occupancy with Owner.

1. Notify Owner not less than two days in advance of proposed disruptive operations.
2. Obtain Owner's written permission before proceeding with disruptive operations.

E. Controlled Substances: Use of tobacco products and other controlled substances within the Killens Pond State Park is not permitted.

1.9 SPECIFICATION AND DRAWING CONVENTIONS

A. Specification Content: The Specifications use certain conventions for the style of language and the intended meaning of certain terms, words, and phrases when used in particular situations. These conventions are as follows:

1. Imperative mood and streamlined language are generally used in the Specifications. The words "shall," "shall be," or "shall comply with," depending on the context, are implied where a colon (:) is used within a sentence or phrase.
2. Specification requirements are to be performed by Contractor unless specifically stated otherwise.

B. Division 01 General Requirements: Requirements of Sections in Division 01 apply to the Work of all Sections in the Specifications.

C. Drawing Coordination: Requirements for materials and products identified on Drawings are described in detail in the Specifications. One or more of the following are used on Drawings to identify materials and products:

1. Terminology: Materials and products are identified by the typical generic terms used in the individual Specifications Sections.
2. Abbreviations: Materials and products are identified by abbreviations published as part of the U.S. National CAD Standard] [and] [scheduled on Drawings.
3. Keynoting: Materials and products are identified by reference keynotes referencing Specification Section numbers found in this Project Manual.

1.10 MISCELLANEOUS PROVISIONS

A. SCHEDULE

1. The following is the required schedule for this work:

a. Bids Due: September 22, 2015 @ 3:00 pm
b. Notice of Building Contract Award: Within thirty (30) days of receipt and acceptance of qualified low bid.
c. Purchase Order Issuance: The issuance of a State of Delaware purchase order is contingent upon the successful Contractor submitting bonds on State-approved forms, signed contracts and insurance certificates to the State of Delaware within 20 days of Notice of Award. A purchase order will be issued in approximately thirty days after these items have been submitted to the State of Delaware.

NOT FOR BIDDING

d. On-Site Mobilization: Upon receipt of State of Delaware purchase order.
e. Substantial Completion: The work shall be completed and all systems inspected and operations for opening to the public by May 27, 2016.
f. Completion of Punch List: 21 days from date of substantial completion.
   1) Refer to the General Requirements for additional details.

B. COMPLETION DATE

1. All work of this contract shall be completed within the time limit set out in Section 0110 00 (1.10.A.1) – Schedule.

C. FAILURE TO COMPLETE WORK ON TIME

1. For each calendar day or work day that work remains uncompleted after the Contract time has expired or beyond the completion date established by the Contract, the sum specified in Subsection 1.10 D will be deducted from any money due the Contractor. This sum shall not be considered and treated as a penalty but as liquidated damages due the Department by reason of inconvenience to the public, added cost of engineering and supervision, and other extra expenditures of public funds due to the Contractor's failure to complete the work on time. Any adjustment of the Contract time for completion of work granted will be considered in the assessment of liquidated damages.
2. The column indicated in the charts as "Calendar Day" will also be used in the assessment of liquidated damages for contracts with a predetermined completion date.
3. Computations for the assessment of liquidated damages shall be made in accordance with the daily computations described in the definition of working day, when the Contract is a working contract. On all other contracts each and every consecutive calendar day, including Saturdays, Sundays and holidays, shall be included in the computations for the assessment of liquidated damages.
4. The Contractor shall become liable for liquidated damages for delays commencing from the date on which the Contract time, as adjusted by Section 012500 – Contract Modification Procedures, shall expire.
5. If there is a delay in the delivery of critical materials, such as steel, copper, or aluminum, due to defense needs, energy crisis, etc. a time extension shall be allowed for such delays. Each case will be independently evaluated to determine if delays were, in fact, beyond the control of the Contractor or fabricator and delayed the Project completion. Satisfactory supported time extension requests shall be made concurrently with the delay and not after the fact.
6. Requests for time extensions shall be subject to review by the Engineer, and the Engineer will determine the amount of time extension allowed.
7. There will be no acceptance of unsupported claims of delays in delivery of material as a basis for time extensions. The Contractor is presumed to have included in its Contract price, allowance for any anticipated delays in procurement of materials, which procurement is its sole responsibility. Unless some unusual market condition such as an industrywide strike, natural disaster, or areawide storages arises after bids are taken and prevents procurement of materials within the allowable time limitations, delays in delivery of such materials do not provide sufficient reason for suspending time charges.
8. Permission for the Contractor or surety to continue and finish work after the Contract time and approved extensions have elapsed shall not waive the Department's rights under the Contract.

NOT FOR BIDDING

9. The Department may waive such portions of the liquidated damages as may accrue after the work is substantially complete and is in a condition for safe and convenient use by the traveling public.
10. Payment of liquidated damages will be deducted from payments otherwise due the Contractor or be made by direct payment by the Contractor in the event the total liquidated damages due exceed said deductions.

D. SCHEDULE OF LIQUIDATED DAMAGES

Awarded Contract Value		**Daily Change**	
Daily Change	**Daily Change**	**Daily Change**	**Daily Change**
For More Than---	To and including--	Work Day	Calendar Day
$ 0	$ 25,000	$ 380.00	$ 275.00
25,000	50,000	400.00	290.00
50,000	100,000	540.00	390.00
100,000	500,000	840.00	600.00
500,000	1,000,000	1,090.00	780.00
1,000,000	2,000,000	1,350.00	960.00
2,000,000	5,000,000	1,410.00	1,010.00
5,000,000	10,000,000	1,590.00	1,130.00
10,000,000	15,000,000	2,510.00	1,790.00
15,000,000	20,000,000	4,180.00	2,990.00
20,000,000	25,000,000	5,850.00	4,180.00
25,000,000	30,000,000	7,520.00	5,370.00
30,000,000	35,000,000	9,190.00	6,570.00
35,500,000	Over	10,870.00	7,760.00

PART 2 - PRODUCTS (Not Used)

PART 3 - EXECUTION (Not Used)

END OF SECTION 011000

NOT FOR BIDDING

SECTION 011400 - WORK RESTRICTIONS

PART 1 - GENERAL

1.1 RELATED DOCUMENTS

A. Drawings and general provisions of the Contract, including General and Supplementary Conditions and other Division 1 Specification Sections, apply to this section.

1.2 USE OF PREMISES

A. Use of Site: Limit use of premises to work in areas indicated. Do not disturb portions of site beyond areas in which the Work is indicated.

1. Limits: Confine construction operations to the limits indicated on the drawings. Do not disturb areas to remain occupied during the renovations.
2. Owner Occupancy: The "Waterpark" facility is part of the State Park, which remains open to the public year-round. The "Waterpark" facility is currently occupied and open to the public. The facility will be closed and winterized prior to the start of construction. However, the Owner will be partially occupying the facility during the renovation process, primarily for maintenance purposes. The surrounding occupied areas, site, buildings, roadways, access into the buildings, etc. beyond the work area shall remain accessible to the Owner and to the Public. The "Waterpark" facility will reopen to the public on May 28, 2016, if any construction activities continue beyond that date, the Contractor shall provide adequate protection so the Owner can partially occupy the facility for its intended use and operate to the public.
3. Parking: The existing main parking lot can be used for worker parking, staging area, trailers, etc. However, the main parking lot will need to be vacated prior to the reopening of the facility in May 28, 2016 so the Owner can occupy and operate the facility.
4. Dumpster: The Owner will coordinate the location of the dumpster(s) with the Contractor. The dumpster shall be covered to avoid windblown debris. Debris shall be removed on a regular basis in order to avoid an overflowing dumpster. Restoration of grounds disturbed by the dumpster will be required upon completion of the Project. "No Trespassing" signs shall be placed on the dumpster.
5. Access: Access to the Water Park will be through the Park's main gate located on Killens Pond Road.
6. Storage: The existing main parking lot can be used for staging and storage of materials until the "waterpark" facility reopens on May 28, 2016. However, the main parking lot will need to be vacated prior to the reopening of the facility in May 28, 2016 so the Owner can occupy and operate the facility.
7. Public Roadways, Driveways, Entrances and Public Sidewalks: Keep public roadways, driveways, entrances and public sidewalks serving premises clear and available to the Public, Owner, Owner's employees and emergency vehicles at all times. Do not use these areas for parking or storage of materials.

    a. Schedule deliveries to minimize use of roadways, driveways, sidewalks and entrances.
    b. The Owner will not sign for any deliveries at any time.
    c. Schedule deliveries to minimize space and time requirements for storage of materials and equipment on-site.

NOT FOR BIDDING

B. Use of Existing Building: Maintain the existing building in a weathertight condition throughout renovation period. Repair damage caused by construction operations. Protect building and its contents during construction period.

1. The Contractor shall be provided full access to the "Waterpark" facility as necessary to complete the work. A security code and/or keys shall will be provided to the Contractor.
2. Use of the Owner's telephones will not be allowed.
3. Flammable materials shall not be stored in the "waterpark" facility. Flammable materials shall be kept outside, away from all buildings, in a flammable liquid/material storage box.
4. Gas powered equipment will not be allowed in the buildings or near windows and intake louvers at any time.
5. Debris shall be removed from and around the "waterpark" facility including the sidewalks, trails and parking areas on a daily basis.
6. At no times shall equipment be left operating in and around "waterpark" facility after hours or when no one is present in the building.
7. Noisy activities shall take place during the hours defined by Kent County and the Owner and prescheduled with the Owner to avoid disruption of their activities.
8. Access to water will be provided, the contractor will be responsible for any modifications needed for temporary connection to the existing system and returning it to its original condition when complete.
9. There will be no restroom facilities available during construction, since the facility will be winterized at that time. The Contractor shall provide a self-contained toilet unit securely attached to the ground and kept locked after hours.
10. Access to electric power will be provided, the contractor will be responsible for any modifications needed for temporary connection to the existing system and returning it to its original condition when complete.
11. Dogs or other animals shall not be brought onto the property at any time.
12. Children shall not be brought onto the site at any time.
13. The general surrounds of "waterpark" facility are open to the public and those working at the site shall not use abusive language.
14. Radios or other music-playing devices will not be allowed. Head phones and ear buds will not be allowed.
15. Fire extinguishers shall be kept in the areas under renovation at "waterpark" facility at all times.
16. All work taking place on the site shall be monitored by the contractor's project superintendent at all times even if the General Contractor's work forces are not working at the site.
17. The Project superintendant shall discuss weekly with the DNREC Project Manager to review the activities planned for that week to avoid miscommunication, facilitate the renovation process and to maintain the Owner's operations.
18. Provide protective barriers and covers at entrances and public access areas where work is taking place overhead.

PART 2 - PRODUCTS (Not Used)

PART 3 - EXECUTION (Not Used)

END OF SECTION 011400

NOT FOR BIDDING

SECTION 012100 - ALLOWANCES

PART 1 - GENERAL

1.1 RELATED DOCUMENTS

A. Drawings and general provisions of the Contract, including General and Supplementary Conditions and other Division 01 Specification Sections, apply to this Section.

1.2 SUMMARY

A. Section includes administrative and procedural requirements governing allowances.

1. Certain items are specified in the Contract Documents by allowances. Allowances have been established in lieu of additional requirements and to defer selection of actual materials and equipment to a later date when direction will be provided to Contractor. If necessary, additional requirements will be issued by Change Order.

B. Types of allowances include the following:

1. Lump-sum allowances.
2. Contingency allowances.

C. Related Requirements:

1. Section 012200 "Unit Prices" for procedures for using unit prices.
2. Section 014000 "Quality Requirements" for procedures governing the use of allowances for testing and inspecting.

1.3 SELECTION AND PURCHASE

A. At the earliest practical date after award of the Contract, advise Architect of the date when final selection and purchase of each product or system described by an allowance must be completed to avoid delaying the Work.

B. At Architect's request, obtain proposals for each allowance for use in making final selections. Include recommendations that are relevant to performing the Work.

C. Purchase products and systems selected by Architect from the designated supplier.

1.4 ACTION SUBMITTALS

A. Submit proposals for purchase of products or systems included in allowances, in the form specified for Change Orders.

NOT FOR BIDDING

1.5 INFORMATIONAL SUBMITTALS

A. Submit invoices or delivery slips to show actual quantities of materials delivered to the site for use in fulfillment of each allowance.

B. Submit time sheets and other documentation to show labor time and cost for installation of allowance items that include installation as part of the allowance.

C. Coordinate and process submittals for allowance items in same manner as for other portions of the Work.

1.6 COORDINATION

A. Coordinate allowance items with other portions of the Work. Furnish templates as required to coordinate installation.

1.7 LUMP-SUM ALLOWANCES

A. Allowance shall include cost to Contractor of specific products and materials ordered by Owner or selected by Architect under allowance and shall include [**taxes,**]freight[**,**] and delivery to Project site.

B. Unless otherwise indicated, Contractor's costs for receiving and handling at Project site, labor, installation, overhead and profit, and similar costs related to products and materials under allowance shall be included as part of the Contract Sum and not part of the allowance.

C. Unused Materials: Return unused materials purchased under an allowance to manufacturer or supplier for credit to Owner, after installation has been completed and accepted.

1. If requested by Architect, retain and prepare unused material for storage by Owner. Deliver unused material to Owner's storage space as directed.

1.8 CONTINGENCY ALLOWANCES

A. Use the contingency allowance only as directed by Architect for Owner's purposes and only by Change Orders that indicate amounts to be charged to the allowance.

B. Contractor's overhead, profit, and related costs for products and equipment ordered by Owner under the contingency allowance are included in the allowance and are not part of the Contract Sum. These costs include delivery, installation, insurance, equipment rental, and similar costs.

C. Change Orders authorizing use of funds from the contingency allowance will include Contractor's actual costs and reasonable overhead and profit margins.

D. At Project closeout, credit unused amounts remaining in the contingency allowance to Owner by Change Order.

NOT FOR BIDDING

1.9 ADJUSTMENT OF ALLOWANCES

A. Allowance Adjustment: To adjust allowance amounts, prepare a Change Order proposal based on the difference between purchase amount and the allowance, multiplied by final measurement of work-in-place where applicable. If applicable, include reasonable allowances for cutting losses, tolerances, mixing wastes, normal product imperfections, and similar margins.

1. Include installation costs in purchase amount only where indicated as part of the allowance.
2. If requested, prepare explanation and documentation to substantiate distribution of overhead costs and other margins claimed.
3. Submit substantiation of a change in scope of work, if any, claimed in Change Orders related to unit-cost allowances.
4. Owner reserves the right to establish the quantity of work-in-place by independent quantity survey, measure, or count.

B. Submit claims for increased costs because of a change in scope or nature of the allowance described in the Contract Documents, whether for the purchase order amount or Contractor's handling, labor, installation, overhead, and profit.

1. Do not include Contractor's or subcontractor's indirect expense in the Change Order cost amount unless it is clearly shown that the nature or extent of work has changed from what could have been foreseen from information in the Contract Documents.
2. No change to Contractor's indirect expense is permitted for selection of higher- or lower-priced materials or systems of the same scope and nature as originally indicated.

PART 2 - PRODUCTS (Not Used)

PART 3 - EXECUTION

3.1 EXAMINATION

A. Examine products covered by an allowance promptly on delivery for damage or defects. Return damaged or defective products to manufacturer for replacement.

3.2 PREPARATION

A. Coordinate materials and their installation for each allowance with related materials and installations to ensure that each allowance item is completely integrated and interfaced with related work.

NOT FOR BIDDING

3.3 SCHEDULE OF ALLOWANCES

A. Allowance No. 1: Lump-Sum Allowance: Include the sum of $10,000 for four (4) foundations for the Ticketing Pavilion. Final engineering is Designated Design by the pavilion manufacturer.

1. This allowance includes excavation, forming, setting anchor bolts, concrete, reinforcing, finishing and backfill and all material cost, receiving, handling, and installation, and Contractor overhead and profit.

B. Allowance No. 2: Lump-Sum Allowance: Include the sum of $12,000 for four (4) foundations for the Queuing Pavilion. Final engineering is Designated Design by the pavilion manufacturer.

1. This allowance includes excavation, forming, setting anchor bolts, concrete, reinforcing, finishing and backfill and all material cost, receiving, handling, and installation, and Contractor overhead and profit.

C. Allowance No. 3: Lump-Sum Allowance: Include the sum of $50,000 for bollards associated with the new entrance plaza..

1. This allowance includes excavation, forming, setting anchor bolts, concrete, reinforcing, finishing and backfill and all material cost, receiving, handling, and installation, and Contractor overhead and profit.

D. Allowance No. 4: Contingency Allowance: Include a contingency allowance of $20,000.00 for use according to Owner's written instructions.

END OF SECTION 012100

NOT FOR BIDDING

SECTION 012200 - UNIT PRICES

PART 1 - GENERAL

1.1 RELATED DOCUMENTS

A. Drawings and general provisions of the Contract, including General and Supplementary Conditions and other Division 01 Specification Sections, apply to this Section.

1.2 SUMMARY

A. Section includes administrative and procedural requirements for unit prices.

B. Related Requirements:

1. Section 012600 "Contract Modification Procedures" for procedures for submitting and handling Change Orders.
2. Section 014000 "Quality Requirements" for general testing and inspecting requirements.

1.3 DEFINITIONS

A. Unit price is an amount incorporated in the Agreement, applicable during the duration of the Work as a price per unit of measurement for materials, equipment, or services, or a portion of the Work, added to or deducted from the Contract Sum by appropriate modification, if the scope of Work or estimated quantities of Work required by the Contract Documents are increased or decreased.

1.4 PROCEDURES

A. Unit prices include all necessary material, plus cost for delivery, installation, insurance, overhead, and profit.

B. Measurement and Payment: See individual Specification Sections for work that requires establishment of unit prices. Methods of measurement and payment for unit prices are specified in those Sections.

C. Owner reserves the right to reject Contractor's measurement of work-in-place that involves use of established unit prices and to have this work measured, at Owner's expense, by an independent surveyor acceptable to Contractor.

D. List of Unit Prices: A schedule of unit prices is included in Part 3. Specification Sections referenced in the schedule contain requirements for materials described under each unit price.

NOT FOR BIDDING

PART 2 - PRODUCTS (Not Used)

PART 3 - EXECUTION

3.1 SCHEDULE OF UNIT PRICES

A. Unit Price 1: Removal of unsatisfactory soil and replacement with satisfactory soil material.

1. Description: Unsatisfactory soil excavation and disposal off site and replacement with satisfactory fill material or engineered fill from off site, as required, according to Section 312000 "Earth Moving."
2. Unit of Measurement: Cubic yard of soil excavated, based on survey of volume removed.

B. Unit Price No. 2: Cutting and patching of concrete floor slabs and concrete pool decking.

1. Description: Cutting of new or existing concrete slabs and/or concrete pool decking up to 6 inches (152 mm) thick, removal and excavation as required, and subsequent backfill, compaction, and patching of concrete according to Section 017300 "Execution." not otherwise indicated in the Contract Documents.
2. Unit of Measurement: Square feet of concrete floor removed.

C. Unit Price No. 3: Additional concrete pool deck.

1. Description: Additional concrete pool deck, including, but not limited to; site preparation, sub-base, concrete slab, reinforcing, expansion control, per drawings and specs.
2. Unit of Measurement: Square feet of concrete pool deck.

D. Unit Price No. 4: Concrete pool deck coating.

1. Description: Provide pool deck coating, per specifications, for additional areas of concrete pool deck, including any required preparation work needed to accommodate the application of the deck coating.
2. Unit of Measurement: Square feet of concrete pool deck coating, minimum area of 500 square feet.

E. Unit Price No. 5: Structural concrete footers/foundations for Pre-fabricated Pavilions.

1. Description: Provide additional excavate, prepare subgrade, provide and install reinforcement and provide and install concrete footings. Steel reinforcement up to 100 #/ CY.
2. Unit of Measurement: Cubic yard.

END OF SECTION 012200

NOT FOR BIDDING

SECTION 012300 - ALTERNATES

PART 1 - GENERAL

1.1 RELATED DOCUMENTS

A. Drawings and general provisions of the Contract, including General and Supplementary Conditions and other Division 01 Specification Sections, apply to this Section.

1.2 SUMMARY

A. Section includes administrative and procedural requirements for alternates.

1.3 DEFINITIONS

A. Alternate: An amount proposed by bidders and stated on the Bid Form for certain work defined in the bidding requirements that may be added to or deducted from the base bid amount if Owner decides to accept a corresponding change either in the amount of construction to be completed or in the products, materials, equipment, systems, or installation methods described in the Contract Documents.

1. Alternates described in this Section are part of the Work only if enumerated in the Agreement.
2. The cost or credit for each alternate is the net addition to or deduction from the Contract Sum to incorporate alternate into the Work. No other adjustments are made to the Contract Sum.

1.4 PROCEDURES

A. Coordination: Revise or adjust affected adjacent work as necessary to completely integrate work of the alternate into Project.

1. Include as part of each alternate, miscellaneous devices, accessory objects, and similar items incidental to or required for a complete installation whether or not indicated as part of alternate.

B. Notification: Immediately following award of the Contract, notify each party involved, in writing, of the status of each alternate. Indicate if alternates have been accepted, rejected, or deferred for later consideration. Include a complete description of negotiated revisions to alternates.

C. Execute accepted alternates under the same conditions as other work of the Contract.

D. Schedule: A schedule of alternates is included at the end of this Section. Specification Sections referenced in schedule contain requirements for materials necessary to achieve the work described under each alternate.

NOT FOR BIDDING

PART 2 - PRODUCTS (Not Used)

PART 3 - EXECUTION

3.1 SCHEDULE OF ALTERNATES

A. Alternate No. 01: New Pool Equipment Building Roofing.

1. Base Bid: Asphalt shingle roofing.
2. Alternate: Provide standing seam metal roofing in lieu of asphalt shingle roofing.

B. Alternate No. 01A: Speed Slide.

1. Base Bid: All equipment, piping and underground work, and tower associated the speed slide as well as the entire body-slides components (Flumes A & B and tower).
2. Alternate: Furnish and install the speed slide flumes C & D and associated foundations, engineering, etc., see drawings.

C. Alternate No. 01B: Existing Waterpark Entrance Building toilet room renovations.

1. Base Bid: None.
2. Alternate: Renovate the male and female ADA toilet stalls to meet current ADA codes, as indicated on the drawings.

D. Alternate No. 02: New Waterpark Entrance Plaza.

1. Base Bid: None.
2. Alternate: Provide improvements to the waterpark entrance plaza including ticket booths, fence/gates, paving, and associated utilities, and as indicated on the drawings.

E. Alternate No. 02A: New Waterpark Entrance Plaza Queuing Pavilion.

1. Base Bid: None.
2. Alternate: Provide improvements to the waterpark entrance plaza including new queuing sunshade pavilion, paving, bollards, and associated utilities, and as indicated on the drawings.

F. Alternate No. 02B: New Waterpark Entrance Plaza Ticketing Pavilion.

1. Base Bid: None.
2. Alternate: Provide improvements to the waterpark entrance plaza including new ticketing sunshade pavilion, and associated utilities, and as indicated on the drawings.

G. Alternate No. 03: Existing Waterpark Entrance Building renovations.

1. Base Bid: None.
2. Alternate: Provide renovations to the waterpark main entrance building as indicated on the drawings.

H. Alternate No. 04: New Concession/Retail Building.

NOT FOR BIDDING

1. Base Bid: None.
2. Alternate: Provide new Concession/Retail Building and associated site improvements, dumpster enclosure, utilities, and as indicated on the drawings. Provide work associated with the relocated of the current concession area in the existing pool mechanical building to the new building, and minor renovation work as indicated on the drawings.

I. Alternate No. 04A: New Concession/Retail Building Roofing.

1. Base Bid: Asphalt shingle roofing.
2. Alternate: As alternate to Alternate 04, Provide standing seam metal roofing in lieu of asphalt shingle roofing.

J. Alternate No. 05: New Bathhouse Building.

1. Base Bid: None.
2. Alternate: Provide new Restroom Building and associated site improvements, utilities, and as indicated on the drawings.

K. Alternate No. 05A: New Bathhouse Building Roofing.

1. Base Bid: Asphalt shingle roofing.
2. Alternate: As alternate to Alternate 05, Provide standing seam metal roofing in lieu of asphalt shingle roofing.

END OF SECTION 012300

NOT FOR BIDDING

(PAGE LEFT BLANK)

NOT FOR BIDDING

SECTION 012500 - SUBSTITUTION PROCEDURES

PART 1 - GENERAL

1.1 RELATED DOCUMENTS

A. Drawings and general provisions of the Contract, including General and Supplementary Conditions and other Division 01 Specification Sections, apply to this Section.

1.2 SUMMARY

A. Section includes administrative and procedural requirements for substitutions.

B. Related Requirements:

1. Section 012300 "Alternates" for products selected under an alternate.
2. Section 016000 "Product Requirements" for requirements for submitting comparable product submittals for products by listed manufacturers.

1.3 DEFINITIONS

A. Substitutions: Changes in products, materials, equipment, and methods of construction from those required by the Contract Documents and proposed by Contractor.

1. Substitutions for Cause: Changes proposed by Contractor that are required due to changed Project conditions, such as unavailability of product, regulatory changes, or unavailability of required warranty terms.
2. Substitutions for Convenience: Changes proposed by Contractor or Owner that are not required in order to meet other Project requirements but may offer advantage to Contractor or Owner.

1.4 ACTION SUBMITTALS

A. Substitution Requests: Submit three copies of each request for consideration. Identify product or fabrication or installation method to be replaced. Include Specification Section number and title and Drawing numbers and titles.

1. Substitution Request Form: Use CSI Form 13.1A.
2. Documentation: Show compliance with requirements for substitutions and the following, as applicable:

a. Statement indicating why specified product or fabrication or installation cannot be provided, if applicable.
b. Coordination information, including a list of changes or revisions needed to other parts of the Work and to construction performed by Owner and separate contractors, that will be necessary to accommodate proposed substitution.

NOT FOR BIDDING

c. Detailed comparison of significant qualities of proposed substitution with those of the Work specified. Include annotated copy of applicable Specification Section. Significant qualities may include attributes such as performance, weight, size, durability, visual effect, sustainable design characteristics, warranties, and specific features and requirements indicated. Indicate deviations, if any, from the Work specified.
d. Product Data, including drawings and descriptions of products and fabrication and installation procedures.
e. Samples, where applicable or requested.
f. Certificates and qualification data, where applicable or requested.
g. List of similar installations for completed projects with project names and addresses and names and addresses of architects and owners.
h. Material test reports from a qualified testing agency indicating and interpreting test results for compliance with requirements indicated.
i. Research reports evidencing compliance with building code in effect for Project, from ICC-ES.
j. Detailed comparison of Contractor's construction schedule using proposed substitution with products specified for the Work, including effect on the overall Contract Time. If specified product or method of construction cannot be provided within the Contract Time, include letter from manufacturer, on manufacturer's letterhead, stating date of receipt of purchase order, lack of availability, or delays in delivery.
k. Cost information, including a proposal of change, if any, in the Contract Sum.
l. Contractor's certification that proposed substitution complies with requirements in the Contract Documents except as indicated in substitution request, is compatible with related materials, and is appropriate for applications indicated.
m. Contractor's waiver of rights to additional payment or time that may subsequently become necessary because of failure of proposed substitution to produce indicated results.

3. Architect's Action: If necessary, Architect will request additional information or documentation for evaluation within seven days of receipt of a request for substitution. Architect will notify Contractor of acceptance or rejection of proposed substitution within 15 days of receipt of request, or seven days of receipt of additional information or documentation, whichever is later.

a. Forms of Acceptance: Change Order, Construction Change Directive, or Architect's Supplemental Instructions for minor changes in the Work.
b. Use product specified if Architect does not issue a decision on use of a proposed substitution within time allocated.

1.5 QUALITY ASSURANCE

A. Compatibility of Substitutions: Investigate and document compatibility of proposed substitution with related products and materials. Engage a qualified testing agency to perform compatibility tests recommended by manufacturers.

NOT FOR BIDDING

1.6 PROCEDURES

A. Coordination: Revise or adjust affected work as necessary to integrate work of the approved substitutions.

PART 2 - PRODUCTS

2.1 SUBSTITUTIONS

A. Substitutions for Cause: Submit requests for substitution immediately on discovery of need for change, but not later than 15 days prior to time required for preparation and review of related submittals.

1. Conditions: Architect will consider Contractor's request for substitution when the following conditions are satisfied. If the following conditions are not satisfied, Architect will return requests without action, except to record noncompliance with these requirements:

a. Requested substitution is consistent with the Contract Documents and will produce indicated results.
b. Substitution request is fully documented and properly submitted.
c. Requested substitution will not adversely affect Contractor's construction schedule.
d. Requested substitution has received necessary approvals of authorities having jurisdiction.
e. Requested substitution is compatible with other portions of the Work.
f. Requested substitution has been coordinated with other portions of the Work.
g. Requested substitution provides specified warranty.
h. If requested substitution involves more than one contractor, requested substitution has been coordinated with other portions of the Work, is uniform and consistent, is compatible with other products, and is acceptable to all contractors involved.

B. Substitutions for Convenience: Not allowed.

PART 3 - EXECUTION (Not Used)

END OF SECTION 012500

NOT FOR BIDDING

(PAGE LEFT BLANK)

NOT FOR BIDDING

SECTION 012600 - CONTRACT MODIFICATION PROCEDURES

PART 1 - GENERAL

1.1 RELATED DOCUMENTS

A. Drawings and general provisions of the Contract, including General and Supplementary Conditions and other Division 01 Specification Sections, apply to this Section.

1.2 SUMMARY

A. Section includes administrative and procedural requirements for handling and processing Contract modifications.

B. Related Requirements:

1. Section 012500 "Substitution Procedures" for administrative procedures for handling requests for substitutions made after the Contract award.

1.3 MINOR CHANGES IN THE WORK

A. Architect will issue supplemental instructions authorizing minor changes in the Work, not involving adjustment to the Contract Sum or the Contract Time.

1.4 PROPOSAL REQUESTS

A. Owner-Initiated Proposal Requests: Architect will issue a detailed description of proposed changes in the Work that may require adjustment to the Contract Sum or the Contract Time. If necessary, the description will include supplemental or revised Drawings and Specifications.

1. Work Change Proposal Requests issued by Architect are not instructions either to stop work in progress or to execute the proposed change.
2. Within 20 days, when not otherwise specified, after receipt of Proposal Request, submit a quotation estimating cost adjustments to the Contract Sum and the Contract Time necessary to execute the change.

   a. Include a list of quantities of products required or eliminated and unit costs, with total amount of purchases and credits to be made. If requested, furnish survey data to substantiate quantities.
   b. Indicate applicable taxes, delivery charges, equipment rental, and amounts of trade discounts.
   c. Include costs of labor and supervision directly attributable to the change.
   d. Include an updated Contractor's construction schedule that indicates the effect of the change, including, but not limited to, changes in activity duration, start and finish times, and activity relationship. Use available total float before requesting an extension of the Contract Time.

NOT FOR BIDDING

e. Quotation Form: Use forms acceptable to Architect.

B. Contractor-Initiated Proposals: If latent or changed conditions require modifications to the Contract, Contractor may initiate a claim by submitting a request for a change to Architect.

1. Include a statement outlining reasons for the change and the effect of the change on the Work. Provide a complete description of the proposed change. Indicate the effect of the proposed change on the Contract Sum and the Contract Time.
2. Include a list of quantities of products required or eliminated and unit costs, with total amount of purchases and credits to be made. If requested, furnish survey data to substantiate quantities.
3. Indicate applicable taxes, delivery charges, equipment rental, and amounts of trade discounts.
4. Include costs of labor and supervision directly attributable to the change.
5. Include an updated Contractor's construction schedule that indicates the effect of the change, including, but not limited to, changes in activity duration, start and finish times, and activity relationship. Use available total float before requesting an extension of the Contract Time.
6. Comply with requirements in Section 012500 "Substitution Procedures" if the proposed change requires substitution of one product or system for product or system specified.
7. Proposal Request Form: Use form acceptable to Architect.

1.5 CHANGE ORDER PROCEDURES

A. On Owner's approval of a Work Changes Proposal Request, Architect will issue a Change Order for signatures of Owner and Contractor on AIA Document G701.

1.6 CONSTRUCTION CHANGE DIRECTIVE

A. Construction Change Directive: Architect may issue a Construction Change Directive on AIA Document G714. Construction Change Directive instructs Contractor to proceed with a change in the Work, for subsequent inclusion in a Change Order.

1. Construction Change Directive contains a complete description of change in the Work. It also designates method to be followed to determine change in the Contract Sum or the Contract Time.

B. Documentation: Maintain detailed records on a time and material basis of work required by the Construction Change Directive.

1. After completion of change, submit an itemized account and supporting data necessary to substantiate cost and time adjustments to the Contract.

PART 2 - PRODUCTS (Not Used)

PART 3 - EXECUTION (Not Used)

END OF SECTION 012600

NOT FOR BIDDING

SECTION 012900 - PAYMENT PROCEDURES

PART 1 - GENERAL

1.1 RELATED DOCUMENTS

A. Drawings and general provisions of the Contract, including General and Supplementary Conditions and other Division 01 Specification Sections, apply to this Section.

1.2 SUMMARY

A. Section includes administrative and procedural requirements necessary to prepare and process Applications for Payment.

B. Related Requirements:

1. Section 012600 "Contract Modification Procedures" for administrative procedures for handling changes to the Contract.
2. Section 013200 "Construction Progress Documentation" for administrative requirements governing the preparation and submittal of the Contractor's construction schedule.

1.3 DEFINITIONS

A. Schedule of Values: A statement furnished by Contractor allocating portions of the Contract Sum to various portions of the Work and used as the basis for reviewing Contractor's Applications for Payment.

1.4 SCHEDULE OF VALUES

A. Coordination: Coordinate preparation of the schedule of values with preparation of Contractor's construction schedule.

1. Coordinate the items in the schedule of values with other required administrative forms and schedules, including the following:

   a. Application for Payment forms with continuation sheets.
   b. Submittal schedule.
   c. Items required to be indicated as separate activities in Contractor's construction schedule.

2. Submit the schedule of values to Architect at earliest possible date, but no later than seven days before the date scheduled for submittal of initial Applications for Payment.
3. Subschedules for Phased Work: Where the Work is separated into phases requiring separately phased payments, provide subschedules showing values coordinated with each phase of payment.

NOT FOR BIDDING

4. Subschedules for Separate Elements of Work: Where the Contractor's construction schedule defines separate elements of the Work, provide subschedules showing values coordinated with each element.
5. Subschedules for Separate Design Contracts: Where the Owner has retained design professionals under separate contracts who will each provide certification of payment requests, provide subschedules showing values coordinated with the scope of each design services contract as described in Section 011000 "Summary."

B. Format and Content: Use Project Manual table of contents as a guide to establish line items for the schedule of values. Provide at least one line item for each Specification Section.

1. Identification: Include the following Project identification on the schedule of values:

   a. Project name and location.
   b. Name of Architect.
   c. Architect's project number.
   d. Contractor's name and address.
   e. Date of submittal.

2. Arrange schedule of values consistent with format of AIA Document G703.
3. Arrange the schedule of values in tabular form with separate columns to indicate the following for each item listed:

   a. Related Specification Section or Division.
   b. Description of the Work.
   c. Name of subcontractor.
   d. Name of manufacturer or fabricator.
   e. Name of supplier.
   f. Change Orders (numbers) that affect value.
   g. Dollar value of the following, as a percentage of the Contract Sum to nearest one-hundredth percent, adjusted to total 100 percent.

      1) Labor.
      2) Materials.
      3) Equipment.

4. Provide a breakdown of the Contract Sum in enough detail to facilitate continued evaluation of Applications for Payment and progress reports. Coordinate with Project Manual table of contents. Provide multiple line items for principal subcontract amounts in excess of five percent of the Contract Sum.

   a. Include separate line items under principal subcontracts for Project closeout requirements in an amount totaling five percent of the Contract Sum and subcontract amount.

5. Round amounts to nearest whole dollar; total shall equal the Contract Sum.
6. Provide a separate line item in the schedule of values for each part of the Work where Applications for Payment may include materials or equipment purchased or fabricated and stored, but not yet installed.

NOT FOR BIDDING

a. Differentiate between items stored on-site and items stored off-site. If required, include evidence of insurance.

7. Provide separate line items in the schedule of values for initial cost of materials, for each subsequent stage of completion, and for total installed value of that part of the Work.
8. Allowances: Provide a separate line item in the schedule of values for each allowance. Show line-item value of unit-cost allowances, as a product of the unit cost, multiplied by measured quantity. Use information indicated in the Contract Documents to determine quantities.
9. Purchase Contracts: Provide a separate line item in the schedule of values for each purchase contract. Show line-item value of purchase contract. Indicate owner payments or deposits, if any, and balance to be paid by Contractor.
10. Each item in the schedule of values and Applications for Payment shall be complete. Include total cost and proportionate share of general overhead and profit for each item.

    a. Temporary facilities and other major cost items that are not direct cost of actual work-in-place may be shown either as separate line items in the schedule of values or distributed as general overhead expense, at Contractor's option.

11. Schedule Updating: Update and resubmit the schedule of values before the next Applications for Payment when Change Orders or Construction Change Directives result in a change in the Contract Sum.

1.5 APPLICATIONS FOR PAYMENT

A. Each Application for Payment following the initial Application for Payment shall be consistent with previous applications and payments as certified by Architect and paid for by Owner.

   1. Initial Application for Payment, Application for Payment at time of Substantial Completion, and final Application for Payment involve additional requirements.

B. Payment Application Times: The date for each progress payment is indicated in the Agreement between Owner and Contractor. The period of construction work covered by each Application for Payment is the period indicated in the Agreement.

C. Payment Application Times: Submit Application for Payment to Architect by the 25th of the month. The period covered by each Application for Payment is one month, ending on the last day of the month.

   1. Submit draft copy of Application for Payment seven days prior to due date for review by Architect.

D. Application for Payment Forms: Use AIA Document G702 and AIA Document G703 as form for Applications for Payment.

E. Application Preparation: Complete every entry on form. Notarize and execute by a person authorized to sign legal documents on behalf of Contractor. Architect will return incomplete applications without action.

NOT FOR BIDDING

1. Entries shall match data on the schedule of values and Contractor's construction schedule. Use updated schedules if revisions were made.
2. Include amounts for work completed following previous Application for Payment, whether or not payment has been received. Include only amounts for work completed at time of Application for Payment.
3. Include amounts of Change Orders and Construction Change Directives issued before last day of construction period covered by application.
4. Indicate separate amounts for work being carried out under Owner-requested project acceleration.

F. Stored Materials: Include in Application for Payment amounts applied for materials or equipment purchased or fabricated and stored, but not yet installed. Differentiate between items stored on-site and items stored off-site.

1. Provide certificate of insurance, evidence of transfer of title to Owner, and consent of surety to payment, for stored materials.
2. Provide supporting documentation that verifies amount requested, such as paid invoices. Match amount requested with amounts indicated on documentation; do not include overhead and profit on stored materials.
3. Provide summary documentation for stored materials indicating the following:

   a. Value of materials previously stored and remaining stored as of date of previous Applications for Payment.
   b. Value of previously stored materials put in place after date of previous Application for Payment and on or before date of current Application for Payment.
   c. Value of materials stored since date of previous Application for Payment and remaining stored as of date of current Application for Payment.

G. Transmittal: Submit three signed and notarized original copies of each Application for Payment to Architect by a method ensuring receipt within 24 hours. One copy shall include waivers of lien and similar attachments if required.

1. Transmit each copy with a transmittal form listing attachments and recording appropriate information about application.

H. Waivers of Mechanic's Lien: With each Application for Payment, submit waivers of mechanic's lien from entities lawfully entitled to file a mechanic's lien arising out of the Contract and related to the Work covered by the payment.

1. Submit partial waivers on each item for amount requested in previous application, after deduction for retainage, on each item.
2. When an application shows completion of an item, submit conditional final or full waivers.
3. Owner reserves the right to designate which entities involved in the Work must submit waivers.
4. Waiver Forms: Submit executed waivers of lien on forms acceptable to Owner.

I. Waivers of Mechanic's Lien: With each Application for Payment, submit waivers of mechanic's liens from subcontractors, sub-subcontractors, and suppliers for construction period covered by the previous application.

NOT FOR BIDDING

1. Submit partial waivers on each item for amount requested in previous application, after deduction for retainage, on each item.
2. When an application shows completion of an item, submit conditional final or full waivers.
3. Owner reserves the right to designate which entities involved in the Work must submit waivers.
4. Submit final Application for Payment with or preceded by conditional final waivers from every entity involved with performance of the Work covered by the application who is lawfully entitled to a lien.
5. Waiver Forms: Submit executed waivers of lien on forms, acceptable to Owner.

J. Initial Application for Payment: Administrative actions and submittals that must precede or coincide with submittal of first Application for Payment include the following:

1. List of subcontractors.
2. Schedule of values.
3. Sustainable design submittal for project material cost data.
4. Contractor's construction schedule (preliminary if not final).
5. Combined Contractor's construction schedule (preliminary if not final) incorporating Work of multiple contracts, with indication of acceptance of schedule by each Contractor.
6. Products list (preliminary if not final).
7. Sustainable design action plans.
8. Schedule of unit prices.
9. Submittal schedule (preliminary if not final).
10. List of Contractor's staff assignments.
11. List of Contractor's principal consultants.
12. Copies of building permits.
13. Copies of authorizations and licenses from authorities having jurisdiction for performance of the Work.
14. Initial progress report.
15. Report of preconstruction conference.
16. Certificates of insurance and insurance policies.
17. Performance and payment bonds.
18. Data needed to acquire Owner's insurance.

K. Application for Payment at Substantial Completion: After Architect issues the Certificate of Substantial Completion, submit an Application for Payment showing 100 percent completion for portion of the Work claimed as substantially complete.

1. Include documentation supporting claim that the Work is substantially complete and a statement showing an accounting of changes to the Contract Sum.
2. This application shall reflect Certificate(s) of Substantial Completion issued previously for Owner occupancy of designated portions of the Work.

L. Final Payment Application: After completing Project closeout requirements, submit final Application for Payment with releases and supporting documentation not previously submitted and accepted, including, but not limited, to the following:

1. Evidence of completion of Project closeout requirements.
2. Insurance certificates for products and completed operations where required and proof that taxes, fees, and similar obligations were paid.

NOT FOR BIDDING

3. Updated final statement, accounting for final changes to the Contract Sum.
4. AIA Document G706, "Contractor's Affidavit of Payment of Debts and Claims."
5. AIA Document G706A, "Contractor's Affidavit of Release of Liens."
6. AIA Document G707, "Consent of Surety to Final Payment."
7. Evidence that claims have been settled.
8. Final meter readings for utilities, a measured record of stored fuel, and similar data as of date of Substantial Completion or when Owner took possession of and assumed responsibility for corresponding elements of the Work.
9. Final liquidated damages settlement statement.

PART 2 - PRODUCTS (Not Used)

PART 3 - EXECUTION (Not Used)

END OF SECTION 012900

NOT FOR BIDDING

SECTION 013100 - PROJECT MANAGEMENT AND COORDINATION

PART 1 - GENERAL

1.1 RELATED DOCUMENTS

A. Drawings and general provisions of the Contract, including General and Supplementary Conditions and other Division 01 Specification Sections, apply to this Section.

1.2 SUMMARY

A. Section includes administrative provisions for coordinating construction operations on Project including, but not limited to, the following:

1. General coordination procedures.
2. Coordination drawings.
3. Requests for Information (RFIs).
4. Project meetings.

B. Each contractor shall participate in coordination requirements. Certain areas of responsibility are assigned to a specific contractor.

C. Related Requirements:

1. Section 013200 "Construction Progress Documentation" for preparing and submitting Contractor's construction schedule.
2. Section 017300 "Execution" for procedures for coordinating general installation and field-engineering services, including establishment of benchmarks and control points.
3. Section 017700 "Closeout Procedures" for coordinating closeout of the Contract.

1.3 DEFINITIONS

A. RFI: Request from Owner, Architect, or Contractor seeking information required by or clarifications of the Contract Documents.

1.4 INFORMATIONAL SUBMITTALS

A. Subcontract List: Prepare a written summary identifying individuals or firms proposed for each portion of the Work, including those who are to furnish products or equipment fabricated to a special design. Include the following information in tabular form:

1. Name, address, and telephone number of entity performing subcontract or supplying products.
2. Number and title of related Specification Section(s) covered by subcontract.
3. Drawing number and detail references, as appropriate, covered by subcontract.

NOT FOR BIDDING

B. Key Personnel Names: Within 15 days of starting construction operations, submit a list of key personnel assignments, including superintendent and other personnel in attendance at Project site. Identify individuals and their duties and responsibilities; list addresses and telephone numbers, including home, office, and cellular telephone numbers and e-mail addresses. Provide names, addresses, and telephone numbers of individuals assigned as alternates in the absence of individuals assigned to Project.

1. Post copies of list in project meeting room, in temporary field office, and by each temporary telephone. Keep list current at all times.

1.5 GENERAL COORDINATION PROCEDURES

A. Coordination: Coordinate construction operations included in different Sections of the Specifications to ensure efficient and orderly installation of each part of the Work. Coordinate construction operations, included in different Sections, that depend on each other for proper installation, connection, and operation.

1. Schedule construction operations in sequence required to obtain the best results where installation of one part of the Work depends on installation of other components, before or after its own installation.
2. Coordinate installation of different components to ensure maximum performance and accessibility for required maintenance, service, and repair.
3. Make adequate provisions to accommodate items scheduled for later installation.

B. Coordination: Each contractor shall coordinate its construction operations with those of other contractors and entities to ensure efficient and orderly installation of each part of the Work. Each contractor shall coordinate its operations with operations, included in different Sections, that depend on each other for proper installation, connection, and operation.

1. Schedule construction operations in sequence required to obtain the best results where installation of one part of the Work depends on installation of other components, before or after its own installation.
2. Coordinate installation of different components with other contractors to ensure maximum performance and accessibility for required maintenance, service, and repair.
3. Make adequate provisions to accommodate items scheduled for later installation.

C. Prepare memoranda for distribution to each party involved, outlining special procedures required for coordination. Include such items as required notices, reports, and list of attendees at meetings.

1. Prepare similar memoranda for Owner and separate contractors if coordination of their Work is required.

D. Administrative Procedures: Coordinate scheduling and timing of required administrative procedures with other construction activities and activities of other contractors to avoid conflicts and to ensure orderly progress of the Work. Such administrative activities include, but are not limited to, the following:

1. Preparation of Contractor's construction schedule.
2. Preparation of the schedule of values.

NOT FOR BIDDING

3. Installation and removal of temporary facilities and controls.
4. Delivery and processing of submittals.
5. Progress meetings.
6. Preinstallation conferences.
7. Project closeout activities.
8. Startup and adjustment of systems.

E. Conservation: Coordinate construction activities to ensure that operations are carried out with consideration given to conservation of energy, water, and materials. Coordinate use of temporary utilities to minimize waste.

1. Salvage materials and equipment involved in performance of, but not actually incorporated into, the Work. See other Sections for disposition of salvaged materials that are designated as Owner's property.

1.6 REQUESTS FOR INFORMATION (RFIs)

A. General: Immediately on discovery of the need for additional information or interpretation of the Contract Documents, Contractor shall prepare and submit an RFI in the form specified.

1. Architect will return RFIs submitted to Architect by other entities controlled by Contractor with no response.
2. Coordinate and submit RFIs in a prompt manner so as to avoid delays in Contractor's work or work of subcontractors.

B. Content of the RFI: Include a detailed, legible description of item needing information or interpretation and the following:

1. Project name.
2. Project number.
3. Date.
4. Name of Contractor.
5. Name of Architect.
6. RFI number, numbered sequentially.
7. RFI subject.
8. Specification Section number and title and related paragraphs, as appropriate.
9. Drawing number and detail references, as appropriate.
10. Field dimensions and conditions, as appropriate.
11. Contractor's suggested resolution. If Contractor's suggested resolution impacts the Contract Time or the Contract Sum, Contractor shall state impact in the RFI.
12. Contractor's signature.
13. Attachments: Include sketches, descriptions, measurements, photos, Product Data, Shop Drawings, coordination drawings, and other information necessary to fully describe items needing interpretation.

a. Include dimensions, thicknesses, structural grid references, and details of affected materials, assemblies, and attachments on attached sketches.

C. RFI Forms: Software-generated form with substantially the same content as indicated above, acceptable to Architect.

NOT FOR BIDDING

1. Attachments shall be electronic files in Adobe Acrobat PDF format.

D. Architect's Action: Architect will review each RFI, determine action required, and respond. Allow seven working days for Architect's response for each RFI. RFIs received by Architect after 1:00 p.m. will be considered as received the following working day.

1. The following Contractor-generated RFIs will be returned without action:

   a. Requests for approval of submittals.
   b. Requests for approval of substitutions.
   c. Requests for approval of Contractor's means and methods.
   d. Requests for coordination information already indicated in the Contract Documents.
   e. Requests for adjustments in the Contract Time or the Contract Sum.
   f. Requests for interpretation of Architect's actions on submittals.
   g. Incomplete RFIs or inaccurately prepared RFIs.

2. Architect's action may include a request for additional information, in which case Architect's time for response will date from time of receipt of additional information.
3. Architect's action on RFIs that may result in a change to the Contract Time or the Contract Sum may be eligible for Contractor to submit Change Proposal according to Section 012600 "Contract Modification Procedures."

   a. If Contractor believes the RFI response warrants change in the Contract Time or the Contract Sum, notify Architect in writing within 10 days of receipt of the RFI response.

E. RFI Log: Prepare, maintain, and submit a tabular log of RFIs organized by the RFI number. Submit log weekly. Software log with not less than the following:

1. Project name.
2. Name and address of Contractor.
3. Name and address of Architect.
4. RFI number including RFIs that were returned without action or withdrawn.
5. RFI description.
6. Date the RFI was submitted.
7. Date Architect's response was received.

F. On receipt of Architect's action, update the RFI log and immediately distribute the RFI response to affected parties. Review response and notify Architect within seven days if Contractor disagrees with response.

1. Identification of related Minor Change in the Work, Construction Change Directive, and Proposal Request, as appropriate.
2. Identification of related Field Order, Work Change Directive, and Proposal Request, as appropriate.

NOT FOR BIDDING

1.7 PROJECT MEETINGS

A. General: Schedule and conduct meetings and conferences at Project site unless otherwise indicated.

1. Attendees: Inform participants and others involved, and individuals whose presence is required, of date and time of each meeting. Notify Owner and Architect of scheduled meeting dates and times.
2. Agenda: Prepare the meeting agenda. Distribute the agenda to all invited attendees.
3. Minutes: Entity responsible for conducting meeting will record significant discussions and agreements achieved. Distribute the meeting minutes to everyone concerned, including Owner and Architect, within three days of the meeting.

B. Preconstruction Conference: Architect will schedule and conduct a preconstruction conference before starting construction, at a time convenient to Owner and Architect, but no later than 15 days after execution of the Agreement.

1. Conduct the conference to review responsibilities and personnel assignments.
2. Attendees: Authorized representatives of Owner, Architect, and their consultants; Contractor and its superintendent; major subcontractors; suppliers; and other concerned parties shall attend the conference. Participants at the conference shall be familiar with Project and authorized to conclude matters relating to the Work.
3. Agenda: Discuss items of significance that could affect progress, including the following:

    a. Tentative construction schedule.
    b. Phasing.
    c. Critical work sequencing and long-lead items.
    d. Designation of key personnel and their duties.
    e. Lines of communications.
    f. Procedures for processing field decisions and Change Orders.
    g. Procedures for RFIs.
    h. Procedures for testing and inspecting.
    i. Procedures for processing Applications for Payment.
    j. Distribution of the Contract Documents.
    k. Submittal procedures.
    l. Sustainable design requirements.
    m. Preparation of record documents.
    n. Use of the premises.
    o. Work restrictions.
    p. Working hours.
    q. Owner occupancy requirements.
    r. Responsibility for temporary facilities and controls.
    s. Procedures for moisture and mold control.
    t. Procedures for disruptions and shutdowns.
    u. Construction waste management and recycling.
    v. Parking availability.
    w. Office, work, and storage areas.
    x. Equipment deliveries and priorities.
    y. First aid.
    z. Security.
    aa. Progress cleaning.

NOT FOR BIDDING

4. Minutes: Entity responsible for conducting meeting will record and distribute meeting minutes.

C. Preinstallation Conferences: Conduct a preinstallation conference at Project site before each construction activity that requires coordination with other construction.

1. Attendees: Installer and representatives of manufacturers and fabricators involved in or affected by the installation and its coordination or integration with other materials and installations that have preceded or will follow, shall attend the meeting. Advise Architect of scheduled meeting dates.
2. Agenda: Review progress of other construction activities and preparations for the particular activity under consideration, including requirements for the following:

   a. Contract Documents.
   b. Options.
   c. Related RFIs.
   d. Related Change Orders.
   e. Purchases.
   f. Deliveries.
   g. Submittals.
   h. Sustainable design requirements.
   i. Review of mockups.
   j. Possible conflicts.
   k. Compatibility requirements.
   l. Time schedules.
   m. Weather limitations.
   n. Manufacturer's written instructions.
   o. Warranty requirements.
   p. Compatibility of materials.
   q. Acceptability of substrates.
   r. Temporary facilities and controls.
   s. Space and access limitations.
   t. Regulations of authorities having jurisdiction.
   u. Testing and inspecting requirements.
   v. Installation procedures.
   w. Coordination with other work.
   x. Required performance results.
   y. Protection of adjacent work.
   z. Protection of construction and personnel.

3. Record significant conference discussions, agreements, and disagreements, including required corrective measures and actions.
4. Reporting: Distribute minutes of the meeting to each party present and to other parties requiring information.
5. Do not proceed with installation if the conference cannot be successfully concluded. Initiate whatever actions are necessary to resolve impediments to performance of the Work and reconvene the conference at earliest feasible date.

D. Project Closeout Conference: Schedule and conduct a project closeout conference, at a time convenient to Owner and Architect, but no later than 90 days prior to the scheduled date of Substantial Completion.

NOT FOR BIDDING

1. Conduct the conference to review requirements and responsibilities related to Project closeout.
2. Attendees: Authorized representatives of Owner, Architect, and their consultants; Contractor and its superintendent; major subcontractors; suppliers; and other concerned parties shall attend the meeting. Participants at the meeting shall be familiar with Project and authorized to conclude matters relating to the Work.
3. Agenda: Discuss items of significance that could affect or delay Project closeout, including the following:

    a. Preparation of record documents.
    b. Procedures required prior to inspection for Substantial Completion and for final inspection for acceptance.
    c. Submittal of written warranties.
    d. Requirements for completing sustainable design documentation.
    e. Requirements for preparing operations and maintenance data.
    f. Requirements for delivery of material samples, attic stock, and spare parts.
    g. Requirements for demonstration and training.
    h. Preparation of Contractor's punch list.
    i. Procedures for processing Applications for Payment at Substantial Completion and for final payment.
    j. Submittal procedures.
    k. Coordination of separate contracts.
    l. Owner's partial occupancy requirements.
    m. Installation of Owner's furniture, fixtures, and equipment.
    n. Responsibility for removing temporary facilities and controls.

4. Minutes: Entity conducting meeting will record and distribute meeting minutes.

E. Progress Meetings: Architect will conduct progress meetings at biweekly intervals.

1. Coordinate dates of meetings with preparation of payment requests.
2. Attendees: In addition to representatives of Owner and Architect, each contractor, subcontractor, supplier, and other entity concerned with current progress or involved in planning, coordination or performance of future activities shall be represented at these meetings. All participants at the meeting shall be familiar with Project and authorized to conclude matters relating to the Work.
3. Agenda: Review and correct or approve minutes of previous progress meeting. Review other items of significance that could affect progress. Include topics for discussion as appropriate to status of Project.

    a. Contractor's Construction Schedule: Review progress since the last meeting. Determine whether each activity is on time, ahead of schedule, or behind schedule, in relation to Contractor's construction schedule. Determine how construction behind schedule will be expedited; secure commitments from parties involved to do so. Discuss whether schedule revisions are required to ensure that current and subsequent activities will be completed within the Contract Time.

        1) Review schedule for next period.

    b. Review present and future needs of each entity present, including the following:

NOT FOR BIDDING

1) Interface requirements.
2) Sequence of operations.
3) Resolution of BIM component conflicts.
4) Status of submittals.
5) Status of sustainable design documentation.
6) Deliveries.
7) Off-site fabrication.
8) Access.
9) Site utilization.
10) Temporary facilities and controls.
11) Progress cleaning.
12) Quality and work standards.
13) Status of correction of deficient items.
14) Field observations.
15) Status of RFIs.
16) Status of proposal requests.
17) Pending changes.
18) Status of Change Orders.
19) Pending claims and disputes.
20) Documentation of information for payment requests.

4. Minutes: Entity responsible for conducting the meeting will record and distribute the meeting minutes to each party present and to parties requiring information.

   a. Schedule Updating: Revise Contractor's construction schedule after each progress meeting where revisions to the schedule have been made or recognized. Issue revised schedule concurrently with the report of each meeting.

F. Coordination Meetings: Conduct Project coordination meetings at weekly intervals. Project coordination meetings are in addition to specific meetings held for other purposes, such as progress meetings and preinstallation conferences.

1. Attendees: In addition to representatives of Owner and Architect, each contractor, subcontractor, supplier and other entity concerned with current progress or involved in planning, coordination, or performance of future activities shall be represented at these meetings. All participants at the meetings shall be familiar with Project and authorized to conclude matters relating to the Work.
2. Agenda: Review and correct or approve minutes of the previous coordination meeting. Review other items of significance that could affect progress. Include topics for discussion as appropriate to status of Project.

   a. Combined Contractor's Construction Schedule: Review progress since the last coordination meeting. Determine whether each contract is on time, ahead of schedule, or behind schedule, in relation to combined Contractor's construction schedule. Determine how construction behind schedule will be expedited; secure commitments from parties involved to do so. Discuss whether schedule revisions are required to ensure that current and subsequent activities will be completed within the Contract Time.
   b. Schedule Updating: Revise combined Contractor's construction schedule after each coordination meeting where revisions to the schedule have been made or recognized. Issue revised schedule concurrently with report of each meeting.

NOT FOR BIDDING

c. Review present and future needs of each contractor present, including the following:

1) Interface requirements.
2) Sequence of operations.
3) Resolution of BIM component conflicts.
4) Status of submittals.
5) Deliveries.
6) Off-site fabrication.
7) Access.
8) Site utilization.
9) Temporary facilities and controls.
10) Work hours.
11) Hazards and risks.
12) Progress cleaning.
13) Quality and work standards.
14) Change Orders.

3. Reporting: Record meeting results and distribute copies to everyone in attendance and to others affected by decisions or actions resulting from each meeting.

PART 2 - PRODUCTS (Not Used)

PART 3 - EXECUTION (Not Used)

END OF SECTION 013100

NOT FOR BIDDING

(PAGE LEFT BLANK)

NOT FOR BIDDING

SECTION 013200 - CONSTRUCTION PROGRESS DOCUMENTATION

PART 1 - GENERAL

1.1 RELATED DOCUMENTS

A. Drawings and general provisions of the Contract, including General and Supplementary Conditions and other Division 01 Specification Sections, apply to this Section.

1.2 SUMMARY

A. Section includes administrative and procedural requirements for documenting the progress of construction during performance of the Work, including the following:

1. Startup construction schedule.
2. Contractor's construction schedule.
3. Construction schedule updating reports.
4. Daily construction reports.
5. Material location reports.
6. Site condition reports.
7. Special reports.

B. Related Requirements:

1. Section 013300 "Submittal Procedures" for submitting schedules and reports.
2. Section 014000 "Quality Requirements" for submitting a schedule of tests and inspections.

1.3 DEFINITIONS

A. Activity: A discrete part of a project that can be identified for planning, scheduling, monitoring, and controlling the construction project. Activities included in a construction schedule consume time and resources.

1. Critical Activity: An activity on the critical path that must start and finish on the planned early start and finish times.
2. Predecessor Activity: An activity that precedes another activity in the network.
3. Successor Activity: An activity that follows another activity in the network.

B. Cost Loading: The allocation of the schedule of values for the completion of an activity as scheduled. The sum of costs for all activities must equal the total Contract Sum unless otherwise approved by Architect.

C. CPM: Critical path method, which is a method of planning and scheduling a construction project where activities are arranged based on activity relationships. Network calculations determine when activities can be performed and the critical path of Project.

NOT FOR BIDDING

D. Critical Path: The longest connected chain of interdependent activities through the network schedule that establishes the minimum overall Project duration and contains no float.

E. Event: The starting or ending point of an activity.

F. Float: The measure of leeway in starting and completing an activity.

1. Float time belongs to Owner.
2. Free float is the amount of time an activity can be delayed without adversely affecting the early start of the successor activity.
3. Total float is the measure of leeway in starting or completing an activity without adversely affecting the planned Project completion date.

G. Resource Loading: The allocation of manpower and equipment necessary for the completion of an activity as scheduled.

1.4 INFORMATIONAL SUBMITTALS

A. Format for Submittals: Submit required submittals in the following format:

1. Working electronic copy of schedule file, where indicated.
2. PDF electronic file.
3. Two paper copies.

B. Startup construction schedule.

1. Approval of cost-loaded, startup construction schedule will not constitute approval of schedule of values for cost-loaded activities.

C. Startup Network Diagram: Of size required to display entire network for entire construction period. Show logic ties for activities.

D. Contractor's Construction Schedule: Initial schedule, of size required to display entire schedule for entire construction period.

1. Submit a working electronic copy of schedule, using software indicated, and labeled to comply with requirements for submittals. Include type of schedule (initial or updated) and date on label.

E. CPM Reports: Concurrent with CPM schedule, submit each of the following reports. Format for each activity in reports shall contain activity number, activity description, cost and resource loading, original duration, remaining duration, early start date, early finish date, late start date, late finish date, and total float in calendar days.

1. Activity Report: List of all activities sorted by activity number and then early start date, or actual start date if known.
2. Logic Report: List of preceding and succeeding activities for all activities, sorted in ascending order by activity number and then early start date, or actual start date if known.
3. Total Float Report: List of all activities sorted in ascending order of total float.

NOT FOR BIDDING

4. Earnings Report: Compilation of Contractor's total earnings from commencement of the Work until most recent Application for Payment.

F. Construction Schedule Updating Reports: Submit with Applications for Payment.

G. Daily Construction Reports: Submit at weekly intervals.

H. Material Location Reports: Submit at weekly intervals.

I. Site Condition Reports: Submit at time of discovery of differing conditions.

J. Special Reports: Submit at time of unusual event.

K. Qualification Data: For scheduling consultant.

1.5 QUALITY ASSURANCE

A. Scheduling Consultant Qualifications: An experienced specialist in CPM scheduling and reporting, with capability of producing CPM reports and diagrams within 24 hours of Architect's request.

B. Prescheduling Conference: Conduct conference at Project site to comply with requirements in Section 013100 "Project Management and Coordination." Review methods and procedures related to the preliminary construction schedule and Contractor's construction schedule, including, but not limited to, the following:

1. Review software limitations and content and format for reports.
2. Verify availability of qualified personnel needed to develop and update schedule.
3. Discuss constraints, including work stages, area separations.
4. Review delivery dates for Owner-furnished products.
5. Review schedule for work of Owner's separate contracts.
6. Review submittal requirements and procedures.
7. Review time required for review of submittals and resubmittals.
8. Review requirements for tests and inspections by independent testing and inspecting agencies.
9. Review time required for Project closeout and Owner startup procedures.
10. Review and finalize list of construction activities to be included in schedule.
11. Review procedures for updating schedule.

1.6 COORDINATION

A. Coordinate Contractor's construction schedule with the schedule of values, list of subcontracts, submittal schedule, progress reports, payment requests, and other required schedules and reports.

1. Secure time commitments for performing critical elements of the Work from entities involved.
2. Coordinate each construction activity in the network with other activities and schedule them in proper sequence.

NOT FOR BIDDING

PART 2 - PRODUCTS

2.1 CONTRACTOR'S CONSTRUCTION SCHEDULE, GENERAL

A. Time Frame: Extend schedule from date established for commencement of the Work to date of final completion.

1. Contract completion date shall not be changed by submission of a schedule that shows an early completion date, unless specifically authorized by Change Order.

B. Activities: Treat each story or separate area as a separate numbered activity for each main element of the Work. Comply with the following:

1. Activity Duration: Define activities so no activity is longer than 20 days, unless specifically allowed by Architect.
2. Procurement Activities: Include procurement process activities for the following long lead items and major items, requiring a cycle of more than 60 days, as separate activities in schedule. Procurement cycle activities include, but are not limited to, submittals, approvals, purchasing, fabrication, and delivery.

3. Submittal Review Time: Include review and resubmittal times indicated in Section 013300 "Submittal Procedures" in schedule. Coordinate submittal review times in Contractor's construction schedule with submittal schedule.
4. Startup and Testing Time: Include no fewer than 15 days for startup and testing.
5. Substantial Completion: Indicate completion in advance of date established for Substantial Completion, and allow time for Architect's administrative procedures necessary for certification of Substantial Completion.
6. Punch List and Final Completion: Include not more than 30 days for completion of punch list items and final completion.

C. Constraints: Include constraints and work restrictions indicated in the Contract Documents and as follows in schedule, and show how the sequence of the Work is affected.

1. Phasing: Arrange list of activities on schedule by phase.
2. Work under More Than One Contract: Include a separate activity for each contract.
3. Work by Owner: Include a separate activity for each portion of the Work performed by Owner.
4. Products Ordered in Advance: Include a separate activity for each product. Include delivery date indicated in Section 011000 "Summary." Delivery dates indicated stipulate the earliest possible delivery date.
5. Owner-Furnished Products: Include a separate activity for each product. Include delivery date indicated in Section 011000 "Summary." Delivery dates indicated stipulate the earliest possible delivery date.
6. Work Restrictions: Show the effect of the following items on the schedule:

   a. Coordination with existing construction.
   b. Limitations of continued occupancies.
   c. Uninterruptible services.
   d. Partial occupancy before Substantial Completion.
   e. Use of premises restrictions.

NOT FOR BIDDING

f. Provisions for future construction.
g. Seasonal variations.
h. Environmental control.

7. Work Stages: Indicate important stages of construction for each major portion of the Work, including, but not limited to, the following:

a. Subcontract awards.
b. Submittals.
c. Purchases.
d. Mockups.
e. Fabrication.
f. Sample testing.
g. Deliveries.
h. Installation.
i. Tests and inspections.
j. Adjusting.
k. Curing.
l. Building flush-out.
m. Startup and placement into final use and operation.

8. Construction Areas: Identify each major area of construction for each major portion of the Work. Indicate where each construction activity within a major area must be sequenced or integrated with other construction activities to provide for the following:

a. Structural completion.
b. Temporary enclosure and space conditioning.
c. Permanent space enclosure.
d. Completion of mechanical installation.
e. Completion of electrical installation.
f. Substantial Completion.

D. Milestones: Include milestones indicated in the Contract Documents in schedule, including, but not limited to, the Notice to Proceed, Substantial Completion, and final completion.

E. Cost Correlation: Superimpose a cost correlation timeline, indicating planned and actual costs. On the line, show planned and actual dollar volume of the Work performed as of planned and actual dates used for preparation of payment requests.

1. See Section 012900 "Payment Procedures" for cost reporting and payment procedures.

F. Upcoming Work Summary: Prepare summary report indicating activities scheduled to occur or commence prior to submittal of next schedule update. Summarize the following issues:

1. Unresolved issues.
2. Unanswered Requests for Information.
3. Rejected or unreturned submittals.
4. Notations on returned submittals.
5. Pending modifications affecting the Work and Contract Time.

NOT FOR BIDDING

G. Recovery Schedule: When periodic update indicates the Work is 14 or more calendar days behind the current approved schedule, submit a separate recovery schedule indicating means by which Contractor intends to regain compliance with the schedule. Indicate changes to working hours, working days, crew sizes, and equipment required to achieve compliance, and date by which recovery will be accomplished.

H. Computer Scheduling Software: Prepare schedules using current version of a program that has been developed specifically to manage construction schedules.

1. Use Microsoft Project, Primavera, Meridian Prolog, for Windows operating system.

2.2 STARTUP CONSTRUCTION SCHEDULE

A. Bar-Chart Schedule: Submit startup, horizontal, bar-chart-type construction schedule within seven days of date established for commencement of the Work.

B. Preparation: Indicate each significant construction activity separately. Identify first workday of each week with a continuous vertical line. Outline significant construction activities for first 90 days of construction. Include skeleton diagram for the remainder of the Work and a cash requirement prediction based on indicated activities.

2.3 CONTRACTOR'S CONSTRUCTION SCHEDULE (GANTT CHART)

A. Gantt-Chart Schedule: Submit a comprehensive, fully developed, horizontal, Gantt-chart-type, Contractor's construction schedule within 30 days of date established for commencement of the Work. Base schedule on the startup construction schedule and additional information received since the start of Project.

B. Preparation: Indicate each significant construction activity separately. Identify first workday of each week with a continuous vertical line.

1. For construction activities that require three months or longer to complete, indicate an estimated completion percentage in **10** percent increments within time bar.

2.4 REPORTS

A. Daily Construction Reports: Prepare a daily construction report recording the following information concerning events at Project site:

1. List of subcontractors at Project site.
2. List of separate contractors at Project site.
3. Approximate count of personnel at Project site.
4. Equipment at Project site.
5. Material deliveries.
6. High and low temperatures and general weather conditions, including presence of rain or snow.
7. Accidents.
8. Meetings and significant decisions.

NOT FOR BIDDING

9. Unusual events (see special reports).
10. Stoppages, delays, shortages, and losses.
11. Meter readings and similar recordings.
12. Emergency procedures.
13. Orders and requests of authorities having jurisdiction.
14. Change Orders received and implemented.
15. Construction Change Directives received and implemented.
16. Services connected and disconnected.
17. Equipment or system tests and startups.
18. Partial completions and occupancies.
19. Substantial Completions authorized.

B. Material Location Reports: At weekly intervals, prepare and submit a comprehensive list of materials delivered to and stored at Project site. List shall be cumulative, showing materials previously reported plus items recently delivered. Include with list a statement of progress on and delivery dates for materials or items of equipment fabricated or stored away from Project site. Indicate the following categories for stored materials:

1. Material stored prior to previous report and remaining in storage.
2. Material stored prior to previous report and since removed from storage and installed.
3. Material stored following previous report and remaining in storage.

C. Site Condition Reports: Immediately on discovery of a difference between site conditions and the Contract Documents, prepare and submit a detailed report. Submit with a Request for Information. Include a detailed description of the differing conditions, together with recommendations for changing the Contract Documents.

2.5 SPECIAL REPORTS

A. General: Submit special reports directly to Owner within one day(s) of an occurrence. Distribute copies of report to parties affected by the occurrence.

B. Reporting Unusual Events: When an event of an unusual and significant nature occurs at Project site, whether or not related directly to the Work, prepare and submit a special report. List chain of events, persons participating, response by Contractor's personnel, evaluation of results or effects, and similar pertinent information. Advise Owner in advance when these events are known or predictable.

PART 3 - EXECUTION

3.1 CONTRACTOR'S CONSTRUCTION SCHEDULE

A. Scheduling Consultant: Engage a consultant to provide planning, evaluation, and reporting using CPM scheduling.

1. In-House Option: Owner may waive the requirement to retain a consultant if Contractor employs skilled personnel with experience in CPM scheduling and reporting techniques. Submit qualifications.

NOT FOR BIDDING

2. Meetings: Scheduling consultant shall attend all meetings related to Project progress, alleged delays, and time impact.

B. Contractor's Construction Schedule Updating: At biweekly intervals, update schedule to reflect actual construction progress and activities. Issue schedule one week before each regularly scheduled progress meeting.

1. Revise schedule immediately after each meeting or other activity where revisions have been recognized or made. Issue updated schedule concurrently with the report of each such meeting.
2. Include a report with updated schedule that indicates every change, including, but not limited to, changes in logic, durations, actual starts and finishes, and activity durations.
3. As the Work progresses, indicate final completion percentage for each activity.

C. Distribution: Distribute copies of approved schedule to Architect, Owner, separate contractors, testing and inspecting agencies, and other parties identified by Contractor with a need-to-know schedule responsibility.

1. Post copies in Project meeting rooms and temporary field offices.
2. When revisions are made, distribute updated schedules to the same parties and post in the same locations. Delete parties from distribution when they have completed their assigned portion of the Work and are no longer involved in performance of construction activities.

END OF SECTION 013200

NOT FOR BIDDING

SECTION 013233 - PHOTOGRAPHIC DOCUMENTATION

PART 1 - GENERAL

1.1 RELATED DOCUMENTS

A. Drawings and general provisions of the Contract, including General and Supplementary Conditions and other Division 01 Specification Sections, apply to this Section.

1.2 SUMMARY

A. Section includes administrative and procedural requirements for the following:

1. Preconstruction photographs.
2. Periodic construction photographs.
3. Final completion construction photographs.

B. Related Requirements:

1. Section 013300 "Submittal Procedures" for submitting photographic documentation.
2. Section 017700 "Closeout Procedures" for submitting photographic documentation as project record documents at Project closeout.
3. Section 017900 "Demonstration and Training" for submitting video recordings of demonstration of equipment and training of Owner's personnel.
4. Section 311000 "Site Clearing" for photographic documentation before site clearing operations commence.

1.3 INFORMATIONAL SUBMITTALS

A. Digital Photographs: Submit image files within three days of taking photographs.

1. Digital Camera: Minimum sensor resolution of 8 megapixels.
2. Format: Minimum 3200 by 2400 pixels, in unaltered original files, with same aspect ratio as the sensor, uncropped, date and time stamped, in folder named by date of photograph, accompanied by key plan file.
3. Identification: Provide the following information with each image description in file metadata tag:

   a. Name of Project.
   b. Name and contact information for photographer.
   c. Name of Architect.
   d. Name of Contractor.
   e. Date photograph was taken.
   f. Description of vantage point, indicating location, direction (by compass point), and elevation or story of construction.
   g. Unique sequential identifier keyed to accompanying key plan.

NOT FOR BIDDING

1.4 USAGE RIGHTS

A. Obtain and transfer copyright usage rights from photographer to Owner for unlimited reproduction of photographic documentation.

PART 2 - PRODUCTS

2.1 PHOTOGRAPHIC MEDIA

A. Digital Images: Provide images in JPG format, produced by a digital camera with minimum sensor size of 8 megapixels, and at an image resolution of not less than 3200 by 2400 pixels.

PART 3 - EXECUTION

3.1 CONSTRUCTION PHOTOGRAPHS

A. General: Take photographs using the maximum range of depth of field, and that are in focus, to clearly show the Work. Photographs with blurry or out-of-focus areas will not be accepted.

1. Maintain key plan with each set of construction photographs that identifies each photographic location.

B. Digital Images: Submit digital images exactly as originally recorded in the digital camera, without alteration, manipulation, editing or modifications using image-editing software.

1. Date and Time: Include date and time in file name for each image.
2. Field Office Images: Maintain one set of images accessible in the field office at Project site, available at all times for reference. Identify images in the same manner as those submitted to Architect.

C. Preconstruction Photographs: Before commencement of excavation, take photographs of Project site and surrounding properties, including existing items to remain during construction, from different vantage points, as directed by Architect.

1. Flag excavation areas before taking construction photographs.
2. Take 20 photographs to show existing conditions adjacent to property before starting the Work.
3. Take 20 photographs of existing buildings either on or adjoining property to accurately record physical conditions at start of construction.
4. Take additional photographs as required to record settlement or cracking of adjacent structures, pavements, and improvements.

D. Periodic Construction Photographs: Take 20 photographsweekly, with timing each month adjusted to coincide with the cutoff date associated with each Application for Payment. Select vantage points to show status of construction and progress since last photographs were taken.

NOT FOR BIDDING

E. Final Completion Construction Photographs: Take 20 color photographs after date of Substantial Completion for submission as project record documents. Architect will inform photographer of desired vantage points.

1. Do not include date stamp.

END OF SECTION 013233

NOT FOR BIDDING

(PAGE LEFT BLANK)

NOT FOR BIDDING

SECTION 013300 - SUBMITTAL PROCEDURES

PART 1 - GENERAL

1.1 RELATED DOCUMENTS

A. Drawings and general provisions of the Contract, including General and Supplementary Conditions and other Division 01 Specification Sections, apply to this Section.

1.2 SUMMARY

A. Section includes requirements for the submittal schedule and administrative and procedural requirements for submitting Shop Drawings, Product Data, Samples, and other submittals.

B. Related Requirements:

1. Section 012900 "Payment Procedures" for submitting Applications for Payment and the schedule of values.
2. Section 013200 "Construction Progress Documentation" for submitting schedules and reports, including Contractor's construction schedule.
3. Section 017823 "Operation and Maintenance Data" for submitting operation and maintenance manuals.
4. Section 017839 "Project Record Documents" for submitting record Drawings, record Specifications, and record Product Data.
5. Section 017900 "Demonstration and Training" for submitting video recordings of demonstration of equipment and training of Owner's personnel.

1.3 DEFINITIONS

A. Action Submittals: Written and graphic information and physical samples that require Architect's responsive action. Action submittals are those submittals indicated in individual Specification Sections as "action submittals."

B. Informational Submittals: Written and graphic information and physical samples that do not require Architect's responsive action. Submittals may be rejected for not complying with requirements. Informational submittals are those submittals indicated in individual Specification Sections as "informational submittals."

C. File Transfer Protocol (FTP): Communications protocol that enables transfer of files to and from another computer over a network and that serves as the basis for standard Internet protocols. An FTP site is a portion of a network located outside of network firewalls within which internal and external users are able to access files.

D. Portable Document Format (PDF): An open standard file format licensed by Adobe Systems used for representing documents in a device-independent and display resolution-independent fixed-layout document format.

NOT FOR BIDDING

1.4 ACTION SUBMITTALS

A. Submittal Schedule: Submit a schedule of submittals, arranged in chronological order by dates required by construction schedule. Include time required for review, ordering, manufacturing, fabrication, and delivery when establishing dates. Include additional time required for making corrections or revisions to submittals noted by Architect and additional time for handling and reviewing submittals required by those corrections.

1. Coordinate submittal schedule with list of subcontracts, the schedule of values, and Contractor's construction schedule.
2. Initial Submittal: Submit concurrently with startup construction schedule. Include submittals required during the first 60 days of construction. List those submittals required to maintain orderly progress of the Work and those required early because of long lead time for manufacture or fabrication.
3. Final Submittal: Submit concurrently with the first complete submittal of Contractor's construction schedule.

    a. Submit revised submittal schedule to reflect changes in current status and timing for submittals.

4. Format: Arrange the following information in a tabular format:

    a. Scheduled date for first submittal.
    b. Specification Section number and title.
    c. Submittal category: Action; informational.
    d. Name of subcontractor.
    e. Description of the Work covered.
    f. Scheduled date for Architect's final release or approval.
    g. Scheduled date of fabrication.
    h. Scheduled dates for purchasing.
    i. Scheduled dates for installation.
    j. Activity or event number.

1.5 SUBMITTAL ADMINISTRATIVE REQUIREMENTS

A. Architect's Digital Data Files: Electronic digital data files of the Contract Drawings will **not** be provided by Architect for Contractor's use in preparing submittals.

1. Architect will furnish Contractor one set of digital data drawing files of the Contract Drawings for use in preparing Shop Drawings.

    a. Architect makes no representations as to the accuracy or completeness of digital data drawing files as they relate to the Contract Drawings.
    b. Contractor shall execute a data licensing agreement in the form of Agreement form acceptable to Owner and Architect.

B. Coordination: Coordinate preparation and processing of submittals with performance of construction activities.

NOT FOR BIDDING

1. Coordinate each submittal with fabrication, purchasing, testing, delivery, other submittals, and related activities that require sequential activity.
2. Submit all submittal items required for each Specification Section concurrently unless partial submittals for portions of the Work are indicated on approved submittal schedule.
3. Submit action submittals and informational submittals required by the same Specification Section as separate packages under separate transmittals.
4. Coordinate transmittal of different types of submittals for related parts of the Work so processing will not be delayed because of need to review submittals concurrently for coordination.

    a. Architect reserves the right to withhold action on a submittal requiring coordination with other submittals until related submittals are received.

C. Processing Time: Allow time for submittal review, including time for resubmittals, as follows. Time for review shall commence on Architect's receipt of submittal. No extension of the Contract Time will be authorized because of failure to transmit submittals enough in advance of the Work to permit processing, including resubmittals.

1. Initial Review: Allow 15 days for initial review of each submittal. Allow additional time if coordination with subsequent submittals is required. Architect will advise Contractor when a submittal being processed must be delayed for coordination.
2. Intermediate Review: If intermediate submittal is necessary, process it in same manner as initial submittal.
3. Resubmittal Review: Allow 15 days for review of each resubmittal.
4. Sequential Review: Where sequential review of submittals by Architect's consultants, Owner, or other parties is indicated, allow 21 days for initial review of each submittal.

5. Concurrent Consultant Review: Where the Contract Documents indicate that submittals may be transmitted simultaneously to Architect and to Architect's consultants, allow 15 days for review of each submittal. Submittal will be returned to Architect before being returned to Contractor.

D. Paper Submittals: Place a permanent label or title block on each submittal item for identification.

1. Indicate name of firm or entity that prepared each submittal on label or title block.
2. Provide a space approximately 6 by 8 inches (150 by 200 mm) on label or beside title block to record Contractor's review and approval markings and action taken by Architect.
3. Include the following information for processing and recording action taken:

    a. Project name.
    b. Date.
    c. Name of Architect.
    d. Name of Contractor.
    e. Name of subcontractor.
    f. Name of supplier.
    g. Name of manufacturer.
    h. Submittal number or other unique identifier, including revision identifier.

        1) Submittal number shall use Specification Section number followed by a decimal point and then a sequential number (e.g., 061000.01). Resubmittals

NOT FOR BIDDING

shall include an alphabetic suffix after another decimal point (e.g., 061000.01.A).

i. Number and title of appropriate Specification Section.
j. Drawing number and detail references, as appropriate.
k. Location(s) where product is to be installed, as appropriate.
l. Other necessary identification.

4. Additional Paper Copies: Unless additional copies are required for final submittal, and unless Architect observes noncompliance with provisions in the Contract Documents, initial submittal may serve as final submittal.

   a. Submit one copy of submittal to concurrent reviewer in addition to specified number of copies to Architect.

5. Transmittal for Paper Submittals: Assemble each submittal individually and appropriately for transmittal and handling. Transmit each submittal using a transmittal form. Architect will **return without review** submittals received from sources other than Contractor.

   a. Transmittal Form for Paper Submittals: Provide locations on form for the following information:

      1) Project name.
      2) Date.
      3) Destination (To:).
      4) Source (From:).
      5) Name and address of Architect.
      6) Name of Contractor.
      7) Name of firm or entity that prepared submittal.
      8) Names of subcontractor, manufacturer, and supplier.
      9) Category and type of submittal.
      10) Submittal purpose and description.
      11) Specification Section number and title.
      12) Specification paragraph number or drawing designation and generic name for each of multiple items.
      13) Drawing number and detail references, as appropriate.
      14) Indication of full or partial submittal.
      15) Submittal and transmittal distribution record.
      16) Remarks.
      17) Signature of transmitter.

E. Electronic Submittals: Identify and incorporate information in each electronic submittal file as follows:

1. Assemble complete submittal package into a single indexed file incorporating submittal requirements of a single Specification Section and transmittal form with links enabling navigation to each item.
2. Name file with submittal number or other unique identifier, including revision identifier.

   a. File name shall use project identifier and Specification Section number followed by a decimal point and then a sequential number (e.g., LNHS-061000.01).

NOT FOR BIDDING

Resubmittals shall include an alphabetic suffix after another decimal point (e.g., LNHS-061000.01.01).

3. Provide means for insertion to permanently record Contractor's review and approval markings and action taken by Architect.
4. Transmittal Form for Electronic Submittals: Use software-generated form from electronic project management software acceptable to Owner, containing the following information:

   a. Project name.
   b. Date.
   c. Name and address of Architect.
   d. Name of Contractor.
   e. Name of firm or entity that prepared submittal.
   f. Names of subcontractor, manufacturer, and supplier.
   g. Category and type of submittal.
   h. Submittal purpose and description.
   i. Specification Section number and title.
   j. Specification paragraph number or drawing designation and generic name for each of multiple items.
   k. Drawing number and detail references, as appropriate.
   l. Location(s) where product is to be installed, as appropriate.
   m. Related physical samples submitted directly.
   n. Indication of full or partial submittal.
   o. Submittal and transmittal distribution record.
   p. Other necessary identification.
   q. Remarks.

5. Metadata: Include the following information as keywords in the electronic submittal file metadata:

   a. Project name.
   b. Number and title of appropriate Specification Section.
   c. Manufacturer name.
   d. Product name.

F. Options: Identify options requiring selection by Architect.

G. Deviations and Additional Information: On an attached separate sheet, prepared on Contractor's letterhead, record relevant information, requests for data, revisions other than those requested by Architect on previous submittals, and deviations from requirements in the Contract Documents, including minor variations and limitations. Include same identification information as related submittal.

H. Resubmittals: Make resubmittals in same form and number of copies as initial submittal.

1. Note date and content of previous submittal.
2. Note date and content of revision in label or title block and clearly indicate extent of revision.
3. Resubmit submittals until they are marked with approval notation from Architect's action stamp.

NOT FOR BIDDING

I. Distribution: Furnish copies of final submittals to manufacturers, subcontractors, suppliers, fabricators, installers, authorities having jurisdiction, and others as necessary for performance of construction activities. Show distribution on transmittal forms.

J. Use for Construction: Retain complete copies of submittals on Project site. Use only final action submittals that are marked with approval notation from Architect's action stamp.

PART 2 - PRODUCTS

2.1 SUBMITTAL PROCEDURES

A. General Submittal Procedure Requirements: Prepare and submit submittals required by individual Specification Sections. Types of submittals are indicated in individual Specification Sections.

1. Post electronic submittals as PDF electronic files directly to Architect's FTP site specifically established for Project.

a. Architect will return annotated file. Annotate and retain one copy of file as an electronic Project record document file.

2. Submit electronic submittals via email as PDF electronic files.

a. Architect will return annotated file. Annotate and retain one copy of file as an electronic Project record document file.

3. Action Submittals: Submit three paper copies of each submittal unless otherwise indicated. Architect will retain two copies.
4. Informational Submittals: Submit two paper copies of each submittal unless otherwise indicated. Architect will not retain copies.
5. Certificates and Certifications Submittals: Provide a statement that includes signature of entity responsible for preparing certification. Certificates and certifications shall be signed by an officer or other individual authorized to sign documents on behalf of that entity.

a. Provide a digital signature with digital certificate on electronically submitted certificates and certifications where indicated.
b. Provide a notarized statement on original paper copy certificates and certifications where indicated.

B. Product Data: Collect information into a single submittal for each element of construction and type of product or equipment.

1. If information must be specially prepared for submittal because standard published data are not suitable for use, submit as Shop Drawings, not as Product Data.
2. Mark each copy of each submittal to show which products and options are applicable.
3. Include the following information, as applicable:

a. Manufacturer's catalog cuts.

NOT FOR BIDDING

b. Manufacturer's product specifications.
c. Standard color charts.
d. Statement of compliance with specified referenced standards.
e. Testing by recognized testing agency.
f. Application of testing agency labels and seals.
g. Notation of coordination requirements.
h. Availability and delivery time information.

4. For equipment, include the following in addition to the above, as applicable:

a. Wiring diagrams showing factory-installed wiring.
b. Printed performance curves.
c. Operational range diagrams.
d. Clearances required to other construction, if not indicated on accompanying Shop Drawings.

5. Submit Product Data before or concurrent with Samples.
6. Submit Product Data in the following format:

a. PDF electronic file.
b. Three paper copies of Product Data unless otherwise indicated. Architect will return two copies.

C. Shop Drawings: Prepare Project-specific information, drawn accurately to scale. Do not base Shop Drawings on reproductions of the Contract Documents or standard printed data, unless submittal based on Architect's digital data drawing files is otherwise permitted.

1. Preparation: Fully illustrate requirements in the Contract Documents. Include the following information, as applicable:

a. Identification of products.
b. Schedules.
c. Compliance with specified standards.
d. Notation of coordination requirements.
e. Notation of dimensions established by field measurement.
f. Relationship and attachment to adjoining construction clearly indicated.
g. Seal and signature of professional engineer if specified.

2. Sheet Size: Except for templates, patterns, and similar full-size drawings, submit Shop Drawings on sheets at least 8-1/2 by 11 inches (215 by 280 mm), but no larger than 30 by 42 inches (750 by 1067 mm).
3. Submit Shop Drawings in the following format:

a. PDF electronic file.
b. Two opaque (bond) copies of each submittal. Architect will return one copy(ies).
c. [illegible] will be returned.

D. Samples: Submit Samples for review of kind, color, pattern, and texture for a check of these characteristics with other elements and for a comparison of these characteristics between submittal and actual component as delivered and installed.

NOT FOR BIDDING

1. Transmit Samples that contain multiple, related components such as accessories together in one submittal package.
2. Identification: Attach label on unexposed side of Samples that includes the following:

    a. Generic description of Sample.
    b. Product name and name of manufacturer.
    c. Sample source.
    d. Number and title of applicable Specification Section.
    e. Specification paragraph number and generic name of each item.

3. For projects where electronic submittals are required, provide corresponding electronic submittal of Sample transmittal, digital image file illustrating Sample characteristics, and identification information for record.
4. Disposition: Maintain sets of approved Samples at Project site, available for quality-control comparisons throughout the course of construction activity. Sample sets may be used to determine final acceptance of construction associated with each set.

    a. Samples that may be incorporated into the Work are indicated in individual Specification Sections. Such Samples must be in an undamaged condition at time of use.
    b. Samples not incorporated into the Work, or otherwise designated as Owner's property, are the property of Contractor.

5. Samples for Initial Selection: Submit manufacturer's color charts consisting of units or sections of units showing the full range of colors, textures, and patterns available.

    a. Number of Samples: Submit one full set(s) of available choices where color, pattern, texture, or similar characteristics are required to be selected from manufacturer's product line. Architect will return submittal with options selected.

6. Samples for Verification: Submit full-size units or Samples of size indicated, prepared from same material to be used for the Work, cured and finished in manner specified, and physically identical with material or product proposed for use, and that show full range of color and texture variations expected. Samples include, but are not limited to, the following: partial sections of manufactured or fabricated components; small cuts or containers of materials; complete units of repetitively used materials; swatches showing color, texture, and pattern; color range sets; and components used for independent testing and inspection.

    a. Number of Samples: Submit three sets of Samples. Architect will retain two Sample sets; remainder will be returned.

        1) Submit a single Sample where assembly details, workmanship, fabrication techniques, connections, operation, and other similar characteristics are to be demonstrated.
        2) If variation in color, pattern, texture, or other characteristic is inherent in material or product represented by a Sample, submit at least three sets of paired units that show approximate limits of variations.

NOT FOR BIDDING

E. Product Schedule: As required in individual Specification Sections, prepare a written summary indicating types of products required for the Work and their intended location. Include the following information in tabular form:

1. Type of product. Include unique identifier for each product indicated in the Contract Documents or assigned by Contractor if none is indicated.
2. Manufacturer and product name, and model number if applicable.
3. Number and name of room or space.
4. Location within room or space.
5. Submit product schedule in the following format:

   a. PDF electronic file.
   b. Three paper copies of product schedule or list unless otherwise indicated. Architect will return two copies.

F. Contractor's Construction Schedule: Comply with requirements specified in Section 013200 "Construction Progress Documentation."

G. Application for Payment and Schedule of Values: Comply with requirements specified in Section 012900 "Payment Procedures."

H. Test and Inspection Reports and Schedule of Tests and Inspections Submittals: Comply with requirements specified in Section 014000 "Quality Requirements."

I. Closeout Submittals and Maintenance Material Submittals: Comply with requirements specified in Section 017700 "Closeout Procedures."

J. Maintenance Data: Comply with requirements specified in Section 017823 "Operation and Maintenance Data."

K. Qualification Data: Prepare written information that demonstrates capabilities and experience of firm or person. Include lists of completed projects with project names and addresses, contact information of architects and owners, and other information specified.

L. Welding Certificates: Prepare written certification that welding procedures and personnel comply with requirements in the Contract Documents. Submit record of Welding Procedure Specification and Procedure Qualification Record on AWS forms. Include names of firms and personnel certified.

M. Installer Certificates: Submit written statements on manufacturer's letterhead certifying that Installer complies with requirements in the Contract Documents and, where required, is authorized by manufacturer for this specific Project.

N. Manufacturer Certificates: Submit written statements on manufacturer's letterhead certifying that manufacturer complies with requirements in the Contract Documents. Include evidence of manufacturing experience where required.

O. Product Certificates: Submit written statements on manufacturer's letterhead certifying that product complies with requirements in the Contract Documents.

NOT FOR BIDDING

P. Material Certificates: Submit written statements on manufacturer's letterhead certifying that material complies with requirements in the Contract Documents.

Q. Material Test Reports: Submit reports written by a qualified testing agency, on testing agency's standard form, indicating and interpreting test results of material for compliance with requirements in the Contract Documents.

R. Product Test Reports: Submit written reports indicating that current product produced by manufacturer complies with requirements in the Contract Documents. Base reports on evaluation of tests performed by manufacturer and witnessed by a qualified testing agency, or on comprehensive tests performed by a qualified testing agency.

S. Research Reports: Submit written evidence, from a model code organization acceptable to authorities having jurisdiction, that product complies with building code in effect for Project. Include the following information:

1. Name of evaluation organization.
2. Date of evaluation.
3. Time period when report is in effect.
4. Product and manufacturers' names.
5. Description of product.
6. Test procedures and results.
7. Limitations of use.

T. Preconstruction Test Reports: Submit reports written by a qualified testing agency, on testing agency's standard form, indicating and interpreting results of tests performed before installation of product, for compliance with performance requirements in the Contract Documents.

U. Compatibility Test Reports: Submit reports written by a qualified testing agency, on testing agency's standard form, indicating and interpreting results of compatibility tests performed before installation of product. Include written recommendations for primers and substrate preparation needed for adhesion.

V. Field Test Reports: Submit written reports indicating and interpreting results of field tests performed either during installation of product or after product is installed in its final location, for compliance with requirements in the Contract Documents.

W. Design Data: Prepare and submit written and graphic information, including, but not limited to, performance and design criteria, list of applicable codes and regulations, and calculations. Include list of assumptions and other performance and design criteria and a summary of loads. Include load diagrams if applicable. Provide name and version of software, if any, used for calculations. Include page numbers.

2.2 DELEGATED DESIGN SERVICES

A. Performance and Design Criteria: Where professional design services or certifications by a design professional are specifically required of Contractor by the Contract Documents, provide products and systems complying with specific performance and design criteria indicated.

NOT FOR BIDDING

1. If criteria indicated are not sufficient to perform services or certification required, submit a written request for additional information to Architect.

B. Delegated-Design Services Certification: In addition to Shop Drawings, Product Data, and other required submittals, submit digitally signed PDF electronic file and three paper copies of certificate, signed and sealed by the responsible design professional, for each product and system specifically assigned to Contractor to be designed or certified by a design professional.

1. Indicate that products and systems comply with performance and design criteria in the Contract Documents. Include list of codes, loads, and other factors used in performing these services.

PART 3 - EXECUTION

3.1 CONTRACTOR'S REVIEW

A. Action and Informational Submittals: Review each submittal and check for coordination with other Work of the Contract and for compliance with the Contract Documents. Note corrections and field dimensions. Mark with approval stamp before submitting to Architect.

B. Project Closeout and Maintenance Material Submittals: See requirements in Section 017700 "Closeout Procedures."

C. Approval Stamp: Stamp each submittal with a uniform, approval stamp. Include Project name and location, submittal number, Specification Section title and number, name of reviewer, date of Contractor's approval, and statement certifying that submittal has been reviewed, checked, and approved for compliance with the Contract Documents.

3.2 ARCHITECT'S ACTION

A. Action Submittals: Architect will review each submittal, make marks to indicate corrections or revisions required, and return it. Architect will stamp each submittal with an action stamp and will mark stamp appropriately to indicate action.

B. Informational Submittals: Architect will review each submittal and will not return it, or will return it if it does not comply with requirements. Architect will forward each submittal to appropriate party.

C. Partial submittals prepared for a portion of the Work will be reviewed when use of partial submittals has received prior approval from Architect.

D. Incomplete submittals are unacceptable, will be considered nonresponsive, and will be returned for resubmittal without review.

E. Submittals not required by the Contract Documents may be returned by the Architect without action.

END OF SECTION 013300

NOT FOR BIDDING

SECTION 014000 - QUALITY REQUIREMENTS

PART 1 - GENERAL

1.1 RELATED DOCUMENTS

A. Drawings and general provisions of the Contract, including General and Supplementary Conditions and other Division 01 Specification Sections, apply to this Section.

1.2 SUMMARY

A. Section includes administrative and procedural requirements for quality assurance and quality control.

B. Testing and inspecting services are required to verify compliance with requirements specified or indicated. These services do not relieve Contractor of responsibility for compliance with the Contract Document requirements.

1. Specific quality-assurance and -control requirements for individual construction activities are specified in the Sections that specify those activities. Requirements in those Sections may also cover production of standard products.
2. Specified tests, inspections, and related actions do not limit Contractor's other quality-assurance and -control procedures that facilitate compliance with the Contract Document requirements.
3. Requirements for Contractor to provide quality-assurance and -control services required by Architect, Owner, or authorities having jurisdiction are not limited by provisions of this Section.
4. Specific test and inspection requirements are not specified in this Section.

C. Related Requirements:

1. Section 012100 "Allowances" for testing and inspecting allowances.

1.3 DEFINITIONS

A. Quality-Assurance Services: Activities, actions, and procedures performed before and during execution of the Work to guard against defects and deficiencies and substantiate that proposed construction will comply with requirements.

B. Quality-Control Services: Tests, inspections, procedures, and related actions during and after execution of the Work to evaluate that actual products incorporated into the Work and completed construction comply with requirements. Services do not include contract enforcement activities performed by Architect.

C. Preconstruction Testing: Tests and inspections performed specifically for Project before products and materials are incorporated into the Work, to verify performance or compliance with specified criteria.

NOT FOR BIDDING

D. Product Testing: Tests and inspections that are performed by an NRTL, an NVLAP, or a testing agency qualified to conduct product testing and acceptable to authorities having jurisdiction, to establish product performance and compliance with specified requirements.

E. Source Quality-Control Testing: Tests and inspections that are performed at the source, e.g., plant, mill, factory, or shop.

F. Field Quality-Control Testing: Tests and inspections that are performed on-site for installation of the Work and for completed Work.

G. Testing Agency: An entity engaged to perform specific tests, inspections, or both. Testing laboratory shall mean the same as testing agency.

H. Installer/Applicator/Erector: Contractor or another entity engaged by Contractor as an employee, Subcontractor, or Sub-subcontractor, to perform a particular construction operation, including installation, erection, application, and similar operations.

1. Use of trade-specific terminology in referring to a trade or entity does not require that certain construction activities be performed by accredited or unionized individuals, or that requirements specified apply exclusively to specific trade(s).

I. Experienced: When used with an entity or individual, "experienced" means having successfully completed a minimum of five previous projects similar in nature, size, and extent to this Project; being familiar with special requirements indicated; and having complied with requirements of authorities having jurisdiction.

1.4 CONFLICTING REQUIREMENTS

A. Referenced Standards: If compliance with two or more standards is specified and the standards establish different or conflicting requirements for minimum quantities or quality levels, comply with the most stringent requirement. Refer conflicting requirements that are different, but apparently equal, to Architect for a decision before proceeding.

B. Minimum Quantity or Quality Levels: The quantity or quality level shown or specified shall be the minimum provided or performed. The actual installation may comply exactly with the minimum quantity or quality specified, or it may exceed the minimum within reasonable limits. To comply with these requirements, indicated numeric values are minimum or maximum, as appropriate, for the context of requirements. Refer uncertainties to Architect for a decision before proceeding.

1.5 INFORMATIONAL SUBMITTALS

A. Contractor's Quality-Control Plan: For quality-assurance and quality-control activities and responsibilities.

B. Qualification Data : For Contractor's quality-control personnel.

NOT FOR BIDDING

C. Contractor's Statement of Responsibility: When required by authorities having jurisdiction, submit copy of written statement of responsibility sent to authorities having jurisdiction before starting work on the following systems:

1. Seismic-force-resisting system, designated seismic system, or component listed in the designated seismic system quality-assurance plan prepared by Architect.
2. Main wind-force-resisting system or a wind-resisting component listed in the wind-force-resisting system quality-assurance plan prepared by Architect.

D. Testing Agency Qualifications: For testing agencies specified in "Quality Assurance" Article to demonstrate their capabilities and experience. Include proof of qualifications in the form of a recent report on the inspection of the testing agency by a recognized authority.

E. Schedule of Tests and Inspections: Prepare in tabular form and include the following:

1. Specification Section number and title.
2. Entity responsible for performing tests and inspections.
3. Description of test and inspection.
4. Identification of applicable standards.
5. Identification of test and inspection methods.
6. Number of tests and inspections required.
7. Time schedule or time span for tests and inspections.
8. Requirements for obtaining samples.
9. Unique characteristics of each quality-control service.

1.6 CONTRACTOR'S QUALITY-CONTROL PLAN

A. Quality-Control Plan, General: Submit quality-control plan within 10 days of Notice to Proceed, and not less than five days prior to preconstruction conference. Submit in format acceptable to Architect. Identify personnel, procedures, controls, instructions, tests, records, and forms to be used to carry out Contractor's quality-assurance and quality-control responsibilities. Coordinate with Contractor's construction schedule.

B. Quality-Control Personnel Qualifications: Engage qualified full-time personnel trained and experienced in managing and executing quality-assurance and quality-control procedures similar in nature and extent to those required for Project.

1. Project quality-control manager may also serve as Project superintendent.

C. Submittal Procedures: Describe procedures for ensuring compliance with requirements through review and management of submittal process. Indicate qualifications of personnel responsible for submittal review.

D. Testing and Inspection: In quality-control plan, include a comprehensive schedule of Work requiring testing or inspection, including the following:

1. Contractor-performed tests and inspections including subcontractor-performed tests and inspections. Include required tests and inspections and Contractor-elected tests and inspections.

NOT FOR BIDDING

2. Special inspections required by authorities having jurisdiction and indicated on the "Statement of Special Inspections."
3. Owner-performed tests and inspections indicated in the Contract Documents.

E. Continuous Inspection of Workmanship: Describe process for continuous inspection during construction to identify and correct deficiencies in workmanship in addition to testing and inspection specified. Indicate types of corrective actions to be required to bring work into compliance with standards of workmanship established by Contract requirements and approved mockups.

F. Monitoring and Documentation: Maintain testing and inspection reports including log of approved and rejected results. Include work Architect has indicated as nonconforming or defective. Indicate corrective actions taken to bring nonconforming work into compliance with requirements. Comply with requirements of authorities having jurisdiction.

1.7 REPORTS AND DOCUMENTS

A. Test and Inspection Reports: Prepare and submit certified written reports specified in other Sections. Include the following:

1. Date of issue.
2. Project title and number.
3. Name, address, and telephone number of testing agency.
4. Dates and locations of samples and tests or inspections.
5. Names of individuals making tests and inspections.
6. Description of the Work and test and inspection method.
7. Identification of product and Specification Section.
8. Complete test or inspection data.
9. Test and inspection results and an interpretation of test results.
10. Record of temperature and weather conditions at time of sample taking and testing and inspecting.
11. Comments or professional opinion on whether tested or inspected Work complies with the Contract Document requirements.
12. Name and signature of laboratory inspector.
13. Recommendations on retesting and reinspecting.

B. Manufacturer's Technical Representative's Field Reports: Prepare written information documenting manufacturer's technical representative's tests and inspections specified in other Sections. Include the following:

1. Name, address, and telephone number of technical representative making report.
2. Statement on condition of substrates and their acceptability for installation of product.
3. Statement that products at Project site comply with requirements.
4. Summary of installation procedures being followed, whether they comply with requirements and, if not, what corrective action was taken.
5. Results of operational and other tests and a statement of whether observed performance complies with requirements.
6. Statement whether conditions, products, and installation will affect warranty.
7. Other required items indicated in individual Specification Sections.

NOT FOR BIDDING

C. Factory-Authorized Service Representative's Reports: Prepare written information documenting manufacturer's factory-authorized service representative's tests and inspections specified in other Sections. Include the following:

1. Name, address, and telephone number of factory-authorized service representative making report.
2. Statement that equipment complies with requirements.
3. Results of operational and other tests and a statement of whether observed performance complies with requirements.
4. Statement whether conditions, products, and installation will affect warranty.
5. Other required items indicated in individual Specification Sections.

D. Permits, Licenses, and Certificates: For Owner's records, submit copies of permits, licenses, certifications, inspection reports, releases, jurisdictional settlements, notices, receipts for fee payments, judgments, correspondence, records, and similar documents, established for compliance with standards and regulations bearing on performance of the Work.

1.8 QUALITY ASSURANCE

A. General: Qualifications paragraphs in this article establish the minimum qualification levels required; individual Specification Sections specify additional requirements.

B. Manufacturer Qualifications: A firm experienced in manufacturing products or systems similar to those indicated for this Project and with a record of successful in-service performance, as well as sufficient production capacity to produce required units.

C. Fabricator Qualifications: A firm experienced in producing products similar to those indicated for this Project and with a record of successful in-service performance, as well as sufficient production capacity to produce required units.

D. Installer Qualifications: A firm or individual experienced in installing, erecting, or assembling work similar in material, design, and extent to that indicated for this Project, whose work has resulted in construction with a record of successful in-service performance.

E. Professional Engineer Qualifications: A professional engineer who is legally qualified to practice in jurisdiction where Project is located and who is experienced in providing engineering services of the kind indicated. Engineering services are defined as those performed for installations of the system, assembly, or product that are similar in material, design, and extent to those indicated for this Project.

F. Specialists: Certain Specification Sections require that specific construction activities shall be performed by entities who are recognized experts in those operations. Specialists shall satisfy qualification requirements indicated and shall be engaged for the activities indicated.

1. Requirements of authorities having jurisdiction shall supersede requirements for specialists.

G. Testing Agency Qualifications: An NRTL, an NVLAP, or an independent agency with the experience and capability to conduct testing and inspecting indicated, as documented according

NOT FOR BIDDING

to ASTM E 329; and with additional qualifications specified in individual Sections; and, where required by authorities having jurisdiction, that is acceptable to authorities.

1. NRTL: A nationally recognized testing laboratory according to 29 CFR 1910.7.
2. NVLAP: A testing agency accredited according to NIST's National Voluntary Laboratory Accreditation Program.

H. Manufacturer's Technical Representative Qualifications: An authorized representative of manufacturer who is trained and approved by manufacturer to observe and inspect installation of manufacturer's products that are similar in material, design, and extent to those indicated for this Project.

I. Factory-Authorized Service Representative Qualifications: An authorized representative of manufacturer who is trained and approved by manufacturer to inspect installation of manufacturer's products that are similar in material, design, and extent to those indicated for this Project.

J. Preconstruction Testing: Where testing agency is indicated to perform preconstruction testing for compliance with specified requirements for performance and test methods, comply with the following:

1. Contractor responsibilities include the following:

   a. Provide test specimens representative of proposed products and construction.
   b. Submit specimens in a timely manner with sufficient time for testing and analyzing results to prevent delaying the Work.
   c. Provide sizes and configurations of test assemblies, mockups, and laboratory mockups to adequately demonstrate capability of products to comply with performance requirements.
   d. Build site-assembled test assemblies and mockups using installers who will perform same tasks for Project.
   e. Build laboratory mockups at testing facility using personnel, products, and methods of construction indicated for the completed Work.

2. Testing Agency Responsibilities: Submit a certified written report of each test, inspection, and similar quality-assurance service to Architect, with copy to Contractor. Interpret tests and inspections and state in each report whether tested and inspected work complies with or deviates from the Contract Documents.

1.9 QUALITY CONTROL

A. Owner Responsibilities: Where quality-control services are indicated as Owner's responsibility, Owner will engage a qualified testing agency to perform these services.

1. Owner will furnish Contractor with names, addresses, and telephone numbers of testing agencies engaged and a description of types of testing and inspecting they are engaged to perform.
2. Payment for these services will be made from testing and inspecting allowances, as authorized by Change Orders.

NOT FOR BIDDING

3. Costs for retesting and reinspecting construction that replaces or is necessitated by work that failed to comply with the Contract Documents will be charged to Contractor, and the Contract Sum will be adjusted by Change Order.

B. Contractor Responsibilities: Tests and inspections not explicitly assigned to Owner are Contractor's responsibility. Perform additional quality-control activities required to verify that the Work complies with requirements, whether specified or not.

1. Unless otherwise indicated, provide quality-control services specified and those required by authorities having jurisdiction. Perform quality-control services required of Contractor by authorities having jurisdiction, whether specified or not.
2. Where services are indicated as Contractor's responsibility, engage a qualified testing agency to perform these quality-control services.

   a. Contractor shall not employ same entity engaged by Owner, unless agreed to in writing by Owner.

3. Notify testing agencies at least 24 hours in advance of time when Work that requires testing or inspecting will be performed.
4. Where quality-control services are indicated as Contractor's responsibility, submit a certified written report, in duplicate, of each quality-control service.
5. Testing and inspecting requested by Contractor and not required by the Contract Documents are Contractor's responsibility.
6. Submit additional copies of each written report directly to authorities having jurisdiction, when they so direct.

C. Manufacturer's Field Services: Where indicated, engage a factory-authorized service representative to inspect field-assembled components and equipment installation, including service connections. Report results in writing as specified in Section 013300 "Submittal Procedures."

D. Manufacturer's Technical Services: Where indicated, engage a manufacturer's technical representative to observe and inspect the Work. Manufacturer's technical representative's services include participation in preinstallation conferences, examination of substrates and conditions, verification of materials, observation of Installer activities, inspection of completed portions of the Work, and submittal of written reports.

E. Retesting/Reinspecting: Regardless of whether original tests or inspections were Contractor's responsibility, provide quality-control services, including retesting and reinspecting, for construction that replaced Work that failed to comply with the Contract Documents.

F. Testing Agency Responsibilities: Cooperate with Architect and Contractor in performance of duties. Provide qualified personnel to perform required tests and inspections.

1. Notify Architect and Contractor promptly of irregularities or deficiencies observed in the Work during performance of its services.
2. Determine the location from which test samples will be taken and in which in-situ tests are conducted.
3. Conduct and interpret tests and inspections and state in each report whether tested and inspected work complies with or deviates from requirements.

NOT FOR BIDDING

4. Submit a certified written report, in duplicate, of each test, inspection, and similar quality-control service through Contractor.
5. Do not release, revoke, alter, or increase the Contract Document requirements or approve or accept any portion of the Work.
6. Do not perform any duties of Contractor.

G. Associated Services: Cooperate with agencies performing required tests, inspections, and similar quality-control services, and provide reasonable auxiliary services as requested. Notify agency sufficiently in advance of operations to permit assignment of personnel. Provide the following:

1. Access to the Work.
2. Incidental labor and facilities necessary to facilitate tests and inspections.
3. Adequate quantities of representative samples of materials that require testing and inspecting. Assist agency in obtaining samples.
4. Facilities for storage and field curing of test samples.
5. Delivery of samples to testing agencies.
6. Preliminary design mix proposed for use for materials mixes that require control by testing agency.
7. Security and protection for samples and for testing and inspecting equipment at Project site.

H. Coordination: Coordinate sequence of activities to accommodate required quality-assurance and -control services with a minimum of delay and to avoid necessity of removing and replacing construction to accommodate testing and inspecting.

1. Schedule times for tests, inspections, obtaining samples, and similar activities.

I. Schedule of Tests and Inspections: Prepare a schedule of tests, inspections, and similar quality-control services required by the Contract Documents as a component of Contractor's quality-control plan. Coordinate and submit concurrently with Contractor's construction schedule. Update as the Work progresses.

1. Distribution: Distribute schedule to Owner, Architect, testing agencies, and each party involved in performance of portions of the Work where tests and inspections are required.

1.10 SPECIAL TESTS AND INSPECTIONS

A. Special Tests and Inspections: Engage a qualified testing agency to conduct special tests and inspections required by authorities having jurisdiction as the responsibility of Owner, and as follows:

1. Verifying that manufacturer maintains detailed fabrication and quality-control procedures and reviews the completeness and adequacy of those procedures to perform the Work.
2. Notifying Architect and Contractor promptly of irregularities and deficiencies observed in the Work during performance of its services.
3. Submitting a certified written report of each test, inspection, and similar quality-control service to Architect with copy to Contractor and to authorities having jurisdiction.
4. Submitting a final report of special tests and inspections at Substantial Completion, which includes a list of unresolved deficiencies.

NOT FOR BIDDING

5. Interpreting tests and inspections and stating in each report whether tested and inspected work complies with or deviates from the Contract Documents.
6. Retesting and reinspecting corrected work.

PART 2 - PRODUCTS (Not Used)

PART 3 - EXECUTION

3.1 TEST AND INSPECTION LOG

A. Test and Inspection Log: Prepare a record of tests and inspections. Include the following:

1. Date test or inspection was conducted.
2. Description of the Work tested or inspected.
3. Date test or inspection results were transmitted to Architect.
4. Identification of testing agency or special inspector conducting test or inspection.

B. Maintain log at Project site. Post changes and revisions as they occur. Provide access to test and inspection log for Architect's reference during normal working hours.

3.2 REPAIR AND PROTECTION

A. General: On completion of testing, inspecting, sample taking, and similar services, repair damaged construction and restore substrates and finishes.

1. Provide materials and comply with installation requirements specified in other Specification Sections or matching existing substrates and finishes. Restore patched areas and extend restoration into adjoining areas with durable seams that are as invisible as possible. Comply with the Contract Document requirements for cutting and patching in Section 017300 "Execution."

B. Protect construction exposed by or for quality-control service activities.

C. Repair and protection are Contractor's responsibility, regardless of the assignment of responsibility for quality-control services.

END OF SECTION 014000

NOT FOR BIDDING

(PAGE LEFT BLANK)

NOT FOR BIDDING

SECTION 014200 - REFERENCES

PART 1 - GENERAL

1.1 RELATED DOCUMENTS

A. Drawings and general provisions of the Contract, including General and Supplementary Conditions and other Division 01 Specification Sections, apply to this Section.

1.2 DEFINITIONS

A. General: Basic Contract definitions are included in the Conditions of the Contract.

B. "Approved": When used to convey Architect's action on Contractor's submittals, applications, and requests, "approved" is limited to Architect's duties and responsibilities as stated in the Conditions of the Contract.

C. "Directed": A command or instruction by Architect. Other terms including "requested," "authorized," "selected," "required," and "permitted" have the same meaning as "directed."

D. "Indicated": Requirements expressed by graphic representations or in written form on Drawings, in Specifications, and in other Contract Documents. Other terms including "shown," "noted," "scheduled," and "specified" have the same meaning as "indicated."

E. "Regulations": Laws, ordinances, statutes, and lawful orders issued by authorities having jurisdiction, and rules, conventions, and agreements within the construction industry that control performance of the Work.

F. "Furnish": Supply and deliver to Project site, ready for unloading, unpacking, assembly, installation, and similar operations.

G. "Install": Unload, temporarily store, unpack, assemble, erect, place, anchor, apply, work to dimension, finish, cure, protect, clean, and similar operations at Project site.

H. "Provide": Furnish and install, complete and ready for the intended use.

I. "Project Site": Space available for performing construction activities. The extent of Project site is shown on Drawings and may or may not be identical with the description of the land on which Project is to be built.

1.3 INDUSTRY STANDARDS

A. Applicability of Standards: Unless the Contract Documents include more stringent requirements, applicable construction industry standards have the same force and effect as if bound or copied directly into the Contract Documents to the extent referenced. Such standards are made a part of the Contract Documents by reference.

NOT FOR BIDDING

B. Publication Dates: Comply with standards in effect as of date of the Contract Documents unless otherwise indicated.

C. Copies of Standards: Each entity engaged in construction on Project should be familiar with industry standards applicable to its construction activity. Copies of applicable standards are not bound with the Contract Documents.

1. Where copies of standards are needed to perform a required construction activity, obtain copies directly from publication source.

1.4 ABBREVIATIONS AND ACRONYMS

A. Industry Organizations: Where abbreviations and acronyms are used in Specifications or other Contract Documents, they shall mean the recognized name of the entities indicated in Gale's "Encyclopedia of Associations: National Organizations of the U.S." or in Columbia Books' "National Trade & Professional Associations of the United States."

B. Industry Organizations: Where abbreviations and acronyms are used in Specifications or other Contract Documents, they shall mean the recognized name of the entities in the following list. This information is subject to change and is believed to be accurate as of the date of the Contract Documents.

1. AABC - Associated Air Balance Council; www.aabc.com.
2. AAMA - American Architectural Manufacturers Association; www.aamanet.org.
3. AAPFCO - Association of American Plant Food Control Officials; www.aapfco.org.
4. AASHTO - American Association of State Highway and Transportation Officials; www.transportation.org.
5. AATCC - American Association of Textile Chemists and Colorists; www.aatcc.org.
6. ABMA - American Bearing Manufacturers Association; www.americanbearings.org.
7. ABMA - American Boiler Manufacturers Association; www.abma.com.
8. ACI - American Concrete Institute; (Formerly: ACI International); www.abma.com.
9. ACPA - American Concrete Pipe Association; www.concrete-pipe.org.
10. AEIC - Association of Edison Illuminating Companies, Inc. (The); www.aeic.org.
11. AF&PA - American Forest & Paper Association; www.afandpa.org.
12. AGA - American Gas Association; www.aga.org.
13. AHAM - Association of Home Appliance Manufacturers; www.aham.org.
14. AHRI - Air Conditioning, Heating, and Refrigeration Institute (The); www.ahrinet.org.
15. AI - Asphalt Institute; www.asphaltinstitute.org.
16. AIA - American Institute of Architects (The); www.aia.org.
17. AISC - American Institute of Steel Construction; www.aisc.org.
18. AISI - American Iron and Steel Institute; www.steel.org.
19. AITC - American Institute of Timber Construction; www.aitc-glulam.org.
20. AMCA - Air Movement and Control Association International, Inc.; www.amca.org.
21. ANSI - American National Standards Institute; www.ansi.org.
22. AOSA - Association of Official Seed Analysts, Inc.; www.aosaseed.com.
23. APA - APA - The Engineered Wood Association; www.apawood.org.
24. APA - Architectural Precast Association; www.archprecast.org.
25. API - American Petroleum Institute; www.api.org.
26. ARI - Air-Conditioning & Refrigeration Institute; (See AHRI).
27. ARI - American Refrigeration Institute; (See AHRI).

NOT FOR BIDDING

28. ARMA - Asphalt Roofing Manufacturers Association; www.asphaltroofing.org.
29. ASCE - American Society of Civil Engineers; www.asce.org.
30. ASCE/SEI - American Society of Civil Engineers/Structural Engineering Institute; (See ASCE).
31. ASHRAE - American Society of Heating, Refrigerating and Air-Conditioning Engineers; www.ashrae.org.
32. ASME - ASME International; (American Society of Mechanical Engineers); www.asme.org.
33. ASSE - American Society of Safety Engineers (The); www.asse.org.
34. ASSE - American Society of Sanitary Engineering; www.asse-plumbing.org.
35. ASTM - ASTM International; www.astm.org.
36. ATIS - Alliance for Telecommunications Industry Solutions; www.atis.org.
37. AWEA - American Wind Energy Association; www.awea.org.
38. AWI - Architectural Woodwork Institute; www.awinet.org.
39. AWMAC - Architectural Woodwork Manufacturers Association of Canada; www.awmac.com.
40. AWPA - American Wood Protection Association; www.awpa.com.
41. AWS - American Welding Society; www.aws.org.
42. AWWA - American Water Works Association; www.awwa.org.
43. BHMA - Builders Hardware Manufacturers Association; www.buildershardware.com.
44. BIA - Brick Industry Association (The); www.gobrick.com.
45. BICSI - BICSI, Inc.; www.bicsi.org.
46. BIFMA - BIFMA International; (Business and Institutional Furniture Manufacturer's Association); www.bifma.org.
47. BISSC - Baking Industry Sanitation Standards Committee; www.bissc.org.
48. BWF - Badminton World Federation; (Formerly: International Badminton Federation); www.bissc.org.
49. CDA - Copper Development Association; www.copper.org.
50. CEA - Canadian Electricity Association; www.electricity.ca.
51. CEA - Consumer Electronics Association; www.ce.org.
52. CFFA - Chemical Fabrics and Film Association, Inc.; www.chemicalfabricsandfilm.com.
53. CFSEI - Cold-Formed Steel Engineers Institute; www.cfsei.org.
54. CGA - Compressed Gas Association; www.cganet.com.
55. CIMA - Cellulose Insulation Manufacturers Association; www.cellulose.org.
56. CISCA - Ceilings & Interior Systems Construction Association; www.cisca.org.
57. CISPI - Cast Iron Soil Pipe Institute; www.cispi.org.
58. CLFMI - Chain Link Fence Manufacturers Institute; www.chainlinkinfo.org.
59. CPA - Composite Panel Association; www.pbmdf.com.
60. CRI - Carpet and Rug Institute (The); www.carpet-rug.org.
61. CRRC - Cool Roof Rating Council; www.coolroofs.org.
62. CRSI - Concrete Reinforcing Steel Institute; www.crsi.org.
63. CSA - Canadian Standards Association; www.csa.ca.
64. CSA - CSA International; (Formerly: IAS - International Approval Services); www.csa-international.org.
65. CSI - Construction Specifications Institute (The); www.csinet.org.
66. CSSB - Cedar Shake & Shingle Bureau; www.cedarbureau.org.
67. CTI - Cooling Technology Institute; (Formerly: Cooling Tower Institute); www.cti.org.
68. CWC - Composite Wood Council; (See CPA).
69. DASMA - Door and Access Systems Manufacturers Association; www.dasma.com.
70. DHI - Door and Hardware Institute; www.dhi.org.
71. ECA - Electronic Components Association; (See ECIA).

NOT FOR BIDDING

72. ECAMA - Electronic Components Assemblies & Materials Association; (See ECIA).
73. ECIA - Electronic Components Industry Association; www.eciaonline.org.
74. EIA - Electronic Industries Alliance; (See TIA).
75. EIMA - EIFS Industry Members Association; www.eima.com.
76. EJMA - Expansion Joint Manufacturers Association, Inc.; www.ejma.org.
77. ESD - ESD Association; (Electrostatic Discharge Association); www.esda.org.
78. ESTA - Entertainment Services and Technology Association; (See PLASA).
79. EVO - Efficiency Valuation Organization; www.evo-world.org.
80. FCI - Fluid Controls Institute; www.fluidcontrolsinstitute.org.
81. FIBA - Federation Internationale de Basketball; (The International Basketball Federation); www.fiba.com.
82. FIVB - Federation Internationale de Volleyball; (The International Volleyball Federation); www.fivb.org.
83. FM Approvals - FM Approvals LLC; www.fmglobal.com.
84. FM Global - FM Global; (Formerly: FMG - FM Global); www.fmglobal.com.
85. FRSA - Florida Roofing, Sheet Metal & Air Conditioning Contractors Association, Inc.; www.floridaroof.com.
86. FSA - Fluid Sealing Association; www.fluidsealing.com.
87. FSC - Forest Stewardship Council U.S.; www.fscus.org.
88. GA - Gypsum Association; www.gypsum.org.
89. GANA - Glass Association of North America; www.glasswebsite.com.
90. GS - Green Seal; www.greenseal.org.
91. HI - Hydraulic Institute; www.pumps.org.
92. HI/GAMA - Hydronics Institute/Gas Appliance Manufacturers Association; (See AHRI).
93. HMMA - Hollow Metal Manufacturers Association; (See NAAMM).
94. HPVA - Hardwood Plywood & Veneer Association; www.hpva.org.
95. HPW - H. P. White Laboratory, Inc.; www.hpwhite.com.
96. IAPSC - International Association of Professional Security Consultants; www.iapsc.org.
97. IAS - International Accreditation Service; www.iasonline.org.
98. IAS - International Approval Services; (See CSA).
99. ICBO - International Conference of Building Officials; (See ICC).
100. ICC - International Code Council; www.iccsafe.org.
101. ICEA - Insulated Cable Engineers Association, Inc.; www.icea.net.
102. ICPA - International Cast Polymer Alliance; www.icpa-hq.org.
103. ICRI - International Concrete Repair Institute, Inc.; www.icri.org.
104. IEC - International Electrotechnical Commission; www.iec.ch.
105. IEEE - Institute of Electrical and Electronics Engineers, Inc. (The); www.ieee.org.
106. IES - Illuminating Engineering Society; (Formerly: Illuminating Engineering Society of North America); www.ies.org.
107. IESNA - Illuminating Engineering Society of North America; (See IES).
108. IEST - Institute of Environmental Sciences and Technology; www.iest.org.
109. IGMA - Insulating Glass Manufacturers Alliance; www.igmaonline.org.
110. IGSHPA - International Ground Source Heat Pump Association; www.igshpa.okstate.edu.
111. ILI - Indiana Limestone Institute of America, Inc.; www.iliai.com.
112. Intertek - Intertek Group; (Formerly: ETL SEMCO; Intertek Testing Service NA); www.intertek.com.
113. ISA - International Society of Automation (The); (Formerly: Instrumentation, Systems, and Automation Society); www.isa.org.
114. ISAS - Instrumentation, Systems, and Automation Society (The); (See ISA).

NOT FOR BIDDING

115. ISFA - International Surface Fabricators Association; (Formerly: International Solid Surface Fabricators Association); www.isfanow.org.
116. ISO - International Organization for Standardization; www.iso.org.
117. ISSFA - International Solid Surface Fabricators Association; (See ISFA).
118. ITU - International Telecommunication Union; www.itu.int/home.
119. KCMA - Kitchen Cabinet Manufacturers Association; www.kcma.org.
120. LMA - Laminating Materials Association; (See CPA).
121. LPI - Lightning Protection Institute; www.lightning.org.
122. MBMA - Metal Building Manufacturers Association; www.mbma.com.
123. MCA - Metal Construction Association; www.metalconstruction.org.
124. MFMA - Maple Flooring Manufacturers Association, Inc.; www.maplefloor.org.
125. MFMA - Metal Framing Manufacturers Association, Inc.; www.metalframingmfg.org.
126. MHIA - Material Handling Industry of America; www.mhia.org.
127. MIA - Marble Institute of America; www.marble-institute.com.
128. MMPA - Moulding & Millwork Producers Association; www.wmmpa.com.
129. MPI - Master Painters Institute; www.paintinfo.com.
130. MSS - Manufacturers Standardization Society of The Valve and Fittings Industry Inc.; www.mss-hq.org.
131. NAAMM - National Association of Architectural Metal Manufacturers; www.naamm.org.
132. NACE - NACE International; (National Association of Corrosion Engineers International); www.nace.org.
133. NADCA - National Air Duct Cleaners Association; www.nadca.com.
134. NAIMA - North American Insulation Manufacturers Association; www.naima.org.
135. NBGQA - National Building Granite Quarries Association, Inc.; www.nbgqa.com.
136. NBI - New Buildings Institute; www.newbuildings.org.
137. NCAA - National Collegiate Athletic Association (The); www.ncaa.org.
138. NCMA - National Concrete Masonry Association; www.ncma.org.
139. NEBB - National Environmental Balancing Bureau; www.nebb.org.
140. NECA - National Electrical Contractors Association; www.necanet.org.
141. NeLMA - Northeastern Lumber Manufacturers Association; www.nelma.org.
142. NEMA - National Electrical Manufacturers Association; www.nema.org.
143. NETA - InterNational Electrical Testing Association; www.netaworld.org.
144. NFHS - National Federation of State High School Associations; www.nfhs.org.
145. NFPA - National Fire Protection Association; www.nfpa.org.
146. NFPA - NFPA International; (See NFPA).
147. NFRC - National Fenestration Rating Council; www.nfrc.org.
148. NHLA - National Hardwood Lumber Association; www.nhla.com.
149. NLGA - National Lumber Grades Authority; www.nlga.org.
150. NOFMA - National Oak Flooring Manufacturers Association; (See NWFA).
151. NOMMA - National Ornamental & Miscellaneous Metals Association; www.nomma.org.
152. NRCA - National Roofing Contractors Association; www.nrca.net.
153. NRMCA - National Ready Mixed Concrete Association; www.nrmca.org.
154. NSF - NSF International; www.nsf.org.
155. NSPE - National Society of Professional Engineers; www.nspe.org.
156. NSSGA - National Stone, Sand & Gravel Association; www.nssga.org.
157. NTMA - National Terrazzo & Mosaic Association, Inc. (The); www.ntma.com.
158. NWFA - National Wood Flooring Association; www.nwfa.org.
159. PCI - Precast/Prestressed Concrete Institute; www.pci.org.
160. PDI - Plumbing & Drainage Institute; www.pdionline.org.

NOT FOR BIDDING

161. PLASA - PLASA; (Formerly: ESTA - Entertainment Services and Technology Association); www.plasa.org.
162. RCSC - Research Council on Structural Connections; www.boltcouncil.org.
163. RFCI - Resilient Floor Covering Institute; www.rfci.com.
164. RIS - Redwood Inspection Service; www.redwoodinspection.com.
165. SAE - SAE International; www.sae.org.
166. SCTE - Society of Cable Telecommunications Engineers; www.scte.org.
167. SDI - Steel Deck Institute; www.sdi.org.
168. SDI - Steel Door Institute; www.steeldoor.org.
169. SEFA - Scientific Equipment and Furniture Association (The); www.sefalabs.com.
170. SEI/ASCE - Structural Engineering Institute/American Society of Civil Engineers; (See ASCE).
171. SIA - Security Industry Association; www.siaonline.org.
172. SJI - Steel Joist Institute; www.steeljoist.org.
173. SMA - Screen Manufacturers Association; www.smainfo.org.
174. SMACNA - Sheet Metal and Air Conditioning Contractors' National Association; www.smacna.org.
175. SMPTE - Society of Motion Picture and Television Engineers; www.smpte.org.
176. SPFA - Spray Polyurethane Foam Alliance; www.sprayfoam.org.
177. SPIB - Southern Pine Inspection Bureau; www.spib.org.
178. SPRI - Single Ply Roofing Industry; www.spri.org.
179. SRCC - Solar Rating & Certification Corporation; www.solar-rating.org.
180. SSINA - Specialty Steel Industry of North America; www.ssina.com.
181. SSPC - SSPC: The Society for Protective Coatings; www.sspc.org.
182. STI - Steel Tank Institute; www.steeltank.com.
183. SWI - Steel Window Institute; www.steelwindows.com.
184. SWPA - Submersible Wastewater Pump Association; www.swpa.org.
185. TCA - Tilt-Up Concrete Association; www.tilt-up.org.
186. TCNA - Tile Council of North America, Inc.; www.tileusa.com.
187. TEMA - Tubular Exchanger Manufacturers Association, Inc.; www.tema.org.
188. TIA - Telecommunications Industry Association (The); (Formerly: TIA/EIA - Telecommunications Industry Association/Electronic Industries Alliance); www.tiaonline.org.
189. TIA/EIA - Telecommunications Industry Association/Electronic Industries Alliance; (See TIA).
190. TMS - The Masonry Society; www.masonrysociety.org.
191. TPI - Truss Plate Institute; www.tpinst.org.
192. TPI - Turfgrass Producers International; www.turfgrasssod.org.
193. TRI - Tile Roofing Institute; www.tileroofing.org.
194. UL - Underwriters Laboratories Inc.; www.ul.com.
195. UNI - Uni-Bell PVC Pipe Association; www.uni-bell.org.
196. USAV - USA Volleyball; www.usavolleyball.org.
197. USGBC - U.S. Green Building Council; www.usgbc.org.
198. USITT - United States Institute for Theatre Technology, Inc.; www.usitt.org.
199. WASTEC - Waste Equipment Technology Association; www.wastec.org.
200. WCLIB - West Coast Lumber Inspection Bureau; www.wclib.org.
201. WCMA - Window Covering Manufacturers Association; www.wcmanet.org.
202. WDMA - Window & Door Manufacturers Association; www.wdma.com.
203. WI - Woodwork Institute; www.wicnet.org.
204. WSRCA - Western States Roofing Contractors Association; www.wsrca.com.
205. WWPA - Western Wood Products Association; www.wwpa.org.

NOT FOR BIDDING

C. Code Agencies: Where abbreviations and acronyms are used in Specifications or other Contract Documents, they shall mean the recognized name of the entities in the following list. This information is believed to be accurate as of the date of the Contract Documents.

1. DIN - Deutsches Institut fur Normung e.V.; www.din.de.
2. IAPMO - International Association of Plumbing and Mechanical Officials; www.iapmo.org.
3. ICC - International Code Council; www.iccsafe.org.
4. ICC-ES - ICC Evaluation Service, LLC; www.icc-es.org.

D. Federal Government Agencies: Where abbreviations and acronyms are used in Specifications or other Contract Documents, they shall mean the recognized name of the entities in the following list. Information is subject to change and is up to date as of the date of the Contract Documents.

1. COE - Army Corps of Engineers; www.usace.army.mil.
2. CPSC - Consumer Product Safety Commission; www.cpsc.gov.
3. DOC - Department of Commerce; National Institute of Standards and Technology; www.nist.gov.
4. DOD - Department of Defense; www.quicksearch.dla.mil.
5. DOE - Department of Energy; www.energy.gov.
6. EPA - Environmental Protection Agency; www.epa.gov.
7. FAA - Federal Aviation Administration; www.faa.gov.
8. FG - Federal Government Publications; www.gpo.gov.
9. GSA - General Services Administration; www.gsa.gov.
10. HUD - Department of Housing and Urban Development; www.hud.gov.
11. LBL - Lawrence Berkeley National Laboratory; Environmental Energy Technologies Division; www.eetd.lbl.gov.
12. OSHA - Occupational Safety & Health Administration; www.osha.gov.
13. SD - Department of State; www.state.gov.
14. TRB - Transportation Research Board; National Cooperative Highway Research Program; The National Academies; www.trb.org.
15. USDA - Department of Agriculture; Agriculture Research Service; U.S. Salinity Laboratory; www.ars.usda.gov.
16. USDA - Department of Agriculture; Rural Utilities Service; www.usda.gov.
17. USDJ - Department of Justice; Office of Justice Programs; National Institute of Justice; www.ojp.usdoj.gov.
18. USP - U.S. Pharmacopeial Convention; www.usp.org.
19. USPS - United States Postal Service; www.usps.com.

E. Standards and Regulations: Where abbreviations and acronyms are used in Specifications or other Contract Documents, they shall mean the recognized name of the standards and regulations in the following list. This information is subject to change and is believed to be accurate as of the date of the Contract Documents.

1. CFR - Code of Federal Regulations; Available from Government Printing Office; www.gpo.gov/fdsys.
2. DOD - Department of Defense; Military Specifications and Standards; Available from DLA Document Services; www.quicksearch.dla.mil.
3. DSCC - Defense Supply Center Columbus; (See FS).
4. FED-STD - Federal Standard; (See FS).

NOT FOR BIDDING

5. FS - Federal Specification; Available from DLA Document Services; www.quicksearch.dla.mil.

    a. Available from Defense Standardization Program; www.dsp.dla.mil.
    b. Available from General Services Administration; www.gsa.gov.
    c. Available from National Institute of Building Sciences; Whole Building Design Guide; www.wbdg.org/ccb.

6. MILSPEC - Military Specification and Standards; (See DOD).
7. USAB - United States Access Board; www.access-board.gov.
8. USATBCB - U.S. Architectural & Transportation Barriers Compliance Board; (See USAB).

F. State Government Agencies: Where abbreviations and acronyms are used in Specifications or other Contract Documents, they shall mean the recognized name of the entities in the following list. This information is subject to change and is believed to be accurate as of the date of the Contract Documents.

1. CBHF; State of California; Department of Consumer Affairs; Bureau of Electronic and Appliance Repair, Home Furnishings and Thermal Insulation; www.bearhfti.ca.gov.
2. CCR; California Code of Regulations; Office of Administrative Law; California Title 24 Energy Code; www.calregs.com.
3. CDHS; California Department of Health Services; (See CDPH).
4. CDPH; California Department of Public Health; Indoor Air Quality Program; www.cal-iaq.org.
5. CPUC; California Public Utilities Commission; www.cpuc.ca.gov.
6. SCAQMD; South Coast Air Quality Management District; www.aqmd.gov.
7. TFS; Texas A&M Forest Service; Sustainable Forestry and Economic Development; www.txforestservice.tamu.edu.

PART 2 - PRODUCTS (Not Used)

PART 3 - EXECUTION (Not Used)

END OF SECTION 014200

NOT FOR BIDDING

SECTION 015000 - TEMPORARY FACILITIES AND CONTROLS

PART 1 - GENERAL

1.1 RELATED DOCUMENTS

A. Drawings and general provisions of the Contract, including General and Supplementary Conditions and other Division 01 Specification Sections, apply to this Section.

1.2 SUMMARY

A. Section includes requirements for temporary utilities, support facilities, and security and protection facilities.

B. Related Requirements:

1. Section 011000 "Summary" for work restrictions and limitations on utility interruptions.
2. Section 312319 "Dewatering" for disposal of ground water at Project site.
3. Section 321216 "Asphalt Paving" for construction and maintenance of asphalt pavement for temporary roads and paved areas.
4. Section 321313 "Concrete Paving" for construction and maintenance of cement concrete pavement for temporary roads and paved areas.

1.3 USE CHARGES

A. General: Installation and removal of and use charges for temporary facilities shall be included in the Contract Sum unless otherwise indicated. Allow other entities to use temporary services and facilities without cost, including, but not limited to, Owner's construction forces, Architect,] testing agencies, and authorities having jurisdiction.

B. Water and Sewer Service from Existing System: Water from Owner's existing water system is available for use without metering and without payment of use charges. Provide connections and extensions of services as required for construction operations.

C. Electric Power Service from Existing System: Electric power from Owner's existing system is available for use without metering and without payment of use charges. Provide connections and extensions of services as required for construction operations.

1.4 INFORMATIONAL SUBMITTALS

A. Site Plan: Show temporary facilities, utility hookups, staging areas, and parking areas for construction personnel.

B. Erosion- and Sedimentation-Control Plan: Show compliance with requirements of EPA Construction General Permit or authorities having jurisdiction, whichever is more stringent.

NOT FOR BIDDING

C. Moisture-Protection Plan: Describe procedures and controls for protecting materials and construction from water absorption and damage.

1. Describe delivery, handling, and storage provisions for materials subject to water absorption or water damage.
2. Indicate procedures for discarding water-damaged materials, protocols for mitigating water intrusion into completed Work, and replacing water-damaged Work.
3. Indicate sequencing of work that requires water, such as sprayed fire-resistive materials, plastering, and terrazzo grinding, and describe plans for dealing with water from these operations. Show procedures for verifying that wet construction has dried sufficiently to permit installation of finish materials.

D. Dust- and HVAC-Control Plan: Submit coordination drawing and narrative that indicates the dust- and HVAC-control measures proposed for use, proposed locations, and proposed time frame for their operation. Identify further options if proposed measures are later determined to be inadequate. Include the following:

1. Locations of dust-control partitions at each phase of work.
2. HVAC system isolation schematic drawing.
3. Location of proposed air-filtration system discharge.
4. Waste handling procedures.
5. Other dust-control measures.

1.5 QUALITY ASSURANCE

A. Electric Service: Comply with NECA, NEMA, and UL standards and regulations for temporary electric service. Install service to comply with NFPA 70.

B. Tests and Inspections: Arrange for authorities having jurisdiction to test and inspect each temporary utility before use. Obtain required certifications and permits.

C. Accessible Temporary Egress: Comply with applicable provisions in the U.S. Architectural & Transportation Barriers Compliance Board's ADA-ABA Accessibility Guidelines, ICC/ANSI A117.1 and the State of Delaware Architectural Accessibility Standard.

1.6 PROJECT CONDITIONS

A. Temporary Use of Permanent Facilities: Engage Installer of each permanent service to assume responsibility for operation, maintenance, and protection of each permanent service during its use as a construction facility before Owner's acceptance, regardless of previously assigned responsibilities.

PART 2 - PRODUCTS

2.1 MATERIALS

A. Chain-Link Fencing: Minimum 2-inch (50-mm), 0.148-inch- (3.8-mm-) thick, galvanized-steel, chain-link fabric fencing; minimum 6 feet (1.8 m) high with galvanized-steel pipe posts;

NOT FOR BIDDING

minimum 2-3/8-inch- (60-mm-) OD line posts and 2-7/8-inch- (73-mm-) OD corner and pull posts.

B. Portable Chain-Link Fencing: Minimum 2-inch (50-mm), 0.148-inch- (3.8-mm-) thick, galvanized-steel, chain-link fabric fencing; minimum 6 feet (1.8 m) high with galvanized-steel pipe posts; minimum 2-3/8-inch- (60-mm-) OD line posts and 2-7/8-inch- (73-mm-) OD corner and pull posts, with 1-5/8-inch- (42-mm-) OD top and bottom rails. Provide concrete or galvanized-steel bases for supporting posts.

C. Insulation: Unfaced mineral-fiber blanket, manufactured from glass, slag wool, or rock wool; with maximum flame-spread and smoke-developed indexes of 25 and 50, respectively.

2.2 TEMPORARY FACILITIES

A. Field Offices, General: Prefabricated or mobile units with serviceable finishes, temperature controls, and foundations adequate for normal loading.

B. Common-Use Field Office: Of sufficient size to accommodate needs of Owner, Architect, and construction personnel office activities and to accommodate Project meetings specified in other Division 01 Sections. Keep office clean and orderly. Furnish and equip offices as follows:

1. Furniture required for Project-site documents, including file cabinets, plan tables, plan racks, and bookcases.
2. Conference room of sufficient size to accommodate meetings of 10 individuals. Provide electrical power service and 120-V ac duplex receptacles, with no fewer than one receptacle on each wall. Furnish room with conference table, chairs, and 4-foot- (1.2-m-) square tack and marker boards.
3. Drinking water and private toilet.
4. Coffee machine and supplies.
5. Heating and cooling equipment necessary to maintain a uniform indoor temperature of 68 to 72 deg F (20 to 22 deg C).
6. Lighting fixtures capable of maintaining average illumination of 20 fc (215 lx) at desk height.

C. Storage and Fabrication Sheds: Provide sheds sized, furnished, and equipped to accommodate materials and equipment for construction operations.

1. Store combustible materials apart from building.

2.3 EQUIPMENT

A. Fire Extinguishers: Portable, UL rated; with class and extinguishing agent as required by locations and classes of fire exposures.

B. HVAC Equipment: Unless Owner authorizes use of permanent HVAC system, provide vented, self-contained, liquid-propane-gas or fuel-oil heaters with individual space thermostatic control.

1. Use of gasoline-burning space heaters, open-flame heaters, or salamander-type heating units is prohibited.

NOT FOR BIDDING

2. Heating Units: Listed and labeled for type of fuel being consumed, by a qualified testing agency acceptable to authorities having jurisdiction, and marked for intended location and application.

PART 3 - EXECUTION

3.1 INSTALLATION, GENERAL

A. Locate facilities where they will serve Project adequately and result in minimum interference with performance of the Work. Relocate and modify facilities as required by progress of the Work.

1. Locate facilities to limit site disturbance as specified in Section 011000 "Summary."

B. Provide each facility ready for use when needed to avoid delay. Do not remove until facilities are no longer needed or are replaced by authorized use of completed permanent facilities.

3.2 TEMPORARY UTILITY INSTALLATION

A. General: Install temporary service or connect to existing service.

1. Arrange with utility company, Owner, and existing users for time when service can be interrupted, if necessary, to make connections for temporary services.

B. Water Service: Connect to Owner's existing water service facilities. Clean and maintain water service facilities in a condition acceptable to Owner. At Substantial Completion, restore these facilities to condition existing before initial use.

C. Sanitary Facilities: Provide temporary toilets, wash facilities, and drinking water for use of construction personnel. Comply with requirements of authorities having jurisdiction for type, number, location, operation, and maintenance of fixtures and facilities.

1. Toilets: Use of Owner's existing toilet facilities will be permitted, as long as facilities are cleaned and maintained in a condition acceptable to Owner. At Substantial Completion, restore these facilities to condition existing before initial use. The only toilet facility to be use will be the uni-sex toilet room in the existing concession building.

D. Heating: Provide temporary heating required by construction activities for curing or drying of completed installations or for protecting installed construction from adverse effects of low temperatures or high humidity. Select equipment that will not have a harmful effect on completed installations or elements being installed.

E. Isolation of Work Areas in Occupied Facilities: Prevent dust, fumes, and odors from entering occupied areas.

F. Ventilation and Humidity Control: Provide temporary ventilation required by construction activities for curing or drying of completed installations or for protecting installed construction from adverse effects of high humidity. Select equipment that will not have a harmful effect on

NOT FOR BIDDING

completed installations or elements being installed. Coordinate ventilation requirements to produce ambient condition required and minimize energy consumption.

1. Provide dehumidification systems when required to reduce substrate moisture levels to level required to allow installation or application of finishes.

G. Electric Power Service: Connect to Owner's existing electric power service. Maintain equipment in a condition acceptable to Owner.

H. Lighting: Provide temporary lighting with local switching that provides adequate illumination for construction operations, observations, inspections, and traffic conditions.

1. Install and operate temporary lighting that fulfills security and protection requirements without operating entire system.
2. Install lighting for Project identification sign.

I. Telephone Service: Provide temporary telephone service in common-use facilities for use by all construction personnel. Install one telephone line(s) for each field office.

1. At each telephone, post a list of important telephone numbers.

a. Police and fire departments.
b. Ambulance service.
c. Contractor's home office.
d. Contractor's emergency after-hours telephone number.
e. Architect's office.
f. Engineers' offices.
g. Owner's office.
h. Principal subcontractors' field and home offices.

2. Provide superintendent with cellular telephone or portable two-way radio for use when away from field office.

3.3 SUPPORT FACILITIES INSTALLATION

A. General: Comply with the following:

1. Provide construction for temporary offices, shops, and sheds located within construction area or within 30 feet (9 m) of building lines that is noncombustible according to ASTM E 136. Comply with NFPA 241.
2. Maintain support facilities until Architect schedules Substantial Completion inspection. Remove before Substantial Completion. Personnel remaining after Substantial Completion will be permitted to use permanent facilities, under conditions acceptable to Owner.

B. Temporary Roads and Paved Areas: Construct and maintain temporary roads and paved areas adequate for construction operations. Locate temporary roads and paved areas as indicated on Drawings.

NOT FOR BIDDING

1. Provide dust-control treatment that is nonpolluting and nontracking. Reapply treatment as required to minimize dust.

C. Temporary Use of Permanent Roads and Paved Areas: Locate temporary roads and paved areas in same location as permanent roads and paved areas. Construct and maintain temporary roads and paved areas adequate for construction operations. Extend temporary roads and paved areas, within construction limits indicated, as necessary for construction operations.

1. Coordinate elevations of temporary roads and paved areas with permanent roads and paved areas.
2. Prepare subgrade and install subbase and base for temporary roads and paved areas according to Section 312000 "Earth Moving."
3. Recondition base after temporary use, including removing contaminated material, regrading, proofrolling, compacting, and testing.
4. Delay installation of final course of permanent hot-mix asphalt pavement until immediately before Substantial Completion. Repair hot-mix asphalt base-course pavement before installation of final course according to Section 321216 "Asphalt Paving."

D. Traffic Controls: Comply with requirements of authorities having jurisdiction.

1. Protect existing site improvements to remain including curbs, pavement, and utilities.
2. Maintain access for fire-fighting equipment and access to fire hydrants.

E. Parking: Use designated areas of Owner's existing parking areas for construction personnel.

F. Dewatering Facilities and Drains: Comply with requirements of authorities having jurisdiction. Maintain Project site, excavations, and construction free of water.

1. Dispose of rainwater in a lawful manner that will not result in flooding Project or adjoining properties or endanger permanent Work or temporary facilities.
2. Remove snow and ice as required to minimize accumulations.

G. Project Signs: Provide Project signs as indicated. Unauthorized signs are not permitted.

1. Temporary Signs: Provide other signs as indicated and as required to inform public and individuals seeking entrance to Project.

   a. Provide temporary, directional signs for construction personnel and visitors.

2. Maintain and touchup signs so they are legible at all times.

H. Waste Disposal Facilities: Comply with requirements specified in Section 017419 "Construction Waste Management and Disposal."

I. Lifts and Hoists: Provide facilities necessary for hoisting materials and personnel.

1. Truck cranes and similar devices used for hoisting materials are considered "tools and equipment" and not temporary facilities.

NOT FOR BIDDING

3.4 SECURITY AND PROTECTION FACILITIES INSTALLATION

A. Protection of Existing Facilities: Protect existing vegetation, equipment, structures, utilities, and other improvements at Project site and on adjacent properties, except those indicated to be removed or altered. Repair damage to existing facilities.

B. Environmental Protection: Provide protection, operate temporary facilities, and conduct construction as required to comply with environmental regulations and that minimize possible air, waterway, and subsoil contamination or pollution or other undesirable effects.

1. Comply with work restrictions specified in Section 01100 "Summary."

C. Temporary Erosion and Sedimentation Control: Provide measures to prevent soil erosion and discharge of soil-bearing water runoff and airborne dust to undisturbed areas and to adjacent properties and walkways, according to erosion- and sedimentation-control Drawings and requirements of 2003 EPA Construction General Permit or authorities having jurisdiction, whichever is more stringent.

1. Verify that flows of water redirected from construction areas or generated by construction activity do not enter or cross tree- or plant- protection zones.
2. Inspect, repair, and maintain erosion- and sedimentation-control measures during construction until permanent vegetation has been established.
3. Clean, repair, and restore adjoining properties and roads affected by erosion and sedimentation from Project site during the course of Project.
4. Remove erosion and sedimentation controls and restore and stabilize areas disturbed during removal.

D. Stormwater Control: Comply with requirements of authorities having jurisdiction. Provide barriers in and around excavations and subgrade construction to prevent flooding by runoff of stormwater from heavy rains.

E. Tree and Plant Protection: Install temporary fencing located as indicated or outside the drip line of trees to protect vegetation from damage from construction operations. Protect tree root systems from damage, flooding, and erosion.

F. Pest Control: Engage pest-control service to recommend practices to minimize attraction and harboring of rodents, roaches, and other pests and to perform extermination and control procedures at regular intervals so Project will be free of pests and their residues at Substantial Completion. Perform control operations lawfully, using environmentally safe materials.

G. Site Enclosure Fence: Before construction operations begin, furnish and install site enclosure fence in a manner that will prevent people and animals from easily entering site except by entrance gates.

1. Extent of Fence: As required to enclose entire Project site or portion determined sufficient to accommodate construction operations.
2. Maintain security by limiting number of keys and restricting distribution to authorized personnel.

NOT FOR BIDDING

H. Security Enclosure and Lockup: Install temporary enclosure around partially completed areas of construction. Provide lockable entrances to prevent unauthorized entrance, vandalism, theft, and similar violations of security. Lock entrances at end of each work day.

I. Barricades, Warning Signs, and Lights: Comply with requirements of authorities having jurisdiction for erecting structurally adequate barricades, including warning signs and lighting.

J. Temporary Egress: Maintain temporary egress from existing occupied facilities as indicated and as required by authorities having jurisdiction.

K. Temporary Enclosures: Provide temporary enclosures for protection of construction, in progress and completed, from exposure, foul weather, other construction operations, and similar activities. Provide temporary weathertight enclosure for building exterior.

1. Where heating or cooling is needed and permanent enclosure is incomplete, insulate temporary enclosures.

L. Temporary Fire Protection: Install and maintain temporary fire-protection facilities of types needed to protect against reasonably predictable and controllable fire losses. Comply with NFPA 241; manage fire-prevention program.

1. Prohibit smoking in construction area.
2. Supervise welding operations, combustion-type temporary heating units, and similar sources of fire ignition according to requirements of authorities having jurisdiction.
3. Develop and supervise an overall fire-prevention and -protection program for personnel at Project site. Review needs with local fire department and establish procedures to be followed. Instruct personnel in methods and procedures. Post warnings and information.
4. Provide temporary standpipes and hoses for fire protection. Hang hoses with a warning sign stating that hoses are for fire-protection purposes only and are not to be removed. Match hose size with outlet size and equip with suitable nozzles.

3.5 MOISTURE AND MOLD CONTROL

A. Contractor's Moisture-Protection Plan: Avoid trapping water in finished work. Document visible signs of mold that may appear during construction.

B. Exposed Construction Phase: Before installation of weather barriers, when materials are subject to wetting and exposure and to airborne mold spores, protect as follows:

1. Protect porous materials from water damage.
2. Protect stored and installed material from flowing or standing water.
3. Keep porous and organic materials from coming into prolonged contact with concrete.
4. Remove standing water from decks.
5. Keep drain openings covered or dammed.

3.6 OPERATION, TERMINATION, AND REMOVAL

A. Supervision: Enforce strict discipline in use of temporary facilities. To minimize waste and abuse, limit availability of temporary facilities to essential and intended uses.

NOT FOR BIDDING

B. Maintenance: Maintain facilities in good operating condition until removal.

1. Maintain operation of temporary enclosures, heating, cooling, humidity control, ventilation, and similar facilities on a 24-hour basis where required to achieve indicated results and to avoid possibility of damage.

C. Operate Project-identification-sign lighting daily from dusk until 12:00 midnight.

D. Temporary Facility Changeover: Do not change over from using temporary security and protection facilities to permanent facilities until Substantial Completion.

E. Termination and Removal: Remove each temporary facility when need for its service has ended, when it has been replaced by authorized use of a permanent facility, or no later than Substantial Completion. Complete or, if necessary, restore permanent construction that may have been delayed because of interference with temporary facility. Repair damaged Work, clean exposed surfaces, and replace construction that cannot be satisfactorily repaired.

1. Materials and facilities that constitute temporary facilities are property of Contractor. Owner reserves right to take possession of Project identification signs.
2. Remove temporary roads and paved areas not intended for or acceptable for integration into permanent construction. Where area is intended for landscape development, remove soil and aggregate fill that do not comply with requirements for fill or subsoil. Remove materials contaminated with road oil, asphalt and other petrochemical compounds, and other substances that might impair growth of plant materials or lawns. Repair or replace street paving, curbs, and sidewalks at temporary entrances, as required by authorities having jurisdiction.
3. At Substantial Completion, repair, renovate, and clean permanent facilities used during construction period. Comply with final cleaning requirements specified in Section 017700 "Closeout Procedures."

END OF SECTION 015000

NOT FOR BIDDING

SECTION 016000 - PRODUCT REQUIREMENTS

PART 1 - GENERAL

1.1 RELATED DOCUMENTS

A. Drawings and general provisions of the Contract, including General and Supplementary Conditions and other Division 01 Specification Sections, apply to this Section.

1.2 SUMMARY

A. Section includes administrative and procedural requirements for selection of products for use in Project; product delivery, storage, and handling; manufacturers' standard warranties on products; special warranties; and comparable products.

B. Related Requirements:

1. Section 012300 "Alternates" for products selected under an alternate.
2. Section 012500 "Substitution Procedures" for requests for substitutions.
3. Section 014200 "References" for applicable industry standards for products specified.

1.3 DEFINITIONS

A. Products: Items obtained for incorporating into the Work, whether purchased for Project or taken from previously purchased stock. The term "product" includes the terms "material," "equipment," "system," and terms of similar intent.

1. Named Products: Items identified by manufacturer's product name, including make or model number or other designation shown or listed in manufacturer's published product literature, that is current as of date of the Contract Documents.
2. New Products: Items that have not previously been incorporated into another project or facility. Products salvaged or recycled from other projects are not considered new products.
3. Comparable Product: Product that is demonstrated and approved through submittal process to have the indicated qualities related to type, function, dimension, in-service performance, physical properties, appearance, and other characteristics that equal or exceed those of specified product.

B. Basis-of-Design Product Specification: A specification in which a specific manufacturer's product is named and accompanied by the words "basis-of-design product," including make or model number or other designation, to establish the significant qualities related to type, function, dimension, in-service performance, physical properties, appearance, and other characteristics for purposes of evaluating comparable products of additional manufacturers named in the specification.

NOT FOR BIDDING

1.4 ACTION SUBMITTALS

A. Comparable Product Requests: Submit request for consideration of each comparable product. Identify product or fabrication or installation method to be replaced. Include Specification Section number and title and Drawing numbers and titles.

1. Include data to indicate compliance with the requirements specified in "Comparable Products" Article.
2. Architect's Action: If necessary, Architect will request additional information or documentation for evaluation within one week of receipt of a comparable product request. Architect will notify Contractor of approval or rejection of proposed comparable product request within 15 days of receipt of request, or seven days of receipt of additional information or documentation, whichever is later.

   a. Form of Approval: As specified in Section 013300 "Submittal Procedures."
   b. Use product specified if Architect does not issue a decision on use of a comparable product request within time allocated.

B. Basis-of-Design Product Specification Submittal: Comply with requirements in Section 013300 "Submittal Procedures." Show compliance with requirements.

1.5 QUALITY ASSURANCE

A. Compatibility of Options: If Contractor is given option of selecting between two or more products for use on Project, select product compatible with products previously selected, even if previously selected products were also options.

1. Each contractor is responsible for providing products and construction methods compatible with products and construction methods of other contractors.
2. If a dispute arises between contractors over concurrently selectable but incompatible products, Architect will determine which products shall be used.

1.6 PRODUCT DELIVERY, STORAGE, AND HANDLING

A. Deliver, store, and handle products using means and methods that will prevent damage, deterioration, and loss, including theft and vandalism. Comply with manufacturer's written instructions.

B. Delivery and handling:

1. Schedule delivery to minimize long-term storage at Project site and to prevent overcrowding of construction spaces.
2. Coordinate delivery with installation time to ensure minimum holding time for items that are flammable, hazardous, easily damaged, or sensitive to deterioration, theft, and other losses.
3. Deliver products to Project site in an undamaged condition in manufacturer's original sealed container or other packaging system, complete with labels and instructions for handling, storing, unpacking, protecting, and installing.

NOT FOR BIDDING

4. Inspect products on delivery to determine compliance with the Contract Documents and to determine that products are undamaged and properly protected.

C. Storage:

1. Store products to allow for inspection and measurement of quantity or counting of units.
2. Store materials in a manner that will not endanger Project structure.
3. Store products that are subject to damage by the elements, under cover in a weathertight enclosure above ground, with ventilation adequate to prevent condensation.
4. Protect foam plastic from exposure to sunlight, except to extent necessary for period of installation and concealment.
5. Comply with product manufacturer's written instructions for temperature, humidity, ventilation, and weather-protection requirements for storage.
6. Protect stored products from damage and liquids from freezing.
7. Provide a secure location and enclosure at Project site for storage of materials and equipment by Owner's construction forces. Coordinate location with Owner.

1.7 PRODUCT WARRANTIES

A. Warranties specified in other Sections shall be in addition to, and run concurrent with, other warranties required by the Contract Documents. Manufacturer's disclaimers and limitations on product warranties do not relieve Contractor of obligations under requirements of the Contract Documents.

1. Manufacturer's Warranty: Written warranty furnished by individual manufacturer for a particular product and specifically endorsed by manufacturer to Owner.
2. Special Warranty: Written warranty required by the Contract Documents to provide specific rights for Owner.

B. Special Warranties: Prepare a written document that contains appropriate terms and identification, ready for execution.

1. Manufacturer's Standard Form: Modified to include Project-specific information and properly executed.
2. Specified Form: When specified forms are included with the Specifications, prepare a written document using indicated form properly executed.
3. See other Sections for specific content requirements and particular requirements for submitting special warranties.

C. Submittal Time: Comply with requirements in Section 017700 "Closeout Procedures."

PART 2 - PRODUCTS

2.1 PRODUCT SELECTION PROCEDURES

A. General Product Requirements: Provide products that comply with the Contract Documents, are undamaged and, unless otherwise indicated, are new at time of installation.

NOT FOR BIDDING

1. Provide products complete with accessories, trim, finish, fasteners, and other items needed for a complete installation and indicated use and effect.
2. Standard Products: If available, and unless custom products or nonstandard options are specified, provide standard products of types that have been produced and used successfully in similar situations on other projects.
3. Owner reserves the right to limit selection to products with warranties not in conflict with requirements of the Contract Documents.
4. Where products are accompanied by the term "as selected," Architect will make selection.
5. Descriptive, performance, and reference standard requirements in the Specifications establish salient characteristics of products.
6. Or Equal: For products specified by name and accompanied by the term "or equal," or "or approved equal," or "or approved," comply with requirements in "Comparable Products" Article to obtain approval for use of an unnamed product.

B. Product Selection Procedures:

1. Product: Where Specifications name a single manufacturer and product, provide the named product that complies with requirements. Comparable products or substitutions for Contractor's convenience will not be considered.
2. Manufacturer/Source: Where Specifications name a single manufacturer or source, provide a product by the named manufacturer or source that complies with requirements. Comparable products or substitutions for Contractor's convenience will not be considered.
3. Products:

   a. Restricted List: Where Specifications include a list of names of both manufacturers and products, provide one of the products listed that complies with requirements. Comparable products or substitutions for Contractor's convenience will not be considered unless otherwise indicated.
   b. Nonrestricted List: Where Specifications include a list of names of both available manufacturers and products, provide one of the products listed, or an unnamed product, that complies with requirements. Comply with requirements in "Comparable Products" Article for consideration of an unnamed product.

4. Manufacturers:

   a. Restricted List: Where Specifications include a list of manufacturers' names, provide a product by one of the manufacturers listed that complies with requirements. Comparable products or substitutions for Contractor's convenience will not be considered unless otherwise indicated.
   b. Nonrestricted List: Where Specifications include a list of available manufacturers, provide a product by one of the manufacturers listed, or a product by an unnamed manufacturer, that complies with requirements. Comply with requirements in "Comparable Products" Article for consideration of an unnamed manufacturer's product.

5. Basis-of-Design Product: Where Specifications name a product, or refer to a product indicated on Drawings, and include a list of manufacturers, provide the specified or indicated product or a comparable product by one of the other named manufacturers. Drawings and Specifications indicate sizes, profiles, dimensions, and other characteristics

NOT FOR BIDDING

that are based on the product named. Comply with requirements in "Comparable Products" Article for consideration of an unnamed product by one of the other named manufacturers.

C. Visual Matching Specification: Where Specifications require "match Architect's sample", provide a product that complies with requirements and matches Architect's sample. Architect's decision will be final on whether a proposed product matches.

1. If no product available within specified category matches and complies with other specified requirements, comply with requirements in Section 012500 "Substitution Procedures" for proposal of product.

D. Visual Selection Specification: Where Specifications include the phrase "as selected by Architect from manufacturer's full range" or similar phrase, select a product that complies with requirements. Architect will select color, gloss, pattern, density, or texture from manufacturer's product line that includes both standard and premium items.

2.2 COMPARABLE PRODUCTS

A. Conditions for Consideration: Architect will consider Contractor's request for comparable product when the following conditions are satisfied. If the following conditions are not satisfied, Architect may return requests without action except to record noncompliance with these requirements:

1. Evidence that the proposed product does not require revisions to the Contract Documents, that it is consistent with the Contract Documents and will produce the indicated results, and that it is compatible with other portions of the Work.
2. Detailed comparison of significant qualities of proposed product with those named in the Specifications. Significant qualities include attributes such as performance, weight, size, durability, visual effect and specific features and requirements indicated.
3. Evidence that proposed product provides specified warranty.
4. List of similar installations for completed projects with project names and addresses and names and addresses of architects and owners, if requested.
5. Samples, if requested.

PART 3 - EXECUTION (Not Used)

END OF SECTION 016000

NOT FOR BIDDING

(PAGE LEFT BLANK)

NOT FOR BIDDING

SECTION 017300 - EXECUTION

PART 1 - GENERAL

1.1 RELATED DOCUMENTS

A. Drawings and general provisions of the Contract, including General and Supplementary Conditions and other Division 01 Specification Sections, apply to this Section.

1.2 SUMMARY

A. Section includes general administrative and procedural requirements governing execution of the Work including, but not limited to, the following:

1. Construction layout.
2. Field engineering and surveying.
3. Installation of the Work.
4. Cutting and patching.
5. Coordination of Owner-installed products.
6. Progress cleaning.
7. Starting and adjusting.
8. Protection of installed construction.

B. Related Requirements:

1. Section 011000 "Summary" for limits on use of Project site.
2. Section 013300 "Submittal Procedures" for submitting surveys.
3. Section 017700 "Closeout Procedures" for submitting final property survey with Project Record Documents, recording of Owner-accepted deviations from indicated lines and levels, and final cleaning.

1.3 DEFINITIONS

A. Cutting: Removal of in-place construction necessary to permit installation or performance of other work.

B. Patching: Fitting and repair work required to restore construction to original conditions after installation of other work.

1.4 INFORMATIONAL SUBMITTALS

A. Qualification Data: For land surveyor.

B. Certificates: Submit certificate signed by land surveyor certifying that location and elevation of improvements comply with requirements.

NOT FOR BIDDING

C. Cutting and Patching Plan: Submit plan describing procedures at least 10 days prior to the time cutting and patching will be performed. Include the following information:

1. Extent: Describe reason for and extent of each occurrence of cutting and patching.
2. Changes to In-Place Construction: Describe anticipated results. Include changes to structural elements and operating components as well as changes in building appearance and other significant visual elements.
3. Products: List products to be used for patching and firms or entities that will perform patching work.
4. Dates: Indicate when cutting and patching will be performed.
5. Utilities and Mechanical and Electrical Systems: List services and systems that cutting and patching procedures will disturb or affect. List services and systems that will be relocated and those that will be temporarily out of service. Indicate length of time permanent services and systems will be disrupted.

   a. Include description of provisions for temporary services and systems during interruption of permanent services and systems.

D. Landfill Receipts: Submit copy of receipts issued by a landfill facility, licensed to accept hazardous materials, for hazardous waste disposal.

E. Certified Surveys: Submit two copies signed by land surveyor.

1.5 QUALITY ASSURANCE

A. Land Surveyor Qualifications: A professional land surveyor who is legally qualified to practice in jurisdiction where Project is located and who is experienced in providing land-surveying services of the kind indicated.

B. Cutting and Patching: Comply with requirements for and limitations on cutting and patching of construction elements.

1. Structural Elements: When cutting and patching structural elements, notify Architect of locations and details of cutting and await directions from Architect before proceeding. Shore, brace, and support structural elements during cutting and patching. Do not cut and patch structural elements in a manner that could change their load-carrying capacity or increase deflection

2. Operational Elements: Do not cut and patch operating elements and related components in a manner that results in reducing their capacity to perform as intended or that results in increased maintenance or decreased operational life or safety.

3. Other Construction Elements: Do not cut and patch other construction elements or components in a manner that could change their load-carrying capacity, that results in reducing their capacity to perform as intended, or that results in increased maintenance or decreased operational life or safety.

4. Visual Elements: Do not cut and patch construction in a manner that results in visual evidence of cutting and patching. Do not cut and patch exposed construction in a manner

NOT FOR BIDDING

that would, in Architect's opinion, reduce the building's aesthetic qualities. Remove and replace construction that has been cut and patched in a visually unsatisfactory manner.

C. Cutting and Patching Conference: Before proceeding, meet at Project site with parties involved in cutting and patching, including mechanical and electrical trades. Review areas of potential interference and conflict. Coordinate procedures and resolve potential conflicts before proceeding.

D. Manufacturer's Installation Instructions: Obtain and maintain on site manufacturer's written recommendations and instructions for installation of products and equipment.

PART 2 - PRODUCTS

2.1 MATERIALS

A. General: Comply with requirements specified in other Sections.

1. For projects requiring compliance with sustainable design and construction practices and procedures, use products for patching that comply with sustainable design requirements.

B. In-Place Materials: Use materials for patching identical to in-place materials. For exposed surfaces, use materials that visually match in-place adjacent surfaces to the fullest extent possible.

1. If identical materials are unavailable or cannot be used, use materials that, when installed, will provide a match acceptable to Architect for the visual and functional performance of in-place materials.

PART 3 - EXECUTION

3.1 EXAMINATION

A. Existing Conditions: The existence and location of underground and other utilities and construction indicated as existing are not guaranteed. Before beginning sitework, investigate and verify the existence and location of underground utilities, mechanical and electrical systems, and other construction affecting the Work.

1. Before construction, verify the location and invert elevation at points of connection of sanitary sewer, storm sewer, and water-service piping; underground electrical services, and other utilities.
2. Furnish location data for work related to Project that must be performed by public utilities serving Project site.

B. Examination and Acceptance of Conditions: Before proceeding with each component of the Work, examine substrates, areas, and conditions, with Installer or Applicator present where indicated, for compliance with requirements for installation tolerances and other conditions affecting performance. Record observations.

NOT FOR BIDDING

1. Examine roughing-in for mechanical and electrical systems to verify actual locations of connections before equipment and fixture installation.
2. Examine walls, floors, and roofs for suitable conditions where products and systems are to be installed.
3. Verify compatibility with and suitability of substrates, including compatibility with existing finishes or primers.

C. Written Report: Where a written report listing conditions detrimental to performance of the Work is required by other Sections, include the following:

1. Description of the Work.
2. List of detrimental conditions, including substrates.
3. List of unacceptable installation tolerances.
4. Recommended corrections.

D. Proceed with installation only after unsatisfactory conditions have been corrected. Proceeding with the Work indicates acceptance of surfaces and conditions.

3.2 PREPARATION

A. Existing Utility Information: Furnish information to Owner that is necessary to adjust, move, or relocate existing utility structures, utility poles, lines, services, or other utility appurtenances located in or affected by construction. Coordinate with authorities having jurisdiction.

B. Field Measurements: Take field measurements as required to fit the Work properly. Recheck measurements before installing each product. Where portions of the Work are indicated to fit to other construction, verify dimensions of other construction by field measurements before fabrication. Coordinate fabrication schedule with construction progress to avoid delaying the Work.

C. Space Requirements: Verify space requirements and dimensions of items shown diagrammatically on Drawings.

D. Review of Contract Documents and Field Conditions: Immediately on discovery of the need for clarification of the Contract Documents caused by differing field conditions outside the control of Contractor, submit a request for information to Architect according to requirements in Section 013100 "Project Management and Coordination."

3.3 CONSTRUCTION LAYOUT

A. Verification: Before proceeding to lay out the Work, verify layout information shown on Drawings in relation to the property survey and existing benchmarks. If discrepancies are discovered, notify Architect promptly.

B. General: Engage a land surveyor to lay out the Work using accepted surveying practices.

1. Establish benchmarks and control points to set lines and levels at each story of construction and elsewhere as needed to locate each element of Project.
2. Establish limits on use of Project site.

NOT FOR BIDDING

3. Establish dimensions within tolerances indicated. Do not scale Drawings to obtain required dimensions.
4. Inform installers of lines and levels to which they must comply.
5. Check the location, level and plumb, of every major element as the Work progresses.
6. Notify Architect when deviations from required lines and levels exceed allowable tolerances.
7. Close site surveys with an error of closure equal to or less than the standard established by authorities having jurisdiction.

C. Site Improvements: Locate and lay out site improvements, including pavements, grading, fill and topsoil placement, utility slopes, and rim and invert elevations.

D. Building Lines and Levels: Locate and lay out control lines and levels for structures, building foundations, column grids, and floor levels, including those required for mechanical and electrical work. Transfer survey markings and elevations for use with control lines and levels. Level foundations and piers from two or more locations.

E. Record Log: Maintain a log of layout control work. Record deviations from required lines and levels. Include beginning and ending dates and times of surveys, weather conditions, name and duty of each survey party member, and types of instruments and tapes used. Make the log available for reference by Architect.

3.4 FIELD ENGINEERING

A. Identification: Owner will identify existing benchmarks, control points, and property corners.

B. Reference Points: Locate existing permanent benchmarks, control points, and similar reference points before beginning the Work. Preserve and protect permanent benchmarks and control points during construction operations.

1. Do not change or relocate existing benchmarks or control points without prior written approval of Architect. Report lost or destroyed permanent benchmarks or control points promptly. Report the need to relocate permanent benchmarks or control points to Architect before proceeding.
2. Replace lost or destroyed permanent benchmarks and control points promptly. Base replacements on the original survey control points.

C. Benchmarks: Establish and maintain a minimum of two permanent benchmarks on Project site, referenced to data established by survey control points. Comply with authorities having jurisdiction for type and size of benchmark.

1. Record benchmark locations, with horizontal and vertical data, on Project Record Documents.
2. Where the actual location or elevation of layout points cannot be marked, provide temporary reference points sufficient to locate the Work.
3. Remove temporary reference points when no longer needed. Restore marked construction to its original condition.

NOT FOR BIDDING

D. Certified Survey: On completion of foundation walls, major site improvements, and other work requiring field-engineering services, prepare a certified survey showing dimensions, locations, angles, and elevations of construction and sitework.

E. Final Property Survey: Engage a land surveyor to prepare a final property survey showing significant features (real property) for Project. Include on the survey a certification, signed by land surveyor, that principal metes, bounds, lines, and levels of Project are accurately positioned as shown on the survey.

1. Show boundary lines, monuments, streets, site improvements and utilities, existing improvements and significant vegetation, adjoining properties, acreage, grade contours, and the distance and bearing from a site corner to a legal point.
2. Recording: At Substantial Completion, have the final property survey recorded by or with authorities having jurisdiction as the official "property survey.

3.5 INSTALLATION

A. General: Locate the Work and components of the Work accurately, in correct alignment and elevation, as indicated.

1. Make vertical work plumb and make horizontal work level.
2. Where space is limited, install components to maximize space available for maintenance and ease of removal for replacement.
3. Conceal pipes, ducts, and wiring in finished areas unless otherwise indicated.
4. Maintain minimum headroom clearance of 96 inches (2440 mm) in occupied spaces and 90 inches (2300 mm) in unoccupied spaces.

B. Comply with manufacturer's written instructions and recommendations for installing products in applications indicated.

C. Install products at the time and under conditions that will ensure the best possible results. Maintain conditions required for product performance until Substantial Completion.

D. Conduct construction operations so no part of the Work is subjected to damaging operations or loading in excess of that expected during normal conditions of occupancy.

E. Sequence the Work and allow adequate clearances to accommodate movement of construction items on site and placement in permanent locations.

F. Tools and Equipment: Do not use tools or equipment that produce harmful noise levels.

G. Templates: Obtain and distribute to the parties involved templates for work specified to be factory prepared and field installed. Check Shop Drawings of other work to confirm that adequate provisions are made for locating and installing products to comply with indicated requirements.

H. Attachment: Provide blocking and attachment plates and anchors and fasteners of adequate size and number to securely anchor each component in place, accurately located and aligned with other portions of the Work. Where size and type of attachments are not indicated, verify size and type required for load conditions.

NOT FOR BIDDING

1. Mounting Heights: Where mounting heights are not indicated, mount components at heights directed by Architect.
2. Allow for building movement, including thermal expansion and contraction.
3. Coordinate installation of anchorages. Furnish setting drawings, templates, and directions for installing anchorages, including sleeves, concrete inserts, anchor bolts, and items with integral anchors, that are to be embedded in concrete or masonry. Deliver such items to Project site in time for installation.

I. Joints: Make joints of uniform width. Where joint locations in exposed work are not indicated, arrange joints for the best visual effect. Fit exposed connections together to form hairline joints.

J. Hazardous Materials: Use products, cleaners, and installation materials that are not considered hazardous.

3.6 CUTTING AND PATCHING

A. Cutting and Patching, General: Employ skilled workers to perform cutting and patching. Proceed with cutting and patching at the earliest feasible time, and complete without delay.

1. Cut in-place construction to provide for installation of other components or performance of other construction, and subsequently patch as required to restore surfaces to their original condition.

B. Existing Warranties: Remove, replace, patch, and repair materials and surfaces cut or damaged during installation or cutting and patching operations, by methods and with materials so as not to void existing warranties.

C. Temporary Support: Provide temporary support of work to be cut.

D. Protection: Protect in-place construction during cutting and patching to prevent damage. Provide protection from adverse weather conditions for portions of Project that might be exposed during cutting and patching operations.

E. Adjacent Occupied Areas: Where interference with use of adjoining areas or interruption of free passage to adjoining areas is unavoidable, coordinate cutting and patching according to requirements in Section 011000 "Summary."

F. Existing Utility Services and Mechanical/Electrical Systems: Where existing services/systems are required to be removed, relocated, or abandoned, bypass such services/systems before cutting to minimize interruption to occupied areas.

G. Cutting: Cut in-place construction by sawing, drilling, breaking, chipping, grinding, and similar operations, including excavation, using methods least likely to damage elements retained or adjoining construction. If possible, review proposed procedures with original Installer; comply with original Installer's written recommendations.

1. In general, use hand or small power tools designed for sawing and grinding, not hammering and chopping. Cut holes and slots neatly to minimum size required, and with minimum disturbance of adjacent surfaces. Temporarily cover openings when not in use.
2. Finished Surfaces: Cut or drill from the exposed or finished side into concealed surfaces.

NOT FOR BIDDING

3. Concrete and Masonry: Cut using a cutting machine, such as an abrasive saw or a diamond-core drill.
4. Excavating and Backfilling: Comply with requirements in applicable Sections where required by cutting and patching operations.
5. Mechanical and Electrical Services: Cut off pipe or conduit in walls or partitions to be removed. Cap, valve, or plug and seal remaining portion of pipe or conduit to prevent entrance of moisture or other foreign matter after cutting.
6. Proceed with patching after construction operations requiring cutting are complete.

H. Patching: Patch construction by filling, repairing, refinishing, closing up, and similar operations following performance of other work. Patch with durable seams that are as invisible as practicable. Provide materials and comply with installation requirements specified in other Sections, where applicable.

1. Inspection: Where feasible, test and inspect patched areas after completion to demonstrate physical integrity of installation.
2. Exposed Finishes: Restore exposed finishes of patched areas and extend finish restoration into retained adjoining construction in a manner that will minimize evidence of patching and refinishing.

   a. Clean piping, conduit, and similar features before applying paint or other finishing materials.
   b. Restore damaged pipe covering to its original condition.

3. Floors and Walls: Where walls or partitions that are removed extend one finished area into another, patch and repair floor and wall surfaces in the new space. Provide an even surface of uniform finish, color, texture, and appearance. Remove in-place floor and wall coverings and replace with new materials, if necessary, to achieve uniform color and appearance.

   a. Where patching occurs in a painted surface, prepare substrate and apply primer and intermediate paint coats appropriate for substrate over the patch, and apply final paint coat over entire unbroken surface containing the patch. Provide additional coats until patch blends with adjacent surfaces.

4. Ceilings: Patch, repair, or rehang in-place ceilings as necessary to provide an even-plane surface of uniform appearance.
5. Exterior Building Enclosure: Patch components in a manner that restores enclosure to a weathertight condition and ensures thermal and moisture integrity of building enclosure.

I. Cleaning: Clean areas and spaces where cutting and patching are performed. Remove paint, mortar, oils, putty, and similar materials from adjacent finished surfaces.

3.7 OWNER-INSTALLED PRODUCTS

A. Site Access: Provide access to Project site for Owner's construction personnel.

B. Coordination: Coordinate construction and operations of the Work with work performed by Owner's construction personnel.

NOT FOR BIDDING

1. Construction Schedule: Inform Owner of Contractor's preferred construction schedule for Owner's portion of the Work. Adjust construction schedule based on a mutually agreeable timetable. Notify Owner if changes to schedule are required due to differences in actual construction progress.
2. Preinstallation Conferences: Include Owner's construction personnel at preinstallation conferences covering portions of the Work that are to receive Owner's work. Attend preinstallation conferences conducted by Owner's construction personnel if portions of the Work depend on Owner's construction.

3.8 PROGRESS CLEANING

A. General: Clean Project site and work areas daily, including common areas. Enforce requirements strictly. Dispose of materials lawfully.

1. Comply with requirements in NFPA 241 for removal of combustible waste materials and debris.
2. Do not hold waste materials more than seven days during normal weather or three days if the temperature is expected to rise above 80 deg F (27 deg C).
3. Containerize hazardous and unsanitary waste materials separately from other waste. Mark containers appropriately and dispose of legally, according to regulations.

   a. Use containers intended for holding waste materials of type to be stored.

4. Coordinate progress cleaning for joint-use areas where Contractor and other contractors are working concurrently.

B. Site: Maintain Project site free of waste materials and debris.

C. Work Areas: Clean areas where work is in progress to the level of cleanliness necessary for proper execution of the Work.

1. Remove liquid spills promptly.
2. Where dust would impair proper execution of the Work, broom-clean or vacuum the entire work area, as appropriate.

D. Installed Work: Keep installed work clean. Clean installed surfaces according to written instructions of manufacturer or fabricator of product installed, using only cleaning materials specifically recommended. If specific cleaning materials are not recommended, use cleaning materials that are not hazardous to health or property and that will not damage exposed surfaces.

E. Concealed Spaces: Remove debris from concealed spaces before enclosing the space.

F. Exposed Surfaces in Finished Areas: Clean exposed surfaces and protect as necessary to ensure freedom from damage and deterioration at time of Substantial Completion.

G. Waste Disposal: Do not bury or burn waste materials on-site. Do not wash waste materials down sewers or into waterways. Comply with waste disposal requirements in Section 017419 "Construction Waste Management and Disposal."

NOT FOR BIDDING

H. During handling and installation, clean and protect construction in progress and adjoining materials already in place. Apply protective covering where required to ensure protection from damage or deterioration at Substantial Completion.

I. Clean and provide maintenance on completed construction as frequently as necessary through the remainder of the construction period. Adjust and lubricate operable components to ensure operability without damaging effects.

J. Limiting Exposures: Supervise construction operations to assure that no part of the construction, completed or in progress, is subject to harmful, dangerous, damaging, or otherwise deleterious exposure during the construction period.

3.9 STARTING AND ADJUSTING

A. Coordinate startup and adjusting of equipment and operating components with requirements in Section 019113 "General Commissioning Requirements."

B. Start equipment and operating components to confirm proper operation. Remove malfunctioning units, replace with new units, and retest.

C. Adjust equipment for proper operation. Adjust operating components for proper operation without binding.

D. Test each piece of equipment to verify proper operation. Test and adjust controls and safeties. Replace damaged and malfunctioning controls and equipment.

E. Manufacturer's Field Service: Comply with qualification requirements in Section 014000 "Quality Requirements."

3.10 PROTECTION OF INSTALLED CONSTRUCTION

A. Provide final protection and maintain conditions that ensure installed Work is without damage or deterioration at time of Substantial Completion.

B. Comply with manufacturer's written instructions for temperature and relative humidity.

END OF SECTION 017300

NOT FOR BIDDING

CONSTRUCTION WASTE MANAGEMENT

PART 1 – GENERAL

1.1 SUMMARY

A. Section includes: Administrative and procedural requirements for construction waste management activities.

1.2 DEFINITIONS

A. Construction, Demolition, and Land clearing (CDL) Waste: Includes all non-hazardous solid wastes resulting from construction, remodeling, alterations, repair, demolition and land clearing. Includes material that is recycled, reused, salvaged or disposed as garbage.

B. Salvage: Recovery of materials for on-site reuse, sale or donation to a third party.

C. Reuse: Making use of a material without altering its form. Materials can be reused on-site or reused on other projects off-site. Examples include, but are not limited to the following: Crushing or grinding of concrete for use as sub-base material. Chipping of land clearing debris for use as mulch.

D. Recycling: The process of sorting, cleaning, treating, and reconstituting materials for the purpose of using the material in the manufacture of a new product.

E. Source-Separated CDL Recycling: The process of separating recyclable materials in separate containers as they are generated on the job-site. The separated materials are hauled directly to a recycling facility or transfer station.

F. Co-mingled CDL Recycling: The process of collecting mixed recyclable materials in one container on-site. The container is taken to a material recovery facility where materials are separated for recycling.

G. Approved Recycling Facility: Any of the following:

1. A facility that can legally accept CDL waste materials for the purpose of processing the materials into an altered form for the manufacture of a new product.

2. Material Recovery Facility: A general term used to describe a waste-sorting facility. Mechanical, hand-separation, or a combination of both procedures, are used to recover recyclable materials.

1.3 SUBMITTALS

A. Contractor shall develop a Waste Management Plan: Submit 3 copies of plan within 14 days of date established for the **Notice to Proceed**.

B. Contractor shall provide Waste Management Report: Concurrent with each Application for Payment, submit **3** copies of report.

1.4 PERFORMANCE REQUIREMENTS

A. General: Divert a minimum of **75%** CDL waste, by weight, from the landfill by one, or a combination of the following activities:

NOT FOR BIDDING

1. Salvage
2. Reuse
3. Source-Separated CDL Recycling
4. Co-mingled CDL Recycling

B. CDL waste materials that can be salvaged, reused or recycled include, but are not limited to, the following:

1. Acoustical ceiling tiles
2. Asphalt
3. Asphalt shingles
4. Cardboard packaging
5. Carpet and carpet pad
6. Concrete
7. Drywall
8. Fluorescent lights and ballasts
9. Land clearing debris (vegetation, stumpage, dirt)
10. Metals
11. Paint (through hazardous waste outlets)
12. Wood
13. Plastic film (sheeting, shrink wrap, packaging)
14. Window glass
15. Wood
16. Field office waste, including office paper, aluminum cans, glass, plastic, and office cardboard.

1.4 QUALITY ASSURANCE

A. Waste Management Coordinator Qualifications: Experienced firm, with a record of successful waste management coordination of projects with similar requirements, that employs a LEED Accredited Professional, certified by the USGBC as waste management coordinator.

B. Refrigerant Recovery Technician Qualifications: Certified by EPA-approved certification program.

C. Regulatory Requirements: Conduct construction waste management activities in accordance with hauling and disposal regulations of all authorities having jurisdiction and all other applicable laws and ordinances.

D. Preconstruction Conference: Schedule and conduct meeting at Project site prior to construction activities.

1. Attendees: Inform the following individuals, whose presence is required, of date and time of meeting:

a. Owner
b. Architect
c. Contractor's superintendent
d. Major subcontractors
e. Waste Management Coordinator
f. Other concerned parties

2. Agenda Items: Review methods and procedures related to waste management including, but not limited to, the following:

NOT FOR BIDDING

a. Review and discuss waste management plan including responsibilities of Waste Management Coordinator.
b. Review requirements for documenting quantities of each type of waste and its disposition.
c. Review and finalize procedures for materials separation and verify availability of containers and bins needed to avoid delays.
d. Review procedures for periodic waste collection and transportation to recycling and disposal facilities.
e. Review waste management requirements for each trade.

3. Minutes: Record discussion. Distribute meeting minutes to all participants.

Note: If there is a Project Architect, they will perform this role.

1.5 WASTE MANAGEMENT PLAN – Contactor shall develop and document the following:

A. Develop a plan to meet the requirements listed in this section at a minimum. Plan shall consist of waste identification, waste reduction plan and cost/revenue analysis. Distinguish between demolition and construction waste. Indicate quantities by weight throughout the plan.

B. Indicate anticipated types and quantities of demolition, site-cleaning and construction waste generated by the project. List all assumptions made for the quantities estimates.

C. List each type of waste and whether it will be salvaged, recycled, or disposed of in an landfill. The plan should included the following information:

1. Types and estimated quantities, by weight, of CDL waste expected to be generated during demolition and construction.

2. Proposed methods for CDL waste salvage, reuse, recycling and disposal during demolition including, but not limited to, one or more of the following:

a. Contracting with a deconstruction specialist to salvage materials generated,
b. Selective salvage as part of demolition contractor's work,
c. Reuse of materials on-site or sale or donation to a third party.

3. Proposed methods for salvage, reuse, recycling and disposal during construction including, but not limited to, one or more of the following:

a. Requiring subcontractors to take their CDL waste to a recycling facility;
b. Contracting with a recycling hauler to haul recyclable CDL waste to an approved recycling or material recovery facility;
c. Processing and reusing materials on-site;
d. Self-hauling to a recycling or material recovery facility.

4. Name of recycling or material recovery facility receiving the CDL wastes.

5. Handling and Transportation Procedures: Include method that will be used for separating recyclable waste including sizes of containers, container labeling, and designated location on project site where materials separation will be located.

NOT FOR BIDDING

D. Cost/Revenue Analysis: Indicate total cost of waste disposal as if there was no waste management plan and net additional cost or net savings resulting from implementing waste management plan. Include the following:

1. Total quantity of waste.
2. Estimated cost of disposal (cost per unit). Include hauling and tipping fees and cost of collection containers for each type of waste.
3. Total cost of disposal (with no waste management).
4. Revenue from salvaged materials.
5. Revenue from recycled materials.
6. Savings in hauling and tipping fees by donating materials.
7. Savings in hauling and tipping fees that are avoided.
8. Handling and transportation costs. Including cost of collection containers for each type of waste.
9. Net additional cost or net savings from waste management plan.

PART 2 - PRODUCTS (Not Used)

PART 3 – EXECUTION

3.1 CONSTRUCTION WASTE MANAGEMENT, GENERAL

A. Provide containers for CDL waste that is to be recycled clearly labeled as such with a list of acceptable and unacceptable materials. The list of acceptable materials must be the same as the materials recycled at the receiving material recovery facility or recycling processor.

B. The collection containers for recyclable CDL waste must contain no more than 10% non-recyclable material, by volume.

C. Provide containers for CDL waste that is disposed in a landfill clearly labeled as such.

D. Use detailed material estimates to reduce risk of unplanned and potentially wasteful cuts.

E. To the greatest extent possible, include in material purchasing agreements a waste reduction provision requesting that materials and equipment be delivered in packaging made of recyclable material, that they reduce the amount of packaging, that packaging be taken back for reuse or recycling, and to take back all unused product. Insure that subcontractors require the same provisions in their purchase agreements.

F. Conduct regular visual inspections of dumpsters and recycling bins to remove contaminants.

3.2 SOURCE SEPARATION

A. General: Contractor shall separate recyclable materials from CDL waste to the maximum extent possible.

Separate recyclable materials by type.

1. Provide containers, clearly labeled, by type of separated materials or provide other storage method for managing recyclable materials until they are removed from Project site.
2. Stockpile processed materials on-site without intermixing with other materials. Place, grade, and shape stockpiles to drain surface water and to minimize pest attraction. Cover to prevent windblown dust.\

NOT FOR BIDDING

3. Stockpile materials away from demolition area. Do not store within drip line of remaining trees.
4. Store components off the ground and protect from weather.

3.3 CO-MINGLED RECYCLING

A. General: Do not put CDL waste that will be disposed in a landfill into a co-mingled CDL waste recycling container.

REMOVAL OF CONSTRUCTION WASTE MATERIALS

A. Remove CDL waste materials from project site on a regular basis. Do not allow CDL waste to accumulate on-site.

B. Transport CDL waste materials off Owner's property and legally dispose of them.

C. Burning of CDL waste is not permitted.

END OF SECTION

NOT FOR BIDDING

WASTE MANAGEMENT PROGRESS REPORT		
MATERIAL CATEGORY	**DISPOSED IN MUNICIPAL SOLID WASTE LANDFILL**	**DIVERTED FROM LANDFILL BY RECYCLING, SALVAGE OR REUSE**
Recycled	Salvaged	Reused
1. Acoustical Ceiling Tiles		
2. Asphalt		
3. Asphalt Shingles		
4. Cardboard Packaging		
5. Carpet and Carpet Pad		
6. Concrete		
7. Drywall		
8. Fluorescent Lights and Ballasts		
9. Land Clearing Debris (vegetation, stumpage, dirt)		
10. Metals		
11. Paint (through hazardous waste outlets)		
12. Wood		
13. Plastic Film (sheeting, shrink wrap, packaging)		

NOT FOR BIDDING

14. Window Glass	
15. Field Office Waste (office paper, aluminum cans, glass, plastic, and coffee cardboard)	
16. Other (insert description)	
17. Other (insert description)	
Total (In Weight)	(TOTAL OF ALL ABOVE VALUES - IN WEIGHT)
Percentage of Waste Diverted	(TOTAL WASTE DIVIDED BY TOTAL DIVERTED)

WASTE MANAGEMENT PROGRESS REPORT				
MATERIAL CATEGORY	**DISPOSED IN MUNICIPAL SOLID WASTE LANDFILL**	**DIVERTED FROM LANDFILL BY RECYCLING, SALVAGE OR REUSE**		
		Recycled	Salvaged	Reused

NOT FOR BIDDING

NOT FOR BIDDING

SECTION 017700 - CLOSEOUT PROCEDURES

PART 1 - GENERAL

1.1 RELATED DOCUMENTS

A. Drawings and general provisions of the Contract, including General and Supplementary Conditions and other Division 01 Specification Sections, apply to this Section.

1.2 SUMMARY

A. Section includes administrative and procedural requirements for contract closeout, including, but not limited to, the following:

1. Substantial Completion procedures.
2. Final completion procedures.
3. Warranties.
4. Final cleaning.
5. Repair of the Work.

B. Related Requirements:

1. Section 013233 "Photographic Documentation" for submitting final completion construction photographic documentation.
2. Section 017300 "Execution" for progress cleaning of Project site.
3. Section 017823 "Operation and Maintenance Data" for operation and maintenance manual requirements.
4. Section 017839 "Project Record Documents" for submitting record Drawings, record Specifications, and record Product Data.
5. Section 017900 "Demonstration and Training" for requirements for instructing Owner's personnel.

1.3 ACTION SUBMITTALS

A. Product Data: For cleaning agents.

B. Contractor's List of Incomplete Items: Initial submittal at Substantial Completion.

C. Certified List of Incomplete Items: Final submittal at Final Completion.

1.4 CLOSEOUT SUBMITTALS

A. Certificates of Release: From authorities having jurisdiction.

B. Certificate of Insurance: For continuing coverage.

NOT FOR BIDDING

C. Substantial Completion documents.

D. Consent of Surety to Final Payment

E. Release of Leans, including each contractor, subcontractor, supplier.

F. Field Report: For pest control inspection.

1.5 MAINTENANCE MATERIAL SUBMITTALS

A. Schedule of Maintenance Material Items: For maintenance material submittal items specified in other Sections.

1.6 SUBSTANTIAL COMPLETION PROCEDURES

A. Contractor's List of Incomplete Items: Prepare and submit a list of items to be completed and corrected (Contractor's punch list), indicating the value of each item on the list and reasons why the Work is incomplete.

B. Submittals Prior to Substantial Completion: Complete the following a minimum of 10 days prior to requesting inspection for determining date of Substantial Completion. List items below that are incomplete at time of request.

1. Certificates of Release: Obtain and submit releases from authorities having jurisdiction permitting Owner unrestricted use of the Work and access to services and utilities. Include occupancy permits, operating certificates, and similar releases.
2. Submit closeout submittals specified in other Division 01 Sections, including project record documents, operation and maintenance manuals, final completion construction photographic documentation, damage or settlement surveys, property surveys, and similar final record information.
3. Submit closeout submittals specified in individual Sections, including specific warranties, workmanship bonds, maintenance service agreements, final certifications, and similar documents.
4. Submit maintenance material submittals specified in individual Sections, including tools, spare parts, extra materials, and similar items, and deliver to location designated by Architect. Label with manufacturer's name and model number where applicable.

   a. Schedule of Maintenance Material Items: Prepare and submit schedule of maintenance material submittal items, including name and quantity of each item and name and number of related Specification Section. Obtain Architect's signature for receipt of submittals.

5. Submit test/adjust/balance records.
6. Submit sustainable design submittals not previously submitted.
7. Submit changeover information related to Owner's occupancy, use, operation, and maintenance.

NOT FOR BIDDING

C. Procedures Prior to Substantial Completion: Complete the following a minimum of 10 days prior to requesting inspection for determining date of Substantial Completion. List items below that are incomplete at time of request.

1. Advise Owner of pending insurance changeover requirements.
2. Make final changeover of permanent locks and deliver keys to Owner. Advise Owner's personnel of changeover in security provisions.
3. Complete startup and testing of systems and equipment.
4. Perform preventive maintenance on equipment used prior to Substantial Completion.
5. Instruct Owner's personnel in operation, adjustment, and maintenance of products, equipment, and systems. Submit demonstration and training video recordings specified in Section 017900 "Demonstration and Training."
6. Advise Owner of changeover in heat and other utilities.
7. Participate with Owner in conducting inspection and walkthrough with local emergency responders.
8. Terminate and remove temporary facilities from Project site, along with mockups, construction tools, and similar elements.
9. Complete final cleaning requirements, including touchup painting.
10. Touch up and otherwise repair and restore marred exposed finishes to eliminate visual defects.

D. Inspection: Submit a written request for inspection to determine Substantial Completion a minimum of 10 days prior to date the work will be completed and ready for final inspection and tests. On receipt of request, Architect will either proceed with inspection or notify Contractor of unfulfilled requirements. Architect will prepare the Certificate of Substantial Completion after inspection or will notify Contractor of items, either on Contractor's list or additional items identified by Architect, that must be completed or corrected before certificate will be issued.

1. Reinspection: Request reinspection when the Work identified in previous inspections as incomplete is completed or corrected.
2. Results of completed inspection will form the basis of requirements for final completion.

1.7 FINAL COMPLETION PROCEDURES

A. Submittals Prior to Final Completion: Before requesting final inspection for determining final completion, complete the following:

1. Submit a final Application for Payment according to Section 012900 "Payment Procedures."
2. Certified List of Incomplete Items: Submit certified copy of Architect's Substantial Completion inspection list of items to be completed or corrected (punch list), endorsed and dated by Architect. Certified copy of the list shall state that each item has been completed or otherwise resolved for acceptance.
3. Certificate of Insurance: Submit evidence of final, continuing insurance coverage complying with insurance requirements.
4. Submit pest-control final inspection report.

B. Inspection: Submit a written request for final inspection to determine acceptance a minimum of 10 days prior to date the work will be completed and ready for final inspection and tests. On receipt of request, Architect will either proceed with inspection or notify Contractor of

NOT FOR BIDDING

unfulfilled requirements. Architect will prepare a final Certificate for Payment after inspection or will notify Contractor of construction that must be completed or corrected before certificate will be issued.

1. Reinspection: Request reinspection when the Work identified in previous inspections as incomplete is completed or corrected.

1.8 LIST OF INCOMPLETE ITEMS (PUNCH LIST)

A. Organization of List: Include name and identification of each space and area affected by construction operations for incomplete items and items needing correction including, if necessary, areas disturbed by Contractor that are outside the limits of construction

1. Organize items applying to each space by major element, including categories for ceiling, individual walls, floors, equipment, and building systems.
2. Include the following information at the top of each page:

   a. Project name.
   b. Date.
   c. Name of Architect.
   d. Name of Contractor.
   e. Page number.

3. Submit list of incomplete items in the following format:

   a. MS Excel electronic file. Architect will return annotated file.

1.9 SUBMITTAL OF PROJECT WARRANTIES

A. Time of Submittal: Submit written warranties on request of Architect for designated portions of the Work where commencement of warranties other than date of Substantial Completion is indicated, or when delay in submittal of warranties might limit Owner's rights under warranty.

B. Partial Occupancy: Submit properly executed warranties within 15 days of completion of designated portions of the Work that are completed and occupied or used by Owner during construction period by separate agreement with Contractor.

C. Organize warranty documents into an orderly sequence based on the table of contents of Project Manual.

1. Bind warranties and bonds in heavy-duty, three-ring, vinyl-covered, loose-leaf binders, thickness as necessary to accommodate contents, and sized to receive 8-1/2-by-11-inch (215-by-280-mm) paper.
2. Provide heavy paper dividers with plastic-covered tabs for each separate warranty. Mark tab to identify the product or installation. Provide a typed description of the product or installation, including the name of the product and the name, address, and telephone number of Installer.
3. Identify each binder on the front and spine with the typed or printed title "WARRANTIES," Project name, and name of Contractor.

NOT FOR BIDDING

4. Warranty Electronic File: Scan warranties and bonds and assemble complete warranty and bond submittal package into a single indexed electronic PDF file with links enabling navigation to each item. Provide bookmarked table of contents at beginning of document.

D. Provide additional copies of each warranty to include in operation and maintenance manuals.

PART 2 - PRODUCTS

2.1 MATERIALS

A. Cleaning Agents: Use cleaning materials and agents recommended by manufacturer or fabricator of the surface to be cleaned. Do not use cleaning agents that are potentially hazardous to health or property or that might damage finished surfaces.

PART 3 - EXECUTION

3.1 FINAL CLEANING

A. General: Perform final cleaning. Conduct cleaning and waste-removal operations to comply with local laws and ordinances and Federal and local environmental and antipollution regulations.

B. Cleaning: Employ experienced workers or professional cleaners for final cleaning. Clean each surface or unit to condition expected in an average commercial building cleaning and maintenance program. Comply with manufacturer's written instructions.

1. Complete the following cleaning operations before requesting inspection for certification of Substantial Completion for entire Project or for a designated portion of Project:

a. Clean Project site, yard, and grounds, in areas disturbed by construction activities, including landscape development areas, of rubbish, waste material, litter, and other foreign substances.
b. Sweep paved areas broom clean. Remove petrochemical spills, stains, and other foreign deposits.
c. Rake grounds that are neither planted nor paved to a smooth, even-textured surface.
d. Remove tools, construction equipment, machinery, and surplus material from Project site.
e. Remove snow and ice to provide safe access to building.
f. Clean exposed exterior and interior hard-surfaced finishes to a dirt-free condition, free of stains, films, and similar foreign substances. Avoid disturbing natural weathering of exterior surfaces. Restore reflective surfaces to their original condition.
g. Remove debris and surface dust from limited access spaces, including roofs, plenums, shafts, trenches, equipment vaults, manholes, attics, and similar spaces.
h. Sweep concrete floors broom clean in unoccupied spaces.

NOT FOR BIDDING

i. Clean transparent materials, including mirrors and glass in doors and windows. Remove glazing compounds and other noticeable, vision-obscuring materials. Polish mirrors and glass, taking care not to scratch surfaces.
j. Remove labels that are not permanent.
k. Wipe surfaces of mechanical and electrical equipment and similar equipment. Remove excess lubrication, paint and mortar droppings, and other foreign substances.
l. Clean plumbing fixtures to a sanitary condition, free of stains, including stains resulting from water exposure.
m. Replace disposable air filters and clean permanent air filters. Clean exposed surfaces of diffusers, registers, and grills.
n. Clean ducts, blowers, and coils if units were operated without filters during construction or that display contamination with particulate matter on inspection.

1) Clean HVAC system in compliance with NADCA Standard 1992-01. Provide written report on completion of cleaning.

o. Clean light fixtures, lamps, globes, and reflectors to function with full efficiency.
p. Leave Project clean and ready for occupancy.

C. Pest Control: Comply with pest control requirements in Section 015000 "Temporary Facilities and Controls." Prepare written report.

D. Construction Waste Disposal: Comply with waste disposal requirements in Section 017419 "Construction Waste Management and Disposal."

3.2 REPAIR OF THE WORK

A. Complete repair and restoration operations before requesting inspection for determination of Substantial Completion.

B. Repair or remove and replace defective construction. Repairing includes replacing defective parts, refinishing damaged surfaces, touching up with matching materials, and properly adjusting operating equipment. Where damaged or worn items cannot be repaired or restored, provide replacements. Remove and replace operating components that cannot be repaired. Restore damaged construction and permanent facilities used during construction to specified condition.

1. Remove and replace chipped, scratched, and broken glass, reflective surfaces, and other damaged transparent materials.
2. Touch up and otherwise repair and restore marred or exposed finishes and surfaces. Replace finishes and surfaces that that already show evidence of repair or restoration.

a. Do not paint over "UL" and other required labels and identification, including mechanical and electrical nameplates. Remove paint applied to required labels and identification.

3. Replace parts subject to operating conditions during construction that may impede operation or reduce longevity.

NOT FOR BIDDING

4. Replace burned-out bulbs, bulbs noticeably dimmed by hours of use, and defective and noisy starters in fluorescent and mercury vapor fixtures to comply with requirements for new fixtures.

END OF SECTION 017700

NOT FOR BIDDING

(PAGE LEFT BLANK)

NOT FOR BIDDING

SECTION 017823 - OPERATION AND MAINTENANCE DATA

PART 1 - GENERAL

1.1 RELATED DOCUMENTS

A. Drawings and general provisions of the Contract, including General and Supplementary Conditions and other Division 01 Specification Sections, apply to this Section.

1.2 SUMMARY

A. Section includes administrative and procedural requirements for preparing operation and maintenance manuals, including the following:

1. Operation and maintenance documentation directory.
2. Emergency manuals.
3. Operation manuals for systems, subsystems, and equipment.
4. Product maintenance manuals.
5. Systems and equipment maintenance manuals.

B. Related Requirements:

1. Section 013300 "Submittal Procedures" for submitting copies of submittals for operation and maintenance manuals.

1.3 DEFINITIONS

A. System: An organized collection of parts, equipment, or subsystems united by regular interaction.

B. Subsystem: A portion of a system with characteristics similar to a system.

1.4 CLOSEOUT SUBMITTALS

A. Manual Content: Operations and maintenance manual content is specified in individual Specification Sections to be reviewed at the time of Section submittals. Submit reviewed manual content formatted and organized as required by this Section.

1. Architect will comment on whether content of operations and maintenance submittals are acceptable.
2. Where applicable, clarify and update reviewed manual content to correspond to revisions and field conditions.

B. Format: Submit operations and maintenance manuals in the following format:

1. PDF electronic file. Assemble each manual into a composite electronically indexed file. Submit on digital media acceptable to Architect.

NOT FOR BIDDING

a. Name each indexed document file in composite electronic index with applicable item name. Include a complete electronically linked operation and maintenance directory.
b. Enable inserted reviewer comments on draft submittals.

2. Three paper copies. Include a complete operation and maintenance directory. Enclose title pages and directories in clear plastic sleeves. Architect will return two copies.

C. Initial Manual Submittal: Submit draft copy of each manual at least 30 days before commencing demonstration and training. Architect will comment on whether general scope and content of manual are acceptable.

D. Final Manual Submittal: Submit each manual in final form prior to requesting inspection for Substantial Completion and at least 15 days before commencing demonstration and training. Architect will return copy with comments.

1. Correct or revise each manual to comply with Architect's comments. Submit copies of each corrected manual within 15 days of receipt of Architect's comments and prior to commencing demonstration and training.

PART 2 - PRODUCTS

2.1 OPERATION AND MAINTENANCE DOCUMENTATION DIRECTORY

A. Directory: Prepare a single, comprehensive directory of emergency, operation, and maintenance data and materials, listing items and their location to facilitate ready access to desired information. Include a section in the directory for each of the following:

1. List of documents.
2. List of systems.
3. List of equipment.
4. Table of contents

B. List of Systems and Subsystems: List systems alphabetically. Include references to operation and maintenance manuals that contain information about each system.

C. List of Equipment: List equipment for each system, organized alphabetically by system. For pieces of equipment not part of system, list alphabetically in separate list.

D. Tables of Contents: Include a table of contents for each emergency, operation, and maintenance manual.

E. Identification: In the documentation directory and in each operation and maintenance manual, identify each system, subsystem, and piece of equipment with same designation used in the Contract Documents. If no designation exists, assign a designation according to ASHRAE Guideline 4, "Preparation of Operating and Maintenance Documentation for Building Systems."

NOT FOR BIDDING

2.2 REQUIREMENTS FOR EMERGENCY, OPERATION, AND MAINTENANCE MANUALS

A. Organization: Unless otherwise indicated, organize each manual into a separate section for each system and subsystem, and a separate section for each piece of equipment not part of a system. Each manual shall contain the following materials, in the order listed:

1. Title page.
2. Table of contents.
3. Manual contents.

B. Title Page: Include the following information:

1. Subject matter included in manual.
2. Name and address of Project.
3. Name and address of Owner.
4. Date of submittal.
5. Name and contact information for Contractor.
6. Name and contact information for Architect.
7. Names and contact information for major consultants to the Architect that designed the systems contained in the manuals.
8. Cross-reference to related systems in other operation and maintenance manuals.

C. Table of Contents: List each product included in manual, identified by product name, indexed to the content of the volume, and cross-referenced to Specification Section number in Project Manual.

1. If operation or maintenance documentation requires more than one volume to accommodate data, include comprehensive table of contents for all volumes in each volume of the set.

D. Manual Contents: Organize into sets of manageable size. Arrange contents alphabetically by system, subsystem, and equipment. If possible, assemble instructions for subsystems, equipment, and components of one system into a single binder.

E. Manuals, Electronic Files: Submit manuals in the form of a multiple file composite electronic PDF file for each manual type required.

1. Electronic Files: Use electronic files prepared by manufacturer where available. Where scanning of paper documents is required, configure scanned file for minimum readable file size.
2. File Names and Bookmarks: Enable bookmarking of individual documents based on file names. Name document files to correspond to system, subsystem, and equipment names used in manual directory and table of contents. Group documents for each system and subsystem into individual composite bookmarked files, then create composite manual, so that resulting bookmarks reflect the system, subsystem, and equipment names in a readily navigated file tree. Configure electronic manual to display bookmark panel on opening file.

F. Manuals, Paper Copy: Submit manuals in the form of hard copy, bound and labeled volumes.

1. Binders: Heavy-duty, three-ring, vinyl-covered, loose-leaf binders, in thickness necessary to accommodate contents, sized to hold 8-1/2-by-11-inch (215-by-280-mm) paper; with

NOT FOR BIDDING

clear plastic sleeve on spine to hold label describing contents and with pockets inside covers to hold folded oversize sheets.

a. If two or more binders are necessary to accommodate data of a system, organize data in each binder into groupings by subsystem and related components. Cross-reference other binders if necessary to provide essential information for proper operation or maintenance of equipment or system.
b. Identify each binder on front and spine, with printed title "OPERATION AND MAINTENANCE MANUAL," Project title or name and subject matter of contents, and indicate Specification Section number on bottom of spine. Indicate volume number for multiple-volume sets.

2. Dividers: Heavy-paper dividers with plastic-covered tabs for each section of the manual. Mark each tab to indicate contents. Include typed list of products and major components of equipment included in the section on each divider, cross-referenced to Specification Section number and title of Project Manual.
3. Protective Plastic Sleeves: Transparent plastic sleeves designed to enclose diagnostic software storage media for computerized electronic equipment.
4. Supplementary Text: Prepared on 8-1/2-by-11-inch (215-by-280-mm) white bond paper.
5. Drawings: Attach reinforced, punched binder tab, on drawings and bind with text.

a. If oversize drawings are necessary, fold drawings to same size as text pages and use as foldouts.
b. If drawings are too large to be used as foldouts, fold and place drawings in labeled envelopes and bind envelopes in rear of manual. At appropriate locations in manual, insert typewritten pages indicating drawing titles, descriptions of contents, and drawing locations.

2.3 EMERGENCY MANUALS

A. Content: Organize manual into a separate section for each of the following:

1. Type of emergency.
2. Emergency instructions.
3. Emergency procedures.

B. Type of Emergency: Where applicable for each type of emergency indicated below, include instructions and procedures for each system, subsystem, piece of equipment, and component:

1. Fire.
2. Flood.
3. Gas leak.
4. Water leak.
5. Power failure.
6. Water outage.
7. System, subsystem, or equipment failure.
8. Chemical release or spill.

C. Emergency Instructions: Describe and explain warnings, trouble indications, error messages, and similar codes and signals. Include responsibilities of Owner's operating personnel for notification of Installer, supplier, and manufacturer to maintain warranties.

NOT FOR BIDDING

D. Emergency Procedures: Include the following, as applicable:

1. Instructions on stopping.
2. Shutdown instructions for each type of emergency.
3. Operating instructions for conditions outside normal operating limits.
4. Required sequences for electric or electronic systems.
5. Special operating instructions and procedures.

2.4 OPERATION MANUALS

A. Content: In addition to requirements in this Section, include operation data required in individual Specification Sections and the following information.

1. System, subsystem, and equipment descriptions. Use designations for systems and equipment indicated on Contract Documents.
2. Performance and design criteria if Contractor has delegated design responsibility.
3. Operating standards.
4. Operating procedures.
5. Operating logs.
6. Wiring diagrams.
7. Control diagrams.
8. Piped system diagrams.
9. Precautions against improper use.
10. License requirements including inspection and renewal dates.

B. Descriptions: Include the following:

1. Product name and model number. Use designations for products indicated on Contract Documents.
2. Manufacturer's name.
3. Equipment identification with serial number of each component.
4. Equipment function.
5. Operating characteristics.
6. Limiting conditions.
7. Performance curves.
8. Engineering data and tests.
9. Complete nomenclature and number of replacement parts.

C. Operating Procedures: Include the following, as applicable:

1. Start-up procedures.
2. Equipment or system break-in procedures.
3. Routine and normal operating instructions.
4. Regulation and control procedures.
5. Instructions on stopping.
6. Normal shutdown instructions.
7. Seasonal and weekend operating instructions.
8. Required sequences for electric or electronic systems.
9. Special operating instructions and procedures.

D. Systems and Equipment Controls: Describe the sequence of operation, and diagram controls as installed.

NOT FOR BIDDING

E. Piped Systems: Diagram piping as installed, and identify color-coding where required for identification.

2.5 PRODUCT MAINTENANCE MANUALS

A. Content: Organize manual into a separate section for each product, material, and finish. Include source information, product information, maintenance procedures, repair materials and sources, and warranties and bonds, as described below.

B. Source Information: List each product included in manual, identified by product name and arranged to match manual's table of contents. For each product, list name, address, and telephone number of Installer or supplier and maintenance service agent, and cross-reference Specification Section number and title in Project Manual and drawing or schedule designation or identifier where applicable.

C. Product Information: Include the following, as applicable:

1. Product name and model number.
2. Manufacturer's name.
3. Color, pattern, and texture.
4. Material and chemical composition.
5. Reordering information for specially manufactured products.

D. Maintenance Procedures: Include manufacturer's written recommendations and the following:

1. Inspection procedures.
2. Types of cleaning agents to be used and methods of cleaning.
3. List of cleaning agents and methods of cleaning detrimental to product.
4. Schedule for routine cleaning and maintenance.
5. Repair instructions.

E. Repair Materials and Sources: Include lists of materials and local sources of materials and related services.

F. Warranties and Bonds: Include copies of warranties and bonds and lists of circumstances and conditions that would affect validity of warranties or bonds.

1. Include procedures to follow and required notifications for warranty claims.

2.6 SYSTEMS AND EQUIPMENT MAINTENANCE MANUALS

A. Content: For each system, subsystem, and piece of equipment not part of a system, include source information, manufacturers' maintenance documentation, maintenance procedures, maintenance and service schedules, spare parts list and source information, maintenance service contracts, and warranty and bond information, as described below.

B. Source Information: List each system, subsystem, and piece of equipment included in manual, identified by product name and arranged to match manual's table of contents. For each product, list name, address, and telephone number of Installer or supplier and maintenance service agent, and cross-reference Specification Section number and title in Project Manual and drawing or schedule designation or identifier where applicable.

NOT FOR BIDDING

C. Manufacturers' Maintenance Documentation: Manufacturers' maintenance documentation including the following information for each component part or piece of equipment:

1. Standard maintenance instructions and bulletins.
2. Drawings, diagrams, and instructions required for maintenance, including disassembly and component removal, replacement, and assembly.
3. Identification and nomenclature of parts and components.
4. List of items recommended to be stocked as spare parts.

D. Maintenance Procedures: Include the following information and items that detail essential maintenance procedures:

1. Test and inspection instructions.
2. Troubleshooting guide.
3. Precautions against improper maintenance.
4. Disassembly; component removal, repair, and replacement, and reassembly instructions.
5. Aligning, adjusting, and checking instructions.
6. Demonstration and training video recording, if available.

E. Maintenance and Service Schedules: Include service and lubrication requirements, list of required lubricants for equipment, and separate schedules for preventive and routine maintenance and service with standard time allotment.

1. Scheduled Maintenance and Service: Tabulate actions for daily, weekly, monthly, quarterly, semiannual, and annual frequencies.
2. Maintenance and Service Record: Include manufacturers' forms for recording maintenance.

F. Spare Parts List and Source Information: Include lists of replacement and repair parts, with parts identified and cross-referenced to manufacturers' maintenance documentation and local sources of maintenance materials and related services.

G. Maintenance Service Contracts: Include copies of maintenance agreements with name and telephone number of service agent.

H. Warranties and Bonds: Include copies of warranties and bonds and lists of circumstances and conditions that would affect validity of warranties or bonds.

1. Include procedures to follow and required notifications for warranty claims.

PART 3 - EXECUTION

3.1 MANUAL PREPARATION

A. Operation and Maintenance Documentation Directory: Prepare a separate manual that provides an organized reference to emergency, operation, and maintenance manuals.

B. Emergency Manual: Assemble a complete set of emergency information indicating procedures for use by emergency personnel and by Owner's operating personnel for types of emergencies indicated.

NOT FOR BIDDING

C. Product Maintenance Manual: Assemble a complete set of maintenance data indicating care and maintenance of each product, material, and finish incorporated into the Work.

D. Operation and Maintenance Manuals: Assemble a complete set of operation and maintenance data indicating operation and maintenance of each system, subsystem, and piece of equipment not part of a system.

1. Engage a factory-authorized service representative to assemble and prepare information for each system, subsystem, and piece of equipment not part of a system.
2. Prepare a separate manual for each system and subsystem, in the form of an instructional manual for use by Owner's operating personnel.

E. Manufacturers' Data: Where manuals contain manufacturers' standard printed data, include only sheets pertinent to product or component installed. Mark each sheet to identify each product or component incorporated into the Work. If data include more than one item in a tabular format, identify each item using appropriate references from the Contract Documents. Identify data applicable to the Work and delete references to information not applicable.

1. Prepare supplementary text if manufacturers' standard printed data are not available and where the information is necessary for proper operation and maintenance of equipment or systems.

F. Drawings: Prepare drawings supplementing manufacturers' printed data to illustrate the relationship of component parts of equipment and systems and to illustrate control sequence and flow diagrams. Coordinate these drawings with information contained in record Drawings to ensure correct illustration of completed installation.

1. Do not use original project record documents as part of operation and maintenance manuals.
2. Comply with requirements of newly prepared record Drawings in Section 017839 "Project Record Documents."

G. Comply with Section 017700 "Closeout Procedures" for schedule for submitting operation and maintenance documentation.

END OF SECTION 017823

NOT FOR BIDDING

SECTION 017839 - PROJECT RECORD DOCUMENTS

PART 1 - GENERAL

1.1 RELATED DOCUMENTS

A. Drawings and general provisions of the Contract, including General and Supplementary Conditions and other Division 01 Specification Sections, apply to this Section.

1.2 SUMMARY

A. Section includes administrative and procedural requirements for project record documents, including the following:

1. Record Drawings.
2. Record Specifications.
3. Record Product Data.
4. Miscellaneous record submittals.

B. Related Requirements:

1. Section 017300 "Execution" for final property survey.
2. Section 017700 "Closeout Procedures" for general closeout procedures.
3. Section 017823 "Operation and Maintenance Data" for operation and maintenance manual requirements.

1.3 CLOSEOUT SUBMITTALS

A. Record Drawings: Comply with the following:

1. Number of Copies: Submit one set(s) of marked-up record prints.
2. Number of Copies: Submit copies of record Drawings as follows:

a. Initial Submittal:

1) Submit one paper-copy set(s) of marked-up record prints.
2) Architect will indicate whether general scope of changes, additional information recorded, and quality of drafting are acceptable.

b. Final Submittal:

1) Submit PDF electronic files of scanned record prints and three set(s) of prints.
2) Print each drawing, whether or not changes and additional information were recorded.

NOT FOR BIDDING

B. Record Specifications: Submit annotated PDF electronic files of Project's Specifications, including addenda and contract modifications.

C. Record Product Data: Submit annotated PDF electronic files and directories of each submittal.

1. Where record Product Data are required as part of operation and maintenance manuals, submit duplicate marked-up Product Data as a component of manual.

D. Miscellaneous Record Submittals: See other Specification Sections for miscellaneous record-keeping requirements and submittals in connection with various construction activities. Submit annotated PDF electronic files and directories of each submittal.

E. Reports: Submit written report weekly indicating items incorporated into project record documents concurrent with progress of the Work, including revisions, concealed conditions, field changes, product selections, and other notations incorporated.

PART 2 - PRODUCTS

2.1 RECORD DRAWINGS

A. Record Prints: Maintain one set of marked-up paper copies of the Contract Drawings and Shop Drawings, incorporating new and revised drawings as modifications are issued.

1. Preparation: Mark record prints to show the actual installation where installation varies from that shown originally. Require individual or entity who obtained record data, whether individual or entity is Installer, subcontractor, or similar entity, to provide information for preparation of corresponding marked-up record prints.

a. Give particular attention to information on concealed elements that would be difficult to identify or measure and record later.
b. Accurately record information in an acceptable drawing technique.
c. Record data as soon as possible after obtaining it.
d. Record and check the markup before enclosing concealed installations.
e. Cross-reference record prints to corresponding archive photographic documentation.

2. Content: Types of items requiring marking include, but are not limited to, the following:

a. Dimensional changes to Drawings.
b. Revisions to details shown on Drawings.
c. Depths of foundations below first floor.
d. Locations and depths of underground utilities.
e. Revisions to routing of piping and conduits.
f. Revisions to electrical circuitry.
g. Actual equipment locations.
h. Duct size and routing.
i. Locations of concealed internal utilities.
j. Changes made by Change Order or Construction Change Directive.
k. Changes made following Architect's written orders.

NOT FOR BIDDING

l. Details not on the original Contract Drawings.
m. Field records for variable and concealed conditions.
n. Record information on the Work that is shown only schematically.

3. Mark the Contract Drawings and Shop Drawings completely and accurately. Use personnel proficient at recording graphic information in production of marked-up record prints.
4. Mark record sets with erasable, red-colored pencil. Use other colors to distinguish between changes for different categories of the Work at same location.
5. Mark important additional information that was either shown schematically or omitted from original Drawings.
6. Note Construction Change Directive numbers, alternate numbers, Change Order numbers, and similar identification, where applicable.

B. Format: Identify and date each record Drawing; include the designation "PROJECT RECORD DRAWING" in a prominent location.

1. Record Prints: Organize record prints and newly prepared record Drawings into manageable sets. Bind each set with durable paper cover sheets. Include identification on cover sheets.
2. Format: Annotated PDF electronic file with comment function enabled.
3. Record Digital Data Files: Organize digital data information into separate electronic files that correspond to each sheet of the Contract Drawings. Name each file with the sheet identification. Include identification in each digital data file.
4. Identification: As follows:

a. Project name.
b. Date.
c. Designation "PROJECT RECORD DRAWINGS."
d. Name of Architect.
e. Name of Contractor.

2.2 RECORD SPECIFICATIONS

A. Preparation: Mark Specifications to indicate the actual product installation where installation varies from that indicated in Specifications, addenda, and contract modifications.

1. Give particular attention to information on concealed products and installations that cannot be readily identified and recorded later.
2. Mark copy with the proprietary name and model number of products, materials, and equipment furnished, including substitutions and product options selected.
3. Record the name of manufacturer, supplier, Installer, and other information necessary to provide a record of selections made.
4. For each principal product, indicate whether record Product Data has been submitted in operation and maintenance manuals instead of submitted as record Product Data.
5. Note related Change Orders, record Product Data, and record Drawings where applicable.

B. Format: Submit record Specifications as annotated PDF electronic file.

NOT FOR BIDDING

2.3 RECORD PRODUCT DATA

A. Preparation: Mark Product Data to indicate the actual product installation where installation varies substantially from that indicated in Product Data submittal.

1. Give particular attention to information on concealed products and installations that cannot be readily identified and recorded later.
2. Include significant changes in the product delivered to Project site and changes in manufacturer's written instructions for installation.
3. Note related Change Orders, record Specifications, and record Drawings where applicable.

B. Format: Submit record Product Data as annotated PDF electronic file.

1. Include record Product Data directory organized by Specification Section number and title, electronically linked to each item of record Product Data.

2.4 MISCELLANEOUS RECORD SUBMITTALS

A. Assemble miscellaneous records required by other Specification Sections for miscellaneous record keeping and submittal in connection with actual performance of the Work. Bind or file miscellaneous records and identify each, ready for continued use and reference.

B. Format: Submit miscellaneous record submittals as scanned PDF electronic file(s) of marked-up miscellaneous record submittals.

1. Include miscellaneous record submittals directory organized by Specification Section number and title, electronically linked to each item of miscellaneous record submittals.

PART 3 - EXECUTION

3.1 RECORDING AND MAINTENANCE

A. Recording: Maintain one copy of each submittal during the construction period for project record document purposes. Post changes and revisions to project record documents as they occur; do not wait until end of Project.

B. Maintenance of Record Documents and Samples: Store record documents and Samples in the field office apart from the Contract Documents used for construction. Do not use project record documents for construction purposes. Maintain record documents in good order and in a clean, dry, legible condition, protected from deterioration and loss. Provide access to project record documents for Architect's reference during normal working hours.

END OF SECTION 017839

NOT FOR BIDDING

SECTION 017900 - DEMONSTRATION AND TRAINING

PART 1 - GENERAL

1.1 RELATED DOCUMENTS

A. Drawings and general provisions of the Contract, including General and Supplementary Conditions and other Division 01 Specification Sections, apply to this Section.

1.2 SUMMARY

A. Section includes administrative and procedural requirements for instructing Owner's personnel, including the following:

1. Demonstration of operation of systems, subsystems, and equipment.
2. Training in operation and maintenance of systems, subsystems, and equipment.
3. Demonstration and training video recordings.

1.3 INFORMATIONAL SUBMITTALS

A. Instruction Program: Submit outline of instructional program for demonstration and training, including a list of training modules and a schedule of proposed dates, times, length of instruction time, and instructors' names for each training module. Include learning objective and outline for each training module.

1. Indicate proposed training modules using manufacturer-produced demonstration and training video recordings for systems, equipment, and products in lieu of video recording of live instructional module.

B. Attendance Record: For each training module, submit list of participants and length of instruction time.

C. Evaluations: For each participant and for each training module, submit results and documentation of performance-based test.

1.4 QUALITY ASSURANCE

A. Facilitator Qualifications: A firm or individual experienced in training or educating maintenance personnel in a training program similar in content and extent to that indicated for this Project, and whose work has resulted in training or education with a record of successful learning performance.

B. Instructor Qualifications: A factory-authorized service representative, complying with requirements in Section 014000 "Quality Requirements," experienced in operation and maintenance procedures and training.

NOT FOR BIDDING

C. Preinstruction Conference: Conduct conference at Project site to comply with requirements in Section 013100 "Project Management and Coordination." Review methods and procedures related to demonstration and training including, but not limited to, the following:

1. Inspect and discuss locations and other facilities required for instruction.
2. Review and finalize instruction schedule and verify availability of educational materials, instructors' personnel, audiovisual equipment, and facilities needed to avoid delays.
3. Review required content of instruction.
4. For instruction that must occur outside, review weather and forecasted weather conditions and procedures to follow if conditions are unfavorable.

1.5 COORDINATION

A. Coordinate instruction schedule with Owner's operations. Adjust schedule as required to minimize disrupting Owner's operations and to ensure availability of Owner's personnel.

B. Coordinate instructors, including providing notification of dates, times, length of instruction time, and course content.

C. Coordinate content of training modules with content of approved emergency, operation, and maintenance manuals. Do not submit instruction program until operation and maintenance data has been reviewed and approved by Architect.

PART 2 - PRODUCTS

2.1 INSTRUCTION PROGRAM

A. Program Structure: Develop an instruction program that includes individual training modules for each system and for equipment not part of a system, as required by individual Specification Sections.

B. Training Modules: Develop a learning objective and teaching outline for each module. Include a description of specific skills and knowledge that participant is expected to master. For each module, include instruction for the following as applicable to the system, equipment, or component:

1. Basis of System Design, Operational Requirements, and Criteria: Include the following:

a. System, subsystem, and equipment descriptions.
b. Performance and design criteria if Contractor is delegated design responsibility.
c. Operating standards.
d. Regulatory requirements.
e. Equipment function.
f. Operating characteristics.
g. Limiting conditions.
h. Performance curves.

2. Documentation: Review the following items in detail:

NOT FOR BIDDING

a. Emergency manuals.
b. Operations manuals.
c. Maintenance manuals.
d. Project record documents.
e. Identification systems.
f. Warranties and bonds.
g. Maintenance service agreements and similar continuing commitments.

3. Emergencies: Include the following, as applicable:

a. Instructions on meaning of warnings, trouble indications, and error messages.
b. Instructions on stopping.
c. Shutdown instructions for each type of emergency.
d. Operating instructions for conditions outside of normal operating limits.
e. Sequences for electric or electronic systems.
f. Special operating instructions and procedures.

4. Operations: Include the following, as applicable:

a. Startup procedures.
b. Equipment or system break-in procedures.
c. Routine and normal operating instructions.
d. Regulation and control procedures.
e. Control sequences.
f. Safety procedures.
g. Instructions on stopping.
h. Normal shutdown instructions.
i. Operating procedures for emergencies.
j. Operating procedures for system, subsystem, or equipment failure.
k. Seasonal and weekend operating instructions.
l. Required sequences for electric or electronic systems.
m. Special operating instructions and procedures.

5. Adjustments: Include the following:

a. Alignments.
b. Checking adjustments.
c. Noise and vibration adjustments.
d. Economy and efficiency adjustments.

6. Troubleshooting: Include the following:

a. Diagnostic instructions.
b. Test and inspection procedures.

7. Maintenance: Include the following:

a. Inspection procedures.
b. Types of cleaning agents to be used and methods of cleaning.
c. List of cleaning agents and methods of cleaning detrimental to product.
d. Procedures for routine cleaning

NOT FOR BIDDING

e. Procedures for preventive maintenance.
f. Procedures for routine maintenance.
g. Instruction on use of special tools.

8. Repairs: Include the following:

a. Diagnosis instructions.
b. Repair instructions.
c. Disassembly; component removal, repair, and replacement; and reassembly instructions.
d. Instructions for identifying parts and components.
e. Review of spare parts needed for operation and maintenance.

PART 3 - EXECUTION

3.1 PREPARATION

A. Assemble educational materials necessary for instruction, including documentation and training module. Assemble training modules into a training manual organized in coordination with requirements in Section 017823 "Operation and Maintenance Data."

B. Set up instructional equipment at instructional location.

3.2 INSTRUCTION

A. Facilitator: Engage a qualified facilitator to prepare instruction program and training modules, to coordinate instructors, and to coordinate between Contractor and Owner for number of participants, instruction times, and location.

B. Engage qualified instructors to instruct Owner's personnel to adjust, operate, and maintain systems, subsystems, and equipment not part of a system.

1. Architect will furnish an instructor to describe basis of system design, operational requirements, criteria, and regulatory requirements.
2. Owner will furnish an instructor to describe Owner's operational philosophy.
3. Owner will furnish Contractor with names and positions of participants.

C. Scheduling: Provide instruction at mutually agreed on times. For equipment that requires seasonal operation, provide similar instruction at start of each season.

1. Schedule training with Owner with at least seven days' advance notice.

D. Training Location and Reference Material: Conduct training on-site in the completed and fully operational facility using the actual equipment in-place. Conduct training using final operation and maintenance data submittals.

E. Evaluation: At conclusion of each training module, assess and document each participant's mastery of module by use of an oral performance-based test.

NOT FOR BIDDING

F. Cleanup: Collect used and leftover educational materials and remove from Project site. Remove instructional equipment. Restore systems and equipment to condition existing before initial training use.

END OF SECTION 017900

NOT FOR BIDDING

(PAGE LEFT BLANK)

NOT FOR BIDDING

SECTION 024119 - SELECTIVE DEMOLITION

PART 1 - GENERAL

1.1 RELATED DOCUMENTS

A. Drawings and general provisions of the Contract, including General and Supplementary Conditions and Division 01 Specification Sections, apply to this section.

1.2 SUMMARY

A. Section Includes:

1. Demolition and removal of selected portions of building or structure.
2. Demolition and removal of selected site elements.
3. Salvage of existing items to be reused or recycled.

B. Related Requirements:

1. Section 011000 "Summary" for restrictions on use of the premises, Owner-occupancy requirements, and phasing requirements.
2. Section 015639 "Temporary Tree and Plant Protection" for temporary protection of existing trees and plants that are affected by selective demolition.
3. Section 017300 "Execution" for cutting and patching procedures.
4. Section 013516 "Alteration Project Procedures" for general protection and work procedures for alteration projects.
5. Section 311000 "Site Clearing" for site clearing and removal of above- and below-grade improvements not part of selective demolition.

1.3 DEFINITIONS

A. Remove: Detach items from existing construction and dispose of them off-site unless indicated to be salvaged or reinstalled.

B. Remove and Salvage: Detach items from existing construction, in a manner to prevent damage, and deliver to Owner ready for reuse.

C. Remove and Reinstall: Detach items from existing construction, in a manner to prevent damage, prepare for reuse, and reinstall where indicated.

D. Existing to Remain: Leave existing items that are not to be removed and that are not otherwise indicated to be salvaged or reinstalled.

E. Dismantle: To remove by disassembling or detaching an item from a surface, using gentle methods and equipment to prevent damage to the item and surfaces; disposing of items unless indicated to be salvaged or reinstalled.

NOT FOR BIDDING

1.4 MATERIALS OWNERSHIP

A. Unless otherwise indicated, demolition waste becomes property of Contractor.

B. Historic items, relics, antiques, and similar objects including, but not limited to, cornerstones and their contents, commemorative plaques and tablets, and other items of interest or value to Owner that may be uncovered during demolition remain the property of Owner.

1. Carefully salvage in a manner to prevent damage and promptly return to Owner.

1.5 PREINSTALLATION MEETINGS

A. Predemolition Conference: Conduct conference at Project site.

1. Inspect and discuss condition of construction to be selectively demolished.
2. Review structural load limitations of existing structure.
3. Review and finalize selective demolition schedule and verify availability of materials, demolition personnel, equipment, and facilities needed to make progress and avoid delays.
4. Review requirements of work performed by other trades that rely on substrates exposed by selective demolition operations.
5. Review areas where existing construction is to remain and requires protection.

1.6 INFORMATIONAL SUBMITTALS

A. Qualification Data: For refrigerant recovery technician.

B. Proposed Protection Measures: Submit report, including Drawings, that indicates the measures proposed for protecting individuals and property, for environmental protection, for dust control and, for noise control. Indicate proposed locations and construction of barriers.

C. Schedule of Selective Demolition Activities: Indicate the following:

1. Detailed sequence of selective demolition and removal work, with starting and ending dates for each activity. Ensure Owner's building manager's on-site operations are uninterrupted.
2. Interruption of utility services. Indicate how long utility services will be interrupted.
3. Coordination for shutoff, capping, and continuation of utility services.
4. Use of elevator and stairs.
5. Coordination of Owner's continuing occupancy of portions of existing building and of Owner's partial occupancy of completed Work.

D. Predemolition Photographs: Show existing conditions of adjoining construction, including finish surfaces, that might be misconstrued as damage caused by demolition operations. Comply with Section 013233 "Photographic Documentation." Submit before Work begins.

E. Statement of Refrigerant Recovery: Signed by refrigerant recovery technician responsible for recovering refrigerant, stating that all refrigerant that was present was recovered and that recovery was performed according to EPA regulations. Include name and address of technician and date refrigerant was recovered.

NOT FOR BIDDING

F. Warranties: Documentation indicating that existing warranties are still in effect after completion of selective demolition.

1.7 CLOSEOUT SUBMITTALS

A. Inventory: Submit a list of items that have been removed and salvaged.

1.8 QUALITY ASSURANCE

A. Refrigerant Recovery Technician Qualifications: Certified by an EPA-approved certification program.

1.9 FIELD CONDITIONS

A. Owner will occupy portions of building immediately adjacent to selective demolition area. Conduct selective demolition so Owner's operations will not be disrupted.

B. Conditions existing at time of inspection for bidding purpose will be maintained by Owner as far as practical.

C. Notify Architect of discrepancies between existing conditions and Drawings before proceeding with selective demolition.

D. Hazardous Materials: It is not expected that hazardous materials will be encountered in the Work.

1. Hazardous materials will be removed by Owner before start of the Work.
2. If suspected hazardous materials are encountered, do not disturb; immediately notify Architect and Owner. Hazardous materials will be removed by Owner under a separate contract.

E. Hazardous Materials: Present in buildings and structures to be selectively demolished. A report on the presence of hazardous materials is on file for review and use. Examine report to become aware of locations where hazardous materials are present.

1. Hazardous material remediation is specified elsewhere in the Contract Documents.
2. Do not disturb hazardous materials or items suspected of containing hazardous materials except under procedures specified elsewhere in the Contract Documents.
3. Owner will provide material safety data sheets for suspected hazardous materials that are known to be present in buildings and structures to be selectively demolished because of building operations or processes performed there.

F. Storage or sale of removed items or materials on-site is not permitted.

G. Utility Service: Maintain existing utilities indicated to remain in service and protect them against damage during selective demolition operations.

1. Maintain fire-protection facilities in service during selective demolition operations.

NOT FOR BIDDING

1.10 WARRANTY

A. Existing Warranties: Remove, replace, patch, and repair materials and surfaces cut or damaged during selective demolition, by methods and with materials and using approved contractors so as not to void existing warranties. Notify warrantor before proceeding. Existing warranties include the following:

B. Notify warrantor on completion of selective demolition, and obtain documentation verifying that existing system has been inspected and warranty remains in effect. Submit documentation at Project closeout.

1.11 COORDINATION

A. Arrange selective demolition schedule so as not to interfere with Owner's operations.

PART 2 - PRODUCTS

2.1 PERFORMANCE REQUIREMENTS

A. Regulatory Requirements: Comply with governing EPA notification regulations before beginning selective demolition. Comply with hauling and disposal regulations of authorities having jurisdiction.

B. Standards: Comply with ASSE A10.6 and NFPA 241.

PART 3 - EXECUTION

3.1 EXAMINATION

A. Verify that utilities have been disconnected and capped before starting selective demolition operations.

B. Review Project Record Documents of existing construction or other existing condition and hazardous material information provided by Owner. Owner does not guarantee that existing conditions are same as those indicated in Project Record Documents.

C. Verify that hazardous materials have been remediated before proceeding with building demolition operations.

D. Survey of Existing Conditions: Record existing conditions by use of measured drawings, preconstruction photographs and templates.

1. Comply with requirements specified in Section 013233 "Photographic Documentation."
2. Inventory and record the condition of items to be removed and salvaged. Provide photographs or video of conditions that might be misconstrued as damage caused by salvage operations.

NOT FOR BIDDING

3. Before selective demolition or removal of existing building elements that will be reproduced or duplicated in final Work, make permanent record of measurements, materials, and construction details required to make exact reproduction.

3.2 PREPARATION

A. Refrigerant: Before starting demolition, remove refrigerant from mechanical equipment according to 40 CFR 82 and regulations of authorities having jurisdiction.

3.3 UTILITY SERVICES AND MECHANICAL/ELECTRICAL SYSTEMS

A. Existing Services/Systems to Remain: Maintain services/systems indicated to remain and protect them against damage.

B. Existing Services/Systems to Be Removed, Relocated, or Abandoned: Locate, identify, disconnect, and seal or cap off utility services and mechanical/electrical systems serving areas to be selectively demolished.

1. Owner will arrange to shut off indicated services/systems when requested by Contractor.
2. Arrange to shut off utilities with utility companies.
3. If services/systems are required to be removed, relocated, or abandoned, provide temporary services/systems that bypass area of selective demolition and that maintain continuity of services/systems to other parts of building.
4. Disconnect, demolish, and remove fire-suppression systems, plumbing, and HVAC systems, equipment, and components indicated on Drawings to be removed.

   a. Piping to Be Removed: Remove portion of piping indicated to be removed and cap or plug remaining piping with same or compatible piping material.
   b. Piping to Be Abandoned in Place: Drain piping and cap or plug piping with same or compatible piping material and leave in place.
   c. Equipment to Be Removed: Disconnect and cap services and remove equipment.
   d. Equipment to Be Removed and Reinstalled: Disconnect and cap services and remove, clean, and store equipment; when appropriate, reinstall, reconnect, and make equipment operational.
   e. Equipment to Be Removed and Salvaged: Disconnect and cap services and remove equipment and deliver to Owner.
   f. Ducts to Be Removed: Remove portion of ducts indicated to be removed and plug remaining ducts with same or compatible ductwork material.
   g. Ducts to Be Abandoned in Place: Cap or plug ducts with same or compatible ductwork material and leave in place.

3.4 PROTECTION

A. Temporary Protection: Provide temporary barricades and other protection required to prevent injury to people and damage to adjacent buildings and facilities to remain.

1. Provide protection to ensure safe passage of people around selective demolition area and to and from occupied portions of building.

NOT FOR BIDDING

2. Provide temporary weather protection, during interval between selective demolition of existing construction on exterior surfaces and new construction, to prevent water leakage and damage to structure and interior areas.
3. Protect walls, ceilings, floors, and other existing finish work that are to remain or that are exposed during selective demolition operations.
4. Cover and protect furniture, furnishings, and equipment that have not been removed.
5. Comply with requirements for temporary enclosures, dust control, heating, and cooling specified in Section 015000 "Temporary Facilities and Controls."

B. Temporary Shoring: Design, provide, and maintain shoring, bracing, and structural supports as required to preserve stability and prevent movement, settlement, or collapse of construction and finishes to remain, and to prevent unexpected or uncontrolled movement or collapse of construction being demolished.

1. Strengthen or add new supports when required during progress of selective demolition.

C. Remove temporary barricades and protections where hazards no longer exist.

3.5 SELECTIVE DEMOLITION, GENERAL

A. General: Demolish and remove existing construction only to the extent required by new construction and as indicated. Use methods required to complete the Work within limitations of governing regulations and as follows:

1. Proceed with selective demolition systematically, from higher to lower level. Complete selective demolition operations above each floor or tier before disturbing supporting members on the next lower level.
2. Neatly cut openings and holes plumb, square, and true to dimensions required. Use cutting methods least likely to damage construction to remain or adjoining construction. Use hand tools or small power tools designed for sawing or grinding, not hammering and chopping. Temporarily cover openings to remain.
3. Cut or drill from the exposed or finished side into concealed surfaces to avoid marring existing finished surfaces.
4. Do not use cutting torches until work area is cleared of flammable materials. At concealed spaces, such as duct and pipe interiors, verify condition and contents of hidden space before starting flame-cutting operations. Maintain portable fire-suppression devices during flame-cutting operations.
5. Maintain fire watch during and for at least 24 hours after flame-cutting operations.
6. Maintain adequate ventilation when using cutting torches.
7. Remove decayed, vermin-infested, or otherwise dangerous or unsuitable materials and promptly dispose of off-site.
8. Remove structural framing members and lower to ground by method suitable to avoid free fall and to prevent ground impact or dust generation.
9. Locate selective demolition equipment and remove debris and materials so as not to impose excessive loads on supporting walls, floors, or framing.
10. Dispose of demolished items and materials promptly. Comply with requirements in Section 017419 "Construction Waste Management and Disposal."

B. Site Access and Temporary Controls: Conduct selective demolition and debris-removal operations to ensure minimum interference with roads, streets, walks, walkways, and other adjacent occupied and used facilities.

NOT FOR BIDDING

C. Removed and Salvaged Items:

1. Clean salvaged items.
2. Pack or crate items after cleaning. Identify contents of containers.
3. Store items in a secure area until delivery to Owner.
4. Transport items to Owner's storage area designated by Owner.
5. Protect items from damage during transport and storage.

D. Removed and Reinstalled Items:

1. Clean and repair items to functional condition adequate for intended reuse.
2. Pack or crate items after cleaning and repairing. Identify contents of containers.
3. Protect items from damage during transport and storage.
4. Reinstall items in locations indicated. Comply with installation requirements for new materials and equipment. Provide connections, supports, and miscellaneous materials necessary to make item functional for use indicated.

E. Existing Items to Remain: Protect construction indicated to remain against damage and soiling during selective demolition. When permitted by Architect, items may be removed to a suitable, protected storage location during selective demolition **and cleaned** and reinstalled in their original locations after selective demolition operations are complete.

3.6 SELECTIVE DEMOLITION PROCEDURES FOR SPECIFIC MATERIALS

A. Concrete: Demolish in small sections. Using power-driven saw, cut concrete to a depth of at least 3/4 inch (19 mm) at junctures with construction to remain. Dislodge concrete from reinforcement at perimeter of areas being demolished, cut reinforcement, and then remove remainder of concrete. Neatly trim openings to dimensions indicated.

B. Masonry: Demolish in small sections. Cut masonry at junctures with construction to remain, using power-driven saw, and then remove masonry between saw cuts.

C. Concrete Slabs-on-Grade: Saw-cut perimeter of area to be demolished, and then break up and remove.

D. Resilient Floor Coverings: Remove floor coverings and adhesive according to recommendations in RFCI's "Recommended Work Practices for the Removal of Resilient Floor Coverings." Do not use methods requiring solvent-based adhesive strippers.

E. Roofing: Remove no more existing roofing than what can be covered in one day by new roofing and so that building interior remains watertight and weathertight. See Division 07 for new roofing requirements.

1. Remove existing roof membrane, flashings, copings, and roof accessories.
2. Remove existing roofing system down to substrate.

3.7 DISPOSAL OF DEMOLISHED MATERIALS

A. Remove demolition waste materials from Project site and dispose of them in an EPA-approved construction and demolition waste landfill acceptable to authorities having jurisdiction. and

NOT FOR BIDDING

recycle or dispose of them according to Section 017419 "Construction Waste Management and Disposal."

1. Do not allow demolished materials to accumulate on-site.
2. Remove and transport debris in a manner that will prevent spillage on adjacent surfaces and areas.
3. Remove debris from elevated portions of building by chute, hoist, or other device that will convey debris to grade level in a controlled descent.
4. Comply with requirements specified in Section 017419 "Construction Waste Management and Disposal."

B. Burning: Do not burn demolished materials.

3.8 CLEANING

A. Clean adjacent structures and improvements of dust, dirt, and debris caused by selective demolition operations. Return adjacent areas to condition existing before selective demolition operations began.

END OF SECTION 024119

NOT FOR BIDDING

SECTION 033000 - CAST-IN-PLACE CONCRETE

PART 1 - GENERAL

1.1 RELATED DOCUMENTS

A. Drawings and general provisions of the Contract, including General and Supplementary Conditions and Division 01 Specification Sections, apply to this section.

1.2 SUMMARY

A. Section includes cast-in-place concrete, including formwork, reinforcement, concrete materials, mixture design, placement procedures, and finishes.

B. Related Requirements:
1. Section 312000 "Earth Moving" for drainage fill under slabs-on-grade.
2. Section 321313 "Concrete Paving" for concrete pavement and walks.

1.3 DEFINITIONS

A. Cementitious Materials: Portland cement alone or in combination with one or more of the following: blended hydraulic cement, fly ash, slag cement, other pozzolans, and silica fume; materials subject to compliance with requirements.

B. W/C Ratio: The ratio by weight of water to cementitious materials.

1.4 PREINSTALLATION MEETINGS

A. Preinstallation Conference: Conduct conference at Project site.

1. Before submitting design mixtures, review concrete design mixture and examine procedures for ensuring quality of concrete materials. Require representatives of each entity directly concerned with cast-in-place concrete to attend, including the following:

   a. Contractor's superintendent.
   b. Independent testing agency responsible for concrete design mixtures.
   c. Ready-mix concrete manufacturer.
   d. Concrete Subcontractor.

2. Review special inspection and testing and inspecting agency procedures for field quality control, concrete finishes and finishing, cold- and hot-weather concreting procedures, curing procedures, construction contraction and isolation joints, and joint-filler strips, semirigid joint fillers, vapor-retarder installation, steel reinforcement installation, floor and slab flatness and levelness measurement, and concrete protection.

NOT FOR BIDDING

1.5 ACTION SUBMITTALS

A. Product Data: For each type of product.

B. Design Mixtures: For each concrete mixture. Submit alternate design mixtures when characteristics of materials, Project conditions, weather, test results, or other circumstances warrant adjustments.

1. Indicate amounts of mixing water to be withheld for later addition at Project site.

C. Steel Reinforcement Shop Drawings: Placing Drawings that detail fabrication, bending, and placement. Include bar sizes, lengths, material, grade, bar schedules, stirrup spacing, bent bar diagrams, bar arrangement, splices and laps, mechanical connections, tie spacing, hoop spacing, and supports for concrete reinforcement.

D. Construction Joint Layout: Indicate proposed construction joints required to construct the structure.

1. Location of construction joints is subject to approval of the Architect.

E. Samples: For vapor retarder.

1.6 INFORMATIONAL SUBMITTALS

A. Qualification Data: For Installer testing agency.

B. Material Certificates: For each of the following, signed by manufacturers:

1. Cementitious materials.
2. Admixtures.
3. Form materials and form-release agents.
4. Steel reinforcement and accessories.
5. Fiber reinforcement.
6. Curing compounds.
7. Floor and slab treatments.
8. Vapor retarders.
9. Semirigid joint filler.
10. Repair materials.

C. Material Test Reports: For the following, from a qualified testing agency:

1. Aggregates: Include service record data indicating absence of deleterious expansion of concrete due to alkali aggregate reactivity.

D. Floor surface flatness and levelness measurements indicating compliance with specified tolerances.

E. Field quality-control reports.

F. Minutes of preinstallation conference.

NOT FOR BIDDING

1.7 QUALITY ASSURANCE

A. Installer Qualifications: A qualified installer who employs on Project personnel qualified as ACI-certified Flatwork Technician and Finisher and a supervisor who is an ACI-certified Concrete Flatwork Technician.

B. Manufacturer Qualifications: A firm experienced in manufacturing ready mixed concrete products and that complies with ASTM C 94/C 94M requirements for production facilities and equipment.

1. Manufacturer certified according to NRMCA's "Certification of Ready Mixed Concrete Production Facilities."

C. Testing Agency Qualifications: An independent agency qualified according to ASTM C 1077 and ASTM E 329 for testing indicated.

1. Personnel conducting field tests shall be qualified as ACI Concrete Field Testing Technician, Grade 1, according to ACI CP-1 or an equivalent certification program.
2. Personnel performing laboratory tests shall be ACI-certified Concrete Strength Testing Technician and Concrete Laboratory Testing Technician, Grade I. Testing agency laboratory supervisor shall be an ACI-certified Concrete Laboratory Testing Technician, Grade II.

1.8 DELIVERY, STORAGE, AND HANDLING

A. Steel Reinforcement: Deliver, store, and handle steel reinforcement to prevent bending and damage.

1.9 FIELD CONDITIONS

A. Cold-Weather Placement: Comply with ACI 306.1 and as follows. Protect concrete work from physical damage or reduced strength that could be caused by frost, freezing actions, or low temperatures.

1. When average high and low temperature is expected to fall below 40 deg F (4.4 deg C) for three successive days, maintain delivered concrete mixture temperature within the temperature range required by ACI 301 (ACI 301M).
2. Do not use frozen materials or materials containing ice or snow. Do not place concrete on frozen subgrade or on subgrade containing frozen materials.
3. Do not use calcium chloride, salt, or other materials containing antifreeze agents or chemical accelerators unless otherwise specified and approved in mixture designs.

B. Hot-Weather Placement: Comply with ACI 301 (ACI 301M) and as follows:

1. Maintain concrete temperature below 90 deg F (32 deg C) at time of placement. Chilled mixing water or chopped ice may be used to control temperature, provided water equivalent of ice is calculated to total amount of mixing water. Using liquid nitrogen to cool concrete is Contractor's option.

NOT FOR BIDDING

2. Fog-spray forms, steel reinforcement, and subgrade just before placing concrete. Keep subgrade uniformly moist without standing water, soft spots, or dry areas.

PART 2 - PRODUCTS

2.1 CONCRETE, GENERAL

A. ACI Publications: Comply with the following unless modified by requirements in the Contract Documents:

1. ACI 301 (ACI 301M).
2. ACI 117 (ACI 117M).

2.2 FORM-FACING MATERIALS

A. Smooth-Formed Finished Concrete: Form-facing panels that provide continuous, true, and smooth concrete surfaces. Furnish in largest practicable sizes to minimize number of joints.

1. Plywood, metal, or other approved panel materials.

B. Rough-Formed Finished Concrete: Plywood, lumber, metal, or another approved material. Provide lumber dressed on at least two edges and one side for tight fit.

C. Chamfer Strips: Wood, metal, PVC, or rubber strips, 3/4 by 3/4 inch (19 by 19 mm), minimum.

D. Form-Release Agent: Commercially formulated form-release agent that does not bond with, stain, or adversely affect concrete surfaces and does not impair subsequent treatments of concrete surfaces.

1. Formulate form-release agent with rust inhibitor for steel form-facing materials.

2.3 STEEL REINFORCEMENT

A. Reinforcing Bars: ASTM A 615/A 615M, Grade 60 (Grade 420), deformed.

B. Plain-Steel Welded-Wire Reinforcement: ASTM A 1064/A 1064M, plain, fabricated from as-drawn steel wire into flat sheets.

2.4 REINFORCEMENT ACCESSORIES

A. Bar Supports: Bolsters, chairs, spacers, and other devices for spacing, supporting, and fastening reinforcing bars and welded-wire reinforcement in place. Manufacture bar supports from steel wire, plastic, or precast concrete according to CRSI's "Manual of Standard Practice," of greater compressive strength than concrete and as follows:

1. For concrete surfaces exposed to view, where legs of wire bar supports contact forms, use CRSI Class 1 plastic-protected steel wire or CRSI Class 2 stainless-steel bar supports.

NOT FOR BIDDING

2. For epoxy-coated reinforcement, use epoxy-coated or other dielectric-polymer-coated wire bar supports.
3. For zinc-coated reinforcement, use galvanized wire or dielectric-polymer-coated wire bar supports.

2.5 CONCRETE MATERIALS

A. Source Limitations: Obtain each type or class of cementitious material of the same brand from the same manufacturer's plant, obtain aggregate from single source, and obtain admixtures from single source from single manufacturer.

B. Cementitious Materials:

1. Portland Cement: ASTM C 150/C 150M, Type I/II, gray.
2. Fly Ash: ASTM C 618, Class F or C.
3. Slag Cement: ASTM C 989/C 989M, Grade 100 or 120.
4. Silica Fume: ASTM C 1240, amorphous silica.

C. Normal-Weight Aggregates: ASTM C 33/C 33M, Class 3S coarse aggregate or better, graded. Provide aggregates from a single source with documented service record data of at least 10 years' satisfactory service in similar applications and service conditions using similar aggregates and cementitious materials.

1. Maximum Coarse-Aggregate Size: 1 inch (25 mm) nominal.
2. Fine Aggregate: Free of materials with deleterious reactivity to alkali in cement.

D. Air-Entraining Admixture: ASTM C 260/C 260M.

E. Chemical Admixtures: Certified by manufacturer to be compatible with other admixtures and that do not contribute water-soluble chloride ions exceeding those permitted in hardened concrete. Do not use calcium chloride or admixtures containing calcium chloride.

1. Water-Reducing Admixture: ASTM C 494/C 494M, Type A.
2. Retarding Admixture: ASTM C 494/C 494M, Type B.
3. Water-Reducing and Retarding Admixture: ASTM C 494/C 494M, Type D.
4. High-Range, Water-Reducing Admixture: ASTM C 494/C 494M, Type F.
5. High-Range, Water-Reducing and Retarding Admixture: ASTM C 494/C 494M, Type G.
6. Plasticizing and Retarding Admixture: ASTM C 1017/C 1017M, Type II.

F. Water: ASTM C 94/C 94M and potable.

2.6 VAPOR RETARDERS

A. Sheet Vapor Retarder: Polyethylene sheet, ASTM D 4397, not less than 10 mils (0.25 mm) thick.

2.7 CURING MATERIALS

A. Moisture-Retaining Cover: ASTM C 171, polyethylene film or white burlap-polyethylene sheet.

NOT FOR BIDDING

B. Water: Potable.

2.8 RELATED MATERIALS

A. Expansion- and Isolation-Joint-Filler Strips: ASTM D 1751, asphalt-saturated cellulosic fiber.

B. Semirigid Joint Filler: Two-component, semirigid, 100 percent solids, aromatic polyurea with a Type A shore durometer hardness range of 90 to 95 according to ASTM D 2240.

C. Bonding Agent: ASTM C 1059/C 1059M, Type II, nonredispersible, acrylic emulsion or styrene butadiene.

2.9 REPAIR MATERIALS

A. Repair Underlayment: Cement-based, polymer-modified, self-leveling product that can be applied in thicknesses from 1/8 inch (3.2 mm) and that can be feathered at edges to match adjacent floor elevations.

1. Cement Binder: ASTM C 150/C 150M, portland cement or hydraulic or blended hydraulic cement as defined in ASTM C 219.
2. Primer: Product of underlayment manufacturer recommended for substrate, conditions, and application.
3. Aggregate: Well-graded, washed gravel, 1/8 to 1/4 inch (3.2 to 6 mm) or coarse sand as recommended by underlayment manufacturer.
4. Compressive Strength: Not less than 4100 psi (29 MPa) at 28 days when tested according to ASTM C 109/C 109M.

B. Repair Overlayment: Cement-based, polymer-modified, self-leveling product that can be applied in thicknesses from 1/4 inch (6.4 mm) and that can be filled in over a scarified surface to match adjacent floor elevations.

1. Cement Binder: ASTM C 150/C 150M, portland cement or hydraulic or blended hydraulic cement as defined in ASTM C 219.
2. Primer: Product of topping manufacturer recommended for substrate, conditions, and application.
3. Aggregate: Well-graded, washed gravel, 1/8 to 1/4 inch (3.2 to 6 mm) or coarse sand as recommended by topping manufacturer.
4. Compressive Strength: Not less than 5000 psi (34.5 MPa) at 28 days when tested according to ASTM C 109/C 109M.

2.10 CONCRETE MIXTURES, GENERAL

A. Prepare design mixtures for each type and strength of concrete, proportioned on the basis of laboratory trial mixture or field test data, or both, according to ACI 301 (ACI 301M).

1. Use a qualified independent testing agency for preparing and reporting proposed mixture designs based on laboratory trial mixtures.

NOT FOR BIDDING

B. Cementitious Materials: Limit percentage, by weight, of cementitious materials other than portland cement in concrete as follows:

1. Fly Ash: 25 percent.
2. Combined Fly Ash and Pozzolan: 25 percent.
3. Slag Cement: 50 percent.
4. Combined Fly Ash or Pozzolan and Slag Cement: 50 percent portland cement minimum, with fly ash or pozzolan not exceeding 25 percent.
5. Silica Fume: 10 percent.
6. Combined Fly Ash, Pozzolans, and Silica Fume: 35 percent with fly ash or pozzolans not exceeding 25 percent and silica fume not exceeding 10 percent.
7. Combined Fly Ash or Pozzolans, Slag Cement, and Silica Fume: 50 percent with fly ash or pozzolans not exceeding 25 percent and silica fume not exceeding 10 percent.

C. Admixtures: Use admixtures according to manufacturer's written instructions.

1. Use water-reducing high-range water-reducing or plasticizing admixture in concrete, as required, for placement and workability.
2. Use water-reducing and -retarding admixture when required by high temperatures, low humidity, or other adverse placement conditions.
3. Use water-reducing admixture in pumped concrete, concrete for heavy-use industrial slabs and parking structure slabs, concrete required to be watertight, and concrete with a w/c ratio below 0.50.
4. Use corrosion-inhibiting admixture in concrete mixtures where indicated.

2.11 CONCRETE MIXTURES FOR BUILDING ELEMENTS

A. Footings: Normal-weight concrete.

1. Minimum Compressive Strength: As indicated at 28 days.
2. Maximum W/C Ratio: 0.50.

B. Foundation Walls: Normal-weight concrete.

1. Minimum Compressive Strength: As indicated at 28 days.
2. Maximum W/C Ratio: 0.45.

C. Slabs-on-Grade: Normal-weight concrete.

1. Minimum Compressive Strength: As indicated at 28 days.
2. Maximum W/C Ratio: 0.45.

2.12 FABRICATING REINFORCEMENT

A. Fabricate steel reinforcement according to CRSI's "Manual of Standard Practice."

NOT FOR BIDDING

2.13 CONCRETE MIXING

A. Ready-Mixed Concrete: Measure, batch, mix, and deliver concrete according to ASTM C 94/C 94M and ASTM C 1116/C 1116M, and furnish batch ticket information.

1. When air temperature is between 85 and 90 deg F (30 and 32 deg C), reduce mixing and delivery time from 1-1/2 hours to 75 minutes; when air temperature is above 90 deg F (32 deg C), reduce mixing and delivery time to 60 minutes.

B. Project-Site Mixing: Measure, batch, and mix concrete materials and concrete according to ASTM C 94/C 94M. Mix concrete materials in appropriate drum-type batch machine mixer.

1. For mixer capacity of 1 cu. yd. (0.76 cu. m) or smaller, continue mixing at least 1-1/2 minutes, but not more than 5 minutes after ingredients are in mixer, before any part of batch is released.
2. For mixer capacity larger than 1 cu. yd. (0.76 cu. m), increase mixing time by 15 seconds for each additional 1 cu. yd. (0.76 cu. m).
3. Provide batch ticket for each batch discharged and used in the Work, indicating Project identification name and number, date, mixture type, mixture time, quantity, and amount of water added. Record approximate location of final deposit in structure.

PART 3 - EXECUTION

3.1 FORMWORK INSTALLATION

A. Design, erect, shore, brace, and maintain formwork, according to ACI 301 (ACI 301M), to support vertical, lateral, static, and dynamic loads, and construction loads that might be applied, until structure can support such loads.

B. Construct formwork so concrete members and structures are of size, shape, alignment, elevation, and position indicated, within tolerance limits of ACI 117 (ACI 117M).

C. Limit concrete surface irregularities, designated by ACI 347 as abrupt or gradual, as follows:

1. Class A, 1/8 inch (3.2 mm) for smooth-formed finished surfaces.
2. Class B, 1/4 inch (6 mm) for rough-formed finished surfaces.

D. Construct forms tight enough to prevent loss of concrete mortar.

E. Construct forms for easy removal without hammering or prying against concrete surfaces. Provide crush or wrecking plates where stripping may damage cast-concrete surfaces. Provide top forms for inclined surfaces steeper than 1.5 horizontal to 1 vertical.

1. Install keyways, reglets, recesses, and the like, for easy removal.
2. Do not use rust-stained steel form-facing material.

F. Set edge forms, bulkheads, and intermediate screed strips for slabs to achieve required elevations and slopes in finished concrete surfaces. Provide and secure units to support screed strips; use strike-off templates or compacting-type screeds.

NOT FOR BIDDING

G. Provide temporary openings for cleanouts and inspection ports where interior area of formwork is inaccessible. Close openings with panels tightly fitted to forms and securely braced to prevent loss of concrete mortar. Locate temporary openings in forms at inconspicuous locations.

H. Chamfer exterior corners and edges of permanently exposed concrete.

I. Form openings, chases, offsets, sinkages, keyways, reglets, blocking, screeds and bulkheads required in the Work. Determine sizes and locations from trades providing such items.

J. Clean forms and adjacent surfaces to receive concrete. Remove chips, wood, sawdust, dirt, and other debris just before placing concrete.

K. Retighten forms and bracing before placing concrete, as required to prevent mortar leaks and maintain proper alignment.

L. Coat contact surfaces of forms with form-release agent, according to manufacturer's written instructions, before placing reinforcement.

3.2 EMBEDDED ITEM INSTALLATION

A. Place and secure anchorage devices and other embedded items required for adjoining work that is attached to or supported by cast-in-place concrete. Use setting drawings, templates, diagrams, instructions, and directions furnished with items to be embedded.

1. Install anchor rods, accurately located, to elevations required and complying with tolerances in Section 7.5 of AISC 303.
2. Install reglets to receive waterproofing and to receive through-wall flashings in outer face of concrete frame at exterior walls, where flashing is shown at lintels, shelf angles, and other conditions.
3. Install dovetail anchor slots in concrete structures as indicated.

3.3 REMOVING AND REUSING FORMS

A. General: Formwork for sides of beams, walls, columns, and similar parts of the Work that does not support weight of concrete may be removed after cumulatively curing at not less than 50 deg F (10 deg C) for 24 hours after placing concrete. Concrete has to be hard enough to not be damaged by form-removal operations, and curing and protection operations need to be maintained.

1. Leave formwork for beam soffits, joists, slabs, and other structural elements that support weight of concrete in place until concrete has achieved at least 70 percent of its 28-day design compressive strength.
2. Remove forms only if shores have been arranged to permit removal of forms without damaging or disturbing shores.

B. Clean and repair surfaces of forms to be reused in the Work. Split, frayed, delaminated, or otherwise damaged form-facing material are not acceptable for exposed surfaces. Apply new form-release agent.

NOT FOR BIDDING

C. When forms are reused, clean surfaces, remove fins and laitance, and tighten to close joints. Align and secure joints to avoid offsets. Do not use patched forms for exposed concrete surfaces unless approved by Architect.

3.4 SHORING AND RESHORING INSTALLATION

A. Comply with ACI 318 (ACI 318M) and ACI 301 (ACI 301M) for design, installation, and removal of shoring and reshoring.

1. Do not remove shoring or reshoring until measurement of slab tolerances is complete.

B. In multistory construction, extend shoring or reshoring over a sufficient number of stories to distribute loads in such a manner that no floor or member will be excessively loaded or will induce tensile stress in concrete members without sufficient steel reinforcement.

C. Plan sequence of removal of shores and reshore to avoid damage to concrete. Locate and provide adequate reshoring to support construction without excessive stress or deflection.

3.5 VAPOR-RETARDER INSTALLATION

A. Sheet Vapor Retarders: Place, protect and repair sheet vapor retarder according to ASTM E 1643 and manufacturer's written instructions.

1. Lap joints 6 inches (150 mm) and seal with manufacturer's recommended tape.

3.6 STEEL REINFORCEMENT INSTALLATION

A. General: Comply with CRSI's "Manual of Standard Practice" for fabricating, placing, and supporting reinforcement.

1. Do not cut or puncture vapor retarder. Repair damage and reseal vapor retarder before placing concrete.

B. Clean reinforcement of loose rust and mill scale, earth, ice, and other foreign materials that reduce bond to concrete.

C. Accurately position, support, and secure reinforcement against displacement. Locate and support reinforcement with bar supports to maintain minimum concrete cover. Do not tack weld crossing reinforcing bars.

1. Weld reinforcing bars according to AWS D1.4/D 1.4M, where indicated.

D. Set wire ties with ends directed into concrete, not toward exposed concrete surfaces.

E. Install welded-wire reinforcement in longest practicable lengths on bar supports spaced to minimize sagging. Lap edges and ends of adjoining sheets at least one mesh spacing. Offset laps of adjoining sheet widths to prevent continuous laps in either direction. Lace overlaps with wire.

NOT FOR BIDDING

F. Epoxy-Coated Reinforcement: Repair cut and damaged epoxy coatings with epoxy repair coating according to ASTM D 3963/D 3963M. Use epoxy-coated steel wire ties to fasten epoxy-coated steel reinforcement.

G. Zinc-Coated Reinforcement: Repair cut and damaged zinc coatings with zinc repair material according to ASTM A 780/A 780M. Use galvanized-steel wire ties to fasten zinc-coated steel reinforcement.

3.7 JOINTS

A. General: Construct joints true to line with faces perpendicular to surface plane of concrete.

B. Construction Joints: Install so strength and appearance of concrete are not impaired, at locations indicated or as approved by Architect.

1. Place joints perpendicular to main reinforcement. Continue reinforcement across construction joints unless otherwise indicated. Do not continue reinforcement through sides of strip placements of floors and slabs.
2. Form keyed joints as indicated. Embed keys at least 1-1/2 inches (38 mm) into concrete.
3. Locate joints for beams, slabs, joists, and girders in the middle third of spans. Offset joints in girders a minimum distance of twice the beam width from a beam-girder intersection.
4. Locate horizontal joints in walls and columns at underside of floors, slabs, beams, and girders and at the top of footings or floor slabs.
5. Space vertical joints in walls as indicated. Locate joints beside piers integral with walls, near corners, and in concealed locations where possible.
6. Use a bonding agent at locations where fresh concrete is placed against hardened or partially hardened concrete surfaces.
7. Use epoxy-bonding adhesive at locations where fresh concrete is placed against hardened or partially hardened concrete surfaces.

C. Contraction Joints in Slabs-on-Grade: Form weakened-plane contraction joints, sectioning concrete into areas as indicated. Construct contraction joints for a depth equal to at least one-fourth of concrete thickness as follows:

1. Grooved Joints: Form contraction joints after initial floating by grooving and finishing each edge of joint to a radius of 1/8 inch (3.2 mm). Repeat grooving of contraction joints after applying surface finishes. Eliminate groover tool marks on concrete surfaces.
2. Sawed Joints: Form contraction joints with power saws equipped with shatterproof abrasive or diamond-rimmed blades. Cut 1/8-inch- (3.2-mm-) wide joints into concrete when cutting action does not tear, abrade, or otherwise damage surface and before concrete develops random contraction cracks.

D. Isolation Joints in Slabs-on-Grade: After removing formwork, install joint-filler strips at slab junctions with vertical surfaces, such as column pedestals, foundation walls, grade beams, and other locations, as indicated.

1. Extend joint-filler strips full width and depth of joint, terminating flush with finished concrete surface unless otherwise indicated.

NOT FOR BIDDING

2. Terminate full-width joint-filler strips not less than 1/2 inch (13 mm) or more than 1 inch (25 mm) below finished concrete surface where joint sealants, specified in Section 079200 "Joint Sealants," are indicated.
3. Install joint-filler strips in lengths as long as practicable. Where more than one length is required, lace or clip sections together.

3.8 CONCRETE PLACEMENT

A. Before placing concrete, verify that installation of formwork, reinforcement, and embedded items is complete and that required inspections are completed.

B. Do not add water to concrete during delivery, at Project site, or during placement unless approved by Architect.

C. Before test sampling and placing concrete, water may be added at Project site, subject to limitations of ACI 301 (ACI 301M).

1. Do not add water to concrete after adding high-range water-reducing admixtures to mixture.

D. Deposit concrete continuously in one layer or in horizontal layers of such thickness that no new concrete is placed on concrete that has hardened enough to cause seams or planes of weakness. If a section cannot be placed continuously, provide construction joints as indicated. Deposit concrete to avoid segregation.

1. Deposit concrete in horizontal layers of depth not to exceed formwork design pressures and in a manner to avoid inclined construction joints.
2. Consolidate placed concrete with mechanical vibrating equipment according to ACI 301 (ACI 301M).
3. Do not use vibrators to transport concrete inside forms. Insert and withdraw vibrators vertically at uniformly spaced locations to rapidly penetrate placed layer and at least 6 inches (150 mm) into preceding layer. Do not insert vibrators into lower layers of concrete that have begun to lose plasticity. At each insertion, limit duration of vibration to time necessary to consolidate concrete and complete embedment of reinforcement and other embedded items without causing mixture constituents to segregate.

E. Deposit and consolidate concrete for floors and slabs in a continuous operation, within limits of construction joints, until placement of a panel or section is complete.

1. Consolidate concrete during placement operations, so concrete is thoroughly worked around reinforcement and other embedded items and into corners.
2. Maintain reinforcement in position on chairs during concrete placement.
3. Screed slab surfaces with a straightedge and strike off to correct elevations.
4. Slope surfaces uniformly to drains where required.
5. Begin initial floating using bull floats or darbies to form a uniform and open-textured surface plane, before excess bleedwater appears on the surface. Do not further disturb slab surfaces before starting finishing operations.

NOT FOR BIDDING

3.9 FINISHING FORMED SURFACES

A. Rough-Formed Finish: As-cast concrete texture imparted by form-facing material with tie holes and defects repaired and patched. Remove fins and other projections that exceed specified limits on formed-surface irregularities.

1. Apply to concrete surfaces not exposed to public view.

B. Rubbed Finish: Apply the following to smooth-formed-finished as-cast concrete where indicated:

1. Smooth-Rubbed Finish: Not later than one day after form removal, moisten concrete surfaces and rub with carborundum brick or another abrasive until producing a uniform color and texture. Do not apply cement grout other than that created by the rubbing process.
2. Grout-Cleaned Finish: Wet concrete surfaces and apply grout of a consistency of thick paint to coat surfaces and fill small holes. Mix 1 part portland cement to 1-1/2 parts fine sand with a 1:1 mixture of bonding admixture and water. Add white portland cement in amounts determined by trial patches, so color of dry grout matches adjacent surfaces. Scrub grout into voids and remove excess grout. When grout whitens, rub surface with clean burlap and keep surface damp by fog spray for at least 36 hours.
3. Cork-Floated Finish: Wet concrete surfaces and apply a stiff grout. Mix 1 part portland cement and 1 part fine sand with a 1:1 mixture of bonding agent and water. Add white portland cement in amounts determined by trial patches, so color of dry grout matches adjacent surfaces. Compress grout into voids by grinding surface. In a swirling motion, finish surface with a cork float.

C. Related Unformed Surfaces: At tops of walls, horizontal offsets, and similar unformed surfaces adjacent to formed surfaces, strike off smooth and finish with a texture matching adjacent formed surfaces. Continue finish surface treatment of formed surfaces uniformly across adjacent unformed surfaces unless otherwise indicated.

3.10 FINISHING FLOORS AND SLABS

A. General: Comply with ACI 302.1R recommendations for screeding, restraightening, and finishing operations for concrete surfaces. Do not wet concrete surfaces.

B. Trowel Finish: After applying float finish, apply first troweling and consolidate concrete by hand or power-driven trowel. Continue troweling passes and restraighten until surface is free of trowel marks and uniform in texture and appearance. Grind smooth any surface defects that would telegraph through applied coatings or floor coverings.

1. Apply a trowel finish to surfaces indicated.

2. Finish and measure surface, so gap at any point between concrete surface and an unleveled, freestanding, 10-ft.- (3.05-m-) long straightedge resting on two high spots and placed anywhere on the surface does not exceed 3/16 inch (4.8 mm).

C. Broom Finish: Apply a broom finish to exterior concrete platforms, steps, ramps, and elsewhere as indicated.

NOT FOR BIDDING

1. Immediately after float finishing, slightly roughen trafficked surface by brooming with fiber-bristle broom perpendicular to main traffic route. Coordinate required final finish with Architect before application.

3.11 MISCELLANEOUS CONCRETE ITEM INSTALLATION

A. Filling In: Fill in holes and openings left in concrete structures after work of other trades is in place unless otherwise indicated. Mix, place, and cure concrete, as specified, to blend with in-place construction. Provide other miscellaneous concrete filling indicated or required to complete the Work.

B. Curbs: Provide monolithic finish to interior curbs by stripping forms while concrete is still green and by steel-troweling surfaces to a hard, dense finish with corners, intersections, and terminations slightly rounded.

C. Equipment Bases and Foundations:

1. Coordinate sizes and locations of concrete bases with actual equipment provided.
2. Construct concrete bases 4 inches (100 mm) high unless otherwise indicated, and extend base not less than 6 inches (150 mm) in each direction beyond the maximum dimensions of supported equipment unless otherwise indicated or unless required for seismic anchor support.
3. Minimum Compressive Strength: 3000 psi (20.7 MPa) at 28 days.
4. Install dowel rods to connect concrete base to concrete floor. Unless otherwise indicated, install dowel rods on 18-inch (450-mm) centers around the full perimeter of concrete base.
5. For supported equipment, install epoxy-coated anchor bolts that extend through concrete base and anchor into structural concrete substrate.
6. Prior to pouring concrete, place and secure anchorage devices. Use setting drawings, templates, diagrams, instructions and directions furnished with items to be embedded.
7. Cast anchor-bolt inserts into bases. Install anchor bolts to elevations required for proper attachment to supported equipment.

3.12 CONCRETE PROTECTING AND CURING

A. General: Protect freshly placed concrete from premature drying and excessive cold or hot temperatures. Comply with ACI 306.1 for cold-weather protection and ACI 301 (ACI 301M) for hot-weather protection during curing.

B. Evaporation Retarder: Apply evaporation retarder to unformed concrete surfaces if hot, dry, or windy conditions cause moisture loss approaching 0.2 lb/sq. ft. x h (1 kg/sq. m x h) before and during finishing operations. Apply according to manufacturer's written instructions after placing, screeding, and bull floating or darbying concrete, but before float finishing.

C. Formed Surfaces: Cure formed concrete surfaces, including underside of beams, supported slabs, and other similar surfaces. If forms remain during curing period, moist cure after loosening forms. If removing forms before end of curing period, continue curing for remainder of curing period.

NOT FOR BIDDING

D. Unformed Surfaces: Begin curing immediately after finishing concrete. Cure unformed surfaces, including floors and slabs, concrete floor toppings, and other surfaces.

E. Cure concrete according to ACI 308.1, by one or a combination of the following methods:

1. Moisture-Retaining-Cover Curing: Cover concrete surfaces with moisture-retaining cover for curing concrete, placed in widest practicable width, with sides and ends lapped at least 12 inches (300 mm), and sealed by waterproof tape or adhesive. Cure for not less than seven days. Immediately repair any holes or tears during curing period, using cover material and waterproof tape.

a. Moisture cure or use moisture-retaining covers to cure concrete surfaces to receive floor coverings.
b. Moisture cure or use moisture-retaining covers to cure concrete surfaces to receive penetrating liquid floor treatments.
c. Cure concrete surfaces to receive floor coverings with either a moisture-retaining cover or a curing compound that the manufacturer certifies does not interfere with bonding of floor covering used on Project.

3.13 JOINT FILLING

A. Prepare, clean, and install joint filler according to manufacturer's written instructions.

1. Defer joint filling until concrete has aged at least one month(s). Do not fill joints until construction traffic has permanently ceased.

B. Remove dirt, debris, saw cutting, curing compounds, and sealers from joints; leave contact faces of joints clean and dry.

C. Install semirigid joint filler full depth in saw-cut joints and at least 2 inches (50 mm) deep in formed joints. Overfill joint and trim joint filler flush with top of joint after hardening.

3.14 CONCRETE SURFACE REPAIRS

A. Defective Concrete: Repair and patch defective areas when approved by Architect. Remove and replace concrete that cannot be repaired and patched to Architect's approval.

B. Patching Mortar: Mix dry pack patching mortar, consisting of 1 part portland cement to 2-1/2 parts fine aggregate passing a No. 16 (1.18-mm) sieve, using only enough water for handling and placing.

C. Repairing Formed Surfaces: Surface defects include color and texture irregularities, cracks, spalls, air bubbles, honeycombs, rock pockets, fins and other projections on the surface, and stains and other discolorations that cannot be removed by cleaning.

1. Immediately after form removal, cut out honeycombs, rock pockets, and voids more than 1/2 inch (13 mm) in any dimension to solid concrete. Limit cut depth to 3/4 inch (19 mm). Make edges of cuts perpendicular to concrete surface. Clean, dampen with water, and brush-coat holes and voids with bonding agent. Fill and compact with patching

NOT FOR BIDDING

mortar before bonding agent has dried. Fill form-tie voids with patching mortar or cone plugs secured in place with bonding agent.

2. Repair defects on surfaces exposed to view by blending white portland cement and standard portland cement so that, when dry, patching mortar matches surrounding color. Patch a test area at inconspicuous locations to verify mixture and color match before proceeding with patching. Compact mortar in place and strike off slightly higher than surrounding surface.
3. Repair defects on concealed formed surfaces that affect concrete's durability and structural performance as determined by Architect.

D. Repairing Unformed Surfaces: Test unformed surfaces, such as floors and slabs, for finish and verify surface tolerances specified for each surface. Correct low and high areas. Test surfaces sloped to drain for trueness of slope and smoothness; use a sloped template.

1. Repair finished surfaces containing defects. Surface defects include spalls, popouts, honeycombs, rock pockets, crazing and cracks in excess of 0.01 inch (0.25 mm) wide or that penetrate to reinforcement or completely through unreinforced sections regardless of width, and other objectionable conditions.
2. After concrete has cured at least 14 days, correct high areas by grinding.
3. Correct localized low areas during or immediately after completing surface finishing operations by cutting out low areas and replacing with patching mortar. Finish repaired areas to blend into adjacent concrete.
4. Correct other low areas scheduled to receive floor coverings with a repair underlayment. Prepare, mix, and apply repair underlayment and primer according to manufacturer's written instructions to produce a smooth, uniform, plane, and level surface. Feather edges to match adjacent floor elevations.
5. Correct other low areas scheduled to remain exposed with a repair topping. Cut out low areas to ensure a minimum repair topping depth of 1/4 inch (6 mm) to match adjacent floor elevations. Prepare, mix, and apply repair topping and primer according to manufacturer's written instructions to produce a smooth, uniform, plane, and level surface.
6. Repair defective areas, except random cracks and single holes 1 inch (25 mm) or less in diameter, by cutting out and replacing with fresh concrete. Remove defective areas with clean, square cuts and expose steel reinforcement with at least a 3/4-inch (19-mm) clearance all around. Dampen concrete surfaces in contact with patching concrete and apply bonding agent. Mix patching concrete of same materials and mixture as original concrete, except without coarse aggregate. Place, compact, and finish to blend with adjacent finished concrete. Cure in same manner as adjacent concrete.
7. Repair random cracks and single holes 1 inch (25 mm) or less in diameter with patching mortar. Groove top of cracks and cut out holes to sound concrete and clean off dust, dirt, and loose particles. Dampen cleaned concrete surfaces and apply bonding agent. Place patching mortar before bonding agent has dried. Compact patching mortar and finish to match adjacent concrete. Keep patched area continuously moist for at least 72 hours.

E. Perform structural repairs of concrete, subject to Architect's approval, using epoxy adhesive and patching mortar.

F. Repair materials and installation not specified above may be used, subject to Architect's approval.

NOT FOR BIDDING

3.15 FIELD QUALITY CONTROL

A. Special Inspections: Engage a special inspector and qualified testing and inspecting agency to perform field tests and inspections and prepare test reports.

B. Testing Agency: Engage a qualified testing and inspecting agency to perform tests and inspections and to submit reports.

C. Inspections:

1. Steel reinforcement placement.
2. Steel reinforcement welding.
3. Headed bolts and studs.
4. Verification of use of required design mixture.
5. Concrete placement, including conveying and depositing.
6. Curing procedures and maintenance of curing temperature.
7. Verification of concrete strength before removal of shores and forms from beams and slabs.

D. Concrete Tests: Testing of composite samples of fresh concrete obtained according to ASTM C 172/C 172M shall be performed according to the following requirements:

1. Testing Frequency: Obtain one composite sample for each day's pour of each concrete mixture exceeding 5 cu. yd. (4 cu. m), but less than 25 cu. yd. (19 cu. m), plus one set for each additional 50 cu. yd. (38 cu. m) or fraction thereof.
2. Testing Frequency: Obtain at least one composite sample for each 100 cu. yd. (76 cu. m) or fraction thereof of each concrete mixture placed each day.

   a. When frequency of testing provides fewer than five compressive-strength tests for each concrete mixture, testing shall be conducted from at least five randomly selected batches or from each batch if fewer than five are used.

3. Slump: ASTM C 143/C 143M, one test at point of placement for each composite sample, but not less than one test for each day's pour of each concrete mixture. Perform additional tests when concrete consistency appears to change.
4. Air Content: ASTM C 231/C 231M, pressure method, for normal-weight concrete;one test for each composite sample, but not less than one test for each day's pour of each concrete mixture.
5. Concrete Temperature: ASTM C 1064/C 1064M; one test hourly when air temperature is 40 deg F (4.4 deg C) and below or 80 deg F (27 deg C) and above, and one test for each composite sample.
6. Unit Weight: ASTM C 567/C 567M, fresh unit weight of structural lightweight concrete; one test for each composite sample, but not less than one test for each day's pour of each concrete mixture.
7. Compression Test Specimens: ASTM C 31/C 31M.

   a. Cast and laboratory cure two sets of two standard cylinder specimens for each composite sample.
   b. Cast and field cure two sets of two standard cylinder specimens for each composite sample.

NOT FOR BIDDING

8. Compressive-Strength Tests: ASTM C 39/C 39M; test one set of two laboratory-cured specimens at 7 days and one set of two specimens at 28 days.

    a. Test one set of two field-cured specimens at 7 days and one set of two specimens at 28 days.
    b. A compressive-strength test shall be the average compressive strength from a set of two specimens obtained from same composite sample and tested at age indicated.

9. When strength of field-cured cylinders is less than 85 percent of companion laboratory-cured cylinders, Contractor shall evaluate operations and provide corrective procedures for protecting and curing in-place concrete.
10. Strength of each concrete mixture will be satisfactory if every average of any three consecutive compressive-strength tests equals or exceeds specified compressive strength and no compressive-strength test value falls below specified compressive strength by more than 500 psi (3.4 MPa).
11. Test results shall be reported in writing to Architect, concrete manufacturer, and Contractor within 48 hours of testing. Reports of compressive-strength tests shall contain Project identification name and number, date of concrete placement, name of concrete testing and inspecting agency, location of concrete batch in Work, design compressive strength at 28 days, concrete mixture proportions and materials, compressive breaking strength, and type of break for both 7- and 28-day tests.
12. Nondestructive Testing: Impact hammer, sonoscope, or other nondestructive device may be permitted by Architect but will not be used as sole basis for approval or rejection of concrete.
13. Additional Tests: Testing and inspecting agency shall make additional tests of concrete when test results indicate that slump, air entrainment, compressive strengths, or other requirements have not been met, as directed by Architect. Testing and inspecting agency may conduct tests to determine adequacy of concrete by cored cylinders complying with ASTM C 42/C 42M or by other methods as directed by Architect.
14. Additional testing and inspecting, at Contractor's expense, will be performed to determine compliance of replaced or additional work with specified requirements.
15. Correct deficiencies in the Work that test reports and inspections indicate do not comply with the Contract Documents.

END OF SECTION 033000

NOT FOR BIDDING

SECTION 042000 - UNIT MASONRY

PART 1 - GENERAL

1.1 RELATED DOCUMENTS

A. Drawings and general provisions of the Contract, including General and Supplementary Conditions and Division 01 Specification Sections, apply to this Section.

1.2 SUMMARY

A. Section Includes:

1. Concrete masonry units.
2. Pre-faced concrete masonry units.
3. Mortar and grout.
4. Steel reinforcing bars.
5. Masonry-joint reinforcement.
6. Ties and anchors.
7. Miscellaneous masonry accessories.

B. Products Installed but not Furnished under This Section:

1. Cast-stone trim in unit masonry.
2. Steel lintels in unit masonry.
3. Steel shelf angles for supporting unit masonry.

C. Related Requirements:

1. Section 033000 "Cast-in-Place Concrete" for installing dovetail slots for masonry anchors.
2. Section 044300 "Stone Masonry" for stone trim secured with stone anchors.
3. Section 072100 "Thermal Insulation" for cavity wall insulation.
4. Section 076200 "Sheet Metal Flashing and Trim" for [**exposed**] sheet metal flashing and for furnishing manufactured reglets installed in masonry joints.
5. Section 321400 "Unit Paving" for exterior unit masonry paving.

1.3 DEFINITIONS

A. CMU(s): Concrete masonry unit(s).

B. Reinforced Masonry: Masonry containing reinforcing steel in grouted cells.

1.4 PREINSTALLATION MEETINGS

A. Preinstallation Conference: Conduct conference at Project site.

NOT FOR BIDDING

1.5 ACTION SUBMITTALS

A. Product Data: For each type of product.

B. Shop Drawings: For the following:

1. Masonry Units: Show sizes, profiles, coursing, and locations of special shapes.
2. Stone Trim Units: Show sizes, profiles, and locations of each stone trim unit required.
3. Reinforcing Steel: Detail bending, lap lengths, and placement of unit masonry reinforcing bars. Comply with ACI 315.

C. Samples for Initial Selection:

1. Pre-faced CMUs.
2. Colored mortar.

D. Samples for Verification: For each type and color of the following:

1. Pre-faced CMUs.
2. Accessories embedded in masonry.

1.6 INFORMATIONAL SUBMITTALS

A. Qualification Data: For testing agency.

B. Material Certificates: For each type and size of the following:

1. Masonry units.

   a. Include material test reports substantiating compliance with requirements.
   b. For masonry units used in structural masonry, include data and calculations establishing average net area compressive strength of units.

2. Integral water repellant used in CMUs.
3. Cementitious materials. Include name of manufacturer, brand name, and type.
4. Mortar admixtures.
5. Preblended, dry mortar mixes. Include description of type and proportions of ingredients.
6. Grout mixes. Include description of type and proportions of ingredients.
7. Reinforcing bars.
8. Joint reinforcement.
9. Anchors, ties, and metal accessories.

C. Mix Designs: For each type of mortar and grout. Include description of type and proportions of ingredients.

1. Include test reports for mortar mixes required to comply with property specification. Test according to ASTM C 109/C 109M for compressive strength, ASTM C 1506 for water retention, and ASTM C 91/C 91M for air content.
2. Include test reports, according to ASTM C 1019, for grout mixes required to comply with compressive strength requirement.

NOT FOR BIDDING

D. Statement of Compressive Strength of Masonry: For each combination of masonry unit type and mortar type, provide statement of average net-area compressive strength of masonry units, mortar type, and resulting net-area compressive strength of masonry determined according to TMS 602/ACI 530.1/ASCE 6.

E. Cold-Weather and Hot-Weather Procedures: Detailed description of methods, materials, and equipment to be used to comply with requirements.

1.7 QUALITY ASSURANCE

A. Testing Agency Qualifications: Qualified according to ASTM C 1093 for testing indicated.

1.8 DELIVERY, STORAGE, AND HANDLING

A. Store masonry units on elevated platforms in a dry location. If units are not stored in an enclosed location, cover tops and sides of stacks with waterproof sheeting, securely tied. If units become wet, do not install until they are dry.

B. Store cementitious materials on elevated platforms, under cover, and in a dry location. Do not use cementitious materials that have become damp.

C. Store aggregates where grading and other required characteristics can be maintained and contamination avoided.

D. Deliver preblended, dry mortar mix in moisture-resistant containers. Store preblended, dry mortar mix in delivery containers on elevated platforms in a dry location or in covered weatherproof dispensing silos.

E. Store masonry accessories, including metal items, to prevent corrosion and accumulation of dirt and oil.

1.9 FIELD CONDITIONS

A. Protection of Masonry: During construction, cover tops of walls, projections, and sills with waterproof sheeting at end of each day's work. Cover partially completed masonry when construction is not in progress.

1. Extend cover a minimum of 24 inches (600 mm) down both sides of walls, and hold cover securely in place.
2. When one wythe of multiwythe masonry walls is completed in advance of other wythes, secure cover a minimum of 24 inches (600 mm) down face next to unconstructed wythe, and hold cover in place.

B. Do not apply uniform floor or roof loads for at least 12 hours and concentrated loads for at least three days after building masonry walls or columns.

C. Stain Prevention: Prevent grout, mortar, and soil from staining the face of masonry to be left exposed or painted. Immediately remove grout, mortar, and soil that come in contact with such masonry.

NOT FOR BIDDING

1. Protect base of walls from rain-splashed mud and from mortar splatter by spreading coverings on ground and over wall surface.
2. Protect sills, ledges, and projections from mortar droppings.
3. Protect surfaces of window and door frames, as well as similar products with painted and integral finishes, from mortar droppings.
4. Turn scaffold boards near the wall on edge at the end of each day to prevent rain from splashing mortar and dirt onto completed masonry.

D. Cold-Weather Requirements: Do not use frozen materials or materials mixed or coated with ice or frost. Do not build on frozen substrates. Remove and replace unit masonry damaged by frost or by freezing conditions. Comply with cold-weather construction requirements contained in TMS 602/ACI 530.1/ASCE 6.

1. Cold-Weather Cleaning: Use liquid cleaning methods only when air temperature is 40 deg F (4 deg C) and higher and will remain so until masonry has dried, but not less than seven days after completing cleaning.

E. Hot-Weather Requirements: Comply with hot-weather construction requirements contained in TMS 602/ACI 530.1/ASCE 6.

PART 2 - PRODUCTS

2.1 MANUFACTURERS

A. Source Limitations for Masonry Units: Obtain exposed masonry units of a uniform texture and color, or a uniform blend within the ranges accepted for these characteristics, from single source from single manufacturer for each product required.

B. Source Limitations for Mortar Materials: Obtain mortar ingredients of a uniform quality, including color for exposed masonry, from single manufacturer for each cementitious component and from single source or producer for each aggregate.

2.2 PERFORMANCE REQUIREMENTS

A. Provide structural unit masonry that develops indicated net-area compressive strengths at 28 days.

1. Determine net-area compressive strength of masonry from average net-area compressive strengths of masonry units and mortar types (unit-strength method) according to TMS 602/ACI 530.1/ASCE 6.
2. Determine net-area compressive strength of masonry by testing masonry prisms according to ASTM C 1314.

2.3 UNIT MASONRY, GENERAL

A. Masonry Standard: Comply with TMS 602/ACI 530.1/ASCE 6, except as modified by requirements in the Contract Documents.

NOT FOR BIDDING

B. Defective Units: Referenced masonry unit standards may allow a certain percentage of units to contain chips, cracks, or other defects exceeding limits stated. Do not use units where such defects are exposed in the completed Work.

C. Fire-Resistance Ratings: Comply with requirements for fire-resistance-rated assembly designs indicated.

1. Where fire-resistance-rated construction is indicated, units shall be listed and labeled by a qualified testing agency acceptable to authorities having jurisdiction.

2.4 CONCRETE MASONRY UNITS

A. Shapes: Provide shapes indicated and as follows, with exposed surfaces matching exposed faces of adjacent units unless otherwise indicated.

1. Provide special shapes for lintels, corners, jambs, sills, movement joints, headers, bonding, and other special conditions.
2. Provide square-edged units for outside corners unless otherwise indicated.

B. Integral Water Repellent: Provide units made with integral water repellent for exposed units.

1. Integral Water Repellent: Liquid polymeric, integral water-repellent admixture that does not reduce flexural bond strength. Units made with integral water repellent, when tested according to ASTM E 514/E 514M as a wall assembly made with mortar containing integral water-repellent manufacturer's mortar additive, with test period extended to 24 hours, shall show no visible water or leaks on the back of test specimen.

a. Manufacturers: Subject to compliance with requirements, available manufacturers offering products that may be incorporated into the Work include, but are not limited to the following:

1) ACM Chemistries.
2) BASF Corporation; Construction Systems.
3) Grace Construction Products; W.R. Grace & Co. -- Conn.

C. CMUs: ASTM C 90.

1. Unit Compressive Strength: Provide units with minimum average net-area compressive strength of 1900 psi.
2. Density Classification: Normal weight.
3. Size (Width): Manufactured to dimensions 3/8 inch (10 mm) less than nominal dimensions.
4. Exposed Faces: Provide color and texture matching the range represented by Architect's samples.
5. Faces To Receive Plaster: Where units are indicated to receive a direct application of plaster, provide textured-face units made with gap-graded aggregates.

D. Pre-faced CMUs: Normal weight glazed hollow concrete units complying with ASTM C 90, with manufacturer's standard smooth resinous facing complying with ASTM C 744.

NOT FOR BIDDING

1. Manufacturers: Subject to compliance with requirements, available manufacturers offering products that may be incorporated into the Work include, but are not limited to the following:

   a. Trenwyth Astra-Glaze
   b. Clayton Spectra-Glaze.
   c. Elgin-Butler Brick Company

2. Unit Compressive Strength: Provide units with minimum average net-area compressive strength of 2150 psi (14.8 MPa).
3. Size: Manufactured to dimensions specified in "CMUs" Paragraph but with pre-faced surfaces having 1/16-inch- (1.5-mm-) wide returns of facing to create 1/4-inch- (6.5-mm-) wide mortar joints with modular coursing.
4. Colors and Patterns: As selected by Architect from manufacturer's full range. Pattern shall be equal to Trenwyth “DA1”, with an 8” x 8” nominal score pattern.

2.5 CONCRETE AND MASONRY LINTELS

A. General: Provide one of the following:

B. Concrete Lintels: ASTM C 1623, matching CMUs in color, texture, and density classification; and with reinforcing bars indicated. Provide lintels with net-area compressive strength not less than that of CMUs.

C. Concrete Lintels: Precast or formed-in-place concrete lintels complying with requirements in Section 033000 "Cast-in-Place Concrete," and with reinforcing bars indicated.

D. Masonry Lintels: Prefabricated or built-in-place masonry lintels made from bond beam CMUs matching adjacent CMUs in color, texture, and density classification, with reinforcing bars placed as indicated and filled with coarse grout. Cure precast lintels before handling and installing. Temporarily support built-in-place lintels until cured.

2.6 MORTAR AND GROUT MATERIALS

A. Portland Cement: ASTM C 150/C 150M, Type I or II, except Type III may be used for cold-weather construction. Provide natural color or white cement as required to produce mortar color indicated.

   1. Alkali content shall not be more than 0.1 percent when tested according to ASTM C 114.

B. Hydrated Lime: ASTM C 207, Type S.

C. Portland Cement-Lime Mix: Packaged blend of portland cement and hydrated lime containing no other ingredients.

D. Aggregate for Mortar: ASTM C 144.

   1. For mortar that is exposed to view, use washed aggregate consisting of natural sand or crushed stone.

NOT FOR BIDDING

2. For joints less than 1/4 inch (6 mm) thick, use aggregate graded with 100 percent passing the No. 16 (1.18-mm) sieve.
3. White-Mortar Aggregates: Natural white sand or crushed white stone.
4. Colored-Mortar Aggregates: Natural sand or crushed stone of color necessary to produce required mortar color.

E. Aggregate for Grout: ASTM C 404.

F. Cold-Weather Admixture: Nonchloride, noncorrosive, accelerating admixture complying with ASTM C 494/C 494M, Type C, and recommended by manufacturer for use in masonry mortar of composition indicated.

G. Water-Repellent Admixture: Liquid water-repellent mortar admixture intended for use with CMUs containing integral water repellent from same manufacturer.

1. Manufacturers: Subject to compliance with requirements, available manufacturers offering products that may be incorporated into the work include, but are not limited to the following:

a. ACM Chemistries.
b. BASF Corporation; Construction Systems.
c. Euclid Chemical Company (The), an RPM company.
d. Grace Construction Products; W.R. Grace & Co. -- Conn.

H. Water: Potable.

2.7 REINFORCEMENT

A. Uncoated-Steel Reinforcing Bars: ASTM A 615/A 615M or ASTM A 996/A 996M, Grade 60 (Grade 420).

B. Reinforcing Bar Positioners: Wire units designed to fit into mortar bed joints spanning masonry unit cells and to hold reinforcing bars in center of cells. Units are formed from 0.148-inch (3.77-mm) steel wire, hot-dip galvanized after fabrication. Provide units designed for number of bars indicated.

C. Masonry-Joint Reinforcement, General: ASTM A 951/A 951M.

1. Interior Walls: Hot-dip galvanized carbon steel.
2. Exterior Walls: Hot-dip galvanized carbon steel.
3. Wire Size for Side Rods: 0.148-inch (3.77-mm) diameter.
4. Wire Size for Cross Rods: 0.148-inch (3.77-mm) diameter.
5. Wire Size for Veneer Ties: 0.148-inch (3.77-mm) diameter.
6. Spacing of Cross Rods, Tabs, and Cross Ties: Not more than 16 inches (407 mm) o.c.
7. Provide in lengths of not less than 10 feet (3 m).

D. Masonry-Joint Reinforcement for Single-Wythe Masonry: Ladder type with single pair of side rods.

NOT FOR BIDDING

2.8 TIES AND ANCHORS

A. General: Ties and anchors shall extend at least 1-1/2 inches (38 mm) into veneer but with at least a 5/8-inch (16-mm) cover on outside face.

B. Materials: Provide ties and anchors specified in this article that are made from materials that comply with the following unless otherwise indicated:
   1. Hot-Dip Galvanized, Carbon-Steel Wire: ASTM A 82/A 82M, with ASTM A 153/A 153M, Class B-2 coating.

2.9 MISCELLANEOUS MASONRY ACCESSORIES

A. Compressible Filler: Premolded filler strips complying with ASTM D 1056, Grade 2A1; compressible up to 35 percent; of width and thickness indicated; formulated from neoprene, urethane or PVC.

B. Preformed Control-Joint Gaskets: Made from styrene-butadiene-rubber compound, complying with ASTM D 2000, Designation M2AA-805 or PVC, complying with ASTM D 2287, Type PVC-65406 and designed to fit standard sash block and to maintain lateral stability in masonry wall; size and configuration as indicated.

C. Bond-Breaker Strips: Asphalt-saturated felt complying with ASTM D 226/D 226M, Type I (No. 15 asphalt felt).

2.10 MASONRY CLEANERS

A. Proprietary Acidic Cleaner: Manufacturer's standard-strength cleaner designed for removing mortar/grout stains, efflorescence, and other new construction stains from new masonry without discoloring or damaging masonry surfaces. Use product expressly approved for intended use by cleaner manufacturer and manufacturer of masonry units being cleaned.

   1. Manufacturers: Subject to compliance with requirements, available manufacturers offering products that may be incorporated into the Work include, but are not limited to the following:

      a. Diedrich Technologies, Inc.; a division of Sandell Construction Solutions.
      b. EaCo Chem, Inc.
      c. PROSOCO, Inc.

2.11 MORTAR AND GROUT MIXES

A. General: Do not use admixtures, including pigments, air-entraining agents, accelerators, retarders, water-repellent agents, antifreeze compounds, or other admixtures unless otherwise indicated.

   1. Do not use calcium chloride in mortar or grout.
   2. Use portland cement-lime mortar unless otherwise indicated.
   3. Add cold-weather admixture (if used) at same rate for all mortar that will be exposed to view, regardless of weather conditions, to ensure that mortar color is consistent.

NOT FOR BIDDING

B. Preblended, Dry Mortar Mix: Furnish dry mortar ingredients in form of a preblended mix. Measure quantities by weight to ensure accurate proportions, and thoroughly blend ingredients before delivering to Project site.

C. Mortar for Unit Masonry: Comply with ASTM C 270, Proportion Property Specification. Provide the following types of mortar for applications stated unless another type is indicated or needed to provide required compressive strength of masonry.

1. For masonry below grade or in contact with earth, use Type M.
2. For reinforced masonry, use Type M.
3. For exterior, above-grade, load-bearing and nonload-bearing walls and parapet walls; for interior load-bearing walls; for interior nonload-bearing partitions; and for other applications where another type is not indicated, use Type S.
4. For interior nonload-bearing partitions, Type O may be used instead of Type N.

D. Grout for Unit Masonry: Comply with ASTM C 476.

1. Use grout of type indicated or, if not otherwise indicated, of type (fine or coarse) that will comply with TMS 602/ACI 530.1/ASCE 6 for dimensions of grout spaces and pour height.
2. Proportion grout in accordance with ASTM C 476, Table 1 or paragraph 4.2.2 for specified 28-day compressive strength indicated, but not less than 2000 psi (14 MPa).
3. Provide grout with a slump of 8 to 11 inches (200 to 280 mm) as measured according to ASTM C 143/C 143M.

PART 3 - EXECUTION

3.1 EXAMINATION

A. Examine conditions, with Installer present, for compliance with requirements for installation tolerances and other conditions affecting performance of the Work.

1. For the record, prepare written report, endorsed by Installer, listing conditions detrimental to performance of the Work.
2. Verify that foundations are within tolerances specified.
3. Verify that reinforcing dowels are properly placed.
4. Verify that substrates are free of substances that impair mortar bond.

B. Before installation, examine rough-in and built-in construction for piping systems to verify actual locations of piping connections.

C. Proceed with installation only after unsatisfactory conditions have been corrected.

3.2 INSTALLATION, GENERAL

A. Thickness: Build cavity and composite walls and other masonry construction to full thickness shown. Build single-wythe walls to actual widths of masonry units, using units of widths indicated.

NOT FOR BIDDING

B. Build chases and recesses to accommodate items specified in this and other Sections.

C. Leave openings for equipment to be installed before completing masonry. After installing equipment, complete masonry to match construction immediately adjacent to opening.

D. Use full-size units without cutting if possible. If cutting is required to provide a continuous pattern or to fit adjoining construction, cut units with motor-driven saws; provide clean, sharp, unchipped edges. Allow units to dry before laying unless wetting of units is specified. Install cut units with cut surfaces and, where possible, cut edges concealed.

E. Select and arrange units for exposed unit masonry to produce a uniform blend of colors and textures. Mix units from several pallets or cubes as they are placed.

F. Matching Existing Masonry: Match coursing, bonding, color, and texture of existing masonry.

3.3 TOLERANCES

A. Dimensions and Locations of Elements:

1. For dimensions in cross section or elevation, do not vary by more than plus 1/2 inch (12 mm) or minus 1/4 inch (6 mm).
2. For location of elements in plan, do not vary from that indicated by more than plus or minus 1/2 inch (12 mm).
3. For location of elements in elevation, do not vary from that indicated by more than plus or minus 1/4 inch (6 mm) in a story height or 1/2 inch (12 mm) total.

B. Lines and Levels:

1. For bed joints and top surfaces of bearing walls, do not vary from level by more than 1/4 inch in 10 feet (6 mm in 3 m), or 1/2-inch (12-mm) maximum.
2. For conspicuous horizontal lines, such as lintels, sills, parapets, and reveals, do not vary from level by more than 1/8 inch in 10 feet (3 mm in 3 m), 1/4 inch in 20 feet (6 mm in 6 m), or 1/2-inch (12-mm) maximum.
3. For vertical lines and surfaces, do not vary from plumb by more than 1/4 inch in 10 feet (6 mm in 3 m), 3/8 inch in 20 feet (9 mm in 6 m), or 1/2-inch (12-mm) maximum.
4. For conspicuous vertical lines, such as external corners, door jambs, reveals, and expansion and control joints, do not vary from plumb by more than 1/8 inch in 10 feet (3 mm in 3 m), 1/4 inch in 20 feet (6 mm in 6 m), or 1/2-inch (12-mm) maximum.
5. For lines and surfaces, do not vary from straight by more than 1/4 inch in 10 feet (6 mm in 3 m), 3/8 inch in 20 feet (9 mm in 6 m), or 1/2-inch (12-mm) maximum.
6. For vertical alignment of exposed head joints, do not vary from plumb by more than 1/4 inch in 10 feet (6 mm in 3 m),) or 1/2-inch (12-mm) maximum.
7. For faces of adjacent exposed masonry units, do not vary from flush alignment by more than 1/16 inch (1.5 mm) except due to warpage of masonry units within tolerances specified for warpage of units.

C. Joints:

1. For bed joints, do not vary from thickness indicated by more than plus or minus 1/8 inch (3 mm), with a maximum thickness limited to 1/2 inch (12 mm).

NOT FOR BIDDING

2. For exposed bed joints, do not vary from bed-joint thickness of adjacent courses by more than 1/8 inch (3 mm).
3. For head and collar joints, do not vary from thickness indicated by more than plus 3/8 inch (9 mm) or minus 1/4 inch (6 mm).
4. For exposed head joints, do not vary from thickness indicated by more than plus or minus 1/8 inch (3 mm).
5. For exposed bed joints and head joints of stacked bond, do not vary from a straight line by more than 1/16 inch (1.5 mm) from one masonry unit to the next.

3.4 LAYING MASONRY WALLS

A. Lay out walls in advance for accurate spacing of surface bond patterns with uniform joint thicknesses and for accurate location of openings, movement-type joints, returns, and offsets. Avoid using less-than-half-size units, particularly at corners, jambs, and, where possible, at other locations.

B. Bond Pattern for Exposed Masonry: Unless otherwise indicated, lay exposed masonry in running bond; do not use units with less-than-nominal 4-inch (100-mm) horizontal face dimensions at corners or jambs.

C. Stopping and Resuming Work: Stop work by stepping back units in each course from those in course below; do not tooth. When resuming work, clean masonry surfaces that are to receive mortar, remove loose masonry units and mortar, and wet brick if required before laying fresh masonry.

D. Built-in Work: As construction progresses, build in items specified in this and other Sections. Fill in solidly with masonry around built-in items.

E. Fill space between steel frames and masonry solidly with mortar unless otherwise indicated.

F. Where built-in items are to be embedded in cores of hollow masonry units, place a layer of metal lath, wire mesh, or plastic mesh in the joint below, and rod mortar or grout into core.

G. Fill cores in hollow CMUs with grout 24 inches (600 mm) under bearing plates, beams, lintels, posts, and similar items unless otherwise indicated.

H. Build nonload-bearing interior partitions full height of story to underside of solid floor or roof structure above unless otherwise indicated.

1. Install compressible filler in joint between top of partition and underside of structure above.
2. Fasten partition top anchors to structure above and build into top of partition. Grout cells of CMUs solidly around plastic tubes of anchors and push tubes down into grout to provide 1/2-inch (13-mm) clearance between end of anchor rod and end of tube. Space anchors 48 inches (1200 mm) o.c. unless otherwise indicated.
3. Wedge nonload-bearing partitions against structure above with small pieces of tile, slate, or metal. Fill joint with mortar after dead-load deflection of structure above approaches final position.
4. At fire-rated partitions, treat joint between top of partition and underside of structure above to comply with Section 078443 "Joint Firestopping."

NOT FOR BIDDING

3.5 MORTAR BEDDING AND JOINTING

A. Lay **CMUs** as follows:

1. Bed face shells in mortar and make head joints of depth equal to bed joints.
2. Bed webs in mortar in all courses of piers, columns, and pilasters.
3. Bed webs in mortar in grouted masonry, including starting course on footings.
4. Fully bed entire units, including areas under cells, at starting course on footings where cells are not grouted.
5. Fully bed units and fill cells with mortar at anchors and ties as needed to fully embed anchors and ties in mortar.

B. Tool exposed joints slightly concave when thumbprint hard, using a jointer larger than joint thickness unless otherwise indicated.

1. For glazed masonry units, use a nonmetallic jointer 3/4 inch (19 mm) or more in width.

3.6 MASONRY-JOINT REINFORCEMENT

A. General: Install entire length of longitudinal side rods in mortar with a minimum cover of 5/8 inch (16 mm) on exterior side of walls, 1/2 inch (13 mm) elsewhere. Lap reinforcement a minimum of 6 inches (150 mm).

1. Space reinforcement not more than 16 inches (406 mm) o.c.
2. Space reinforcement not more than 8 inches (203 mm) o.c. in foundation walls and parapet walls.
3. Provide reinforcement not more than 8 inches (203 mm) above and below wall openings and extending 12 inches (305 mm) beyond openings in addition to continuous reinforcement.

B. Interrupt joint reinforcement at control and expansion joints unless otherwise indicated.

C. Provide continuity at wall intersections by using prefabricated T-shaped units.

D. Provide continuity at corners by using prefabricated L-shaped units.

E. Cut and bend reinforcing units as directed by manufacturer for continuity at corners, returns, offsets, column fireproofing, pipe enclosures, and other special conditions.

3.7 CONTROL AND EXPANSION JOINTS

A. General: Install control- and expansion-joint materials in unit masonry as masonry progresses. Do not allow materials to span control and expansion joints without provision to allow for in-plane wall or partition movement.

B. Form control joints in concrete masonry as follows:

1. Fit bond-breaker strips into hollow contour in ends of CMUs on one side of control joint. Fill resultant core with grout, and rake out joints in exposed faces for application of sealant.

NOT FOR BIDDING

2. Install preformed control-joint gaskets designed to fit standard sash block.
3. Install interlocking units designed for control joints. Install bond-breaker strips at joint. Keep head joints free and clear of mortar, or rake out joint for application of sealant.
4. Install temporary foam-plastic filler in head joints, and remove filler when unit masonry is complete for application of sealant.

C. Provide horizontal, pressure-relieving joints by either leaving an airspace or inserting a compressible filler of width required for installing sealant and backer rod specified in Section 079200 "Joint Sealants," but not less than 3/8 inch (10 mm).

1. Locate horizontal, pressure-relieving joints beneath shelf angles supporting masonry.

3.8 LINTELS

A. Install steel lintels where indicated.

B. Provide concrete lintels where shown and where openings of more than 12 inches (305 mm) for brick-size units and 24 inches (610 mm) for block-size units are shown without structural steel or other supporting lintels.

C. Provide minimum bearing of 8 inches (200 mm) at each jamb unless otherwise indicated.

3.9 REINFORCED UNIT MASONRY INSTALLATION

A. Temporary Formwork and Shores: Construct formwork and shores as needed to support reinforced masonry elements during construction.

1. Construct formwork to provide shape, line, and dimensions of completed masonry as indicated. Make forms sufficiently tight to prevent leakage of mortar and grout. Brace, tie, and support forms to maintain position and shape during construction and curing of reinforced masonry.
2. Do not remove forms and shores until reinforced masonry members have hardened sufficiently to carry their own weight and that of other loads that may be placed on them during construction.

B. Placing Reinforcement: Comply with requirements in TMS 602/ACI 530.1/ASCE 6.

C. Grouting: Do not place grout until entire height of masonry to be grouted has attained enough strength to resist grout pressure.

1. Comply with requirements in TMS 602/ACI 530.1/ASCE 6 for cleanouts and for grout placement, including minimum grout space and maximum pour height.
2. Limit height of vertical grout pours to not more than 12.67 ft. (3.86 m).

3.10 FIELD QUALITY CONTROL

A. Testing and Inspecting: Engage special inspectors to perform tests and inspections and prepare reports. Allow inspectors access to scaffolding and work areas as needed to perform tests and

NOT FOR BIDDING

inspections. Retesting of materials that fail to comply with specified requirements shall be done at Contractor's expense.

B. Testing Prior to Construction: One set of tests.

C. Testing Frequency: One set of tests for each 5000 sq. ft. (464 sq. m.) of wall area or portion thereof.

D. Clay Masonry Unit Test: For each type of unit provided, according to ASTM C 67 for compressive strength.

E. Concrete Masonry Unit Test: For each type of unit provided, according to ASTM C 140 for compressive strength.

F. Mortar Aggregate Ratio Test (Proportion Specification): For each mix provided, according to ASTM C 780.

G. Mortar Test (Property Specification): For each mix provided, according to ASTM C 780. Test mortar for mortar air content and compressive strength.

H. Grout Test (Compressive Strength): For each mix provided, according to ASTM C 1019.

I. Prism Test: For each type of construction provided, according to ASTM C 1314 at 7 days and at 28 days.

3.11 REPAIRING, POINTING, AND CLEANING

A. Remove and replace masonry units that are loose, chipped, broken, stained, or otherwise damaged or that do not match adjoining units. Install new units to match adjoining units; install in fresh mortar, pointed to eliminate evidence of replacement.

B. Pointing: During the tooling of joints, enlarge voids and holes, except weep holes, and completely fill with mortar. Point up joints, including corners, openings, and adjacent construction, to provide a neat, uniform appearance. Prepare joints for sealant application, where indicated.

C. In-Progress Cleaning: Clean unit masonry as work progresses by dry brushing to remove mortar fins and smears before tooling joints.

D. Final Cleaning: After mortar is thoroughly set and cured, clean exposed masonry as follows:

1. Remove large mortar particles by hand with wooden paddles and nonmetallic scrape hoes or chisels.
2. Test cleaning methods on sample wall panel; leave one-half of panel uncleaned for comparison purposes. Obtain Architect's approval of sample cleaning before proceeding with cleaning of masonry.
3. Protect adjacent stone and nonmasonry surfaces from contact with cleaner by covering them with liquid strippable masking agent or polyethylene film and waterproof masking tape.

NOT FOR BIDDING

4. Wet wall surfaces with water before applying cleaners; remove cleaners promptly by rinsing surfaces thoroughly with clear water.
5. Clean brick by bucket-and-brush hand-cleaning method described in BIA Technical Notes 20.
6. Clean concrete masonry by applicable cleaning methods indicated in NCMA TEK 8-4A.
7. Clean masonry with a proprietary acidic cleaner applied according to manufacturer's written instructions.
8. Clean stone trim to comply with stone supplier's written instructions.
9. Clean limestone units to comply with recommendations in ILI's "Indiana Limestone Handbook."

3.12 MASONRY WASTE DISPOSAL

A. Salvageable Materials: Unless otherwise indicated, excess masonry materials are Contractor's property. At completion of unit masonry work, remove from Project site.

B. Masonry Waste Recycling: Return broken CMUs not used as fill to manufacturer for recycling.

C. Excess Masonry Waste: Remove excess clean masonry waste that cannot be recycled, and other masonry waste, and legally dispose of off Owner's property.

END OF SECTION 042000

NOT FOR BIDDING

(PAGE LEFT BLANK)

NOT FOR BIDDING

SECTION 044300 - STONE MASONRY

PART 1 - GENERAL

1.1 RELATED DOCUMENTS

A. Drawings and general provisions of the Contract, including General and Supplementary Conditions and Division 01 Specification Sections, apply to this Section.

1.2 SUMMARY

A. Section includes the following applications of stone masonry:

1. Adhered to cold-formed metal framing and sheathing.

B. Related Sections:

1. Division 07 Section "Thermal Insulation" for cavity-wall insulation installed between stone masonry and backup material.
2. Division 07 Section "Sheet Metal Flashing and Trim" for exposed sheet metal flashing.

1.3 ACTION SUBMITTALS

A. Product Data: For each type of product indicated.

1. For stone varieties proposed for use on Project, include test data indicating compliance with physical properties.

B. Samples for Initial Selection: For colored mortar and other items involving color selection.

C. Samples for Verification:

1. For each stone type indicated. Include at least two samples in each set for each type of stone, exhibiting extremes of the full range of color and other visual characteristics expected in completed Work. Samples will establish the standard by which stone provided will be judged.
2. For each color of mortar required. Label Samples to indicate types and amounts of pigments used.

1.4 INFORMATIONAL SUBMITTALS

A. List of Materials Used in Constructing Mockups: List generic product names together with manufacturers, manufacturers' product names, sources of supply, and other information as required to identify materials used. Include mix proportions for mortar and source of aggregates.

NOT FOR BIDDING

1. Submittal is for information only. Neither receipt of list nor approval of mockups constitutes approval of deviations from the Contract Documents unless such deviations are specifically brought to the attention of Architect and approved in writing.

B. Qualification Data: For qualified Installer.

1.5 QUALITY ASSURANCE

A. Installer Qualifications: A qualified installer who employs experienced stonemasons and stone fitters.

B. Source Limitations for Stone: Obtain each variety of] stone, regardless of finish, from one quarry, whether specified in this Section or in another Section of the Specifications, with resources to provide materials of consistent quality in appearance and physical properties.

C. Source Limitations for Mortar Materials: Obtain mortar ingredients of a uniform quality, including color for exposed masonry, from single manufacturer for each cementitious component and from single source or producer for each aggregate.

D. Mockups: Build mockups to demonstrate aesthetic effects and set quality standards for materials and execution.

1. Build mockup of typical wall area as shown on Drawings.
2. Build mockups for typical exterior wall in sizes approximately 48 inches (1200 mm) long by 48 inches (1200 mm) high by full thickness, including face and backup wythes and accessories.

   a. Include stone accessories at top of mockup.
   b. Include a sealant-filled joint at least 16 inches (400 mm) long in mockup.
   c. Include through wall flashing installed for a 24-inch (600-mm) length in corner of mockup approximately 16 inches (400 mm) down from top of mockup, with a 12-inch (300-mm) length of flashing left exposed to view (omit stone masonry above half of flashing).
   d. Include metal wood studs, sheathing, veneer anchors, flashing, and weep holes in exterior masonry veneer wall mockup.

3. Protect accepted mockups from the elements with weather-resistant membrane.
4. Approval of mockups is for color, texture, and blending of stone; relationship of mortar and sealant colors to stone colors; tooling of joints; and aesthetic qualities of workmanship.

   a. Approval of mockups is also for other material and construction qualities Architect specifically approves in writing.
   b. Approval of mockups does not constitute approval of deviations from the Contract Documents contained in mockups unless Architect specifically approves such deviations in writing.

5. Approved mockups may not become part of the completed Work if undisturbed at time of Substantial Completion.

E. Preinstallation Conference: Conduct conference at Project site.

NOT FOR BIDDING

1.6 DELIVERY, STORAGE, AND HANDLING

A. Store cementitious materials on elevated platforms, under cover, and in a dry location. Do not use cementitious materials that have become damp.

B. Store aggregates where grading and other required characteristics can be maintained and contamination avoided.

C. Deliver preblended, dry mortar mix in moisture-resistant containers designed for lifting and emptying into dispensing silo. Store preblended, dry mortar mix in delivery containers on elevated platforms, under cover, and in a dry location or in a metal dispensing silo with weatherproof cover.

D. Store masonry accessories, including metal items, to prevent corrosion and accumulation of dirt and oil.

1.7 PROJECT CONDITIONS

A. Protection of Stone Masonry: During construction, cover tops of walls, projections, and sills with waterproof sheeting at end of each day's work. Cover partially completed stone masonry when construction is not in progress.

1. Extend cover a minimum of 24 inches (600 mm) down both sides and hold cover securely in place.

B. Stain Prevention: Immediately remove mortar and soil to prevent them from staining the face of stone masonry.

1. Protect base of walls from rain-splashed mud and mortar splatter by coverings spread on the ground and over the wall surface.
2. Protect sills, ledges, and projections from mortar droppings.
3. Protect surfaces of windows and door frames, as well as similar products with painted and integral finishes, from mortar droppings.
4. Turn scaffold boards near the wall on edge at end of each day to prevent rain from splashing mortar and dirt on completed stone masonry.

C. Cold-Weather Requirements: Do not use frozen materials or materials mixed or coated with ice or frost. Do not build on frozen substrates. Remove and replace stone masonry damaged by frost or freezing conditions. Comply with cold-weather construction requirements contained in ACI 530.1/ASCE 6/TMS 602.

1. Cold-Weather Cleaning: Use liquid cleaning methods only when air temperature is 40 deg F (4 deg C) and above and will remain so until masonry has dried, but not less than 7 days after completing cleaning.

D. Hot-Weather Requirements: Comply with hot-weather construction requirements contained in ACI 530.1/ASCE 6/TMS 602.

NOT FOR BIDDING

1.8 COORDINATION

A. Advise installers of other work about specific requirements for placement of reinforcement, veneer anchors, flashing, and similar items to be built into stone masonry.

PART 2 - PRODUCTS

2.1 STONE

A. Varieties and Sources: Subject to compliance with requirements, provide stone of varieties and from sources complying with Division 04 Section "Exterior Stone Cladding."

2.2 FIELDSTONE

A. Provide sound natural stone as follows:

1. Basis-of-Design Product: Subject to compliance with requirements, provide Pinnacle Stone Products, LLC Thin Stone Veneer, Fieldstone Collection, Freeport pattern, or equivalent in material, performance, color, patterns and warrantee.

2. Color and pattern to match existing stone work located on the Killens Pond State Park Nature Center.

2.3 MORTAR MATERIALS

A. Portland Cement: ASTM C 150, Type I or II, except Type III may be used for cold-weather construction. Provide natural color or white cement as required to produce mortar color indicated.

1. Low-Alkali Cement: Not more than 0.60 percent total alkali when tested according to ASTM C 114.

B. Hydrated Lime: ASTM C 207, Type S.

C. Portland Cement-Lime Mix: Packaged blend of portland cement complying with ASTM C 150, Type I or III, and hydrated lime complying with ASTM C 207.

1. Products: Subject to compliance with requirements, available products that may be incorporated into the Work include, but are not limited to, the following:

a. Essroc, Italcementi Group; Capitol PCL Blend.
b. Holcim (US) Inc.; Rainbow Mortamix Custom Color Cement/Lime.
c. Lafarge North America; Eaglebond.
d. Lehigh Cement Company; Lehigh Custom Color Portland/Lime Cement.

D. Mortar Cement: ASTM C 1329.

1. Products: Subject to compliance with requirements, available products that may be incorporated into the Work include, but are not limited to, the following:

NOT FOR BIDDING

a. Lafarge North America; Lafarge Mortar Cement.

E. Masonry Cement: ASTM C 91.

1. Products: Subject to compliance with requirements, available products that may be incorporated into the Work include, but are not limited to, the following:

a. Essroc, Italcementi Group; Brixment.
b. Holcim (US) Inc.; Mortamix Masonry Cement.
c. Lafarge North America; Lafarge Masonry Cement.
d. Lehigh Cement Company; Lehigh Masonry Cement.

F. Mortar Pigments: Natural and synthetic iron oxides and chromium oxides, compounded for use in mortar mixes. Use only pigments with a record of satisfactory performance in stone masonry mortar.

1. Products: Subject to compliance with requirements, available products that may be incorporated into the Work include, but are not limited to, the following:

a. Davis Colors; True Tone Mortar Colors.
b. Lanxess Corporation; Bayferrox Iron Oxide Pigments.
c. Solomon Colors; SGS Mortar Colors.

G. Colored Cement Product: Packaged blend made from portland cement and lime, masonry cement or mortar cement and mortar pigments, all complying with specified requirements, and containing no other ingredients.

1. Formulate blend as required to produce color indicated or, if not indicated, as selected from manufacturer's standard colors.
2. Pigments shall not exceed 10 percent of portland cement by weight.
3. Pigments shall not exceed 5 percent of masonry cement or mortar cement by weight.
4. Products: Subject to compliance with requirements, available products that may be incorporated into the Work include, but are not limited to, the following:

a. Colored Portland Cement-Lime Mix:

1) Holcim (US) Inc.; Rainbow Mortamix Custom Color Cement/Lime.
2) Lafarge North America; Eaglebond.
3) Lehigh Cement Company; Lehigh Custom Color Portland/Lime Cement.

b. Colored Masonry Cement:

1) Essroc, Italcementi Group; Brixment-in-Color.
2) Holcim (US) Inc.; Rainbow Mortamix Custom Color Masonry Cement.
3) Lafarge North America; Florida Custom Color Masonry
4) Lehigh Cement Company; Lehigh Custom Color Masonry Cement.

c. Colored Mortar Cement:

1) Lafarge North America; Magnolia Superbond Mortar Cement.

H. Aggregate: ASTM C 144 and as follows:

NOT FOR BIDDING

1. For pointing mortar, use aggregate graded with 100 percent passing No. 16 (1.18-mm) sieve.
2. White Aggregates: Natural white sand or ground white stone.
3. Colored Aggregates: Natural-colored sand or ground marble, granite, or other sound stone; of color necessary to produce required mortar color.

   a. Match Architect's sample.

I. Latex Additive: Manufacturer's standard water emulsion, serving as replacement for part or all of gaging water, of type specifically recommended by latex-additive manufacturer for use with field-mixed portland cement mortar bed, and not containing a retarder.

1. Manufacturers: Subject to compliance with requirements, available manufacturers offering products that may be incorporated into the work include, but are not limited to, the following:

   a. Boiardi Products Corporation.
   b. Bonsal.
   c. Bostik Findley Inc.
   d. C-Cure.
   e. Custom Building Products.
   f. DAP Inc.
   g. Laticrete International, Inc.
   h. MAPEI Corp.
   i. Summitville Tiles, Inc.
   j. TEC Specialty Construction Brands; H. B. Fuller Company.

J. Cold-Weather Admixture: Nonchloride, noncorrosive, accelerating admixture complying with ASTM C 494/C 494M, Type C, and recommended by manufacturer for use in masonry mortar of composition indicated.

1. Products: Subject to compliance with requirements, available products that may be incorporated into the Work include, but are not limited to, the following:

   a. Euclid Chemical Company (The); Accelguard 80.
   b. Grace Construction Products, a unit of W. R. Grace & Co. - Conn.; Morset.
   c. Sonneborn, Div. of Degussa Building Systems; Trimix-NCA.

K. Water: Potable.

2.4 VENEER ANCHORS

A. Materials:

1. Hot Dip Galvanized-Steel Sheet: ASTM A 1008/A 1008M, cold-rolled, carbon-steel sheet hot-dip galvanized after fabrication to comply with ASTM A 153/A 153M, Class B-2.

NOT FOR BIDDING

2.5 EMBEDDED FLASHING MATERIALS

A. Metal Flashing: Provide metal flashing, where flashing is exposed or partly exposed and where indicated, complying with SMACNA's "Architectural Sheet Metal Manual" and as follows:

1. Fabricate continuous flashings in sections 96 inches (2400 mm) long minimum, but not exceeding 12 feet (3.6 m). Provide splice plates at joints of formed, smooth metal flashing.
2. Fabricate through-wall flashing with snaplock receiver on exterior face where indicated to receive counterflashing.
3. Fabricate through-wall flashing with drip edge unless otherwise indicated. Fabricate by extending flashing 1/2 inch (13 mm) out from wall, with outer edge bent down 30 degree.
4. Fabricate through-wall flashing with sealant stop unless otherwise indicated. Fabricate by bending metal back on itself 3/4 inch (19 mm) at exterior face of wall and down into joint 3/8 inch (10 mm) to form a stop for retaining sealant backer rod.
5. Fabricate metal drip edges and sealant stops for ribbed metal flashing from plain metal flashing of same metal as ribbed flashing and extending at least 3 inches (75 mm) into wall with hemmed inner edge to receive ribbed flashing and form a hooked seam. Form hem on upper surface of metal so that completed seam will shed water.
6. Metal Drip Edges: Fabricate from stainless steel. Extend at least 3 inches (75 mm) into wall and 1/2 inch (13 mm) out from wall, with outer edge bent down 30 degrees.
7. Metal Flashing Terminations: Fabricate from stainless steel. Extend at least 3 inches (75 mm) into wall and out to exterior face of wall. At exterior face of wall, bend metal back on itself for 3/4 inch (19 mm) and down into joint 3/8 inch (10 mm) to form a stop for retaining sealant backer rod.

B. Flexible Flashing: For flashing not exposed to the exterior, use one of the following unless otherwise indicated:

1. Rubberized-Asphalt Flashing: Composite flashing product consisting of a pliable, adhesive rubberized-asphalt compound, bonded to a high-density, cross-laminated polyethylene film to produce an overall thickness of not less than 0.030 inch (0.8 mm).

   a. Products: Subject to compliance with requirements, available products that may be incorporated into the Work include, but are not limited to, the following]:

      1) Advanced Building Products Inc.; Peel-N-Seal.
      2) Carlisle Coatings & Waterproofing; CCW-705-TWF Thru-Wall Flashing.
      3) Dur-O-Wal, a Dayton Superior Company; Dur-O-Barrier-44.
      4) Grace Construction Products, a unit of W. R. Grace & Co. - Conn.; Perm-A-Barrier Wall Flashing.
      5) Heckmann Building Products Inc.; No. 82 Rubberized-Asphalt Thru-Wall Flashing.
      6) Hohmann & Barnard, Inc.; Textroflash.
      7) Polyguard Products, Inc.; Polyguard 300.
      8) Polytite Manufacturing Corporation; Poly-Barrier Self-Adhering Wall Flashing.
      9) Williams Products, Inc.; Everlastic MF-40.

2. Elastomeric Thermoplastic Flashing: Composite flashing product consisting of a polyester-reinforced ethylene interpolymer alloy as follows:

   a. Monolithic Sheet: Elastomeric thermoplastic flashing, 0.040 inch (1.0 mm) thick.

NOT FOR BIDDING

b. Self-Adhesive Sheet: Elastomeric thermoplastic flashing, 0.025 inch (0.6 mm) thick, with a 0.015-inch- (0.4-mm-) thick coating of rubberized-asphalt adhesive.

c. Self-Adhesive Sheet with Drip Edge: Elastomeric thermoplastic flashing, 0.025 inch (0.6 mm) thick, with a 0.015-inch- (0.4-mm-) thick coating of rubberized-asphalt adhesive. Where flashing extends to face of masonry, rubberized-asphalt coating is held back approximately 1-1/2 inches (38 mm) from edge.

1) Color: Black.

d. Accessories: Provide preformed corners, end dams, other special shapes, and seaming materials produced by flashing manufacturer.

e. Products: Subject to compliance with requirements, available products that may be incorporated into the Work include, but are not limited to, the following:

1) Hyload, Inc.; Hyload Cloaked Flashing System.

3. EPDM Flashing: Sheet flashing product made from ethylene-propylene-diene terpolymer, complying with ASTM D 4637; 0.040 inch (1.0 mm) thick.

a. Products: Subject to compliance with requirements, available products that may be incorporated into the Work include, but are not limited to, the following:

1) Carlisle Coatings & Waterproofing; Pre-Kleened EPDM Thru-Wall Flashing.
2) Firestone Building Products; FlashGuard.
3) Heckmann Building Products Inc.; No. 81 EPDM Thru-Wall Flashing.

C. Adhesives, Primers, and Seam Tapes for Flexible Flashings: Flashing manufacturer's standard products or products recommended by flashing manufacturer for bonding flashing sheets to each other and to substrates.

2.6 MISCELLANEOUS MASONRY ACCESSORIES

A. Compressible Filler: Premolded filler strips complying with ASTM D 1056, Grade 2A1; compressible up to 35 percent; of width and thickness indicated; formulated from neoprene, urethane or PVC.

B. Expanded Metal Lath: 3.4 lb/sq. yd. (1.8 kg/sq. m), self-furring, diamond-mesh lath complying with ASTM C 847. Fabricate from structural-quality, zinc-coated (galvanized) steel sheet complying with ASTM A 653/A 653M, G60 (Z180).

C. Lath Attachment Devices: Material and type required by ASTM C 1063 for installations indicated.

2.7 MASONRY CLEANERS

A. Proprietary Acidic Cleaner: Manufacturer's standard-strength cleaner designed for removing mortar and grout stains, efflorescence, and other new construction stains from stone masonry surfaces without discoloring or damaging masonry surfaces; expressly approved for intended use by cleaner manufacturer and stone producer.

NOT FOR BIDDING

1. Manufacturers: Subject to compliance with requirements, available manufacturers offering products that may be incorporated into the Work include, but are not limited to, the following:

   a. Diedrich Technologies, Inc.
   b. Dominion Restoration Products.
   c. EaCo Chem, Inc.
   d. Hydrochemical Techniques, Inc.
   e. Prosoco, Inc.

2.8 MORTAR MIXES

A. General: Do not use admixtures, including pigments, air-entraining agents, accelerators, retarders, water-repellent agents, antifreeze compounds, or other admixtures, unless otherwise indicated.

   1. Do not use calcium chloride.
   2. Limit cementitious materials in mortar to portland cement, mortar cement, and lime.
   3. Add cold-weather admixture (if used) at same rate for all mortar that will be exposed to view, regardless of weather conditions, to ensure that mortar color is consistent.
   4. Mixing Pointing Mortar: Thoroughly mix cementitious and aggregate materials together before adding water. Then mix again, adding only enough water to produce a damp, unworkable mix that will retain its form when pressed into a ball. Maintain mortar in this dampened condition for one to two hours. Add remaining water in small portions until mortar reaches desired consistency. Use mortar within 30 minutes of final mixing; do not retemper or use partially hardened material.

B. Preblended, Dry Mortar Mix: Furnish dry mortar ingredients in the form of a preblended mix. Measure quantities by weight to ensure accurate proportions, and thoroughly blend ingredients before delivering to Project site.

C. Mortar for Stone Masonry: Comply with ASTM C 270, Proportion Specification.

   1. Mortar for Setting Stone: Type S.
   2. Mortar for Pointing Stone: Type N.

D. Latex-Modified Portland Cement Setting Mortar: Proportion and mix portland cement, aggregate, and latex additive to comply with latex-additive manufacturer's written instructions.

E. Cement-Paste Bond Coat: Mix either neat cement and water or cement, sand, and water to a consistency similar to that of thick cream.

   1. For latex-modified portland cement setting-bed mortar, substitute latex admixture for part or all of water, according to latex-additive manufacturer's written instructions.

F. Mortar for Scratch Coat over Metal Lath: 1 part portland cement, 1/2 part lime, 5 parts loose damp sand, and enough water to produce a workable consistency.

G. Pigmented Mortar: Use colored cement product or select and proportion pigments with other ingredients to produce color required. Do not add pigments to colored cement products.

   1. Pigments shall not exceed 10 percent of portland cement by weight.

NOT FOR BIDDING

2. Pigments shall not exceed 5 percent of masonry cement or mortar cement by weight.
3. Mix to match Architect's sample.

H. Colored-Aggregate Mortar: Produce required mortar color by using colored aggregates and natural color or white cement as necessary to produce required mortar color.

1. Mix to match Architect's sample.

2.9 FABRICATION

A. Fabricate stone to comply with sizes, shapes, and tolerances recommended by applicable stone association or, if none, by stone source, for faces, edges, beds, and backs.

1. For granite, comply with recommendations in NBGQA's "Specifications for Architectural Granite."
2. For limestone, comply with recommendations in ILI's "Indiana Limestone Handbook."

B. Cut stone to produce pieces of thickness, size, and shape indicated, including details on Drawings. Dress joints (bed and vertical) straight and at right angle to face unless otherwise indicated.

C. Cut and drill sinkages and holes in stone for anchors and supports.

D. Carefully inspect stone at quarry or fabrication plant for compliance with requirements for appearance, material, and fabrication. Replace defective units before shipment.

1. Clean sawed backs of stones to remove rust stains and iron particles.

E. Gage backs of stones for adhered veneer if more than 81 sq. in. (522 sq. cm) in area.

F. Thickness of Stone: Provide thickness indicated, but not less than the following:

1. Thickness: 1.5 inch (25 mm) plus or minus 1/8 inch (3 mm).

PART 3 - EXECUTION

3.1 EXAMINATION

A. Examine surfaces indicated to receive stone masonry, with Installer present, for compliance with requirements for installation tolerances and other conditions affecting performance.

B. Examine substrate to verify that dovetail slots, inserts, reinforcement, veneer anchors, flashing, and other items installed in substrates and required for or extending into stone masonry are correctly installed.

C. Examine wall framing, sheathing, and weather-resistant sheathing paper to verify that stud locations are suitable for spacing of veneer anchors and that installation will result in a weatherproof covering.

D. Proceed with installation only after unsatisfactory conditions have been corrected.

NOT FOR BIDDING

3.2 PREPARATION

A. Accurately mark stud centerlines on face of weather-resistant sheathing paper before beginning stone installation.

B. Coat concrete and unit masonry backup with asphalt dampproofing.

C. Clean dirty or stained stone surfaces by removing soil, stains, and foreign materials before setting. Clean stone by thoroughly scrubbing with fiber brushes and then drenching with clear water. Use only mild cleaning compounds that contain no caustic or harsh materials or abrasives.

3.3 SETTING OF STONE MASONRY, GENERAL

A. Perform necessary field cutting and trimming as stone is set.

1. Use power saws to cut stone that is fabricated with saw-cut surfaces. Cut lines straight and true, with edges eased slightly to prevent snipping.
2. Use hammer and chisel to split stone that is fabricated with split surfaces. Make edges straight and true, matching similar surfaces that were shop or quarry fabricated.
3. Pitch face at field-split edges as needed to match stones that are not field split.

B. Sort stone before it is placed in wall to remove stone that does not comply with requirements relating to aesthetic effects, physical properties, or fabrication, or that is otherwise unsuitable for intended use.

C. Arrange stones in uncoursed rubble pattern with joint widths within tolerances indicated.

D. Arrange stones with color and size variations uniformly dispersed for an evenly blended appearance.

E. Set stone to comply with requirements indicated on Drawings. Install supports, fasteners, and other attachments indicated or necessary to secure stone masonry in place. Set stone accurately in locations indicated with edges and faces aligned according to established relationships and indicated tolerances.

F. Maintain uniform joint widths except for variations due to different stone sizes and where minor variations are required to maintain bond alignment if any. Lay walls with joints not less than 3/8 inch (10 mm) at narrowest points or more than 5/8 inch (16 mm) at widest points.

G. Provide sealant joints of widths and at locations indicated.

1. Keep sealant joints free of mortar and other rigid materials.
2. Sealing joints is specified in Division 07 Section "Joint Sealants."

H. Install embedded flashing and weep holes at shelf angles, lintels, ledges, other obstructions to downward flow of water in wall, and where indicated.

1. At stud-framed walls, extend flashing through stone masonry, up the face of sheathing at least 8 inches (200 mm), and behind weather-resistant sheathing paper.
2. At sills, extend flashing not less than 4 inches (100 mm) at ends.

NOT FOR BIDDING

3. At ends of head and sill flashing turn up not less than 2 inches (50 mm) to form end dams.
4. Extend sheet metal flashing 1/2 inch (13 mm) beyond face of masonry at exterior and turn flashing down to form a drip.
5. Install metal drip edges beneath flexible flashing at exterior face of wall. Stop flexible flashing 1/2 inch (13 mm) back from outside face of wall and adhere flexible flashing to top of metal drip edge.
6. Install metal flashing termination beneath flexible flashing at exterior face of wall. Stop flexible flashing 1/2 inch (13 mm) back from outside face of wall and adhere flexible flashing to top of metal flashing termination.
7. Cut flexible flashing flush with face of wall after masonry wall construction is completed.

3.4 CONSTRUCTION TOLERANCES

A. Variation from Plumb: For vertical lines and surfaces, do not exceed 1/4 inch in 10 feet (6 mm in 3 m), 3/8 inch in 20 feet (10 mm in 6 m), or 1/2 inch in 40 feet (13 mm in 12 m) or more. For external corners, expansion joints, control joints, and other conspicuous lines, do not exceed 1/4 inch in 20 feet (6 mm in 6 m) or 1/2 inch in 40 feet (13 mm in 12 m) or more.

B. Variation from Level: For bed joints and lines of exposed lintels, sills, parapets, horizontal grooves, and other conspicuous lines, do not exceed 1/4 inch in 20 feet (6 mm in 6 m) or 1/2 inch in 40 feet (13 mm in 12 m) or more.

C. Variation of Linear Building Line: For position shown in plan, do not exceed 1/2 inch in 20 feet (13 mm in 6 m) or 3/4 inch in 40 feet (19 mm in 12 m) or more.

D. Measure variation from level, plumb, and position shown in plan as variation of the average plane of the face of each stone from level, plumb, or dimensioned plane.

E. Variation in Mortar-Joint Thickness: Do not vary from joint size range indicated.

F. Variation in Plane between Adjacent Stones: Do not exceed one-half of tolerance specified for thickness of stone.

3.5 INSTALLATION OF ADHERED STONE MASONRY VENEER

A. Install flashing over sheathing and behind weather-resistant sheathing paper by fastening through sheathing into framing.

B. Install lath over weather-resistant sheathing paper by fastening through sheathing into framing to comply with ASTM C 1063.

C. Install lath over unit masonry and concrete to comply with ASTM C 1063.

D. Install scratch coat over metal lath 3/4 inch (19 mm) thick to comply with ASTM C 926.

E. Coat backs of stone units and face of scratch coat with cement-paste bond coat, then butter both surfaces with setting mortar. Use sufficient setting mortar so a slight excess will be forced out the edges of stone units as they are set. Tap units into place, completely filling space between units and scratch coat.

NOT FOR BIDDING

F. Rake out joints for pointing with mortar to depth of not less than 1/2 inch (13 mm) before setting mortar has hardened. Rake joints to uniform depths with square bottoms and clean sides.

3.6 POINTING

A. Prepare stone-joint surfaces for pointing with mortar by removing dust and mortar particles. Where setting mortar was removed to depths greater than surrounding areas, apply pointing mortar in layers not more than 3/8 inch (10 mm) deep until a uniform depth is formed.

B. Point stone joints by placing and compacting pointing mortar in layers not more than 3/8 inch (10 mm) deep. Compact each layer thoroughly and allow to become thumbprint hard before applying next layer.

C. Tool joints, when pointing mortar is thumbprint hard, with a smooth jointing tool to produce the following joint profile:

1. Joint Profile: Smooth, flat face recessed 1/4 inch (6 mm) below edges of stone (raked joint.

3.7 ADJUSTING AND CLEANING

A. Remove and replace stone masonry of the following description:

1. Broken, chipped, stained, or otherwise damaged stone. Stone may be repaired if methods and results are approved by Architect.
2. Defective joints.
3. Stone masonry not matching approved samples and mockups.
4. Stone masonry not complying with other requirements indicated.

B. Replace in a manner that results in stone masonry matching approved samples and mockups, complying with other requirements, and showing no evidence of replacement.

C. In-Progress Cleaning: Clean stone masonry as work progresses. Remove mortar fins and smears before tooling joints.

D. Final Cleaning: After mortar is thoroughly set and cured, clean stone masonry as follows:

1. Remove large mortar particles by hand with wooden paddles and nonmetallic scrape hoes or chisels.
2. Test cleaning methods on mockup; leave one-half of panel uncleaned for comparison purposes. Obtain Architect's approval of sample cleaning before cleaning stone masonry.
3. Protect adjacent stone and nonmasonry surfaces from contact with cleaner by covering them with liquid strippable masking agent, polyethylene film, or waterproof masking tape.
4. Wet wall surfaces with water before applying cleaner; remove cleaner promptly by rinsing thoroughly with clear water.
5. Clean stone masonry by bucket and brush hand-cleaning method described in BIA Technical Note No. 20 Revised II, using job-mixed detergent solution.
6. Clean stone masonry with proprietary acidic cleaner applied according to manufacturer's written instructions.

NOT FOR BIDDING

7. Clean limestone masonry to comply with recommendations in ILI's "Indiana Limestone Handbook."

3.8 EXCESS MATERIALS AND WASTE

A. Excess Stone: Stack excess stone where directed by Owner for Owner's use.

B. Excess Masonry Waste: Remove excess clean masonry waste and other waste, and legally dispose of off Owner's property.

END OF SECTION 044300

NOT FOR BIDDING

SECTION 051200 - STRUCTURAL STEEL FRAMING

PART 1 - GENERAL

1.1 RELATED DOCUMENTS

A. Drawings and general provisions of the Contract, including General and Supplementary Conditions and Division 01 Specification Sections, apply to this section.

1.2 SUMMARY

A. Section Includes:

1. Structural steel.
2. Grout.

B. Related Requirements:
1. Section 055000 "Metal Fabrications" for steel lintels and shelf angles not attached to structural-steel frame miscellaneous steel fabrications and other steel items not defined as structural steel.

1.3 DEFINITIONS

A. Structural Steel: Elements of the structural frame indicated on Drawings and as described in AISC 303, "Code of Standard Practice for Steel Buildings and Bridges."

1.4 COORDINATION

A. Coordinate selection of shop primers with topcoats to be applied over them. Comply with paint and coating manufacturers' written recommendations to ensure that shop primers and topcoats are compatible with one another.

B. Coordinate installation of anchorage items to be embedded in or attached to other construction without delaying the work. Provide setting diagrams, sheet metal templates, instructions, and directions for installation.

1.5 PREINSTALLATION MEETINGS

A. Preinstallation Conference: Conduct conference at Project site.

1.6 ACTION SUBMITTALS

A. Product Data: For each type of product.

NOT FOR BIDDING

B. Shop Drawings: Show fabrication of structural-steel components.

1. Include details of cuts, connections, splices, camber, holes, and other pertinent data.
2. Include embedment Drawings.
3. Indicate welds by standard AWS symbols, distinguishing between shop and field welds, and show size, length, and type of each weld. Show backing bars that are to be removed and supplemental fillet welds where backing bars are to remain.
4. Indicate type, size, and length of bolts, distinguishing between shop and field bolts. Identify pretensioned and slip-critical, high-strength bolted connections.

1.7 INFORMATIONAL SUBMITTALS

A. Qualification Data: For Installer, fabricator, testing agency.

B. Welding certificates.

C. Mill test reports for structural steel, including chemical and physical properties.

D. Product Test Reports: For the following:

1. Bolts, nuts, and washers including mechanical properties and chemical analysis.
2. Shop primers.
3. Nonshrink grout.

E. Source quality-control reports.

F. Field quality-control reports.

1.8 QUALITY ASSURANCE

A. Fabricator Qualifications: A qualified fabricator that participates in the AISC Quality Certification Program and is designated an AISC-Certified Plant, Category STD.

B. Installer Qualifications: A qualified installer who participates in the AISC Quality Certification Program and is designated an AISC-Certified Erector, Category ACSE.

C. Welding Qualifications: Qualify procedures and personnel according to AWS D1.1/D1.1M, "Structural Welding Code - Steel."

1. Welders and welding operators performing work on bottom-flange, demand-critical welds shall pass the supplemental welder qualification testing, as required by AWS D1.8/D1.8M. FCAW-S and FCAW-G shall be considered separate processes for welding personnel qualification.

D. Comply with applicable provisions of the following specifications and documents:

1. AISC 303.
2. RCSC's "Specification for Structural Joints Using ASTM A 325 or A 490 Bolts."

NOT FOR BIDDING

1.9 DELIVERY, STORAGE, AND HANDLING

A. Store materials to permit easy access for inspection and identification. Keep steel members off ground and spaced by using pallets, dunnage, or other supports and spacers. Protect steel members and packaged materials from corrosion and deterioration.

1. Do not store materials on structure in a manner that might cause distortion, damage, or overload to members or supporting structures. Repair or replace damaged materials or structures as directed.

B. Store fasteners in a protected place in sealed containers with manufacturer's labels intact.

1. Fasteners may be repackaged provided Owner's testing and inspecting agency observes repackaging and seals containers.
2. Clean and relubricate bolts and nuts that become dry or rusty before use.
3. Comply with manufacturers' written recommendations for cleaning and lubricating ASTM F 1852 fasteners and for retesting fasteners after lubrication.

PART 2 - PRODUCTS

2.1 STRUCTURAL-STEEL MATERIALS

A. W-Shapes: ASTM A 992/A 992M.

B. Channels, Angles-Shapes: ASTM A 36/A 36M.

C. Plate and Bar: ASTM A 36/A 36M.

D. Cold-Formed Hollow Structural Sections: ASTM A 500/A 500M, Grade B, structural tubing.

E. All structural steel members to be Galvanized.

2.2 BOLTS, CONNECTORS, AND ANCHORS

A. High-Strength Bolts, Nuts, and Washers: ASTM A 325 (ASTM A 325M), Type 1, heavy-hex steel structural bolts; and ASTM F 436 (ASTM F 436M), Type 1, hardened carbon-steel washers; all with plain finish.

B. Unheaded Anchor Rods: ASTM F 1554, Grade 36.

1. Configuration: Hooked.
2. Nuts: ASTM A 563 (ASTM A 563M) hex carbon steel.
3. Washers: ASTM F 436 (ASTM F 436M), Type 1, hardened carbon steel.
4. Finish: Hot-dip zinc coating, ASTM A 153/A 153M, Class C.

2.3 PRIMER

A. Primer: Galvanizing Repair Paint: MPI#18, MPI#19, or SSPC-Paint 20.

NOT FOR BIDDING

2.4 GROUT

A. Nonmetallic, Shrinkage-Resistant Grout: ASTM C 1107/C 1107M, factory-packaged, nonmetallic aggregate grout, noncorrosive and nonstaining, mixed with water to consistency suitable for application and a 30-minute working time.

2.5 FABRICATION

A. Structural Steel: Fabricate and assemble in shop to greatest extent possible. Fabricate according to AISC 303, "Code of Standard Practice for Steel Buildings and Bridges," and to AISC 360.

1. Camber structural-steel members where indicated.
2. Fabricate beams with rolling camber up.
3. Identify high-strength structural steel according to ASTM A 6/A 6M and maintain markings until structural steel has been erected.
4. Mark and match-mark materials for field assembly.
5. Complete structural-steel assemblies, including welding of units, before starting shop-priming operations.

B. Thermal Cutting: Perform thermal cutting by machine to greatest extent possible.

1. Plane thermally cut edges to be welded to comply with requirements in AWS D1.1/D1.1M.

C. Bolt Holes: Cut, drill, mechanically thermal cut, or punch standard bolt holes perpendicular to metal surfaces.

D. Finishing: Accurately finish ends of columns and other members transmitting bearing loads.

E. Welded Door Frames: Build up welded door frames attached to structural-steel frame. Weld exposed joints continuously and grind smooth. Plug-weld fixed steel bar stops to frames. Secure removable stops to frames with countersunk machine screws, uniformly spaced not more than 10 inches (250 mm) o.c. unless otherwise indicated.

2.6 SHOP CONNECTIONS

A. High-Strength Bolts: Shop install high-strength bolts according to RCSC's "Specification for Structural Joints Using ASTM A 325 or A 490 Bolts" for type of bolt and type of joint specified.

1. Joint Type: Snug tightened.

B. Weld Connections: Comply with AWS D1.1/D1.1M for tolerances, appearances, welding procedure specifications, weld quality, and methods used in correcting welding work.

1. Assemble and weld built-up sections by methods that maintain true alignment of axes without exceeding tolerances in AISC 303 for mill material.

NOT FOR BIDDING

2.7 SHOP PRIMING

A. Shop prime steel surfaces except the following:

1. Surfaces embedded in concrete or mortar. Extend priming of partially embedded members to a depth of 2 inches (50 mm).
2. Surfaces to be field welded.
3. Surfaces of high-strength bolted, slip-critical connections.
4. Surfaces to receive sprayed fire-resistive materials (applied fireproofing).
5. Galvanized surfaces.
6. Surfaces enclosed in interior construction.

B. Surface Preparation: Clean surfaces to be painted. Remove loose rust and mill scale and spatter, slag, or flux deposits. Prepare surfaces according to the following specifications and standards:

1. SSPC-SP 2, "Hand Tool Cleaning."
2. SSPC-SP 3, "Power Tool Cleaning."
3. SSPC-SP 7/NACE No. 4, "Brush-off Blast Cleaning."
4. SSPC-SP 11, "Power Tool Cleaning to Bare Metal."
5. SSPC-SP 14/NACE No. 8, "Industrial Blast Cleaning."
6. SSPC-SP 6/NACE No. 3, "Commercial Blast Cleaning."
7. SSPC-SP 10/NACE No. 2, "Near-White Blast Cleaning."
8. SSPC-SP 5/NACE No. 1, "White Metal Blast Cleaning."
9. SSPC-SP 8, "Pickling."

C. Priming: Immediately after surface preparation, apply primer according to manufacturer's written instructions and at rate recommended by SSPC to provide a minimum dry film thickness of 1.5 mils (0.038 mm). Use priming methods that result in full coverage of joints, corners, edges, and exposed surfaces.

1. Stripe paint corners, crevices, bolts, welds, and sharp edges.
2. Apply two coats of shop paint to surfaces that are inaccessible after assembly or erection. Change color of second coat to distinguish it from first.

D. Painting: Prepare steel and apply a one-coat, nonasphaltic primer complying with SSPC-PS Guide 7.00, "Painting System Guide 7.00: Guide for Selecting One-Coat Shop Painting Systems," to provide a dry film thickness of not less than 1.5 mils (0.038 mm).

2.8 SOURCE QUALITY CONTROL

A. Testing Agency: Engage a qualified testing agency to perform shop tests and inspections.

1. Provide testing agency with access to places where structural-steel work is being fabricated or produced to perform tests and inspections.

B. Bolted Connections: Inspect shop-bolted connections according to RCSC's "Specification for Structural Joints Using ASTM A 325 or A 490 Bolts."

C. Welded Connections: Visually inspect shop-welded connections according to AWS D1.1/D1.1M and the following inspection procedures, at testing agency's option:

NOT FOR BIDDING

1. Liquid Penetrant Inspection: ASTM E 165.
2. Magnetic Particle Inspection: ASTM E 709; performed on root pass and on finished weld. Cracks or zones of incomplete fusion or penetration are not accepted.
3. Ultrasonic Inspection: ASTM E 164.
4. Radiographic Inspection: ASTM E 94.

D. In addition to visual inspection, test and inspect shop-welded shear connectors according to requirements in AWS D1.1/D1.1M for stud welding and as follows:

1. Perform bend tests if visual inspections reveal either a less-than-continuous 360-degree flash or welding repairs to any shear connector.
2. Conduct tests according to requirements in AWS D1.1/D1.1M on additional shear connectors if weld fracture occurs on shear connectors already tested.

E. Prepare test and inspection reports.

PART 3 - EXECUTION

3.1 EXAMINATION

A. Verify, with certified steel erector present, elevations of concrete- and masonry-bearing surfaces and locations of anchor rods, bearing plates, and other embedments for compliance with requirements.

1. Prepare a certified survey of existing conditions. Include bearing surfaces, anchor rods, bearing plates, and other embedments showing dimensions, locations, angles, and elevations.

B. Proceed with installation only after unsatisfactory conditions have been corrected.

3.2 PREPARATION

A. Provide temporary shores, guys, braces, and other supports during erection to keep structural steel secure, plumb, and in alignment against temporary construction loads and loads equal in intensity to design loads. Remove temporary supports when permanent structural steel, connections, and bracing are in place unless otherwise indicated.

1. Do not remove temporary shoring supporting composite deck construction until cast-in-place concrete has attained its design compressive strength.

3.3 ERECTION

A. Set structural steel accurately in locations and to elevations indicated and according to AISC 303 and AISC 360.

B. Baseplates Bearing Plates and Leveling Plates: Clean concrete- and masonry-bearing surfaces of bond-reducing materials, and roughen surfaces prior to setting plates. Clean bottom surface of plates.

NOT FOR BIDDING

1. Set plates for structural members on wedges, shims, or setting nuts as required.
2. Weld plate washers to top of baseplate.
3. Snug-tighten anchor rods after supported members have been positioned and plumbed. Do not remove wedges or shims but, if protruding, cut off flush with edge of plate before packing with grout.
4. Promptly pack grout solidly between bearing surfaces and plates so no voids remain. Neatly finish exposed surfaces; protect grout and allow to cure. Comply with manufacturer's written installation instructions for shrinkage-resistant grouts.

C. Maintain erection tolerances of structural steel within AISC 303, "Code of Standard Practice for Steel Buildings and Bridges."

D. Align and adjust various members that form part of complete frame or structure before permanently fastening. Before assembly, clean bearing surfaces and other surfaces that are in permanent contact with members. Perform necessary adjustments to compensate for discrepancies in elevations and alignment.

1. Level and plumb individual members of structure.
2. Make allowances for difference between temperature at time of erection and mean temperature when structure is completed and in service.

E. Splice members only where indicated.

F. Do not use thermal cutting during erection unless approved by Architect. Finish thermally cut sections within smoothness limits in AWS D1.1/D1.1M.

G. Do not enlarge unfair holes in members by burning or using drift pins. Ream holes that must be enlarged to admit bolts.

3.4 FIELD CONNECTIONS

A. High-Strength Bolts: Install high-strength bolts according to RCSC's "Specification for Structural Joints Using ASTM A 325 or A 490 Bolts" for type of bolt and type of joint specified.

1. Joint Type: Snug tightened.

B. Weld Connections: Comply with AWS D1.1/D1.1M for tolerances, appearances, welding procedure specifications, weld quality, and methods used in correcting welding work.

1. Comply with AISC 303 and AISC 360 for bearing, alignment, adequacy of temporary connections, and removal of paint on surfaces adjacent to field welds.
2. Assemble and weld built-up sections by methods that maintain true alignment of axes without exceeding tolerances in AISC 303, "Code of Standard Practice for Steel Buildings and Bridges," for mill material.

3.5 FIELD QUALITY CONTROL

A. Testing Agency: Engage a qualified testing agency to perform tests and inspections.

NOT FOR BIDDING

B. Bolted Connections: Inspect bolted connections according to RCSC's "Specification for Structural Joints Using ASTM A 325 or A 490 Bolts."

C. In addition to visual inspection, test and inspect field-welded shear connectors according to requirements in AWS D1.1/D1.1M for stud welding and as follows:

1. Perform bend tests if visual inspections reveal either a less-than-continuous 360-degree flash or welding repairs to any shear connector.
2. Conduct tests according to requirements in AWS D1.1/D1.1M on additional shear connectors if weld fracture occurs on shear connectors already tested.

3.6 REPAIRS AND PROTECTION

A. Touchup Painting: Immediately after erection, clean exposed areas where primer is damaged or missing and paint with the same material as used for shop painting to comply with SSPC-PA 1 for touching up shop-painted surfaces.

1. Clean and prepare surfaces by SSPC-SP 2 hand-tool cleaning or SSPC-SP 3 power-tool cleaning.

END OF SECTION 051200

NOT FOR BIDDING

SECTION 055000 - METAL FABRICATIONS

PART 1 - GENERAL

1.1 RELATED DOCUMENTS

A. Drawings and general provisions of the Contract, including General and Supplementary Conditions and Division 01 Specification Sections, apply to this section.

1.2 SUMMARY

A. Section Includes:

1. Steel framing and supports for overhead doors.
2. Shelf angles.
3. Metal ladders.
4. Metal bollards.

B. Products furnished, but not installed, under this section include the following:

1. Loose steel lintels.
2. Steel weld plates and angles for casting into concrete for applications where they are not specified in other Sections.

C. Related Requirements:

1. Section 033000 "Cast-in-Place Concrete" for installing anchor bolts, steel pipe sleeves, slotted-channel inserts, wedge-type inserts, and other items cast into concrete.
2. Section 042000 "Unit Masonry" for installing loose lintels, anchor bolts, and other items built into unit masonry.
3. Section 051200 "Structural Steel Framing."

1.3 COORDINATION

A. Coordinate selection of shop primers with topcoats to be applied over them. Comply with paint and coating manufacturers' written recommendations to ensure that shop primers and topcoats are compatible with one another.

B. Coordinate installation of metal fabrications that are anchored to or that receive other work. Furnish setting drawings, templates, and directions for installing anchorages, including sleeves, concrete inserts, anchor bolts, and items with integral anchors, that are to be embedded in concrete or masonry. Deliver such items to Project site in time for installation.

NOT FOR BIDDING

1.4 ACTION SUBMITTALS

A. Shop Drawings: Show fabrication and installation details. Include plans, elevations, sections, and details of metal fabrications and their connections. Show anchorage and accessory items. Provide Shop Drawings for the following:

1. Steel framing and supports for overhead doors.
2. Steel framing and supports for applications where framing and supports are not specified in other Sections.
3. Shelf angles.
4. Metal ladders.
5. Metal bollards.
6. Loose steel lintels.

1.5 INFORMATIONAL SUBMITTALS

A. Qualification Data: For professional engineer.

B. Mill Certificates: Signed by stainless-steel manufacturers, certifying that products furnished comply with requirements.

C. Welding certificates.

D. Paint Compatibility Certificates: From manufacturers of topcoats applied over shop primers, certifying that shop primers are compatible with topcoats.

E. Research/Evaluation Reports: For post-installed anchors, from ICC-ES.

1.6 QUALITY ASSURANCE

A. Welding Qualifications: Qualify procedures and personnel according to AWS D1.1/D1.1M, "Structural Welding Code - Steel."

B. Welding Qualifications: Qualify procedures and personnel according to the following:

1. AWS D1.1/D1.1M, "Structural Welding Code - Steel."
2. AWS D1.2/D1.2M, "Structural Welding Code - Aluminum."
3. AWS D1.6/D1.6M, "Structural Welding Code - Stainless Steel."

1.7 FIELD CONDITIONS

A. Field Measurements: Verify actual locations of walls and other construction contiguous with metal fabrications by field measurements before fabrication.

NOT FOR BIDDING

PART 2 - PRODUCTS

2.1 METALS

A. Metal Surfaces, General: Provide materials with smooth, flat surfaces unless otherwise indicated. For metal fabrications exposed to view in the completed Work, provide materials without seam marks, roller marks, rolled trade names, or blemishes.

B. Steel Plates, Shapes, and Bars: ASTM A 36/A 36M.

C. Steel Tubing: ASTM A 500/A 500M, cold-formed steel tubing.

D. Steel Pipe: ASTM A 53/A 53M, Standard Weight (Schedule 40) unless otherwise indicated.

2.2 FASTENERS

A. General: Unless otherwise indicated, provide Type 304 stainless-steel fasteners for exterior use and zinc-plated fasteners with coating complying with ASTM B 633 or ASTM F 1941 (ASTM F 1941M), Class Fe/Zn 5, at exterior walls. Select fasteners for type, grade, and class required.

B. Steel Bolts and Nuts: Regular hexagon-head bolts, ASTM A 307, Grade A (ASTM F 568M, Property Class 4.6); with hex nuts, ASTM A 563 (ASTM A 563M); and, where indicated, flat washers.

C. Anchor Bolts: ASTM F 1554, Grade 36, of dimensions indicated; with nuts, ASTM A 563 (ASTM A 563M); and, where indicated, flat washers.

1. Hot-dip galvanize or provide mechanically deposited, zinc coating where item being fastened is indicated to be galvanized.

D. Anchors, General: Anchors capable of sustaining, without failure, a load equal to six times the load imposed when installed in unit masonry and four times the load imposed when installed in concrete, as determined by testing according to ASTM E 488/E 488M, conducted by a qualified independent testing agency.

E. Cast-in-Place Anchors in Concrete: Either threaded type or wedge type unless otherwise indicated; galvanized ferrous castings, either ASTM A 47/A 47M malleable iron or ASTM A 27/A 27M cast steel. Provide bolts, washers, and shims as needed, all hot-dip galvanized per ASTM F 2329.

F. Post-Installed Anchors: Torque-controlled expansion anchors or chemical anchors.

1. Material for Interior Locations: Carbon-steel components zinc plated to comply with ASTM B 633 or ASTM F 1941 (ASTM F 1941M), Class Fe/Zn 5, unless otherwise indicated.
2. Material for Exterior Locations and Where Stainless Steel Is Indicated: Alloy Group 1 (A1) stainless-steel bolts, ASTM F 593 (ASTM F 738M), and nuts, ASTM F 594 (ASTM F 836M).

NOT FOR BIDDING

2.3 MISCELLANEOUS MATERIALS

A. Shop Primers: Provide primers that comply with Section 099113 "Exterior Painting," and "Section 099123 Interior Painting".

B. Universal Shop Primer: Fast-curing, lead- and chromate-free, universal modified-alkyd primer complying with MPI#79 and compatible with topcoat.

1. Use primer containing pigments that make it easily distinguishable from zinc-rich primer.

C. Galvanizing Repair Paint: High-zinc-dust-content paint complying with SSPC-Paint 20 and compatible with paints specified to be used over it.

D. Nonshrink, Nonmetallic Grout: Factory-packaged, nonstaining, noncorrosive, nongaseous grout complying with ASTM C 1107/C 1107M. Provide grout specifically recommended by manufacturer for interior and exterior applications.

2.4 FABRICATION, GENERAL

A. Shop Assembly: Preassemble items in the shop to greatest extent possible. Disassemble units only as necessary for shipping and handling limitations. Use connections that maintain structural value of joined pieces. Clearly mark units for reassembly and coordinated installation.

B. Cut, drill, and punch metals cleanly and accurately. Remove burrs and ease edges to a radius of approximately 1/32 inch (1 mm) unless otherwise indicated. Remove sharp or rough areas on exposed surfaces.

C. Form bent-metal corners to smallest radius possible without causing grain separation or otherwise impairing work.

D. Form exposed work with accurate angles and surfaces and straight edges.

E. Weld corners and seams continuously to comply with the following:

1. Use materials and methods that minimize distortion and develop strength and corrosion resistance of base metals.
2. Obtain fusion without undercut or overlap.
3. Remove welding flux immediately.
4. At exposed connections, finish exposed welds and surfaces smooth and blended so no roughness shows after finishing.

F. Form exposed connections with hairline joints, flush and smooth, using concealed fasteners or welds where possible. Where exposed fasteners are required, use Phillips flat-head (countersunk) fasteners unless otherwise indicated. Locate joints where least conspicuous.

G. Fabricate seams and other connections that are exposed to weather in a manner to exclude water. Provide weep holes where water may accumulate.

H. Cut, reinforce, drill, and tap metal fabrications as indicated to receive finish hardware, screws, and similar items.

NOT FOR BIDDING

I. Provide for anchorage of type indicated; coordinate with supporting structure. Space anchoring devices to secure metal fabrications rigidly in place and to support indicated loads.

J. Where units are indicated to be cast into concrete or built into masonry, equip with integrally welded steel strap anchors, 1/8 by 1-1/2 inches (3.2 by 38 mm), with a minimum 6-inch (150-mm) embedment and 2-inch (50-mm) hook, not less than 8 inches (200 mm) from ends and corners of units and 24 inches (600 mm) o.c., unless otherwise indicated.

2.5 MISCELLANEOUS FRAMING AND SUPPORTS

A. General: Provide steel framing and supports not specified in other Sections as needed to complete the Work.

B. Fabricate units from steel shapes, plates, and bars of welded construction unless otherwise indicated. Fabricate to sizes, shapes, and profiles indicated and as necessary to receive adjacent construction.

C. Fabricate steel girders for wood frame construction from continuous steel shapes of sizes indicated.

1. Provide bearing plates welded to beams where indicated.
2. Drill or punch girders and plates for field bolted connections where indicated.
3. Where wood nailers are attached to girders with bolts or lag screws, drill or punch holes at 24 inches (600 mm) o.c.

D. Fabricate steel pipe columns for supporting wood frame construction from steel pipe with steel baseplates and top plates as indicated. Drill or punch baseplates and top plates for anchor and connection bolts and weld to pipe with fillet welds all around. Make welds the same size as pipe wall thickness unless otherwise indicated.

1. Unless otherwise indicated, fabricate from Schedule 40 steel pipe.
2. Unless otherwise indicated, provide 1/2-inch (12.7-mm) baseplates with four 5/8-inch (16-mm) anchor bolts and 1/4-inch (6.4-mm) top plates.

E. Galvanize miscellaneous framing and supports where indicated.

2.6 METAL LADDERS

A. General:

1. Comply with ANSI A14.3.

B. Steel Ladders:

1. Space siderails 16 inches (406 mm) apart unless otherwise indicated.
2. Siderails: Continuous, 3/8-by-2-1/2-inch (9.5-by-64-mm) steel flat bars, with eased edges.
3. Rungs: 3/4-inch- (19-mm-) diameter steel bars.
4. Fit rungs in centerline of siderails; plug-weld and grind smooth on outer rail faces.

NOT FOR BIDDING

5. Support each ladder at top and bottom and not more than 60 inches (1500 mm) o.c. with welded or bolted steel brackets.
6. Galvanize and prime ladders, including brackets.

2.7 METAL BOLLARDS

A. Fabricate metal bollards from Schedule 40 steel pipe.

1. Cap bollards with 1/4-inch- (6.4-mm-) thick steel plate.

B. Fabricate sleeves for bollard anchorage from steel pipe or tubing with 1/4-inch- (6.4-mm-) thick steel plate welded to bottom of sleeve. Make sleeves not less than 8 inches (200 mm) deep and 3/4 inch (19 mm) larger than OD of bollard.

C. Galvanize and prime bollards.

2.8 LOOSE STEEL LINTELS

A. Fabricate loose steel lintels from steel angles and shapes of size indicated for openings and recesses in masonry walls and partitions at locations indicated. Fabricate in single lengths for each opening unless otherwise indicated. Weld adjoining members together to form a single unit where indicated.

B. Size loose lintels to provide bearing length at each side of openings equal to 1/12 of clear span, but not less than 8 inches (200 mm) unless otherwise indicated.

C. Galvanize loose steel lintels located in exterior walls.

2.9 STEEL WELD PLATES AND ANGLES

A. Provide steel weld plates and angles not specified in other Sections, for items supported from concrete construction as needed to complete the Work. Provide each unit with no fewer than two integrally welded steel strap anchors for embedding in concrete.

2.10 FINISHES, GENERAL

A. Finish metal fabrications after assembly.

B. Finish exposed surfaces to remove tool and die marks and stretch lines, and to blend into surrounding surfaces.

2.11 STEEL AND IRON FINISHES

A. Galvanizing: Hot-dip galvanize items as indicated to comply with ASTM A 153/A 153M for steel and iron hardware and with ASTM A 123/A 123M for other steel and iron products.

NOT FOR BIDDING

1. Do not quench or apply post galvanizing treatments that might interfere with paint adhesion.

B. Preparation for Shop Priming Galvanized Items: After galvanizing, thoroughly clean railings of grease, dirt, oil, flux, and other foreign matter, and treat with metallic phosphate process.

C. Shop Priming: Apply shop primer to comply with SSPC-PA 1, "Paint Application Specification No. 1: Shop, Field, and Maintenance Painting of Steel," for shop painting.

1. Stripe paint corners, crevices, bolts, welds, and sharp edges.

PART 3 - EXECUTION

3.1 INSTALLATION, GENERAL

A. Cutting, Fitting, and Placement: Perform cutting, drilling, and fitting required for installing metal fabrications. Set metal fabrications accurately in location, alignment, and elevation; with edges and surfaces level, plumb, true, and free of rack; and measured from established lines and levels.

B. Fit exposed connections accurately together to form hairline joints. Weld connections that are not to be left as exposed joints but cannot be shop welded because of shipping size limitations. Do not weld, cut, or abrade surfaces of exterior units that have been hot-dip galvanized after fabrication and are for bolted or screwed field connections.

C. Field Welding: Comply with the following requirements:

1. Use materials and methods that minimize distortion and develop strength and corrosion resistance of base metals.
2. Obtain fusion without undercut or overlap.
3. Remove welding flux immediately.
4. At exposed connections, finish exposed welds and surfaces smooth and blended so no roughness shows after finishing and contour of welded surface matches that of adjacent surface.

D. Fastening to In-Place Construction: Provide anchorage devices and fasteners where metal fabrications are required to be fastened to in-place construction. Provide threaded fasteners for use with concrete and masonry inserts, toggle bolts, through bolts, lag screws, wood screws, and other connectors.

E. Provide temporary bracing or anchors in formwork for items that are to be built into concrete, masonry, or similar construction.

3.2 INSTALLING MISCELLANEOUS FRAMING AND SUPPORTS

A. General: Install framing and supports to comply with requirements of items being supported, including manufacturers' written instructions and requirements indicated on Shop Drawings.

B. Anchor supports for ceiling hung toilet partitions, operable partitions, overhead doors, securely to, and rigidly brace from, building structure.

NOT FOR BIDDING

C. Support steel girders on solid grouted masonry, concrete, or steel pipe columns. Secure girders with anchor bolts embedded in grouted masonry or concrete or with bolts through top plates of pipe columns.

1. Where grout space under bearing plates is indicated for girders supported on concrete or masonry, install as specified in "Installing Bearing and Leveling Plates" Article.

D. Install pipe columns on concrete footings with grouted baseplates. Position and grout column baseplates as specified in "Installing Bearing and Leveling Plates" Article.

1. Grout baseplates of columns supporting steel girders after girders are installed and leveled.

3.3 INSTALLING METAL BOLLARDS

A. Fill metal-capped bollards solidly with concrete and allow concrete to cure seven days before installing.

1. Do not fill removable bollards with concrete.

2. Embed anchor bolts at least 4 inches (100 mm) in concrete.

B. Anchor bollards in place with concrete footings. Center and align bollards in holes 3 inches (75 mm) above bottom of excavation. Place concrete and vibrate or tamp for consolidation. Support and brace bollards in position until concrete has cured.

C. Fill bollards solidly with concrete, mounding top surface to shed water.

1. Do not fill removable bollards with concrete.

D. Plastic covers:
1. Material: 1/4“ wall thickness LDPE or HDPE plastic with ultraviolet and antistatic additives.
2. Size: Size to match bollard diameter and height.
3. Colors: Provide assorted colors, as selected by Architect, from manufacturer’s full range of colors.

3.4 ADJUSTING AND CLEANING

A. Touchup Painting: Immediately after erection, clean field welds, bolted connections, and abraded areas. Paint uncoated and abraded areas with the same material as used for shop painting to comply with SSPC-PA 1 for touching up shop-painted surfaces.

1. Apply by brush or spray to provide a minimum 2.0-mil (0.05-mm) dry film thickness.

B. Galvanized Surfaces: Clean field welds, bolted connections, and abraded areas and repair galvanizing to comply with ASTM A 780/A 780M.

END OF SECTION 055000

NOT FOR BIDDING

SECTION 055213 - PIPE AND TUBE RAILINGS

PART 1 - GENERAL

1.1 RELATED DOCUMENTS

A. Drawings and general provisions of the Contract, including General and Supplementary Conditions and Division 01 Specification Sections, apply to this section.

1.2 SUMMARY

A. Section Includes:

1. Aluminum pipe and tube railings.

B. Related Sections:

1. Division 06 Section "Rough Carpentry" for wood blocking for anchoring railings.

1.3 PERFORMANCE REQUIREMENTS

A. Delegated Design: Design railings, including comprehensive engineering analysis by a qualified professional engineer, using performance requirements and design criteria indicated.

B. General: In engineering railings to withstand structural loads indicated, determine allowable design working stresses of railing materials based on the following:

1. Steel: 72 percent of minimum yield strength.
2. Aluminum: The lesser of minimum yield strength divided by 1.65 or minimum ultimate tensile strength divided by 1.95.
3. Stainless Steel: 60 percent of minimum yield strength.

C. Structural Performance: Railings shall withstand the effects of gravity loads and the following loads and stresses within limits and under conditions indicated:

1. Handrails and Top Rails of Guards:

a. Uniform load of 50 lbf/ ft. (0.73 kN/m) applied in any direction.
b. Concentrated load of 200 lbf (0.89 kN) applied in any direction.
c. Uniform and concentrated loads need not be assumed to act concurrently.

2. Infill of Guards:

a. Concentrated load of 50 lbf (0.22 kN) applied horizontally on an area of 1 sq. ft. (0.093 sq. m).
b. Infill load and other loads need not be assumed to act concurrently.

NOT FOR BIDDING

D. Thermal Movements: Allow for thermal movements from ambient and surface temperature changes acting on exterior metal fabrications by preventing buckling, opening of joints, overstressing of components, failure of connections, and other detrimental effects.

1. Temperature Change: 120 deg F (67 deg C), ambient; 180 deg F (100 deg C), material surfaces.

E. Control of Corrosion: Prevent galvanic action and other forms of corrosion by insulating metals and other materials from direct contact with incompatible materials.

1.4 ACTION SUBMITTALS

A. Product Data: For the following:

1. Manufacturer's product lines of mechanically connected railings.
2. Railing brackets.
3. Grout, anchoring cement, and paint products.

B. Shop Drawings: Include plans, elevations, sections, details, and attachments to other work.

C. Delegated-Design Submittal: For installed products indicated to comply with performance requirements and design criteria, including analysis data signed and sealed by the qualified professional engineer responsible for their preparation.

1.5 INFORMATIONAL SUBMITTALS

A. Mill Certificates: Signed by manufacturers of stainless-steel products certifying that products furnished comply with requirements.

B. Welding certificates.

C. Paint Compatibility Certificates: From manufacturers of topcoats applied over shop primers certifying that shop primers are compatible with topcoats.

D. Product Test Reports: Based on evaluation of comprehensive tests performed by a qualified testing agency, according to ASTM E 894 and ASTM E 935.

1.6 QUALITY ASSURANCE

A. Source Limitations: Obtain each type of railing from single source from single manufacturer.

B. Welding Qualifications: Qualify procedures and personnel according to AWS D1.1/D1.1M, "Structural Welding Code - Steel."

1.7 PROJECT CONDITIONS

A. Field Measurements: Verify actual locations of walls and other construction contiguous with metal fabrications by field measurements before fabrication.

NOT FOR BIDDING

1.8 COORDINATION AND SCHEDULING

A. Coordinate selection of shop primers with topcoats to be applied over them. Comply with paint and coating manufacturers' written recommendations to ensure that shop primers and topcoats are compatible with one another.

B. Coordinate installation of anchorages for railings. Furnish setting drawings, templates, and directions for installing anchorages, including sleeves, concrete inserts, anchor bolts, and items with integral anchors, that are to be embedded in concrete or masonry. Deliver such items to Project site in time for installation.

C. Schedule installation so wall attachments are made only to completed walls. Do not support railings temporarily by any means that do not satisfy structural performance requirements.

PART 2 - PRODUCTS

2.1 METALS, GENERAL

A. Metal Surfaces, General: Provide materials with smooth surfaces, without seam marks, roller marks, rolled trade names, stains, discolorations, or blemishes.

B. Brackets, Flanges, and Anchors: Cast or formed metal of same type of material and finish as supported rails unless otherwise indicated.

2.2 MANUFACTURERS

A. Aluminum Pipe and Tube Railings

1. Manufacturers: Subject to compliance with requirements, available manufacturers offering products that may be incorporated into the Work include, but are not limited to the following:

a. ATR Technologies, Inc.
b. Blum, Julius & Co., Inc.
c. Brauer, J. G., Company; The Wagner Companies.
d. Craftsmaster Corp.
e. Hollaender Manufacturing Company.
f. Kee Industrial Products, Inc.
g. Moultrie Manufacturing Corporation.
h. Sterling Dula Architectural Products, Inc. / KaneSterling.
i. Superior Aluminum Products, Inc.
j. Thompson Fabricating, LLC.
k. TT Tech, Inc.
l. Tubular Specialties Manufacturing, Inc.
m. Tuttle Railing Systems.
n. Wagner, R & B, Inc.

NOT FOR BIDDING

2.3 ALUMINUM

A. Aluminum, General: Provide alloy and temper recommended by aluminum producer and finisher for type of use and finish indicated, and with not less than the strength and durability properties of alloy and temper designated below for each aluminum form required.

B. Extruded Bars and Tubing: ASTM B 221 (ASTM B 221M), Alloy 6063-T5/T52.

C. Extruded Structural Pipe and Round Tubing: ASTM B 429/B 429M, Alloy 6063-T6.

1. Provide Standard Weight (Schedule 40) pipe unless otherwise indicated.

D. Drawn Seamless Tubing: ASTM B 210 (ASTM B 210M), Alloy 6063-T832.

E. Plate and Sheet: ASTM B 209 (ASTM B 209M), Alloy 6061-T6.

F. Die and Hand Forgings: ASTM B 247 (ASTM B 247M), Alloy 6061-T6.

G. Castings: ASTM B 26/B 26M, Alloy A356.0-T6.

2.4 FASTENERS

A. General: Provide the following:

1. Aluminum Railings: Stainless-steel fasteners.
2. Provide exposed fasteners with finish matching appearance, including color and texture, of railings.

B. Fasteners for Anchoring Railings to Other Construction: Select fasteners of type, grade, and class required to produce connections suitable for anchoring railings to other types of construction indicated and capable of withstanding design loads.

C. Fasteners for Interconnecting Railing Components:

1. Provide Phillips, square or hex socket flat-head machine screws for exposed fasteners unless otherwise indicated.

D. Post-Installed Anchors: Torque-controlled expansion anchors or chemical anchors capable of sustaining, without failure, a load equal to six times the load imposed when installed in unit masonry and four times the load imposed when installed in concrete, as determined by testing according to ASTM E 488, conducted by a qualified independent testing agency.

1. Material for Interior Locations: Carbon-steel components zinc-plated to comply with ASTM B 633 or ASTM F 1941 (ASTM F 1941M), Class Fe/Zn 5, unless otherwise indicated.

2.5 MISCELLANEOUS MATERIALS

A. Welding Rods and Bare Electrodes: Select according to AWS specifications for metal alloy welded.

NOT FOR BIDDING

B. Universal Shop Primer: Fast-curing, lead- and chromate-free, universal modified-alkyd primer complying with MPI#79 and compatible with topcoat.

1. Use primer containing pigments that make it easily distinguishable from zinc-rich primer.

C. Nonshrink, Nonmetallic Grout: Factory-packaged, nonstaining, noncorrosive, nongaseous grout complying with ASTM C 1107. Provide grout specifically recommended by manufacturer for interior and exterior applications.

D. Anchoring Cement: Factory-packaged, nonshrink, nonstaining, hydraulic-controlled expansion cement formulation for mixing with water at Project site to create pourable anchoring, patching, and grouting compound.

2.6 FABRICATION

A. General: Fabricate railings to comply with requirements indicated for design, dimensions, member sizes and spacing, details, finish, and anchorage, but not less than that required to support structural loads.

B. Assemble railings in the shop to greatest extent possible to minimize field splicing and assembly. Disassemble units only as necessary for shipping and handling limitations. Clearly mark units for reassembly and coordinated installation. Use connections that maintain structural value of joined pieces.

C. Cut, drill, and punch metals cleanly and accurately. Remove burrs and ease edges to a radius of approximately 1/32 inch (1 mm) unless otherwise indicated. Remove sharp or rough areas on exposed surfaces.

D. Form work true to line and level with accurate angles and surfaces.

E. Fabricate connections that will be exposed to weather in a manner to exclude water. Provide weep holes where water may accumulate.

F. Cut, reinforce, drill, and tap as indicated to receive finish hardware, screws, and similar items.

G. Connections: Fabricate railings with non-welded connections unless otherwise indicated.

A. Nonwelded Connections: Connect members with concealed mechanical fasteners and fittings. Fabricate members and fittings to produce flush, smooth, rigid, hairline joints.

1. Fabricate splice joints for field connection using an epoxy structural adhesive if this is manufacturer's standard splicing method.

B. Form Changes in Direction as Follows:

1. By inserting prefabricated elbow fittings.
2. By inserting prefabricated flush-elbow fittings.
3. By inserting prefabricated elbow fittings of radius indicated].

C. Close exposed ends of railing members with prefabricated end fittings.

NOT FOR BIDDING

D. Provide wall returns at ends of wall-mounted handrails unless otherwise indicated. Close ends of returns unless clearance between end of rail and wall is 1/4 inch (6 mm) or less.

E. Brackets, Flanges, Fittings, and Anchors: Provide wall brackets, flanges, miscellaneous fittings, and anchors to interconnect railing members to other work unless otherwise indicated.

1. At brackets and fittings fastened to plaster or gypsum board partitions provide crush-resistant fillers, or other means to transfer loads through wall finishes to structural supports and prevent bracket or fitting rotation and crushing of substrate.

F. Provide inserts and other anchorage devices for connecting railings to concrete or masonry work. Fabricate anchorage devices capable of withstanding loads imposed by railings. Coordinate anchorage devices with supporting structure.

2.7 FINISHES, GENERAL

A. Comply with NAAMM's "Metal Finishes Manual for Architectural and Metal Products" for recommendations for applying and designating finishes.

B. Protect mechanical finishes on exposed surfaces from damage by applying a strippable, temporary protective covering before shipping.

C. Appearance of Finished Work: Variations in appearance of abutting or adjacent pieces are acceptable if they are within one-half of the range of approved Samples. Noticeable variations in the same piece are not acceptable. Variations in appearance of other components are acceptable if they are within the range of approved Samples and are assembled or installed to minimize contrast.

D. Provide exposed fasteners with finish matching appearance, including color and texture, of railings.

2.8 ALUMINUM FINISHES

A. Appearance of Finished Work: Variations in appearance of abutting or adjacent pieces are acceptable if they are within one-half of the range of approved Samples. Noticeable variations in the same piece are unacceptable. Variations in appearance of other components are acceptable if they are within the range of approved Samples and are assembled or installed to minimize contrast.

B. Clear Anodic Finish: AAMA 611, AA-M12C22A41.

PART 3 - EXECUTION

3.1 EXAMINATION

A. Examine plaster and gypsum board assemblies, where reinforced to receive anchors, to verify that locations of concealed reinforcements have been clearly marked for Installer. Locate reinforcements and mark locations if not already done.

NOT FOR BIDDING

3.2 INSTALLATION, GENERAL

A. Fit exposed connections together to form tight, hairline joints.

B. Perform cutting, drilling, and fitting required for installing railings. Set railings accurately in location, alignment, and elevation; measured from established lines and levels and free of rack.

1. Do not weld, cut, or abrade surfaces of railing components that have been coated or finished after fabrication and that are intended for field connection by mechanical or other means without further cutting or fitting.
2. Set posts plumb within a tolerance of 1/16 inch in 3 feet (2 mm in 1 m).
3. Align rails so variations from level for horizontal members and variations from parallel with rake of steps and ramps for sloping members do not exceed 1/4 inch in 12 feet (5 mm in 3 m).

C. Corrosion Protection: Coat concealed surfaces of aluminum that will be in contact with grout, concrete, masonry, wood, or dissimilar metals, with a heavy coat of bituminous paint.

D. Adjust railings before anchoring to ensure matching alignment at abutting joints.

E. Fastening to In-Place Construction: Use anchorage devices and fasteners where necessary for securing railings and for properly transferring loads to in-place construction.

3.3 RAILING CONNECTIONS

A. Nonwelded Connections: Use mechanical or adhesive joints for permanently connecting railing components. Seal recessed holes of exposed locking screws using plastic cement filler colored to match finish of railings.

B. Expansion Joints: Install expansion joints at locations indicated but not farther apart than required to accommodate thermal movement. Provide slip-joint internal sleeve extending 2 inches (50 mm) beyond joint on either side, fasten internal sleeve securely to one side, and locate joint within 6 inches (150 mm) of post.

3.4 ANCHORING POSTS

A. Attach posts to walls with wall brackets, except where end flanges are used. Locate brackets as indicated or, if not indicated, at spacing required to support structural loads.

B. Secure wall brackets and railing end flanges to building construction as follows:

1. For concrete and solid masonry anchorage, use drilled-in expansion shields and hanger or lag bolts.
2. For hollow masonry anchorage, use toggle bolts.

C. Install removable railing sections, where indicated, in slip-fit metal sockets cast in concrete.

NOT FOR BIDDING

3.5 ATTACHING RAILINGS

A. Anchor railing ends at walls with round flanges anchored to wall construction and connected to railing ends using nonwelded connections.

B. Anchor railing ends to metal surfaces with flanges bolted to metal surfaces and connected to railing ends using nonwelded connections.

C. Attach railings to wall with wall brackets, except where end flanges are used. Provide brackets with 1-1/2-inch (38-mm) clearance from inside face of handrail and finished wall surface. Locate brackets as indicated or, if not indicated, at spacing required to support structural loads.

D. Secure wall brackets and railing end flanges to building construction as follows:

1. For concrete and solid masonry anchorage, use drilled-in expansion shields and hanger or lag bolts.
2. For hollow masonry anchorage, use toggle bolts.

3.6 ADJUSTING AND CLEANING

A. Clean aluminum and stainless steel by washing thoroughly with clean water and soap and rinsing with clean water.

3.7 PROTECTION

A. Protect finishes of railings from damage during construction period with temporary protective coverings approved by railing manufacturer. Remove protective coverings at time of Substantial Completion.

END OF SECTION 055213

NOT FOR BIDDING

SECTION 061000 - ROUGH CARPENTRY

PART 1 - GENERAL

1.1 RELATED DOCUMENTS

A. Drawings and general provisions of the Contract, including General and Supplementary Conditions and Division 01 Specification Sections, apply to this section.

1.2 SUMMARY

A. Section Includes:

1. Framing with dimension lumber.
2. Framing with engineered wood products.
3. Wood furring.
4. Wood blocking, cants, and nailers.
5. Plywood backing panels.
6. Rooftop equipment bases and support curbs.

B. Related Requirements:
1. Section 061600 "Sheathing" for sheathing.
2. Section 061753 "Shop-Fabricated Wood Trusses" for wood trusses made from dimension lumber.
3. Section 313116 "Termite Control" for site application of borate treatment to wood framing.

1.3 DEFINITIONS

A. Boards or Strips: Lumber of less than 2 inches nominal (38 mm actual) size in least dimension.

B. Dimension Lumber: Lumber of 2 inches nominal (38 mm actual) size or greater but less than 5 inches nominal (114 mm actual) size in least dimension.

C. Exposed Framing: Framing not concealed by other construction.

D. OSB: Oriented strand board.

E. Timber: Lumber of 5 inches nominal (114 mm actual) size or greater in least dimension.

1.4 ACTION SUBMITTALS

A. Product Data: For each type of process and factory-fabricated product. Indicate component materials and dimensions and include construction and application details.

NOT FOR BIDDING

1. Include data for wood-preservative treatment from chemical treatment manufacturer and certification by treating plant that treated materials comply with requirements. Indicate type of preservative used and net amount of preservative retained.
2. Include data for fire-retardant treatment from chemical treatment manufacturer and certification by treating plant that treated materials comply with requirements. Include physical properties of treated materials based on testing by a qualified independent testing agency.
3. For fire-retardant treatments, include physical properties of treated lumber both before and after exposure to elevated temperatures, based on testing by a qualified independent testing agency according to ASTM D 5664.
4. For products receiving a waterborne treatment, include statement that moisture content of treated materials was reduced to levels specified before shipment to Project site.

B. Fastener Patterns: Full-size templates for fasteners in exposed framing.

1.5 INFORMATIONAL SUBMITTALS

A. Material Certificates: For dimension lumber specified to comply with minimum allowable unit stresses. Indicate species and grade selected for each use and design values approved by the ALSC Board of Review.

B. Evaluation Reports: For the following, from ICC-ES:

1. Wood-preservative-treated wood.
2. Fire-retardant-treated wood.
3. Engineered wood products.
4. Power-driven fasteners.
5. Post-installed anchors.
6. Metal framing anchors.

1.6 QUALITY ASSURANCE

A. Testing Agency Qualifications: For testing agency providing classification marking for fire-retardant treated material, an inspection agency acceptable to authorities having jurisdiction that periodically performs inspections to verify that the material bearing the classification marking is representative of the material tested.

1.7 DELIVERY, STORAGE, AND HANDLING

A. Stack wood products flat with spacers beneath and between each bundle to provide air circulation. Protect wood products from weather by covering with waterproof sheeting, securely anchored. Provide for air circulation around stacks and under coverings.

NOT FOR BIDDING

PART 2 - PRODUCTS

2.1 WOOD PRODUCTS, GENERAL

A. Lumber: DOC PS 20 and applicable rules of grading agencies indicated. If no grading agency is indicated, comply with the applicable rules of any rules-writing agency certified by the ALSC Board of Review. Grade lumber by an agency certified by the ALSC Board of Review to inspect and grade lumber under the rules indicated.

1. Factory mark each piece of lumber with grade stamp of grading agency.
2. For exposed lumber indicated to receive a stained or natural finish, mark grade stamp on end or back of each piece or omit grade stamp and provide certificates of grade compliance issued by grading agency.
3. Dress lumber, S4S, unless otherwise indicated.

B. Maximum Moisture Content of Lumber: 19 percent unless otherwise indicated.

C. Engineered Wood Products: Acceptable to authorities having jurisdiction and for which current model code research or evaluation reports exist that show compliance with building code in effect for Project.

1. Allowable design stresses, as published by manufacturer, shall meet or exceed those indicated. Manufacturer's published values shall be determined from empirical data or by rational engineering analysis and demonstrated by comprehensive testing performed by a qualified independent testing agency.

2.2 WOOD-PRESERVATIVE-TREATED LUMBER

A. Preservative Treatment by Pressure Process: AWPA U1; Use Category UC2 for interior construction not in contact with ground, Use Category UC3b for exterior construction not in contact with ground, and Use Category UC4a for items in contact with ground.

1. Preservative Chemicals: Acceptable to authorities having jurisdiction and containing no arsenic or chromium.
2. For exposed items indicated to receive a stained or natural finish, chemical formulations shall not require incising, contain colorants, bleed through, or otherwise adversely affect finishes.

B. Kiln-dry lumber after treatment to a maximum moisture content of 19 percent. Do not use material that is warped or that does not comply with requirements for untreated material.

C. Mark lumber with treatment quality mark of an inspection agency approved by the ALSC Board of Review.

D. Application: Treat items indicated on Drawings, and the following:

1. Wood cants, nailers, curbs, equipment support bases, blocking, stripping, and similar members in connection with roofing, flashing, vapor barriers, and waterproofing.

NOT FOR BIDDING

2. Wood sills, sleepers, blocking, stripping, and similar concealed members in contact with masonry or concrete.

2.3 FIRE-RETARDANT-TREATED MATERIALS

A. General: Where fire-retardant-treated materials are indicated, materials shall comply with requirements in this article, that are acceptable to authorities having jurisdiction, and with fire-test-response characteristics specified as determined by testing identical products per test method indicated by a qualified testing agency.

B. Fire-Retardant-Treated Lumber and Plywood by Pressure Process: Products with a flame-spread index of 25 or less when tested according to ASTM E 84, and with no evidence of significant progressive combustion when the test is extended an additional 20 minutes, and with the flame front not extending more than 10.5 feet (3.2 m) beyond the centerline of the burners at any time during the test.

1. Treatment shall not promote corrosion of metal fasteners.
2. Exterior Type: Treated materials shall comply with requirements specified above for fire-retardant-treated lumber and plywood by pressure process after being subjected to accelerated weathering according to ASTM D 2898. Use for exterior locations and where indicated.
3. Interior Type A: Treated materials shall have a moisture content of 28 percent or less when tested according to ASTM D 3201 at 92 percent relative humidity. Use where exterior type is not indicated.
4. Design Value Adjustment Factors: Treated lumber shall be tested according to ASTM D 5664 and design value adjustment factors shall be calculated according to ASTM D 6841. For enclosed roof framing, framing in attic spaces, and where high temperature fire-retardant treatment is indicated, provide material with adjustment factors of not less than 0.85 modulus of elasticity and 0.75 for extreme fiber in bending for Project's climatological zone.

C. Kiln-dry lumber after treatment to maximum moisture content of 19 percent.

D. Identify fire-retardant-treated wood with appropriate classification marking of qualified testing agency.

E. For exposed items indicated to receive a stained or natural finish, chemical formulations shall not bleed through, contain colorants, or otherwise adversely affect finishes.

F. Application: Treat all rough carpentry unless otherwise indicated.
1. Concealed blocking.
2. Framing for non-load-bearing partitions.
3. Framing for non-load-bearing exterior walls.
4. Roof construction.

2.4 DIMENSION LUMBER FRAMING

A. Non-Load-Bearing Interior Partitions: Construction or No. 2 grade.

NOT FOR BIDDING

1. Application: All interior partitions.
2. Species:
   a. Spruce-pine-fir (south); NeLMA, WCLIB, or WWPA.

2.5 ENGINEERED WOOD PRODUCTS

A. Source Limitations: Obtain each type of engineered wood product from single source from a single manufacturer.

B. Laminated-Veneer Lumber: Structural composite lumber made from wood veneers with grain primarily parallel to member lengths, evaluated and monitored according to ASTM D 5456 and manufactured with an exterior-type adhesive complying with ASTM D 2559.
   1. Extreme Fiber Stress in Bending, Edgewise: 2600 psi (17.9 MPa) depth members.
   2. Modulus of Elasticity, Edgewise: 1,900,000 psi (12 400 MPa)

2.6 MISCELLANEOUS LUMBER

A. General: Provide miscellaneous lumber indicated and lumber for support or attachment of other construction, including the following:

   1. Blocking.
   2. Nailers.
   3. Rooftop equipment bases and support curbs.
   4. Furring.
   5. Cants.

B. Dimension Lumber Items: Construction or No. 2 grade lumber of:
   1. Spruce-pine-fir (south); NeLMA, WCLIB, or WWPA.

C. For blocking not used for attachment of other construction, Utility, Stud, or No. 3 grade lumber of any species may be used provided that it is cut and selected to eliminate defects that will interfere with its attachment and purpose.

D. For blocking and nailers used for attachment of other construction, select and cut lumber to eliminate knots and other defects that will interfere with attachment of other work.

E. For furring strips for installing plywood or hardboard paneling, select boards with no knots capable of producing bent over nails and damage to paneling.

2.7 PLYWOOD BACKING PANELS

A. Equipment Backing Panels: Plywood, DOC PS 1, Exterior, A-C in thickness indicated or, if not indicated, not less than 3/4-inch (19-mm) nominal thickness.

2.8 FASTENERS

A. General: Fasteners shall be of size and type indicated and shall comply with requirements specified in this article for material and manufacture.

NOT FOR BIDDING

1. Where rough carpentry is exposed to weather, in ground contact, pressure-preservative treated, or in area of high relative humidity, provide fasteners of Type 304 stainless steel.

B. Nails, Brads, and Staples: ASTM F 1667.

C. Power-Driven Fasteners: Fastener systems with an evaluation report acceptable to authorities having jurisdiction, based on ICC-ES AC70.

2.9 MISCELLANEOUS MATERIALS

A. Sill-Sealer Gaskets: Glass-fiber-resilient insulation, fabricated in strip form, for use as a sill sealer; 1-inch (25-mm) nominal thickness, compressible to 1/32 inch (0.8 mm); selected from manufacturer's standard widths to suit width of sill members indicated.

B. Sill-Sealer Gaskets: Closed-cell neoprene foam, 1/4 inch (6.4 mm) thick, selected from manufacturer's standard widths to suit width of sill members indicated.

C. Water-Repellent Preservative: NWWDA-tested and -accepted formulation containing 3-iodo-2-propynyl butyl carbamate, combined with an insecticide containing chloropyrifos as its active ingredient.

PART 3 - EXECUTION

3.1 INSTALLATION, GENERAL

A. Framing Standard: Comply with AF&PA's WCD 1, "Details for Conventional Wood Frame Construction," unless otherwise indicated.

B. Framing with Engineered Wood Products: Install engineered wood products to comply with manufacturer's written instructions.

C. Set rough carpentry to required levels and lines, with members plumb, true to line, cut, and fitted. Fit rough carpentry accurately to other construction. Locate nailers, blocking, and similar supports to comply with requirements for attaching other construction.

D. Install sill sealer gasket to form continuous seal between sill plates and foundation walls.

E. Do not splice structural members between supports unless otherwise indicated.

F. Provide blocking and framing as indicated and as required to support facing materials, fixtures, specialty items, and trim.

1. Provide metal clips for fastening gypsum board or lath at corners and intersections where framing or blocking does not provide a surface for fastening edges of panels. Space clips not more than 16 inches (406 mm) o.c.

G. Provide fire blocking in furred spaces, stud spaces, and other concealed cavities as indicated and as follows:

NOT FOR BIDDING

1. Fire block furred spaces of walls, at each floor level, at ceiling, and at not more than 96 inches (2438 mm) o.c. with solid wood blocking or noncombustible materials accurately fitted to close furred spaces.
2. Fire block concealed spaces of wood-framed walls and partitions at each floor level, at ceiling line of top story, and at not more than 96 inches (2438 mm) o.c. Where fire blocking is not inherent in framing system used, provide closely fitted solid wood blocks of same width as framing members and 2-inch nominal (38-mm actual) thickness.
3. Fire block concealed spaces between floor sleepers with same material as sleepers to limit concealed spaces to not more than 100 sq. ft. (9.3 sq. m) and to solidly fill space below partitions.
4. Fire block concealed spaces behind combustible cornices and exterior trim at not more than 20 feet (6 m) o.c.

H. Sort and select lumber so that natural characteristics do not interfere with installation or with fastening other materials to lumber. Do not use materials with defects that interfere with function of member or pieces that are too small to use with minimum number of joints or optimum joint arrangement.

I. Comply with AWPA M4 for applying field treatment to cut surfaces of preservative-treated lumber.

1. Use inorganic boron for items that are continuously protected from liquid water.
2. Use copper naphthenate for items not continuously protected from liquid water.

J. Where wood-preservative-treated lumber is installed adjacent to metal decking, install continuous flexible flashing separator between wood and metal decking.

K. Securely attach rough carpentry work to substrate by anchoring and fastening as indicated, complying with the following:

1. Table 2304.9.1, "Fastening Schedule," in ICC's International Building Code (IBC).
2. Table R602.3(1), "Fastener Schedule for Structural Members," and Table R602.3(2), "Alternate Attachments," in ICC's International Residential Code for One- and Two-Family Dwellings.
3. ICC-ES evaluation report for fastener.

L. Use steel common nails unless otherwise indicated. Select fasteners of size that will not fully penetrate members where opposite side will be exposed to view or will receive finish materials. Make tight connections between members. Install fasteners without splitting wood. Drive nails snug but do not countersink nail heads unless otherwise indicated.

3.2 WOOD BLOCKING AND NAILER INSTALLATION

A. Install where indicated and where required for attaching other work. Form to shapes indicated and cut as required for true line and level of attached work. Coordinate locations with other work involved.

B. Attach items to substrates to support applied loading. Recess bolts and nuts flush with surfaces unless otherwise indicated.

NOT FOR BIDDING

C. Provide permanent grounds of dressed, pressure-preservative-treated, key-beveled lumber not less than 1-1/2 inches (38 mm) wide and of thickness required to bring face of ground to exact thickness of finish material. Remove temporary grounds when no longer required.

3.3 WOOD FURRING INSTALLATION

A. Install level and plumb with closure strips at edges and openings. Shim with wood as required for tolerance of finish work.

B. Furring to Receive Plywood, Sheathing, or Hardboard Panels: Install 2-by-4-inch nominal- (38-by-76-mm actual-) size furring vertically at 16 inches (406 mm) o.c.

C. Furring to Receive Gypsum Board: Install 1-by-2-inch nominal- (19-by-38-mm actual-) size furring vertically at 16 inches (406 mm) o.c.

3.4 WALL AND PARTITION FRAMING INSTALLATION

A. General: Provide single bottom plate and double top plates using members of 2-inch nominal (38-mm actual) thickness whose widths equal that of studs, except single top plate may be used for non-load-bearing partitions. Fasten plates to supporting construction unless otherwise indicated.
   1. For interior partitions and walls, provide size wood studs spaced 16 inches o.c. unless otherwise indicated.
   2. Provide continuous horizontal blocking at midheight of partitions more than 96 inches (2438 mm) high, using members of 2-inch nominal (38-mm actual) thickness and of same width as wall or partitions.

B. Construct corners and intersections with three or more studs, except that two studs may be used for interior non-load-bearing partitions.

C. Frame openings with multiple studs and headers. Provide nailed header members of thickness equal to width of studs. Support headers on jamb studs.

   1. For non-load-bearing partitions, provide double-jamb studs and headers not less than 4-inch nominal (89-mm actual) depth for openings 48 inches (1200 mm) and less in width, 6-inch nominal (140-mm actual) depth for openings 48 to 72 inches (1200 to 1800 mm) in width, 8-inch nominal (184-mm actual) depth for openings 72 to 120 inches (1800 to 3000 mm) in width, and not less than 10-inch nominal (235-mm actual) depth for openings 10 to 12 feet (3 to 3.6 m) in width.

3.5 CEILING JOIST FRAMING INSTALLATION

A. Ceiling Joists: Install with crown edge up and complying with requirements specified above for floor joists. Face nail to ends of parallel rafters.

   1. Where ceiling joists are at right angles to rafters, provide additional short joists parallel to rafters from wall plate to first joist; nail to ends of rafters and to top plate, and nail to first joist or anchor with framing anchors or metal straps. Provide 1-by-8-inch nominal- (19-

NOT FOR BIDDING

by-184-mm actual-) size or 2-by-4-inch nominal- (38-by-89-mm actual-) size stringers spaced 48 inches (1200 mm) o.c. crosswise over main ceiling joists.

B. Provide special framing as indicated for eaves, overhangs, dormers, and similar conditions if any.

3.6 PROTECTION

A. Protect wood that has been treated with inorganic boron (SBX) from weather. If, despite protection, inorganic boron-treated wood becomes wet, apply EPA-registered borate treatment. Apply borate solution by spraying to comply with EPA-registered label.

B. Protect rough carpentry from weather. If, despite protection, rough carpentry becomes wet enough that moisture content exceeds that specified, apply EPA-registered borate treatment. Apply borate solution by spraying to comply with EPA-registered label.

END OF SECTION 061000

NOT FOR BIDDING

(PAGE LEFT BLANK)

NOT FOR BIDDING

SECTION 061600 - SHEATHING

PART 1 - GENERAL

1.1 RELATED DOCUMENTS

A. Drawings and general provisions of the Contract, including General and Supplementary Conditions and Division 01 Specification Sections, apply to this section.

1.2 SUMMARY

A. Section Includes:

1. Wall sheathing.
2. Roof sheathing.
3. Parapet sheathing.
4. Sheathing joint and penetration treatment.

B. Related Requirements:

1. Section 061000 "Rough Carpentry" for plywood backing panels.
2. Section 072500 "Weather Barriers" for water-resistive barrier applied over wall sheathing.

1.3 ACTION SUBMITTALS

A. Product Data: For each type of process and factory-fabricated product. Indicate component materials and dimensions and include construction and application details.

1. Include data for wood preservative treatment from chemical treatment manufacturer and certification by treating plant that treated plywood complies with requirements. Indicate type of preservative used and net amount of preservative retained.
2. Include data for fire-retardant treatment from chemical treatment manufacturer and certification by treating plant that treated plywood complies with requirements. Include physical properties of treated materials.
3. For products receiving waterborne treatment, include statement that moisture content of treated materials was reduced to levels specified before shipment to Project site.

1.4 INFORMATIONAL SUBMITTALS

A. Evaluation Reports: For the following, from ICC-ES:

1. Wood-preservative-treated plywood.

NOT FOR BIDDING

1.5 QUALITY ASSURANCE

A. Testing Agency Qualifications: For testing agency providing classification marking for fire-retardant-treated material, an inspection agency acceptable to authorities having jurisdiction that periodically performs inspections to verify that the material bearing the classification marking is representative of the material tested.

1.6 DELIVERY, STORAGE, AND HANDLING

A. Stack panels flat with spacers beneath and between each bundle to provide air circulation. Protect sheathing from weather by covering with waterproof sheeting, securely anchored. Provide for air circulation around stacks and under coverings.

PART 2 - PRODUCTS

2.1 WOOD PANEL PRODUCTS

A. Thickness: As needed to comply with requirements specified, but not less than thickness indicated.

B. Factory mark panels to indicate compliance with applicable standard.

2.2 PRESERVATIVE-TREATED PLYWOOD

A. Preservative Treatment by Pressure Process: AWPA U1; Use Category UC2 for interior construction not in contact with ground, Use Category UC3b for exterior construction not in contact with ground, and Use Category UC4a for items in contact with ground.

1. Preservative Chemicals: Acceptable to authorities having jurisdiction and containing no arsenic or chromium.

B. Mark plywood with appropriate classification marking of an inspection agency acceptable to authorities having jurisdiction.

2.3 WALL SHEATHING

A. Plywood Sheathing: , Exterior, Structural I sheathing.

2.4 ROOF SHEATHING

A. Plywood Sheathing: , Exterior, Structural I sheathing.

2.5 PARAPET SHEATHING

A. Plywood Sheathing: , Exterior, Structural I sheathing.

NOT FOR BIDDING

2.6 FASTENERS

A. General: Provide fasteners of size and type indicated that comply with requirements specified in this article for material and manufacture.

1. For roof parapet and wall sheathing, provide fasteners with hot-dip zinc coating complying with ASTM A 153/A 153M.

B. Nails, Brads, and Staples: ASTM F 1667.

C. Power-Driven Fasteners: Fastener systems with an evaluation report acceptable to authorities having jurisdiction, based on ICC-ES AC70.

PART 3 - EXECUTION

3.1 INSTALLATION, GENERAL

A. Do not use materials with defects that impair quality of sheathing or pieces that are too small to use with minimum number of joints or optimum joint arrangement. Arrange joints so that pieces do not span between fewer than three support members.

B. Cut panels at penetrations, edges, and other obstructions of work; fit tightly against abutting construction unless otherwise indicated.

C. Securely attach to substrate by fastening as indicated, complying with the following:

1. Table 2304.9.1, "Fastening Schedule," in the ICC's International Building Code.
2. ICC-ES evaluation report for fastener.

D. Use common wire nails unless otherwise indicated. Select fasteners of size that will not fully penetrate members where opposite side will be exposed to view or will receive finish materials. Make tight connections. Install fasteners without splitting wood.

E. Coordinate wall parapet and roof sheathing installation with flashing and joint-sealant installation so these materials are installed in sequence and manner that prevent exterior moisture from passing through completed assembly.

F. Do not bridge building expansion joints; cut and space edges of panels to match spacing of structural support elements.

G. Coordinate sheathing installation with installation of materials installed over sheathing so sheathing is not exposed to precipitation or left exposed at end of the workday when rain is forecast.

3.2 WOOD STRUCTURAL PANEL INSTALLATION

A. General: Comply with applicable recommendations in APA Form No. E30, "Engineered Wood Construction Guide," for types of structural-use panels and applications indicated.

NOT FOR BIDDING

B. Fastening Methods: Fasten panels as indicated below:

1. Wall and Roof Sheathing:

a. Nail to wood framing.
b. Space panels 1/8 inch (3 mm) apart at edges and ends.

END OF SECTION 061600

NOT FOR BIDDING

SECTION 061753 - SHOP-FABRICATED WOOD TRUSSES

PART 1 - GENERAL

1.1 RELATED DOCUMENTS

A. Drawings and general provisions of the Contract, including General and Supplementary Conditions and Division 01 Specification Sections, apply to this section.

1.2 SUMMARY

A. Section Includes:

1. Wood roof trusses.
2. Wood girder trusses.

1.3 DEFINITIONS

A. Metal-Plate-Connected Wood Trusses: Planar structural units consisting of metal-plate-connected members fabricated from dimension lumber and cut and assembled before delivery to Project site.

1.4 ACTION SUBMITTALS

A. Shop Drawings: Show fabrication and installation details for trusses.

1. Show location, pitch, span, camber, configuration, and spacing for each type of truss required.
2. Indicate sizes, stress grades, and species of lumber.
3. Indicate locations of permanent bracing required to prevent buckling of individual truss members due to design loads.
4. Indicate locations, sizes, and materials for permanent bracing required to prevent buckling of individual truss members due to design loads.
5. Indicate type, size, material, finish, design values, orientation, and location of metal connector plates.
6. Show splice details and bearing details.

B. Delegated-Design Submittal: For metal-plate-connected wood trusses indicated to comply with performance requirements and design criteria, including analysis data signed and sealed by the qualified professional engineer responsible for their preparation.

1.5 INFORMATIONAL SUBMITTALS

A. Qualification Data: For metal connector-plate manufacturer.

NOT FOR BIDDING

B. Material Certificates: For dimension lumber specified to comply with minimum specific gravity. Indicate species and grade selected for each use and specific gravity.

C. Product Certificates: For metal-plate-connected wood trusses, signed by officer of truss-fabricating firm.

D. Evaluation Reports: For the following, from ICC-ES:

1. Wood-preservative-treated lumber.
2. Fire-retardant-treated wood.
3. Metal-plate connectors.
4. Metal truss accessories.

1.6 QUALITY ASSURANCE

A. Metal Connector-Plate Manufacturer Qualifications: A manufacturer that is a member of TPI and that complies with quality-control procedures in TPI 1 for manufacture of connector plates.

1. Manufacturer's responsibilities include providing professional engineering services needed to assume engineering responsibility.
2. Engineering Responsibility: Preparation of Shop Drawings and comprehensive engineering analysis by a qualified professional engineer.

B. Fabricator Qualifications: Shop that participates in a recognized quality-assurance program, complies with quality-control procedures in TPI 1, and involves third-party inspection by an independent testing and inspecting agency acceptable to Architect and authorities having jurisdiction.

C. Testing Agency Qualifications: Qualified testing agency providing classification marking for fire-retardant-treated material, and inspection agency acceptable to authorities having jurisdiction that periodically performs inspections to verify that the material bearing the classification marking is representative of the material tested.

1.7 DELIVERY, STORAGE, AND HANDLING

A. Handle and store trusses to comply with recommendations in SBCA BCSI, "Building Component Safety Information: Guide to Good Practice for Handling, Installing, Restraining, & Bracing Metal Plate Connected Wood Trusses."

1. Store trusses flat, off of ground, and adequately supported to prevent lateral bending.
2. Protect trusses from weather by covering with waterproof sheeting, securely anchored.
3. Provide for air circulation around stacks and under coverings.

B. Inspect trusses showing discoloration, corrosion, or other evidence of deterioration. Discard and replace trusses that are damaged or defective.

NOT FOR BIDDING

PART 2 - PRODUCTS

2.1 PERFORMANCE REQUIREMENTS

A. Delegated Design: Engage a qualified professional engineer, as defined in Section 014000 "Quality Requirements," to design metal-plate-connected wood trusses.

B. Structural Performance: Metal-plate-connected wood trusses shall be capable of withstanding design loads within limits and under conditions indicated. Comply with requirements in TPI 1 unless more stringent requirements are specified below.

1. Design Loads: As indicated.
2. Maximum Deflection under Design Loads:

a. Roof Trusses: Vertical deflection of 1/240 of span.
b. Floor Trusses: Vertical deflection of 1/360 of span.

C. Comply with applicable requirements and recommendations of TPI 1, TPI DSB, and SBCA BCSI.

D. Wood Structural Design Standard: Comply with applicable requirements in AF&PA's "National Design Specifications for Wood Construction" and its "Supplement."

2.2 DIMENSION LUMBER

A. Lumber: DOC PS 20 and applicable rules of any rules-writing agency certified by the American Lumber Standard Committee (ALSC) Board of Review. Provide lumber graded by an agency certified by the ALSC Board of Review to inspect and grade lumber under the rules indicated.

1. Factory mark each piece of lumber with grade stamp of grading agency.
2. For exposed lumber indicated to receive a stained or natural finish, omit grade stamp and provide certificates of grade compliance issued by grading agency.
3. Provide dressed lumber, S4S.
4. Provide dry lumber with 15 percent maximum moisture content at time of dressing.

2.3 METAL CONNECTOR PLATES

A. General: Fabricate connector plates to comply with TPI 1.

B. Hot-Dip Galvanized-Steel Sheet: ASTM A 653/A 653M; Structural Steel (SS), high-strength low-alloy steel Type A (HSLAS Type A), or high-strength low-alloy steel Type B (HSLAS Type B); G60 (Z180) coating designation; and not less than 0.036 inch (0.9 mm) thick.

1. Use for interior locations unless otherwise indicated.

NOT FOR BIDDING

2.4 FASTENERS

A. General: Provide fasteners of size and type indicated that comply with requirements specified in this article for material and manufacture.

1. Provide fasteners for use with metal framing anchors that comply with written recommendations of metal framing manufacturer.
2. Where trusses are exposed to weather, in ground contact, made from pressure-preservative treated wood, or in area of high relative humidity, provide fasteners with hot-dip zinc coating complying with ASTM A 153/A 153M of Type 304 stainless steel.

B. Nails, Brads, and Staples: ASTM F 1667.

2.5 METAL FRAMING ANCHORS AND ACCESSORIES

A. Allowable design loads, as published by manufacturer, shall comply with or exceed those indicated. Manufacturer's published values shall be determined from empirical data or by rational engineering analysis and demonstrated by comprehensive testing performed by a qualified independent testing agency. Framing anchors shall be punched for fasteners adequate to withstand same loads as framing anchors.

B. Galvanized-Steel Sheet: Hot-dip, zinc coated steel sheet complying with ASTM A 653/A 653M, G60 (Z180) coating designation.

1. Use for interior locations unless otherwise indicated.

2.6 MISCELLANEOUS MATERIALS

A. Galvanizing Repair Paint: SSPC-Paint 20, with dry film containing a minimum of 92 percent zinc dust by weight.

2.7 FABRICATION

A. Cut truss members to accurate lengths, angles, and sizes to produce close-fitting joints.

B. Fabricate metal connector plates to sizes, configurations, thicknesses, and anchorage details required to withstand design loads for types of joint designs indicated.

C. Assemble truss members in design configuration indicated; use jigs or other means to ensure uniformity and accuracy of assembly, with joints closely fitted to comply with tolerances in TPI 1. Position members to produce design camber indicated.

1. Fabricate wood trusses within manufacturing tolerances in TPI 1.

D. Connect truss members by metal connector plates located and securely embedded simultaneously in both sides of wood members by air or hydraulic press.

NOT FOR BIDDING

2.8 SOURCE QUALITY CONTROL

A. Special Inspections: Owner will engage a qualified special inspector to perform special inspections.

1. Provide special inspector with access to fabricator's documentation of detailed fabrication and quality-control procedures that provide a basis for inspection control of the workmanship and the fabricator's ability to conform to approved construction documents and referenced standards.
2. Provide special inspector with access to places where wood trusses are being fabricated to perform inspections.

B. Correct deficiencies in Work that special inspections indicate do not comply with the Contract Documents.

PART 3 - EXECUTION

3.1 INSTALLATION

A. Install wood trusses only after supporting construction is in place and is braced and secured.

B. If trusses are delivered to Project site in more than one piece, assemble trusses before installing.

C. Hoist trusses in place by lifting equipment suited to sizes and types of trusses required, exercising care not to damage truss members or joints by out-of-plane bending or other causes.

D. Install and brace trusses according to TPI recommendations and as indicated.

E. Install trusses plumb, square, and true to line and securely fasten to supporting construction.

F. Space trusses as indicated; adjust and align trusses in location before permanently fastening.

G. Anchor trusses securely at bearing points; use metal truss tie-downs or floor truss hangers as applicable. Install fasteners through each fastener hole in metal framing anchors according to manufacturer's fastening schedules and written instructions.

H. Securely connect each truss ply required for forming built-up girder trusses.

1. Anchor trusses to girder trusses as indicated.

I. Install and fasten permanent bracing during truss erection and before construction loads are applied. Anchor ends of permanent bracing where terminating at walls or beams.

1. Install and fasten strongback bracing vertically against vertical web of parallel-chord floor trusses at centers indicated.

J. Install wood trusses within installation tolerances in TPI 1.

K. Do not alter trusses in field. Do not cut, drill, notch, or remove truss members.

NOT FOR BIDDING

L. Replace wood trusses that are damaged or do not comply with requirements.

1. Damaged trusses may be repaired according to truss repair details signed and sealed by the qualified professional engineer responsible for truss design, when approved by Architect.

3.2 REPAIRS AND PROTECTION

A. Protect wood that has been treated with inorganic boron (SBX) from weather. If, despite protection, inorganic boron-treated wood becomes wet, apply EPA-registered borate treatment. Apply borate solution by spraying to comply with EPA-registered label.

B. Protect wood trusses from weather. If, despite protection, wood trusses become wet, apply EPA-registered borate treatment. Apply borate solution by spraying to comply with EPA-registered label.

C. Repair damaged galvanized coatings on exposed surfaces according to ASTM A 780/A 780M and manufacturer's written instructions.

3.3 FIELD QUALITY CONTROL

A. Special Inspections: Engage a qualified special inspector to perform special inspections to verify that temporary installation restraint/bracing and the permanent individual truss member restraint/bracing are installed in accordance with the approved truss submittal package.

END OF SECTION 061753

NOT FOR BIDDING

SECTION 062013 - EXTERIOR FINISH CARPENTRY

PART 1 - GENERAL

1.1 RELATED DOCUMENTS

A. Drawings and general provisions of the Contract, including General and Supplementary Conditions and Division 01 Specification Sections, apply to this section.

1.2 SUMMARY

A. Section Includes:

1. Exterior trim.
2. Fiber cement siding.
3. Fiber cement board soffits.
4. Decorative brackets

B. Related Requirements:

1. Division 06 Section "Rough Carpentry" for furring, blocking, and other carpentry work not exposed to view and for framing exposed to view.
2. Division 09 Section "Exterior Painting" for finishing exterior carpentry.

1.3 ACTION SUBMITTALS

A. Product Data: For each type of process and factory-fabricated product. Indicate component materials, dimensions, profiles, textures, and colors and include construction and application details.

B. Samples for Initial Selection: For each type of product involving selection of colors, profiles, or textures.

1.4 INFORMATIONAL SUBMITTALS

A. Sample Warranties: For manufacturer's warranties.

1.5 QUALITY ASSURANCE

A. Testing Agency Qualifications: For testing agency providing classification marking for fire-retardant-treated material, an inspection agency acceptable to authorities having jurisdiction that periodically performs inspections to verify that the material bearing the classification marking is representative of the material tested.

NOT FOR BIDDING

1.6 DELIVERY, STORAGE, AND HANDLING

A. Stack lumber, plywood, and other panels flat with spacers between each bundle to provide air circulation. Protect materials from weather by covering with waterproof sheeting, securely anchored. Provide for air circulation around stacks and under coverings.

1.7 FIELD CONDITIONS

A. Weather Limitations: Proceed with installation only when existing and forecast weather conditions permit work to be performed and at least one coat of specified finish can be applied without exposure to rain, snow, or dampness.

B. Do not install finish carpentry materials that are wet, moisture damaged, or mold damaged.

1. Indications that materials are wet or moisture damaged include, but are not limited to, discoloration, sagging, or irregular shape.
2. Indications that materials are mold damaged include, but are not limited to, fuzzy or splotchy surface contamination and discoloration.

PART 2 - PRODUCTS

2.1 FIBER-CEMENT TRIM

A. General: ASTM C 1186, Type A, Grade II, fiber-cement board, noncombustible when tested according to ASTM E 136; with a flame-spread index of 25 or less when tested according to ASTM E 84.

1. Basis-of-Design Product: Subject to compliance with requirements, provide James Hardie, HardiTrim lap siding, Select Cedarmill pattern, pre-finished, see Section 074600 for detailed specifications.

2.2 FIBER-CEMENT SIDING

A. General: ASTM C 1186, Type A, Grade II, fiber-cement board, noncombustible when tested according to ASTM E 136; with a flame-spread index of 25 or less when tested according to ASTM E 84.

1. Basis-of-Design Product: Subject to compliance with requirements, provide James Hardie, HardiPlank lap siding, Select Cedarmill pattern, pre-finished, see Section 074600 for detailed specifications.

2.3 FIBER-CEMENT SOFFIT

A. General: ASTM C 1186, Type A, Grade II, fiber-cement board, noncombustible when tested according to ASTM E 136; with a flame-spread index of 25 or less when tested according to ASTM E 84.

NOT FOR BIDDING

1. Basis-of-Design Product: Subject to compliance with requirements, provide James Hardie, HardiPanel vented and non-vented soffit, Select Cedarmill pattern, pre-finished, see Section 074600 for detailed specifications.

2.4 MISCELLANEOUS MATERIALS

A. Fasteners for Exterior Finish Carpentry: Provide nails or screws in sufficient length to penetrate not less than 1-1/2 inches (38 mm) into wood substrate.

1. For face-fastening siding, provide ringed-shank siding nails or hot-dip galvanized-steel siding nails.
2. For applications not otherwise indicated, provide hot-dip galvanized-steel fasteners. For fastening to wood, use ribbed bugle-head screws of sufficient length to penetrate a minimum of 1 inch (25 mm) into substrate.
3. For fastening to metal, use ribbed bugle-head screws of sufficient length to penetrate a minimum of 1/4 inch (6 mm), or three screw-threads, into substrate.
4. For fastening fiber cement, use hot-dip galvanized fasteners.

B. Flashing: Comply with requirements in Division 07 Section "Sheet Metal Flashing and Trim" for flashing materials installed in exterior finish carpentry.

1. Horizontal Joint Flashing for Panel Siding: Preformed, aluminum, Z-shaped flashing.

C. Sealants: Latex, complying with ASTM C834, Type OP, Grade NF and with applicable requirements in Division 07 Section "Joint Sealants," recommended by sealant manufacturer and manufacturer of substrates for intended application.

1. Products: Subject to compliance with requirements, available products that may be incorporated into the Work include, but are not limited to, the following:

a. BASF Building Systems; Monolac.
b. Bostik, Inc.; Chem Calk 500.
c. Pecora Corporation; AC-20+.
d. Schnee-Morehead, Inc., an ITW company; SM 8200.
e. Tremco Incorporated; Tremflex 834.

2.5 FABRICATION

A. Back out or kerf backs of standing and running trim wider than 5 inches (125 mm), except members with ends exposed in finished work.

B. Ease edges of lumber less than 1 inch (25 mm) in nominal thickness to 1/16-inch (1.5-mm) radius and edges of lumber 1 inch (25 mm) or more in nominal thickness to 1/8-inch (3-mm) radius.

NOT FOR BIDDING

PART 3 - EXECUTION

3.1 EXAMINATION

A. Examine substrates, with Installer present, for compliance with requirements for installation tolerances and other conditions affecting performance.

B. Examine finish carpentry materials before installation. Reject materials that are wet, moisture damaged, and mold damaged.

C. Proceed with installation only after unsatisfactory conditions have been corrected.

3.2 PREPARATION

A. Clean substrates of projections and substances detrimental to application.

B. Prime lumber and moldings to be painted, including both faces and edges, unless factory primed. Cut to required lengths and prime ends. Comply with requirements in Division 09 Section "Exterior Painting."

3.3 INSTALLATION, GENERAL

A. Do not use materials that are unsound, warped, improperly treated or finished, inadequately seasoned, or too small to fabricate with proper jointing arrangements.

1. Do not use manufactured units with defective surfaces, sizes, or patterns.

B. Install exterior finish carpentry level, plumb, true, and aligned with adjacent materials. Use concealed shims where necessary for alignment.

1. Scribe and cut exterior finish carpentry to fit adjoining work. Refinish and seal cuts as recommended by manufacturer.
2. Install to tolerance of 1/8 inch in 96 inches (3 mm in 2438 mm) for level and plumb. Install adjoining exterior finish carpentry with 1/32-inch (0.8-mm) maximum offset for flush installation and 1/16-inch (1.5-mm) maximum offset for reveal installation.
3. Install stairs with no more than 3/16-inch (4.7-mm) variation between adjacent treads and risers and with no more than 3/8-inch (9.5-mm) variation between largest and smallest treads and risers within each flight.
4. Coordinate exterior finish carpentry with materials and systems in or adjacent to it. Provide cutouts for mechanical and electrical items that penetrate exterior finish carpentry.

3.4 STANDING AND RUNNING TRIM INSTALLATION

A. Install trim with minimum number of joints practical, using full-length pieces from maximum lengths of lumber available. Do not use pieces less than 24 inches (610 mm) long except where necessary.

NOT FOR BIDDING

1. Use scarf joints for end-to-end joints.
2. Stagger end joints in adjacent and related members.

B. Fit exterior joints to exclude water. Cope at returns and miter at corners to produce tight-fitting joints with full-surface contact throughout length of joint. Plane backs of casings to provide uniform thickness across joints, where necessary for alignment.

C. Where face fastening is unavoidable, countersink fasteners, fill surface flush, and sand unless otherwise indicated.

3.5 SIDING INSTALLATION

A. Install siding to comply with manufacturer's written instructions and warranty requirements.

B. Horizontal Siding: Apply starter strip along bottom edge of sheathing or sill. Install first course of siding with lower edge at least 1/8 inch (3 mm) below starter strip and subsequent courses lapped 1 inch (25 mm) over course below. Nail at each stud. Do not allow nails to penetrate more than one thickness of siding.

1. Leave 1/8-inch (3-mm) gap at trim and corners unless otherwise recommended by manufacturer, and apply sealant.
2. Butt joints only over framing or blocking, nailing top and bottom on each side and staggering joints in subsequent courses.
3. Install prefabricated outside corners as recommended by manufacturer of siding materials.

C. Flashing: Install metal flashing as indicated on Drawings and as recommended by siding manufacturer.

D. Finish: Apply finish within two weeks of installation.

3.6 ADJUSTING

A. Replace exterior finish carpentry that is damaged or does not comply with requirements. Exterior finish carpentry may be repaired or refinished if work complies with requirements and shows no evidence of repair or refinishing. Adjust joinery for uniform appearance.

3.7 CLEANING

A. Clean exterior finish carpentry on exposed and semiexposed surfaces. Touch up factory-applied finishes to restore damaged or soiled areas.

3.8 PROTECTION

A. Protect installed products from damage from weather and other causes during construction.

B. Remove and replace finish carpentry materials that are wet, moisture damaged, and mold damaged.

NOT FOR BIDDING

1. Indications that materials are wet or moisture damaged include, but are not limited to, discoloration, sagging, or irregular shape.
2. Indications that materials are mold damaged include, but are not limited to, fuzzy or splotchy surface contamination and discoloration.

END OF SECTION 062013

NOT FOR BIDDING

SECTION 062023 - INTERIOR FINISH CARPENTRY

PART 1 - GENERAL

1.1 RELATED DOCUMENTS

A. Drawings and general provisions of the Contract, including General and Supplementary Conditions and Division 01 Specification Sections, apply to this Section.

1.2 SUMMARY

A. Section Includes:

1. Interior trim.

B. Related Requirements:

1. Division 06 Section "Rough Carpentry" for framing, blocking, and other carpentry work not exposed to view and for framing exposed to view.
2. Division 06 Section "Interior Architectural Woodwork" for shop-fabricated interior woodwork.
3. Division 09 Section "Interior Painting" for priming and backpriming of interior finish carpentry.

1.3 DEFINITIONS

A. MDF: Medium-density fiberboard.

B. MDO: Plywood with a medium-density overlay on the face.

1.4 ACTION SUBMITTALS

A. Product Data: For each type of process and factory-fabricated product. Indicate component materials, dimensions, profiles, textures, and colors and include construction and application details.

1. Include data for wood-preservative treatment from chemical-treatment manufacturer and certification by treating plant that treated materials comply with requirements. Indicate type of preservative used and net amount of preservative retained. Include chemical-treatment manufacturer's written instructions for finishing treated material.
2. Include data for fire-retardant treatment from chemical-treatment manufacturer and certification by treating plant that treated materials comply with requirements.
3. For products receiving a waterborne treatment, include statement that moisture content of treated materials was reduced before shipment to Project site to levels specified.
4. Include copies of warranties from chemical-treatment manufacturers for each type of treatment.

NOT FOR BIDDING

B. Samples for Initial Selection: For each type of product involving selection of colors, profiles, or textures.

C. Samples for Verification:

1. For each species and cut of lumber and panel products with non-factory-applied finish, with 1/2 of exposed surface finished, 50 sq. in. (300 sq. cm) for lumber and 8 by 10 inches (200 by 250 mm) for panels.
2. For foam plastic moldings, with 1/2 of exposed surface finished: 50 sq. in. (300 sq. cm).
3. For each finish system and color of lumber and panel products with factory-applied finish, 50 sq. in. (300 sq. cm) for lumber and 8 by 10 inches (200 by 250 mm) for panels.

1.5 INFORMATIONAL SUBMITTALS

A. Evaluation Reports: For fire-retardant-treated wood, from ICC-ES.

B. Sample Warranty: For manufacturer's warranty.

1.6 DELIVERY, STORAGE, AND HANDLING

A. Stack lumber, plywood, and other panels flat with spacers between each bundle to provide air circulation. Protect materials from weather by covering with waterproof sheeting, securely anchored. Provide for air circulation around stacks and under coverings.

B. Deliver interior finish carpentry materials only when environmental conditions meet requirements specified for installation areas. If interior finish carpentry materials must be stored in other than installation areas, store only where environmental conditions meet requirements specified for installation areas.

1.7 FIELD CONDITIONS

A. Environmental Limitations: Do not deliver or install interior finish carpentry materials until building is enclosed and weatherproof, wet work in space is completed and nominally dry, and HVAC system is operating and maintaining temperature and relative humidity at occupancy levels during the remainder of the construction period.

B. Do not install finish carpentry materials that are wet, moisture damaged, or mold damaged.

1. Indications that materials are wet or moisture damaged include, but are not limited to, discoloration, sagging, or irregular shape.
2. Indications that materials are mold damaged include, but are not limited to, fuzzy or splotchy surface contamination and discoloration.

NOT FOR BIDDING

PART 2 - PRODUCTS

2.1 MATERIALS, GENERAL

A. Low-Emitting Materials: Composite wood products shall comply with the testing and product requirements of the California Department of Health Services' "Standard Practice for the Testing of Volatile Organic Emissions from Various Sources Using Small-Scale Environmental Chambers."

B. Lumber: DOC PS 20 and the following grading rules:

1. NeLMA: Northeastern Lumber Manufacturers' Association, "Standard Grading Rules for Northeastern Lumber."
2. NHLA: National Hardwood Lumber Association, "Rules for the Measurement and Inspection of Hardwood & Cypress."
3. NLGA: National Lumber Grades Authority, "Standard Grading Rules for Canadian Lumber."
4. SPIB: The Southern Pine Inspection Bureau, "Standard Grading Rules for Southern Pine Lumber."
5. WCLIB: West Coast Lumber Inspection Bureau, Standard No. 17, "Grading Rules for West Coast Lumber."
6. WWPA: Western Wood Products Association, "Western Lumber Grading Rules."

C. Factory mark each piece of lumber with grade stamp of inspection agency indicating grade, species, moisture content at time of surfacing, and mill.

1. For exposed lumber, mark grade stamp on end or back of each piece, or omit grade stamp and provide certificates of grade compliance issued by inspection agency.

D. Softwood Plywood: DOC PS 1.

E. Hardboard: AHA A135.4.

F. MDF: ANSI A208.2, Grade 130, made with binder containing no urea-formaldehyde resin.

G. Particleboard: ANSI A208.1, Grade M-2, made with binder containing no urea-formaldehyde resin.

H. Melamine-Faced Particleboard: Particleboard complying with ANSI A208.1, Grade M-2, finished on both faces with thermally fused, melamine-impregnated decorative paper and complying with requirements of NEMA LD3, Grade VGL, for test methods 3.3, 3.4, 3.6, 3.8, and 3.10.

1. Color: As selected by Architect from manufacturer's full range.

2.2 WOOD-PRESERVATIVE-TREATED MATERIALS

A. Preservative Treatment by Pressure Process: AWPA U1; Use Category UC2.

NOT FOR BIDDING

1. Kiln dry lumber and plywood after treatment to a maximum moisture content of 19 and 18 percent respectively.
2. Preservative Chemicals: Acceptable to authorities having jurisdiction and containing no arsenic or chromium.
3. For exposed items indicated to receive transparent finish, do not use chemical formulations that contain colorants or that bleed through or otherwise adversely affect finishes.
4. Do not use material that is warped or does not comply with requirements for untreated material.
5. Mark lumber with treatment-quality mark of an inspection agency approved by the American Lumber Standard Committee's Board of Review.

    a. For exposed lumber indicated to receive a stained or natural finish, mark end or back of each piece or omit marking and provide certificates of treatment compliance issued by inspection agency.

6. Mark plywood with appropriate classification marking of an inspection agency acceptable to authorities having jurisdiction.

    a. For exposed plywood indicated to receive a stained or natural finish, mark back of each piece.

7. Application: Where indicated.

2.3 FIRE-RETARDANT-TREATED MATERIALS

A. General: For applications indicated, use materials complying with requirements in this article that are acceptable to authorities having jurisdiction, and comply with testing requirements; testing by a qualified testing agency.

B. Fire-Retardant-Treated Lumber and Plywood by Pressure Process: Products with a flame-spread index of 25 or less when tested according to ASTM E 84, with no evidence of significant progressive combustion when the test is extended an additional 20 minutes, and with the flame front not extending more than 10.5 feet (3.2 m) beyond the centerline of the burners at any time during the test.

    1. Kiln dry lumber and plywood after treatment to a maximum moisture content of 19 and 15 percent respectively.

C. For exposed items indicated to receive a stained or natural finish, use chemical formulations that do not contain colorants, and provide materials that do not have marks from spacer sticks on exposed face.

D. Do not use material that does not comply with requirements for untreated material or is warped or discolored.

E. Identify fire-retardant-treated wood with appropriate classification marking of testing and inspecting agency acceptable to authorities having jurisdiction.

NOT FOR BIDDING

1. For exposed lumber indicated to receive a stained or natural finish, mark end or back of each piece or omit marking and provide certificates of treatment compliance issued by inspection agency.
2. For exposed plywood indicated to receive a stained or natural finish, mark back of each piece.

F. Application: Where indicated.

2.4 INTERIOR TRIM

A. Softwood Lumber Trim for Transparent Finish (Stain or Clear Finish):

1. Species and Grade: Douglas fir south, Superior or C&Btr finish; NLGA, WCLIB, or WWPA.
2. Maximum Moisture Content: 15 percent with at least 85 percent of shipment at 12 percent or less.
3. Finger Jointing: Not allowed.
4. Face Surface: Surfaced (smooth).

B. Lumber Trim for Opaque Finish (Painted Finish):

1. Species and Grade: Spruce-pine-fir #1 Common; NeLMA, NLGA, WCLIB, or WWPA.
2. Maximum Moisture Content: 15 percent with at least 85 percent of shipment at 12 percent or less.
3. Finger Jointing: Allowed.
4. Face Surface: Surfaced (smooth).
5. Optional Material: Primed MDF of same actual dimensions as lumber indicated may be used in lieu of lumber.

2.5 MISCELLANEOUS MATERIALS

A. Fasteners for Interior Finish Carpentry: Nails, screws, and other anchoring devices of type, size, material, and finish required for application indicated to provide secure attachment, concealed where possible.

B. Low-Emitting Materials: Adhesives shall comply with the testing and product requirements of the California Department of Health Services' "Standard Practice for the Testing of Volatile Organic Emissions from Various Sources Using Small-Scale Environmental Chambers."

C. Glue: Aliphatic-resin, polyurethane, or resorcinol wood glue recommended by manufacturer for general carpentry use.

1. Wood glue shall have a VOC content of 30 g/L or less when calculated according to 40 CFR 59, Subpart D (EPA Method 24).

D. Paneling Adhesive: Comply with paneling manufacturer's written recommendations for adhesives.

NOT FOR BIDDING

1. Adhesive shall have a VOC content of 50 g/L or less when calculated according to 40 CFR 59, Subpart D (EPA Method 24).

E. Multipurpose Construction Adhesive: Formulation complying with ASTM D 3498 that is recommended for indicated use by adhesive manufacturer.

1. Adhesive shall have a VOC content of 70 g/L or less when calculated according to 40 CFR 59, Subpart D (EPA Method 24).

2.6 FABRICATION

A. Back out or kerf backs of the following members except those with ends exposed in finished work:

1. Interior standing and running trim except shoe and crown molds.
2. Wood-board paneling.

B. Ease edges of lumber less than 1 inch (25 mm) in nominal thickness to 1/16-inch (1.5-mm) radius and edges of lumber 1 inch (25 mm) or more in nominal thickness to 1/8-inch (3-mm) radius.

PART 3 - EXECUTION

3.1 EXAMINATION

A. Examine substrates, with Installer present, for compliance with requirements for installation tolerances and other conditions affecting performance.

B. Examine finish carpentry materials before installation. Reject materials that are wet, moisture damaged, and mold damaged.

C. Proceed with installation only after unsatisfactory conditions have been corrected.

3.2 PREPARATION

A. Clean substrates of projections and substances detrimental to application.

B. Before installing interior finish carpentry, condition materials to average prevailing humidity in installation areas for a minimum of 24 hours unless longer conditioning is recommended by manufacturer.

3.3 INSTALLATION, GENERAL

A. Do not use materials that are unsound, warped, improperly treated or finished, inadequately seasoned, too small to fabricate with proper jointing arrangements, or with defective surfaces, sizes, or patterns.

NOT FOR BIDDING

B. Install interior finish carpentry level, plumb, true, and aligned with adjacent materials. Use concealed shims where necessary for alignment.

1. Scribe and cut interior finish carpentry to fit adjoining work. Refinish and seal cuts as recommended by manufacturer.
2. Where face fastening is unavoidable, countersink fasteners, fill surface flush, and sand unless otherwise indicated.
3. Install to tolerance of 1/8 inch in 96 inches (3 mm in 2438 mm) for level and plumb. Install adjoining interior finish carpentry with 1/32-inch (0.8-mm) maximum offset for flush installation and 1/16-inch (1.5-mm) maximum offset for reveal installation.
4. Install stairs with no more than 3/16-inch (4.7-mm) variation between adjacent treads and risers and with no more than 3/8-inch (9.5-mm) variation between largest and smallest treads and risers within each flight.
5. Coordinate interior finish carpentry with materials and systems in or adjacent to it. Provide cutouts for mechanical and electrical items that penetrate interior finish carpentry.

3.4 STANDING AND RUNNING TRIM INSTALLATION

A. Install with minimum number of joints practical, using full-length pieces from maximum lengths of lumber available. Do not use pieces less than 24 inches (610 mm) long, except where necessary. Stagger joints in adjacent and related standing and running trim. Cope at returns, miter at outside corners, and cope at inside corners to produce tight-fitting joints with full-surface contact throughout length of joint. Use scarf joints for end-to-end joints. Plane backs of casings to provide uniform thickness across joints where necessary for alignment.

1. Match color and grain pattern of trim for transparent finish (stain or clear finish) across joints.
2. Install trim after gypsum board joint finishing operations are completed.
3. Install without splitting; drill pilot holes before fastening where necessary to prevent splitting. Fasten to prevent movement or warping. Countersink fastener heads on exposed carpentry work and fill holes.

3.5 ADJUSTING

A. Replace interior finish carpentry that is damaged or does not comply with requirements. Interior finish carpentry may be repaired or refinished if work complies with requirements and shows no evidence of repair or refinishing. Adjust joinery for uniform appearance.

3.6 CLEANING

A. Clean interior finish carpentry on exposed and semiexposed surfaces. Restore damaged or soiled areas and touch up factory-applied finishes, if any.

3.7 PROTECTION

A. Protect installed products from damage from weather and other causes during construction.

NOT FOR BIDDING

B. Remove and replace finish carpentry materials that are wet, moisture damaged, and mold damaged.

1. Indications that materials are wet or moisture damaged include, but are not limited to, discoloration, sagging, or irregular shape.
2. Indications that materials are mold damaged include, but are not limited to, fuzzy or splotchy surface contamination and discoloration.

END OF SECTION 062023

NOT FOR BIDDING

SECTION 071113 - BITUMINOUS DAMPPROOFING

PART 1 - GENERAL

1.1 RELATED DOCUMENTS

A. Drawings and general provisions of the Contract, including General and Supplementary Conditions and Division 01 Specification Sections, apply to this section.

1.2 SUMMARY

A. Section Includes:

1. Cold-applied, cut-back-asphalt dampproofing.

B. Related Requirements:

1. Division 03 Section "Cast-in-Place Concrete" for bituminous vapor retarders.

1.3 ACTION SUBMITTALS

A. Product Data: For each type of product.

1.4 FIELD CONDITIONS

A. Weather Limitations: Proceed with application only when existing and forecasted weather conditions permit dampproofing to be performed according to manufacturers' written instructions.

B. Ventilation: Provide adequate ventilation during application of dampproofing in enclosed spaces. Maintain ventilation until dampproofing has cured.

PART 2 - PRODUCTS

2.1 MATERIALS, GENERAL

A. Source Limitations: Obtain primary dampproofing materials and primers from single source from single manufacturer. Provide auxiliary materials recommended in writing by manufacturer of primary materials.

B. VOC Content: Products shall comply with VOC content limits of authorities having jurisdiction unless otherwise required.

NOT FOR BIDDING

2.2 COLD-APPLIED, CUT-BACK-ASPHALT DAMPPROOFING

A. Manufacturers: Subject to compliance with requirements, available manufacturers offering products that may be incorporated into the Work include, but are not limited to, the following:

1. APOC, Inc.; a division of Gardner-Gibson.
2. BASF Construction Chemicals - Building Systems; Sonneborn Brand Products.
3. Brewer Company (The).
4. ChemMasters, Inc.
5. Euclid Chemical Company (The); an RPM company.
6. Henry Company.
7. Karnak Corporation.
8. Koppers Inc.
9. Malarkey Roofing Products.
10. Meadows, W. R., Inc.

B. Trowel Coats: ASTM D 4586, Type I, Class 1, fibered.

C. Brush and Spray Coats: ASTM D 4479, Type I, fibered or nonfibered.

D. VOC Content: 300 g/L or less when calculated according to 40 CFR 59, Subpart D (EPA Method 24).

E. Low-Emitting Materials: Dampproofing shall comply with the testing and product requirements of the California Department of Health Services' "Standard Practice for the Testing of Volatile Organic Emissions from Various Sources Using Small-Scale Environmental Chambers."

2.3 AUXILIARY MATERIALS

A. General: Furnish auxiliary materials recommended in writing by dampproofing manufacturer for intended use and compatible with bituminous dampproofing.

B. Cut-Back-Asphalt Primer: ASTM D 41.

C. Patching Compound: Asbestos-free fibered mastic of type recommended in writing by dampproofing manufacturer.

PART 3 - EXECUTION

3.1 EXAMINATION

A. Examine substrates, areas, and conditions with Applicator present, for compliance with requirements for surface smoothness, surface moisture, and other conditions affecting performance of bituminous dampproofing work.

1. Test for surface moisture according to ASTM D 4263.

NOT FOR BIDDING

B. Proceed with application only after substrate construction and penetrating work have been completed and unsatisfactory conditions have been corrected.

3.2 PREPARATION

A. Mask or otherwise protect adjoining exposed surfaces from being stained, spotted, or coated with dampproofing. Prevent dampproofing materials from entering and clogging weep holes and drains.

B. Clean substrates of projections and substances detrimental to the dampproofing work; fill voids, seal joints, and remove bond breakers if any, as recommended in writing by prime material manufacturer.

C. Apply patching compound to patch and fill tie holes, honeycombs, reveals, and other imperfections.

3.3 APPLICATION, GENERAL

A. Comply with manufacturer's written instructions for dampproofing application, cure time between coats, and drying time before backfilling unless more stringent requirements are indicated.

1. Apply dampproofing to provide continuous plane of protection.
2. Apply additional coats if recommended in writing by manufacturer or to achieve a smooth surface and uninterrupted coverage.

B. Where dampproofing footings and foundation walls, apply from finished-grade line to top of footing; extend over top of footing and down a minimum of 6 inches (150 mm) over outside face of footing.

1. Extend dampproofing 12 inches (300 mm) onto intersecting walls and footings, but do not extend onto surfaces exposed to view when Project is completed.
2. Install flashings and corner protection stripping at internal and external corners, changes in plane, construction joints, cracks, and where shown as "reinforced," by embedding an 8-inch- (200 mm-) wide strip of asphalt-coated glass fabric in a heavy coat of dampproofing. Dampproofing coat for embedding fabric is in addition to other coats required.

3.4 COLD-APPLIED, CUT-BACK-ASPHALT DAMPPROOFING

A. Concrete Foundations: Apply two brush or spray coats at not less than 1.25 gal./100 sq. ft. (0.5 L/sq. m) for first coat and 1 gal./100 sq. ft. (0.4 L/sq. m) for second coat or one trowel coat at not less than 4 gal./100 sq. ft. (1.6 L/sq. m)].

3.5 CLEANING

A. Clean spillage and soiling from adjacent construction using cleaning agents and procedures recommended in writing by manufacturer of affected construction.

NOT FOR BIDDING

END OF SECTION 071113

NOT FOR BIDDING

SECTION 072100 - THERMAL INSULATION

PART 1 - GENERAL

1.1 RELATED DOCUMENTS

A. Drawings and general provisions of the Contract, including General and Supplementary Conditions and Division 01 Specification Sections, apply to this section.

1.2 SUMMARY

A. Section Includes:

1. Foam-plastic board insulation.
2. Glass-fiber blanket insulation.

B. Related Sections:

1. Division 06 Section "Sheathing" for foam-plastic board sheathing over wood or steel framing.
2. Division 07 Section(s) "Ethylene-Propylene-Diene-Monomer (EPDM) Roofing" for insulation specified as part of roofing construction.
3. Division 07 Section "Fire-Resistive Joint Systems" for insulation installed as part of a perimeter fire-resistive joint system.

1.3 ACTION SUBMITTALS

A. Product Data: For each type of product indicated.

1.4 INFORMATIONAL SUBMITTALS

A. Product Test Reports: Based on evaluation of comprehensive tests performed by a qualified testing agency, for each product.

B. Research/Evaluation Reports: For foam-plastic insulation, from ICC-ES.

1.5 QUALITY ASSURANCE

A. Surface-Burning Characteristics: As determined by testing identical products according to ASTM E 84 by a qualified testing agency. Identify products with appropriate markings of applicable testing agency.

NOT FOR BIDDING

1.6 DELIVERY, STORAGE, AND HANDLING

A. Protect insulation materials from physical damage and from deterioration due to moisture, soiling, and other sources. Store inside and in a dry location. Comply with manufacturer's written instructions for handling, storing, and protecting during installation.

B. Protect foam-plastic board insulation as follows:

1. Do not expose to sunlight except to necessary extent for period of installation and concealment.
2. Protect against ignition at all times. Do not deliver foam-plastic board materials to Project site before installation time.
3. Quickly complete installation and concealment of foam-plastic board insulation in each area of construction.

PART 2 - PRODUCTS

2.1 FOAM-PLASTIC BOARD INSULATION

A. Extruded-Polystyrene Board Insulation: ASTM C 578, of type and minimum compressive strength indicated below, with maximum flame spread and smoke-developed indexes of 75 and 450, respectively, per ASTM E 84.

1. Manufacturers: Subject to compliance with requirements, available manufacturers offering products that may be incorporated into the Work include, but are not limited to, the following:

a. DiversiFoam Products.
b. Dow Chemical Company (The).
c. Owens Corning.
d. Pactiv Building Products.

B. Polyisocyanurate Board Insulation: ASTM C 1289, Type II, Class 1, Grade 2, felt or glass-fiber mat facer on both major surfaces.

1. Manufacturers: Subject to compliance with requirements, available manufacturers offering products that may be incorporated into the Work include, but are not limited to, the following:

a. Atlas Roofing Corporation.
b. Dow Chemical Company (The).
c. Kingspan Inc.

2. Tapered Insulation: Provide factory-tapered insulation boards fabricated to slope of 1/4 inch per 12 inches (1:48) unless otherwise indicated.
3. Provide preformed saddles, crickets, tapered edge strips, and other insulation shapes where indicated for sloping to drain. Fabricate to slopes indicated.

NOT FOR BIDDING

C. Adhesive for Bonding Insulation: Product with demonstrated capability to bond insulation securely to substrates without damaging insulation and substrates.

2.2 GLASS-FIBER BLANKET INSULATION

A. Manufacturers: Subject to compliance with requirements, available manufacturers offering products that may be incorporated into the Work include, but are not limited to, the following:

1. CertainTeed Corporation.
2. Guardian Building Products, Inc.
3. Johns Manville.
4. Knauf Insulation.
5. Owens Corning.

B. Unfaced, Glass-Fiber Blanket Insulation: ASTM C 665, Type I, with maximum flame-spread and smoke-developed indexes of 25 and 50, respectively, per ASTM E 84; passing ASTM E 136 for combustion characteristics.

C. Kraft-Faced, Glass-Fiber Blanket Insulation: ASTM C 665, Type II (non-reflective faced), Class C (faced surface not rated for flame propagation); Category 1 (membrane is a vapor barrier).

D. Eave Ventilation Troughs: Preformed, rigid fiberboard or plastic sheets designed and sized to fit between roof framing members and to provide cross ventilation between insulated attic spaces and vented eaves.

2.3 INSULATION FASTENERS

A. Adhesively Attached, Spindle-Type Anchors: Plate welded to projecting spindle; capable of holding insulation of specified thickness securely in position indicated with self-locking washer in place.

1. Products: Subject to compliance with requirements, available products that may be incorporated into the Work include, but are not limited to, the following:

   a. AGM Industries, Inc.; Series T TACTOO Insul-Hangers.
   b. Gemco; Spindle Type.

2. Plate: Perforated, galvanized carbon-steel sheet, 0.030 inch (0.762 mm) thick by 2 inches (50 mm) square.
3. Spindle: Copper-coated, low-carbon steel; fully annealed; 0.105 inch (2.67 mm) in diameter, length to suit depth of insulation indicated.

B. Insulation Retaining Washers: Self-locking washers formed from 0.016-inch- (0.41-mm-) thick galvanized-steel sheet, with beveled edge for increased stiffness, sized as required to hold insulation securely in place, but not less than 1-1/2 inches (38 mm) square or in diameter.

1. Products: Subject to compliance with requirements, available products that may be incorporated into the Work include, but are not limited to, the following]:

NOT FOR BIDDING

a. AGM Industries, Inc.; RC150.
b. Gemco; R-150.

2. Protect ends with capped self-locking washers incorporating a spring steel insert to ensure permanent retention of cap in the following locations:

a. Attic spaces.
b. Where indicated.

C. Insulation Standoff: Spacer fabricated from galvanized mild-steel sheet for fitting over spindle of insulation anchor to maintain air space of 1 inch (25 mm) between face of insulation and substrate to which anchor is attached.

1. Products: Subject to compliance with requirements, available products that may be incorporated into the Work include, but are not limited to, the following:

a. Gemco; Clutch Clip.

D. Anchor Adhesive: Product with demonstrated capability to bond insulation anchors securely to substrates indicated without damaging insulation, fasteners and substrates.

1. Products: Subject to compliance with requirements, available products that may be incorporated into the Work include, but are not limited to, the following:

a. AGM Industries, Inc.; TACTOO Adhesive.
b. Gemco; Tuff Bond Hanger Adhesive.

PART 3 - EXECUTION

3.1 PREPARATION

A. Clean substrates of substances that are harmful to insulation or that interfere with insulation attachment.

3.2 INSTALLATION, GENERAL

A. Comply with insulation manufacturer's written instructions applicable to products and applications indicated.

B. Install insulation that is undamaged, dry, and unsoiled and that has not been left exposed to ice, rain, or snow at any time.

C. Extend insulation to envelop entire area to be insulated. Cut and fit tightly around obstructions and fill voids with insulation. Remove projections that interfere with placement.

D. Provide sizes to fit applications indicated and selected from manufacturer's standard thicknesses, widths, and lengths. Apply single layer of insulation units to produce thickness indicated unless multiple layers are otherwise shown or required to make up total thickness.

NOT FOR BIDDING

3.3 INSTALLATION OF BELOW-GRADE INSULATION

A. On vertical surfaces, set insulation units loosely laid according to manufacturer's written instructions.

1. If not otherwise indicated, extend insulation a minimum of 24 inches (610 mm) below exterior grade line.

B. On horizontal surfaces, loosely lay insulation units according to manufacturer's written instructions. Stagger end joints and tightly abut insulation units.

1. If not otherwise indicated, extend insulation a minimum of 24 inches (610 mm) in from exterior walls.

3.4 INSTALLATION OF INSULATION FOR FRAMED CONSTRUCTION

A. Apply insulation units to substrates by method indicated, complying with manufacturer's written instructions. If no specific method is indicated, bond units to substrate with adhesive or use mechanical anchorage to provide permanent placement and support of units.

B. Foam-Plastic Board Insulation: Seal joints between units by applying adhesive, mastic, or sealant to edges of each unit to form a tight seal as units are shoved into place. Fill voids in completed installation with adhesive, mastic, or sealant as recommended by insulation manufacturer.

C. Glass-Fiber or Mineral-Wool Blanket Insulation: Install in cavities formed by framing members according to the following requirements:

1. Use insulation widths and lengths that fill the cavities formed by framing members. If more than one length is required to fill the cavities, provide lengths that will produce a snug fit between ends.
2. Place insulation in cavities formed by framing members to produce a friction fit between edges of insulation and adjoining framing members.
3. Maintain 3-inch (76-mm) clearance of insulation around recessed lighting fixtures not rated for or protected from contact with insulation.
4. Install eave ventilation troughs between roof framing members in insulated attic spaces at vented eaves.
5. For metal-framed wall cavities where cavity heights exceed 96 inches (2438 mm), support unfaced blankets mechanically and support faced blankets by taping flanges of insulation to flanges of metal studs.
6. For wood-framed construction, install blankets according to ASTM C 1320 and as follows:

   a. With faced blankets having stapling flanges, secure insulation by inset, stapling flanges to sides of framing members.
   b. With faced blankets having stapling flanges, lap blanket flange over flange of adjacent blanket to maintain continuity of vapor retarder once finish material is installed over it.

NOT FOR BIDDING

7. Vapor-Retarder-Faced Blankets: Tape joints and ruptures in vapor-retarder facings, and seal each continuous area of insulation to ensure airtight installation.

   a. Exterior Walls: Set units with facing placed toward interior of construction.

3.5 INSTALLATION OF INSULATION IN CEILINGS FOR SOUND ATTENUATION

A. Where glass-fiber blankets are indicated for sound attenuation above ceilings, install blanket insulation over entire ceiling area in thicknesses indicated. Extend insulation 48 inches (1219 mm) up either side of partitions.

3.6 PROTECTION

A. Protect installed insulation from damage due to harmful weather exposures, physical abuse, and other causes. Provide temporary coverings or enclosures where insulation is subject to abuse and cannot be concealed and protected by permanent construction immediately after installation.

3.7 INSULATION SCHEDULE

A. Insulation Type 1: Extruded-polystyrene board insulation, foundation insulation.

B. Insulation Type 2: Polyisocyanurate tapered board insulation, over plywood deck, under EPDM roofing.

C. Insulation Type 3: Unfaced, glass-fiber blanket insulation, sound insulation for interior walls.

D. Insulation Type 4: Faced, glass-fiber blanket insulation, exterior wall and roof insulation.

END OF SECTION 072100

NOT FOR BIDDING

SECTION 072500 - WEATHER BARRIERS

PART 1 - GENERAL

1.1 RELATED DOCUMENTS

A. Drawings and general provisions of the Contract, including General and Supplementary Conditions and Division 01 Specification Sections, apply to this Section.

1.2 SUMMARY

A. Section Includes:

1. Building wrap.
2. Flexible flashing.

B. Related Requirements:

1. Division 06 Section "Sheathing" for sheathing joint and penetration treatment.

1.3 ACTION SUBMITTALS

A. Product Data: For each type of product.

1. For building wrap, include data on air and water-vapor permeance based on testing according to referenced standards.

1.4 INFORMATIONAL SUBMITTALS

A. Evaluation Reports: For water-resistive barrier and flexible flashing, from ICC-ES.

PART 2 - PRODUCTS

2.1 WATER-RESISTIVE BARRIER

A. Building Wrap: ASTM E 1677, Type I air barrier; with flame-spread and smoke-developed indexes of less than 25 and 450, respectively, when tested according to ASTM E 84; UV stabilized; and acceptable to authorities having jurisdiction.

1. Products: Subject to compliance with requirements, available products that may be incorporated into the Work include, but are not limited to, the following:

a. Dow Chemical Company (The); Styrofoam Weathermate Plus Brand Housewrap.
b. DuPont (E. I. du Pont de Nemours and Company); Tyvek CommercialWrap.

NOT FOR BIDDING

c. Ludlow Coated Products; Barricade Building Wrap.
d. Pactiv, Inc.; GreenGuard Ultra Wrap.
e. Raven Industries Inc.; Fortress Pro Weather Protective Barrier.
f. Reemay, Inc.; Typar HouseWrap.

2. Water-Vapor Permeance: Not less than 50 g through 1 sq. m of surface in 24 hours per ASTM E 96/E 96M, Desiccant Method (Procedure A).
3. Air Permeance: Not more than 0.004 cfm/sq. ft. at 0.3-inch wg (0.02 L/s x sq. m at 75 Pa) when tested according to ASTM E 2178.
4. Allowable UV Exposure Time: Not less than three months.

B. Building-Wrap Tape: Pressure-sensitive plastic tape recommended by building-wrap manufacturer for sealing joints and penetrations in building wrap.

2.2 MISCELLANEOUS MATERIALS

A. Flexible Flashing: Composite, self-adhesive, flashing product consisting of a pliable, butyl rubber or rubberized-asphalt compound, bonded to a high-density polyethylene film, aluminum foil, or spunbonded polyolefin to produce an overall thickness of not less than [0.025 inch (0.6 mm)] [0.030 inch (0.8 mm)] [0.040 inch (1.0 mm)].

1. Products: Subject to compliance with requirements, available products that may be incorporated into the Work include, but are not limited to, the following:

a. DuPont (E. I. du Pont de Nemours and Company); DuPont Flashing Tape.
b. Grace Construction Products, a unit of W. R. Grace & Co. - Conn.; Vycor Butyl Self Adhered Flashing.
c. Protecto Wrap Company; BT-25 XL.
d. Raven Industries Inc.; Fortress Flashshield.
e. Advanced Building Products Inc.; Wind-o-wrap.
f. Carlisle Coating & Waterproofing; CCW-705-TWF Thru-Wall Flashing.
g. Fiberweb, Clark Hampshirbeam Corp.; Aquaflash 500.
h. Grace Construction Products, a unit of W. R. Grace & Co. - Conn.; Vycor Plus Self-Adhered Flashing.
i. MFM Building Products Corp.; Window Wrap.
j. Polyguard Products, Inc.; Polyguard JT-20 Tape.
k. Sandell Manufacturing Co., Inc.; Presto-Seal.

B. Primer for Flexible Flashing: Product recommended by manufacturer of flexible flashing for substrate.

C. Nails and Staples: ASTM F 1667.

NOT FOR BIDDING

PART 3 - EXECUTION

3.1 WATER-RESISTIVE BARRIER INSTALLATION

A. Cover exposed exterior surface of sheathing with water-resistive barrier securely fastened to framing immediately after sheathing is installed.

B. Cover sheathing with water-resistive barrier as follows:

1. Cut back barrier 1/2 inch (13 mm) on each side of the break in supporting members at expansion- or control-joint locations.
2. Apply barrier to cover vertical flashing with a minimum 4-inch (100-mm) overlap unless otherwise indicated.

C. Building Paper: Apply horizontally with a 2-inch (50-mm) overlap and a 6-inch (150-mm) end lap; fasten to sheathing with galvanized staples or roofing nails.

D. Building Wrap: Comply with manufacturer's written instructions.

1. Seal seams, edges, fasteners, and penetrations with tape.
2. Extend into jambs of openings and seal corners with tape.

3.2 FLEXIBLE FLASHING INSTALLATION

A. Apply flexible flashing where indicated to comply with manufacturer's written instructions.

1. Prime substrates as recommended by flashing manufacturer.
2. Lap seams and junctures with other materials at least 4 inches (100 mm) except that at flashing flanges of other construction, laps need not exceed flange width.
3. Lap flashing over water-resistive barrier at bottom and sides of openings.
4. Lap water-resistive barrier over flashing at heads of openings.
5. After flashing has been applied, roll surfaces with a hard rubber or metal roller to ensure that flashing is completely adhered to substrates.

END OF SECTION 072500

NOT FOR BIDDING

(PAGE LEFT BLANK)

NOT FOR BIDDING

SECTION 073113 - ASPHALT SHINGLES

PART 1 - GENERAL

1.1 RELATED DOCUMENTS

A. Drawings and general provisions of the Contract, including General and Supplementary Conditions and Division 01 Specification Sections, apply to this Section.

1.2 SUMMARY

A. Section Includes:

1. Asphalt shingles.
2. Ridge vents.
3. Underlayment.

B. Related Sections:

1. Division 06 Section "Rough Carpentry" for wood framing.
2. Division 06 Section "Sheathing" for roof deck wood structural panels and roof sheathing.
3. Division 07 Section "Sheet Metal Flashing and Trim" for metal roof penetration flashings, counterflashings and flashings.

1.3 DEFINITION

A. Roofing Terminology: See ASTM D 1079 and glossary of NRCA's "The NRCA Roofing and Waterproofing Manual" for definitions of terms related to roofing work in this Section.

1.4 ACTION SUBMITTALS

A. Product Data: For each type of product indicated.

1. Include similar Samples of trim and accessories involving color selection.

B. Samples for Verification: For the following products, of sizes indicated, to verify color selected:

1. Asphalt Shingle: Full size.
2. Ridge Vent: 12-inch- (300-mm-) long Sample.
3. Self-Adhering Underlayment: 12 inches (300 mm) square.

1.5 INFORMATIONAL SUBMITTALS

A. Qualification Data: For qualified Installer.

NOT FOR BIDDING

B. Product Test Reports: Based on evaluation of comprehensive tests performed by manufacturer and witnessed by a qualified testing agency, for asphalt shingles.

C. Warranties: Sample of special warranties.

1.6 CLOSEOUT SUBMITTALS

A. Maintenance Data: For each type of asphalt shingle to include in maintenance manuals.

1.7 MAINTENANCE MATERIAL SUBMITTALS

A. Furnish extra materials that match products installed and that are packaged with protective covering for storage and identified with labels describing contents.

1. Asphalt Shingles: 100 sq. ft (9.3 sq. m of each type, in unbroken bundles.

1.8 QUALITY ASSURANCE

A. Installer Qualifications: Manufacturer's authorized representative who is trained and approved for installation of units required for this Project.

B. Source Limitations: Obtain ridge and hip caps, shingles felt underlayment and self-adhering sheet underlayment from single source from single manufacturer.

C. Fire-Resistance Characteristics: Where indicated, provide asphalt shingles and related roofing materials identical to those of assemblies tested for fire resistance per test method below by UL or another testing and inspecting agency acceptable to authorities having jurisdiction. Identify products with appropriate markings of applicable testing agency.

1. Exterior Fire-Test Exposure: ASTM E 108 or UL 790, for application and roof slopes indicated.

D. Preinstallation Conference: Conduct conference at Project site.

1.9 DELIVERY, STORAGE, AND HANDLING

A. Store roofing materials in a dry, well-ventilated, weathertight location according to asphalt shingle manufacturer's written instructions. Store underlayment rolls on end on pallets or other raised surfaces. Do not double stack rolls.

1. Handle, store, and place roofing materials in a manner to avoid significant or permanent damage to roof deck or structural supporting members.

B. Protect unused underlayment from weather, sunlight, and moisture when left overnight or when roofing work is not in progress.

NOT FOR BIDDING

1.10 PROJECT CONDITIONS

A. Environmental Limitations: Do not deliver or install asphalt shingles until spaces are enclosed and weathertight, wet work in spaces is complete and dry, and temporary HVAC system is operating and maintaining ambient temperature and humidity conditions at occupancy levels during the remainder of the construction period.

1. Install self-adhering sheet underlayment within the range of ambient and substrate temperatures recommended by manufacturer.

1.11 WARRANTY

A. Special Warranty: Standard form in which manufacturer agrees to repair or replace asphalt shingles that fail in materials or workmanship within specified warranty period.

1. Failures include, but are not limited to, the following:

a. Manufacturing defects.
b. Structural failures including failure of asphalt shingles to self-seal after a reasonable time.

2. Material Warranty Period: 40 years from date of Substantial Completion, prorated, with first five years nonprorated.
3. Wind-Speed Warranty Period: Asphalt shingles will resist blow-off or damage caused by wind speeds up to 100 mph (45 m/s) for 10 years from date of Substantial Completion.
4. Algae-Discoloration Warranty Period: Asphalt shingles will not discolor 10 years from date of Substantial Completion.
5. Workmanship Warranty Period: 10 years from date of Substantial Completion.

B. Special Project Warranty: Roofing Installer's Warranty, or warranty form at end of this Section, signed by roofing Installer, covering the Work of this Section, in which roofing Installer agrees to repair or replace components of asphalt shingle roofing that fail in materials or workmanship within specified warranty period.

1. Warranty Period: Five years from date of Substantial Completion.

PART 2 - PRODUCTS

2.1 GLASS-FIBER-REINFORCED ASPHALT SHINGLES

A. Laminated-Strip Asphalt Shingles: ASTM D 3462, laminated, multi-ply overlay construction, glass-fiber reinforced, mineral-granule surfaced, and self-sealing.

1. Basis-of-Design Product: Subject to compliance with requirements, provide Timberline® Prestique® 40 High Definition Shingles, by GAF-Elk or comparable product by one of the following:

a. Atlas Roofing Corporation.
b. CertainTeed Corporation.

NOT FOR BIDDING

c. Emco Building Products Corp.
d. IKO.
e. Malarkey Roofing Products.
f. Owens Corning.
g. PABCO Roofing Products.
h. TAMKO Roofing Products, Inc.

2. Butt Edge: Straight cut.
3. Strip Size: Manufacturer's standard.
4. Algae Resistance: Granules treated to resist algae discoloration.
5. Color and Blends: To be selected by Architect from manufacturer's full range of colors.

2.2 UNDERLAYMENT MATERIALS

A. Felt: ASTM D 4869, Type 2, asphalt-saturated organic felts, nonperforated.

B. Self-Adhering Sheet Underlayment, Granular Surfaced: ASTM D 1970, minimum of 55-mil-(1.4-mm-) thick sheet; glass-fiber-mat-reinforced, SBS-modified asphalt; mineral-granule surfaced; with release paper backing; cold applied.

1. Basis-of-Design Product: Subject to compliance with requirements, provide WeatherWatch® Leak Barrier, by GAF-Elk or comparable product by one of the following:

a. ALCO-NVC Inc.
b. Atlas Roofing Corporation.
c. Carlisle Coatings & Waterproofing, Inc.
d. CertainTeed Corporation.
e. Henry Company.

C. Starter Strip: Self-adhering, self-healing, bituminous leak barrier surfaced with fine, skid-resistant granules.

1. Basis-of-Design Product: Subject to compliance with requirements, provide WeatherWatch® Leak Barrier, by GAF-Elk or comparable product by one of the following:

a. ALCO-NVC Inc.
b. Atlas Roofing Corporation.
c. Carlisle Coatings & Waterproofing, Inc.
d. CertainTeed Corporation.
e. Henry Company.

2.3 RIDGE VENTS

A. Rigid Ridge Vent: Manufacturer's standard, rigid section high-density polypropylene or other UV-stabilized plastic ridge vent with; for use under ridge shingles.

NOT FOR BIDDING

1. Basis-of-Design Product: Subject to compliance with requirements, provide Air Vent, Inc. , ShingleVent II or comparable product.:
   a. Cor-A-Vent
   b. GAF Materials Corp.
   c. Owens Corning
   d. Lomanco, Inc.

2.4 ACCESSORIES

A. Asphalt Roofing Cement: ASTM D 4586, Type II, asbestos free.

B. Roofing Nails: ASTM F 1667; aluminum, stainless-steel, copper, or hot-dip galvanized-steel wire shingle nails, minimum 0.120-inch- (3-mm-) diameter, smooth shank, sharp-pointed, with a minimum 3/8-inch- (9.5-mm-) diameter flat head and of sufficient length to penetrate 3/4 inch (19 mm) into solid wood decking or extend at least 1/8 inch (3 mm) through OSB or plywood sheathing.

   1. Where nails are in contact with metal flashing, use nails made from same metal as flashing.

C. Felt Underlayment Nails: Aluminum, stainless-steel, or hot-dip galvanized-steel wire with low-profile capped heads or disc caps, 1-inch (25-mm) minimum diameter.

2.5 METAL FLASHING AND TRIM

A. General: Comply with requirements in Division 07 Section "Sheet Metal Flashing and Trim."

   1. Sheet Metal: Clear anodized aluminum.

B. Fabricate sheet metal flashing and trim to comply with recommendations in SMACNA's "Architectural Sheet Metal Manual" that apply to design, dimensions, metal, and other characteristics of the item.

   1. Apron Flashings: Fabricate with lower flange a minimum of 5 inches (125 mm) over and 4 inches (100 mm) beyond each side of downslope asphalt shingles and 6 inches (150 mm) up the vertical surface.
   2. Step Flashings: Fabricate with a headlap of 2 inches (50 mm) and a minimum extension of 5 inches (125 mm) over the underlying asphalt shingle and up the vertical surface.
   3. Drip Edges: Fabricate in lengths not exceeding [10 feet (3 m)] with 2-inch (50-mm) roof-deck flange and 1-1/2-inch (38-mm) fascia flange with 3/8-inch (9.6-mm) drip at lower edge.
   4. Rain Diverter: Fabricate in lengths not exceeding [10 feet (3 m)] with 12-inch (50-mm) roof-deck flange and 1-1/2-inch (38-mm) fascia flange with 3/8-inch (9.6-mm) bent at top edge.

C. Vent Pipe Flashings: ASTM B 749, Type L51121, at least 1/16 inch (1.6 mm) thick. Provide lead sleeve sized to slip over and turn down into pipe, soldered to skirt at slope of roof, and extending at least 4 inches (100 mm) from pipe onto roof.

NOT FOR BIDDING

PART 3 - EXECUTION

3.1 EXAMINATION

A. Examine substrates, areas, and conditions, with Installer present, for compliance with requirements for installation tolerances and other conditions affecting performance of the Work.

1. Examine roof sheathing to verify that sheathing joints are supported by framing and blocking or metal clips and that installation is within flatness tolerances.
2. Verify that substrate is sound, dry, smooth, clean, sloped for drainage, and completely anchored; and that provision has been made for flashings and penetrations through asphalt shingles.

B. Prepare written report, endorsed by Installer, listing conditions detrimental to performance of the Work.

C. Proceed with installation only after unsatisfactory conditions have been corrected.

3.2 UNDERLAYMENT INSTALLATION

A. General: Comply with underlayment manufacturer's written installation instructions applicable to products and applications indicated unless more stringent requirements apply.

B. Double-Layer Felt Underlayment: Install on roof deck parallel with and starting at the eaves. Install a 19-inch- (485-mm-) wide starter course at eaves and completely cover with full-width second course. Install succeeding courses lapping previous courses 19 inches (485 mm) in shingle fashion. Lap ends a minimum of 6 inches (150 mm). Stagger end laps between succeeding courses at least 72 inches (1830 mm). Fasten with roofing nails.

1. Apply a continuous layer of asphalt roofing cement over starter course and on felt underlayment surface to be concealed by succeeding courses as each felt course is installed. Apply over entire roof.
2. Install felt underlayment on roof sheathing not covered by self-adhering sheet underlayment. Lap edges over self-adhering sheet underlayment not less than 3 inches (75 mm) in direction to shed water.
3. Terminate felt underlayment extended up not less than 4 inches (100 mm) against sidewalls, curbs, chimneys, and other roof projections.
4. Install fasteners at no more than 36 inch (900 mm) o.c.

C. Self-Adhering Sheet Underlayment: Install, wrinkle free, on roof deck. Comply with low-temperature installation restrictions of underlayment manufacturer if applicable. Install at locations indicated below, lapped in direction to shed water. Lap sides not less than 3-1/2 inches (89 mm). Lap ends not less than 6 inches (150 mm) staggered 24 inches (600 mm) between courses. Roll laps with roller. Cover underlayment within seven days.

1. Eaves: Extend from edges of eaves 36 inches (914 mm) beyond interior face of exterior wall.
2. Rakes: Extend from edges of rake 36 inches (914 mm) beyond interior face of exterior wall.

NOT FOR BIDDING

3. Valleys: Extend from lowest to highest point 18 inches (450 mm) on each side.
4. Ridges: Extend 36 inches (914 mm) on each side.
5. Sidewalls: Extend beyond sidewall 18 inches (450 mm), and return vertically against sidewall not less than 4 inches (100 mm).
6. Dormers, Chimneys, Skylights, and Other Roof-Penetrating Elements: Extend beyond penetrating element 18 inches (450 mm), and return vertically against penetrating element not less than 4 inches (100 mm).
7. Roof Slope Transitions: Extend 18 inches (450 mm) on each roof slope.

3.3 METAL FLASHING INSTALLATION

A. General: Install metal flashings and other sheet metal to comply with requirements in Division 07 Section "Sheet Metal Flashing and Trim."

1. Install metal flashings according to recommendations in ARMA's "Residential Asphalt Roofing Manual" and asphalt shingle recommendations in NRCA's "The NRCA Roofing and Waterproofing Manual."

B. Apron Flashings: Extend lower flange over and beyond each side of downslope asphalt shingles and up the vertical surface.

C. Step Flashings: Install with a headlap of 2 inches (50 mm) and extend over the underlying asphalt shingle and up the vertical surface. Fasten to roof deck only.

D. Rake Drip Edges: Install rake drip edge flashings over underlayment and fasten to roof deck.

E. Eave Drip Edges: Install eave drip edge flashings below underlayment and fasten to roof sheathing.

F. Pipe Flashings: Form flashing around pipe penetrations and asphalt shingles. Fasten and seal to asphalt shingles as recommended by manufacturer.

3.4 ASPHALT SHINGLE INSTALLATION

A. General: Install asphalt shingles according to manufacturer's written instructions, recommendations in ARMA's "Residential Asphalt Roofing Manual," and asphalt shingle recommendations in NRCA's "The NRCA Roofing and Waterproofing Manual."

B. Install starter strip along lowest roof edge, consisting of an asphalt shingle strip at least 7 inches (175 mm) wide with self-sealing strip face up at roof edge.

1. Extend asphalt shingles 1/2 inch (13 mm) over fasciae at eaves and rakes.
2. Install starter strip along rake edge.

C. Install first and remaining courses of asphalt shingles stair-stepping diagonally across roof deck with manufacturer's recommended offset pattern at succeeding courses, maintaining uniform exposure.

D. Fasten asphalt shingle strips with roofing nails located according to manufacturer's written instructions.

NOT FOR BIDDING

1. Where roof slope is less than 4:12, seal asphalt shingles with asphalt roofing cement spots.
2. When ambient temperature during installation is below 50 deg F (10 deg C), seal asphalt shingles with asphalt roofing cement spots.

E. Woven Valleys: Extend succeeding asphalt shingle courses from both sides of valley 12 inches (300 mm) beyond center of valley, weaving intersecting shingle-strip courses over each other. Use one-piece shingle strips without joints in valley.

1. Do not nail asphalt shingles within 6 inches (150 mm) of valley center.

F. Ridge Cap Shingles: Maintain same exposure of cap shingles as roofing shingle exposure. Lap cap shingles at ridges to shed water away from direction of prevailing winds. Fasten with roofing nails of sufficient length to penetrate sheathing.

1. Fasten ridge cap asphalt shingles to cover ridge vent without obstructing airflow.

3.5 ROOFING INSTALLER'S WARRANTY

A. WHEREAS <**Insert name**> of <**Insert address**>, herein called the "Roofing Installer," has performed roofing and associated work ("work") on the following project:

1. Owner: <**Insert name of Owner**>.
2. Address: <**Insert address**>.
3. Building Name/Type: <**Insert information**>.
4. Address: <**Insert address**>.
5. Area of Work: <**Insert information**>.
6. Acceptance Date: <**Insert date**>.
7. Warranty Period: <**Insert time**>.
8. Expiration Date: <**Insert date**>.

B. AND WHEREAS Roofing Installer has contracted (either directly with Owner or indirectly as a subcontractor) to warrant said work against leaks and faulty or defective materials and workmanship for designated Warranty Period,

C. NOW THEREFORE Roofing Installer hereby warrants, subject to terms and conditions herein set forth, that during Warranty Period he will, at his own cost and expense, make or cause to be made such repairs to or replacements of said work as are necessary to correct faulty and defective work and as are necessary to maintain said work in a watertight condition.

D. This Warranty is made subject to the following terms and conditions:

1. Specifically excluded from this Warranty are damages to work and other parts of the building and to building contents, caused by:

a. Lightning;
b. Peak gust wind speed exceeding <**Insert wind speed**> mph (m/sec);
c. Fire;
d. Failure of roofing system substrate, including cracking, settlement, excessive deflection, deterioration, and decomposition;

NOT FOR BIDDING

e. Faulty construction of parapet walls, copings, chimneys, skylights, vents, equipment supports, and other edge conditions and penetrations of the work;
f. Vapor condensation on bottom of roofing; and
g. Activity on roofing by others, including construction contractors, maintenance personnel, other persons, and animals, whether authorized or unauthorized by Owner.

2. When work has been damaged by any of foregoing causes, Warranty shall be null and void until such damage has been repaired by Roofing Installer and until cost and expense thereof have been paid by Owner or by another responsible party so designated.
3. Roofing Installer is responsible for damage to work covered by this Warranty but is not liable for consequential damages to building or building contents resulting from leaks or faults or defects of work.
4. During Warranty Period, if Owner allows alteration of work by anyone other than Roofing Installer, including cutting, patching and maintenance in connection with penetrations, attachment of other work, and positioning of anything on roof, this Warranty shall become null and void on date of said alterations, but only to the extent said alterations affect work covered by this Warranty. If Owner engages Roofing Installer to perform said alterations, Warranty shall not become null and void unless Roofing Installer, before starting said work, shall have notified Owner in writing, showing reasonable cause for claim, that said alterations would likely damage or deteriorate work, thereby reasonably justifying a limitation or termination of this Warranty.
5. During Warranty Period, if original use of roof is changed and it becomes used for, but was not originally specified for, a promenade, work deck, spray-cooled surface, flooded basin, or other use or service more severe than originally specified, this Warranty shall become null and void on date of said change, but only to the extent said change affects work covered by this Warranty.
6. Owner shall promptly notify Roofing Installer of observed, known, or suspected leaks, defects, or deterioration and shall afford reasonable opportunity for Roofing Installer to inspect work and to examine evidence of such leaks, defects, or deterioration.
7. This Warranty is recognized to be the only warranty of Roofing Installer on said work and shall not operate to restrict or cut off Owner from other remedies and resources lawfully available to Owner in cases of roofing failure. Specifically, this Warranty shall not operate to relieve Roofing Installer of responsibility for performance of original work according to requirements of the Contract Documents, regardless of whether Contract was a contract directly with Owner or a subcontract with Owner's General Contractor.

E. IN WITNESS WHEREOF, this instrument has been duly executed this <**Insert day**> day of <**Insert month**>, <**Insert year**>.

1. Authorized Signature: <**Insert signature**>.
2. Name: <**Insert name**>.
3. Title: <**Insert title**>.

END OF SECTION 073113

NOT FOR BIDDING

(PAGE LEFT BLANK)

NOT FOR BIDDING

SECTION 074113 - METAL ROOF PANELS (ALTERNATE 1, 4A & 5A)

PART 1 - GENERAL

1.1 RELATED DOCUMENTS

A. Drawings and general provisions of the Contract, including General and Supplementary Conditions and Division 01 Specification Sections, apply to this Section.

1.2 SUMMARY

A. Section Includes:

1. Standing-seam metal roof panels.

B. Related Sections:

1. Division 05 Section "Cold-Formed Metal Framing" for cold-formed metal framing supporting metal roof panels.
2. Division 07 Section "Sheet Metal Flashing and Trim" for field-formed fasciae, copings, flashings, roof drainage systems, and other sheet metal work not part of metal roof panel assemblies.
3. Division 07 Section "Joint Sealants" for field-applied sealants not otherwise specified in this Section.
4. Division 077253 “Snow Guards” for application for metal roof system.

1.3 DEFINITIONS

A. Metal Roof Panel Assembly: Metal roof panels, attachment system components, miscellaneous metal framing, thermal insulation, and accessories necessary for a complete weathertight roofing system.

1.4 PERFORMANCE REQUIREMENTS

A. General Performance: Metal roof panels shall comply with performance requirements without failure due to defective manufacture, fabrication, installation, or other defects in construction.

B. Delegated Design: Design metal roof panel assembly, including comprehensive engineering analysis by a qualified professional engineer, using performance requirements and design criteria indicated.

C. Air Infiltration: No air leakage through assembly when tested according to ASTM E 1680.

D. Water Penetration: No water penetration when tested according to ASTM E 1646.

E. Hydrostatic-Head Resistance: No water penetration when tested according to ASTM E 2140.

NOT FOR BIDDING

F. Wind-Uplift Resistance: Provide metal roof panel assemblies that comply with UL 580 for wind-uplift-resistance class indicated.

1. Uplift Rating: UL 90.

G. FMG Listing: Provide metal roof panels and component materials that comply with requirements in FMG 4471 as part of a panel roofing system and that are listed in FMG's "Approval Guide" for Class 1 or noncombustible construction, as applicable. Identify materials with FMG markings.

1. Fire/Windstorm Classification: Class 1A-90.
2. Hail Resistance: MH.

H. Structural Performance: Provide metal roof panel assemblies capable of withstanding the effects of gravity loads and the following loads and stresses within limits and under conditions indicated, based on testing according to ASTM E 1592:

1. Wind Loads: Determine loads based on the following minimum design wind pressures:

a. Uniform pressure of 30 lbf/sq. ft. (1436 Pa), acting inward or outward.
b. Uniform pressure as indicated on Drawings.

2. Snow Loads: 35 lbf/sq. ft. (1676 Pa).
3. Deflection Limits: Metal roof panel assemblies shall withstand wind and snow loads with vertical deflections no greater than 1/240 of the span.

I. Thermal Movements: Allow for thermal movements resulting from ambient and surface temperature changes. Base calculations on surface temperatures of materials due to both solar heat gain and nighttime-sky heat loss.

1. Temperature Change (Range): 120 deg F (67 deg C), ambient; 180 deg F (100 deg C), material surfaces.

J. Thermal Performance: Provide insulated metal roof panel assemblies with thermal-resistance value (R-value) indicated when tested according to ASTM C 518.

1.5 ACTION SUBMITTALS

A. Product Data: For each type of product indicated. Include construction details, material descriptions, dimensions of individual components and profiles, and finishes for each type of roof panel and accessory.

B. Shop Drawings: Show fabrication and installation layouts of metal roof panels; details of edge conditions, side-seam and endlap joints, panel profiles, corners, anchorages, trim, flashings, closures, and accessories; and special details. Distinguish between factory- and field-assembled work.

1. Accessories: Include details of the following items, at a scale of not less than 1-1/2 inches per 12 inches (1:10):

a. Flashing and trim.

NOT FOR BIDDING

b. Snow guards.

C. Samples for Initial Selection: For each type of metal roof panel indicated with factory-applied color finishes.

1. Include similar Samples of trim and accessories involving color selection.

D. Samples for Verification: For each type of exposed finish required, prepared on Samples of size indicated below:

1. Metal Roof Panels: 12 inches (300 mm) long by actual panel width. Include fasteners, clips, battens, closures, and other metal roof panel accessories.
2. Trim and Closures: 12 inches (300 mm) long. Include fasteners and other exposed accessories.
3. Accessories: 12-inch- (300-mm-) long Samples for each type of accessory.

E. Delegated-Design Submittal: For metal roof panel assembly indicated to comply with performance requirements and design criteria, including analysis data signed and sealed by the qualified professional engineer responsible for their preparation.

1. Snow Retention System Calculations: Include calculation of number and location of snow guards based on snow load, roof slope, panel length and finish, and seam type and spacing.

1.6 INFORMATIONAL SUBMITTALS

A. Coordination Drawings: Roof plans, drawn to scale, on which the following are shown and coordinated with each other, based on input from installers of the items involved:

1. Roof panels and attachments.
2. Purlins and rafters.
3. Roof-mounted items including roof hatches, equipment supports, pipe supports and penetrations, lighting fixtures, snow guards, and items mounted on roof curbs.

B. Manufacturer Certificates: Signed by manufacturer certifying that roof panels comply with energy performance requirements specified in "Performance Requirements" Article.

1. Submit evidence of meeting performance requirements.

C. Qualification Data: For qualified Installer.

D. Material Certificates: For thermal insulation and vapor retarders, from manufacturer.

E. Product Test Reports: Based on evaluation of comprehensive tests performed by a qualified testing agency, for each product.

F. Field quality control reports.

G. Warranties: Samples of special warranties.

NOT FOR BIDDING

1.7 CLOSEOUT SUBMITTALS

A. Maintenance Data: For metal roof panels to include in maintenance manuals.

1.8 QUALITY ASSURANCE

A. Installer Qualifications: An employer of workers trained and approved by manufacturer.

B. Testing Agency Qualifications: Qualified according to ASTM E 329 for testing indicated.

C. Source Limitations: Obtain each type of metal roof panels from single source from single manufacturer.

D. Surface-Burning Characteristics: Provide metal roof panels having insulation core material with the following surface-burning characteristics as determined by testing identical products according to ASTM E 84 by a qualified testing agency. Identify products with appropriate markings of applicable testing agency.

1. Flame-Spread Index: 25 or less.
2. Smoke-Developed Index: 450 or less.

E. Fire-Resistance Ratings: Where indicated, provide metal roof panels identical to those of assemblies tested for fire resistance per ASTM E 119 by a qualified testing agency. Identify products with appropriate markings of applicable testing agency.

1. Indicate design designations from UL's "Fire Resistance Directory" or from the listings of another qualified testing agency.
2. Combustion Characteristics: ASTM E 136.

F. Mockups: Build mockups to verify selections made under sample submittals and to demonstrate aesthetic effects and set quality standards for fabrication and installation.

1. Build mockup of typical roof eave, including fascia, and soffit as shown on Drawings; approximately four panels wide by full eave width, including insulation, underlayment, attachments, and accessories.
2. Approval of mockups does not constitute approval of deviations from the Contract Documents contained in mockups unless Architect specifically approves such deviations in writing.
3. Approved mockups may become part of the completed Work if undisturbed at time of Substantial Completion.

G. Preinstallation Conference: Conduct conference at Project site.

1. Meet with Owner, Architect, Owner's insurer if applicable, testing and inspecting agency representative, metal roof panel Installer, metal roof panel manufacturer's representative, Installer, and installers whose work interfaces with or affects metal roof panels including installers of roof accessories and roof-mounted equipment.
2. Review and finalize construction schedule and verify availability of materials, Installer's personnel, equipment, and facilities needed to make progress and avoid delays.

NOT FOR BIDDING

3. Review methods and procedures related to metal roof panel installation, including manufacturer's written instructions.
4. Examine deck substrate conditions for compliance with requirements, including flatness and attachment to structural members.
5. Review structural loading limitations of deck during and after roofing.
6. Review flashings, special roof details, roof drainage, roof penetrations, equipment curbs, and condition of other construction that will affect metal roof panels.
7. Review governing regulations and requirements for insurance, certificates, and testing and inspecting if applicable.
8. Review temporary protection requirements for metal roof panel assembly during and after installation.
9. Review roof observation and repair procedures after metal roof panel installation.
10. Document proceedings, including corrective measures and actions required, and furnish copy of record to each participant.

1.9 DELIVERY, STORAGE, AND HANDLING

A. Deliver components, sheets, metal roof panels, and other manufactured items so as not to be damaged or deformed. Package metal roof panels for protection during transportation and handling.

B. Unload, store, and erect metal roof panels in a manner to prevent bending, warping, twisting, and surface damage.

C. Stack metal roof panels on platforms or pallets, covered with suitable weathertight and ventilated covering. Store metal roof panels to ensure dryness. Do not store metal roof panels in contact with other materials that might cause staining, denting, or other surface damage.

D. Protect strippable protective covering on metal roof panels from exposure to sunlight and high humidity, except to extent necessary for period of metal roof panel installation.

E. Protect foam-plastic insulation as follows:

1. Do not expose to sunlight, except to extent necessary for period of installation and concealment.
2. Protect against ignition at all times. Do not deliver foam-plastic insulation materials to Project site before installation time.
3. Complete installation and concealment of plastic materials as rapidly as possible in each area of construction.

1.10 PROJECT CONDITIONS

A. Weather Limitations: Proceed with installation only when existing and forecasted weather conditions permit metal roof panel work to be performed according to manufacturer's written instructions and warranty requirements.

B. Field Measurements: Verify actual dimensions of construction contiguous with metal roof panels by field measurements before fabrication.

NOT FOR BIDDING

1.11 COORDINATION

A. Coordinate sizes and locations of roof curbs, equipment supports, and roof penetrations with actual equipment provided.

B. Coordinate metal roof panels with rain drainage work, flashing, trim, and construction of decks, parapets, walls, and other adjoining work to provide a leakproof, secure, and noncorrosive installation.

1.12 WARRANTY

A. Special Warranty: Manufacturer's standard form in which manufacturer agrees to repair or replace metal roof panel assemblies that fail in materials or workmanship within specified warranty period.

1. Failures include, but are not limited to, the following:

a. Structural failures including rupturing, cracking, or puncturing.
b. Deterioration of metals, metal finishes, and other materials beyond normal weathering.

2. Warranty Period: Two years from date of Substantial Completion.

B. Special Warranty on Panel Finishes: Manufacturer's standard form in which manufacturer agrees to repair finish or replace metal roof panels that show evidence of deterioration of factory-applied finishes within specified warranty period.

1. Exposed Panel Finish: Deterioration includes, but is not limited to, the following:

a. Color fading more than 5 Hunter units when tested according to ASTM D 2244.
b. Chalking in excess of a No. 8 rating when tested according to ASTM D 4214.
c. Cracking, checking, peeling, or failure of paint to adhere to bare metal.

2. Finish Warranty Period: 20 years from date of Substantial Completion.

C. Special Weathertightness Warranty: Manufacturer's standard form in which manufacturer agrees to repair or replace metal roof panel assemblies that fail to remain weathertight, including leaks, within specified warranty period.

1. Weathertightness Warranty Period: 10 years from date of Substantial Completion.

D. Special Weathertightness Warranty for Standing-Seam Metal Roof Panels: Manufacturer's standard form in which manufacturer agrees to repair or replace standing-seam metal roof panel assemblies that fail to remain weathertight, including leaks, within specified warranty period.

1. Warranty Period: 20 years from date of Substantial Completion.

NOT FOR BIDDING

PART 2 - PRODUCTS

2.1 PANEL MATERIALS

A. Metallic-Coated Steel Sheet: Restricted flatness steel sheet metallic coated by the hot-dip process and prepainted by the coil-coating process to comply with ASTM A 755/A 755M.

1. Zinc-Coated (Galvanized) Steel Sheet: ASTM A 653/A 653M, G90 (Z275) coating designation; structural quality.
2. Surface: Smooth, flat finish.
3. Exposed Coil-Coated Finish:

a. 3-Coat Fluoropolymer: AAMA 621. Fluoropolymer finish containing not less than 70 percent PVDF resin by weight in both color coat and clear topcoat. Prepare, pretreat, and apply coating to exposed metal surfaces to comply with coating and resin manufacturers' written instructions.

4. Concealed Finish: Apply pretreatment and manufacturer's standard white or light-colored acrylic or polyester backer finish, consisting of prime coat and wash coat with a minimum total dry film thickness of 0.5 mil (0.013 mm).

B. Panel Sealants:

1. Sealant Tape: Pressure-sensitive, 100 percent solids, gray polyisobutylene compound sealant tape with release-paper backing. Provide permanently elastic, nonsag, nontoxic, nonstaining tape 1/2 inch (13 mm) wide and 1/8 inch (3 mm) thick.
2. Joint Sealant: ASTM C 920; elastomeric polyurethane, polysulfide, or silicone sealant; of type, grade, class, and use classifications required to seal joints in metal roof panels and remain weathertight, and as recommended in writing by metal roof panel manufacturer.
3. Butyl-Rubber-Based, Solvent-Release Sealant: ASTM C 1311.

2.2 FIELD-INSTALLED THERMAL INSULATION

A. Refer to Division 07 Section "Thermal Insulation."

B. Polyethylene Vapor Retarders: ASTM D 4397, 6 mils (0.15 mm) thick, with maximum permeance rating of 0.13 perm (7.5 ng/Pa x s x sq. m).

C. Faced, Polyisocyanurate Board Insulation: CDX Plywood, with maximum flame-spread and smoke-developed indexes of 75 and 450, respectively, based on tests performed on unfaced core.

2.3 UNDERLAYMENT MATERIALS

A. Self-Adhering, High-Temperature Sheet: 40 mils (1.0 mm) thick minimum, consisting of slip-resisting, polyethylene-film top surface laminated to layer of butyl or SBS-modified asphalt adhesive, with release-paper backing; cold applied. Provide primer when recommended by underlayment manufacturer.

NOT FOR BIDDING

1. Thermal Stability: Stable after testing at 240 deg F (116 deg C); ASTM D 1970.
2. Low-Temperature Flexibility: Passes after testing at minus 20 deg F (29 deg C); ASTM D 1970.
3. Products: Subject to compliance with requirements, available products that may be incorporated into the Work include, but are not limited to, the following:

   a. Carlisle Coatings & Waterproofing Inc., Div. of Carlisle Companies Inc.; CCW WIP 300HT.
   b. Grace Construction Products; a unit of Grace, W. R. & Co.; Ultra.
   c. Henry Company; Blueskin PE200 HT.

B. Slip Sheet: Manufacturer's recommended slip sheet, of type required for application.

2.4 SUBSTRATE BOARDS

A. Plywood: 19/32 Inch.

B. Substrate-Board Fasteners: Factory-coated steel fasteners and metal or plastic plates complying with corrosion-resistance provisions in FMG 4470, designed for fastening substrate board to substrate.

2.5 MISCELLANEOUS METAL FRAMING

A. Miscellaneous Metal Framing, General: ASTM C 645, cold-formed metallic-coated steel sheet, ASTM A 653/A 653M, G40 (Z120) hot dip galvanized or coating with equivalent corrosion resistance unless otherwise indicated.

B. Fasteners for Miscellaneous Metal Framing: Of type, material, size, corrosion resistance, holding power, and other properties required to fasten miscellaneous metal framing members to substrates.

2.6 MISCELLANEOUS MATERIALS

A. Panel Fasteners: Self-tapping screws, bolts, nuts, self-locking rivets and bolts, end-welded studs, and other suitable fasteners designed to withstand design loads. Provide exposed fasteners with heads matching color of metal roof panels by means of plastic caps or factory-applied coating. Provide EPDM, PVC, or neoprene sealing washers.

B. Bituminous Coating: Cold-applied asphalt mastic, SSPC-Paint 12, compounded for 15-mil (0.4-mm) dry film thickness per coat. Provide inert-type noncorrosive compound free of asbestos fibers, sulfur components, and other deleterious impurities.

2.7 STANDING-SEAM METAL ROOF PANELS

A. General: Provide factory-formed metal roof panels designed to be installed by lapping and interconnecting raised side edges of adjacent panels with joint type indicated and mechanically attaching panels to supports using concealed clips in side laps. Include clips, cleats, pressure plates, and accessories required for weathertight installation.

NOT FOR BIDDING

1. Steel Panel Systems: Unless more stringent requirements are indicated, comply with ASTM E 1514.
2. Aluminum Panel Systems: Unless more stringent requirements are indicated, comply with ASTM E 1637.

B. Integral-Standing-Seam Metal Roof Panels: Formed with integral ribs at panel edges and flat pan between ribs; designed for sequential installation by mechanically attaching panels to supports using concealed clips located under one side of panels and lapping and interconnecting side edges of adjacent panels.

1. Basis-of-Design Product: Subject to compliance with requirements, provide Pac-Clad Redi-Roof Standing Seam or comparable product by one of the following:

   a. AEP-Span.
   b. ATAS International, Inc.
   c. Cheney Flashing Company.

2. Material: Zinc-coated (galvanized) steel sheet, 24 ga. nominal thickness.

   a. Exterior Finish: 3-coat fluoropolymer.
   b. Color: To be selected by Architect from manufacturer's full range of colors..

3. Clips: Fixed.

   a. Material: 0.064-inch- (1.63-mm-) nominal thickness, zinc-coated (galvanized) steel sheet.

4. Panel Coverage: 18 inches (457 mm).
5. Panel Height: 1.56 inches (40 mm).

2.8 ACCESSORIES

A. Roof Panel Accessories: Provide components approved by roof panel manufacturer and as required for a complete metal roof panel assembly including trim, copings, fasciae, corner units, ridge closures, clips, flashing, sealants, gaskets, fillers, closure strips, and similar items. Match material and finish of metal roof panels unless otherwise indicated.

1. Closures: Provide closures at eaves and ridges, fabricated of same metal as metal roof panels.
2. Closure Strips: Closed-cell, expanded, cellular, rubber or crosslinked, polyolefin-foam or closed-cell laminated polyethylene; minimum 1-inch- (25-mm-) thick, flexible closure strips cut or premolded to match metal roof panel profile. Provide closure strips where indicated or necessary to ensure weathertight construction.
3. Backing Plates: Provide metal backing plates at panel end splices, fabricated from material recommended by manufacturer.

B. Flashing and Trim: Formed from same material as roof panels, prepainted with coil coating, minimum 0.018 inch (0.45 mm) thick. Provide flashing and trim as required to seal against weather and to provide finished appearance. Locations include, but are not limited to, eaves,

NOT FOR BIDDING

rakes, corners, bases, framed openings, ridges, fasciae, and fillers. Finish flashing and trim with same finish system as adjacent metal roof panels.

C. Snow Guards: See Specification Section 077253.

2.9 FABRICATION

A. Fabricate and finish metal roof panels and accessories at the factory to greatest extent possible, by manufacturer's standard procedures and processes and as necessary to fulfill indicated performance requirements. Comply with indicated profiles and with dimensional and structural requirements.

B. Provide panel profile, including major ribs and intermediate stiffening ribs, if any, for full length of panel.

C. Fabricate metal roof panel side laps with factory-installed captive gaskets or separator strips that provide a tight seal and prevent metal-to-metal contact, in a manner that will seal weathertight and minimize noise from movements within panel assembly.

D. Sheet Metal Accessories: Fabricate flashing and trim to comply with recommendations in SMACNA's "Architectural Sheet Metal Manual" that apply to the design, dimensions, metal, and other characteristics of item indicated.

1. Form exposed sheet metal accessories that are without excessive oil canning, buckling, and tool marks and that are true to line and levels indicated, with exposed edges folded back to form hems.
2. End Seams for Aluminum: Fabricate nonmoving seams with flat-lock seams. Form seams and seal with epoxy seam sealer. Rivet joints for additional strength.
3. End Seams for Other Than Aluminum: Fabricate nonmoving seams with flat-lock seams. Tin edges to be seamed, form seams, and solder.
4. Sealed Joints: Form nonexpansion but movable joints in metal to accommodate elastomeric sealant to comply with SMACNA standards.
5. Conceal fasteners and expansion provisions where possible. Exposed fasteners are not allowed on faces of accessories exposed to view.
6. Fabricate cleats and attachment devices of size and metal thickness recommended by SMACNA's "Architectural Sheet Metal Manual" or by metal roof panel manufacturer for application, but not less than thickness of metal being secured.

2.10 FINISHES

A. Comply with NAAMM's "Metal Finishes Manual for Architectural and Metal Products" for recommendations for applying and designating finishes.

B. Protect mechanical and painted finishes on exposed surfaces from damage by applying a strippable, temporary protective covering before shipping.

C. Appearance of Finished Work: Noticeable variations in same piece are not acceptable. Variations in appearance of adjoining components are acceptable if they are within the range of approved Samples and are assembled or installed to minimize contrast.

NOT FOR BIDDING

PART 3 - EXECUTION

3.1 EXAMINATION

A. Examine substrates, areas, and conditions, with Installer present, for compliance with requirements for installation tolerances, metal roof panel supports, and other conditions affecting performance of the Work.

B. Examine primary and secondary roof framing to verify that rafters, purlins, angles, channels, and other structural panel support members and anchorages have been installed within alignment tolerances required by metal roof panel manufacturer.

C. Examine solid roof sheathing to verify that sheathing joints are supported by framing or blocking and that installation is within flatness tolerances required by metal roof panel manufacturer.

D. Examine roughing-in for components and systems penetrating metal roof panels to verify actual locations of penetrations relative to seam locations of metal roof panels before metal roof panel installation.

E. For the record, prepare written report, endorsed by Installer, listing conditions detrimental to performance of the Work.

F. Proceed with installation only after unsatisfactory conditions have been corrected.

3.2 PREPARATION

A. Clean substrates of substances harmful to insulation, including removing projections capable of interfering with insulation attachment.

B. Substrate Board: Install substrate boards over roof sheathing on entire roof surface. Attach with substrate-board fasteners.

1. Install substrate boards with long joints in continuous straight lines, perpendicular to roof slopes with end joints staggered between rows. Tightly butt substrate boards together.

C. Miscellaneous Framing: Install subpurlins, eave angles, furring, and other miscellaneous roof panel support members and anchorage according to metal roof panel manufacturer's written instructions.

1. Soffit Framing: Wire tie or clip furring channels to supports, as required to comply with requirements for assemblies indicated.

3.3 UNDERLAYMENT INSTALLATION

A. Self-Adhering Sheet Underlayment: Apply primer if required by manufacturer. Comply with temperature restrictions of underlayment manufacturer for installation. Apply over entire area to receive metal roof, wrinkle free, in shingle fashion to shed water, and with end laps of not less than 6 inches (150 mm) staggered 24 inches (600 mm) between courses. Overlap side

NOT FOR BIDDING

edges not less than 3-1/2 inches (90 mm). Roll laps with roller. Cover underlayment within 14 days.

B. Apply slip sheet over underlayment before installing metal roof panels.

C. Install flashings to cover underlayment to comply with requirements specified in Division 07 Section "Sheet Metal Flashing and Trim."

3.4 THERMAL INSULATION INSTALLATION

A. Polyethylene Vapor Retarder: Extend vapor retarder to extremities of areas to be protected from vapor transmission. Repair tears or punctures immediately before concealment by other work.

B. Board Insulation: Extend insulation in thickness indicated to cover entire roof. Comply with installation requirements in Division 07 Section "Thermal Insulation."

1. Erect insulation and hold in place with Z-shaped furring members spaced 24 inches (610 mm)] [600 mm o.c. Securely attach narrow flanges of furring members to roof deck with screws spaced 24 inches (600 mm) o.c.

3.5 METAL ROOF PANEL INSTALLATION, GENERAL

A. Provide metal roof panels of full length from eave to ridge unless otherwise indicated or restricted by shipping limitations.

B. Thermal Movement. Rigidly fasten metal roof panels to structure at one and only one location for each panel. Allow remainder of panel to move freely for thermal expansion and contraction. Predrill panels for fasteners.

1. Point of Fixity: Fasten each panel along a single line of fixing located at eave, ridge, and center of panel length.
2. Avoid attaching accessories through roof panels in a manner that will inhibit thermal movement.

C. Install metal roof panels as follows:

1. Commence metal roof panel installation and install minimum of 300 sq. ft. (27.8 sq. m.) in presence of factory-authorized representative.
2. Field cutting of metal panels by torch is not permitted.
3. Install panels perpendicular to purlins.
4. Locate and space fastenings in uniform vertical and horizontal alignment.
5. Provide metal closures at rake edges, rake walls and each side of ridge caps.
6. Flash and seal metal roof panels with weather closures at eaves, rakes, and perimeter of all openings.
7. Install ridge caps as metal roof panel work proceeds.
8. End Splices: Locate panel end splices over, but not attached to, structural supports. Stagger panel end splices to avoid a four-panel splice condition.
9. Install metal flashing to allow moisture to run over and off metal roof panels.

NOT FOR BIDDING

D. Fasteners:

1. Steel Roof Panels: Use stainless-steel fasteners for surfaces exposed to the exterior and galvanized-steel fasteners for surfaces exposed to the interior.
2. Aluminum Roof Panels: Use aluminum or stainless-steel fasteners for surfaces exposed to the exterior and aluminum or galvanized-steel fasteners for surfaces exposed to the interior.
3. Copper Roof Panels: Use copper, stainless-steel, or hardware-bronze fasteners.

E. Anchor Clips: Anchor metal roof panels and other components of the Work securely in place, using manufacturer's approved fasteners according to manufacturers' written instructions.

F. Metal Protection: Where dissimilar metals will contact each other or corrosive substrates, protect against galvanic action by painting contact surfaces with bituminous coating, by applying rubberized-asphalt underlayment to each contact surface, or by other permanent separation as recommended by metal roof panel manufacturer.

1. Coat back side of roof panels with bituminous coating where roof panels will contact wood, ferrous metal, or cementitious construction.

G. Joint Sealers: Install gaskets, joint fillers, and sealants where indicated and where required for weatherproof performance of metal roof panel assemblies. Provide types of gaskets, fillers, and sealants indicated or, if not indicated, type recommended by metal roof panel manufacturer.

1. Seal metal roof panel end laps with double beads of tape or sealant, full width of panel. Seal side joints where recommended by metal roof panel manufacturer.
2. Prepare joints and apply sealants to comply with requirements in Division 07 Section "Joint Sealants."

3.6 METAL ROOF PANEL INSTALLATION

A. Standing-Seam Metal Roof Panels: Fasten metal roof panels to supports with concealed clips at each standing-seam joint at location, spacing, and with fasteners recommended by manufacturer.

1. Install clips to supports with self-tapping fasteners.
2. Install pressure plates at locations indicated in manufacturer's written installation instructions.
3. Snap Joint: Nest standing seams and fasten together by interlocking and completely engaging factory-applied sealant.
4. Seamed Joint: Crimp standing seams with manufacturer-approved, motorized seamer tool so clip, metal roof panel, and factory-applied sealant are completely engaged.

3.7 ACCESSORY INSTALLATION

A. General: Install accessories with positive anchorage to building and weathertight mounting and provide for thermal expansion. Coordinate installation with flashings and other components.

NOT FOR BIDDING

1. Install components required for a complete metal roof panel assembly including trim, copings, ridge closures, seam covers, flashings, sealants, gaskets, fillers, closure strips, and similar items.

B. Flashing and Trim: Comply with performance requirements, manufacturer's written installation instructions, and SMACNA's "Architectural Sheet Metal Manual." Provide concealed fasteners where possible, and set units true to line and level as indicated. Install work with laps, joints, and seams that will be permanently watertight and weather resistant.

1. Install exposed flashing and trim that is without excessive oil canning, buckling, and tool marks and that is true to line and levels indicated, with exposed edges folded back to form hems. Install sheet metal flashing and trim to fit substrates and to result in waterproof and weather-resistant performance.
2. Expansion Provisions: Provide for thermal expansion of exposed flashing and trim. Space movement joints at a maximum of 10 feet (3 m) with no joints allowed within 24 inches (600 mm) of corner or intersection. Where lapped expansion provisions cannot be used or would not be sufficiently weather resistant and waterproof, form expansion joints of intermeshing hooked flanges, not less than 1 inch (25 mm) deep, filled with mastic sealant (concealed within joints).

C. Pipe Flashing: Form flashing around pipe penetration and metal roof panels. Fasten and seal to metal roof panels as recommended by manufacturer.

3.8 ERECTION TOLERANCES

A. Installation Tolerances: Shim and align metal roof panel units within installed tolerance of 1/4 inch in 20 feet (6 mm in 6 m) on slope and location lines as indicated and within 1/8-inch (3-mm) offset of adjoining faces and of alignment of matching profiles.

3.9 FIELD QUALITY CONTROL

A. Manufacturer's Field Service: Engage a factory-authorized service representative to inspect metal roof panel installation including accessories. Report results in writing.

B. Remove and replace applications of metal roof panels where inspections indicate that they do not comply with specified requirements.

C. Additional inspections, at Contractor's expense, will be performed to determine compliance of replaced or additional work with specified requirements.

3.10 CLEANING

A. Remove temporary protective coverings and strippable films, if any, as metal roof panels are installed unless otherwise indicated in manufacturer's written installation instructions. On completion of metal roof panel installation, clean finished surfaces as recommended by metal roof panel manufacturer. Maintain in a clean condition during construction.

NOT FOR BIDDING

B. Replace metal roof panels that have been damaged or have deteriorated beyond successful repair by finish touchup or similar minor repair procedures.

END OF SECTION 074113

NOT FOR BIDDING

(PAGE LEFT BLANK)

NOT FOR BIDDING

SECTION 074646 - FIBER-CEMENT SIDING

PART 1 - GENERAL

1.1 RELATED DOCUMENTS

A. Drawings and general provisions of the Contract, including General and Supplementary Conditions and Division 01 Specification Sections, apply to this Section.

1.2 SUMMARY

A. Section includes fiber-cement siding, soffit, trim and brackets.

B. Related Requirements:

1. Section 061000 "Rough Carpentry" for wood furring, grounds, nailers, and blocking.
2. Section 072500 "Weather Barriers" for weather-resistive barriers.
3. Section 099113 "Exterior Painting" for exterior finishes.

1.3 COORDINATION

A. Coordinate siding installation with flashings and other adjoining construction to ensure proper sequencing.

1.4 PREINSTALLATION MEETINGS

A. Preinstallation Conference: Conduct conference at Project site.

1.5 ACTION SUBMITTALS

A. Product Data: For each type of product. Include construction details, material descriptions, dimensions of individual components and profiles, and finishes.

B. Samples for Initial Selection: For fiber-cement siding, panels, soffit and trim including related accessories.

C. Samples for Verification: For each type, color, texture, and pattern required.

1. 12-inch- (300-mm-) long-by-actual-width Sample of siding.
2. 24-inch- (600-mm-) wide-by-36-inch- (900-mm-) high Sample panel of siding assembled on plywood backing.
3. 12-inch- (300-mm-) long-by-actual-width Sample of soffit.
4. 12-inch- (300-mm-) long-by-actual-width Samples of trim and accessories.

NOT FOR BIDDING

1.6 INFORMATIONAL SUBMITTALS

A. Product Certificates: For each type of fiber-cement siding, panels, soffit and trim.

B. Product Test Reports: Based on evaluation of comprehensive tests performed by a qualified testing agency, for fiber-cement siding.

C. Research/Evaluation Reports: For each type of fiber-cement siding required, from ICC-ES.

D. Sample Warranty: For special warranty.

1.7 CLOSEOUT SUBMITTALS

A. Maintenance Data: For each type of product, including related accessories, to include in maintenance manuals.

1.8 MAINTENANCE MATERIAL SUBMITTALS

A. Furnish extra materials that match products installed and that are packaged with protective covering for storage and identified with labels describing contents.

1. Furnish full lengths of fiber-cement siding, panels, soffit and trim including related accessories, in a quantity equal to 2 percent of amount installed.

1.9 DELIVERY, STORAGE, AND HANDLING

A. Deliver and store packaged materials in original containers with labels intact until time of use.

B. Store materials on elevated platforms, under cover, and in a dry location.

1.10 WARRANTY

A. Special Warranty: Manufacturer agrees to repair or replace products that fail in materials or workmanship within specified warranty period.

1. Failures include, but are not limited to, the following:

a. Structural failures including cracking and deforming.
b. Deterioration of materials beyond normal weathering.

2. Warranty Period: 30 years from date of Substantial Completion.

NOT FOR BIDDING

PART 2 - PRODUCTS

2.1 MANUFACTURERS

A. Source Limitations: Obtain products, including related accessories, from single source from single manufacturer.

2.2 FIBER-CEMENT SIDING FCS1

A. General: ASTM C 1186, Type A, Grade II, fiber-cement board, noncombustible when tested according to ASTM E 136; with a flame-spread index of 25 or less when tested according to ASTM E 84.

1. Manufacturers: Basis-of-Design Product: Subject to compliance with requirements, provide James Hardie, Hardie-Plank lap siding, Select Cedarmill pattern, primed for field painting, or comparable product by one of the following:

a. CertainTeed Corporation.
b. GAF Materials Corporation.
c. MaxiTile, Inc.
d. Nichiha Fiber Cement.
e. Norandex Building Materials Distribution, Inc.

B. Labeling: Provide fiber-cement siding that is tested and labeled according to ASTM C 1186 by a qualified testing agency acceptable to authorities having jurisdiction.

C. Nominal Thickness: Not less than 5/16 inch (8 mm).

D. Horizontal Pattern: Boards 6 1/4 to 6 1/2 inches (159 to 165 mm) wide in plain style, match existing siding exposure.

1. Texture: Wood grain.

E. Panel Texture: 48-inch- (1220-mm-) wide sheets with smooth texture.

F. Factory Priming: Manufacturer's standard acrylic primer.

2.3 FIBER-CEMENT SIDING FCS2

A. General: ASTM C 1186, Type A, Grade II, fiber-cement board, noncombustible when tested according to ASTM E 136; with a flame-spread index of 25 or less when tested according to ASTM E 84.

1. Manufacturers: Basis-of-Design Product: Subject to compliance with requirements, provide James Hardie, Hardie-Shingleside staggered edge panel siding, Select Cedarmill pattern, primed for field painting, or comparable product by one of the following:

a. CertainTeed Corporation.
b. GAF Materials Corporation.

NOT FOR BIDDING

c. MaxiTile, Inc.
d. Nichiha Fiber Cement.
e. Norandex Building Materials Distribution, Inc.

B. Labeling: Provide fiber-cement siding that is tested and labeled according to ASTM C 1186 by a qualified testing agency acceptable to authorities having jurisdiction.

C. Nominal Thickness: Not less than 5/16 inch (8 mm).

D. Shingle Pattern: 48-inch- (1200-mm-) wide, staggered-edge notched sheets with wood-grain texture.

E. Panel Texture: 48-inch- (1200-mm-) wide sheets with smooth texture.

F. Factory Priming: Manufacturer's standard acrylic primer.

2.4 FIBER-CEMENT SOFFIT

A. General: ASTM C 1186, Type A, Grade II, fiber-cement board, noncombustible when tested according to ASTM E 136; with a flame-spread index of 25 or less when tested according to ASTM E 84.

1. Manufacturers: Basis-of-Design Product: Subject to compliance with requirements, provide James Hardie, Hardie-Soffit vented soffit panels, smooth pattern, primed for field painting, or comparable product by one of the following:

a. CertainTeed Corporation.
b. James Hardie Building Products, Inc.
c. MaxiTile, Inc.
d. Nichiha Fiber Cement.
e. Norandex Building Materials Distribution, Inc.

B. Nominal Thickness: Not less than 5/16 inch (8 mm).

C. Pattern: 24-inch- (600-mm-) wide sheets with smooth texture.

D. Ventilation: Provide perforated soffit unless otherwise indicated.

E. Factory Priming: Manufacturer's standard acrylic primer.

2.5 ACCESSORIES

A. Siding Accessories, General: Provide starter strips, edge trim, outside and inside corner caps, and other items as recommended by siding manufacturer for building configuration.

1. Provide accessories matching color and texture of adjacent siding unless otherwise indicated.

B. Decorative Accessories: Provide the following fiber-cement decorative accessories as indicated:

NOT FOR BIDDING

1. Corner posts.
2. Door and window casings.
3. Fasciae.
4. Moldings and trim.

C. Flashing: Provide aluminum flashing complying with Section 076200 "Sheet Metal Flashing and Trim" at window and door heads and where indicated.

1. Finish for Aluminum Flashing: Siliconized polyester coating.

D. Fasteners:

1. For fastening to wood, use siding nails of sufficient length to penetrate a minimum of 1 inch (25 mm) into substrate.
2. For fastening to metal, use ribbed bugle-head screws of sufficient length to penetrate a minimum of 1/4 inch (6 mm), or three screw-threads, into substrate.
3. For fastening fiber cement, use hot-dip galvanized fasteners.

E. Continuous Soffit Vents: Aluminum, hat-channel shape, with perforations; 2 inches (51 mm) wide and not less than 96 inches (2438 mm) long.

1. Net-Free Area: 4 sq. in./linear ft. (280 sq. cm/m).
2. Finish: White paint.

PART 3 - EXECUTION

3.1 EXAMINATION

A. Examine substrates for compliance with requirements for installation tolerances and other conditions affecting performance of fiber-cement siding, panels, soffit and trim and related accessories.

B. Proceed with installation only after unsatisfactory conditions have been corrected.

3.2 PREPARATION

A. Clean substrates of projections and substances detrimental to application.

3.3 INSTALLATION

A. General: Comply with manufacturer's written installation instructions applicable to products and applications indicated unless more stringent requirements apply.

1. Do not install damaged components.
2. Install fasteners no more than 24 inches (600 mm) o.c.

B. Install joint sealants as specified in Section 079200 "Joint Sealants" and to produce a weathertight installation.

NOT FOR BIDDING

3.4 ADJUSTING AND CLEANING

A. Remove damaged, improperly installed, or otherwise defective materials and replace with new materials complying with specified requirements.

B. Clean finished surfaces according to manufacturer's written instructions and maintain in a clean condition during construction.

END OF SECTION 074646

NOT FOR BIDDING

SECTION 075323 - ETHYLENE-PROPYLENE-DIENE-MONOMER (EPDM) ROOFING

PART 1 - GENERAL

1.1 RELATED DOCUMENTS

A. Drawings and general provisions of the Contract, including General and Supplementary Conditions and Division 01 Specification Sections, apply to this Section.

1.2 SUMMARY

A. Section Includes:

1. Adhered EPDM membrane roofing system.
2. Vapor retarder.
3. Roof insulation.

B. Related Sections:

1. Division 06 Section "Rough Carpentry" for wood nailers, curbs, and blocking; and for wood-based, structural-use roof deck panels.
2. Division 07 Section "Sheet Metal Flashing and Trim" for metal roof penetration flashings, flashings, and counterflashings.
3. Division 07 Section "Joint Sealants" for joint sealants, joint fillers, and joint preparation.
4. Division 07 Section "Thermal Insulation" for building insulation.

1.3 DEFINITIONS

A. Roofing Terminology: See ASTM D 1079 and glossary of NRCA's "The NRCA Roofing and Waterproofing Manual" for definitions of terms related to roofing work in this Section.

1.4 PERFORMANCE REQUIREMENTS

A. General Performance: Installed membrane roofing and base flashings shall withstand specified uplift pressure, thermally induced movement, and exposure to weather without failure due to defective manufacture, fabrication, installation, or other defects in construction. Membrane roofing and base flashings shall remain watertight.

B. Material Compatibility: Provide roofing materials that are compatible with one another under conditions of service and application required, as demonstrated by membrane roofing manufacturer based on testing and field experience.

C. Roofing System Design: Provide membrane roofing system that is identical to systems that have been successfully tested by a qualified testing and inspecting agency to resist uplift pressure calculated according to ASCE/SEI 7.

NOT FOR BIDDING

D. Roofing System Design: Tested by a qualified testing agency to resist the following uplift pressures per UL Class 90.

1.5 ACTION SUBMITTALS

A. Product Data: For each type of product indicated.

B. Shop Drawings: For roofing system. Include plans, elevations, sections, details, and attachments to other work.

1. Base flashings and membrane terminations.
2. Tapered insulation, including slopes.
3. Roof plan showing orientation of steel roof deck and orientation of membrane roofing and fastening spacings and patterns for mechanically fastened membrane roofing.
4. Insulation fastening patterns for corner, perimeter, and field-of-roof locations.

C. Samples for Verification: For the following products, in manufacturer's standard sizes:

1. Sheet roofing, of color specified, including T-shaped side and end lap seam.
2. Roof insulation.
3. 10 lb (4.5 kg) of aggregate ballast in gradation and color indicated.
4. Termination bars.
5. Battens.
6. Six insulation fasteners of each type, length, and finish.
7. Six roof cover fasteners of each type, length, and finish.

1.6 INFORMATIONAL SUBMITTALS

A. Qualification Data: For qualified Installer and manufacturer.

B. Manufacturer Certificate: Signed by roofing manufacturer certifying that membrane roofing system complies with requirements specified in "Performance Requirements" Article.

1. Submit evidence of complying with performance requirements.

C. Product Test Reports: Based on evaluation of comprehensive tests performed by manufacturer and witnessed by a qualified testing agency, for components of membrane roofing system.

D. Research/Evaluation Reports: For components of membrane roofing system, from the ICC-ES.

E. Field quality-control reports.

F. Warranties: Sample of special warranties.

1.7 CLOSEOUT SUBMITTALS

A. Maintenance Data: For membrane roofing system to include in maintenance manuals.

NOT FOR BIDDING

1.8 QUALITY ASSURANCE

A. Manufacturer Qualifications: A qualified manufacturer that is UL listed for membrane roofing system identical to that used for this Project.

B. Installer Qualifications: A qualified firm that is approved, authorized, or licensed by membrane roofing system manufacturer to install manufacturer's product and that is eligible to receive manufacturer's special warranty.

C. Source Limitations: Obtain components including roof insulation and fasteners for membrane roofing system from same manufacturer as membrane roofing.

D. Exterior Fire-Test Exposure: ASTM E 108, Class A; for application and roof slopes indicated, as determined by testing identical membrane roofing materials by a qualified testing agency. Materials shall be identified with appropriate markings of applicable testing agency.

E. Fire-Resistance Ratings: Where indicated, provide fire-resistance-rated roof assemblies identical to those of assemblies tested for fire resistance per ASTM E 119 by a qualified testing agency. Identify products with appropriate markings of applicable testing agency.

F. Preliminary Roofing Conference: Before starting roof deck construction, conduct conference at Project site.

1. Meet with Owner, Architect, Owner's insurer if applicable, testing and inspecting agency representative, roofing Installer, roofing system manufacturer's representative, deck Installer, and installers whose work interfaces with or affects roofing, including installers of roof accessories and roof-mounted equipment.
2. Review methods and procedures related to roofing installation, including manufacturer's written instructions.
3. Review and finalize construction schedule and verify availability of materials, Installer's personnel, equipment, and facilities needed to make progress and avoid delays.
4. Review requirements for deck substrate conditions and finishes, including flatness and fastening.
5. Review structural loading limitations of roof deck during and after roofing.
6. Review base flashings, special roofing details, roof drainage, roof penetrations, equipment curbs, and condition of other construction that will affect roofing system.
7. Review governing regulations and requirements for insurance and certificates if applicable.
8. Review temporary protection requirements for roofing system during and after installation.
9. Review roof observation and repair procedures after roofing installation.

G. Preinstallation Roofing Conference: Conduct conference at Project site.

1. Meet with Owner, Architect, Owner's insurer if applicable, testing and inspecting agency representative, roofing Installer, roofing system manufacturer's representative, deck Installer, and installers whose work interfaces with or affects roofing, including installers of roof accessories and roof-mounted equipment.
2. Review methods and procedures related to roofing installation, including manufacturer's written instructions.

NOT FOR BIDDING

3. Review and finalize construction schedule and verify availability of materials, Installer's personnel, equipment, and facilities needed to make progress and avoid delays.
4. Examine deck substrate conditions and finishes for compliance with requirements, including flatness and fastening.
5. Review structural loading limitations of roof deck during and after roofing.
6. Review base flashings, special roofing details, roof drainage, roof penetrations, equipment curbs, and condition of other construction that will affect roofing system.
7. Review governing regulations and requirements for insurance and certificates if applicable.
8. Review temporary protection requirements for roofing system during and after installation.
9. Review roof observation and repair procedures after roofing installation.

1.9 DELIVERY, STORAGE, AND HANDLING

A. Deliver roofing materials to Project site in original containers with seals unbroken and labeled with manufacturer's name, product brand name and type, date of manufacture, approval or listing agency markings, and directions for storing and mixing with other components.

B. Store liquid materials in their original undamaged containers in a clean, dry, protected location and within the temperature range required by roofing system manufacturer. Protect stored liquid material from direct sunlight.

1. Discard and legally dispose of liquid material that cannot be applied within its stated shelf life.

C. Protect roof insulation materials from physical damage and from deterioration by sunlight, moisture, soiling, and other sources. Store in a dry location. Comply with insulation manufacturer's written instructions for handling, storing, and protecting during installation.

D. Handle and store roofing materials and place equipment in a manner to avoid permanent deflection of deck.

1.10 PROJECT CONDITIONS

A. Weather Limitations: Proceed with installation only when existing and forecasted weather conditions permit roofing system to be installed according to manufacturer's written instructions and warranty requirements.

1.11 WARRANTY

A. Special Warranty: Manufacturer's standard or customized form, without monetary limitation, in which manufacturer agrees to repair or replace components of membrane roofing system that fail in materials or workmanship within specified warranty period.

1. Special warranty includes membrane roofing, base flashings, roof insulation, fasteners, cover boards, substrate board, roofing accessories, and other components of membrane roofing system.

NOT FOR BIDDING

2. Warranty Period: 20 years from date of Substantial Completion.

B. Special Project Warranty: Submit roofing Installer's warranty, on warranty form at end of this Section, signed by Installer, covering Work of this Section, including all components of membrane roofing system such as membrane roofing, base flashing, roof insulation, fasteners, cover boards, substrate boards, vapor retarders, roof pavers, and walkway products, for the following warranty period:

1. Warranty Period: Two years from date of Substantial Completion.

PART 2 - PRODUCTS

2.1 EPDM MEMBRANE ROOFING

A. EPDM: ASTM D 4637, Type II, scrim or fabric internally reinforced, uniform, flexible EPDM sheet.

1. Manufacturers: Subject to compliance with requirements, available manufacturers offering products that may be incorporated into the Work include, but are not limited to, the following:

a. Carlisle SynTec Incorporated.
b. ERSystems.
c. Firestone Building Products.
d. GAF Materials Corporation.
e. GenFlex Roofing Systems.
f. International Diamond Systems.
g. Johns Manville.
h. Mule-Hide Products Co., Inc.
i. Protective Coatings, Inc.
j. Roofing Products International, Inc.
k. StaFast Building Products.
l. Versico Incorporated.

2. Thickness: 60 mils (1.5 mm), nominal.
3. Exposed Face Color: White on black.

2.2 AUXILIARY MEMBRANE ROOFING MATERIALS

A. General: Auxiliary membrane roofing materials recommended by roofing system manufacturer for intended use and compatible with membrane roofing.

1. Liquid-type auxiliary materials shall comply with VOC limits of authorities having jurisdiction.
2. Adhesives and sealants that are not on the exterior side of weather barrier shall comply with the following limits for VOC content when calculated according to 40 CFR 59, Subpart D (EPA Method 24):

NOT FOR BIDDING

a. Plastic Foam Adhesives: 50 g/L.
b. Gypsum Board and Panel Adhesives: 50 g/L.
c. Multipurpose Construction Adhesives: 70 g/L.
d. Fiberglass Adhesives: 80 g/L.
e. Single-Ply Roof Membrane Adhesives: 250 g/L.
f. Single-Ply Roof Membrane Sealants: 450 g/L.
g. Nonmembrane Roof Sealants: 300 g/L.
h. Sealant Primers for Nonporous Substrates: 250 g/L.
i. Sealant Primers for Porous Substrates: 775 g/L.
j. Other Adhesives and Sealants: 250 g/L.

3. Adhesives and sealants that are not on the exterior side of weather barrier shall comply with the testing and product requirements of the California Department of Health Services' "Standard Practice for the Testing of Volatile Organic Emissions from Various Sources Using Small-Scale Environmental Chambers."

B. Sheet Flashing: 60-mil- (1.5-mm-) thick EPDM, partially cured or cured, according to application.

C. Protection Sheet: Epichlorohydrin or neoprene non-reinforced flexible sheet, 55- to 60-mil- (1.4- to 1.5-mm-) thick, recommended by EPDM manufacturer for resistance to hydrocarbons, non-aromatic solvents, grease, and oil.

D. Bonding Adhesive: Manufacturer's standard.

E. Seaming Material: Manufacturer's standard, synthetic-rubber polymer primer and 3-inch- (75-mm-) wide minimum, butyl splice tape with release film.

F. Lap Sealant: Manufacturer's standard, single-component sealant, colored to match membrane roofing.

G. Water Cutoff Mastic: Manufacturer's standard butyl mastic sealant.

H. Metal Termination Bars: Manufacturer's standard, predrilled stainless-steel or aluminum bars, approximately 1 by 1/8 inch (25 by 3 mm) thick; with anchors.

I. Metal Battens: Manufacturer's standard, aluminum-zinc-alloy-coated or zinc-coated steel sheet, approximately 1 inch wide by 0.05 inch thick (25 mm wide by 1.3 mm thick), prepunched.

J. Fasteners: Factory-coated steel fasteners and metal or plastic plates complying with corrosion-resistance provisions in FM Approvals 4470, designed for fastening membrane to substrate, and acceptable to roofing system manufacturer.

K. Miscellaneous Accessories: Provide pourable sealers, preformed cone and vent sheet flashings, molded pipe boot flashings, preformed inside and outside corner sheet flashings, reinforced EPDM securement strips, T-joint covers, in-seam sealants, termination reglets, cover strips, and other accessories.

L. Liquid coating, specifically formulated for coating EPDM membrane roofing, as follows:

1. Type: Acrylic emulsion.

NOT FOR BIDDING

2. Color: As selected by Architect from manufacturer's full range.

2.3 SUBSTRATE BOARDS

A. Substrate Board: ASTM C 728, perlite board, 3/4 inch (19 mm) thick, seal coated.

B. Fasteners: Factory-coated steel fasteners and metal or plastic plates complying with corrosion-resistance provisions in FM Approvals 4470, designed for fastening substrate panel to roof deck.

2.4 VAPOR RETARDER

A. Polyethylene Film: ASTM D 4397, 6 mils (0.15 mm) thick, minimum, with maximum permeance rating of 0.13 perm (7.5 ng/Pa x s x sq. m).

1. Tape: Pressure-sensitive tape of type recommended by vapor-retarder manufacturer for sealing joints and penetrations in vapor retarder.
2. Adhesive: Manufacturer's standard lap adhesive, FM Approvals approved for vapor-retarder application.

B. Laminated Sheet: Kraft paper, two layers, laminated with asphalt and edge reinforced with woven fiberglass yarn with maximum permeance rating of 0.50 perm (29 ng/Pa x s x sq. m) and with manufacturer's standard adhesive.

C. Glass-Fiber Felts: ASTM D 2178, Type IV, asphalt impregnated.

2.5 ROOF INSULATION

A. General: Preformed roof insulation boards manufactured or approved by EPDM membrane roofing manufacturer, selected from manufacturer's standard sizes suitable for application, of thicknesses indicated and that produce FM Approvals-approved roof insulation.

B. Polyisocyanurate Board Insulation: ASTM C 1289, Type II, Class 1, Grade 2, felt or glass-fiber mat facer on both major surfaces.

C. Tapered Insulation: Provide factory-tapered insulation boards fabricated to slope of 1/4 inch per 12 inches (1:48) unless otherwise indicated.

D. Provide preformed saddles, crickets, tapered edge strips, and other insulation shapes where indicated for sloping to drain. Fabricate to slopes indicated.

2.6 INSULATION ACCESSORIES

A. General: Furnish roof insulation accessories recommended by insulation manufacturer for intended use and compatibility with membrane roofing.

NOT FOR BIDDING

B. Fasteners: Factory-coated steel fasteners and metal or plastic plates complying with corrosion-resistance provisions in FM Approvals 4470, designed for fastening roof insulation and cover boards to substrate, and acceptable to roofing system manufacturer.

C. Modified Asphaltic Insulation Adhesive: Insulation manufacturer's recommended modified asphalt, asbestos-free, cold-applied adhesive formulated to attach roof insulation to substrate or to another insulation layer.

D. Bead-Applied Insulation Adhesive: Insulation manufacturer's recommended bead-applied, low-rise, one- or multicomponent urethane adhesive formulated to attach roof insulation to substrate or to another insulation layer.

E. Full-Spread Applied Insulation Adhesive: Insulation manufacturer's recommended spray-applied, low-rise, two-component urethane adhesive formulated to attach roof insulation to substrate or to another insulation layer.

F. Protection Mat: Woven or nonwoven polypropylene, polyolefin, or polyester fabric, water permeable and resistant to UV degradation, type and weight as recommended by roofing system manufacturer for application.

2.7 WALKWAYS

A. Flexible Walkways: Factory-formed, nonporous, heavy-duty, solid-rubber, slip-resisting, surface-textured walkway pads or rolls, approximately 3/16 inch (5 mm) thick and acceptable to roofing system manufacturer.

PART 3 - EXECUTION

3.1 EXAMINATION

A. Examine substrates, areas, and conditions, with Installer present, for compliance with the following requirements and other conditions affecting performance of roofing system:

1. Verify that roof openings and penetrations are in place and curbs are set and braced and that roof drain bodies are securely clamped in place.
2. Verify that wood blocking, curbs, and nailers are securely anchored to roof deck at penetrations and terminations and that nailers match thicknesses of insulation.
3. Verify that surface plane flatness and fastening of steel roof deck complies with requirements in Division 05 Section "Steel Decking."
4. Verify that minimum concrete drying period recommended by roofing system manufacturer has passed.
5. Verify that concrete substrate is visibly dry and free of moisture. Test for capillary moisture by plastic sheet method according to ASTM D 4263.
6. Verify that concrete curing compounds that will impair adhesion of roofing components to roof deck have been removed.

B. Proceed with installation only after unsatisfactory conditions have been corrected.

NOT FOR BIDDING

3.2 PREPARATION

A. Clean substrate of dust, debris, moisture, and other substances detrimental to roofing installation according to roofing system manufacturer's written instructions. Remove sharp projections.

B. Prevent materials from entering and clogging roof drains and conductors and from spilling or migrating onto surfaces of other construction. Remove roof-drain plugs when no work is taking place or when rain is forecast.

C. Complete terminations and base flashings and provide temporary seals to prevent water from entering completed sections of roofing system at the end of the workday or when rain is forecast. Remove and discard temporary seals before beginning work on adjoining roofing.

D. Install acoustical roof deck rib insulation strips, specified in Division 05 Section "Steel Decking," according to acoustical roof deck manufacturer's written instructions, immediately before installation of overlying construction and to remain dry.

3.3 SUBSTRATE BOARD

A. Install substrate board with long joints in continuous straight lines, perpendicular to roof slopes with end joints staggered between rows. Tightly butt substrate boards together.

1. Fasten substrate board to top flanges of steel deck according to recommendations in FM Approvals' "RoofNav" and FM Global Loss Prevention Data Sheet 1-29 for specified Windstorm Resistance Classification.
2. Fasten substrate board to top flanges of steel deck to resist uplift pressure at corners, perimeter, and field of roof according to membrane roofing system manufacturers' written instructions.

3.4 INSULATION INSTALLATION

A. Coordinate installing membrane roofing system components so insulation is not exposed to precipitation or left exposed at the end of the workday.

B. Comply with membrane roofing system and insulation manufacturer's written instructions for installing roof insulation.

C. Install tapered insulation under area of roofing to conform to slopes indicated.

D. Install insulation under area of roofing to achieve required thickness. Where overall insulation thickness is 2.7 inches (68 mm) or greater, install two or more layers with joints of each succeeding layer staggered from joints of previous layer a minimum of 6 inches (150 mm) in each direction.

1. Where installing composite and noncomposite insulation in two or more layers, install noncomposite board insulation for bottom layer and intermediate layers, if applicable, and install composite board insulation for top layer.

E. Trim surface of insulation where necessary at roof drains so completed surface is flush and does not restrict flow of water.

NOT FOR BIDDING

F. Install insulation with long joints of insulation in a continuous straight line with end joints staggered between rows, abutting edges and ends between boards. Fill gaps exceeding 1/4 inch (6 mm) with insulation.

1. Cut and fit insulation within 1/4 inch (6 mm) of nailers, projections, and penetrations.

G. Adhered Insulation: Install each layer of insulation and adhere to substrate as follows:

1. Prime surface of concrete deck with asphalt primer at rate of 3/4 gal./100 sq. ft. (0.3 L/sq. m) and allow primer to dry.
2. Set each layer of insulation in a solid mopping of hot roofing asphalt, applied within plus or minus 25 deg F (14 deg C) of equiviscous temperature.
3. Set each layer of insulation in ribbons of bead-applied insulation adhesive, firmly pressing and maintaining insulation in place.
4. Set each layer of insulation in a uniform coverage of full-spread insulation adhesive, firmly pressing and maintaining insulation in place.

H. Mechanically Fastened Insulation: Install each layer of insulation and secure to deck using mechanical fasteners specifically designed and sized for fastening specified board-type roof insulation to deck type.

1. Fasten insulation according to requirements in FM Approvals' "RoofNav" for specified Windstorm Resistance Classification.
2. Fasten insulation to resist uplift pressure at corners, perimeter, and field of roof.

3.5 ADHERED MEMBRANE ROOFING INSTALLATION

A. Adhere membrane roofing over areas to receive roofing according to membrane roofing system manufacturer's written instructions. Unroll membrane roofing and allow to relax before installing.

B. Start installation of membrane roofing in presence of membrane roofing system manufacturer's technical personnel.

C. Accurately align membrane roofing and maintain uniform side and end laps of minimum dimensions required by manufacturer. Stagger end laps.

D. Bonding Adhesive: Apply to substrate and underside of membrane roofing at rate required by manufacturer and allow to partially dry before installing membrane roofing. Do not apply to splice area of membrane roofing.

E. Hot Roofing Asphalt: Apply a solid mopping of hot roofing asphalt to substrate at temperature and rate required by manufacturer and install fabric-backed membrane roofing. Do not apply to splice area of membrane roofing.

F. In addition to adhering, mechanically fasten membrane roofing securely at terminations, penetrations, and perimeters.

G. Apply membrane roofing with side laps shingled with slope of roof deck where possible.

NOT FOR BIDDING

H. Adhesive Seam Installation: Clean both faces of splice areas, apply splicing cement, and firmly roll side and end laps of overlapping membrane roofing according to manufacturer's written instructions to ensure a watertight seam installation. Apply lap sealant and seal exposed edges of membrane roofing terminations.

1. Apply a continuous bead of in-seam sealant before closing splice if required by membrane roofing system manufacturer.

I. Tape Seam Installation: Clean and prime both faces of splice areas, apply splice tape, and firmly roll side and end laps of overlapping membrane roofing according to manufacturer's written instructions to ensure a watertight seam installation. Apply lap sealant and seal exposed edges of membrane roofing terminations.

J. Repair tears, voids, and lapped seams in roofing that does not comply with requirements.

K. Spread sealant or mastic bed over deck drain flange at roof drains and securely seal membrane roofing in place with clamping ring.

L. Install membrane roofing and auxiliary materials to tie in to existing membrane roofing to maintain weather-tightness of transition and to not void warranty for existing membrane roofing system.

M. Adhere protection sheet over membrane roofing at locations indicated.

3.6 BASE FLASHING INSTALLATION

A. Install sheet flashings and preformed flashing accessories and adhere to substrates according to membrane roofing system manufacturer's written instructions.

B. Apply bonding adhesive to substrate and underside of sheet flashing at required rate and allow to partially dry. Do not apply to seam area of flashing.

C. Flash penetrations and field-formed inside and outside corners with cured or uncured sheet flashing.

D. Clean splice areas, apply splicing cement, and firmly roll side and end laps of overlapping sheets to ensure a watertight seam installation. Apply lap sealant and seal exposed edges of sheet flashing terminations.

E. Terminate and seal top of sheet flashings and mechanically anchor to substrate through termination bars.

3.7 COATING INSTALLATION

A. Apply coatings to membrane roofing and base flashings according to manufacturer's written recommendations, by spray, roller, or other suitable application method.

NOT FOR BIDDING

3.8 FIELD QUALITY CONTROL

A. Testing Agency: Owner will engage a qualified independent testing agency to perform inspections.

B. Final Roof Inspection: Arrange for roofing system manufacturer's technical personnel to inspect roofing installation on completion.

C. Repair or remove and replace components of membrane roofing system where inspections indicate that they do not comply with specified requirements.

D. Additional inspections, at Contractor's expense, will be performed to determine compliance of replaced or additional work with specified requirements.

3.9 PROTECTING AND CLEANING

A. Protect membrane roofing system from damage and wear during remainder of construction period. When remaining construction will not affect or endanger roofing, inspect roofing for deterioration and damage, describing its nature and extent in a written report, with copies to Architect and Owner.

B. Correct deficiencies in or remove membrane roofing system that does not comply with requirements, repair substrates and repair or reinstall membrane roofing system to a condition free of damage and deterioration at time of Substantial Completion and according to warranty requirements.

C. Clean overspray and spillage from adjacent construction using cleaning agents and procedures recommended by manufacturer of affected construction.

3.10 ROOFING INSTALLER'S WARRANTY

A. WHEREAS <**Insert name**> of <**Insert address**>, herein called the "Roofing Installer," has performed roofing and associated work ("work") on the following project:

1. Owner: <**Insert name of Owner.**>
2. Address: <**Insert address.**>
3. Building Name/Type: <**Insert information.**>
4. Address: <**Insert address.**>
5. Area of work: <**Insert information.**>
6. Acceptance Date: <**Insert date.**>
7. Warranty Period: <**Insert time.**>
8. Expiration Date: <**Insert date.**>

B. AND WHEREAS Roofing Installer has contracted (either directly with Owner or indirectly as a subcontractor) to warrant said work against leaks and faulty or defective materials and workmanship for designated Warranty Period,

C. NOW THEREFORE Roofing Installer hereby warrants, subject to terms and conditions herein set forth, that during Warranty Period he will, at his own cost and expense, make or cause to be

NOT FOR BIDDING

made such repairs to or replacements of said work as are necessary to correct faulty and defective work and as are necessary to maintain said work in a watertight condition.

D. This Warranty is made subject to the following terms and conditions:

1. Specifically excluded from this Warranty are damages to work and other parts of the building, and to building contents, caused by:

   a. Lightning;
   b. Peak gust wind speed exceeding <**Insert wind speed**> mph (m/sec);
   c. Fire;
   d. Failure of roofing system substrate, including cracking, settlement, excessive deflection, deterioration, and decomposition;
   e. Faulty construction of parapet walls, copings, chimneys, skylights, vents, equipment supports, and other edge conditions and penetrations of the work;
   f. Vapor condensation on bottom of roofing; and
   g. Activity on roofing by others, including construction contractors, maintenance personnel, other persons, and animals, whether authorized or unauthorized by Owner.

2. When work has been damaged by any of foregoing causes, Warranty shall be null and void until such damage has been repaired by Roofing Installer and until cost and expense thereof have been paid by Owner or by another responsible party so designated.
3. Roofing Installer is responsible for damage to work covered by this Warranty but is not liable for consequential damages to building or building contents resulting from leaks or faults or defects of work.
4. During Warranty Period, if Owner allows alteration of work by anyone other than Roofing Installer, including cutting, patching, and maintenance in connection with penetrations, attachment of other work, and positioning of anything on roof, this Warranty shall become null and void on date of said alterations, but only to the extent said alterations affect work covered by this Warranty. If Owner engages Roofing Installer to perform said alterations, Warranty shall not become null and void unless Roofing Installer, before starting said work, shall have notified Owner in writing, showing reasonable cause for claim, that said alterations would likely damage or deteriorate work, thereby reasonably justifying a limitation or termination of this Warranty.
5. During Warranty Period, if original use of roof is changed and it becomes used for, but was not originally specified for, a promenade, work deck, spray-cooled surface, flooded basin, or other use or service more severe than originally specified, this Warranty shall become null and void on date of said change, but only to the extent said change affects work covered by this Warranty.
6. Owner shall promptly notify Roofing Installer of observed, known, or suspected leaks, defects, or deterioration and shall afford reasonable opportunity for Roofing Installer to inspect work and to examine evidence of such leaks, defects, or deterioration.
7. This Warranty is recognized to be the only warranty of Roofing Installer on said work and shall not operate to restrict or cut off Owner from other remedies and resources lawfully available to Owner in cases of roofing failure. Specifically, this Warranty shall not operate to relieve Roofing Installer of responsibility for performance of original work according to requirements of the Contract Documents, regardless of whether Contract was a contract directly with Owner or a subcontract with Owner's General Contractor.

NOT FOR BIDDING

E. IN WITNESS THEREOF, this instrument has been duly executed this <**Insert day**> day of <**Insert month**>, <**Insert year**>.

1. Authorized Signature: <**Insert signature**>.
2. Name: <**Insert name**>.
3. Title: <**Insert title**>.

END OF SECTION 075323

NOT FOR BIDDING

SECTION 076200 - SHEET METAL FLASHING AND TRIM

PART 1 - GENERAL

1.1 RELATED DOCUMENTS

A. Drawings and general provisions of the Contract, including General and Supplementary Conditions and Division 01 Specification Sections, apply to this section.

1.2 SUMMARY

A. Section Includes:

1. Manufactured Products:

   a. Manufactured through-wall flashing and counterflashing.

2. Formed Products:

   a. Formed roof drainage sheet metal fabrications.
   b. Formed low-slope roof sheet metal fabrications.
   c. Formed steep-slope roof sheet metal fabrications.
   d. Formed wall sheet metal fabrications.

B. Related Sections:

1. Division 06 Section "Rough Carpentry" for wood nailers, curbs, and blocking.
2. Division 07 Section "Asphalt Shingles" for installing sheet metal flashing and trim integral with roofing.
3. Division 07 Section "Ethylene-Propylene-Diene-Monomer (Epdm) Roofing" for installing sheet metal flashing and trim integral with membrane roofing.
4. Division 07 Section "Metal Roof Panels" for sheet metal flashing and trim integral with metal roof panels.

1.3 PERFORMANCE REQUIREMENTS

A. General: Sheet metal flashing and trim assemblies as indicated shall withstand wind loads, structural movement, thermally induced movement, and exposure to weather without failure due to defective manufacture, fabrication, installation, or other defects in construction. Completed sheet metal flashing and trim shall not rattle, leak, or loosen, and shall remain watertight.

B. Fabricate and install roof edge flashing and copings capable of resisting the following forces according to recommendations in FMG Loss Prevention Data Sheet 1-49:

1. Wind Zone 1: For velocity pressures of 10 to 20 lbf/sq. ft. (0.48 to 0.96 kPa): 40-lbf/sq. ft. (1.92-kPa) perimeter uplift force, 60-lbf/sq. ft. (2.87-kPa) corner uplift force, and 20-lbf/sq. ft. (0.96-kPa) outward force.

NOT FOR BIDDING

2. Wind Zone 1: For velocity pressures of 21 to 30 lbf/sq. ft. (1.00 to 1.44 kPa): 60-lbf/sq. ft. (2.87-kPa) perimeter uplift force, 90-lbf/sq. ft. (4.31-kPa) corner uplift force, and 30-lbf/sq. ft. (1.44-kPa) outward force.
3. Wind Zone 2: For velocity pressures of 31 to 45 lbf/sq. ft. (1.48 to 2.15 kPa): 90-lbf/sq. ft. (4.31-kPa) perimeter uplift force, 120-lbf/sq. ft. (5.74-kPa) corner uplift force, and 45-lbf/sq. ft. (2.15-kPa) outward force.
4. Wind Zone 3: For velocity pressures of 46 to 104 lbf/sq. ft. (2.20 to 4.98 kPa): 208-lbf/sq. ft. (9.96-kPa) perimeter uplift force, 312-lbf/sq. ft. (14.94-kPa) corner uplift force, and 104-lbf/sq. ft. (4.98-kPa) outward force.

C. Thermal Movements: Provide sheet metal flashing and trim that allows for thermal movements from ambient and surface temperature changes.

1. Temperature Change (Range): 120 deg F (67 deg C), ambient; 180 deg F (100 deg C), material surfaces.

1.4 ACTION SUBMITTALS

A. Product Data: For each type of product indicated. Include construction details, material descriptions, dimensions of individual components and profiles, and finishes for each manufactured product and accessory.

B. Shop Drawings: Show fabrication and installation layouts of sheet metal flashing and trim, including plans, elevations, expansion-joint locations, and keyed details. Distinguish between shop- and field-assembled work. Include the following:

1. Identification of material, thickness, weight, and finish for each item and location in Project.
2. Details for forming sheet metal flashing and trim, including profiles, shapes, seams, and dimensions.
3. Details for joining, supporting, and securing sheet metal flashing and trim, including layout of fasteners, cleats, clips, and other attachments. Include pattern of seams.
4. Details of termination points and assemblies, including fixed points.
5. Details of expansion joints and expansion-joint covers, including showing direction of expansion and contraction.
6. Details of edge conditions, including eaves, ridges, valleys, rakes, crickets, and counterflashings as applicable.
7. Details of special conditions.
8. Details of connections to adjoining work.
9. Detail formed flashing and trim at a scale of not less than 1-1/2 inches per 12 inches (1:10).

C. Samples for Initial Selection: For each type of sheet metal flashing, trim, and accessory indicated with factory-applied color finishes involving color selection.

D. Samples for Verification: For each type of exposed finish required, prepared on Samples of size indicated below:

NOT FOR BIDDING

1. Sheet Metal Flashing: 12 inches (300 mm) long by actual width of unit, including finished seam and in required profile. Include fasteners, cleats, clips, closures, and other attachments.
2. Trim, Metal Closures, Expansion Joints, Joint Intersections, and Miscellaneous Fabrications: 12 inches (300 mm) long and in required profile. Include fasteners and other exposed accessories.
3. Accessories and Miscellaneous Materials: Full-size Sample.
4. Anodized Aluminum Samples: Samples to show full range to be expected for each color required.

1.5 INFORMATIONAL SUBMITTALS

A. Qualification Data: For qualified fabricator.

B. Warranty: Sample of special warranty.

1.6 CLOSEOUT SUBMITTALS

A. Maintenance Data: For sheet metal flashing, trim, and accessories to include in maintenance manuals.

1.7 QUALITY ASSURANCE

A. Fabricator Qualifications: Shop that employs skilled workers who custom fabricate sheet metal flashing and trim similar to that required for this Project and whose products have a record of successful in-service performance.

B. Sheet Metal Flashing and Trim Standard: Comply with SMACNA's "Architectural Sheet Metal Manual" unless more stringent requirements are specified or shown on Drawings.

C. Copper Sheet Metal Standard: Comply with CDA's "Copper in Architecture Handbook." Conform to dimensions and profiles shown unless more stringent requirements are indicated.

D. Preinstallation Conference: Conduct conference at Project site.

1. Meet with Owner, Architect, Owner's insurer if applicable, Installer, and installers whose work interfaces with or affects sheet metal flashing and trim including installers of roofing materials, roof accessories, unit skylights, and roof-mounted equipment.
2. Review methods and procedures related to sheet metal flashing and trim.
3. Examine substrate conditions for compliance with requirements, including flatness and attachment to structural members.
4. Review special roof details, roof drainage, roof penetrations, equipment curbs, and condition of other construction that will affect sheet metal flashing.
5. Document proceedings, including corrective measures and actions required, and furnish copy of record to each participant.

NOT FOR BIDDING

1.8 DELIVERY, STORAGE, AND HANDLING

A. Do not store sheet metal flashing and trim materials in contact with other materials that might cause staining, denting, or other surface damage. Store sheet metal flashing and trim materials away from uncured concrete and masonry.

B. Protect strippable protective covering on sheet metal flashing and trim from exposure to sunlight and high humidity, except to the extent necessary for the period of sheet metal flashing and trim installation.

1.9 WARRANTY

A. Special Warranty on Finishes: Manufacturer's standard form in which manufacturer agrees to repair finish or replace sheet metal flashing and trim that shows evidence of deterioration of factory-applied finishes within specified warranty period.

1. Exposed Panel Finish: Deterioration includes, but is not limited to, the following:

a. Color fading more than 5 Hunter units when tested according to ASTM D 2244.
b. Chalking in excess of a No. 8 rating when tested according to ASTM D 4214.
c. Cracking, checking, peeling, or failure of paint to adhere to bare metal.

2. Finish Warranty Period: 20 years from date of Substantial Completion.

PART 2 - PRODUCTS

2.1 SHEET METALS

A. General: Protect mechanical and other finishes on exposed surfaces from damage by applying a strippable, temporary protective film before shipping.

B. Aluminum Sheet: ASTM B 209 (ASTM B 209M), alloy as standard with manufacturer for finish required, with temper as required to suit forming operations and performance required; with **smooth, flat** surface.

1. Clear Anodic Finish, Coil Coated: AAMA 611, AA-M12C22A41, Class I, 0.018 mm or thicker.
2. Concealed Finish: Pretreat with manufacturer's standard white or light-colored acrylic or polyester backer finish, consisting of prime coat and wash coat with minimum total dry film thickness of 0.5 mil (0.013 mm).

2.2 UNDERLAYMENT MATERIALS

A. Self-Adhering, High-Temperature Sheet: Minimum 30 to 40 mils (0.76 to 1.0 mm) thick, consisting of slip-resisting polyethylene-film top surface laminated to layer of butyl or SBS-modified asphalt adhesive, with release-paper backing; cold applied. Provide primer when recommended by underlayment manufacturer.

NOT FOR BIDDING

1. Thermal Stability: ASTM D 1970; stable after testing at 240 deg F (116 deg C).
2. Low-Temperature Flexibility: ASTM D 1970; passes after testing at minus 20 deg F (29 deg C).
3. Products: Subject to compliance with requirements, available products that may be incorporated into the Work include, but are not limited to, the following:

   a. Carlisle Coatings & Waterproofing Inc.; CCW WIP 300 HT.
   b. Grace Construction Products, a unit of W. R. Grace & Co.; Ultra.
   c. Henry Company; Blueskin PE200 HT.
   d. Metal-Fab Manufacturing, LLC; MetShield.
   e. Owens Corning; WeatherLock Metal High Temperature Underlayment.

B. Slip Sheet: Building paper, 3-lb/100 sq. ft. (0.16-kg/sq. m) minimum, rosin sized.

2.3 MISCELLANEOUS MATERIALS

A. General: Provide materials and types of fasteners, solder, welding rods, protective coatings, separators, sealants, and other miscellaneous items as required for complete sheet metal flashing and trim installation and recommended by manufacturer of primary sheet metal or manufactured item unless otherwise indicated.

B. Fasteners: Wood screws, annular threaded nails, self-tapping screws, self-locking rivets and bolts, and other suitable fasteners designed to withstand design loads and recommended by manufacturer of primary sheet metal or manufactured item.

1. General: Blind fasteners or self-drilling screws, gasketed, with hex-washer head.

   a. Exposed Fasteners: Heads matching color of sheet metal using plastic caps or factory-applied coating.
   b. Blind Fasteners: High-strength aluminum or stainless-steel rivets suitable for metal being fastened.
   c. Spikes and Ferrules: Same material as gutter; with spike with ferrule matching internal gutter width.
2. Fasteners for Aluminum Sheet: Aluminum or Series 300 stainless steel.

C. Sealant Tape: Pressure-sensitive, 100 percent solids, gray polyisobutylene compound sealant tape with release paper backing. Provide permanently elastic, nonsag, nontoxic, nonstaining tape 1/2 inch (12 mm) wide and 1/8 inch (3 mm) thick.

D. Elastomeric Sealant: ASTM C 920, elastomeric silicone polymer sealant; low modulus; of type, grade, class, and use classifications required to seal joints in sheet metal flashing and trim and remain watertight.

E. Butyl Sealant: ASTM C 1311, single-component, solvent-release butyl rubber sealant; polyisobutylene plasticized; heavy bodied for hooked-type expansion joints with limited movement.

F. Epoxy Seam Sealer: Two-part, noncorrosive, aluminum seam-cementing compound, recommended by aluminum manufacturer for exterior nonmoving joints, including riveted joints.

NOT FOR BIDDING

G. Bituminous Coating: Cold-applied asphalt emulsion complying with ASTM D 1187.

H. Asphalt Roofing Cement: ASTM D 4586, asbestos free, of consistency required for application.

2.4 FABRICATION, GENERAL

A. General: Custom fabricate sheet metal flashing and trim to comply with recommendations in SMACNA's "Architectural Sheet Metal Manual" that apply to design, dimensions, geometry, metal thickness, and other characteristics of item indicated. Fabricate items at the shop to greatest extent possible.

1. Fabricate sheet metal flashing and trim in thickness or weight needed to comply with performance requirements, but not less than that specified for each application and metal.
2. Obtain field measurements for accurate fit before shop fabrication.
3. Form sheet metal flashing and trim without excessive oil canning, buckling, and tool marks and true to line and levels indicated, with exposed edges folded back to form hems.
4. Conceal fasteners and expansion provisions where possible. Exposed fasteners are not allowed on faces exposed to view.

B. Fabrication Tolerances: Fabricate sheet metal flashing and trim that is capable of installation to tolerances specified in MCA's "Guide Specification for Residential Metal Roofing."

C. Sealed Joints: Form nonexpansion but movable joints in metal to accommodate elastomeric sealant.

D. Expansion Provisions: Where lapped expansion provisions cannot be used, form expansion joints of intermeshing hooked flanges not less than 1 inch (25 mm) deep, filled with butyl sealant concealed within joints.

E. Fabricate cleats and attachment devices from same material as accessory being anchored or from compatible, noncorrosive metal.

F. Fabricate cleats and attachment devices of sizes as recommended by SMACNA's "Architectural Sheet Metal Manual" for application, but not less than thickness of metal being secured.

G. Seams: Fabricate nonmoving seams with flat-lock seams. Tin edges to be seamed, form seams, and solder.

H. Seams: Fabricate nonmoving seams with flat-lock seams. Form seams and seal with elastomeric sealant unless otherwise recommended by sealant manufacturer for intended use. Rivet joints where necessary for strength.

I. Seams for Aluminum: Fabricate nonmoving seams with flat-lock seams. Form seams and seal with manufacturer's seam sealer. Rivet joints where necessary for strength.

J. Do not use graphite pencils to mark metal surfaces.

NOT FOR BIDDING

2.5 LOW-SLOPE ROOF SHEET METAL FABRICATIONS

A. Roof-Edge Flashing (Gravel Stop) and Fascia Cap: Fabricate in minimum 96-inch- (2400-mm-) long, but not exceeding 10-foot- (3-m-) long, sections. Furnish with 6-inch- (150-mm-) wide, joint cover plates.

1. Joint Style: Lap, 4 inches (100 mm) wide.
2. Fabricate with scuppers spaced 10 feet (3 m) apart, of dimensions required with 4-inch- (100-mm-) wide flanges and base extending 4 inches (100 mm) beyond cant or tapered strip into field of roof. Fasten gravel guard angles to base of scupper.
3. Fabricate from the following materials:

   a. Galvanized Steel: 0.028 inch (0.71 mm) thick.
   b. Color: As selected by Architect from manufacturer's full range of colors..

B. Roof and Roof to Wall Transition, Roof to Roof Edge Flashing (Gravel Stop) Transition, Roof to Roof Edge Flashing (Gravel Stop) and Fascia Cap Transition: Fabricate from the following materials:

1. Galvanized Steel: 0.034 inch (0.86 mm) thick.
2. Color: As selected by Architect from manufacturer's full range of colors.

C. Base Flashing: Fabricate from the following materials:

1. Galvanized Steel: 0.028 inch (0.71 mm) thick.
2. Color: As selected by Architect from manufacturer's full range of colors.

D. Counterflashing: Fabricate from the following materials:

1. Galvanized Steel: 0.022 inch (0.56 mm) thick.
2. Color: As selected by Architect from manufacturer's full range of colors.

E. Flashing Receivers: Fabricate from the following materials:

1. Galvanized Steel: 0.022 inch (0.56 mm) thick.
2. Color: As selected by Architect from manufacturer's full range of colors.

2.6 STEEP-SLOPE ROOF SHEET METAL FABRICATIONS

A. Apron, Step, Cricket, and Backer Flashing: Fabricate from the following materials:

1. Galvanized Steel: 0.022 inch (0.56 mm) thick.

B. Valley Flashing: Fabricate from the following materials:

1. Galvanized Steel: 0.028 inch (0.71 mm) thick.

C. Drip Edges: Fabricate from the following materials:

1. Galvanized Steel: 0.022 inch (0.56 mm) thick.
2. Color: As selected by Architect from manufacturer's full range of colors.

NOT FOR BIDDING

D. Eave, Rake, Ridge, and Hip Flashing: Fabricate from the following materials:

1. Galvanized Steel: 0.022 inch (0.56 mm) thick.
2. Color: As selected by Architect from manufacturer's full range of colors.

E. Counterflashing: Fabricate from the following materials:

1. Galvanized Steel: 0.022 inch (0.56 mm) thick.
2. Color: As selected by Architect from manufacturer's full range of colors.

F. Flashing Receivers: Fabricate from the following materials:

1. Galvanized Steel: 0.022 inch (0.56 mm) thick.
2. Color: As selected by Architect from manufacturer's full range of colors.

G. Roof-Penetration Flashing: Fabricate from the following materials:

1. Galvanized Steel: 0.028 inch (0.71 mm) thick.

2.7 WALL SHEET METAL FABRICATIONS

A. Opening Flashings in Frame Construction: Fabricate head, sill, jamb, and similar flashings to extend 4 inches (100 mm) beyond wall openings. Form head and sill flashing with 2-inch- (50-mm-) high, end dams. Fabricate from the following materials:

1. Galvanized Steel: 0.022 inch (0.56 mm) thick.

2.8 MISCELLANEOUS SHEET METAL FABRICATIONS

A. Equipment Support Flashing: Fabricate from the following materials:

1. Galvanized Steel: 0.028 inch (0.71 mm) thick.

PART 3 - EXECUTION

3.1 EXAMINATION

A. Examine substrates, areas, and conditions, with Installer present, to verify actual locations, dimensions and other conditions affecting performance of the Work.

1. Verify compliance with requirements for installation tolerances of substrates.
2. Verify that substrate is sound, dry, smooth, clean, sloped for drainage, and securely anchored.

B. For the record, prepare written report, endorsed by Installer, listing conditions detrimental to performance of the Work.

C. Proceed with installation only after unsatisfactory conditions have been corrected.

NOT FOR BIDDING

3.2 UNDERLAYMENT INSTALLATION

A. General: Install underlayment as indicated on Drawings.

B. Polyethylene Sheet: Install polyethylene sheet with adhesive for anchorage to minimize use of mechanical fasteners under sheet metal flashing and trim. Apply in shingle fashion to shed water, with lapped and taped joints of not less than 2 inches (50 mm).

C. Felt Underlayment: Install felt underlayment with adhesive for temporary anchorage to minimize use of mechanical fasteners under sheet metal flashing and trim. Apply in shingle fashion to shed water, with lapped joints of not less than 2 inches (50 mm).

D. Self-Adhering Sheet Underlayment: Install self-adhering sheet underlayment, wrinkle free. Apply primer if required by underlayment manufacturer. Comply with temperature restrictions of underlayment manufacturer for installation; use primer rather than nails for installing underlayment at low temperatures. Apply in shingle fashion to shed water, with end laps of not less than 6 inches (150 mm) staggered 24 inches (600 mm) between courses. Overlap side edges not less than 3-1/2 inches (90 mm). Roll laps with roller. Cover underlayment within 14 days.

3.3 INSTALLATION, GENERAL

A. General: Anchor sheet metal flashing and trim and other components of the Work securely in place, with provisions for thermal and structural movement. Use fasteners, solder, welding rods, protective coatings, separators, sealants, and other miscellaneous items as required to complete sheet metal flashing and trim system.

1. Install sheet metal flashing and trim true to line and levels indicated. Provide uniform, neat seams with minimum exposure of solder, welds, and sealant.
2. Install sheet metal flashing and trim to fit substrates and to result in watertight performance. Verify shapes and dimensions of surfaces to be covered before fabricating sheet metal.
3. Space cleats not more than 12 inches (300 mm) apart. Anchor each cleat with two fasteners. Bend tabs over fasteners.
4. Install exposed sheet metal flashing and trim without excessive oil canning, buckling, and tool marks.
5. Install sealant tape where indicated.
6. Torch cutting of sheet metal flashing and trim is not permitted.
7. Do not use graphite pencils to mark metal surfaces.

B. Metal Protection: Where dissimilar metals will contact each other or corrosive substrates, protect against galvanic action by painting contact surfaces with bituminous coating or by other permanent separation as recommended by SMACNA.

1. Coat back side of uncoated aluminum sheet metal flashing and trim with bituminous coating where flashing and trim will contact wood, ferrous metal, or cementitious construction.
2. Underlayment: Where installing metal flashing directly on cementitious or wood substrates, install a course of felt underlayment and cover with a slip sheet or install a course of polyethylene sheet.

NOT FOR BIDDING

C. Expansion Provisions: Provide for thermal expansion of exposed flashing and trim. Space movement joints at a maximum of 10 feet (3 m) with no joints allowed within 24 inches (600 mm) of corner or intersection. Where lapped expansion provisions cannot be used or would not be sufficiently watertight, form expansion joints of intermeshing hooked flanges, not less than 1 inch (25 mm) deep, filled with sealant concealed within joints.

D. Fastener Sizes: Use fasteners of sizes that will penetrate wood sheathing not less than 1-1/4 inches (32 mm) for nails and not less than 3/4 inch (19 mm) for wood screws.

E. Seal joints as shown and as required for watertight construction.

1. Where sealant-filled joints are used, embed hooked flanges of joint members not less than 1 inch (25 mm) into sealant. Form joints to completely conceal sealant. When ambient temperature at time of installation is moderate, between 40 and 70 deg F (4 and 21 deg C), set joint members for 50 percent movement each way. Adjust setting proportionately for installation at higher ambient temperatures. Do not install sealant-type joints at temperatures below 40 deg F (4 deg C).
2. Prepare joints and apply sealants to comply with requirements in Division 07 Section "Joint Sealants."

F. Soldered Joints: Clean surfaces to be soldered, removing oils and foreign matter. Pre-tin edges of sheets to be soldered to a width of 1-1/2 inches (38 mm), except reduce pre-tinning where pre-tinned surface would show in completed Work.

1. Do not solder metallic-coated steel and aluminum sheet.
2. Do not use torches for soldering. Heat surfaces to receive solder and flow solder into joint. Fill joint completely. Completely remove flux and spatter from exposed surfaces.
3. Stainless-Steel Soldering: Tin edges of uncoated sheets using solder recommended for stainless steel and acid flux. Promptly remove acid flux residue from metal after tinning and soldering. Comply with solder manufacturer's recommended methods for cleaning and neutralization.
4. Copper Soldering: Tin edges of uncoated copper sheets using solder for copper.

G. Rivets: Rivet joints in uncoated aluminum where indicated and where necessary for strength.

3.4 ROOF FLASHING INSTALLATION

A. General: Install sheet metal flashing and trim to comply with performance requirements, sheet metal manufacturer's written installation instructions, and SMACNA's "Architectural Sheet Metal Manual." Provide concealed fasteners where possible, set units true to line, and level as indicated. Install work with laps, joints, and seams that will be permanently watertight and weather resistant.

B. Roof Edge Flashing: Anchor to resist uplift and outward forces according to recommendations in SMACNA's "Architectural Sheet Metal Manual" and as indicated. Interlock bottom edge of roof edge flashing with continuous cleat anchored to substrate at staggered 3-inch (75-mm) centers.

NOT FOR BIDDING

C. Pipe or Post Counterflashing: Install counterflashing umbrella with close-fitting collar with top edge flared for elastomeric sealant, extending a minimum of 4 inches (100 mm) over base flashing. Install stainless-steel draw band and tighten.

D. Counterflashing: Coordinate installation of counterflashing with installation of base flashing. Insert counterflashing in reglets or receivers and fit tightly to base flashing. Extend counterflashing 4 inches (100 mm) over base flashing. Lap counterflashing joints a minimum of 4 inches (100 mm) and bed with sealant. Secure in a waterproof manner by means of interlocking folded seam or blind rivets and sealant.

E. Roof-Penetration Flashing: Coordinate installation of roof-penetration flashing with installation of roofing and other items penetrating roof. Seal with elastomeric sealant and clamp flashing to pipes that penetrate roof.

3.5 WALL FLASHING INSTALLATION

A. General: Install sheet metal wall flashing to intercept and exclude penetrating moisture according to SMACNA recommendations and as indicated. Coordinate installation of wall flashing with installation of wall-opening components such as windows, doors, and louvers.

B. Opening Flashings in Frame Construction: Install continuous head, sill, jamb, and similar flashings to extend 4 inches (100 mm) beyond wall openings.

3.6 MISCELLANEOUS FLASHING INSTALLATION

A. Overhead-Piping Safety Pans: Suspend pans independent from structure above as indicated on Drawings. Pipe and install drain lines to plumbing waste or drainage system.

B. Equipment Support Flashing: Coordinate installation of equipment support flashing with installation of roofing and equipment. Weld or seal flashing with elastomeric sealant to equipment support member.

3.7 ERECTION TOLERANCES

A. Installation Tolerances: Shim and align sheet metal flashing and trim within installed tolerance of 1/4 inch in 20 feet (6 mm in 6 m) on slope and location lines as indicated and within 1/8-inch (3-mm) offset of adjoining faces and of alignment of matching profiles.

B. Installation Tolerances: Shim and align sheet metal flashing and trim within installed tolerances specified in SMCA's "Guide Specification for Residential Metal Roofing."

3.8 CLEANING AND PROTECTION

A. Clean exposed metal surfaces of substances that interfere with uniform oxidation and weathering.

B. Clean and neutralize flux materials. Clean off excess solder.

NOT FOR BIDDING

C. Clean off excess sealants.

D. Remove temporary protective coverings and strippable films as sheet metal flashing and trim are installed unless otherwise indicated in manufacturer's written installation instructions. On completion of installation, remove unused materials and clean finished surfaces. Maintain in a clean condition during construction.

E. Replace sheet metal flashing and trim that have been damaged or that have deteriorated beyond successful repair by finish touchup or similar minor repair procedures.

END OF SECTION 076200

NOT FOR BIDDING

SECTION 077200 - ROOF ACCESSORIES

PART 1 - GENERAL

1.1 RELATED DOCUMENTS

A. Drawings and general provisions of the Contract, including General and Supplementary Conditions and Division 01 Specification Sections, apply to this Section.

1.2 SUMMARY

A. Section Includes:

1. Roof curbs.
2. Equipment supports.
3. Roof hatches.
4. Pipe and duct supports.
5. Pipe portals.
6. Preformed flashing sleeves.

B. Related Sections:

1. Section 055000 "Metal Fabrications" for metal vertical ladders, ships' ladders, and stairs for access to roof hatches.
2. Section 076200 "Sheet Metal Flashing and Trim" for shop- and field-formed metal flashing, roof-drainage systems, roof expansion-joint covers, and miscellaneous sheet metal trim and accessories.
3. Section 077253 "Snow Guards" for snow guards.
4. Section 237413 "Packaged, Outdoor, Central-Station Air-Handling Units" for standard curbs specified with rooftop units.

1.3 COORDINATION

A. Coordinate layout and installation of roof accessories with roofing membrane and base flashing and interfacing and adjoining construction to provide a leakproof, weathertight, secure, and noncorrosive installation.

B. Coordinate dimensions with rough-in information or Shop Drawings of equipment to be supported.

1.4 ACTION SUBMITTALS

A. Product Data: For each type of roof accessory.

1. Include construction details, material descriptions, dimensions of individual components and profiles, and finishes.

NOT FOR BIDDING

B. Shop Drawings: For roof accessories.

1. Include plans, elevations, keyed details, and attachments to other work. Indicate dimensions, loadings, and special conditions. Distinguish between plant- and field-assembled work.

C. Samples: For each exposed product and for each color and texture specified, prepared on Samples of size to adequately show color.

1.5 INFORMATIONAL SUBMITTALS

A. Coordination Drawings: Roof plans, drawn to scale, and coordinating penetrations and roof-mounted items. Show the following:

1. Size and location of roof accessories specified in this Section.
2. Method of attaching roof accessories to roof or building structure.
3. Other roof-mounted items including mechanical and electrical equipment, ductwork, piping, and conduit.
4. Required clearances.

B. Sample Warranties: For manufacturer's special warranties.

1.6 CLOSEOUT SUBMITTALS

A. Operation and Maintenance Data: For roof accessories to include in operation and maintenance manuals.

1.7 WARRANTY

A. Special Warranty on Painted Finishes: Manufacturer's standard form in which manufacturer agrees to repair finish or replace roof accessories that show evidence of deterioration of factory-applied finishes within specified warranty period.

1. Fluoropolymer Finish: Deterioration includes, but is not limited to, the following:

a. Color fading more than 5 Hunter units when tested according to ASTM D 2244.
b. Chalking in excess of a No. 8 rating when tested according to ASTM D 4214.
c. Cracking, checking, peeling, or failure of paint to adhere to bare metal.

2. Finish Warranty Period: 20 years from date of Substantial Completion.

NOT FOR BIDDING

PART 2 - PRODUCTS

2.1 PERFORMANCE REQUIREMENTS

A. General Performance: Roof accessories shall withstand exposure to weather and resist thermally induced movement without failure, rattling, leaking, or fastener disengagement due to defective manufacture, fabrication, installation, or other defects in construction.

B. Delegated Design: Engage a qualified professional engineer, as defined in Section 014000 "Quality Requirements," to design to comply with wind performance requirements, including comprehensive engineering analysis by a qualified professional engineer, using performance requirements and design criteria indicated.

C. Wind-Restraint Performance: As indicated on Drawings.

2.2 ROOF CURBS

A. Roof Curbs: Internally reinforced roof-curb units capable of supporting superimposed live and dead loads, including equipment loads and other construction indicated on Drawings, bearing continuously on roof structure, and capable of meeting performance requirements; with welded or mechanically fastened and sealed corner joints, and integrally formed deck-mounting flange at perimeter bottom.

B. Size: Coordinate dimensions with roughing-in information or Shop Drawings of equipment to be supported.

C. Supported Load Capacity: as required by each piece of supported equipment.

D. Material: Aluminum-zinc alloy-coated steel sheet, 0.064 inch (1.63 mm) thick.

1. Finish: Two-coat fluoropolymer.
2. Color: As selected by Architect from manufacturer's full range.

E. Construction:

1. Curb Profile: Profile as indicated on Drawings compatible with roofing system.
2. On ribbed or fluted metal roofs, form deck-mounting flange at perimeter bottom to conform to roof profile.
3. Fabricate curbs to minimum height of 12 inches (305 mm) above roofing surface unless otherwise indicated.
4. Top Surface: Level top of curb, with roof slope accommodated by sloping deck-mounting flange or base of leveler frame.
5. Sloping Roofs: Where roof slope exceeds 1:48, fabricate curb with perimeter curb height tapered to accommodate roof slope so that top surface of perimeter curb is level. Equip unit with water diverter or cricket on side that obstructs water flow.
6. Insulation: Factory insulated with 1-1/2-inch- (38-mm-) thick glass-fiber board insulation.
7. Liner: Same material as curb, of manufacturer's standard thickness and finish.

NOT FOR BIDDING

8. Nailer: Factory-installed wood nailer along top flange of curb, continuous around curb perimeter.
9. Wind Restraint Straps and Base Flange Attachment: Provide wind restraint straps, welded strap connectors, and base flange attachment to roof structure at perimeter of curb, of size and spacing required to meet wind uplift requirements.
10. Platform Cap: Where portion of roof curb is not covered by equipment, provide weathertight platform cap formed from 3/4-inch (19-mm) thick plywood covered with metal sheet of same type, thickness, and finish as required for curb.
11. Metal Counterflashing: Manufacturer's standard, removable, fabricated of same metal and finish as curb.

2.3 EQUIPMENT SUPPORTS

A. Equipment Supports: Internally reinforced perimeter metal equipment supports capable of supporting superimposed live and dead loads between structural supports, including equipment loads and other construction indicated on Drawings, spanning between structural supports; capable of meeting performance requirements; with welded or mechanically fastened and sealed corner joints, integral metal cant, and integrally formed structure-mounting flange at bottom.

B. Size: Coordinate dimensions with roughing-in information or Shop Drawings of equipment to be supported.

A. Supported Load Capacity: as required by each piece of supported equipment.

A. Material: Aluminum-zinc alloy-coated steel sheet, 0.064 inch (1.63 mm) thick.

1. Finish: Two-coat fluoropolymer.
2. Color: As selected by Architect from manufacturer's full range.

B. Construction:

1. Curb Profile: Profile as indicated on Drawings compatible with roofing system.
2. On ribbed or fluted metal roofs, form deck-mounting flange at perimeter bottom to conform to roof profile.
3. Fabricate curbs to minimum height of 12 inches (305 mm) above roofing surface unless otherwise indicated.
4. Top Surface: Level top of curb, with roof slope accommodated by sloping deck-mounting flange or by use of leveler frame.
5. Sloping Roofs: Where roof slope exceeds 1:48, fabricate curb with perimeter curb height tapered to accommodate roof slope so that top surface of perimeter curb is level. Equip unit with water diverter or cricket on side that obstructs water flow.
6. Insulation: Factory insulated with 1-1/2-inch- (38-mm-) thick glass-fiber board insulation.
7. Liner: Same material as curb, of manufacturer's standard thickness and finish.
8. Nailer: Factory-installed wood nailer along top flange of curb, continuous around curb perimeter.
9. Wind Restraint Straps and Base Flange Attachment: Provide wind restraint straps, welded strap connectors, and base flange attachment to roof structure at perimeter of curb, of size and spacing required to meet wind uplift requirements.

NOT FOR BIDDING

10. Platform Cap: Where portion of roof curb is not covered by equipment, provide weathertight platform cap formed from 3/4-inch (19-mm) thick plywood covered with metal sheet of same type, thickness, and finish as required for curb.
11. Metal Counterflashing: Manufacturer's standard, removable, fabricated of same metal and finish as curb.

2.4 ROOF HATCH

A. Roof Hatches: Metal roof-hatch units with lids and insulated double-walled curbs, welded or mechanically fastened and sealed corner joints, continuous roof-to-curb counterflashing and weathertight perimeter gasketing,straight sides, and integrally formed deck-mounting flange at perimeter bottom.

1. Manufacturers: Subject to compliance with requirements, available manufacturers offering products that may be incorporated into the Work include, but are not limited to the following:

   a. Acudor Products, Inc.
   b. AES Industries, Inc.
   c. Babcock-Davis.
   d. Bilco Company (The).
   e. Bristolite Daylighting Systems, Inc.
   f. Custom Solution Roof and Metal Products.
   g. Dur-Red Products.
   h. Hi Pro International, Inc.
   i. JL Industries, Inc.; a division of the Activar Construction Products Group.
   j. KCC International Inc.
   k. Lexcor; a division of Luxalco corp.
   l. Metallic Products Corp.
   m. Milcor; Commercial Products Group of Hart & Cooley, Inc.
   n. Natural Daylighting Systems.
   o. O'Keeffe's Inc.
   p. Pate Company (The).
   q. Precision Ladders, LLC.
   r. Williams Bros. Corporation of America (The).

B. Type and Size: Single-leaf lid, 30 by 36 inches (750 by 900 mm).

C. Loads: Minimum 40-lbf/sq. ft. (1.9-kPa) external live load and 20-lbf/sq. ft. (0.95-kPa) internal uplift load.

D. Hatch Material: Zinc-coated (galvanized) steel sheet.

1. Thickness: Manufacturer's standard thickness for hatch size indicatedion>.
2. Finish: Mill phosphatized.

E. Construction.

1. Insulation: Polyisocyanurate board.

NOT FOR BIDDING

a. R-Value: 12.0 according to ASTM C 1363.

2. Nailer: Factory-installed wood nailer continuous around hatch perimeter.
3. Hatch Lid: Opaque, insulated, and double walled, with manufacturer's standard metal liner of same material and finish as outer metal lid.
4. Curb Liner: Manufacturer's standard, of same material and finish as metal curb.
5. On ribbed or fluted metal roofs, form flange at perimeter bottom to conform to roof profile.
6. Fabricate curbs to minimum height of 12 inches (305 mm) above roofing surface unless otherwise indicated.

F. Hardware: Spring operators, hold-open arm, galvanized-steel spring latch with turn handles, galvanized-steel butt- or pintle-type hinge system, and padlock hasps inside and outside.

1. Provide two-point latch on lids larger than 84 inches (2130 mm).

2.5 PIPE AND DUCT SUPPORTS

A. Curb-Mounted Pipe Supports: Galvanized steel support with welded or mechanically fastened and sealed corner joints,straight sides, and integrally formed deck-mounting flange at perimeter bottom; with adjustable-height roller-bearing pipe support accommodating up to 20-inch- (508-mm-) diameter pipe or conduit and with provision for pipe retainer; as required for quantity of pipe runs and sizes.

B. Duct Supports: Extruded-aluminum, urethane-insulated supports, 2 inches (50 mm) in diameter; with manufacturer's recommended hardware for mounting to structure or structural roof deck.

2.6 PIPE PORTALS

A. Curb-Mounted Pipe Portal: Insulated roof-curb units with welded or mechanically fastened and sealed corner joints, straight sides, and integrally formed deck-mounting flange at perimeter bottom; with weathertight curb cover with single or multiple collared openings and pressure-sealed conically shaped EPDM protective rubber caps sized for piping indicated, with stainless-steel snaplock swivel clamps.

B. Flashing Pipe Portal: Formed aluminum membrane-mounting flashing flange and sleeve with collared opening and pressure-sealed conically shaped EPDM protective rubber cap sized for piping indicated, with stainless-steel snaplock swivel clamps.

2.7 METAL MATERIALS

A. Zinc-Coated (Galvanized) Steel Sheet: ASTM A 653/A 653M, G90 (Z275) coating designation and mill phosphatized for field painting where indicated.

1. Mill-phosphatized Finish: Manufacturer's standard for field painting.
2. Factory Prime Coating: Where field painting is indicated, apply pretreatment and white or light-colored, factory-applied, baked-on epoxy primer coat, with a minimum dry film thickness of 0.2 mil (0.005 mm).

NOT FOR BIDDING

3. Exposed Coil-Coated Finish: Prepainted by the coil-coating process to comply with ASTM A 755/A 755M. Prepare, pretreat, and apply coating to exposed metal surfaces to comply with coating and resin manufacturers' written instructions.

   a. Two-Coat Fluoropolymer Finish: AAMA 621. System consisting of primer and fluoropolymer color topcoat containing not less than 70 percent PVDF resin by weight.

4. Baked-Enamel or Powder-Coat Finish: After cleaning and pretreating, apply manufacturer's standard two-coat, baked-on finish consisting of prime coat and thermosetting topcoat to a minimum dry film thickness of 2 mils (0.05 mm).
5. Concealed Finish: Pretreat with manufacturer's standard white or light-colored acrylic or polyester-backer finish consisting of prime coat and wash coat, with a minimum total dry film thickness of 0.5 mil (0.013 mm).

B. Stainless-Steel Sheet and Shapes: ASTM A 240/A 240M or ASTM A 666, Type 304.

C. Steel Shapes: ASTM A 36/A 36M, hot-dip galvanized according to ASTM A 123/A 123M unless otherwise indicated.

D. Steel Tube: ASTM A 500/A 500M, round tube.

E. Galvanized-Steel Tube: ASTM A 500/A 500M, round tube, hot-dip galvanized according to ASTM A 123/A 123M.

F. Steel Pipe: ASTM A 53/A 53M, galvanized.

2.8 MISCELLANEOUS MATERIALS

A. General: Provide materials and types of fasteners, protective coatings, sealants, and other miscellaneous items required by manufacturer for a complete installation.

B. Polyisocyanurate Board Insulation: ASTM C 1289, thickness and thermal resistivity as indicated.

C. Wood Nailers: Softwood lumber, pressure treated with waterborne preservatives for aboveground use acceptable to authorities having jurisdiction, containing no arsenic or chromium, and complying with AWPA C2; not less than 1-1/2 inches (38 mm) thick.

D. Bituminous Coating: Cold-applied asphalt emulsion complying with ASTM D 1187/D 1187M.

E. Underlayment:

1. Felt: ASTM D 226/D 226M, Type II (No. 30), asphalt-saturated organic felt, non perforated.
2. Polyethylene Sheet: 6-mil- (0.15-mm-) thick polyethylene sheet complying with ASTM D 4397.
3. Slip Sheet: Building paper, 3 lb/100 sq. ft. (0.16 kg/sq. m) minimum, rosin sized.
4. Self-Adhering, High-Temperature Sheet: Minimum 30 to 40 mils (0.76 to 1.0 mm) thick, consisting of slip-resisting polyethylene-film top surface laminated to layer of butyl or

NOT FOR BIDDING

SBS-modified asphalt adhesive, with release-paper backing; cold applied. Provide primer when recommended by underlayment manufacturer.

5. Fasteners: Roof accessory manufacturer's recommended fasteners suitable for application and metals being fastened. Match finish of exposed fasteners with finish of material being fastened. Provide nonremovable fastener heads to exterior exposed fasteners. Furnish the following unless otherwise indicated:
6. Fasteners for Zinc-Coated or Aluminum-Zinc Alloy-Coated Steel: Series 300 stainless steel or hot-dip zinc-coated steel according to ASTM A 153/A 153M or ASTM F 2329.
7. Fasteners for Aluminum Sheet: Aluminum or Series 300 stainless steel.
8. Fasteners for Stainless-Steel Sheet: Series 300 stainless steel.

F. Gaskets: Manufacturer's standard tubular or fingered design of neoprene, EPDM, PVC, or silicone or a flat design of foam rubber, sponge neoprene, or cork.

G. Elastomeric Sealant: ASTM C 920, elastomeric polyurethane polymer sealant as recommended by roof accessory manufacturer for installation indicated; low modulus; of type, grade, class, and use classifications required to seal joints and remain watertight.

H. Butyl Sealant: ASTM C 1311, single-component, solvent-release butyl rubber sealant; polyisobutylene plasticized; heavy bodied for expansion joints with limited movement.

I. Asphalt Roofing Cement: ASTM D 4586/D 4586M, asbestos free, of consistency required for application.

2.9 GENERAL FINISH REQUIREMENTS

A. Comply with NAAMM's "Metal Finishes Manual for Architectural and Metal Products" for recommendations for applying and designating finishes.

B. Appearance of Finished Work: Noticeable variations in same piece are not acceptable. Variations in appearance of adjoining components are acceptable if they are within the range of approved Samples and are assembled or installed to minimize contrast.

PART 3 - EXECUTION

3.1 EXAMINATION

A. Examine substrates, areas, and conditions, with Installer present, to verify actual locations, dimensions and other conditions affecting performance of the Work.

B. Verify that substrate is sound, dry, smooth, clean, sloped for drainage, and securely anchored.

C. Verify dimensions of roof openings for roof accessories.

D. Proceed with installation only after unsatisfactory conditions have been corrected.

NOT FOR BIDDING

3.2 INSTALLATION

A. General: Install roof accessories according to manufacturer's written instructions.

1. Install roof accessories level; plumb; true to line and elevation; and without warping, jogs in alignment, buckling, or tool marks.
2. Anchor roof accessories securely in place so they are capable of resisting indicated loads.
3. Use fasteners, separators, sealants, and other miscellaneous items as required to complete installation of roof accessories and fit them to substrates.
4. Install roof accessories to resist exposure to weather without failure, rattling, leaking, or loosening of fasteners and seals.

B. Metal Protection: Protect metals against galvanic action by separating dissimilar metals from contact with each other or with corrosive substrates by painting contact surfaces with bituminous coating or by other permanent separation as recommended by manufacturer.

1. Coat concealed side of uncoated aluminum roof accessories with bituminous coating where in contact with wood, ferrous metal, or cementitious construction.
2. Underlayment: Where installing roof accessories directly on cementitious or wood substrates, install a course of underlayment and cover with manufacturer's recommended slip sheet.
3. Bed flanges in thick coat of asphalt roofing cement where required by manufacturers of roof accessories for waterproof performance.

C. Roof Curb Installation: Install each roof curb so top surface is level.

D. Equipment Support Installation: Install equipment supports so top surfaces are level with each other.

E. Roof-Hatch Installation:

1. Verify that roof hatch operates properly. Clean, lubricate, and adjust operating mechanism and hardware.
2. Attach safety railing system to roof-hatch curb.
3. Attach ladder-assist post according to manufacturer's written instructions.

F. Pipe Support Installation: Comply with MSS SP-58 and MSS SP-89. Install supports and attachments as required to properly support piping. Arrange for grouping of parallel runs of horizontal piping, and support together.

1. Pipes of Various Sizes: Space supports for smallest pipe size or install intermediate supports for smaller diameter pipes as specified for individual pipe hangers.

G. Preformed Flashing-Sleeve and Flashing Pipe Portal Installation: Secure flashing sleeve to roof membrane according to flashing-sleeve manufacturer's written instructions; flash sleeve flange to surrounding roof membrane according to roof membrane manufacturer's instructions.

H. Seal joints with elastomeric sealant as required by roof accessory manufacturer.

NOT FOR BIDDING

3.3 REPAIR AND CLEANING

A. Galvanized Surfaces: Clean field welds, bolted connections, and abraded areas and repair galvanizing according to ASTM A 780/A 780M.

B. Touch up factory-primed surfaces with compatible primer ready for field painting according to Section 099113 "Exterior Painting."

C. Clean exposed surfaces according to manufacturer's written instructions.

D. Clean off excess sealants.

E. Replace roof accessories that have been damaged or that cannot be successfully repaired by finish touchup or similar minor repair procedures.

END OF SECTION 077200

NOT FOR BIDDING

SECTION 077253 - SNOW GUARDS (ALTERNATE 1, 4A & 5A)

PART 1 - GENERAL

1.1 RELATED DOCUMENTS

A. Drawings and general provisions of the Contract, including General and Supplementary Conditions and Division 01 Specification Sections, apply to this section.

1.2 SUMMARY

A. Section Includes:

1. Pad-type, flat-mounted snow guards.

1.3 ACTION SUBMITTALS

A. Product Data: Include construction details, material descriptions, dimensions of individual components and profiles, and finishes for snow guards.

B. Shop Drawings: Include roof plans showing layouts and attachment details of snow guards.

1. Include details of rail-type snow guards.
2. Include calculation of number and location of snow guards based on snow load, roof slope, roof type, components, spacings, and finish.

C. Samples: Full-size unit.

1.4 INFORMATIONAL SUBMITTALS

A. Product Test Reports: For each type of snow guard, for tests performed by manufacturer and witnessed by a qualified testing agency.

PART 2 - PRODUCTS

2.1 PERFORMANCE REQUIREMENTS

A. Performance Requirements: Provide snow guards that withstand exposure to weather and resist thermally induced movement without failure, rattling, or fastener disengagement due to defective manufacture, fabrication, installation, or other defects in construction.

1. Temperature Change: 120 deg F (67 deg C), ambient; 180 deg F (100 deg C), material surfaces.

NOT FOR BIDDING

B. Structural Performance:

1. Snow Loads: As indicated on Drawings.

2.2 PAD-TYPE SNOW GUARDS

A. Flat-Mounted Metal Snow Guard Pads:

1. Manufacturers: Subject to compliance with requirements, available manufacturers offering products that may be incorporated into the Work include, but are not limited to, the following:

   a. Alpine SnowGuards, a division of Vermont Slate & Copper Services, Inc.
   b. Berger Building Products, Inc.
   c. PMC Industries, Inc.
   d. Roofers Edge.
   e. Sieger Snow Guards Inc.
   f. Sno-Gem, Inc.
   g. SnoGuard.
   h. TRA SNOW AND SUN, INC.
   i. Zaleski Snow-Guard and Roofing Specialties Inc.

2. Material: Manufacturer's standard non-corrosive metal.
3. Finish and Color: Powder coat; color as selected by Architect from manufacturer's full range.

PART 3 - EXECUTION

3.1 EXAMINATION

A. Examine substrates and conditions, with Installer present, for compliance with requirements for installation tolerances, snow guard attachment, and other conditions affecting performance of the Work.

1. Verify compatibility with and suitability of substrates including compatibility with existing finishes or primers.

B. Proceed with installation only after unsatisfactory conditions have been corrected.

3.2 PREPARATION

A. Clean and prepare substrates for bonding snow guards.

B. Prime substrates according to snow guard manufacturer's written instructions.

NOT FOR BIDDING

3.3 INSTALLATION

A. Install snow guards according to manufacturer's written instructions. Space rows as recommended by manufacturer.

1. Provide two rows of snow guards, at along the eave edge os all sloped roofs, spaced 12 inches apart, beginning 12 inches up from gutter, with each snow guard centered between panel ribs

B. Attachment for Standing-Seam Metal Roofing:

1. Do not use fasteners that will penetrate metal roofing, or fastening methods that void metal roofing finish warranty.

END OF SECTION 077253

NOT FOR BIDDING

(PAGE LEFT BLANK)

NOT FOR BIDDING

SECTION 079200 - JOINT SEALANTS

PART 1 - GENERAL

1.1 RELATED DOCUMENTS

A. Drawings and general provisions of the Contract, including General and Supplementary Conditions and Division 01 Specification Sections, apply to this section.

1.2 SUMMARY

A. Section Includes:

1. Silicone joint sealants.
2. Urethane joint sealants.
3. Latex joint sealants.
4. Acoustical joint sealants.

B. Related Sections:

1. Division 08 Section "Glazing" for glazing sealants.
2. Division 09 Section "Gypsum Board" for sealing perimeter joints.
3. Division 09 Section "Tiling" for sealing tile joints.

1.3 PRECONSTRUCTION TESTING

A. Preconstruction Compatibility and Adhesion Testing: Submit to joint-sealant manufacturers, for testing indicated below, samples of materials that will contact or affect joint sealants.

1. Use ASTM C 1087 to determine whether priming and other specific joint preparation techniques are required to obtain rapid, optimum adhesion of joint sealants to joint substrates.
2. Submit not fewer than eight pieces of each kind of material, including joint substrates, shims, joint-sealant backings, secondary seals, and miscellaneous materials.
3. Schedule sufficient time for testing and analyzing results to prevent delaying the Work.
4. For materials failing tests, obtain joint-sealant manufacturer's written instructions for corrective measures including use of specially formulated primers.
5. Testing will not be required if joint-sealant manufacturers submit joint preparation data that are based on previous testing, not older than 24 months, of sealant products for adhesion to, and compatibility with, joint substrates and other materials matching those submitted.

B. Preconstruction Field-Adhesion Testing: Before installing sealants, field test their adhesion to Project joint substrates as follows:

1. Locate test joints where indicated on Project or, if not indicated, as directed by Architect.
2. Conduct field tests for each application indicated below:

NOT FOR BIDDING

a. Each kind of sealant and joint substrate indicated.

3. Notify Architect seven days in advance of dates and times when test joints will be erected.
4. Arrange for tests to take place with joint-sealant manufacturer's technical representative present.

   a. Test Method: Test joint sealants according to Method A, Field-Applied Sealant Joint Hand Pull Tab, in Appendix X1 in ASTM C 1193 or Method A, Tail Procedure, in ASTM C 1521.

      1) For joints with dissimilar substrates, verify adhesion to each substrate separately; extend cut along one side, verifying adhesion to opposite side. Repeat procedure for opposite side.

5. Report whether sealant failed to adhere to joint substrates or tore cohesively. Include data on pull distance used to test each kind of product and joint substrate. For sealants that fail adhesively, retest until satisfactory adhesion is obtained.
6. Evaluation of Preconstruction Field-Adhesion-Test Results: Sealants not evidencing adhesive failure from testing, in absence of other indications of noncompliance with requirements, will be considered satisfactory. Do not use sealants that fail to adhere to joint substrates during testing.

1.4 ACTION SUBMITTALS

A. Product Data: For each joint-sealant product indicated.

B. Samples for Initial Selection: Manufacturer's color charts consisting of strips of cured sealants showing the full range of colors available for each product exposed to view.

C. Samples for Verification: For each kind and color of joint sealant required, provide Samples with joint sealants in 1/2-inch- (13-mm-) wide joints formed between two 6-inch- (150-mm-) long strips of material matching the appearance of exposed surfaces adjacent to joint sealants.

D. Joint-Sealant Schedule: Include the following information:

1. Joint-sealant application, joint location, and designation.
2. Joint-sealant manufacturer and product name.
3. Joint-sealant formulation.
4. Joint-sealant color.

1.5 INFORMATIONAL SUBMITTALS

A. Qualification Data: For qualified Installer and testing agency.

B. Product Certificates: For each kind of joint sealant and accessory, from manufacturer.

C. Sealant, Waterproofing, and Restoration Institute (SWRI) Validation Certificate: For each sealant specified to be validated by SWRI's Sealant Validation Program.

NOT FOR BIDDING

D. Product Test Reports: Based on evaluation of comprehensive tests performed by a qualified testing agency, indicating that sealants comply with requirements.

E. Preconstruction Compatibility and Adhesion Test Reports: From sealant manufacturer, indicating the following:

1. Materials forming joint substrates and joint-sealant backings have been tested for compatibility and adhesion with joint sealants.
2. Interpretation of test results and written recommendations for primers and substrate preparation needed for adhesion.

F. Preconstruction Field-Adhesion Test Reports: Indicate which sealants and joint preparation methods resulted in optimum adhesion to joint substrates based on testing specified in "Preconstruction Testing" Article.

G. Field-Adhesion Test Reports: For each sealant application tested.

H. Warranties: Sample of special warranties.

1.6 QUALITY ASSURANCE

A. Installer Qualifications: Manufacturer's authorized representative who is trained and approved for installation of units required for this Project.

B. Source Limitations: Obtain each kind of joint sealant from single source from single manufacturer.

C. Product Testing: Test joint sealants using a qualified testing agency.

1. Testing Agency Qualifications: An independent testing agency qualified according to ASTM C 1021 to conduct the testing indicated.
2. Test according to SWRI's Sealant Validation Program for compliance with requirements specified by reference to ASTM C 920 for adhesion and cohesion under cyclic movement, adhesion-in-peel, and indentation hardness.

D. Mockups: Install sealant in mockups of assemblies specified in other Sections that are indicated to receive joint sealants specified in this Section. Use materials and installation methods specified in this Section.

E. Preinstallation Conference: Conduct conference at Project site.

1.7 PROJECT CONDITIONS

A. Do not proceed with installation of joint sealants under the following conditions:

1. When ambient and substrate temperature conditions are outside limits permitted by joint-sealant manufacturer or are below 40 deg F (5 deg C).
2. When joint substrates are wet.
3. Where joint widths are less than those allowed by joint-sealant manufacturer for applications indicated.

NOT FOR BIDDING

4. Where contaminants capable of interfering with adhesion have not yet been removed from joint substrates.

1.8 WARRANTY

A. Special Installer's Warranty: Manufacturer's standard form in which installer agrees to repair or replace joint sealants that do not comply with performance and other requirements specified in this Section within specified warranty period.

1. Warranty Period: Two years from date of Substantial Completion.

B. Special Manufacturer's Warranty: Manufacturer's standard form in which joint-sealant manufacturer agrees to furnish joint sealants to repair or replace those that do not comply with performance and other requirements specified in this Section within specified warranty period.

1. Warranty Period: 10 years from date of Substantial Completion.

C. Special warranties specified in this article exclude deterioration or failure of joint sealants from the following:

1. Movement of the structure caused by structural settlement or errors attributable to design or construction resulting in stresses on the sealant exceeding sealant manufacturer's written specifications for sealant elongation and compression.
2. Disintegration of joint substrates from natural causes exceeding design specifications.
3. Mechanical damage caused by individuals, tools, or other outside agents.
4. Changes in sealant appearance caused by accumulation of dirt or other atmospheric contaminants.

PART 2 - PRODUCTS

2.1 MATERIALS, GENERAL

A. Compatibility: Provide joint sealants, backings, and other related materials that are compatible with one another and with joint substrates under conditions of service and application, as demonstrated by joint-sealant manufacturer, based on testing and field experience.

B. VOC Content of Interior Sealants: Sealants and sealant primers used inside the weatherproofing system shall comply with the following limits for VOC content when calculated according to 40 CFR 59, Subpart D (EPA Method 24):

1. Architectural Sealants: 250 g/L.
2. Sealant Primers for Nonporous Substrates: 250 g/L.
3. Sealant Primers for Porous Substrates: 775 g/L.

C. Liquid-Applied Joint Sealants: Comply with ASTM C 920 and other requirements indicated for each liquid-applied joint sealant specified, including those referencing ASTM C 920 classifications for type, grade, class, and uses related to exposure and joint substrates.

NOT FOR BIDDING

1. Suitability for Immersion in Liquids. Where sealants are indicated for Use I for joints that will be continuously immersed in liquids, provide products that have undergone testing according to ASTM C 1247. Liquid used for testing sealants is deionized water, unless otherwise indicated.

D. Stain-Test-Response Characteristics: Where sealants are specified to be non-staining to porous substrates, provide products that have undergone testing according to ASTM C 1248 and have not stained porous joint substrates indicated for Project.

E. Suitability for Contact with Food: Where sealants are indicated for joints that will come in repeated contact with food, provide products that comply with 21 CFR 177.2600.

F. Colors of Exposed Joint Sealants: As selected by Architect from manufacturer's full range.

2.2 SILICONE JOINT SEALANTS

A. Mildew-Resistant, Single-Component, Nonsag, Neutral-Curing Silicone Joint Sealant ES-1: ASTM C 920, Type S, Grade NS, Class 25, for Use NT.

1. Products: Subject to compliance with requirements, available products that may be incorporated into the Work include, but are not limited to, the following:

a. Pecora Corporation; 898.

2.3 URETHANE JOINT SEALANTS

A. Multicomponent, Nonsag, Urethane Joint Sealant ES-2: ASTM C 920, Type M, Grade NS, Class 50, for Use NT .

1. Products: Subject to compliance with requirements, available products that may be incorporated into the Work include, but are not limited to, the following:

a. Pecora Corporation; Dynatrol II.
b. Polymeric Systems, Inc.; PSI-270.
c. Tremco Incorporated; Dymeric 240.

2.4 LATEX JOINT SEALANTS

A. Latex Joint Sealant LS-1: Acrylic latex or siliconized acrylic latex, ASTM C 834, Type OP, Grade NF.

1. Products: Subject to compliance with requirements, available products that may be incorporated into the Work include, but are not limited to, the following:

a. BASF Building Systems; Sonolac.
b. Bostik, Inc.; Chem-Calk 600.
c. May National Associates, Inc.; Bondaflex 600.
d. Pecora Corporation; AC-20+.
e. Schnee-Morehead, Inc.; SM 8200.

NOT FOR BIDDING

f. Tremco Incorporated; Tremflex 834.

2.5 SOLVENT-RELEASE-CURING JOINT SEALANTS

A. Butyl-Rubber-Based Joint Sealant SR-1: ASTM C 1311.

1. Products: Subject to compliance with requirements, available products that may be incorporated into the Work include, but are not limited to, the following:

a. Bostik, Inc.; Chem-Calk 300.
b. Pecora Corporation; BC-158.
c. Tremco Incorporated; Tremco Butyl Sealant.

2.6 ACOUSTICAL JOINT SEALANTS

A. Acoustical Joint Sealant AS-1: Manufacturer's standard nonsag, paintable, nonstaining latex sealant complying with ASTM C 834. Product effectively reduces airborne sound transmission through perimeter joints and openings in building construction as demonstrated by testing representative assemblies according to ASTM E 90.

1. Products: Subject to compliance with requirements, available products that may be incorporated into the Work include, but are not limited to, the following:

a. Pecora Corporation; AC-20 FTR.
b. USG Corporation; SHEETROCK Acoustical Sealant.

2.7 JOINT SEALANT BACKING

A. General: Provide sealant backings of material that are nonstaining; are compatible with joint substrates, sealants, primers, and other joint fillers; and are approved for applications indicated by sealant manufacturer based on field experience and laboratory testing.

B. Cylindrical Sealant Backings: ASTM C 1330, Type C (closed-cell material with a surface skin), Type O (open-cell material), Type B (bicellular material with a surface skin) or any of the preceding types, as approved in writing by joint-sealant manufacturer for joint application indicated, and of size and density to control sealant depth and otherwise contribute to producing optimum sealant performance.

C. Bond-Breaker Tape: Polyethylene tape or other plastic tape recommended by sealant manufacturer for preventing sealant from adhering to rigid, inflexible joint-filler materials or joint surfaces at back of joint. Provide self-adhesive tape where applicable.

2.8 MISCELLANEOUS MATERIALS

A. Primer: Material recommended by joint-sealant manufacturer where required for adhesion of sealant to joint substrates indicated, as determined from preconstruction joint-sealant-substrate tests and field tests.

NOT FOR BIDDING

B. Cleaners for Nonporous Surfaces: Chemical cleaners acceptable to manufacturers of sealants and sealant backing materials, free of oily residues or other substances capable of staining or harming joint substrates and adjacent nonporous surfaces in any way, and formulated to promote optimum adhesion of sealants to joint substrates.

C. Masking Tape: Nonstaining, nonabsorbent material compatible with joint sealants and surfaces adjacent to joints.

PART 3 - EXECUTION

3.1 EXAMINATION

A. Examine joints indicated to receive joint sealants, with Installer present, for compliance with requirements for joint configuration, installation tolerances, and other conditions affecting joint-sealant performance.

B. Proceed with installation only after unsatisfactory conditions have been corrected.

3.2 PREPARATION

A. Surface Cleaning of Joints: Clean out joints immediately before installing joint sealants to comply with joint-sealant manufacturer's written instructions and the following requirements:

1. Remove all foreign material from joint substrates that could interfere with adhesion of joint sealant, including dust, paint, (except for permanent, protective coatings tested and approved for sealant adhesion and compatibility by sealant manufacturer), old joint sealants, oil, grease, waterproofing, water repellents, water, surface dirt, and frost.
2. Clean porous joint substrate surfaces by brushing, grinding, mechanical abrading, or a combination of these methods to produce a clean, sound substrate capable of developing optimum bond with joint sealants. Remove loose particles remaining after cleaning operations above by vacuuming or blowing out joints with oil-free compressed air. Porous joint substrates include the following:

   a. Concrete.
   b. Masonry.
   c. Unglazed surfaces of ceramic tile.
   d. Exterior insulation and finish systems.

3. Remove laitance and form-release agents from concrete.
4. Clean nonporous joint substrate surfaces with chemical cleaners or other means that do not stain, damage substrates, or leave residues capable of interfering with adhesion of joint sealant. Nonporous joint substrates include the following:

   a. Metal.
   b. Glass.
   c. Porcelain enamel.
   d. Glazed surfaces of ceramic tile.

NOT FOR BIDDING

B. Joint Priming: Prime joint substrates where recommended by joint-sealant manufacturer or as indicated by preconstruction joint-sealant-substrate tests or prior experience. Apply primer to comply with joint-sealant manufacturer's written instructions. Confine primers to areas of joint-sealant bond; do not allow spillage or migration onto adjoining surfaces.

C. Masking Tape: Use masking tape where required to prevent contact of sealant or primer with adjoining surfaces that otherwise would be permanently stained or damaged by such contact or by cleaning methods required to remove sealant smears. Remove tape immediately after tooling without disturbing joint seal.

3.3 INSTALLATION OF JOINT SEALANTS

A. General: Comply with joint-sealant manufacturer's written installation instructions for products and applications indicated, unless more stringent requirements apply.

B. Sealant Installation Standard: Comply with recommendations in ASTM C 1193 for use of joint sealants as applicable to materials, applications, and conditions indicated.

C. Install sealant backings of kind indicated to support sealants during application and at position required to produce cross-sectional shapes and depths of installed sealants relative to joint widths that allow optimum sealant movement capability.

1. Do not leave gaps between ends of sealant backings.
2. Do not stretch, twist, puncture, or tear sealant backings.
3. Remove absorbent sealant backings that have become wet before sealant application and replace them with dry materials.

D. Install bond-breaker tape behind sealants where sealant backings are not used between sealants and backs of joints.

E. Install sealants using proven techniques that comply with the following and at the same time backings are installed:

1. Place sealants so they directly contact and fully wet joint substrates.
2. Completely fill recesses in each joint configuration.
3. Produce uniform, cross-sectional shapes and depths relative to joint widths that allow optimum sealant movement capability.

F. Tooling of Nonsag Sealants: Immediately after sealant application and before skinning or curing begins, tool sealants according to requirements specified in subparagraphs below to form smooth, uniform beads of configuration indicated; to eliminate air pockets; and to ensure contact and adhesion of sealant with sides of joint.

1. Remove excess sealant from surfaces adjacent to joints.
2. Use tooling agents that are approved in writing by sealant manufacturer and that do not discolor sealants or adjacent surfaces.
3. Provide concave joint profile per Figure 8A in ASTM C 1193, unless otherwise indicated.
4. Provide flush joint profile where indicated per Figure 8B in ASTM C 1193.

NOT FOR BIDDING

5. Provide recessed joint configuration of recess depth and at locations indicated per Figure 8C in ASTM C 1193.

   a. Use masking tape to protect surfaces adjacent to recessed tooled joints.

G. Installation of Preformed Silicone-Sealant System: Comply with the following requirements:

1. Apply masking tape to each side of joint, outside of area to be covered by sealant system.
2. Apply silicone sealant to each side of joint to produce a bead of size complying with preformed silicone-sealant system manufacturer's written instructions and covering a bonding area of not less than 3/8 inch (10 mm). Hold gage of sealant bead 1/4 inch (6 mm) inside masking tape.
3. Within 10 minutes of sealant application, press silicone extrusion into sealant to wet extrusion and substrate. Use a roller to apply consistent pressure and ensure uniform contact between sealant and both extrusion and substrate.
4. Complete installation of sealant system in horizontal joints before installing in vertical joints. Lap vertical joints over horizontal joints. At ends of joints, cut silicone extrusion with a razor knife.

H. Installation of Preformed Foam Sealants: Install each length of sealant immediately after removing protective wrapping. Do not pull or stretch material. Produce seal continuity at ends, turns, and intersections of joints. For applications at low ambient temperatures, apply heat to sealant in compliance with sealant manufacturer's written instructions.

I. Acoustical Sealant Installation: At sound-rated assemblies and elsewhere as indicated, seal construction at perimeters, behind control joints, and at openings and penetrations with a continuous bead of acoustical sealant. Install acoustical sealant at both faces of partitions at perimeters and through penetrations. Comply with ASTM C 919 and with manufacturer's written recommendations.

3.4 FIELD QUALITY CONTROL

A. Field-Adhesion Testing: Field test joint-sealant adhesion to joint substrates as follows:

1. Extent of Testing: Test completed and cured sealant joints as follows:

   a. Perform 1 tests for the first 1000 feet (300 m) of joint length for each kind of sealant and joint substrate.
   b. Perform 1 test for each 1000 feet (300 m) of joint length thereafter or 1 test per each floor per elevation.

2. Test Method: Test joint sealants according to Method A, Field-Applied Sealant Joint Hand Pull Tab, in Appendix X1 in ASTM C 1193 or Method A, Tail Procedure, in ASTM C 1521.

   a. For joints with dissimilar substrates, verify adhesion to each substrate separately; extend cut along one side, verifying adhesion to opposite side. Repeat procedure for opposite side.

3. Inspect tested joints and report on the following:

NOT FOR BIDDING

a. Whether sealants filled joint cavities and are free of voids.
b. Whether sealant dimensions and configurations comply with specified requirements.
c. Whether sealants in joints connected to pulled-out portion failed to adhere to joint substrates or tore cohesively. Include data on pull distance used to test each kind of product and joint substrate. Compare these results to determine if adhesion passes sealant manufacturer's field-adhesion hand-pull test criteria.

4. Record test results in a field-adhesion-test log. Include dates when sealants were installed, names of persons who installed sealants, test dates, test locations, whether joints were primed, adhesion results and percent elongations, sealant fill, sealant configuration, and sealant dimensions.
5. Repair sealants pulled from test area by applying new sealants following same procedures used originally to seal joints. Ensure that original sealant surfaces are clean and that new sealant contacts original sealant.

B. Evaluation of Field-Adhesion Test Results: Sealants not evidencing adhesive failure from testing or noncompliance with other indicated requirements will be considered satisfactory. Remove sealants that fail to adhere to joint substrates during testing or to comply with other requirements. Retest failed applications until test results prove sealants comply with indicated requirements.

3.5 CLEANING

A. Clean off excess sealant or sealant smears adjacent to joints as the Work progresses by methods and with cleaning materials approved in writing by manufacturers of joint sealants and of products in which joints occur.

3.6 PROTECTION

A. Protect joint sealants during and after curing period from contact with contaminating substances and from damage resulting from construction operations or other causes so sealants are without deterioration or damage at time of Substantial Completion. If, despite such protection, damage or deterioration occurs, cut out and remove damaged or deteriorated joint sealants immediately so installations with repaired areas are indistinguishable from original work.

3.7 JOINT-SEALANT SCHEDULE

A. Joint-Sealant Application JS-1: Exterior horizontal nontraffic and traffic isolation and contraction joints in cast-in-place concrete slabs.

1. Joint Sealant: Multicomponent nonsag urethane sealant ES-2.

2. Joint-Sealant Color: As selected by Architect from manufacturer's full range.

B. Joint-Sealant Application JS-2: Exterior butt and lap joints between metal panels.

1. Joint Sealant: Multicomponent nonsag urethane sealant ES-2.

NOT FOR BIDDING

2. Joint-Sealant Color: As selected by Architect from manufacturer's full range.

C. Joint-Sealant Application JS-3: Exterior vertical joints between different materials, including those listed above.

1. Joint Sealant: Multicomponent nonsag urethane sealant ES-2.

2. Joint-Sealant Color: As selected by Architect from manufacturer's full range.

D. Joint-Sealant Application JS-6: Exterior perimeter joints between wood siding, shingles, and cast-in-place concrete and frames of doors, windows, and louvers.

1. Joint Sealant: Multi-component nonsag urethane sealant ES-2.

2. Joint-Sealant Color: As selected by Architect from manufacturer's full range.

E. Joint-Sealant Application JS-7: Vertical control joints on exposed interior surfaces of exterior walls.

1. Joint Sealant: Multi-component nonsag urethane sealant ES-2.

2. Joint-Sealant Color: As selected by Architect from manufacturer's full range.

F. Joint-Sealant Application JS-8: Interior perimeter joints of exterior openings.

1. Joint Sealant: Multi-component nonsag urethane sealant ES-2.

2. Joint-Sealant Color: As selected by Architect from manufacturer's full range.

G. Joint-Sealant Application JS-9: Interior joints between all plumbing fixtures and adjoining walls, floors, and counters. Interior joints between floor and wall ceramic tile. Interior joints between cut resilient floor tiles and hollow metal frames

1. Joint Sealant: Single-component mildew-resistant neutral-curing silicone sealant ES-1.

2. Joint-Sealant Color: White between sinks, toilets, urinals and other plumbing fixtures and adjoining surfaces, clear or translucent between casework and adjoining surfaces, clear or translucent between toilet accessories and adjoining surfaces, clear or translucent between cut edges of resilient floor tile and hollow metal frames.

H. Joint-Sealant Application LS-1: Perimeter joints between interior wall surfaces and frames of interior doors and windows.

1. Joint Sealant: Latex sealant.

2. Joint-Sealant Color: As selected by Architect from manufacturer's full range.

END OF SECTION 079200

NOT FOR BIDDING

SECTION 082200 – FIBERGLASS REINFORCED PLASTIC DOORS AND FRAMES

PART 1 - GENERAL

1.1 RELATED DOCUMENTS

A. Drawings and general provisions of the Contract, including General and Supplementary Conditions and Division 01 Specification Sections, apply to this section.

1.2 SUMMARY

A. Section Includes:

1. Fiberglass Reinforced Plastic (FRP) Doors.
2. Fiberglass Resin Transfer Molded Door Frames.

B. Related Sections:

1. Division 06 Section "Interior Finish Carpentry" for FRP door frames.
2. Division 08 Section "Plastic Glazing" for glass view panels in flush wood doors.

1.3 ACTION SUBMITTALS

A. Product Data: For each type of door indicated. Include details of core and edge construction, louvers, and trim for openings.

B. Shop Drawings: Indicate location, size, and hand of each door; elevation of each kind of door; construction details not covered in Product Data; location and extent of hardware blocking; and other pertinent data.

1. Indicate dimensions and locations of mortises and holes for hardware.
2. Indicate dimensions and locations of cutouts.
3. Indicate requirements for veneer matching.
4. Indicate doors to be factory finished and finish requirements.
5. Indicate fire-protection ratings for fire-rated doors.

C. Samples for Initial Selection: For factory-finished doors.

D. Samples for Verification:

1. Factory finishes applied to actual door face materials, approximately 8 by 10 inches (200 by 250 mm), for each material and finish.
2. Plastic laminate, 6 inches (150 mm) square, for each color, texture, and pattern selected.
3. Corner sections of doors, approximately 8 by 10 inches (200 by 250 mm), with door faces and edges representing actual materials to be used.

   a. Provide samples for each species of veneer and solid lumber required.

NOT FOR BIDDING

b. Provide samples for each color, texture, and pattern of plastic laminate required.
c. Finish veneer-faced door samples with same materials proposed for factory-finished doors.

4. Louver blade and frame sections, 6 inches (150 mm) long, for each material and finish specified.
5. Frames for light openings, 6 inches (150 mm) long, for each material, type, and finish required.

1.4 INFORMATIONAL SUBMITTALS

A. Warranty: Sample of special warranty.

1.5 QUALITY ASSURANCE

A. Manufacturer Qualifications: A qualified manufacturer that is certified for chain of custody by an FSC-accredited certification body.

B. Source Limitations: Obtain FRP doors from single manufacturer.

C. Reference Standards

1. Door Properties
   a. Standard test method for steady state thermal transmission properties by means of the heat flow meter apparatus.
   b. Successfully completed 1,000,000 cycles test in accordance with:
      1) AAMA 920-03 – Specification for Operating Cycle Performance of Side-Hinged Exterior Door Systems.
      2) ANSI A250.4-2001 – Test Procedure and Acceptance Criteria for Physical Endurance for Steel Doors, Frames, Frame Anchors and Hardware Reinforcings.
      3) NWWDA TM-7 Test Method to Determine the Physical Endurance of Wood Doors and Associated Hardware Under Accelerated Operating Conditions.
2. Laminate Properties
   a. Door face plate is a minimum of 0.125 inch thick fiberglass reinforced plastic molded into one continuous sheet starting with a 25 mil resin-rich gelcoat layer resin integrally molded with multiple layers of 1.5 oz. sq ft fiberglass mat and one layer of 18 oz per square yard fiberglass woven roving saturated with special resin. Door plate weight shall not be less than 0.97 lbs per square foot at a ratio of 30/70 glass resin.
   b. Laminated plate by itself evaluated in accordance with Florida Building Code TAS 201 Large Missile Impact Test as per ASTM-1996-05b, Standard Specification for Performance of Exterior Windows, Curtain Wall, Doors and Storm Shutters Impacted by Windborne Debris in Hurricanes. The missile (a 2 x 4 with a weight of 9 lbs shot from a cannon at a velocity of 50 ft/sec) did not penetrate the door face plate.
      1) ASTM D 638 Tensile Strength Properties of Plastic
      2) ASTM D 790 Flexural Strength Properties of Plastic

NOT FOR BIDDING

3) ASTM D 2583 Indention Hardness of Plastics
4) ASTM D 256 Izod Pendulum Impact Resistance
5) ASTM D 792 Density/Specific Gravity Of Plastics
6) ASTM D 1761 Mechanical Properties of Fasteners
7) ASTM E 84 Surface Burning Characteristics of Materials
8) ASTM G 155 Xenon Light Exposure of Non Metallic Materials
9) ASTM D 635 Method For Rate of Burning
10) ASTM D 2843 Smoke Density
11) ASTM D 1929 SELF IGNITION TEMPERATURE PROPERTIES
12) SFBC PA 201 IMPACT PROCEDURES FOR LARGE MISSILE IMPACT

c. Core Properties
1) ASTM C 177 Thermal Properties of Materials
2) ASTM D 1622 Density and Specific Gravity
3) ASTM E 84 Surface Burning Characteristics of Materials
4) WDMA TM-10 and TM-5 Firestop ASTM E 152 U.L 10(b)
5) ASTM E90-04- Sound Transmission Loss
6) ASTM E413-04- Classification for Rating Sound Insulation
7) ASTM E1332-90- Standard Classification for Determination of Outdoor-Indoor Transmission Class
8) ASTM E2235-04- Standard Test for Determination of Decay Rates for Use in Sound Insulation Methods

D. Qualifications

1. Manufacturer Qualifications: A company specialized in the manufacture of fiberglass reinforced plastic (FRP) doors and frames as specified herein with a minimum of 30 years documented experience and with a record of successful in-service performance for the applications as required for this project.
2. Installer Qualifications: An experienced installer who has completed fiberglass door and frame installations similar in material, design, and extent to those indicated and whose work has resulted in construction with a record of successful in-service performance.
3. Source limitations: Obtain fiberglass reinforced plastic doors and resin transfer molded fiberglass frames through one source fabricated from a single manufacturer, including fire rated fiberglass frames. This ensures complete uniformity of physical properties and consistency in the resin chemistry tailored for this application.
4. Source limitations: Hardware and accessories for all FRP doors as specified in Section 087111 shall be provided and installed by the fiberglass door and frame manufacturer.
5. Source Limitations: Glass for windows in doors shall be furnished and installed by door and frame manufacturer in accordance with related section, Division 8, Glazing.

E. Preinstallation Conference: Conduct conference at Project site.

1.6 DELIVERY, STORAGE, AND HANDLING

A. Comply with requirements of referenced standard and manufacturer's written instructions.

B. Package doors individually in cardboard cartons.

C. Each crate shall contain all fasteners necessary for installation as well as complete installation instructions

NOT FOR BIDDING

D. Mark each door on top and bottom rail with opening number used on Shop Drawings.

1.7 PROJECT CONDITIONS

A. Environmental Limitations: Do not deliver or install doors until spaces are enclosed and weathertight, wet work in spaces is complete and dry, and HVAC system is operating and maintaining ambient temperature and humidity conditions at occupancy levels during the remainder of the construction period.

B. Environmental Limitations: Do not deliver or install doors until spaces are enclosed and weathertight, wet work in spaces is complete and dry, and HVAC system is operating and maintaining temperature between 60 and 90 deg F (16 and 32 deg C) and relative humidity between 43 and 70 percent during the remainder of the construction period.

1.8 WARRANTY

A. Special Warranty: Manufacturer's standard form in which manufacturer agrees to repair or replace doors that fail in materials or workmanship within specified warranty period.

1. Warranty Period for fiberglass doors and frames: 25 years from date of Substantial Completion.

PART 2 - PRODUCTS

2.1 MANUFACTURERS

A. Basis-of-Design Product: Subject to compliance with requirements, provide Chem-Pruf or comparable product.

1. CECO Door Products.
2. Curries Company.
3. Special-Lite.

2.2 DOOR CONSTRUCTION, GENERAL

A. Low-Emitting Materials: Fabricate doors with adhesives and composite wood products that do not contain urea formaldehyde.

2.3 FIBERGLASS REINFORCED PLASTIC DOORS

A. Doors shall be made of fiberglass reinforced plastic (FRP) using Class 1 premium resin with no fillers that is specifically tailored to resist chemicals and contaminants typically found in environment for which these specifications are written. Doors shall be 1 ¾ inch thick and of flush construction, having no seams or cracks. For consistency in the resin chemistry tailored for this application and to maintain the same physical properties throughout the structure, all fiberglass components including face plates, stiles and rails and frames must be fabricated by

NOT FOR BIDDING

the same manufacturer. Components obtained through various outside sources for plant assembly will not be accepted.

B. Door Plates shall be 0.125 inch thick minimum, molded in one continuous piece, starting with 25 mil gelcoat of the color specified, integrally molded with multiple layers of 1.5 ounces per square foot fiberglass mat and one layer of 18 ounce per square yard fiberglass woven roving. Each layer shall be individually laminated with resin as mentioned above. Door plate weight shall not be less than 0.97 lbs per square foot at a ratio of 30/70 glass to resin. Plate alone to withstand Large Missile Impact per FBC TAS 201. Face plates manufactured using the pultrusion process does not allow for a smooth molded gelcoat finish, the use of woven roving for adequate plate thickness, strength and weight, or the appropriate glass to resin ratio and will not meet the quality standards of this project.

C. Stiles and Rails shall be constructed starting from the outside toward the inside, with a matrix of at least three layers of 1.5 ounce per square foot of fiberglass mat. The stile and rail shall be molded in one continuous piece to a U-shaped configuration and to the exact dimensions of the door. In this manner there will be no miter joints and dispara materials used to form the one-piece stile and rail.

D. Core material shall be Polypropylene plastic honeycomb core with a non woven polyester veil for unparalleled plate bonding, 180 PSI typical compression range unless otherwise requested.

E. Internal Reinforcement shall be #2 SPF of sufficient amount to adequately support required hardware and function of same.

F. Finish of door frame shall be identical with 25 mil resin-rich gelcoat of the specified color integrally molded in at time of manufacture resulting in a smooth gloss surface that is dense and non-porous. To achieve optimum surface characteristics, the gelcoat shall be cured within a temperature range of 120F to 170F creating an impermeable outer surface, uniform color throughout, and a permanent homogeneous bond with the resin/fiberglass substrate beneath. Only the highest quality gelcoat will be used to ensure enduring color and physical properties. Paint and/or post application of gelcoat results in poor mechanical fusion and will be deemed unacceptable for this application. The finish of the door and frame must be field repairable without compromising the integrity of the original uniform composite structure, function or physical strength.

G. Window openings shall be provided for at time of manufacture and shall be completely sealed so that the interior of the door is not exposed to the environment. Fiberglass retainers, which hold the glazing in place, shall be resin transfer molded with a profile that drains away from glazing. The window retainer must match the color and finish of the door plates with 25 mil of resin-rich gelcoat integrally molded in at time of manufacture. Mechanical fasteners shall not be used to attach retainers. Glass, as specified herein, shall be furnished and installed by door and frame manufacturer. In order to maintain uniform appearance, product longevity and the corrosion resistance this application requires, window retainers fabricated from Metal, PVC or Vinyl will not be accepted.

H. Louver openings shall be completely sealed so that the interior of the door is not exposed to the environment. Louvers are to be solid fiberglass "V" Vanes and shall match the color and finish of the door plates.

NOT FOR BIDDING

I. Transoms shall be identical to the doors in finish, construction, materials, thickness and reinforcement.

2.4 FIBERGLASS RESIN TRANSFER MOLDED DOOR FRAMES

A. Frames (rated and non-rated) shall be fiberglass and manufactured using the resin transfer method creating one solid piece (no voids) with complete uniformity in color and size. Beginning with a minimum 25 mil gelcoat layer molded in and a minimum of two layers of continuous strand fiberglass mat saturated with resin, the frame will be of one-piece construction with molded stop. All frame profiles shall have a core material of 2 psf polyurethane foam. Metal frames or pultruded fiberglass frames will not be accepted.

B. Finish of frame shall be identical to the door with 25 mil resin rich gelcoat of the specified color integrally molded in at time of manufacture. To achieve optimum surface characteristics, the gelcoat shall be cured within a temperature range of 120F to 170F creating an impermeable outer surface, uniform color throughout, and a permanent homogeneous bond with the resin/fiberglass substrate beneath. Only the highest quality gelcoat will be used to ensure enduring color and physical properties. Paint and/or post application of gelcoat result in poor mechanical fusion and will be deemed unacceptable for this application. The finish of the door and frame must be field repairable without compromising the integrity of the original uniform composite structure, function or physical strength.

C. Jamb/Header connection shall be mitered for tight fit.

D. Internal Reinforcement shall be continuous within the structure to allow for mounting of specified hardware. Reinforcing material shall be a dense matrix of cloth glass fibers and premium resin with a minimum hinge screw holding value of 1000 lbs per screw. All reinforcing materials shall be completely encapsulated. Documented strength of frame screw holding value after third insert must be submitted. Dissimilar materials, such as steel, will be deemed unacceptable as reinforcement for hardware attachment.

E. Mortises for hardware shall be accurately machined by CNC to hold dimensions to +/- 0.010 inch in all three axis.

F. Hinge pockets shall be accurately machined by CNC to facilitate heavy duty hinges at all hinge locations, using shims when standard weight hinges are used.

2.5 HARDWARE

A. See Section 087111

B. The special nature of this material requires that all related hardware as specified must be furnished and installed by the door frame manufacturer to maintain product quality and function as well as to ensure sufficient support/reinforcement, precision tooling and proper sealing methods are provided.

NOT FOR BIDDING

2.6 FABRICATION

A. Factory fit doors to suit frame-opening sizes indicated. Comply with clearance requirements of referenced quality standard for fitting unless otherwise indicated.

B. Transom and Side Panels: Fabricate matching panels with same construction, exposed surfaces, and finish as specified for associated doors. Finish bottom edges of transoms and top edges of rabbeted doors same as door stiles.

C. Openings: Cut and trim openings through doors in factory.

1. Light Openings: Trim openings with moldings of material and profile indicated.
2. Glazing: Factory install glazing in doors indicated to be factory finished. Comply with applicable requirements in Division 08 Section "Glazing."
3. Louvers: Factory install louvers in prepared openings.

2.7 FACTORY FINISHING

A. General: Comply with referenced quality standard for factory finishing. Complete fabrication, including fitting doors for openings and machining for hardware that is not surface applied, before finishing.

1. Finish faces, all four edges, edges of cutouts, and mortises.

B. Finish doors at factory.

PART 3 - EXECUTION

3.1 EXAMINATION

A. Examine doors and installed door frames before hanging doors.

1. Verify that frames comply with indicated requirements for type, size, location, and swing characteristics and have been installed with level heads and plumb jambs.
2. Reject doors with defects.

B. Proceed with installation only after unsatisfactory conditions have been corrected.

3.2 INSTALLATION

A. Hardware: For installation, see Division 08 Section "Door Hardware."

B. Installation Instructions: Install doors to comply with manufacturer's written instructions and the referenced quality standard, and as indicated.

1. Install fire-rated doors in corresponding fire-rated frames according to NFPA 80.

NOT FOR BIDDING

C. Job-Fitted Doors: Align and fit doors in frames with uniform clearances and bevels as indicated below; do not trim stiles and rails in excess of limits set by manufacturer or permitted for fire-rated doors. Machine doors for hardware. Seal edges of doors, edges of cutouts, and mortises after fitting and machining.

1. Clearances: Provide 1/8 inch (3.2 mm) at heads, jambs, and between pairs of doors. Provide 1/8 inch (3.2 mm) from bottom of door to top of decorative floor finish or covering unless otherwise indicated. Where threshold is shown or scheduled, provide 1/4 inch (6.4 mm) from bottom of door to top of threshold unless otherwise indicated.

D. Factory-Fitted Doors: Align in frames for uniform clearance at each edge.

E. Factory-Finished Doors: Restore finish before installation if fitting or machining is required at Project site.

3.3 ADJUSTING

A. Operation: Rehang or replace doors that do not swing or operate freely.

B. Finished Doors: Replace doors that are damaged or that do not comply with requirements. Doors may be repaired or refinished if work complies with requirements and shows no evidence of repair or refinishing.

END OF SECTION 081416

NOT FOR BIDDING

SECTION 083323 - OVERHEAD COILING DOORS

PART 1 - GENERAL

1.1 RELATED DOCUMENTS

A. Drawings and general provisions of the Contract, including General and Supplementary Conditions and Division 01 Specification Sections, apply to this section.

1.2 SUMMARY

A. Section Includes:

1. Service doors.

B. Related Requirements:

1. Section 055000 "Metal Fabrications" for miscellaneous steel supports.

1.3 ACTION SUBMITTALS

A. Product Data: For each type and size of overhead coiling door and accessory.

1. Include construction details, material descriptions, dimensions of individual components, profiles for slats, and finishes.
2. Include rated capacities, operating characteristics, electrical characteristics, and furnished accessories.
3. Include description of automatic closing device and testing and resetting instructions.

B. Shop Drawings: For each installation and for special components not dimensioned or detailed in manufacturer's product data.

1. Include plans, elevations, sections, and mounting details.
2. Include details of equipment assemblies, and indicate dimensions, required clearances, method of field assembly, components, and location and size of each field connection.
3. Include points of attachment and their corresponding static and dynamic loads imposed on structure.
4. For exterior components, include details of provisions for assembly expansion and contraction and for excluding and draining moisture to the exterior.
5. Show locations of controls, locking devices, and other accessories.
6. Include diagrams for power, signal, and control wiring.

C. Samples for Initial Selection: Manufacturer's finish charts showing full range of colors and textures available for units with factory-applied finishes.

1. Include similar Samples of accessories involving color selection.

NOT FOR BIDDING

D. Samples for Verification: For each type of exposed finish on the following components, in manufacturer's standard sizes:

1. Curtain slats.
2. Bottom bar.
3. Guides.
4. Brackets.
5. Hood.
6. Locking device(s).
7. Include similar Samples of accessories involving color selection.

1.4 INFORMATIONAL SUBMITTALS

A. Qualification Data: For Installer.

B. Oversize Construction Certification: For door assemblies required to be fire-rated and that exceed size limitations of labeled assemblies.

1.5 CLOSEOUT SUBMITTALS

A. Maintenance Data: For overhead coiling doors to include in maintenance manuals.

1.6 QUALITY ASSURANCE

A. Installer Qualifications: An entity that employs installers and supervisors who are trained and approved by manufacturer for both installation and maintenance of units required for this Project.

1. Maintenance Proximity: Not more than two hours' normal travel time from Installer's place of business to Project site.

B. Regulatory Requirements: Comply with applicable provisions in the U.S. Architectural & Transportation Barriers Compliance Board's ADA-ABA Accessibility Guidelines, ICC A117.1, and the Delaware Architectural Accessibility Standards.

PART 2 - PRODUCTS

2.1 MANUFACTURERS, GENERAL

A. Source Limitations: Obtain overhead coiling doors from single source from single manufacturer.

1. Obtain operators and controls from overhead coiling door manufacturer.

NOT FOR BIDDING

2.2 PERFORMANCE REQUIREMENTS

A. Structural Performance, Exterior Doors: Capable of withstanding the design wind loads.

1. Design Wind Load: As indicated on Drawings.
2. Testing: According to ASTM E 330.
3. Deflection Limits: Design overhead coiling doors to withstand design wind load without evidencing permanent deformation or disengagement of door components.
4. Operability under Wind Load: Design overhead coiling doors to remain operable under design wind load, acting inward and outward.

B. Seismic Performance: Overhead coiling doors shall withstand the effects of earthquake motions determined according to ASCE/SEI 7.

2.3 DOOR ASSEMBLY

A. Service Door: Overhead coiling door formed with curtain of interlocking metal slats.

1. Manufacturers: Subject to compliance with requirements, [provide products by the following] [provide products by one of the following] [available manufacturers offering products that may be incorporated into the work include, but are not limited to, the following]:

a. ACME Rolling Doors.
b. Alpine Overhead Doors, Inc.
c. Alumatec Pacific Products.
d. Amarr Garage Doors.
e. ASTA Door Corporation.
f. C.H.I. Overhead Doors, Inc.
g. City-Gates.
h. Clopay Building Products.
i. Cookson Company.
j. Cornell Iron Works, Inc.
k. Dynamic Closures Corporation.
l. Janus International Corporation.
m. Lawrence Roll-Up Doors, Inc.
n. McKeon Rolling Steel Door Company, Inc.
o. Metro Door.
p. Overhead Door Corporation.
q. QMI Security Solutions.
r. Raynor.
s. Southwestern Rolling Steel Door Co.
t. Wayne-Dalton Corp.
u. Windsor Door.

B. Operation Cycles: Door components and operators capable of operating for not less than 20,000. One operation cycle is complete when a door is opened from the closed position to the fully open position and returned to the closed position.

NOT FOR BIDDING

C. Air Infiltration: Maximum rate of 0.08 cfm/sq. ft. (0.406 L/s per sq. m) at 15 and 25 mph (24.1 and 40.2 km/h) when tested according to ASTM E 283.

D. STC Rating: 26.

E. Curtain R-Value: 4.5 deg F x h x sq. ft./Btu (0.792 K x sq. m/W.

F. Door Curtain Material: Aluminum.

G. Door Curtain Slats: Curved profile slats of 1-7/8-inch (48-mm) center-to-center height.

H. Bottom Bar: Two angles, each not less than 1-1/2 by 1-1/2 by 1/8 inch (38 by 38 by 3 mm) thick; fabricated from aluminum extrusions and finished to match door.

I. Curtain Jamb Guides: Aluminum with exposed finish matching curtain slats.

J. Hood: Match curtain material and finish

1. Shape: Round or Square.
2. Mounting: Face of wall.

K. Locking Devices: Equip door with locking device assembly.

1. Locking Device Assembly: Single jamb side locking bars, operable from inside with thumb turn and outside with cylinder.

L. Manual Door Operator: Push-up operation.

M. Curtain Accessories: Equip door with weatherseals, push/pull handles and pull-down strap.

N. Door Finish:

1. Baked-Enamel or Powder-Coated Finish: Color as selected by Architect from manufacturer's full range.
2. Interior Curtain-Slat Facing: Match finish of exterior curtain-slat face.

2.4 DOOR CURTAIN MATERIALS AND CONSTRUCTION

A. Door Curtains: Fabricate overhead coiling-door curtain of interlocking metal slats, designed to withstand wind loading indicated, in a continuous length for width of door without splices. Unless otherwise indicated, provide slats of thickness and mechanical properties recommended by door manufacturer for performance, size, and type of door indicated, and as follows:

1. Aluminum Door Curtain Slats: ASTM B 209 (ASTM B 209M) sheet or ASTM B 221 (ASTM B 221M) extrusions, alloy and temper standard with manufacturer for type of use and finish indicated; thickness of 0.050 inch (1.27 mm); and as required.

B. Curtain Jamb Guides: Manufacturer's standard angles or channels and angles of same material and finish as curtain slats unless otherwise indicated, with sufficient depth and strength to retain curtain, to allow curtain to operate smoothly, and to withstand loading. Slot bolt holes for guide adjustment. Provide removable stops on guides to prevent overtravel of curtain.

NOT FOR BIDDING

2.5 HOODS

A. General: Form sheet metal hood to entirely enclose coiled curtain and operating mechanism at opening head. Contour to fit end brackets to which hood is attached. Roll and reinforce top and bottom edges for stiffness. Form closed ends for surface-mounted hoods and fascia for any portion of between-jamb mounting that projects beyond wall face. Equip hood with intermediate support brackets as required to prevent sagging.

1. Aluminum: 0.040-inch- (1.02-mm-) thick aluminum sheet complying with ASTM B 209 (ASTM B 209M), of alloy and temper recommended by manufacturer and finisher for type of use and finish indicated.

2.6 LOCKING DEVICES

A. Locking Device Assembly: Fabricate with cylinder lock, spring-loaded dead bolt, operating handle, cam plate, and adjustable locking bars to engage through slots in tracks.

1. Lock Cylinders: Cylinders specified in Section 08710 "Door Hardware.

2.7 CURTAIN ACCESSORIES

A. Weatherseals for Exterior Doors: Equip each exterior door with weather-stripping gaskets fitted to entire exterior perimeter of door for a weather-resistant installation unless otherwise indicated.

1. At door head, use 1/8-inch (3-mm-) thick, replaceable, continuous-sheet baffle secured to inside of hood or field- installed on the header.
2. At door jambs, use replaceable, adjustable, continuous, nylon brushes.

B. Push/Pull Handles: Equip each push up-operated or emergency-operated door with lifting handles on each side of door, finished to match door.

C. Pull-Down Strap: Provide pull-down straps for doors more than 84 inches (2130 mm) high.

2.8 COUNTERBALANCING MECHANISM

A. General: Counterbalance doors by means of manufacturer's standard mechanism with an adjustable-tension, steel helical torsion spring mounted around a steel shaft and contained in a spring barrel connected to top of curtain with barrel rings. Use grease-sealed bearings or self-lubricating graphite bearings for rotating members.

B. Counterbalance Barrel: Fabricate spring barrel of manufacturer's standard hot-formed, structural-quality, seamless or welded carbon-steel pipe, of sufficient diameter and wall thickness to support rolled-up curtain without distortion of slats and to limit barrel deflection to not more than 0.03 in./ft. (2.5 mm/m) of span under full load.

C. Counterbalance Spring: One or more oil-tempered, heat-treated steel helical torsion springs. Size springs to counterbalance weight of curtain, with uniform adjustment accessible from outside barrel. Secure ends of springs to barrel and shaft with cast-steel barrel plugs.

NOT FOR BIDDING

1. Fire-Rated Doors: Equip with auxiliary counterbalance spring and prevent tension release from main counterbalance spring when automatic closing device operates.

D. Torsion Rod for Counterbalance Shaft: Fabricate of manufacturer's standard cold-rolled steel, sized to hold fixed spring ends and carry torsional load.

E. Brackets: Manufacturer's standard mounting brackets of either cast iron or cold-rolled steel plate.

2.9 MANUAL DOOR OPERATORS

A. General: Equip door with manual door operator by door manufacturer.

B. Push-up Door Operation: Lift handles and pull ropes for raising and lowering doors, with counterbalance mechanism designed so that required lift or pull for door operation does not exceed 25 lbf (111 N).

2.10 GENERAL FINISH REQUIREMENTS

A. Comply with NAAMM/NOMMA's "Metal Finishes Manual for Architectural and Metal Products (AMP 500-06)" for recommendations for applying and designating finishes.

B. Appearance of Finished Work: Noticeable variations in same piece are not acceptable. Variations in appearance of adjoining components are acceptable if they are within the range of approved Samples and are assembled or installed to minimize contrast.

2.11 ALUMINUM FINISHES

A. Baked-Enamel or Powder-Coat Finish: AAMA 2603. Comply with coating manufacturer's written instructions for cleaning, conversion coating, application, and baking.

2.12 STEEL AND GALVANIZED-STEEL FINISHES

A. Baked-Enamel or Powder-Coat Finish: Manufacturer's standard baked-on finish consisting of prime coat and thermosetting topcoat. Comply with coating manufacturer's written instructions for cleaning, pretreatment, application, and minimum dry film thickness.

PART 3 - EXECUTION

3.1 EXAMINATION

A. Examine substrates areas and conditions, with Installer present, for compliance with requirements for substrate construction and other conditions affecting performance of the Work.

B. Examine locations of electrical connections.

NOT FOR BIDDING

C. Proceed with installation only after unsatisfactory conditions have been corrected.

3.2 INSTALLATION

A. Install overhead coiling doors and operating equipment complete with necessary hardware, anchors, inserts, hangers, and equipment supports; according to manufacturer's written instructions and as specified.

B. Install overhead coiling doors, hoods, controls, and operators at the mounting locations indicated for each door.

C. Accessibility: Install overhead coiling doors, switches, and controls along accessible routes in compliance with regulatory requirements for accessibility.

3.3 STARTUP SERVICE

A. Engage a factory-authorized service representative to perform startup service.

1. Perform installation and startup checks according to manufacturer's written instructions.
2. Test and adjust controls and safety devices. Replace damaged and malfunctioning controls and equipment.
3. Test door closing when activated by detector or alarm-connected fire-release system. Reset door-closing mechanism after successful test.

3.4 ADJUSTING

A. Adjust hardware and moving parts to function smoothly so that doors operate easily, free of warp, twist, or distortion.

1. Adjust exterior doors and components to be weather-resistant.

B. Lubricate bearings and sliding parts as recommended by manufacturer.

C. Adjust seals to provide tight fit around entire perimeter.

3.5 DEMONSTRATION

A. Engage a factory-authorized service representative to train Owner's maintenance personnel to adjust, operate, and maintain overhead coiling doors.

END OF SECTION 083323

NOT FOR BIDDING

(PAGE LEFT BLANK)

NOT FOR BIDDING

SECTION 083613 - SECTIONAL DOORS

PART 1 - GENERAL

1.1 RELATED DOCUMENTS

A. Drawings and general provisions of the Contract, including General and Supplementary Conditions and Division 01 Specification Sections, apply to this section.

1.2 SUMMARY

A. Section includes manually operated sectional doors.

B. Related Requirements:

1. Section 055000 "Metal Fabrications" for miscellaneous steel supports.

1.3 ACTION SUBMITTALS

A. Product Data: For each type and size of sectional door and accessory.

1. Include construction details, material descriptions, dimensions of individual components, profile door sections, and finishes.
2. Include rated capacities, operating characteristics, electrical characteristics, and furnished accessories.

B. Shop Drawings: For each installation and for special components not dimensioned or detailed in manufacturer's product data.

1. Include plans, elevations, sections, and mounting details.
2. Include details of equipment assemblies. Indicate dimensions, required clearances, method of field assembly, components, and location and size of each field connection.
3. Include points of attachment and their corresponding static and dynamic loads imposed on structure.

C. Samples for Initial Selection: For units with factory-applied finishes.

1. Include Samples of accessories involving color selection.

D. Samples for Verification: For each type of exposed finish on the following components, in manufacturer's standard sizes:

1. Flat door sections.

NOT FOR BIDDING

1.4 INFORMATIONAL SUBMITTALS

A. Qualification Data: For Installer.

B. Sample Warranties: For special warranties.

1.5 CLOSEOUT SUBMITTALS

A. Maintenance Data: For sectional doors to include in maintenance manual.

1.6 QUALITY ASSURANCE

A. Installer Qualifications: An entity that employs installers and supervisors who are trained and approved by manufacturer for both installation and maintenance of units required for this Project.

B. Regulatory Requirements: Comply with applicable provisions in the U.S. Architectural & Transportation Barriers Compliance Board's ADA-ABA Accessibility Guidelines, ICC A117.1, and the Delaware Architectural Accessibility Standards.

1.7 WARRANTY

A. Special Warranty: Manufacturer agrees to repair or replace components of sectional doors that fail in materials or workmanship within specified warranty period.

1. Failures include, but are not limited to, the following:

a. Structural failures including, but not limited to, excessive deflection.
b. Failure of components or operators before reaching required number of operation cycles.
c. Faulty operation of hardware.
d. Deterioration of metals, metal finishes, and other materials beyond normal weathering and use; rust through.
e. Delamination of exterior or interior facing materials.

2. Warranty Period: Five years from date of Substantial Completion.

B. Special Finish Warranty: Manufacturer agrees to repair or replace components that show evidence of deterioration of factory-applied finishes within specified warranty period.

1. Warranty Period: 10 years from date of Substantial Completion.

PART 2 - PRODUCTS

2.1 MANUFACTURERS, GENERAL

A. Source Limitations: Obtain sectional doors from single source from single manufacturer.

NOT FOR BIDDING

1. Obtain operators and controls from sectional door manufacturer.

2.2 PERFORMANCE REQUIREMENTS

A. General Performance: Sectional doors shall comply with performance requirements specified without failure due to defective manufacture, fabrication, installation, or other defects in construction.

B. Structural Performance, Exterior Doors: Capable of withstanding the design wind loads.

1. Design Wind Load: As indicated on Drawings.
2. Testing: According to ASTM E 330.
3. Deflection Limits: Design sectional doors to withstand design wind loads without evidencing permanent deformation or disengagement of door components.

   a. Deflection of door sections in horizontal position (open) shall not exceed 1/120 of the door width.
   b. Deflection of horizontal track assembly shall not exceed 1/240 of the door height.

4. Operability under Wind Load: Design overhead coiling doors to remain operable under design wind load, acting inward and outward.

C. Seismic Performance: Sectional doors shall withstand the effects of earthquake motions determined according to ASCE/SEI 7.

2.3 DOOR ASSEMBLY

A. Aluminum Sectional Door: Sectional door formed with hinged sections and fabricated according to DASMA 102 unless otherwise indicated.

1. Manufacturers: Subject to compliance with requirements, [provide products by the following provider products by one of the following] [available manufacturers offering products that may be incorporated into the Work include, but are not limited to, the following:

   a. Amarr Garage Doors.
   b. Arrow-Knight.
   c. C.H.I. Overhead Doors, Inc.
   d. Clopay Building Products.
   e. Fimbel Architectural Door Specialties.
   f. Haas Door.
   g. Hörmann LLC.
   h. Martin Door Manufacturing.
   i. Overhead Door Corporation.
   j. Raynor.
   k. Rite-Hite Corporation.
   l. Wayne-Dalton Corp.
   m. Windsor Door.

NOT FOR BIDDING

B. Operation Cycles: Door components and operators capable of operating for not less than 20,000. One operation cycle is complete when a door is opened from the closed position to the fully open position and returned to the closed position.

C. Air Infiltration: Maximum rate of 0.08 cfm/sq. ft. (0.406 L/s per sq. m) at 15 and 25 mph (24.1 and 40.2 km/h) when tested according to ASTM E 283.

D. R-Value: 4.5 deg F x h x sq. ft./Btu (0.792 K x sq. m/W).

E. Aluminum Sections: Solid panels.

F. Track Configuration: Low-headroom track.

G. Weatherseals: Fitted to bottom and top and around entire perimeter of door

H. Roller-Tire Material: Manufacturer's standard.

I. Locking Devices: Equip door with locking device assembly

1. Locking Device Assembly: Single-jamb side locking bars, operable from inside with thumbturn and outside with cylinder.

J. Counterbalance Type: Torsion spring.

K. Manual Door Operator: Push-up operation.

L. Door Finish:

1. Baked-Enamel or Powder-Coat Finish: Color and gloss as selected by Architect from manufacturer's full range.
2. Finish of Interior Facing Material: Match finish of exterior section face.

2.4 ALUMINUM DOOR SECTIONS

A. Sections: Extruded-aluminum stile and rail members with dimensions and profiles as indicated on Drawings; members joined by welding or with concealed, 1/4-inch- (6-mm-) minimum diameter, aluminum or nonmagnetic stainless-steel through bolts, full height of door section; and with meeting rails shaped to provide a weather-resistant seal.

1. Aluminum: ASTM B 221 (ASTM B 221M) extrusions, alloy and temper standard with manufacturer for type of use and finish indicated; minimum thickness 0.065 inch (1.7 mm) for door section 1-3/4 inches (44 mm) deep, and as required to comply with requirements.
2. Reinforce sections with continuous horizontal and diagonal reinforcement, as required to stiffen door and for wind loading.
3. Provide reinforcement for hardware attachment.

B. Solid Panels: Aluminum sheet, complying with ASTM B 209 (ASTM B 209M), alloy and temper standard with manufacturer for type of use and finish indicated, not less than 0.040 inch (1.02 mm) thick, set in continuous vinyl channel retained with rigid, snap-in, extruded-vinyl moldings or with rubber or neoprene glazing gasket with aluminum stop.

NOT FOR BIDDING

2.5 TRACKS, SUPPORTS, AND ACCESSORIES

A. Tracks: Manufacturer's standard, galvanized-steel track system of configuration indicated, sized for door size and weight, designed for lift type indicated and clearances indicated on Drawings, Provide complete system including brackets, bracing, and reinforcement to ensure rigid support of ball-bearing roller guides for required door type, size, weight, and loading.

1. Galvanized Steel: ASTM A 653/A 653M, minimum G60 (Z180) zinc coating.
2. Slope tracks at an angle from vertical or design tracks to ensure tight closure at jambs when door unit is closed.
3. Track Reinforcement and Supports: Galvanized-steel members to support track without sag, sway, and vibration during opening and closing of doors. Slot vertical sections of track spaced 2 inches (51 mm) apart for door-drop safety device.

   a. For Vertical Track: Continuous reinforcing angle attached to track and attached to wall with jamb brackets.
   b. For Horizontal Track: Continuous reinforcing angle from curve in track to end of track, attached to track and supported at points by laterally braced attachments to overhead structural members.

B. Weatherseals: Replaceable, adjustable, continuous, compressible weather-stripping gaskets of flexible vinyl, rubber, or neoprene and around entire perimeter of sectional door unless otherwise indicated.

2.6 HARDWARE

A. General: Heavy-duty, corrosion-resistant hardware, with hot-dip galvanized, stainless-steel, or other corrosion-resistant fasteners, to suit door type.

B. Hinges: Heavy-duty, galvanized-steel hinges of not less than 0.079-inch- (2.01-mm-) nominal coated thickness at each end stile and at each intermediate stile, according to manufacturer's written recommendations for door size. Attach hinges to door sections through stiles and rails with bolts and lock nuts or lock washers and nuts. Use rivets or self-tapping fasteners where access to nuts is impossible. Provide double-end hinges where required, for doors more than 16 feet (4.88 m) wide unless otherwise recommended by door manufacturer.

C. Rollers: Heavy-duty rollers with steel ball-bearings in case-hardened steel races, mounted with varying projections to suit slope of track. Extend roller shaft through both hinges where double hinges are required. Provide 3-inch- (76-mm-) diameter roller tires for 3-inch- (76-mm-) wide track and 2-inch- (51-mm-) diameter roller tires for 2-inch- (51-mm-) wide track.

D. Push/Pull Handles: Equip each push-up operated or emergency-operated door with galvanized-steel lifting handles on each side of door, finished to match door.

2.7 LOCKING DEVICES

A. Locking Device Assembly: Fabricate with cylinder lock, spring-loaded deadbolt, operating handle, cam plate, and adjustable locking bars to engage through slots in tracks.

NOT FOR BIDDING

1. Lock Cylinders: Cylinders specified in Section 087100 "Door Hardware.

2.8 COUNTERBALANCE MECHANISM

A. Torsion Spring: Counterbalance mechanism consisting of adjustable-tension torsion springs fabricated from steel-spring wire complying with ASTM A 229/A 229M, mounted on torsion shaft made of steel tube or solid steel. Provide springs designed for number of operation cycles indicated.

B. Weight Counterbalance: Counterbalance mechanism consisting of filled pipe weights that move vertically in a galvanized-steel weight pipe. Connect pipe weights with cable to weight-cable drums mounted on torsion shaft made of steel tube or solid steel.

C. Cable Drums and Shaft for Doors: Cast-aluminum or gray-iron casting cable drums mounted on torsion shaft and grooved to receive door-lifting cables as door is raised. Mount counterbalance mechanism with manufacturer's standard ball-bearing brackets at each end of torsion shaft. Provide one additional midpoint bracket for shafts up to 16 feet (4.88 m) long and two additional brackets at one-third points to support shafts more than 16 feet (4.88 m) long unless closer spacing is recommended by door manufacturer.

D. Cables: Galvanized-steel, multistrand, lifting cables with cable safety factor of at least 5 to 1.

E. Cable Safety Device: Include a spring-loaded steel or spring-loaded bronze cam mounted to bottom door roller assembly on each side and designed to automatically stop door if either lifting cable breaks.

F. Bracket: Provide anchor support brackets as required to connect stationary end of spring to the wall and to level the shaft and prevent sag.

G. Bumper: Provide spring bumper at each horizontal track to cushion door at end of opening operation.

2.9 MANUAL DOOR OPERATORS

A. General: Equip door with manual door operator by door manufacturer.

B. Push-up Operation: Lift handles and pull rope for raising and lowering doors, with counterbalance mechanism designed so that required lift or pull for door operation does not exceed 25 lbf (111 N).

2.10 GENERAL FINISH REQUIREMENTS

A. Comply with AAMM/NOMMA's "Metal Finishes Manual for Architectural and Metal Products (AMP 500-06)" for recommendations for applying and designating finishes.

B. Appearance of Finished Work: Noticeable variations in same piece are not acceptable. Variations in appearance of adjoining components are acceptable if they are within the range of approved Samples and are assembled or installed to minimize contrast.

NOT FOR BIDDING

2.11 ALUMINUM FINISHES

A. Baked-Enamel or Powder-Coat Finish: AAMA 2603. Comply with coating manufacturer's written instructions for cleaning, conversion coating, application, and baking.

PART 3 - EXECUTION

3.1 EXAMINATION

A. Examine substrates, areas, and conditions, with Installer present, for compliance with requirements for substrate construction and other conditions affecting performance of the Work.

B. Examine locations of electrical connections.

C. Proceed with installation only after unsatisfactory conditions have been corrected.

3.2 INSTALLATION

A. Install sectional doors and operating equipment complete with necessary hardware, anchors, inserts, hangers, and equipment supports; according to manufacturer's written instructions and as specified.

B. Tracks:

1. Fasten vertical track assembly to opening jambs and framing, spaced not more than 24 inches (610 mm) apart.
2. Hang horizontal track assembly from structural overhead framing with angles or channel hangers attached to framing by welding or bolting, or both. Provide sway bracing, diagonal bracing, and reinforcement as required for rigid installation of track and door-operating equipment.

C. Accessibility: Install sectional doors, switches, and controls along accessible routes in compliance with regulatory requirements for accessibility.

3.3 STARTUP SERVICES

A. Engage a factory authorized service representative to perform startup service.

1. Complete installation and startup checks according to manufacturer's written instructions.
2. Test and adjust controls and safety devices. Replace damaged and malfunctioning controls and equipment.

3.4 ADJUSTING

A. Adjust hardware and moving parts to function smoothly so that doors operate easily, free of warp, twist, or distortion.

NOT FOR BIDDING

B. Lubricate bearings and sliding parts as recommended by manufacturer.

C. Adjust doors and seals to provide weather-resistant fit around entire perimeter.

D. Touch-up Painting: Immediately after welding galvanized materials, clean welds and abraded galvanized surfaces and repair galvanizing to comply with ASTM A 780/A 780M.

3.5 DEMONSTRATION

A. Engage a factory-authorized service representative to train Owner's maintenance personnel to adjust, operate, and maintain sectional doors.

END OF SECTION 083613

NOT FOR BIDDING

SECTION 084113 - ALUMINUM-FRAMED ENTRANCES AND STOREFRONTS

PART 1 - GENERAL

1.1 RELATED DOCUMENTS

A. Drawings and general provisions of the Contract, including General and Supplementary Conditions and Division 01 Specification Sections, apply to this section.

1.2 SUMMARY

A. Section Includes:

1. Exterior and interior storefront framing.
2. Storefront framing for punched openings.
3. Exterior and interior manual-swing entrance doors and door-frame units.

1.3 PREINSTALLATION MEETINGS

A. Preinstallation Conference: Conduct conference at project site.

1.4 ACTION SUBMITTALS

A. Product Data: For each type of product.

1. Include construction details, material descriptions, dimensions of individual components and profiles, and finishes.

B. Shop Drawings: For aluminum-framed entrances and storefronts. Include plans, elevations, sections, full-size details, and attachments to other work.

1. Include details of provisions for assembly expansion and contraction and for draining moisture occurring within the assembly to the exterior.
2. Include full-size isometric details of each vertical-to-horizontal intersection of aluminum-framed entrances and storefronts, showing the following:

a. Joinery, including concealed welds.
b. Anchorage.
c. Expansion provisions.
d. Glazing.
e. Flashing and drainage.

3. Show connection to and continuity with adjacent thermal, weather, air, and vapor barriers.

C. Samples for Initial Selection: For units with factory-applied color finishes.

NOT FOR BIDDING

D. Samples for Verification: For each type of exposed finish required, in manufacturer's standard sizes.

E. Fabrication Sample: Of each vertical-to-horizontal intersection of assemblies, made from 12-inch (300-mm) lengths of full-size components and showing details of the following:

1. Joinery, including concealed welds.
2. Anchorage.
3. Expansion provisions.
4. Glazing.
5. Flashing and drainage.

F. Entrance Door Hardware Schedule: Prepared by or under supervision of supplier, detailing fabrication and assembly of entrance door hardware, as well as procedures and diagrams. Coordinate final entrance door hardware schedule with doors, frames, and related work to ensure proper size, thickness, hand, function, and finish of entrance door hardware.

G. Delegated-Design Submittal: For aluminum-framed entrances and storefronts indicated to comply with performance requirements and design criteria, including analysis data signed and sealed by the qualified professional engineer responsible for their preparation.

1.5 INFORMATIONAL SUBMITTALS

A. Preconstruction Laboratory Mockup Testing Submittals:

1. Testing Program: Developed specifically for Project.
2. Test Reports: Prepared by a qualified preconstruction testing agency for each mockup test.
3. Record Drawings: As-built drawings of preconstruction laboratory mockups showing changes made during preconstruction laboratory mockup testing.

B. Qualification Data: For Installer and field testing agency.

C. Energy Performance Certificates: For aluminum-framed entrances and storefronts, accessories, and components, from manufacturer.

1. Basis for Certification: NFRC-certified energy performance values for each aluminum-framed entrance and storefront.

D. Product Test Reports: For aluminum-framed entrances and storefronts, for tests performed by manufacturer and witnessed by a qualified testing agency.

E. Quality-Control Program: Developed specifically for Project, including fabrication and installation, according to recommendations in ASTM C 1401. Include periodic quality-control reports.

F. Source quality-control reports.

G. Field quality-control reports.

H. Sample Warranties: For special warranties.

NOT FOR BIDDING

1.6 CLOSEOUT SUBMITTALS

A. Maintenance Data: For aluminum-framed entrances and storefronts to include in maintenance manuals.

B. Maintenance Data for Structural Sealant: For structural-sealant-glazed storefront to include in maintenance manuals. Include ASTM C 1401 recommendations for post-installation-phase quality-control program.

1.7 QUALITY ASSURANCE

A. Installer Qualifications: An entity that employs installers and supervisors who are trained and approved by manufacturer.

B. Testing Agency Qualifications: Qualified according to ASTM E 699 for testing indicated.

C. Product Options: Information on Drawings and in Specifications establishes requirements for aesthetic effects and performance characteristics of assemblies. Aesthetic effects are indicated by dimensions, arrangements, alignment, and profiles of components and assemblies as they relate to sightlines, to one another, and to adjoining construction.

1. Do not change intended aesthetic effects, as judged solely by Architect, except with Architect's approval. If changes are proposed, submit comprehensive explanatory data to Architect for review.

D. Structural-Sealant Glazing: Comply with ASTM C 1401 for design and installation of storefront systems.

1.8 WARRANTY

A. Special Warranty: Manufacturer agrees to repair or replace components of aluminum-framed entrances and storefronts that do not comply with requirements or that fail in materials or workmanship within specified warranty period.

1. Failures include, but are not limited to, the following:

a. Structural failures including, but not limited to, excessive deflection.
b. Noise or vibration created by wind and thermal and structural movements.
c. Deterioration of metals, metal finishes, and other materials beyond normal weathering.
d. Water penetration through fixed glazing and framing areas.
e. Failure of operating components.

2. Warranty period: 10 years from date of Substantial Completion.

B. Special Finish Warranty: Standard form in which manufacturer agrees to repair finishes or replace aluminum that shows evidence of deterioration of factory-applied finishes within specified warranty period.

1. Deterioration includes, but is not limited to, the following:

NOT FOR BIDDING

a. Color fading more than 5 Hunter units when tested according to ASTM D 2244.
b. Chalking in excess of a No. 8 rating when tested according to ASTM D 4214.
c. Cracking, checking, peeling, or failure of paint to adhere to bare metal.

2. Warranty Period: 20 years from date of Substantial Completion.

PART 2 - PRODUCTS

2.1 PERFORMANCE REQUIREMENTS

A. Delegated Design: Engage a qualified professional engineer, as defined in Section 014000 "Quality Requirements," to design aluminum-framed entrances and storefronts.

B. General Performance: Comply with performance requirements specified, as determined by testing of aluminum-framed entrances and storefronts representing those indicated for this Project without failure due to defective manufacture, fabrication, installation, or other defects in construction.

1. Aluminum-framed entrances and storefronts shall withstand movements of supporting structure including, but not limited to, story drift, twist, column shortening, long-term creep, and deflection from uniformly distributed and concentrated live loads.
2. Failure also includes the following:

a. Thermal stresses transferring to building structure.
b. Glass breakage.
c. Noise or vibration created by wind and thermal and structural movements.
d. Loosening or weakening of fasteners, attachments, and other components.
e. Failure of operating units.

C. Structural Loads:

1. Wind Loads: As indicated on Drawings.
2. Other Design Loads: As indicated on Drawings.

D. Deflection of Framing Members: At design wind pressure, as follows:

1. Deflection Normal to Wall Plane: Limited to edge of glass in a direction perpendicular to glass plane not exceeding 1/175 of the glass edge length for each individual glazing lite or an amount that restricts edge deflection of individual glazing lites to 3/4 inch (19.1 mm), whichever is less.
2. Deflection Parallel to Glazing Plane: Limited to 1/360 of clear span or 1/8 inch (3.2 mm), whichever is smaller.

3. Cantilever Deflection: Where framing members overhang an anchor point, as follows:

a. Perpendicular to Plane of Wall: No greater than 1/240 of clear span plus 1/4 inch (6.35 mm) for spans greater than 11 feet 8-1/4 inches (3.6 m) or 1/175 times span, for spans less than 11 feet 8-1/4 inches (3.6 m).

E. Structural: Test according to ASTM E 330 as follows:

NOT FOR BIDDING

1. When tested at positive and negative wind-load design pressures, assemblies do not evidence deflection exceeding specified limits.
2. When tested at 150 percent of positive and negative wind-load design pressures, assemblies, including anchorage, do not evidence material failures, structural distress, or permanent deformation of main framing members exceeding 0.2 percent of span.
3. Test Durations: As required by design wind velocity, but not less than 10 seconds.

F. Air Infiltration: Test according to ASTM E 283 for infiltration as follows:

1. Fixed Framing and Glass Area:

   a. Maximum air leakage of 0.06 cfm/sq. ft. (0.30 L/s per sq. m) at a static-air-pressure differential of 1.57 lbf/sq. ft. (75 Pa)] [6.24 lbf/sq. ft. (300 Pa).

2. Entrance Doors:

   a. Pair of Doors: Maximum air leakage of 1.0 cfm/sq. ft. (5.08 L/s per sq. m) at a static-air-pressure differential of 1.57 lbf/sq. ft. (75 Pa).
   b. Single Doors: Maximum air leakage of 0.5 cfm/sq. ft. (2.54 L/s per sq. m) static-air-pressure differential of 1.57 lbf/sq. ft. (75 Pa).

G. Water Penetration under Static Pressure: Test according to ASTM E 331 as follows:

1. No evidence of water penetration through fixed glazing and framing areas when tested according to a minimum static-air-pressure differential of 20 percent of positive wind-load design pressure, but not less than 6.24 lbf/sq. ft. (300 Pa).

H. Water Penetration under Dynamic Pressure: Test according to AAMA 501.1 as follows:

1. No evidence of water penetration through fixed glazing and framing areas when tested at dynamic pressure equal to 20 percent of positive wind-load design pressure, but not less than 6.24 lbf/sq. ft. (300 Pa).
2. Maximum Water Leakage: According to AAMA 501.1. Water leakage does not include water controlled by flashing and gutters, or water that is drained to exterior.

I. Interstory Drift: Accommodate design displacement of adjacent stories indicated.

1. Design Displacement: As indicated on Drawings.
2. Test Performance: Complying with criteria for passing based on building occupancy type when tested according to AAMA 501.4 at design displacement and 1.5 times the design displacement.

J. Seismic Performance: Aluminum-framed entrances and storefronts shall withstand the effects of earthquake motions determined according to ASCE/SEI 7.

1. Seismic Drift Causing Glass Fallout: Complying with criteria for passing based on building occupancy type when tested according to AAMA 501.6 at design displacement and 1.5 times the design displacement.
2. Vertical Interstory Movement: Complying with criteria for passing based on building occupancy type when tested according to AAMA 501.7 at design displacement and 1.5 times the design displacement.

NOT FOR BIDDING

K. Energy Performance: Certify and label energy performance according to NFRC as follows:

1. Thermal Transmittance (U-factor): Fixed glazing and framing areas shall have U-factor of not more than 0.57 Btu/sq. ft. x h x deg F (3.23 W/sq. m x K) as determined according to NFRC 100.
2. Solar Heat Gain Coefficient: Fixed glazing and framing areas shall have a solar heat gain coefficient of no greater than 0.40 as determined according to NFRC 200.
3. Condensation Resistance: Fixed glazing and framing areas shall have an NFRC-certified condensation resistance rating of no less than 35 as determined according to NFRC 500.

L. Noise Reduction: Test according to ASTM E 90, with ratings determined by ASTM E 1332, as follows.

1. Outdoor-Indoor Transmission Class: Minimum 30.

M. Windborne-Debris Impact Resistance: Pass missile-impact and cyclic-pressure tests when tested according to ASTM E 1886 and testing information in ASTM E 1996 for Wind Zone 2.

1. Large-Missile Test: For glazed openings located within 30 feet (9.1 m) of grade.

N. Thermal Movements: Allow for thermal movements resulting from ambient and surface temperature changes:

1. Temperature Change: 120 deg F (67 deg C) ambient; 180 deg F (100 deg C), material surfaces.
2. Thermal Cycling: No buckling; stress on glass; sealant failure; excess stress on framing, anchors, and fasteners; or reduction of performance when tested according to AAMA 501.5.

   a. High Exterior Ambient-Air Temperature: That which produces an exterior metal-surface temperature of 180 deg F (82 deg C).
   b. Low Exterior Ambient-Air Temperature: 0 deg F (minus 18 deg C).
   c. Interior Ambient-Air Temperature: 75 deg F (24 deg C).

O. Structural-Sealant Joints:

1. Designed to carry gravity loads of glazing.
2. Designed to produce tensile or shear stress of less than 20 psi (138 kPa).

P. Structural Sealant: Capable of withstanding tensile and shear stresses imposed by structural-sealant-glazed storefront system without failing adhesively or cohesively. When tested for preconstruction adhesion and compatibility, cohesive failure of sealant shall occur before adhesive failure.

1. Adhesive failure occurs when sealant pulls away from substrate cleanly, leaving no sealant material behind.
2. Cohesive failure occurs when sealant breaks or tears within itself but does not separate from each substrate because sealant-to-substrate bond strength exceeds sealant's internal strength.

NOT FOR BIDDING

2.2 MANUFACTURERS

A. Manufacturers: Subject to compliance with requirements, available manufacturers offering products that may be incorporated into the Work include, but are not limited to the following:

1. Arcadia, Inc.
2. CMI Architectural.
3. Commercial Architectural Products, Inc.
4. Coral Industries, Inc.
5. EFCO Corporation.
6. Kawneer North America; an Alcoa company.
7. Leed Himmel Industries, Inc.
8. Oldcastle BuildingEnvelope™.
9. Pittco Architectural Metals, Inc.
10. SAFTI FIRST Fire Rated Glazing Solutions.
11. TRACO.
12. Trulite Glass & Aluminum Solutions, LLC.
13. Tubelite Inc.
14. United States Aluminum.

B. Source Limitations: Obtain all components of aluminum-framed entrance and storefront system, including framing and accessories, from single manufacturer.

2.3 FRAMING

A. Exterior Storefront Framing System: Provide thermally broken storefront framing systems fabricated from extruded aluminum members of size and profile indicated. Include subframes and other reinforcing members of the type indicated. Shop-fabricate and preassemble frame components where possible. Provide storefront frame sections without exposed seams:

1. Equivalent to Kawneer Trifab VG 451 T framing system with multi-plane capability:

   a. Construction: Thermally broken.
   b. Glazing System: Retained mechanically with gaskets on four sides.
   c. Glazing Plane: Center.
   d. Finish: Clear anodic finish.

B. Interior Storefront Framing System: Provide storefront framing systems fabricated from extruded aluminum members of size and profile indicated. Include subframes and other reinforcing members of the type indicated. Shop-fabricate and preassemble frame components where possible. Provide storefront frame sections without exposed seams:

1. Equivalent to Kawneer Trifab VG 451 T framing system:

   a. Construction: Non-Thermally broken.
   b. Glazing System: Retained mechanically with gaskets on four sides.
   c. Glazing Plane: Center.
   d. Finish: Clear anodic finish.

NOT FOR BIDDING

C. Backer Plates: Manufacturer's standard, continuous backer plates for framing members, if not integral, where framing abuts adjacent construction.

D. Brackets and Reinforcements: Manufacturer's standard high-strength aluminum with nonstaining, nonferrous shims for aligning system components.

E. Materials:

1. Aluminum: Alloy and temper recommended by manufacturer for type of use and finish indicated.

   a. Sheet and Plate: ASTM B 209 (ASTM B 209M).
   b. Extruded Bars, Rods, Profiles, and Tubes: ASTM B 221 (ASTM B 221M).
   c. Extruded Structural Pipe and Tubes: ASTM B 429/B 429M.
   d. Structural Profiles: ASTM B 308/B 308M.

2. Steel Reinforcement: Manufacturer's standard zinc-rich, corrosion-resistant primer complying with SSPC-PS Guide No. 12.00; applied immediately after surface preparation and pretreatment. Select surface preparation methods according to recommendations in SSPC-SP COM, and prepare surfaces according to applicable SSPC standard.

   a. Structural Shapes, Plates, and Bars: ASTM A 36/A 36M.
   b. Cold-Rolled Sheet and Strip: ASTM A 1008/A 1008M.
   c. Hot-Rolled Sheet and Strip: ASTM A 1011/A 1011M.

2.4 ENTRANCE DOOR SYSTEMS

A. Entrance Doors: Equivalent to Kawneer 500 Tuffline series standard glazed entrance doors for manual-swing operation.

1. Door Construction: 2-inch (50.8-mm) overall thickness, with minimum 0.188-inch- (4.8-mm-) thick, extruded-aluminum tubular rail and stile members. Mechanically fasten corners with reinforcing brackets that are deeply penetrated and fillet welded or that incorporate concealed tie rods.

   a. Thermal Construction: High-performance plastic connectors separate aluminum members exposed to the exterior from members exposed to the interior.

2. Door Design: Wide stile:

   a. 5-inch nominal width vertical styles.
   b. 10-inch nominal width bottom rail.
   c. 8-inch nominal width middle rail.
   d. 5-inch nominal width top rail.

3. Glazing Stops and Gaskets: Square, snap-on, extruded-aluminum stops and preformed gaskets.

   a. Provide nonremovable glazing stops on outside of door.

NOT FOR BIDDING

2.5 ENTRANCE DOOR HARDWARE

A. Entrance Door Hardware: Hardware not specified in this Section is specified in Section 087111 "Door Hardware (Descriptive Specification)."

B. General: Provide entrance door hardware and entrance door hardware sets indicated in door and frame schedule for each entrance door to comply with requirements in this Section.

1. Entrance Door Hardware Sets: Provide quantity, item, size, finish or color indicated, and products equivalent in function and comparable in quality to named products].
2. Sequence of Operation: Provide electrified door hardware function, sequence of operation, and interface with other building control systems indicated.
3. Opening-Force Requirements:

a. Egress Doors: Not more than 15 lbf (67 N) to release the latch and not more than 30 lbf (133 N)to set the door in motion and not more than 15 lbf (67 N) to open the door to its minimum required width.
b. Accessible Interior Doors: Not more than 5 lbf (22.2 N) to fully open door.

C. Designations: Requirements for design, grade, function, finish, size, and other distinctive qualities of each type of entrance door hardware are indicated in "Entrance Door Hardware Sets" Article. Products are identified by using entrance door hardware designations as follows:

1. Named Manufacturers' Products: Manufacturer and product designation are listed for each door hardware type required for the purpose of establishing minimum requirements. Manufacturers' names are abbreviated in "Entrance Door Hardware Sets" Article.
2. References to BHMA Standards: Provide products complying with these standards and requirements for description, quality, and function.

D. Continuous-Gear Hinges: Manufacturer's standard with stainless-steel bearings between knuckles, fabricated to full height of door and frame.

E. Mortise Auxiliary Locks: BHMA A156.5, Grade 1.

F. Panic Exit Devices: BHMA A156.3, Grade 1, listed and labeled by a testing and inspecting agency acceptable to authorities having jurisdiction, for panic protection, based on testing according to UL 305.

G. Cylinders: As specified in Section 087111 "Door Hardware (Descriptive Specification.

1. Keying: Grand Master key system. Permanently inscribe each key with a visual key control number and include notation "DO NOT DUPLICATE".

H. Strikes: Provide strike with black-plastic dust box for each latch or lock bolt; fabricated for aluminum framing.

I. Operating Trim: BHMA A156.6.

J. Removable Mullions: BHMA A156.3, extruded aluminum.

NOT FOR BIDDING

1. When used with panic exit devices, provide removable mullions listed and labeled by a testing and inspecting agency acceptable to authorities having jurisdiction, for panic protection, based on testing according to UL 305. Use only mullions that have been tested with exit devices to be used.

K. Closers: BHMA A156.4, Grade 1, with accessories required for a complete installation, sized as required by door size, exposure to weather, and anticipated frequency of use; adjustable to comply with field conditions and requirements for opening force.

L. Concealed Overhead Holders: BHMA A156.8, Grade 1.

M. Surface-Mounted Holders: BHMA A156.16, Grade 1.

N. Door Stops: BHMA A156.16, Grade 1, floor or wall mounted as appropriate for door location indicated, with integral rubber bumper.

O. Weather Stripping: Manufacturer's standard replaceable components.

1. Compression Type: Made of ASTM D 2000, molded neoprene, or ASTM D 2287, molded PVC.
2. Sliding Type: AAMA 701/702, made of wool, polypropylene, or nylon woven pile with nylon-fabric or aluminum-strip backing.

P. Weather Sweeps: Manufacturer's standard exterior-door bottom sweep with concealed fasteners on mounting strip.

Q. Silencers: BHMA A156.16, Grade 1.

R. Thresholds: BHMA A156.21, raised thresholds beveled with a slope of not more than 1:2, with maximum height of 1/2 inch (12.7 mm).

2.6 GLAZING

A. Glazing: Comply with Section 088000 "Glazing."

B. Glazing Gaskets: Comply with Section 088000 "Glazing."

C. Glazing Sealants: Comply with Section 088000 "Glazing."

D. Sealants used inside the weatherproofing system shall have a VOC content of 250 g/L.

E. Weatherseal Sealants: ASTM C 920 for Type S; Grade NS; Class 25; Uses NT, G, A, and O; chemically curing silicone formulation that is compatible with structural sealant and other system components with which it comes in contact; recommended by structural-sealant, weatherseal sealant, and structural-sealant-glazed storefront manufacturers for this use.

1. Color: Match structural sealant.

NOT FOR BIDDING

2.7 ACCESSORIES

A. Fasteners and Accessories: Manufacturer's standard corrosion-resistant, nonstaining, nonbleeding fasteners and accessories compatible with adjacent materials.

1. Use self-locking devices where fasteners are subject to loosening or turning out from thermal and structural movements, wind loads, or vibration.
2. Reinforce members as required to receive fastener threads.

B. Anchors: Three-way adjustable anchors with minimum adjustment of 1 inch (25.4 mm) that accommodate fabrication and installation tolerances in material and finish compatible with adjoining materials and recommended by manufacturer.

1. Concrete and Masonry Inserts: Hot-dip galvanized cast-iron, malleable-iron, or steel inserts complying with ASTM A 123/A 123M or ASTM A 153/A 153M requirements.

C. Concealed Flashing: 0.0179-inch (26 gage) minimum dead-soft stainless steel, or 0.026-inch-thick minimum extruded aluminum of alloy and type selected by manufacturer for compatibility with other components..

2.8 FABRICATION

A. Form or extrude aluminum shapes before finishing.

B. Weld in concealed locations to greatest extent possible to minimize distortion or discoloration of finish. Remove weld spatter and welding oxides from exposed surfaces by descaling or grinding.

C. Fabricate components that, when assembled, have the following characteristics:

1. Profiles that are sharp, straight, and free of defects or deformations.
2. Accurately fitted joints with ends coped or mitered.
3. Physical and thermal isolation of glazing from framing members.
4. Accommodations for thermal and mechanical movements of glazing and framing to maintain required glazing edge clearances.
5. Provisions for field replacement of glazing from exterior.
6. Fasteners, anchors, and connection devices that are concealed from view to greatest extent possible.

D. Mechanically Glazed Framing Members: Fabricate for flush glazing without projecting stops.

E. Storefront Framing: Fabricate components for assembly using screw-spline system.

F. Entrance Door Frames: Reinforce as required to support loads imposed by door operation and for installing entrance door hardware.

1. At exterior doors, provide compression weather stripping at fixed stops.
2. At interior doors, provide silencers at stops to prevent metal-to-metal contact. Install three silencers on strike jamb of single-door frames and two silencers on head of frames for pairs of doors.

NOT FOR BIDDING

G. Entrance Doors: Reinforce doors as required for installing entrance door hardware.

1. At pairs of exterior doors, provide sliding-type weather stripping retained in adjustable strip and mortised into door edge.
2. At exterior doors, provide weather sweeps applied to door bottoms.

H. Entrance Door Hardware Installation: Factory install entrance door hardware to the greatest extent possible. Cut, drill, and tap for factory-installed entrance door hardware before applying finishes.

I. After fabrication, clearly mark components to identify their locations in Project according to Shop Drawings.

2.9 ALUMINUM FINISHES

A. Clear Anodic Finish: AAMA 611, AA-M12C22A41, Class I, 0.018 mm or thicker.

2.10 SOURCE QUALITY CONTROL

A. Structural Sealant: Perform quality-control procedures complying with ASTM C 1401 recommendations including, but not limited to, assembly material qualification procedures, sealant testing, and assembly fabrication reviews and checks.

PART 3 - EXECUTION

3.1 EXAMINATION

A. Examine areas, with Installer present, for compliance with requirements for installation tolerances and other conditions affecting performance of the Work.

B. Proceed with installation only after unsatisfactory conditions have been corrected.

3.2 PREPARATION

A. Prepare surfaces that are in contact with structural sealant according to sealant manufacturer's written instructions to ensure compatibility and adhesion. Preparation includes, but is not limited to, cleaning and priming surfaces.

3.3 INSTALLATION

A. General:

1. Comply with manufacturer's written instructions.
2. Do not install damaged components.
3. Fit joints to produce hairline joints free of burrs and distortion.
4. Rigidly secure nonmovement joints.

NOT FOR BIDDING

5. Install anchors with separators and isolators to prevent metal corrosion and electrolytic deterioration and to prevent impeding movement of moving joints.
6. Seal perimeter and other joints watertight unless otherwise indicated.

B. Metal Protection:

1. Where aluminum is in contact with dissimilar metals, protect against galvanic action by painting contact surfaces with materials recommended by manufacturer for this purpose or by installing nonconductive spacers.
2. Where aluminum is in contact with concrete or masonry, protect against corrosion by painting contact surfaces with bituminous paint.

C. Set continuous sill members and flashing in full sealant bed as specified in Section 079200 "Joint Sealants" to produce weathertight installation.

D. Install components plumb and true in alignment with established lines and grades.

E. Install operable units level and plumb, securely anchored, and without distortion. Adjust weather-stripping contact and hardware movement to produce proper operation.

F. Install glazing as specified in Section 088000 "Glazing."

G. Install weatherseal sealant according to Section 079200 "Joint Sealants" and according to sealant manufacturer's written instructions to produce weatherproof joints. Install joint filler behind sealant as recommended by sealant manufacturer.

H. Entrance Doors: Install doors to produce smooth operation and tight fit at contact points.

1. Exterior Doors: Install to produce weathertight enclosure and tight fit at weather stripping.
2. Field-Installed Entrance Door Hardware: Install surface-mounted entrance door hardware according to entrance door hardware manufacturers' written instructions using concealed fasteners to greatest extent possible.

3.4 ERECTION TOLERANCES

A. Erection Tolerances: Install aluminum-framed entrances and storefronts to comply with the following maximum tolerances:

1. Plumb: 1/8 inch in 10 feet (3.2 mm in 3 m); 1/4 inch in 40 feet (6.35 mm in 12.2 m).
2. Level: 1/8 inch in 20 feet (3.2 mm in 6 m); 1/4 inch in 40 feet (6.35 mm in 12.2 m).
3. Alignment:

a. Where surfaces abut in line or are separated by reveal or protruding element up to 1/2 inch (12.7 mm) wide, limit offset from true alignment to 1/16 inch (1.6 mm).
b. Where surfaces are separated by reveal or protruding element from 1/2 to 1 inch (12.7 to 25.4 mm) wide, limit offset from true alignment to 1/8 inch (3.2 mm).
c. Where surfaces are separated by reveal or protruding element of 1 inch (25.4 mm) wide or more, limit offset from true alignment to 1/4 inch (6 mm).

NOT FOR BIDDING

4. Location: Limit variation from plane to 1/8 inch in 12 feet (3.2 mm in 3.6 m); 1/2 inch (12.7 mm) over total length.

3.5 FIELD QUALITY CONTROL

A. Testing Agency: Engage a qualified testing agency to perform tests and inspections.

B. Field Quality-Control Testing: Perform the following test on representative areas of aluminum-framed entrances and storefronts.

1. Water-Spray Test: Before installation of interior finishes has begun, areas designated by Architect shall be tested according to AAMA 501.2 and shall not evidence water penetration.

a. Perform a minimum of **two** tests in areas as directed by Architect.

C. Structural-Sealant Adhesion: Test structural sealant according to recommendations in ASTM C 1401, Destructive Test Method A, "Hand Pull Tab (Destructive)," Appendix X2.

1. Test a minimum of two areas on each building facade.
2. Repair installation areas damaged by testing.

D. Aluminum-framed entrances and storefronts will be considered defective if they do not pass tests and inspections.

E. Prepare test and inspection reports.

3.6 MAINTENANCE SERVICE

A. Entrance Door Hardware:

1. Maintenance Tools and Instructions: Furnish a complete set of specialized tools and maintenance instructions as needed for Owner's continued adjustment, maintenance, and removal and replacement of entrance door hardware.
2. Initial Maintenance Service: Beginning at Substantial Completion, provide **six** months' full maintenance by skilled employees of entrance door hardware Installer. Include quarterly preventive maintenance, repair or replacement of worn or defective components, lubrication, cleaning, and adjusting as required for proper entrance door hardware operation at rated speed and capacity. Use parts and supplies that are the same as those used in the manufacture and installation of original equipment.

END OF SECTION 084113

NOT FOR BIDDING

(PAGE LEFT BLANK)

NOT FOR BIDDING

SECTION 085413 - FIBERGLASS WINDOWS

PART 1 - GENERAL

1.1 RELATED DOCUMENTS

A. Drawings and general provisions of the Contract, including General and Supplementary Conditions and Division 01 Specification Sections, apply to this Section.

1.2 SUMMARY

A. Section includes fiberglass-framed windows.

1.3 PREINSTALLATION MEETINGS

A. Preinstallation Conference: Conduct conference at Project site.

1. Review and finalize construction schedule and verify availability of materials, Installer's personnel, equipment, and facilities needed to make progress and avoid delays.
2. Review, discuss, and coordinate the interrelationship of fiberglass windows with other exterior wall components. Include provisions for anchoring, flashing, weeping, sealing perimeters, and protecting finishes.
3. Review and discuss the sequence of work required to construct a watertight and weathertight exterior building envelope.
4. Inspect and discuss the condition of substrate and other preparatory work performed by other trades.

1.4 ACTION SUBMITTALS

A. Product Data: For each type of product.

1. Include construction details, material descriptions, glazing and fabrication methods, dimensions of individual components and profiles, hardware, and finishes for fiberglass windows.

B. Shop Drawings: For fiberglass windows.

1. Include plans, elevations, sections, hardware, accessories, insect screens, operational clearances, and details of installation, including anchor, flashing, and sealant installation.

C. Samples: For each exposed product and for each color specified, 2 by 4 inches (50 by 100 mm) in size.

D. Samples for Initial Selection: For units with factory-applied finishes.

1. Include Samples of hardware and accessories involving color selection.

NOT FOR BIDDING

E. Samples for Verification: For fiberglass windows and components required, prepared on Samples of size indicated below:

1. Exposed Finishes: 2 by 4 inches (50 by 100 mm).
2. Exposed Hardware: Full-size units.

F. Product Schedule: For fiberglass windows. Use same designations indicated on Drawings.

1.5 INFORMATIONAL SUBMITTALS

A. Qualification Data: For manufacturer and Installer.

B. Product Test Reports: For each type of fiberglass window, for tests performed by a qualified testing agency.

C. Field quality-control reports.

D. Sample Warranties: For manufacturer's warranties.

1.6 QUALITY ASSURANCE

A. Manufacturer Qualifications: A manufacturer capable of fabricating fiberglass windows that meet or exceed performance requirements indicated and of documenting this performance by test reports and calculations.

B. Installer Qualifications: An installer acceptable to fiberglass window manufacturer for installation of units required for this Project.

1.7 WARRANTY

A. Manufacturer's Warranty: Manufacturer agrees to repair or replace fiberglass windows that fail in materials or workmanship within specified warranty period.

1. Failures include, but are not limited to, the following:

   a. Failure to meet performance requirements.
   b. Structural failures including excessive deflection, water leakage, and air infiltration.
   c. Faulty operation of movable sash and hardware.
   d. Deterioration of materials and finishes beyond normal weathering.
   e. Failure of insulating glass.

2. Warranty Period:

   a. Window: 10 years from date of Substantial Completion.
   b. Glazing Units: 10 years from date of Substantial Completion.

NOT FOR BIDDING

PART 2 - PRODUCTS

2.1 MANUFACTURERS

A. Source Limitations: Obtain fiberglass windows from single source from single manufacturer.

2.2 WINDOW PERFORMANCE REQUIREMENTS

A. Product Standard: Comply with AAMA/WDMA/CSA 101/I.S.2/A440 for definitions and minimum standards of performance, materials, components, accessories, and fabrication unless more stringent requirements are indicated.

1. Window Certification: WDMA certified with label attached to each window.

B. Thermal Transmittance: NFRC 100 maximum whole-window U-factor of 0.32 Btu/sq. ft. x h x deg F (1.83 W/sq. m x K).

C. Solar Heat-Gain Coefficient (SHGC): NFRC 200 maximum whole-window SHGC of 0.40.

D. Sound Transmission Class (STC): Rated for not less than 26 STC when tested for laboratory sound transmission loss according to ASTM E 90 and determined by ASTM E 413.

E. Outside-Inside Transmission Class (OITC): Rated for not less than 22 OITC when tested for laboratory sound transmission loss according to ASTM E 90 and determined by ASTM E 1332.

2.3 FIBERGLASS WINDOWS

A. Manufacturers: Subject to compliance with requirements, available manufacturers offering products that may be incorporated into the Work include, but are not limited to the following:

1. Accurate Dorwin.
2. Alpen High Performance Products.
3. Duxton Windows and Doors.
4. Fibertec Window and Door Manufacturing.
5. Graham Architectural Products Corporation.
6. Inline Fiberglass Ltd.
7. Milgard Manufacturing, Inc.
8. Pella Corporation.

B. Operating Types: Provide the following operating types in locations indicated on Drawings:

1. Fixed.

C. Frames and Sashes: Pultruded fiberglass complying with AAMA/WDMA/CSA 101/I.S.2/A440 and with exposed exterior fiberglass surfaces finished with manufacturer's standard enamel coating complying with AAMA 613.

1. Exterior Color: As selected by Architect from manufacturer's full range.
2. Interior Finish: Matching exterior color and finish.

NOT FOR BIDDING

D. Insulating-Glass Units: ASTM E 2190.

1. Glass: ASTM C 1036, Type 1, Class 1, q3.

a. Tint: Clear.
b. Kind: Fully tempered where indicated on Drawings.

2. Lites: Two.
3. Filling: Fill space between glass lites with argon.
4. Low-E Coating: Sputtered on second or third surface.

E. Glazing System: Manufacturer's standard factory-glazing system that produces weathertight seal.

F. Hardware, General: Provide manufacturer's standard hardware fabricated from aluminum, stainless steel, carbon steel complying with AAMA 907, or other corrosion-resistant material compatible with adjacent materials; designed to smoothly operate, tightly close, and securely lock fiberglass windows, and sized to accommodate sash weight and dimensions.

1. Exposed Hardware Color and Finish: As selected by Architect from manufacturer's full range.

G. Fasteners: Noncorrosive and compatible with window members, trim, hardware, anchors, and other components.

1. Exposed Fasteners: Do not use exposed fasteners to greatest extent possible. For application of hardware, use fasteners that match finish hardware being fastened.

2.4 ACCESSORIES

A. Dividers (False Muntins): Provide divider grilles in designs indicated for each sash lite.

1. Quantity and Type: One permanently located between insulating-glass lites.
2. Material: Manufacturer's standard.
3. Pattern: As indicated on Drawings.
4. Profile: As selected by Architect from manufacturer's full range.
5. Color: As selected by Architect from manufacturer's full range.

2.5 FABRICATION

A. Fabricate fiberglass windows in sizes indicated. Include a complete system for installing and anchoring windows.

B. Glaze fiberglass windows in the factory.

C. Mullions: Provide mullions and cover plates, matching window units, complete with anchors for support to structure and installation of window units. Allow for erection tolerances and provide for movement of window units due to thermal expansion and building deflections. Provide mullions and cover plates capable of withstanding design wind loads of window units.

NOT FOR BIDDING

D. Complete fabrication, assembly, finishing, hardware application, and other work in the factory to greatest extent possible. Disassemble components only as necessary for shipment and installation. Allow for scribing, trimming, and fitting at Project site.

PART 3 - EXECUTION

3.1 EXAMINATION

A. Examine openings, substrates, structural support, anchorage, and conditions, with Installer present, for compliance with requirements for installation tolerances and other conditions affecting performance of the Work.

B. Verify rough opening dimensions, levelness of sill plate, and operational clearances.

C. Examine wall flashings, vapor retarders, water and weather barriers, and other built-in components to ensure weathertight window installation.

D. Proceed with installation only after unsatisfactory conditions have been corrected.

3.2 INSTALLATION

A. Comply with manufacturer's written instructions for installing windows, hardware, accessories, and other components. For installation procedures and requirements not addressed in manufacturer's written instructions, comply with installation requirements in ASTM E 2112.

B. Install windows level, plumb, square, true to line, without distortion, anchored securely in place to structural support, and in proper relation to wall flashing and other adjacent construction to produce weathertight construction.

3.3 FIELD QUALITY CONTROL

A. Testing Agency: Engage a qualified testing agency to perform tests and inspections.

1. Testing and inspecting agency will interpret tests and state in each report whether tested work complies with or deviates from requirements.

B. Testing Services: Testing and inspecting of installed windows shall take place as follows:

1. Testing Methodology: Testing of windows for air infiltration and water resistance shall be performed according to AAMA 502.
2. Air-Infiltration Testing:

a. Test Pressure: That required to determine compliance with AAMA/WDMA/CSA 101/I.S.2/A440 performance class indicated.
b. Allowable Air-Leakage Rate: 1.5 times the applicable AAMA/WDMA/CSA 101/I.S.2/A440 rate for product type and performance class rounded down to one decimal place.

NOT FOR BIDDING

3. Water-Resistance Testing:

   a. Test Pressure: Two-thirds times test pressure required to determine compliance with AAMA/WDMA/CSA 101/I.S.2/A440 performance grade indicated.
   b. Allowable Water Infiltration: No water penetration.

4. Testing Extent: Three windows of each type as selected by Architect and a qualified independent testing and inspecting agency. Windows shall be tested after perimeter sealants have cured.
5. Test Reports: Prepared according to AAMA 502.

C. Windows will be considered defective if they do not pass tests and inspections.

D. Prepare test and inspection reports.

3.4 ADJUSTING, CLEANING, AND PROTECTION

A. Adjust operating sashes and hardware for a tight fit at contact points and weather stripping for smooth operation and weathertight closure.

B. Clean exposed surfaces immediately after installing windows. Remove excess sealants, glazing materials, dirt, and other substances.

   1. Keep protective films and coverings in place until final cleaning.

C. Remove and replace sashes if glass has been broken, chipped, cracked, abraded, or damaged during construction period.

D. Protect window surfaces from contact with contaminating substances resulting from construction operations. If contaminating substances do contact window surfaces, remove contaminants immediately according to manufacturer's written instructions.

END OF SECTION 085413

NOT FOR BIDDING

SECTION 087100 – DOOR HARDWARE

PART 1 - GENERAL

1.1 RELATED DOCUMENTS

A. Drawings and general provisions of the Contract, including General and Supplementary Conditions and Division 1 Specification Sections, apply to this Section.

1.2 SUMMARY

A. This Section includes commercial door hardware for the following:

1. Swinging doors.
2. Other doors to the extent indicated.

B. Door hardware includes, but is not necessarily limited to, the following:

1. Mechanical door hardware.
2. Cylinders specified for doors in other sections.

C. Related Sections:

1. Division 08 Section "Door Hardware Schedule".
2. Division 08 Section "Hollow Metal Doors and Frames".
3. Division 08 Section "Aluminum Doors and Frames".
4. Division 08 Section "Aluminum Framed Entrances and Storefron".

D. Codes and References: Comply with the version year adopted by the Authority Having Jurisdiction.

1. ANSI A117.1 - Accessible and Usable Buildings and Facilities.
2. ICC/IBC - International Building Code.
3. NFPA 70 - National Electrical Code.
4. NFPA 80 - Fire Doors and Windows.
5. NFPA 101 - Life Safety Code.
6. NFPA 105 - Installation of Smoke Door Assemblies.
7. State Building Codes, Local Amendments.

E. Standards: All hardware specified herein shall comply with the following industry standards:

1. ANSI/BHMA Certified Product Standards - A156 Series
2. UL10C – Positive Pressure Fire Tests of Door Assemblies

NOT FOR BIDDING

1.3 SUBMITTALS

A. Product Data: Manufacturer's product data sheets including installation details, material descriptions, dimensions of individual components and profiles, operational descriptions and finishes.

B. Door Hardware Schedule: Prepared by or under the supervision of supplier, detailing fabrication and assembly of door hardware, as well as procedures and diagrams. Coordinate the final Door Hardware Schedule with doors, frames, and related work to ensure proper size, thickness, hand, function, and finish of door hardware.

1. Format: Comply with scheduling sequence and vertical format in DHI's "Sequence and Format for the Hardware Schedule."

2. Organization: Organize the Door Hardware Schedule into door hardware sets indicating complete designations of every item required for each door or opening. Organize door hardware sets in same order as in the Door Hardware Sets at the end of Part 3. Submittals that do not follow the same format and order as the Door Hardware Sets will be rejected and subject to resubmission.

3. Content: Include the following information:

   a. Type, style, function, size, label, hand, and finish of each door hardware item.
   b. Manufacturer of each item.
   c. Fastenings and other pertinent information.
   d. Location of door hardware set, cross-referenced to Drawings, both on floor plans and in door and frame schedule.
   e. Explanation of abbreviations, symbols, and codes contained in schedule.
   f. Mounting locations for door hardware.
   g. Door and frame sizes and materials.
   h. Warranty information for each product.

4. Submittal Sequence: Submit the final Door Hardware Schedule at earliest possible date, particularly where approval of the Door Hardware Schedule must precede fabrication of other work that is critical in the Project construction schedule. Include Product Data, Samples, Shop Drawings of other work affected by door hardware, and other information essential to the coordinated review of the Door Hardware Schedule.

C. Proof of Certification: Provide copy of manufacturer(s) official certification or accreditation document indicating proof of status as a qualified installer of Windstorm assemblies.

D. Keying Schedule: After a keying meeting with the owner has taken place prepare a separate keying schedule detailing final instructions. Submit the keying schedule in electronic format. Include keying system explanation, door numbers, key set symbols, hardware set numbers and special instructions. Owner must approve submitted keying schedule prior to the ordering of permanent cylinders/cores.

E. Informational Submittals:

NOT FOR BIDDING

1. Product Test Reports: Indicating compliance with cycle testing requirements, based on evaluation of comprehensive tests performed by manufacturer and witnessed by a qualified independent testing agency.

F. Operating and Maintenance Manuals: Provide manufacturers operating and maintenance manuals for each item comprising the complete door hardware installation in quantity as required in Division 01, Closeout Submittals.

1.4 QUALITY ASSURANCE

A. Manufacturers Qualifications: Engage qualified manufacturers with a minimum 5 years of documented experience in producing hardware and equipment similar to that indicated for this Project and that have a proven record of successful in-service performance.

B. Installer Qualifications: A minimum 3 years documented experience installing both standard and electrified door hardware similar in material, design, and extent to that indicated for this Project and whose work has resulted in construction with a record of successful in-service performance.

C. Door Hardware Supplier Qualifications: Experienced commercial door hardware distributors with a minimum 5 years documented experience supplying both mechanical and electromechanical hardware installations comparable in material, design, and extent to that indicated for this Project. Supplier recognized as a factory direct distributor by the manufacturers of the primary materials with a warehousing facility in Project's vicinity. Supplier to have on staff a certified Architectural Hardware Consultant (AHC) available during the course of the Work to consult with Contractor, Architect, and Owner concerning both standard and electromechanical door hardware and keying.

D. Source Limitations: Obtain each type and variety of door hardware specified in this section from a single source unless otherwise indicated.

1. Electrified modifications or enhancements made to a source manufacturer's product line by a secondary or third party source will not be accepted.

2. Provide electromechanical door hardware from the same manufacturer as mechanical door hardware, unless otherwise indicated.

E. Each unit to bear third party permanent label demonstrating compliance with the referenced standards.

F. Keying Conference: Conduct conference to comply with requirements in Division 01 Section "Project Meetings." Keying conference to incorporate the following criteria into the final keying schedule document:

1. Function of building, purpose of each area and degree of security required.
2. Plans for existing and future key system expansion.
3. Requirements for key control storage and software.
4. Installation of permanent keys, cylinder cores and software.
5. Address and requirements for delivery of keys.

NOT FOR BIDDING

G. Pre-Submittal Conference: Conduct coordination conference in compliance with requirements in Division 01 Section "Project Meetings" with attendance by representatives of Supplier(s), Installer(s), and Contractor(s) to review proper methods and the procedures for receiving, handling, and installing door hardware.

1. Prior to installation of door hardware, conduct a project specific training meeting to instruct the installing contractors' personnel on the proper installation and adjustment of their respective products. Product training to be attended by installers of door hardware (including electromechanical hardware) for aluminum, hollow metal and wood doors. Training will include the use of installation manuals, hardware schedules, templates and physical product samples as required.
2. Inspect and discuss electrical roughing-in, power supply connections, and other preparatory work performed by other trades.
3. Review sequence of operation narratives for each unique access controlled opening.
4. Review and finalize construction schedule and verify availability of materials.
5. Review the required inspecting, testing, commissioning and demonstration procedures

H. At completion of installation, provide written documentation that components were applied to manufacturer's instructions and recommendations and according to approved schedule.

1.5 DELIVERY, STORAGE, AND HANDLING

A. Inventory door hardware on receipt and provide secure lock-up and shelving for door hardware delivered to Project site. Do not store electronic access control hardware, software or accessories at Project site without prior authorization.

B. Tag each item or package separately with identification related to the final Door Hardware Schedule, and include basic installation instructions with each item or package.

C. Deliver, as applicable, permanent keys, cylinders, cores, access control credentials, software and related accessories directly to Owner via registered mail or overnight package service. Instructions for delivery to the Owner shall be established at the "Keying Conference".

1.6 COORDINATION

A. Templates: Obtain and distribute to the parties involved templates for doors, frames, and other work specified to be factory prepared for installing standard and electrified hardware. Check Shop Drawings of other work to confirm that adequate provisions are made for locating and installing hardware to comply with indicated requirements.

B. Door and Frame Preparation: Doors and corresponding frames are to be prepared, reinforced and pre-wired (if applicable) to receive the installation of the specified electrified, monitoring, signaling and access control system hardware without additional in-field modifications.

1.7 WARRANTY

A. General Warranty: Reference Division 01, General Requirements. Special warranties specified in this Article shall not deprive Owner of other rights Owner may have under other provisions

NOT FOR BIDDING

of the Contract Documents and shall be in addition to, and run concurrent with, other warranties made by Contractor under requirements of the Contract Documents.

B. Warranty Period: Written warranty, executed by manufacturer(s), agreeing to repair or replace components of standard and electrified door hardware that fails in materials or workmanship within specified warranty period after final acceptance by the Owner. Failures include, but are not limited to, the following:

1. Structural failures including excessive deflection, cracking, or breakage.
2. Faulty operation of the hardware.
3. Deterioration of metals, metal finishes, and other materials beyond normal weathering.
4. Electrical component defects and failures within the systems operation.

C. Standard Warranty Period: One year from date of Substantial Completion, unless otherwise indicated.

D. Special Warranty Periods:
1. Seven years for heavy duty cylindrical (bored) locks and latches.
2. Twenty five years for manual surface door closer bodies.

1.8 MAINTENANCE SERVICE

A. Maintenance Tools and Instructions: Furnish a complete set of specialized tools and maintenance instructions as needed for Owner's continued adjustment, maintenance, and removal and replacement of door hardware.

PART 2 - PRODUCTS

2.1 SCHEDULED DOOR HARDWARE

A. General: Provide door hardware for each door to comply with requirements in Door Hardware Sets and each referenced section that products are to be supplied under.

B. Designations: Requirements for quantity, item, size, finish or color, grade, function, and other distinctive qualities of each type of door hardware are indicated in the Door Hardware Sets at the end of Part 3. Products are identified by using door hardware designations, as follows:

C. Named Manufacturer's Products: Product designation and manufacturer are listed for each door hardware type required for the purpose of establishing requirements. Manufacturers' names are abbreviated in the Door Hardware Schedule.

D. Substitutions: Requests for substitution and product approval for inclusive mechanical and electromechanical door hardware in compliance with the specifications must be submitted in writing and in accordance with the procedures and time frames outlined in Division 01, Substitution Procedures. Approval of requests is at the discretion of the architect, owner, and their designated consultants.

NOT FOR BIDDING

2.2 HANGING DEVICES

A. Hinges: ANSI/BHMA A156.1 certified butt hinges with number of hinge knuckles as specified in the Door Hardware Sets.

1. Quantity: Provide the following hinge quantity, unless otherwise indicated:

   a. Two Hinges: For doors with heights up to 60 inches.
   b. Three Hinges: For doors with heights 61 to 90 inches.
   c. Four Hinges: For doors with heights 91 to 120 inches.
   d. For doors with heights more than 120 inches, provide 4 hinges, plus 1 hinge for every 30 inches of door height greater than 120 inches.

2. Hinge Size: Provide the following, unless otherwise indicated, with hinge widths sized for door thickness and clearances required:

   a. Widths up to 3'0": 4-1/2" standard or heavy weight as specified.
   b. Sizes from 3'1" to 4'0": 5" standard or heavy weight as specified.

3. Hinge Weight and Base Material: Unless otherwise indicated, provide the following:

   a. Exterior Doors: Heavy weight, non-ferrous, ball bearing or oil impregnated bearing hinges unless Hardware Sets indicate standard weight.
   b. Interior Doors: Standard weight, steel, ball bearing or oil impregnated bearing hinges unless Hardware Sets indicate heavy weight.

4. Hinge Options: Comply with the following where indicated in the Hardware Sets or on Drawings:

   a. Non-removable Pins: Provide set screw in hinge barrel that, when tightened into a groove in hinge pin, prevents removal of pin while door is closed; for the all out-swinging lockable doors.

Acceptable Manufacturers:

   a. Bommer Industries (BO).
   b. Hager Companies (HA).
   c. McKinney Products (MK).

2.3 DOOR OPERATING TRIM

A. Flush Bolts and Surface Bolts: ANSI/BHMA A156.3 and A156.16, Grade 1, certified.

1. Manual flush bolts to be furnished with top rod of sufficient length to allow bolt location approximately six feet from the floor.
2. Furnish dust proof strikes for bottom bolts.
3. Surface bolts to be minimum 8" in length and U.L. listed for labeled fire doors and U.L. listed for windstorm components where applicable.
4. Provide related accessories (mounting brackets, strikes, coordinators, etc.) as required for appropriate installation and operation.

NOT FOR BIDDING

5. Acceptable Manufacturers:

    a. Door Controls International (DC).
    b. Rockwood Manufacturing (RO).
    c. Trimco (TC).

B. Door Push Plates and Pulls: ANS/BHMA A156.6 certified door pushes and pulls of type and design specified in the Hardware Sets. Coordinate and provide proper width and height as required where conflicting hardware dictates.

1. Push/Pull Plates: Minimum .050 inch thick, size as indicated in hardware sets, with beveled edges, secured with exposed screws unless otherwise indicated.
2. Door Pull and Push Bar Design: Size, shape, and material as indicated in the hardware sets. Minimum clearance of 2 1/2-inches from face of door unless otherwise indicated.
3. Offset Pull Design: Size, shape, and material as indicated in the hardware sets. Minimum clearance of 2 1/2-inches from face of door and offset of 90 degrees unless otherwise indicated.
4. Fasteners: Provide manufacturer's designated fastener type as indicated in Hardware Sets.

    a. Acceptable Manufacturers:

    1) Hiawatha, Inc. (HI).
    2) Rockwood Manufacturing (RO).
    3) Trimco (TC).

2.4 CYLINDERS AND KEYING

A. General: Cylinder manufacturer to have minimum (10) years experience designing secured master key systems and have on record a published security keying system policy.

1. Acceptable Manufacturers:

    a. Schlage (SC).
    b. No Substitution.

B. Cylinders: Original manufacturer cylinders complying with the following:

1. Mortise Type: Threaded cylinders with rings and cams to suit hardware application.
2. Rim Type: Cylinders with back plate, flat-type vertical or horizontal tailpiece, and raised trim ring.
3. Bore-In-Lock Type: Cylinders with tailpieces to suit locks.
4. Mortise and rim cylinder collars to be solid and recessed to allow the cylinder face to be flush and be free spinning with matching finishes.
5. Keyway: Match Facility Standard.

C. Keying System: Each type of lock and cylinders to be factory keyed. Conduct specified "Keying Conference" to define and document keying system instructions and requirements.

1. Furnish factory cut, nickel-silver large bow permanently inscribed with a visual key control number as directed by Owner.

NOT FOR BIDDING

2. Existing System: Key locks to Owner's existing system.
3. New System: Key locks to a new key system as directed by the Owner.

D. Key Quantity: Provide the following minimum number of keys:

1. Change Keys per Cylinder: Two (2)
2. Master Keys (per Master Key Level/Group): Five (5).
3. Construction Keys (where required): Ten (10).

E. Construction Keying: Provide construction master keyed cylinders.

2.5 MECHANICAL LOCKS AND LATCHING DEVICES

A. Cylindrical Locksets, Grade 1 (Heavy Duty): ANSI/BHMA A156.2, Series 4000, Grade 1 certified cylindrical (bored) locksets furnished in the functions as specified in the Hardware Sets. Lock chassis fabricated of heavy gauge steel, zinc dichromate plated, with through-bolted application. Furnish with solid cast levers, standard 2 3/4" backset, and 1/2" (3/4" at rated paired openings) throw brass or stainless steel latch bolt. Locks are to be non-handed and fully field reversible.

1. Acceptable Manufacturers:

a. Corbin Russwin Hardware (RU) – CL3300 Series.
b. Sargent Manufacturing (SA) – 10 Line.
c. Schlage (SC) – NX Series.

B. Lock Trim Design: As specified in Hardware Sets.

2.6 AUXILIARY LOCKS

A. Cylindrical Deadlocks: ANSI/BHMA A156.5, Grade 1, cylindrical type deadlocks to fit standard ANSI 161 preparation and 1 3/8" to 1 3/4" thickness doors. Provide tapered collars to resist vandalism and 1" throw solid steel bolt with hardened steel roller pins. Deadlocks to be products of the same source manufacturer and keyway as other locksets.

1. Acceptable Manufacturers:

a. Corbin Russwin Hardware (RU) - DL3000 Series.
b. Sargent Manufacturing (SA) - 480 Series.
c. Schlage (SC) - B600 Series.

2.7 LOCK AND LATCH STRIKES

A. Strikes: Provide manufacturer's standard strike with strike box for each latch or lock bolt, with curved lip extended to protect frame, finished to match door hardware set, unless otherwise indicated, and as follows:

NOT FOR BIDDING

1. Flat-Lip Strikes: For locks with three-piece antifriction latchbolts, as recommended by manufacturer.
2. Extra-Long-Lip Strikes: For locks used on frames with applied wood casing trim.
3. Aluminum-Frame Strike Box: Provide manufacturer's special strike box fabricated for aluminum framing.

B. Standards: Comply with the following:

1. Strikes for Mortise Locks and Latches: BHMA A156.13.
2. Strikes for Bored Locks and Latches: BHMA A156.2.
3. Strikes for Auxiliary Deadlocks: BHMA A156.5.
4. Dustproof Strikes: BHMA A156.16.

2.8 DOOR CLOSERS

A. All door closers specified herein shall meet or exceed the following criteria:

1. General: Door closers to be from one manufacturer, matching in design and style, with the same type door preparations and templates regardless of application or spring size. Closers to be non-handed with full sized covers including installation and adjusting information on inside of cover.

2. Standards: Closers to comply with UL-10C and UBC 7-2 for Positive Pressure Fire Test and be U.L. listed for use of fire rated doors.

3. Cycle Testing: Provide closers which have surpassed 15 million cycles in a test witnessed and verified by UL.

4. Size of Units: Comply with manufacturer's written recommendations for sizing of door closers depending on size of door, exposure to weather, and anticipated frequency of use. Where closers are indicated for doors required to be accessible to the physically handicapped, provide units complying with ANSI ICC/A117.1.

5. Closer Arms: Provide heavy duty, forged steel closer arms unless otherwise indicated in Hardware Sets.

   a. Where closers are indicated to have mechanical dead-stop, provide heavy duty arms and brackets with an integral positive stop.
   b. Where closers are indicated to have mechanical hold open, provide heavy duty units with an additional built-in mechanical holder assembly designed to hold open against normal wind and traffic conditions. Holder to be manually selectable to on-off position.
   c. Where closers are indicated to have a cushion-type stop, provide heavy duty arms and brackets with spring stop mechanism to cushion door when opened to maximum degree.
   d. Closers shall not be installed on exterior or corridor side of doors; where possible install closers on door for optimum aesthetics. Provide drop plates or other accessories as required for proper mounting.

NOT FOR BIDDING

6. Closer Accessories: Provide door closer accessories including custom templates, special mounting brackets, spacers and drop plates, and through-bolt or security type fasteners as specified in the door Hardware Sets.

B. Door Closers, Surface Mounted (Heavy Duty): ANSI/BHMA A156.4, Grade 1 surface mounted, heavy duty door closers with complete spring power adjustment sizes 1 thru 6; and fully operational adjustable according to door size, frequency of use, and opening force. Closers to be rack and pinion type, one piece cast iron or aluminum alloy body construction, with adjustable backcheck and separate non-critical valves for closing sweep and latch speed control. Provide non-handed units standard.

1. Acceptable Manufacturers:

a. Corbin Russwin Hardware (RU) - DC8000 Series.
b. Sargent Manufacturing (SA) - 351 Series.
c. Norton Door Controls (NO) - 7500 Series.

2.9 ARCHITECTURAL TRIM

A. Door Protective Trim

1. General: Door protective trim units to be of type and design as specified below or in the Hardware Sets.

2. Size: Fabricate protection plates (kick, armor, or mop) not more than 2" less than door width (LDW) on stop side of single doors and 1" LDW on stop side of pairs of doors, and not more than 1" less than door width on pull side. Coordinate and provide proper width and height as required where conflicting hardware dictates. Height to be as specified in the Hardware Sets.

3. Metal Protection Plates: ANSI/BHMA A156.6 certified metal protection plates (kick, armor, or mop), beveled on four edges (B4E), fabricated from the following:

a. Stainless Steel 300 series, 050-inch thick, with countersunk screw holes (CSK).

4. Fasteners: Provide manufacturer's designated fastener type as specified in the Hardware Sets.

5. Metal Door Edging: Door protection edging fabricated from a minimum .050-inch thick metal sheet, formed into an angle or "U" cap shapes, surface or mortised mounted onto edge of door. Provide appropriate leg overlap to account for protection plates as required. Height to be as specified in the Hardware Sets.

6. Acceptable Manufacturers:

a. Rockwood Manufacturing (RO).
b. Trimco (TC).

NOT FOR BIDDING

2.10 DOOR STOPS AND HOLDERS

A. General: Door stops and holders to be of type and design as specified below or in the Hardware Sets.

B. Door Stops and Bumpers: ANSI/BHMA A156.16, Grade 1 certified door stops and wall bumpers. Provide wall bumpers, either convex or concave types with anchorage as indicated, unless floor or other types of door stops are specified in Hardware Sets. Do not mount floor stops where they will impede traffic. Where floor or wall bumpers are not appropriate, provide overhead type stops and holders.

1. Acceptable Manufacturers:

a. Hiawatha, Inc. (HI).
b. Rockwood Manufacturing (RO).
c. Trimco (TC).

C. Overhead Door Stops and Holders: ANSI/BHMA A156.6, Grade 1 certified overhead stops and holders to be surface or concealed types as indicated in Hardware Sets. Track, slide, arm and jamb bracket to be constructed of extruded bronze and shock absorber spring of heavy tempered steel. Provide non-handed design with mounting brackets as required for proper operation and function.

1. Acceptable Manufacturers:

a. ABH Manufacturing (AB).
b. Rixson Door Control (RF).
c. Rockwood Manufacturing (RO).

2.11 ARCHITECTURAL SEALS

A. General: Thresholds, weatherstripping, and gasket seals to be of type and design as specified below or in the Hardware Sets. Provide continuous weatherstrip gasketing on exterior doors and provide smoke, light, or sound gasketing on interior doors where indicated. At exterior applications provide non-corrosive fasteners and elsewhere where indicated.

B. Smoke Labeled Gasketing: Assemblies complying with NFPA 105 that are listed and labeled by a testing and inspecting agency acceptable to authorities having jurisdiction, for smoke control ratings indicated, based on testing according to UL 1784.

1. Provide smoke labeled perimeter gasketing at all smoke labeled openings.

C. Fire Labeled Gasketing: Assemblies complying with NFPA 80 that are listed and labeled by a testing and inspecting agency acceptable to authorities having jurisdiction, for fire ratings indicated, based on testing according to UL-10C.

1. Provide intumescent seals as indicated to meet UL10C Standard for Positive Pressure Fire Tests of Door Assemblies, and UBC 7-2, Fire Tests of Door Assemblies.

NOT FOR BIDDING

D. Sound-Rated Gasketing: Assemblies that are listed and labeled by a testing and inspecting agency, for sound ratings indicated, based on testing according to ASTM E 1408.

E. Replaceable Seal Strips: Provide only those units where resilient or flexible seal strips are easily replaceable and readily available from stocks maintained by manufacturer.

F. Acceptable Manufacturers:

1. National Guard Products (NG).
2. Pemko Manufacturing (PE).
3. Reese Enterprises, Inc. (RS).

2.12 FABRICATION

A. Fasteners: Provide door hardware manufactured to comply with published templates generally prepared for machine, wood, and sheet metal screws. Provide screws according to manufacturers recognized installation standards for application intended.

2.13 FINISHES

A. Standard: Designations used in the Hardware Sets and elsewhere indicate hardware finishes complying with ANSI/BHMA A156.18, including coordination with traditional U.S. finishes indicated by certain manufacturers for their products.

B. Provide quality of finish, including thickness of plating or coating (if any), composition, hardness, and other qualities complying with manufacturer's standards, but in no case less than specified by referenced standards for the applicable units of hardware.

C. Protect mechanical finishes on exposed surfaces from damage by applying a strippable, temporary protective covering before shipping.

PART 3 - EXECUTION

3.1 EXAMINATION

A. Examine scheduled openings, with Installer present, for compliance with requirements for installation tolerances, labeled fire door assembly construction, wall and floor construction, and other conditions affecting performance.

B. Notify architect of any discrepancies or conflicts between the door schedule, door types, drawings and scheduled hardware. Proceed only after such discrepancies or conflicts have been resolved in writing.

3.2 PREPARATION

A. Hollow Metal Doors and Frames: Comply with ANSI/DHI A115 series.

NOT FOR BIDDING

B. Wood Doors: Comply with ANSI/DHI A115-W series.

3.3 INSTALLATION

A. Install each item of mechanical and electromechanical hardware and access control equipment to comply with manufacturer's written instructions and according to specifications.

1. Installers are to be trained and certified by the manufacturer on the proper installation and adjustment of fire, life safety, and security products including latching devices; locking devices; closing devices; and seals.

B. Mounting Heights: Mount door hardware units at heights indicated in following applicable publications, unless specifically indicated or required to comply with governing regulations:

1. Standard Steel Doors and Frames: DHI's "Recommended Locations for Architectural Hardware for Standard Steel Doors and Frames."
2. Wood Doors: DHI WDHS.3, "Recommended Locations for Architectural Hardware for Wood Flush Doors."
3. Where indicated to comply with accessibility requirements, comply with ANSI A117.1 "Accessibility Guidelines for Buildings and Facilities."
4. Provide blocking in drywall partitions where wall stops or other wall mounted hardware is located.

C. Retrofitting: Install door hardware to comply with manufacturer's published templates and written instructions. Where cutting and fitting are required to install door hardware onto or into surfaces that are later to be painted or finished in another way, coordinate removal, storage, and reinstallation of surface protective trim units with finishing work specified in Division 9 Sections. Do not install surface-mounted items until finishes have been completed on substrates involved.

D. Thresholds: Set thresholds for exterior and acoustical doors in full bed of sealant complying with requirements specified in Division 7 Section "Joint Sealants."

E. Storage: Provide a secure lock up for hardware delivered to the project but not yet installed. Control the handling and installation of hardware items so that the completion of the work will not be delayed by hardware losses before and after installation.

3.4 FIELD QUALITY CONTROL

A. Field Inspection: Supplier will perform a final inspection of installed door hardware and state in report whether work complies with or deviates from requirements, including whether door hardware is properly installed, operating and adjusted.

3.5 ADJUSTING

A. Initial Adjustment: Adjust and check each operating item of door hardware and each door to ensure proper operation or function of every unit. Replace units that cannot be adjusted to

NOT FOR BIDDING

operate as intended. Adjust door control devices to compensate for final operation of heating and ventilating equipment and to comply with referenced accessibility requirements.

3.6 CLEANING AND PROTECTION

A. Protect all hardware stored on construction site in a covered and dry place. Protect exposed hardware installed on doors during the construction phase. Install any door hardware at the latest possible time frame.

B. Clean adjacent surfaces soiled by door hardware installation.

C. Clean operating items as necessary to restore proper finish. Provide final protection and maintain conditions that ensure door hardware is without damage or deterioration at time of owner occupancy.

3.7 DEMONSTRATION

A. Instruct Owner's maintenance personnel to adjust, operate, and maintain mechanical and electromechanical door hardware.

3.8 DOOR HARDWARE SCHEDULE

A. The hardware sets represent the design intent and direction of the owner and architect. They are a guideline only and should not be considered a detailed hardware schedule. Discrepancies, conflicting hardware and missing items should be brought to the attention of the architect with corrections made prior to the bidding process. Omitted items not included in a hardware set should be scheduled with the appropriate additional hardware required for proper application and functionality.

B. Refer to Section 087113, Door Hardware Schedule, for hardware sets.

C. Manufacturer’s Abbreviations:

END OF SECTION 087100

NOT FOR BIDDING

SECTION 087113 – DOOR HARDWARE SCHEDULE

PART 1 - GENERAL

1.1 RELATED DOCUMENTS

A. Drawings and general provisions of the Contract, including General and Supplementary Conditions and Division 1 Specification Sections, apply to this section.

1.2 SUMMARY

A. This Section references specification sections relating to commercial door hardware for the following:

1. Swinging doors.
2. Sliding Doors.
3. Other doors to the extent indicated.

B. Commercial door hardware includes, but is not necessarily limited to, the following:

1. Mechanical door hardware.
2. Electromechanical and access control door hardware.
3. Electromechanical and access control door hardware power supplies, back-ups and surge protection.
4. Automatic operators.
5. Cylinders specified for doors in other sections.

C. Related Sections:

1. Division 08 Section "Door Hardware".

D. Codes and References: Comply with the version year adopted by the Authority Having Jurisdiction.

1. ANSI A117.1 - Accessible and Usable Buildings and Facilities.
2. ICC/IBC - International Building Code.
3. NFPA 70 - National Electrical Code.
4. NFPA 80 - Fire Doors and Windows.
5. NFPA 101 - Life Safety Code.
6. NFPA 105 - Installation of Smoke Door Assemblies.
7. State Building Codes, Local Amendments.

E. Standards: Reference Related Sections for requirements regarding compliance with applicable industry standards.

NOT FOR BIDDING

1.3 SUBMITTALS

A. Product Data: Manufacturer's product data sheets including installation details, material descriptions, dimensions of individual components and profiles, operational descriptions and finishes.

B. Door Hardware Schedule: Prepared by or under the supervision of supplier, detailing fabrication and assembly of door hardware, as well as procedures and diagrams. Coordinate the final Door Hardware Schedule with doors, frames, and related work to ensure proper size, thickness, hand, function, and finish of door hardware.

1. Format: Comply with scheduling sequence and vertical format in DHI's "Sequence and Format for the Hardware Schedule."

2. Organization: Organize the Door Hardware Schedule into door hardware sets indicating complete designations of every item required for each door or opening. Organize door hardware sets in same order as in the Door Hardware Sets at the end of Part 3. Submittals that do not follow the same format and order as the Door Hardware Sets will be rejected and subject to resubmission.

3. Content: Include the following information.

a. Type, style, function, size, label, hand, and finish of each door hardware item.
b. Manufacturer of each item.
c. Fastenings and other pertinent information.
d. Location of door hardware set, cross-referenced to Drawings, both on floor plans and in door and frame schedule.
e. Explanation of abbreviations, symbols, and codes contained in schedule.
f. Mounting locations for door hardware.
g. Door and frame sizes and materials.

4. Submittal Sequence: Submit the final Door Hardware Schedule at earliest possible date, particularly where approval of the Door Hardware Schedule must precede fabrication of other work that is critical in the Project construction schedule. Include Product Data, Samples, Shop Drawings of other work affected by door hardware, and other information essential to the coordinated review of the Door Hardware Schedule.

C. Keying Schedule: Prepared under the supervision of the Owner, separate schedule detailing final keying instructions for locksets and cylinders in writing. Include keying system explanation, door numbers, key set symbols, hardware set numbers and special instructions. Owner to approve submitted keying schedule prior to the ordering of permanent cylinders.

D. Product Test Reports: Indicating compliance with cycle testing requirements, based on evaluation of comprehensive tests performed by manufacturer and witnessed by a qualified independent testing agency.

E. Operating and Maintenance Manuals: Provide manufacturers operating and maintenance manuals for each item comprising the complete door hardware installation in quantity as required in Division 01, Closeout Submittals. The manual to include the name, address, and contact information of the manufacturers providing the hardware and their nearest service

NOT FOR BIDDING

representatives. The final copies delivered after completion of the installation test to include "as built" modifications made during installation, checkout, and acceptance.

F. Warranties and Maintenance: Special warranties and maintenance agreements specified in the Related Sections.

1.4 QUALITY ASSURANCE

A. Manufacturers Qualifications: Engage qualified manufacturers with a minimum [5] years of documented experience in producing hardware and equipment similar to that indicated for this Project and that have a proven record of successful in-service performance.

B. Installer Qualifications: Installers, trained by the primary product manufacturers, with a minimum [3] years documented experience installing both standard and electrified builders hardware similar in material, design, and extent to that indicated for this Project and whose work has resulted in construction with a record of successful in-service performance.

C. Door Hardware Supplier Qualifications: Experienced commercial door hardware distributors with a minimum [5] years documented experience supplying both mechanical and electromechanical hardware installations comparable in material, design, and extent to that indicated for this Project. Supplier recognized as a factory direct distributor in good standing by the manufacturers of the primary materials with a warehousing facility in Project's vicinity. Supplier to have on staff a certified Architectural Hardware Consultant (AHC) available during the course of the Work to consult with Contractor, Architect, and Owner concerning both standard and electromechanical door hardware and keying.

D. Source Limitations: Obtain each type and variety of Door Hardware specified in the Related Sections from a single source, qualified supplier unless otherwise indicated.

E. Regulatory Requirements: Comply with NFPA 70, NFPA 80, NFPA 101 and ANSI A117.1 requirements and guidelines as directed in the applicable model building code.

F. Pre-Submittal Conference: Conduct coordination conference in compliance with requirements in Division 01 Section "Project Meetings" with attendance by representatives of Supplier(s), Installer(s), and Contractor(s) to review proper methods and the procedures for receiving, handling, and installing door hardware.

1.5 DELIVERY, STORAGE, AND HANDLING

A. Inventory door hardware on receipt and provide secure lock-up and shelving for door hardware delivered to Project site. Do not store electronic access control hardware, software or accessories at Project site without prior authorization.

B. Tag each item or package separately with identification related to the final Door Hardware Schedule and include basic installation instructions with each item or package.

C. Deliver, as applicable, permanent keys, cylinders, cores, access control credentials, software and related accessories directly to Owner via registered mail or overnight package service. Instructions for delivery to the Owner shall be established at the "Keying Conference".

NOT FOR BIDDING

1.6 COORDINATION

A. Templates: Obtain and distribute to the parties involved templates for doors, frames, and other work specified to be factory prepared for installing standard and electrified hardware. Check Shop Drawings of other work to confirm that adequate provisions are made for locating and installing hardware to comply with indicated requirements.

B. Door and Frame Preparation: Division 08 Sections (Steel, Aluminum and Wood) doors and corresponding frames are to be prepared, reinforced and pre-wired (if applicable) to receive the installation of the specified electrified, monitoring, signaling and access control system hardware without additional in-field modifications.

1.7 WARRANTY

A. General Warranty: Reference Division 01, General Requirements. Special warranties specified in this Article shall not deprive Owner of other rights Owner may have under other provisions of the Contract Documents and shall be in addition to, and run concurrent with, other warranties made by Contractor under requirements of the Contract Documents.

1.8 MAINTENANCE SERVICE

A. Maintenance Tools and Instructions: Furnish a complete set of specialized tools and maintenance instructions as needed for Owner's continued adjustment, maintenance, and removal and replacement of door hardware.

PART 2 - PRODUCTS

2.1 SCHEDULED DOOR HARDWARE

A. Refer to "PART 3 – EXECUTION" for required specification sections.

PART 3 - EXECUTION

3.1 DOOR HARDWARE SETS

A. The door hardware sets represent the design intent and direction of the owner and architect. They are a guideline only and should not be considered a detailed hardware schedule. Discrepancies, conflicting hardware and missing items should be brought to the attention of the architect with corrections made prior to the bidding process. Omitted items not included in a hardware set should be scheduled with the appropriate additional hardware required for proper application and functionality.

B. The supplier is responsible for handing and sizing all products as listed in the door hardware sets. Quantities listed are for each pair of doors, or for each single door.

NOT FOR BIDDING

C. Products listed in the Door Hardware Sets must meet the requirements described in the specification sections noted.

1. Section 08 71 00 – Door Hardware.

D. Manufacturer's Abbreviations:

1. MK - McKinney
2. RO - Rockwood
3. SA - Sargent
4. SC - Schlage
5. NO - Norton
6. RF - Rixson
7. PE - Pemko

Hardware Schedule

Set: 1.0

NOT USED

Set: 2.0

Doors: B503/1, B507/1, C408/1

3 Hinge	TA2314 NRP	US32D	MK	087100
1 Storeroom Lock	30 10G04 LP	US26D	SA	087100
1 Cylinder	as required		SC	087100
1 Door Closer	(P)7500	689	NO	087100
1 Kick Plate	K1050 10" 4BE CSK	US32D	RO	087100
1 Overhead Stop	1-X36 (heavy duty concealed)	630	RF	087100
1 Threshold (thermal barrier)	273x3AFG MSES25SS		PE	087100
1 Gasketing (rigid jamb)	303AS TKSP8		PE	087100
1 Door Bottom	220AV TKSP8		PE	087100

Set: 3.0

Doors: P100/5, P102/1, P105/1

3 Hinge	TA2314 NRP	US32D	MK	087100
1 Storeroom Lock	30 10G04 LP	US26D	SA	087100
1 Cylinder	as required		SC	087100
1 Door Closer	(P)7500	689	NO	087100

NOT FOR BIDDING

1 Kick Plate	K1050 10" 4BE CSK	US32D	RO	087100
1 Overhead Stop	1-X36 (heavy duty concealed)	630	RF	087100
1 Threshold (thermal barrier)	273x3AFG MSES25SS		PE	087100
1 Gasketing (rigid jamb)	303AS TKSP8		PE	087100
1 Door Bottom	220AV TKSP8		PE	087100

Set: 4.0

Doors: C403/1

3 Hinge	TA2314 NRP	US32D	MK	087100
1 Office Lock	30 10G05 LP	US26D	SA	087100
1 Cylinder	as required		SC	087100
1 Door Closer	(P)7500	689	NO	087100
1 Kick Plate	K1050 10" 4BE CSK	US32D	RO	087100
1 Overhead Stop	1-X36 (heavy duty concealed)	630	RF	087100
1 Threshold (thermal barrier)	273x3AFG MSES25SS		PE	087100
1 Gasketing (rigid jamb)	303AS TKSP8		PE	087100
1 Door Bottom	220AV TKSP8		PE	087100

Set: 5.0

Doors: C404/1

4 Hinge	TA2314 NRP	US32D	MK	087100
1 Classroom Lock	30 10G37 LP	US26D	SA	087100
1 Cylinder	as required		SC	087100
1 Door Closer	(P)7500	689	NO	087100
1 Kick Plate	K1050 10" 4BE CSK	US32D	RO	087100
1 Overhead Stop	1-X36 (heavy duty concealed)	630	RF	087100
1 Threshold (thermal barrier)	273x43AFG MSES25SS		PE	087100
1 Gasketing (rigid jamb)	303AS TKSP8		PE	087100
1 Door Bottom	220AV TKSP8		PE	087100

Set: 6.0

Doors: C404/2

3 Hinge	TA2314 NRP	US32D	MK	087100
1 Classroom Lock	30 10G37 LP	US26D	SA	087100
1 Cylinder	as required		SC	087100

NOT FOR BIDDING

1 Door Closer	(P)7500	689	NO	087100
1 Kick Plate	K1050 10" 4BE CSK	US32D	RO	087100
1 Overhead Stop	1-X36 (heavy duty concealed)	630	RF	087100
1 Threshold (thermal barrier)	273x3AFG MSES25SS		PE	087100
1 Gasketing (rigid jamb)	303AS TKSP8		PE	087100
1 Door Bottom	220AV TKSP8		PE	087100

Set: 7.0

Doors: C400/1, C400/2

2 Hinge (heavy weight)	T4A3386 NRP	US32D	MK	087100
1 Storeroom Lock	30 10G04 LP	US26D	SA	087100
1 Cylinder	as required		SC	087100
1 Gasketing (rigid jamb)	303AS TKSP8		PE	087100
1 Door Bottom	220AV TKSP8		PE	087100

Set: 8.0

Doors: B504/1, B505/1, B506/1

3 Hinge	TA2314 NRP	US32D	MK	087100
1 Privacy Set	10U65 LP	US26D	SA	087100
1 Classroom Deadbolt	30 487	US26D	SA	087100
1 Cylinder	as required		SC	087100
1 Door Closer	(P)7500	689	NO	087100
1 Kick Plate	K1050 10" 4BE CSK	US32D	RO	087100
1 Overhead Stop	1-X36 (heavy duty concealed)	630	RF	087100
1 Threshold (thermal barrier)	273x3AFG MSES25SS		PE	087100
1 Gasketing (rigid jamb)	303AS TKSP8		PE	087100
1 Door Bottom	220AV TKSP8		PE	087100

Set: 9.0

Doors: B501/1, B502/1

3 Hinge (heavy weight)	T4A3386 NRP	US32D	MK	087100
1 Classroom Deadbolt	30 487	US26D	SA	087100
1 Cylinder	as required		SC	087100
1 Door Pull	111 x 70C	US32D	RO	087100
1 Push Plate	82 (half circle)	US32D	RO	087100
1 Door Closer	(P)7500	689	NO	087100

NOT FOR BIDDING

1 Kick Plate	K1050 10" 4BE CSK	US32D	RO	087100
1 Overhead Stop	1-X36 (heavy duty concealed)	630	RF	087100
1 Threshold (thermal barrier)	273x3AFG MSES25SS		PE	087100
1 Gasketing (rigid jamb)	303AS TKSP8		PE	087100
1 Door Bottom	220AV TKSP8		PE	087100

Set: 10.0

Doors: C400/1, C400/2

3 Hinge (heavy weight)	T4A3386 NRP	US32D	MK	087100
1 Classroom Deadbolt	30 487	US26D	SA	087100
1 Cylinder	as required		SC	087100
1 Push/Pull Bar	BF15747	US32D	RO	087100
1 Door Closer	CPS7500 (stop arm)	689	NO	087100
1 Overhead Stop	1-X36 (heavy duty concealed)	630	RF	087100
1 Threshold (thermal barrier)	273x3AFG MSES25SS		PE	087100
1 Gasketing (rigid jamb)	303AS TKSP8		PE	087100
1 Door Bottom	220AV TKSP8		PE	087100

Set: 11.0

Doors: P100/4

6 Hinge	TA2714	US26D	MK	087100
2 Flush Bolt	555/556 (as needed)	US26D	RO	087100
1 Dust Proof Strike	570	US26D	RO	087100
1 Storeroom Lock	30 10G04 LP	US26D	SA	087100
1 Cylinder	as required		SC	087100
1 Door Closer	CPS7500 (stop arm)	689	NO	087100
2 Kick Plate	K1050 10" 4BE CSK	US32D	RO	087100
1 Overhead Stop	1-X36 (surface)	630	RF	087100
1 Wall Stop	RM861	US26D	RO	087100

Set: 12.0

Doors: E306/1, E317/1, P100/3

3 Hinge	TA2714	US26D	MK	087100
1 Storeroom Lock	30 10G04 LP	US26D	SA	087100
1 Cylinder	as required		SC	087100
1 Door Closer	(P)7500	689	NO	087100

NOT FOR BIDDING

1 Kick Plate	K1050 10" 4BE CSK	US32D	RO	087100
1 Overhead Stop	1-X36 (heavy duty concealed)	630	RF	087100

Set: 13.0

Doors: C401/1, C405/1

3 Hinge	TA2714	US26D	MK	087100
1 Office Lock	30 10G05 LP	US26D	SA	087100
1 Cylinder	as required		SC	087100
1 Wall Stop	RM861	US26D	RO	087100
1 Coat Hook	RM802	US26D	RO	087100

Set: 14.0

Doors: C409/1

3 Hinge	TA2714	US26D	MK	087100
1 Classroom Lock	30 10G37 LP	US26D	SA	087100
1 Cylinder	as required		SC	087100
1 Kick Plate	K1050 10" 4BE CSK	US32D	RO	087100
1 Wall Stop	RM861	US26D	RO	087100

Set: 15.0

Doors: C411/1

3 Hinge	TA2714	US26D	MK	087100
1 Classroom Lock	30 10G37 LP	US26D	SA	087100
1 Cylinder	as required		SC	087100
1 Kick Plate	K1050 10" 4BE CSK	US32D	RO	087100
1 Overhead Stop	10-X36 (surface)	630	RF	087100

Set: 16.0

Doors: C410/1

3 Hinge	TA2714	US26D	MK	087100
1 Privacy Set	10U65 LP	US26D	SA	087100
1 Kick Plate	K1050 10" 4BE CSK	US32D	RO	087100
1 Wall Stop	RM861	US26D	RO	087100
1 Coat Hook	RM802	US26D	RO	087100

Set: 17.0

NOT FOR BIDDING

Doors: C406/1, C407/1

1 All Hardware	by others	

Set: 18.0

Doors: E201/1, E202/1, E302/1, E302/2, P100/1, P100/2, P100/6, P101/1, P105/2, P105/3

1 Cylinder	as required	SC 087100
1 All Hardware	by others	

END OF SECTION 087113

NOT FOR BIDDING

(PAGE LEFT BLANK)

NOT FOR BIDDING

SECTION 088000 - GLAZING

PART 1 - GENERAL

1.1 RELATED DOCUMENTS

A. Drawings and general provisions of the Contract, including General and Supplementary Conditions and Division 01 Specification Sections, apply to this section.

1.2 SUMMARY

A. Section includes:

1. Glass for windows, doors, and storefront framing.
2. Glazing sealants and accessories.

1.3 DEFINITIONS

A. Glass Manufacturers: Firms that produce primary glass, fabricated glass, or both, as defined in referenced glazing publications.

B. Glass Thicknesses: Indicated by thickness designations in millimeters according to ASTM C 1036.

C. IBC: International Building Code.

D. Interspace: Space between lites of an insulating-glass unit.

1.4 COORDINATION

A. Coordinate glazing channel dimensions to provide necessary bite on glass, minimum edge and face clearances, and adequate sealant thicknesses, with reasonable tolerances.

1.5 PREINSTALLATION MEETINGS

A. Preinstallation Conference: Conduct conference at Project site.

1. Review and finalize construction schedule and verify availability of materials, Installer's personnel, equipment, and facilities needed to make progress and avoid delays.
2. Review temporary protection requirements for glazing during and after installation.

1.6 ACTION SUBMITTALS

A. Product Data: For each type of product.

NOT FOR BIDDING

B. Glass Samples: For each type of ; 12 inches (300 mm) square.

1. Tinted glass.
2. Coated glass.
3. Laminated glass.
4. Insulating glass.

C. Glazing Accessory Samples: For sealants and colored spacers, in 12-inch (300 mm) lengths.

D. Glazing Schedule: List glass types and thicknesses for each size opening and location. Use same designations indicated on Drawings.

E. Delegated-Design Submittal: For glass indicated to comply with performance requirements and design criteria, including analysis data signed and sealed by the qualified professional engineer responsible for their preparation.

1.7 INFORMATIONAL SUBMITTALS

A. Qualification Data: For Installer, manufacturers of insulating-glass units with sputter-coated, low-E coatings and sealant testing agency.

B. Product Certificates: For glass.

C. Product Test Reports: For tinted glass, coated glass, insulating glass and glazing sealants, for tests performed by a qualified testing agency.

1. For glazing sealants, provide test reports based on testing current sealant formulations within previous 36-month period.

D. Preconstruction adhesion and compatibility test report.

E. Sample Warranties: For special warranties.

1.8 QUALITY ASSURANCE

A. Manufacturer Qualifications for Insulating-Glass Units with Sputter-Coated, Low-E Coatings: A qualified insulating glass manufacturer who is approved by coated-glass manufacturer.

B. Installer Qualifications: A qualified installer who employs glass installers for this Project who are certified under the National Glass Association's Certified Glass Installer Program.

C. Glass Testing Agency Qualifications: A qualified independent testing agency accredited according to the NFRC CAP 1 Certification Agency Program.

D. Sealant Testing Agency Qualifications: An independent testing agency qualified according to ASTM C 1021 to conduct the testing indicated.

NOT FOR BIDDING

1.9 DELIVERY, STORAGE, AND HANDLING

A. Protect glazing materials according to manufacturer's written instructions. Prevent damage to glass and glazing materials from condensation, temperature changes, direct exposure to sun, or other causes.

B. Comply with insulating-glass manufacturer's written instructions for venting and sealing units to avoid hermetic seal ruptures due to altitude change.

1.10 FIELD CONDITIONS

A. Environmental Limitations: Do not proceed with glazing when ambient and substrate temperature conditions are outside limits permitted by glazing material manufacturers and when glazing channel substrates are wet from rain, frost, condensation, or other causes.

1. Do not install glazing sealants when ambient and substrate temperature conditions are outside limits permitted by sealant manufacturer or are below 40 deg F (4.4 deg C).

1.11 WARRANTY

A. Manufacturer's Special Warranty for Coated-Glass Products: Manufacturer agrees to replace coated-glass units that deteriorate within specified warranty period. Deterioration of coated glass is defined as defects developed from normal use that are not attributed to glass breakage or to maintaining and cleaning coated glass contrary to manufacturer's written instructions. Defects include peeling, cracking, and other indications of deterioration in coating.

1. Warranty Period: 10 years from date of Substantial Completion.

B. Manufacturer's Special Warranty for Insulating Glass: Manufacturer agrees to replace insulating-glass units that deteriorate within specified warranty period. Deterioration of insulating glass is defined as failure of hermetic seal under normal use that is not attributed to glass breakage or to maintaining and cleaning insulating glass contrary to manufacturer's written instructions. Evidence of failure is the obstruction of vision by dust, moisture, or film on interior surfaces of glass.

1. Warranty Period: 10 years from date of Substantial Completion.

PART 2 - PRODUCTS

2.1 MANUFACTURERS

A. Manufacturers: Subject to compliance with requirements, available manufacturers offering products that may be incorporated into the Work include, but are not limited to the following:

1. AGC Glass Company North America, Inc.
2. Cardinal Glass Industries.
3. Cristacurva.
4. Dlubak Corporation.

NOT FOR BIDDING

5. Gardner Glass, Inc.
6. GGI; General Glass International.
7. Glasswerks LA, Inc.
8. GTI; Glaz-Tech Industries.
9. Guardian Industries Corp.; SunGuard.
10. Hartung Glass Industries.
11. JE Berkowitz, LP.
12. Northwestern Industries, Inc.
13. Oldcastle BuildingEnvelope™.
14. Pilkington North America.
15. PPG Industries, Inc.
16. Schott North America, Inc.
17. Tecnoglass.
18. Trulite Glass & Aluminum Solutions, LLC.
19. Vetrotech Saint-Gobain.
20. Viracon, Inc.

B. Source Limitations for Glass: Obtain from single source from single manufacturer for each glass type.

1. Obtain tinted glass from single source from single manufacturer.
2. Obtain reflective-coated glass from single source from single manufacturer.

C. Source Limitations for Glazing Accessories: Obtain from single source from single manufacturer for each product and installation method.

2.2 PERFORMANCE REQUIREMENTS

A. General: Installed glazing systems shall withstand normal thermal movement and wind and impact loads (where applicable) without failure, including loss or glass breakage attributable to the following: defective manufacture, fabrication, or installation; failure of sealants or gaskets to remain watertight and airtight; deterioration of glazing materials; or other defects in construction.

B. Delegated Design: Engage a qualified professional engineer, as defined in Section 014000 "Quality Requirements," to design glazing.

C. Structural Performance: Glazing shall withstand the following design loads within limits and under conditions indicated determined according to the IBC and ASTM E 1300.

1. Design Wind Pressures: As indicated on Drawings.
2. Design Wind Pressures: Determine design wind pressures applicable to Project according to ASCE/SEI 7, based on heights above grade indicated on Drawings.

   a. Wind Design Data: As indicated on Drawings.
   b. Basic Wind Speed: As indicated on Drawings.
   c. Importance Factor: [As indicated on Drawings
   d. Exposure Category: As indicated on Drawings.

3. Design Snow Loads: As indicated on Drawings.

NOT FOR BIDDING

4. Maximum Lateral Deflection: For glass supported on all four edges, limit center-of-glass deflection at design wind pressure to not more than 1/50 times the short-side length or 1 inch (25 mm), whichever is less.
5. Differential Shading: Design glass to resist thermal stresses induced by differential shading within individual glass lites.

D. Windborne-Debris-Impact Resistance: Exterior glazing shall comply with basic-protection testing requirements in ASTM E 1996 for Wind Zone 2 when tested according to ASTM E 1886. Test specimens shall be no smaller in width and length than glazing indicated for use on Project and shall be installed in same manner as glazing indicated for use on Project.

1. Large-Missile Test: For glazing located within 30 feet (9.1 m) of grade.
2. Small-Missile Test: For glazing located more than 30 feet (9.1 m) above grade.

E. Safety Glazing: Where safety glazing is indicated, provide glazing that complies with 16 CFR 1201, Category II.

F. Thermal and Optical Performance Properties: Provide glass with performance properties specified, as indicated in manufacturer's published test data, based on procedures indicated below:

1. For monolithic-glass lites, properties are based on units with lites 6 mm.
2. For laminated-glass lites, properties are based on products of construction indicated.
3. For insulating-glass units, properties are based on units of thickness indicated for overall unit and for each lite.
4. U-Factors: Center-of-glazing values, according to NFRC 100 and based on LBL's WINDOW 5.2 computer program, expressed as Btu/sq. ft. x h x deg F (W/sq. m x K).
5. Solar Heat-Gain Coefficient and Visible Transmittance: Center-of-glazing values, according to NFRC 200 and based on LBL's WINDOW 5.2 computer program.
6. Visible Reflectance: Center-of-glazing values, according to NFRC 300.

2.3 GLASS PRODUCTS, GENERAL

A. Glazing Publications: Comply with published recommendations of glass product manufacturers and organizations below unless more stringent requirements are indicated. See these publications for glazing terms not otherwise defined in this Section or in referenced standards.

1. GANA Publications: "Laminated Glazing Reference Manual" and "Glazing Manual."
2. AAMA Publications: AAMA GDSG-1, "Glass Design for Sloped Glazing," and AAMA TIR-A7, "Sloped Glazing Guidelines."
3. IGMA Publication for Sloped Glazing: IGMA TB-3001, "Guidelines for Sloped Glazing."
4. IGMA Publication for Insulating Glass: SIGMA TM-3000, "North American Glazing Guidelines for Sealed Insulating Glass Units for Commercial and Residential Use."

B. Safety Glazing Labeling: Where safety glazing is indicated, permanently mark glazing with certification label of the SGCC or another certification agency acceptable to authorities having jurisdiction or manufacturer. Label shall indicate manufacturer's name, type of glass, thickness, and safety glazing standard with which glass complies.

NOT FOR BIDDING

C. Insulating-Glass Certification Program: Permanently marked either on spacers or on at least one component lite of units with appropriate certification label of IgCC.

D. Thickness: Where glass thickness is indicated, it is a minimum. Provide glass that complies with performance requirements and is not less than the thickness indicated.

1. Minimum Glass Thickness for Exterior Lites: 6 mm.
2. Thickness of Tinted Glass: Provide same thickness for each tint color indicated throughout Project.

E. Strength: Where annealed float glass is indicated, provide annealed float glass, heat-strengthened float glass, or fully tempered float glass as needed to comply with "Performance Requirements" Article. Where heat-strengthened float glass is indicated, provide heat-strengthened float glass or fully tempered float glass as needed to comply with "Performance Requirements" Article. Where fully tempered float glass is indicated, provide fully tempered float glass.

2.4 GLASS PRODUCTS

A. Clear Annealed Float Glass: ASTM C 1036, Type I, Class 1 (clear), Quality-Q3.

B. Tinted Annealed Float Glass: ASTM C 1036, Type I, Class 2 (tinted), Quality-Q3.

C. Fully Tempered Float Glass: ASTM C 1048, Kind FT (fully tempered), Condition A (uncoated) unless otherwise indicated, Type I, Class 1 (clear) or Class 2 (tinted) as indicated, Quality-Q3.

1. Fabrication Process: By horizontal (roller-hearth) process with roll-wave distortion parallel to bottom edge of glass as installed unless otherwise indicated.

D. Ceramic-Coated Vision Glass: ASTM C 1048, Condition C, Type I, Class 1 (clear) or Class 2 (tinted) as indicated, Quality-Q3; and complying with Specification No. 95-1-31 in GANA's "Engineering Standards Manual."

2.5 LAMINATED GLASS

A. Laminated Glass: ASTM C 1172. Use materials that have a proven record of no tendency to bubble, discolor, or lose physical and mechanical properties after fabrication and installation.

1. Construction: Laminate glass with polyvinyl butyral interlayer or cast-in-place and cured-transparent-resin interlayer to comply with interlayer manufacturer's written instructions.
2. Interlayer Thickness: Provide thickness not less than that indicated and as needed to comply with requirements.
3. Interlayer Color: Clear unless otherwise indicated.

2.6 INSULATING GLASS

A. Insulating-Glass Units: Factory-assembled units consisting of sealed lites of glass separated by a dehydrated interspace, qualified according to ASTM E 2190.

NOT FOR BIDDING

1. Sealing System: Dual seal, with manufacturer's standard primary and secondary sealants.
2. Spacer: Manufacturer's standard spacer material and construction.
3. Desiccant: Molecular sieve or silica gel, or a blend of both.

2.7 GLAZING SEALANTS

A. General:

1. Compatibility: Compatible with one another and with other materials they contact, including glass products, seals of insulating-glass units, and glazing channel substrates, under conditions of service and application, as demonstrated by sealant manufacturer based on testing and field experience.
2. Suitability: Comply with sealant and glass manufacturers' written instructions for selecting glazing sealants suitable for applications indicated and for conditions existing at time of installation.
3. Colors of Exposed Glazing Sealants: As selected by Architect from manufacturer's full range.

2.8 GLAZING TAPES

A. Back-Bedding Mastic Glazing Tapes: Preformed, butyl-based, 100 percent solids elastomeric tape; nonstaining and nonmigrating in contact with nonporous surfaces; with or without spacer rod as recommended in writing by tape and glass manufacturers for application indicated; and complying with ASTM C 1281 and AAMA 800 for products indicated below:

1. AAMA 804.3 tape, where indicated.
2. AAMA 806.3 tape, for glazing applications in which tape is subject to continuous pressure.
3. AAMA 807.3 tape, for glazing applications in which tape is not subject to continuous pressure.

B. Expanded Cellular Glazing Tapes: Closed-cell, PVC foam tapes; factory coated with adhesive on both surfaces; and complying with AAMA 800 for the following types:

1. AAMA 810.1, Type 1, for glazing applications in which tape acts as the primary sealant.
2. AAMA 810.1, Type 2, for glazing applications in which tape is used in combination with a full bead of liquid sealant.

2.9 MISCELLANEOUS GLAZING MATERIALS

A. General: Provide products of material, size, and shape complying with referenced glazing standard, with requirements of manufacturers of glass and other glazing materials for applications indicated, and with a proven record of compatibility with surfaces contacted in installation.

B. Cleaners, Primers, and Sealers: Types recommended by sealant or gasket manufacturer.

NOT FOR BIDDING

C. Setting Blocks: Elastomeric material with a Shore, Type A durometer hardness of 85, plus or minus 5.

D. Spacers: Elastomeric blocks or continuous extrusions of hardness required by glass manufacturer to maintain glass lites in place for installation indicated.

E. Edge Blocks: Elastomeric material of hardness needed to limit glass lateral movement (side walking).

F. Cylindrical Glazing Sealant Backing: ASTM C 1330, Type O (open-cell material), of size and density to control glazing sealant depth and otherwise produce optimum glazing sealant performance.

2.10 FABRICATION OF GLAZING UNITS

A. Fabricate glazing units in sizes required to fit openings indicated for Project, with edge and face clearances, edge and surface conditions, and bite complying with written instructions of product manufacturer and referenced glazing publications, to comply with system performance requirements.

1. Allow for thermal movements from ambient and surface temperature changes acting on glass framing members and glazing components.

a. Temperature Change: 120 deg F (65 deg C), ambient; 180 deg F (100 deg C), material surfaces.

B. Clean-cut or flat-grind vertical edges of butt-glazed monolithic lites to produce square edges with slight chamfers at junctions of edges and faces.

C. Grind smooth and polish exposed glass edges and corners.

PART 3 - EXECUTION

3.1 EXAMINATION

A. Examine framing, glazing channels, and stops, with Installer present, for compliance with the following:

1. Manufacturing and installation tolerances, including those for size, squareness, and offsets at corners.
2. Presence and functioning of weep systems.
3. Minimum required face and edge clearances.
4. Effective sealing between joints of glass-framing members.

B. Proceed with installation only after unsatisfactory conditions have been corrected.

NOT FOR BIDDING

3.2 PREPARATION

A. Clean glazing channels and other framing members receiving glass immediately before glazing. Remove coatings not firmly bonded to substrates.

B. Examine glazing units to locate exterior and interior surfaces. Label or mark units as needed so that exterior and interior surfaces are readily identifiable. Do not use materials that leave visible marks in the completed Work.

3.3 GLAZING, GENERAL

A. Comply with combined written instructions of manufacturers of glass, sealants, gaskets, and other glazing materials, unless more stringent requirements are indicated, including those in referenced glazing publications.

B. Protect glass edges from damage during handling and installation. Remove damaged glass from Project site and legally dispose of off Project site. Damaged glass includes glass with edge damage or other imperfections that, when installed, could weaken glass, impair performance, or impair appearance.

C. Apply primers to joint surfaces where required for adhesion of sealants, as determined by preconstruction testing.

D. Install setting blocks in sill rabbets, sized and located to comply with referenced glazing publications, unless otherwise required by glass manufacturer. Set blocks in thin course of compatible sealant suitable for heel bead.

E. Do not exceed edge pressures stipulated by glass manufacturers for installing glass lites.

F. Provide spacers for glass lites where length plus width is larger than 50 inches (1270 mm).

1. Locate spacers directly opposite each other on both inside and outside faces of glass. Install correct size and spacing to preserve required face clearances, unless gaskets and glazing tapes are used that have demonstrated ability to maintain required face clearances and to comply with system performance requirements.
2. Provide 1/8-inch (3-mm) minimum bite of spacers on glass and use thickness equal to sealant width. With glazing tape, use thickness slightly less than final compressed thickness of tape.

G. Provide edge blocking where indicated or needed to prevent glass lites from moving sideways in glazing channel, as recommended in writing by glass manufacturer and according to requirements in referenced glazing publications.

H. Set glass lites in each series with uniform pattern, draw, bow, and similar characteristics.

I. Set glass lites with proper orientation so that coatings face exterior or interior as specified.

J. Where wedge-shaped gaskets are driven into one side of channel to pressurize sealant or gasket on opposite side, provide adequate anchorage so gasket cannot walk out when installation is subjected to movement.

NOT FOR BIDDING

K. Square cut wedge-shaped gaskets at corners and install gaskets in a manner recommended by gasket manufacturer to prevent corners from pulling away; seal corner joints and butt joints with sealant recommended by gasket manufacturer.

3.4 TAPE GLAZING

A. Position tapes on fixed stops so that, when compressed by glass, their exposed edges are flush with or protrude slightly above sightline of stops.

B. Install tapes continuously, but not necessarily in one continuous length. Do not stretch tapes to make them fit opening.

C. Cover vertical framing joints by applying tapes to heads and sills first, then to jambs. Cover horizontal framing joints by applying tapes to jambs, then to heads and sills.

D. Place joints in tapes at corners of opening with adjoining lengths butted together, not lapped. Seal joints in tapes with compatible sealant approved by tape manufacturer.

E. Do not remove release paper from tape until right before each glazing unit is installed.

F. Apply heel bead of elastomeric sealant.

G. Center glass lites in openings on setting blocks, and press firmly against tape by inserting dense compression gaskets formed and installed to lock in place against faces of removable stops. Start gasket applications at corners and work toward centers of openings.

H. Apply cap bead of elastomeric sealant over exposed edge of tape.

3.5 GASKET GLAZING (DRY)

A. Cut compression gaskets to lengths recommended by gasket manufacturer to fit openings exactly, with allowance for stretch during installation.

B. Insert soft compression gasket between glass and frame or fixed stop so it is securely in place with joints miter cut and bonded together at corners.

C. Installation with Drive-in Wedge Gaskets: Center glass lites in openings on setting blocks, and press firmly against soft compression gasket by inserting dense compression gaskets formed and installed to lock in place against faces of removable stops. Start gasket applications at corners and work toward centers of openings. Compress gaskets to produce a weathertight seal without developing bending stresses in glass. Seal gasket joints with sealant recommended by gasket manufacturer.

D. Installation with Pressure-Glazing Stops: Center glass lites in openings on setting blocks, and press firmly against soft compression gasket. Install dense compression gaskets and pressure-glazing stops, applying pressure uniformly to compression gaskets. Compress gaskets to produce a weathertight seal without developing bending stresses in glass. Seal gasket joints with sealant recommended by gasket manufacturer.

E. Install gaskets so they protrude past face of glazing stops.

NOT FOR BIDDING

3.6 SEALANT GLAZING (WET)

A. Install continuous spacers, or spacers combined with cylindrical sealant backing, between glass lites and glazing stops to maintain glass face clearances and to prevent sealant from extruding into glass channel and blocking weep systems until sealants cure. Secure spacers or spacers and backings in place and in position to control depth of installed sealant relative to edge clearance for optimum sealant performance.

B. Force sealants into glazing channels to eliminate voids and to ensure complete wetting or bond of sealant to glass and channel surfaces.

C. Tool exposed surfaces of sealants to provide a substantial wash away from glass.

3.7 CLEANING AND PROTECTION

A. Immediately after installation remove nonpermanent labels and clean surfaces.

B. Protect glass from contact with contaminating substances resulting from construction operations. Examine glass surfaces adjacent to or below exterior concrete and other masonry surfaces at frequent intervals during construction, but not less than once a month, for buildup of dirt, scum, alkaline deposits, or stains.

1. If, despite such protection, contaminating substances do come into contact with glass, remove substances immediately as recommended in writing by glass manufacturer. Remove and replace glass that cannot be cleaned without damage to coatings.

C. Remove and replace glass that is damaged during construction period.

D. Wash glass on both exposed surfaces not more than four days before date scheduled for inspections that establish date of Substantial Completion. Wash glass as recommended in writing by glass manufacturer.

3.8 MONOLITHIC GLASS SCHEDULE

A. Glass Type GL-1: Clear float glass.

1. Minimum Thickness: 6 mm.

B. Glass Type GL-2: Clear fully tempered float glass.

1. Minimum Thickness: 6 mm.
2. Safety glazing required.

3.9 LAMINATED GLASS SCHEDULE

A. Glass Type GL-3: Clear laminated glass with two plies of fully tempered float glass.

1. Basis-of-Design Product: Basis-of-Design Product: Subject to compliance with requirements, provide PPG or comparable product by one of the following:

NOT FOR BIDDING

a. LOF
b. AFG Industries, Inc.
c. J.B. Berkowski
d. Cardinal Glass Industries.
e. Pilkington North America.

2. Minimum Thickness of Each Glass Ply: 3 mm.
3. Interlayer Thickness: 0.030 inch (0.76 mm).
4. Safety glazing required.

3.10 INSULATING GLASS SCHEDULE

A. Glass Type GL-4: Low-E-coated, clear insulating glass.

1. Basis-of-Design Product: Basis-of-Design Product: Subject to compliance with requirements, provide PPG Solarban 60 or comparable product by one of the following:

a. LOF
b. AFG Industries, Inc.; Spotless Ti.
c. J.B. Berkowski
d. Cardinal Glass Industries; LoE2 Plus.
e. Pilkington North America; Activ.

2. Overall Unit Thickness: 1 inch (25 mm).
3. Minimum Thickness of Each Glass Lite: 6 mm.
4. Outdoor Lite: Float glass.
5. Interspace Content: Argon.
6. Indoor Lite: Float glass.
7. Low-E Coating: Sputtered on second surface.
8. Winter Nighttime U-Factor: 0.25 maximum.
9. Summer Daytime U-Factor: 0.27 maximum.
10. Visible Light Transmittance: 70 percent minimum.
11. Solar Heat Gain Coefficient: 0.38 maximum.

B. Glass Type GL-5: Low-E-coated, clear tempered insulating glass.

1. Basis-of-Design Product: Basis-of-Design Product: Subject to compliance with requirements, provide PPG Solarban 60 or comparable product by one of the following:

a. LOF
b. AFG Industries, Inc.; Spotless Ti.
c. J.B. Berkowski
d. Cardinal Glass Industries; LoE2 Plus.
e. Pilkington North America; Activ.

2. Overall Unit Thickness: 1 inch (25 mm).
3. Minimum Thickness of Each Glass Lite: 6 mm.
4. Outdoor Lite: Fully tempered float glass.
5. Interspace Content: Argon.
6. Indoor Lite: Fully tempered float glass.

NOT FOR BIDDING

7. Low-E Coating: Sputtered on second surface.
8. Winter Nighttime U-Factor: 0.29 maximum.
9. Summer Daytime U-Factor: 0.27 maximum.
10. Visible Light Transmittance: 70 percent minimum.
11. Solar Heat Gain Coefficient: 0.38 maximum.
12. Safety glazing required.

END OF SECTION 088000

NOT FOR BIDDING

(PAGE LEFT BLANK)

NOT FOR BIDDING

SECTION 092900 - GYPSUM BOARD

PART 1 - GENERAL

1.1 RELATED DOCUMENTS

A. Drawings and general provisions of the Contract, including General and Supplementary Conditions and Division 01 Specification Sections, apply to this section.

1.2 SUMMARY

A. Section Includes:

1. Interior gypsum board.
2. Tile backing panels.

B. Related Requirements:

1. Division 06 Section "Sheathing" for gypsum sheathing for exterior walls.
2. Division 09 Section "Non-Structural Metal Framing" for non-structural framing and suspension systems that support gypsum board panels.
3. Division 09 Section "Tiling" for cementitious backer units installed as substrates for ceramic tile.

1.3 ACTION SUBMITTALS

A. Product Data: For each type of product.

B. Samples: For the following products:

1. Trim Accessories: Full-size Sample in 12-inch- (300-mm-) long length for each trim accessory indicated.

1.4 QUALITY ASSURANCE

A. Mockups: Before beginning gypsum board installation, install mockups of at least 100 sq. ft. (9 sq. m) in surface area to demonstrate aesthetic effects and set quality standards for materials and execution.

1. Install mockups for the following:

a. Each level of gypsum board finish indicated for use in exposed locations.
b. Each texture finish indicated.

2. Apply or install final decoration indicated, including painting and wallcoverings, on exposed surfaces for review of mockups.

NOT FOR BIDDING

3. Simulate finished lighting conditions for review of mockups.
4. Subject to compliance with requirements, approved mockups may become part of the completed Work if undisturbed at time of Substantial Completion.

1.5 DELIVERY, STORAGE AND HANDLING

A. Store materials inside under cover and keep them dry and protected against weather, condensation, direct sunlight, construction traffic, and other potential causes of damage. Stack panels flat and supported on risers on a flat platform to prevent sagging.

1.6 FIELD CONDITIONS

A. Environmental Limitations: Comply with ASTM C 840 requirements or gypsum board manufacturer's written recommendations, whichever are more stringent.

B. Do not install paper-faced gypsum panels until installation areas are enclosed and conditioned.

C. Do not install panels that are wet, those that are moisture damaged, and those that are mold damaged.

1. Indications that panels are wet or moisture damaged include, but are not limited to, discoloration, sagging, or irregular shape.
2. Indications that panels are mold damaged include, but are not limited to, fuzzy or splotchy surface contamination and discoloration.

PART 2 - PRODUCTS

2.1 PERFORMANCE REQUIREMENTS

A. Fire-Resistance-Rated Assemblies: For fire-resistance-rated assemblies, provide materials and construction identical to those tested in assembly indicated according to ASTM E 119 by an independent testing agency.

B. STC-Rated Assemblies: For STC-rated assemblies, provide materials and construction identical to those tested in assembly indicated according to ASTM E 90 and classified according to ASTM E 413 by an independent testing agency.

C. Low-Emitting Materials: For ceiling and wall assemblies, provide materials and construction identical to those tested in assembly and complying with the testing and product requirements of the California Department of Health Services' "Standard Practice for the Testing of Volatile Organic Emissions from Various Sources Using Small-Scale Environmental Chambers."

2.2 GYPSUM BOARD, GENERAL

A. Size: Provide maximum lengths and widths available that will minimize joints in each area and that correspond with support system indicated.

NOT FOR BIDDING

2.3 INTERIOR GYPSUM BOARD

A. Manufacturers: Subject to compliance with requirements, available manufacturers offering products that may be incorporated into the Work include, but are not limited to, the following:

1. American Gypsum.
2. CertainTeed Corp.
3. Georgia-Pacific Gypsum LLC.
4. Lafarge North America Inc.
5. National Gypsum Company.
6. PABCO Gypsum.
7. Temple-Inland.
8. USG Corporation.

B. Gypsum Board, Type X: ASTM C 1396/C 1396M.

1. Thickness: 5/8 inch (15.9 mm).
2. Long Edges: Tapered and featured (rounded or beveled) for prefilling.

C. Gypsum Ceiling Board: ASTM C 1396/C 1396M.

1. Thickness: 1/2 inch (12.7 mm).
2. Long Edges: Tapered.

D. Moisture- and Mold-Resistant Gypsum Board: ASTM C 1396/C 1396M. With moisture- and mold-resistant core and paper surfaces.

1. Core: 5/8 inch (15.9 mm), Type X.
2. Long Edges: Tapered.
3. Mold Resistance: ASTM D 3273, score of 10.
4. Locations: Rooms 103, 104, 106, 107, 109, 110, 106, 146, and northwest wall of 141.

2.4 TRIM ACCESSORIES

A. Interior Trim: ASTM C 1047.

1. Material: Galvanized or aluminum-coated steel sheet, rolled zinc, plastic, or paper-faced galvanized steel sheet.
2. Shapes:

a. Cornerbead.
b. Bullnose bead.
c. LC-Bead: J-shaped; exposed long flange receives joint compound.
d. L-Bead: L-shaped; exposed long flange receives joint compound.
e. J-Bead: J-shaped; exposed short flange does not receive joint compound.
f. Expansion (control) joint.
g. Curved-Edge Cornerbead: With notched or flexible flanges.

B. Aluminum Trim: Extruded accessories of profiles and dimensions indicated.

NOT FOR BIDDING

1. Manufacturers: Subject to compliance with requirements, available manufacturers offering products that may be incorporated into the Work include, but are not limited to, the following:

   a. Fry Reglet Corp.
   b. Gordon, Inc.
   c. Pittcon Industries.

2. Aluminum: Alloy and temper with not less than the strength and durability properties of ASTM B 221 (ASTM B 221M), Alloy 6063-T5.
3. Finish: Corrosion-resistant primer compatible with joint compound and finish materials specified.

2.5 JOINT TREATMENT MATERIALS

A. General: Comply with ASTM C 475/C 475M.

B. Joint Tape:

1. Interior Gypsum Board: Paper.
2. Exterior Gypsum Soffit Board: Paper.
3. Glass-Mat Gypsum Sheathing Board: 10 by 10 glass mesh.
4. Tile Backing Panels: As recommended by panel manufacturer.

C. Joint Compound for Interior Gypsum Board: For each coat use formulation that is compatible with other compounds applied on previous or for successive coats.

1. Prefilling: At open joints, rounded or beveled panel edges, and damaged surface areas, use setting-type taping compound.
2. Embedding and First Coat: For embedding tape and first coat on joints, fasteners, and trim flanges, use drying-type, all-purpose compound.

   a. Use setting-type compound for installing paper-faced metal trim accessories.

3. Fill Coat: For second coat, use drying-type, all-purpose compound.
4. Finish Coat: For third coat, use drying-type, all-purpose compound.

D. Joint Compound for Tile Backing Panels:

1. Glass-Mat, Water-Resistant Backing Panel: As recommended by backing panel manufacturer.
2. Cementitious Backer Units: As recommended by backer unit manufacturer.
3. Water-Resistant Gypsum Backing Board: Use setting-type taping compound and setting-type, sandable topping compound.

2.6 AUXILIARY MATERIALS

A. General: Provide auxiliary materials that comply with referenced installation standards and manufacturer's written recommendations.

NOT FOR BIDDING

B. Laminating Adhesive: Adhesive or joint compound recommended for directly adhering gypsum panels to continuous substrate.

1. Laminating adhesive shall have a VOC content of 50 g/L or less when calculated according to 40 CFR 59, Subpart D (EPA Method 24).

C. Steel Drill Screws: ASTM C 1002, unless otherwise indicated.

1. Use screws complying with ASTM C 954 for fastening panels to steel members from 0.033 to 0.112 inch (0.84 to 2.84 mm) thick.
2. For fastening cementitious backer units, use screws of type and size recommended by panel manufacturer.

D. Sound Attenuation Blankets: ASTM C 665, Type I (blankets without membrane facing) produced by combining thermosetting resins with mineral fibers manufactured from glass, slag wool, or rock wool.

1. Fire-Resistance-Rated Assemblies: Comply with mineral-fiber requirements of assembly.

E. Acoustical Joint Sealant: Manufacturer's standard nonsag, paintable, nonstaining latex sealant complying with ASTM C 834. Product effectively reduces airborne sound transmission through perimeter joints and openings in building construction as demonstrated by testing representative assemblies according to ASTM E 90.

1. Products: Subject to compliance with requirements, available products that may be incorporated into the Work include, but are not limited to, the following:

a. Accumetric LLC; BOSS 924 Acoustical Sound Sealant.
b. Grabber Construction Products; Acoustical Sealant GSC.
c. Pecora Corporation; AC-20 FTR.
d. Specified Technologies, Inc.; Smoke N Sound Acoustical Sealant.
e. USG Corporation; SHEETROCK Acoustical Sealant.

2. Acoustical joint sealant shall have a VOC content of 250 g/L or less when calculated according to 40 CFR 59, Subpart D (EPA Method 24).
3. Acoustical joint sealant shall comply with the testing and product requirements of the California Department of Health Services' "Standard Practice for the Testing of Volatile Organic Emissions from Various Sources Using Small-Scale Environmental Chambers."

F. Thermal Insulation: As specified in Division 07 Section "Thermal Insulation."

G. Vapor Retarder: As specified in Division 07 Section "Thermal Insulation."

PART 3 - EXECUTION

3.1 EXAMINATION

A. Examine areas and substrates including welded hollow-metal frames and framing, with Installer present, for compliance with requirements and other conditions affecting performance.

NOT FOR BIDDING

B. Examine panels before installation. Reject panels that are wet, moisture damaged, and mold damaged.

C. Proceed with installation only after unsatisfactory conditions have been corrected.

3.2 APPLYING AND FINISHING PANELS, GENERAL

A. Comply with ASTM C 840.

B. Install ceiling panels across framing to minimize the number of abutting end joints and to avoid abutting end joints in central area of each ceiling. Stagger abutting end joints of adjacent panels not less than one framing member.

C. Install panels with face side out. Butt panels together for a light contact at edges and ends with not more than 1/16 inch (1.5 mm) of open space between panels. Do not force into place.

D. Locate edge and end joints over supports, except in ceiling applications where intermediate supports or gypsum board back-blocking is provided behind end joints. Do not place tapered edges against cut edges or ends. Stagger vertical joints on opposite sides of partitions. Do not make joints other than control joints at corners of framed openings.

E. Form control and expansion joints with space between edges of adjoining gypsum panels.

F. Cover both faces of support framing with gypsum panels in concealed spaces (above ceilings, etc.), except in chases braced internally.

1. Unless concealed application is indicated or required for sound, fire, air, or smoke ratings, coverage may be accomplished with scraps of not less than 8 sq. ft. (0.7 sq. m) in area.
2. Fit gypsum panels around ducts, pipes, and conduits.
3. Where partitions intersect structural members projecting below underside of floor/roof slabs and decks, cut gypsum panels to fit profile formed by structural members; allow 1/4- to 3/8-inch- (6.4- to 9.5-mm-) wide joints to install sealant.

G. Isolate perimeter of gypsum board applied to non-load-bearing partitions at structural abutments, except floors. Provide 1/4- to 1/2-inch- (6.4- to 12.7-mm-) wide spaces at these locations and trim edges with edge trim where edges of panels are exposed. Seal joints between edges and abutting structural surfaces with acoustical sealant.

H. Attachment to Steel Framing: Attach panels so leading edge or end of each panel is attached to open (unsupported) edges of stud flanges first.

I. Wood Framing: Install gypsum panels over wood framing, with floating internal corner construction. Do not attach gypsum panels across the flat grain of wide-dimension lumber, including floor joists and headers. Float gypsum panels over these members or provide control joints to counteract wood shrinkage.

J. STC-Rated Assemblies: Seal construction at perimeters, behind control joints, and at openings and penetrations with a continuous bead of acoustical sealant. Install acoustical sealant at both faces of partitions at perimeters and through penetrations. Comply with ASTM C 919 and with

NOT FOR BIDDING

manufacturer's written recommendations for locating edge trim and closing off sound-flanking paths around or through assemblies, including sealing partitions above acoustical ceilings.

K. Install sound attenuation blankets before installing gypsum panels unless blankets are readily installed after panels have been installed on one side.

3.3 APPLYING INTERIOR GYPSUM BOARD

A. Install interior gypsum board in the following locations:

1. Wallboard Type: As indicated on Drawings.
2. Type X: As indicated on Drawings.
3. Ceiling Type: As indicated on Drawings.
4. Moisture- and Mold-Resistant Type: As indicated on Drawings.
5. Glass-Mat Interior Type: As indicated on Drawings.
6. Acoustically Enhanced Type: As indicated on Drawings.

B. Single-Layer Application:

1. On ceilings, apply gypsum panels before wall/partition board application to greatest extent possible and at right angles to framing unless otherwise indicated.
2. On partitions/walls, apply gypsum panels horizontally (perpendicular to framing) unless otherwise indicated or required by fire-resistance-rated assembly, and minimize end joints.

   a. Stagger abutting end joints not less than one framing member in alternate courses of panels.
   b. At stairwells and other high walls, install panels horizontally unless otherwise indicated or required by fire-resistance-rated assembly.

3. On Z-furring members, apply gypsum panels vertically (parallel to framing) with no end joints. Locate edge joints over furring members.
4. Fastening Methods: Apply gypsum panels to supports with steel drill screws.

3.4 APPLYING TILE BACKING PANELS

A. Glass-Mat, Water-Resistant Backing Panels: Comply with manufacturer's written installation instructions and install as. Install with 1/4-inch (6.4-mm) gap where panels abut other construction or penetrations.

B. Water-Resistant Backing Board: Install where indicated with 1/4-inch (6.4-mm) gap where panels abut other construction or penetrations.

C. Where tile backing panels abut other types of panels in same plane, shim surfaces to produce a uniform plane across panel surfaces.

NOT FOR BIDDING

3.5 INSTALLING TRIM ACCESSORIES

A. General: For trim with back flanges intended for fasteners, attach to framing with same fasteners used for panels. Otherwise, attach trim according to manufacturer's written instructions.

B. Control Joints: Install control joints according to ASTM C 840 and in specific locations approved by Architect for visual effect.

C. Interior Trim: Install in the following locations:

1. Cornerbead: Use at outside corners.
2. LC-Bead: Use at exposed panel edges.
3. Curved-Edge Cornerbead: Use at curved openings.

3.6 FINISHING GYPSUM BOARD

A. General: Treat gypsum board joints, interior angles, edge trim, control joints, penetrations, fastener heads, surface defects, and elsewhere as required to prepare gypsum board surfaces for decoration. Promptly remove residual joint compound from adjacent surfaces.

B. Prefill open joints, rounded or beveled edges, and damaged surface areas.

C. Apply joint tape over gypsum board joints, except for trim products specifically indicated as not intended to receive tape.

D. Gypsum Board Finish Levels: Finish panels to levels indicated below and according to ASTM C 840:

1. Level 1: Ceiling plenum areas, concealed areas, and where indicated.
2. Level 2: Panels that are substrate for tile.
3. Level 3: Where indicated on Drawings.
4. Level 4: At panel surfaces that will be exposed to view unless otherwise indicated.

   a. Primer and its application to surfaces are specified in other Division 09 Sections.

E. Glass-Mat Gypsum Sheathing Board: Finish according to manufacturer's written instructions for use as exposed soffit board.

F. Glass-Mat Faced Panels: Finish according to manufacturer's written instructions.

G. Cementitious Backer Units: Finish according to manufacturer's written instructions.

3.7 PROTECTION

A. Protect adjacent surfaces from drywall compound and promptly remove from floors and other non-drywall surfaces. Repair surfaces stained, marred, or otherwise damaged during drywall application.

NOT FOR BIDDING

B. Protect installed products from damage from weather, condensation, direct sunlight, construction, and other causes during remainder of the construction period.

C. Remove and replace panels that are wet, moisture damaged, and mold damaged.

1. Indications that panels are wet or moisture damaged include, but are not limited to, discoloration, sagging, or irregular shape.
2. Indications that panels are mold damaged include, but are not limited to, fuzzy or splotchy surface contamination and discoloration.

END OF SECTION 092900

NOT FOR BIDDING

SECTION 095113 - ACOUSTICAL PANEL CEILINGS

PART 1 - GENERAL

1.1 RELATED DOCUMENTS

A. Drawings and general provisions of the Contract, including General and Supplementary Conditions and Division 01 Specification Sections, apply to this Section.

1.2 SUMMARY

A. Section includes acoustical panels and exposed suspension systems for ceilings.

B. Products furnished, but not installed under this Section, include anchors, clips, and other ceiling attachment devices to be cast in concrete.

1.3 PREINSTALLATION MEETINGS

A. Preinstallation Conference: Conduct conference at Project site.

1.4 ACTION SUBMITTALS

A. Product Data: For each type of product.

B. Samples: For each exposed product and for each color and texture specified, 6 inches (150 mm) in size.

C. Samples for Initial Selection: For components with factory-applied color finishes.

D. Samples for Verification: For each component indicated and for each exposed finish required, prepared on Samples of size indicated below.

1. Acoustical Panel: Set of 6-inch- (150-mm-) square Samples of each type, color, pattern, and texture.
2. Exposed Suspension-System Members, Moldings, and Trim: Set of 6-inch- (150-mm-) long Samples of each type, finish, and color.

1.5 INFORMATIONAL SUBMITTALS

A. Coordination Drawings: Reflected ceiling plans, drawn to scale, on which the following items are shown and coordinated with each other, using input from installers of the items involved:

1. Suspended ceiling components.
2. Structural members to which suspension systems will be attached.
3. Size and location of initial access modules for acoustical panels.

NOT FOR BIDDING

4. Items penetrating finished ceiling including the following:

   a. Lighting fixtures.
   b. Air outlets and inlets.
   c. Speakers.
   d. Sprinklers.
   e. Access panels.

5. Perimeter moldings.

B. Qualification Data: For testing agency.

C. Product Test Reports: For each acoustical panel ceiling, for tests performed by manufacturer and witnessed by a qualified testing agency.

D. Evaluation Reports: For each acoustical panel ceiling suspension system and anchor and fastener type, from ICC-ES.

E. Field quality-control reports.

1.6 CLOSEOUT SUBMITTALS

A. Maintenance Data: For finishes to include in maintenance manuals.

1.7 MAINTENANCE MATERIAL SUBMITTALS

A. Furnish extra materials that match products installed and that are packaged with protective covering for storage and identified with labels describing contents.

1. Acoustical Ceiling Panels: Full-size panels equal to 2 percent of quantity installed.
2. Suspension-System Components: Quantity of each exposed component equal to 2percent of quantity installed.
3. Hold-Down Clips: Equal to 2 percent of quantity installed.
4. Impact Clips: Equal to 2 percent of quantity installed.

1.8 QUALITY ASSURANCE

A. Testing Agency Qualifications: Qualified according to NVLAP for testing indicated.
   1. Mockups: Build mockups to verify selections made under sample submittals and to

1.9 DELIVERY, STORAGE, AND HANDLING

A. Deliver acoustical panels, suspension-system components, and accessories to Project site in original, unopened packages and store them in a fully enclosed, conditioned space where they will be protected against damage from moisture, humidity, temperature extremes, direct sunlight, surface contamination, and other causes.

NOT FOR BIDDING

B. Before installing acoustical panels, permit them to reach room temperature and a stabilized moisture content.

C. Handle acoustical panels carefully to avoid chipping edges or damaging units in any way.

1.10 FIELD CONDITIONS

A. Environmental Limitations: Do not install acoustical panel ceilings until spaces are enclosed and weatherproof, wet work in spaces is complete and dry, work above ceilings is complete, and ambient temperature and humidity conditions are maintained at the levels indicated for Project when occupied for its intended use.

1. Pressurized Plenums: Operate ventilation system for not less than 48 hours before beginning acoustical panel ceiling installation.

PART 2 - PRODUCTS

2.1 PERFORMANCE REQUIREMENTS

A. Seismic Performance: Acoustical ceilings shall withstand the effects of earthquake motions determined according to ASCE/SEI 7.

B. Surface-Burning Characteristics: Comply with ASTM E 84; testing by a qualified testing agency. Identify products with appropriate markings of applicable testing agency.

1. Flame-Spread Index: Comply with ASTM E 1264 for Class C materials.
2. Smoke-Developed Index: 50 or less.

C. Fire-Resistance Ratings: Comply with ASTM E 119; testing by a qualified testing agency. Identify products with appropriate markings of applicable testing agency.

1. Indicate design designations from UL's "Fire Resistance Directory" or from the listings of another qualified testing agency.

2.2 ACOUSTICAL PANELS, GENERAL

A. Low-Emitting Materials: Acoustical panel ceilings shall comply with the testing and product requirements of the California Department of Health Services' "Standard Practice for the Testing of Volatile Organic Emissions from Various Sources Using Small-Scale Environmental Chambers."

B. Source Limitations:

1. Acoustical Ceiling Panel: Obtain each type from single source from single manufacturer.
2. Suspension System: Obtain each type from single source from single manufacturer.

C. Source Limitations: Obtain each type of acoustical ceiling panel and supporting suspension system from single source from single manufacturer.

NOT FOR BIDDING

D. Glass-Fiber-Based Panels: Made with binder containing no urea formaldehyde.

E. Acoustical Panel Standard: Provide manufacturer's standard panels of configuration indicated that comply with ASTM E 1264 classifications as designated by types, patterns, acoustical ratings, and light reflectances unless otherwise indicated.

1. Mounting Method for Measuring NRC: Type E-400; plenum mounting in which face of test specimen is 15-3/4 inches (400 mm) away from test surface according to ASTM E 795.

F. Acoustical Panel Colors and Patterns: Match appearance characteristics indicated for each product type.

1. Where appearance characteristics of acoustical panels are indicated by referencing pattern designations in ASTM E 1264 and not manufacturers' proprietary product designations, provide products selected by Architect from each manufacturer's full range that comply with requirements indicated for type, pattern, color, light reflectance, acoustical performance, edge detail, and size.

2.3 ACOUSTICAL PANELS APC1

A. Basis-of-Design Product: Subject to compliance with requirements, provide Armstrong Georgian (high washable) 893 or comparable product by one of the following:

1. CertainTeed Corp.
2. Chicago Metallic Corporation.
3. Tectum Inc.
4. USG Interiors, Inc.; Subsidiary of USG Corporation.

B. Classification: Provide panels complying with ASTM E 1264 for type, form, and pattern as follows:

1. Type and Form: Type X, mineral base with painted finish; Form 2, water felted.
2. Pattern: G.

C. Color: White.

D. LR: Not less than 0.82.

E. CAC: Not less than 33.

F. Edge/Joint Detail: Reveal sized to fit flange of exposed suspension-system members.

G. Thickness: 5/8 inch.

H. Modular Size: 24 by 48 inches (610 by 1220 mm).

I. Broad Spectrum Antimicrobial Fungicide and Bactericide Treatment: Provide acoustical panels treated with manufacturer's standard antimicrobial formulation that inhibits fungus, mold, mildew, and gram-positive and gram-negative bacteria and showing no mold, mildew, or

NOT FOR BIDDING

bacterial growth when tested according to ASTM D 3273 and evaluated according to ASTM D 3274 or ASTM G 21.

2.4 ACOUSTICAL PANELS APC2

A. Basis-of-Design Product: Subject to compliance with requirements, provide USG Sheetrock ClimaPlus vinyl cover drywall (high washable) or comparable product by one of the following:

1. Armstrong
2. CertainTeed Corp.
3. Chicago Metallic Corporation.
4. Tectum Inc.

B. Classification: Provide panels complying with ASTM E 1264 for type, form, and pattern as follows:

1. Type and Form: Type XX.
2. Pattern: G.

C. Color: White.

D. Thickness: 1/2 inch.

E. Modular Size: 24 by 48 inches (610 by 1220 mm).

2.5 METAL SUSPENSION SYSTEMS, GENERAL

A. Metal Suspension-System Standard: Provide manufacturer's standard direct-hung metal suspension systems of types, structural classifications, and finishes indicated that comply with applicable requirements in ASTM C 635/C 635M.

1. High-Humidity Finish: Comply with ASTM C 635/C 635M requirements for "Coating Classification for Severe Environment Performance" where high-humidity finishes are indicated.

B. Attachment Devices: Size for five times the design load indicated in ASTM C 635/C 635M, Table 1, "Direct Hung," unless otherwise indicated. Comply with seismic design requirements.

C. Wire Hangers, Braces, and Ties: Provide wires complying with the following requirements:

1. Zinc-Coated, Carbon-Steel Wire: ASTM A 641/A 641M, Class 1 zinc coating, soft temper.
2. Stainless-Steel Wire: ASTM A 580/A 580M, Type 304, nonmagnetic.
3. Nickel-Copper-Alloy Wire: ASTM B 164, nickel-copper-alloy UNS No. N04400.
4. Size: Select wire diameter so its stress at three times hanger design load (ASTM C 635/C 635M, Table 1, "Direct Hung") will be less than yield stress of wire, but provide not less than 0.106-inch- (2.69-mm-) diameter wire.

NOT FOR BIDDING

D. Angle Hangers: Angles with legs not less than 7/8 inch (22 mm) wide; formed with 0.04-inch- (1-mm-) thick, galvanized-steel sheet complying with ASTM A 653/A 653M, G90 (Z275) coating designation; with bolted connections and 5/16-inch- (8-mm-) diameter bolts.

2.6 METAL SUSPENSION SYSTEM

A. Basis-of-Design Product: Subject to compliance with requirements, provide Armstrong Prelude ML or comparable product by one of the following:

1. CertainTeed Corp.
2. Chicago Metallic Corporation.
3. USG Interiors, Inc.; Subsidiary of USG Corporation.

B. Wide-Face, Capped, Double-Web, Steel Suspension System: Main and cross runners roll formed from cold-rolled steel sheet; prepainted, electrolytically zinc coated, or hot-dip galvanized according to ASTM A 653/A 653M, not less than G30 (Z90) coating designation; with prefinished 15/16-inch- (24-mm-) wide metal caps on flanges.

1. Structural Classification: Intermediate-duty system.
2. End Condition of Cross Runners: Override (stepped) type.
3. Face Design: Flat, flush.
4. Cap Material: aluminum cold-rolled sheet.
5. Cap Finish: Painted white.

2.7 METAL EDGE MOLDINGS AND TRIM

A. Basis-of-Design Product: Subject to compliance with requirements, provide Armstrong Prelude ML or comparable product by one of the following:

1. CertainTeed Corp.
2. Chicago Metallic Corporation.
3. Fry Reglet Corporation.
4. Gordon, Inc.
5. USG Interiors, Inc.; Subsidiary of USG Corporation.

B. Roll-Formed, Sheet-Metal Edge Moldings and Trim: Type and profile indicated or, if not indicated, manufacturer's standard moldings for edges and penetrations that comply with seismic design requirements; formed from sheet metal of same material, finish, and color as that used for exposed flanges of suspension-system runners.

1. Provide manufacturer's standard edge moldings that fit acoustical panel edge details and suspension systems indicated and that match width and configuration of exposed runners unless otherwise indicated.
2. For lay-in panels with reveal edge details, provide.

NOT FOR BIDDING

2.8 ACOUSTICAL SEALANT

A. Products: Subject to compliance with requirements, available products that may be incorporated into the Work include, but are not limited to, the following:

1. Acoustical Sealant for Exposed and Concealed Joints:

   a. Pecora Corporation; AC-20 FTR Acoustical and Insulation Sealant.
   b. USG Corporation; SHEETROCK Acoustical Sealant.

B. Acoustical Sealant: Manufacturer's standard sealant complying with ASTM C 834 and effective in reducing airborne sound transmission through perimeter joints and openings in building construction as demonstrated by testing representative assemblies according to ASTM E 90.

1. Exposed and Concealed Joints: Nonsag, paintable, nonstaining latex sealant.
2. Concealed Joints: Nondrying, nonhardening, nonskinning, nonstaining, gunnable, synthetic-rubber sealant.

PART 3 - EXECUTION

3.1 EXAMINATION

A. Examine substrates, areas, and conditions, including structural framing to which acoustical panel ceilings attach or abut, with Installer present, for compliance with requirements specified in this and other Sections that affect ceiling installation and anchorage and with requirements for installation tolerances and other conditions affecting performance of acoustical panel ceilings.

B. Examine acoustical panels before installation. Reject acoustical panels that are wet, moisture damaged, or mold damaged.

C. Proceed with installation only after unsatisfactory conditions have been corrected.

3.2 PREPARATION

A. Measure each ceiling area and establish layout of acoustical panels to balance border widths at opposite edges of each ceiling. Avoid using less-than-half-width panels at borders, and comply with layout shown on reflected ceiling plans.

3.3 INSTALLATION

A. General: Install acoustical panel ceilings to comply with ASTM C 636/C 636M and seismic design requirements indicated, according to manufacturer's written instructions and CISCA's "Ceiling Systems Handbook."

1. Fire-Rated Assembly: Install fire-rated ceiling systems according to tested fire-rated design.

NOT FOR BIDDING

B. Suspend ceiling hangers from building's structural members and as follows:

1. Install hangers plumb and free from contact with insulation or other objects within ceiling plenum that are not part of supporting structure or of ceiling suspension system.
2. Splay hangers only where required and, if permitted with fire-resistance-rated ceilings, to miss obstructions; offset resulting horizontal forces by bracing, counter-splaying, or other equally effective means.
3. Where width of ducts and other construction within ceiling plenum produces hanger spacings that interfere with location of hangers at spacings required to support standard suspension-system members, install supplemental suspension members and hangers in form of trapezes or equivalent devices.
4. Secure wire hangers to ceiling-suspension members and to supports above with a minimum of three tight turns. Connect hangers directly either to structures or to inserts, eye screws, or other devices that are secure and appropriate for substrate and that will not deteriorate or otherwise fail due to age, corrosion, or elevated temperatures.
5. Secure flat, angle, channel, and rod hangers to structure, including intermediate framing members, by attaching to inserts, eye screws, or other devices that are secure and appropriate for both the structure to which hangers are attached and the type of hanger involved. Install hangers in a manner that will not cause them to deteriorate or fail due to age, corrosion, or elevated temperatures.
6. Do not support ceilings directly from permanent metal forms or floor deck. Fasten hangers to cast-in-place hanger inserts, postinstalled mechanical or adhesive anchors, or power-actuated fasteners that extend through forms into concrete.
7. When steel framing does not permit installation of hanger wires at spacing required, install carrying channels or other supplemental support for attachment of hanger wires.
8. Do not attach hangers to steel deck tabs.
9. Do not attach hangers to steel roof deck. Attach hangers to structural members.
10. Space hangers not more than 48 inches (1200 mm) o.c. along each member supported directly from hangers unless otherwise indicated; provide hangers not more than 8 inches (200 mm) from ends of each member.
11. Size supplemental suspension members and hangers to support ceiling loads within performance limits established by referenced standards and publications.

C. Secure bracing wires to ceiling suspension members and to supports with a minimum of four tight turns. Suspend bracing from building's structural members as required for hangers, without attaching to permanent metal forms, steel deck, or steel deck tabs. Fasten bracing wires into concrete with cast-in-place or postinstalled anchors.

D. Install edge moldings and trim of type indicated at perimeter of acoustical ceiling area and where necessary to conceal edges of acoustical panels.

1. Apply acoustical sealant in a continuous ribbon concealed on back of vertical legs of moldings before they are installed.
2. Screw attach moldings to substrate at intervals not more than 16 inches (400 mm) o.c. and not more than 3 inches (75 mm) from ends, leveling with ceiling suspension system to a tolerance of 1/8 inch in 12 feet (3.2 mm in 3.6 m). Miter corners accurately and connect securely.
3. Do not use exposed fasteners, including pop rivets, on moldings and trim.

E. Install suspension-system runners so they are square and securely interlocked with one another. Remove and replace dented, bent, or kinked members.

NOT FOR BIDDING

F. Install acoustical panels with undamaged edges and fit accurately into suspension-system runners and edge moldings. Scribe and cut panels at borders and penetrations to provide a neat, precise fit.

1. Arrange directionally patterned acoustical panels as follows:

   a. As indicated on reflected ceiling plans.
   b. Install panels with pattern running in one direction parallel to axis of space.
   c. Install panels in a basket-weave pattern.

2. For square-edged panels, install panels with edges fully hidden from view by flanges of suspension-system runners and moldings.
3. For reveal-edged panels on suspension-system runners, install panels with bottom of reveal in firm contact with top surface of runner flanges.
4. For reveal-edged panels on suspension-system members with box-shaped flanges, install panels with reveal surfaces in firm contact with suspension-system surfaces and panel faces flush with bottom face of runners.
5. Paint cut edges of panel remaining exposed after installation; match color of exposed panel surfaces using coating recommended in writing for this purpose by acoustical panel manufacturer.
6. Install hold-down clips in areas indicated, in areas required by authorities having jurisdiction, and for fire-resistance ratings, space as recommended by panel manufacturer's written instructions unless otherwise indicated.
7. Install clean-room gasket system in areas indicated, sealing each panel and fixture as recommended by panel manufacturer's written instructions.
8. Protect lighting fixtures and air ducts to comply with requirements indicated for fire-resistance-rated assembly.

3.4 CLEANING

A. Clean exposed surfaces of acoustical panel ceilings, including trim, edge moldings, and suspension-system members. Comply with manufacturer's written instructions for cleaning and touchup of minor finish damage. Remove and replace ceiling components that cannot be successfully cleaned and repaired to permanently eliminate evidence of damage.

END OF SECTION 095113

NOT FOR BIDDING

(PAGE LEFT BLANK)

NOT FOR BIDDING

SECTION 096513 - RESILIENT BASE AND ACCESSORIES

PART 1 - GENERAL

1.1 RELATED DOCUMENTS

A. Drawings and general provisions of the Contract, including General and Supplementary Conditions and Division 01 Specification Sections, apply to this section.

1.2 SUMMARY

A. Section Includes:

1. Resilient base.
2. Resilient molding accessories.

B. Related Sections:

1. Division 09 Section "Resilient Tile Flooring" for resilient floor tile.

1.3 ACTION SUBMITTALS

A. Product Data: For each type of product indicated.

B. Samples for Initial Selection: For each type of product indicated.

C. Samples for Verification: For each type of product indicated, in manufacturer's standard-size Samples but not less than 12 inches (300 mm) long, of each resilient product color, texture, and pattern required.

D. Product Schedule: For resilient products.

1.4 MAINTENANCE MATERIAL SUBMITTALS

A. Furnish extra materials that match products installed and that are packaged with protective covering for storage and identified with labels describing contents.

1. Furnish not less than 10 linear feet (3 linear m) for every 500 linear feet (150 linear m) or fraction thereof, of each type, color, pattern, and size of resilient product installed.

1.5 QUALITY ASSURANCE

A. Fire-Test-Response Characteristics: As determined by testing identical products according to ASTM E 648 or NFPA 253 by a qualified testing agency.

NOT FOR BIDDING

1. Critical Radiant Flux Classification: Class I, not less than 0.45 W/sq. cm.

B. Mockups: Provide resilient products with mockups specified in other Sections.

1.6 DELIVERY, STORAGE, AND HANDLING

A. Store resilient products and installation materials in dry spaces protected from the weather, with ambient temperatures maintained within range recommended by manufacturer, but not less than 50 deg F (10 deg C) or more than 90 deg F (32 deg C).

1.7 PROJECT CONDITIONS

A. Maintain ambient temperatures within range recommended by manufacturer, but not less than 70 deg F (21 deg C) or more than 95 deg F (35 deg C), in spaces to receive resilient products during the following time periods:

1. 48 hours before installation.
2. During installation.
3. 48 hours after installation.

B. Until Substantial Completion, maintain ambient temperatures within range recommended by manufacturer, but not less than 55 deg F (13 deg C) or more than 95 deg F (35 deg C).

C. Install resilient products after other finishing operations, including painting, have been completed.

PART 2 - PRODUCTS

2.1 RESILIENT BASE

A. Resilient Base:

1. Manufacturers: Subject to compliance with requirements, available manufacturers offering products that may be incorporated into the Work include, but are not limited to, the following:

a. Allstate Rubber Corp.; Stoler Industries.
b. Armstrong World Industries, Inc.
c. Burke Mercer Flooring Products; Division of Burke Industries, Inc.
d. Endura Rubber Flooring; Division of Burke Industries, Inc.
e. Estrie Products International; American Biltrite (Canada) Ltd.
f. Flexco, Inc.
g. Johnsonite.
h. Mondo Rubber International, Inc.
i. Musson, R. C. Rubber Co.
j. Nora Rubber Flooring; Freudenberg Building Systems, Inc.
k. PRF USA, Inc.
l. Roppe Corporation, USA.

NOT FOR BIDDING

m. VPI, LLC; Floor Products Division.

B. Resilient Base Standard: ASTM F 1861.

1. Material Requirement: Type TS (rubber, vulcanized thermoset) or Type TP (rubber, thermoplastic).
2. Manufacturing Method: Group I (solid, homogeneous).
3. Style: Cove (base with toe).

C. Minimum Thickness: 0.125 inch (3.2 mm).

D. Height: As indicated on Drawings.

E. Lengths: Coils in manufacturer's standard length..

F. Outside Corners: Job formed.

G. Inside Corners: Job formed.

H. Finish: As selected by Architect from manufacturer's full range.

I. Colors and Patterns: As selected by Architect from full range of industry colors.

2.2 RESILIENT MOLDING ACCESSORY

A. Resilient Molding Accessory:

1. Manufacturers: Subject to compliance with requirements, available manufacturers offering products that may be incorporated into the Work include, but are not limited to, the following:

a. Burke Mercer Flooring Products; Division of Burke Industries, Inc.
b. Flexco, Inc.
c. Johnsonite.
d. R.C.A. Rubber Company (The).
e. Roppe Corporation, USA.
f. VPI, LLC; Floor Products Division.

B. Description: Joiner for tile and carpet and Transition strips.

C. Material: Vinyl.

D. Profile and Dimensions: As indicated.

E. Colors and Patterns: As selected by Architect from full range of industry colors.

NOT FOR BIDDING

2.3 INSTALLATION MATERIALS

A. Trowelable Leveling and Patching Compounds: Latex-modified, portland cement based or blended hydraulic-cement-based formulation provided or approved by manufacturer for applications indicated.

B. Adhesives: Water-resistant type recommended by manufacturer to suit resilient products and substrate conditions indicated.

1. Adhesives shall have a VOC content of 50 g/L or less when calculated according to 40 CFR 59, Subpart D (EPA Method 24).
2. Adhesives shall comply with the testing and product requirements of the California Department of Health Services' "Standard Practice for the Testing of Volatile Organic Emissions from Various Sources Using Small-Scale Environmental Chambers."

C. Stair-Tread-Nose Filler: Two-part epoxy compound recommended by resilient tread manufacturer to fill nosing substrates that do not conform to tread contours.

D. Metal Edge Strips: Extruded aluminum with mill finish of width shown, of height required to protect exposed edges of tiles, and in maximum available lengths to minimize running joints.

E. Floor Polish: Provide protective liquid floor polish products as recommended by resilient stair tread manufacturer.

PART 3 - EXECUTION

3.1 EXAMINATION

A. Examine substrates, with Installer present, for compliance with requirements for maximum moisture content and other conditions affecting performance of the Work.

B. Verify that finishes of substrates comply with tolerances and other requirements specified in other Sections and that substrates are free of cracks, ridges, depressions, scale, and foreign deposits that might interfere with adhesion of resilient products.

C. Proceed with installation only after unsatisfactory conditions have been corrected.

3.2 PREPARATION

A. Prepare substrates according to manufacturer's written instructions to ensure adhesion of resilient products.

B. Concrete Substrates for Resilient Stair Treads and Accessories: Prepare according to ASTM F 710.

1. Verify that substrates are dry and free of curing compounds, sealers, and hardeners.
2. Remove substrate coatings and other substances that are incompatible with adhesives and that contain soap, wax, oil, or silicone, using mechanical methods recommended by manufacturer. Do not use solvents.

NOT FOR BIDDING

3. Alkalinity and Adhesion Testing: Perform tests recommended by manufacturer.
4. Moisture Testing: Perform tests recommended by manufacturer. Proceed with installation only after substrates pass testing.

   a. Perform anhydrous calcium chloride test, ASTM F 1869. Proceed with installation only after substrates have maximum moisture-vapor-emission rate of 3 lb of water/1000 sq. ft. (1.36 kg of water/92.9 sq. m) in 24 hours.
   b. Perform relative humidity test using in situ probes, ASTM F 2170. Proceed with installation only after substrates have maximum 75 percent relative humidity level measurement.

C. Fill cracks, holes, and depressions in substrates with trowelable leveling and patching compound and remove bumps and ridges to produce a uniform and smooth substrate.

D. Do not install resilient products until they are same temperature as the space where they are to be installed.

   1. Move resilient products and installation materials into spaces where they will be installed at least 48 hours in advance of installation.

E. Sweep and vacuum clean substrates to be covered by resilient products immediately before installation.

3.3 RESILIENT BASE INSTALLATION

A. Comply with manufacturer's written instructions for installing resilient base.

B. Apply resilient base to walls, columns, pilasters, casework and cabinets in toe spaces, and other permanent fixtures in rooms and areas where base is required.

C. Install resilient base in lengths as long as practicable without gaps at seams and with tops of adjacent pieces aligned.

D. Tightly adhere resilient base to substrate throughout length of each piece, with base in continuous contact with horizontal and vertical substrates.

E. Do not stretch resilient base during installation.

F. On masonry surfaces or other similar irregular substrates, fill voids along top edge of resilient base with manufacturer's recommended adhesive filler material.

G. Preformed Corners: Install preformed corners before installing straight pieces.

H. Job-Formed Corners:

   1. Outside Corners: Use straight pieces of maximum lengths possible. Form without producing discoloration (whitening) at bends.
   2. Inside Corners: Use straight pieces of maximum lengths possible.

NOT FOR BIDDING

3.4 RESILIENT ACCESSORY INSTALLATION

A. Comply with manufacturer's written instructions for installing resilient accessories.

B. Resilient Molding Accessories: Butt to adjacent materials and tightly adhere to substrates throughout length of each piece. Install reducer strips at edges of carpet that would otherwise be exposed.

3.5 CLEANING AND PROTECTION

A. Comply with manufacturer's written instructions for cleaning and protection of resilient products.

B. Perform the following operations immediately after completing resilient product installation:

1. Remove adhesive and other blemishes from exposed surfaces.
2. Sweep and vacuum surfaces thoroughly.
3. Damp-mop surfaces to remove marks and soil.

C. Protect resilient products from mars, marks, indentations, and other damage from construction operations and placement of equipment and fixtures during remainder of construction period.

D. Floor Polish: Remove soil, visible adhesive and surface blemishes from resilient stair treads before applying liquid floor polish.

1. Apply two coat(s).

E. Cover resilient products until Substantial Completion.

END OF SECTION 096513

NOT FOR BIDDING

SECTION 096519 - RESILIENT TILE FLOORING

PART 1 - GENERAL

1.1 RELATED DOCUMENTS

A. Drawings and general provisions of the Contract, including General and Supplementary Conditions and Division 01 Specification Sections, apply to this Section.

1.2 SUMMARY

A. Section Includes:

1. Vinyl composition floor tile.

B. Related Sections:

1. Division 09 Section "Resilient Base and Accessories" for resilient base, reducer strips, and other accessories installed with resilient floor coverings.
2. Division 09 Section "Resilient Sheet Flooring" for resilient sheet floor coverings.

1.3 ACTION SUBMITTALS

A. Product Data: For each type of product indicated.

B. Shop Drawings: For each type of floor tile. Include floor tile layouts, edges, columns, doorways, enclosing partitions, built-in furniture, cabinets, and cutouts.

1. Show details of special patterns.

C. Samples for Initial Selection: For each type of floor tile indicated.

D. Samples for Verification: Full-size units of each color and pattern of floor tile required.

1. For heat-welding bead, manufacturer's standard-size Samples, but not less than 9 inches (230 mm) long, of each color required.

E. Seam Samples: For seamless-installation technique indicated and for each flooring product, color, and pattern required; with seam running lengthwise and in center of 6-by-9-inch (150-by-230-mm) sample applied to a rigid backing and prepared by Installer for this Project.

F. Product Schedule: For floor tile. Use same designations indicated on Drawings.

1.4 INFORMATIONAL SUBMITTALS

A. Qualification Data: For qualified Installer.

NOT FOR BIDDING

1.5 CLOSEOUT SUBMITTALS

A. Maintenance Data: For each type of floor tile to include in maintenance manuals.

1.6 MATERIALS MAINTENANCE SUBMITTALS

A. Furnish extra materials that match products installed and that are packaged with protective covering for storage and identified with labels describing contents.

1. Floor Tile: Furnish 1 box for every 50 boxes or fraction thereof, of each type, color, and pattern of floor tile installed.

1.7 QUALITY ASSURANCE

A. Installer Qualifications: A qualified installer who employs workers for this Project who are competent in techniques required by manufacturer for floor tile installation indicated.

1. Engage an installer who employs workers for this Project who are trained or certified by manufacturer for installation techniques required.

B. Fire-Test-Response Characteristics: As determined by testing identical products according to ASTM E 648 or NFPA 253 by a qualified testing agency.

1. Critical Radiant Flux Classification: Class I, not less than 0.45 W/sq. cm.

1.8 DELIVERY, STORAGE, AND HANDLING

A. Store floor tile and installation materials in dry spaces protected from the weather, with ambient temperatures maintained within range recommended by manufacturer, but not less than 50 deg F (10 deg C) or more than 90 deg F (32 deg C). Store floor tiles on flat surfaces.

1.9 PROJECT CONDITIONS

A. Maintain ambient temperatures within range recommended by manufacturer, but not less than 70 deg F (21 deg C) or more than 95 deg F (35 deg C, in spaces to receive floor tile during the following time periods:

1. 48 hours before installation.
2. During installation.
3. 48 hours after installation.

B. Until Substantial Completion, maintain ambient temperatures within range recommended by manufacturer, but not less than 55 deg F (13 deg C) or more than 95 deg F (35 deg C).

C. Close spaces to traffic during floor tile installation.

D. Close spaces to traffic for 48 hours after floor tile installation.

NOT FOR BIDDING

E. Install floor tile after other finishing operations, including painting, have been completed.

PART 2 - PRODUCTS

2.1 PERFORMANCE REQUIREMENTS

A. FloorScore Compliance: Resilient tile flooring shall comply with requirements of FloorScore Standard.

B. Low-Emitting Materials: Flooring system shall comply with the testing and product requirements of the California Department of Health Services' "Standard Practice for the Testing of Volatile Organic Emissions from Various Sources Using Small-Scale Environmental Chambers."

2.2 VINYL COMPOSITION FLOOR TILE

A. Basis-of-Design Product: Subject to compliance with requirements, provide Mannington Essentials Series or comparable product by one of the following:

1. AB ColorPlus, American Biltrite (Canada) Ltd..
2. Armstrong World Industries, Inc..
3. Congoleum Corporation.
4. Tarkett, Inc.
5. Vinylasa Tile, Distributed by American Tile Inc.

B. Tile Standard: ASTM F 1066, Class 2, through-pattern tile.

C. Wearing Surface: Smooth.

D. Thickness: 0.125 inch (3.2 mm).

E. Size: 12 by 12 inches (305 by 305 mm).

F. Colors and Patterns: As selected by Architect from full range of industry colors.

2.3 INSTALLATION MATERIALS

A. Trowelable Leveling and Patching Compounds: Latex-modified, portland cement based or blended hydraulic-cement-based formulation provided or approved by manufacturer for applications indicated.

B. Adhesives: Water-resistant type recommended by manufacturer to suit floor tile and substrate conditions indicated.

1. Adhesives shall comply with the following limits for VOC content when calculated according to 40 CFR 59, Subpart D (EPA Method 24):

a. VCT and Asphalt Tile Adhesives: Not more than 50 g/L.

NOT FOR BIDDING

2. Adhesives shall comply with the testing and product requirements of the California Department of Health Services' "Standard Practice for the Testing of Volatile Organic Emissions from Various Sources Using Small-Scale Environmental Chambers."

C. Floor Polish: Provide protective liquid floor polish products as recommended by manufacturer.

PART 3 - EXECUTION

3.1 EXAMINATION

A. Examine substrates, with Installer present, for compliance with requirements for maximum moisture content and other conditions affecting performance of the work.

B. Verify that finishes of substrates comply with tolerances and other requirements specified in other Sections and that substrates are free of cracks, ridges, depressions, scale, and foreign deposits that might interfere with adhesion of floor tile.

C. Proceed with installation only after unsatisfactory conditions have been corrected.

3.2 PREPARATION

A. Prepare substrates according to manufacturer's written instructions to ensure adhesion of resilient products.

B. Concrete Substrates: Prepare according to ASTM F 710.

1. Verify that substrates are dry and free of curing compounds, sealers, and hardeners.
2. Remove substrate coatings and other substances that are incompatible with adhesives and that contain soap, wax, oil, or silicone, using mechanical methods recommended by manufacturer. Do not use solvents.
3. Alkalinity and Adhesion Testing: Perform tests recommended by manufacturer. Proceed with installation only after substrates pass testing.
4. Moisture Testing: Perform tests recommended by manufacturer. Proceed with installation only after substrates pass testing.

   a. Perform anhydrous calcium chloride test, ASTM F 1869. Proceed with installation only after substrates have maximum moisture-vapor-emission rate of 3 lb of water/1000 sq. ft. (1.36 kg of water/92.9 sq. m) in 24 hours.
   b. Perform relative humidity test using in situ probes, ASTM F 2170. Proceed with installation only after substrates have a maximum 75% relative humidity level measurement.

C. Fill cracks, holes, and depressions in substrates with trowelable leveling and patching compound and remove bumps and ridges to produce a uniform and smooth substrate.

D. Do not install floor tiles until they are same temperature as space where they are to be installed.

1. Move resilient products and installation materials into spaces where they will be installed at least 48 hours in advance of installation.

NOT FOR BIDDING

E. Sweep and vacuum clean substrates to be covered by resilient products immediately before installation.

3.3 FLOOR TILE INSTALLATION

A. Comply with manufacturer's written instructions for installing floor tile.

B. Lay out floor tiles from center marks established with principal walls, discounting minor offsets, so tiles at opposite edges of room are of equal width. Adjust as necessary to avoid using cut widths that equal less than one-half tile at perimeter.

1. Lay tiles square with room axis.

C. Match floor tiles for color and pattern by selecting tiles from cartons in the same sequence as manufactured and packaged, if so numbered. Discard broken, cracked, chipped, or deformed tiles.

1. Lay tiles with grain direction alternating in adjacent tiles (basket-weave pattern).

D. Scribe, cut, and fit floor tiles to butt neatly and tightly to vertical surfaces and permanent fixtures including built-in furniture, cabinets, pipes, outlets, and door frames.

E. Extend floor tiles into toe spaces, door reveals, closets, and similar openings. Extend floor tiles to center of door openings.

F. Maintain reference markers, holes, and openings that are in place or marked for future cutting by repeating on floor tiles as marked on substrates. Use chalk or other nonpermanent, nonstaining marking device.

G. Install floor tiles on covers for telephone and electrical ducts, building expansion-joint covers, and similar items in finished floor areas. Maintain overall continuity of color and pattern between pieces of tile installed on covers and adjoining tiles. Tightly adhere tile edges to substrates that abut covers and to cover perimeters.

H. Adhere floor tiles to flooring substrates using a full spread of adhesive applied to substrate to produce a completed installation without open cracks, voids, raising and puckering at joints, telegraphing of adhesive spreader marks, and other surface imperfections.

3.4 CLEANING AND PROTECTION

A. Comply with manufacturer's written instructions for cleaning and protection of floor tile.

B. Perform the following operations immediately after completing floor tile installation:

1. Remove adhesive and other blemishes from exposed surfaces.
2. Sweep and vacuum surfaces thoroughly.
3. Damp-mop surfaces to remove marks and soil.

C. Protect floor tile products from mars, marks, indentations, and other damage from construction operations and placement of equipment and fixtures during remainder of construction period.

NOT FOR BIDDING

D. Floor Polish: Remove soil, visible adhesive, and surface blemishes from floor tile surfaces before applying liquid floor polish.

1. Apply two coat(s).

E. Joint Sealant: Apply sealant to resilient terrazzo floor tile perimeter and around columns, at door frames, and at other joints and penetrations.

F. Sealers and Finish Coats: Remove soil, visible adhesive, and surface blemishes from resilient terrazzo floor tile surfaces before applying liquid cleaners, sealers, and finish products.

1. Sealer: Apply two base coats of liquid sealer.
2. Finish: Apply two coats of liquid floor finish.

G. Cover floor tile until Substantial Completion.

END OF SECTION 096519

NOT FOR BIDDING

SECTION 096723 - RESINOUS FLOORING

PART 1 - GENERAL

1.1 RELATED DOCUMENTS

A. Drawings and general provisions of the Contract, including General and Supplementary Conditions and Division 01 Specification Sections, apply to this Section.

1.2 SUMMARY

A. Section includes resinous flooring systems.

1.3 PREINSTALLATION MEETINGS

A. Preinstallation Conference: Conduct conference at Project site.

1.4 ACTION SUBMITTALS

A. Product Data: For each type of product. Include manufacturer's technical data, application instructions, and recommendations for each resinous flooring component required.

B. Samples for Initial Selection: For each type of exposed finish required.

C. Samples for Verification: For each resinous flooring system required, 6 inches (150 mm) square, applied to a rigid backing by Installer for this Project.

1.5 INFORMATIONAL SUBMITTALS

A. Installer Certificates: Signed by manufacturer certifying that installers comply with specified requirements.

B. Material Certificates: For each resinous flooring component, from manufacturer.

C. Material Test Reports: For each resinous flooring system, by a qualified testing agency.

1.6 CLOSEOUT SUBMITTALS

A. Maintenance Data: For resinous flooring to include in maintenance manuals.

NOT FOR BIDDING

1.7 QUALITY ASSURANCE

A. Installer Qualifications: An authorized representative who is trained and approved by manufacturer.

B. Engage an installer who is certified in writing by resinous flooring manufacturer as qualified to apply resinous flooring systems indicated.

1.8 DELIVERY, STORAGE, AND HANDLING

A. Deliver materials in original packages and containers with seals unbroken, bearing manufacturer's labels indicating brand name and directions for storage and mixing with other components.

1.9 FIELD CONDITIONS

A. Environmental Limitations: Comply with resinous flooring manufacturer's written instructions for substrate temperature, ambient temperature, moisture, ventilation, and other conditions affecting resinous flooring application.

B. Lighting: Provide permanent lighting or, if permanent lighting is not in place, simulate permanent lighting conditions during resinous flooring application.

C. Close spaces to traffic during resinous flooring application and for 24 hours after application unless manufacturer recommends a longer period.

PART 2 - PRODUCTS

2.1 MANUFACTURERS

A. Source Limitations: Obtain primary resinous flooring materials, including primers, resins, hardening agents, grouting coats, and topcoats, from single source from single manufacturer. Obtain secondary materials, including patching and fill material, joint sealant, and repair materials, of type and from manufacturer recommended in writing by manufacturer of primary materials.

2.2 RESINOUS FLOORING

A. Basis of Design Product: Stonhard Stonshield UTS. Subject to compliance with requirements, provide the specified product or an equivalent product by one of the following:
   1. Dur-A-Flex Inc.
   2. General Polymers Corporation, a division of the Sherwin-Williams Company;.
   3. Valspar, Federal Flooring Division.

B. System Characteristics:

   1. Color and Pattern: As selected by Architect from manufacturer's full range.

NOT FOR BIDDING

2. Wearing Surface: Textured for slip resistance
3. Integral Cove Base: 6 inches high.
4. Overall System Thickness: 1/8 inch.
5. Federal Agency Approvals: USDA approved for food-processing environments.

C. System Components: Manufacturer's standard components that are compatible with each other and as follows:

1. Body Coat(s):

a. Resin: Urethane.
b. Formulation Description: 100 percent solids.
c. Application Method: Troweled or screeded.

1) Thickness of Coats: 1/8 inch.
2) Number of Coats: One.

d. Aggregates: Colored quartz (ceramic coated silica).

2. Topcoat: Chemical-resistant and UV-resistant sealing or finish coat(s).

a. Resin: Urethane.
b. Formulation Description: 100 percent solids.
c. Type: Clear.
d. Finish: Gloss.
e. Number of Coats: One.

D. System Physical Properties: Provide resinous flooring system with the following minimum physical property requirements when tested according to test methods indicated:

1. Compressive Strength: 7,700 psi per ASTM C 579.
2. Tensile Strength: 1,000 psi per ASTM C 307.
3. Flexural Modulus of Elasticity: 2.6 x 10N6 psi per ASTM C 580.
4. Water Absorption: 0.056% per ASTM C 413.
5. Coefficient of Thermal Linear Expansion: 1.1 x 10N-5 in/in degree C. per ASTM C 531.
6. Impact Resistance: 160 in.lbs per ASTM D 2794.
7. Resistance to Elevated Temperature: 200 degree F continuous exposure, 250 degree F. intermittent spills
8. Abrasion Resistance: 0.05 gm. maximum weight loss per ASTM D 4060.
9. Hardness: 80 to 84, Shore D per ASTM D 2240.
10. Bond Strength: 400 psi, 100 percent concrete failure per ACI 503R.
11. Slip Resistance Index: 1 per ASTM F1679

2.3 ACCESSORY MATERIALS

A. Patching and Fill Material: Resinous product of or approved by resinous flooring manufacturer and recommended by manufacturer for application indicated.

B. Joint Sealant: Type recommended or produced by resinous flooring manufacturer for type of service and joint condition indicated.

NOT FOR BIDDING

1. Use sealants that have a VOC content of 250 g/L or less when calculated according to 40 CFR 59, Subpart D (EPA Method 24).

PART 3 - EXECUTION

3.1 PREPARATION

A. Prepare and clean substrates according to resinous flooring manufacturer's written instructions for substrate indicated. Provide clean, dry substrate for resinous flooring application.

B. Concrete Substrates: Provide sound concrete surfaces free of laitance, glaze, efflorescence, curing compounds, form-release agents, dust, dirt, grease, oil, and other contaminants incompatible with resinous flooring.

1. Roughen concrete substrates as follows:

a. Shot-blast surfaces with an apparatus that abrades the concrete surface, contains the dispensed shot within the apparatus, and recirculates the shot by vacuum pickup.
b. Comply with ASTM C 811 requirements unless manufacturer's written instructions are more stringent.

2. Repair damaged and deteriorated concrete according to resinous flooring manufacturer's written instructions.
3. Verify that concrete substrates are dry and moisture-vapor emissions are within acceptable levels according to manufacturer's written instructions.

a. Anhydrous Calcium Chloride Test: ASTM F 1869. Proceed with application of resinous flooring only after substrates have maximum moisture-vapor-emission rate of 3 lb of water/1000 sq. ft. (1.36 kg of water/92.9 sq. m) of slab area in 24 hours.
b. Plastic Sheet Test: ASTM D 4263. Proceed with application only after testing indicates absence of moisture in substrates.
c. Relative Humidity Test: Use in situ probes, ASTM F 2170. Proceed with installation only after substrates have a maximum **75** percent relative humidity level measurement.

4. Alkalinity and Adhesion Testing: Verify that concrete substrates have pH within acceptable range. Perform tests recommended by manufacturer. Proceed with application only after substrates pass testing.

C. Patching and Filling: Use patching and fill material to fill holes and depressions in substrates according to manufacturer's written instructions.

1. Control Joint Treatment: Treat control joints and other nonmoving substrate cracks to prevent cracks from reflecting through resinous flooring according to manufacturer's written instructions.

NOT FOR BIDDING

D. Resinous Materials: Mix components and prepare materials according to resinous flooring manufacturer's written instructions.

3.2 APPLICATION

A. Apply components of resinous flooring system according to manufacturer's written instructions to produce a uniform, monolithic wearing surface of thickness indicated.

1. Coordinate application of components to provide optimum adhesion of resinous flooring system to substrate, and optimum intercoat adhesion.
2. Cure resinous flooring components according to manufacturer's written instructions. Prevent contamination during application and curing processes.
3. Expansion and Isolation Joint Treatment: At substrate expansion and isolation joints, comply with resinous flooring manufacturer's written instructions.

B. Primer: Apply primer over prepared substrate at manufacturer's recommended spreading rate.

C. Reinforcing Membrane: Apply reinforcing membrane to substrate cracks.

D. Integral Cove Base: Apply cove base mix to wall surfaces before applying flooring. Apply according to manufacturer's written instructions and details, including those for taping, mixing, priming, troweling, sanding, and topcoating of cove base. Round internal and external corners.

1. Integral Cove Base: 6 inches (150 mm) high.

E. Self-Leveling Body Coats: Apply self-leveling slurry body coats in thickness indicated for flooring system.

1. Aggregates: Broadcast aggregates at rate recommended by manufacturer and, after resin is cured, remove excess aggregates to provide surface texture indicated.

F. Troweled or Screeded Body Coats: Apply troweled or screeded body coats in thickness indicated for flooring system. Hand or power trowel and grout to fill voids. When body coats are cured, remove trowel marks and roughness using method recommended by manufacturer.

G. Grout Coat: Apply grout coat, of type recommended by resinous flooring manufacturer, to fill voids in surface of final body coat.

H. Topcoats: Apply topcoats in number indicated for flooring system and at spreading rates recommended in writing by manufacturer and to produce wearing surface indicated.

3.3 FIELD QUALITY CONTROL

A. Material Sampling: Owner may, at any time and any number of times during resinous flooring application, require material samples for testing for compliance with requirements.

1. Owner will engage an independent testing agency to take samples of materials being used. Material samples will be taken, identified, sealed, and certified in presence of Contractor.

NOT FOR BIDDING

2. Testing agency will test samples for compliance with requirements, using applicable referenced testing procedures or, if not referenced, using testing procedures listed in manufacturer's product data.
3. If test results show applied materials do not comply with specified requirements, pay for testing, remove noncomplying materials, prepare surfaces coated with unacceptable materials, and reapply flooring materials to comply with requirements.

B. Core Sampling: At the direction of Owner and at locations designated by Owner, take one core sample per 1000 sq. ft. (92.9 sq. m) of resinous flooring, or portion of, to verify thickness. For each sample that fails to comply with requirements, take two additional samples. Repair damage caused by coring. Correct deficiencies in installed flooring as indicated by testing.

3.4 PROTECTION

A. Protect resinous flooring from damage and wear during the remainder of construction period. Use protective methods and materials, including temporary covering, recommended in writing by resinous flooring manufacturer.

END OF SECTION 096723

NOT FOR BIDDING

SECTION 099113 - EXTERIOR PAINTING

PART 1 - GENERAL

1.1 RELATED DOCUMENTS

A. Drawings and general provisions of the Contract, including General and Supplementary Conditions and Division 01 Specification Sections, apply to this Section.

1.2 SUMMARY

A. Section includes surface preparation and the application of paint systems on the following exterior substrates:

1. Concrete.
2. Steel.
3. Galvanized metal.
4. Aluminum (not anodized or otherwise coated).
5. Wood.
6. Plastic trim fabrications.
7. Exterior gypsum board.
8. Fiber-Cement siding and trim

B. Related Requirements:

1. Division 05 Sections for shop priming of metal substrates with primers specified in this Section.
2. Division 06 Sections for shop priming carpentry with primers specified in this Section.
3. Division 08 Sections for factory priming windows and doors with primers specified in this Section.
4. Division 09 painting Sections for special-use coatings.
5. Division 09 Section "Interior Painting" for surface preparation and the application of paint systems on interior substrates.
6. Division 09 Section "Staining and Transparent Finishing" for surface preparation and the application of wood stains and transparent finishes on exterior wood substrates.

1.3 DEFINITIONS

A. Gloss Level 1: Not more than 5 units at 60 degrees and 10 units at 85 degrees, according to ASTM D 523.

B. Gloss Level 3: 10 to 25 units at 60 degrees and 10 to 35 units at 85 degrees, according to ASTM D 523.

C. Gloss Level 4: 20 to 35 units at 60 degrees and not less than 35 units at 85 degrees, according to ASTM D 523.

NOT FOR BIDDING

D. Gloss Level 5: 35 to 70 units at 60 degrees, according to ASTM D 523.

E. Gloss Level 6: 70 to 85 units at 60 degrees, according to ASTM D 523.

F. Gloss Level 7: More than 85 units at 60 degrees, according to ASTM D 523.

1.4 ACTION SUBMITTALS

A. Product Data: For each type of product. Include preparation requirements and application instructions.

B. Samples for Initial Selection: For each type of topcoat product.

C. Samples for Verification: For each type of paint system and each color and gloss of topcoat.

1. Submit Samples on rigid backing, 8 inches (200 mm) square.
2. Step coats on Samples to show each coat required for system.
3. Label each coat of each Sample.
4. Label each Sample for location and application area.

D. Product List: For each product indicated, include the following:

1. Cross-reference to paint system and locations of application areas. Use same designations indicated on Drawings and in schedules.
2. Printout of current "MPI Approved Products List" for each product category specified, with the proposed product highlighted.
3. VOC content.

1.5 MAINTENANCE MATERIAL SUBMITTALS

A. Furnish extra materials, from the same product run, that match products installed and that are packaged with protective covering for storage and identified with labels describing contents.

1. Paint: 5 percent, but not less than 1 gal. (3.8 L) of each material and color applied.

1.6 QUALITY ASSURANCE

A. Mockups: Apply mockups of each paint system indicated and each color and finish selected to verify preliminary selections made under Sample submittals and to demonstrate aesthetic effects and set quality standards for materials and execution.

1. Architect will select one surface to represent surfaces and conditions for application of each paint system specified in Part 3.

a. Vertical and Horizontal Surfaces: Provide samples of at least 100 sq. ft. (9 sq. m).
b. Other Items: Architect will designate items or areas required.

2. Final approval of color selections will be based on mockups.

NOT FOR BIDDING

a. If preliminary color selections are not approved, apply additional mockups of additional colors selected by Architect at no added cost to Owner.

3. Approval of mockups does not constitute approval of deviations from the Contract Documents contained in mockups unless Architect specifically approves such deviations in writing.
4. Subject to compliance with requirements, approved mockups may become part of the completed Work if undisturbed at time of Substantial Completion.

1.7 DELIVERY, STORAGE, AND HANDLING

A. Store materials not in use in tightly covered containers in well ventilated areas with ambient temperatures continuously maintained at not less than 45 deg F (7 deg C).

1. Maintain containers in clean condition, free of foreign materials and residue.
2. Remove rags and waste from storage areas daily.

1.8 FIELD CONDITIONS

A. Apply paints only when temperature of surfaces to be painted and ambient air temperatures are between 50 and 95 deg F (10 and 35 deg C).

B. Do not apply paints in snow, rain, fog, or mist; when relative humidity exceeds 85 percent; at temperatures less than 5 deg F (3 deg C) above the dew point; or to damp or wet surfaces.

PART 2 - PRODUCTS

2.1 MANUFACTURERS

A. Manufacturers: Subject to compliance with requirements, available manufacturers offering products that may be incorporated into the Work include, but are not limited to, the following:

1. Behr Process Corporation.
2. Benjamin Moore & Co.
3. Benjamin Moore & Co. (Canada).
4. Bennette Paint Manufacturing Company, Inc.
5. Benjamin Moore & Co. (Canada).
6. BLP Mobile Paint Manufacturing.
7. California Paints.
8. Cloverdale Paint.
9. ColorWheel Paints & Coatings.
10. Columbia Paint & Coatings.
11. Conco Paints.
12. Coronado Paint.
13. Davis Paint Company.
14. Del Technical Coatings.
15. Diamond Vogel Paints.

NOT FOR BIDDING

16. Dunn-Edwards Corporation.
17. Durant Performance Coatings.
18. Duron, Inc.
19. Envirocoatings Canada Inc.
20. Euclid Chemical Company.
21. Farrell-Calhoun.
22. Frazee Paint.
23. General Paint.
24. Hallman Lindsay Paints.
25. Hirshfield's, Inc.
26. ICI Paints.
27. ICI Paints (Canada).
28. Insl-x.
29. Kelly-Moore Paints.
30. Kwal Paint.
31. Life Paint Corp.
32. M.A.B. Paints.
33. Microblend Technologies Inc.
34. Miller Paint.
35. Mills Paint.
36. PARA Paints.
37. Parex LaHabra Inc.
38. Parker Paint Mfg. Co. Inc.
39. PPG Architectural Finishes, Inc.
40. Pratt & Lambert.
41. Rodda Paint Co.
42. Scott Paint.
43. Sherwin-Williams Company (The).
44. Sico, Inc.
45. Vista Paint.
46. Zinsser.

B. Products: Subject to compliance with requirements, available products that may be incorporated into the Work include, but are not limited to products listed in other Part 2 articles for the paint category indicated.

2.2 PAINT, GENERAL

A. Material Compatibility:

1. Provide materials for use within each paint system that are compatible with one another and substrates indicated, under conditions of service and application as demonstrated by manufacturer, based on testing and field experience.
2. For each coat in a paint system, provide products recommended in writing by manufacturers of topcoat for use in paint system and on substrate indicated.

B. VOC Content: Provide materials that comply with VOC limits of authorities having jurisdiction.

C. Colors: As selected by Architect from manufacturer's full range.

NOT FOR BIDDING

2.3 SOURCE QUALITY CONTROL

A. Testing of Paint Materials: Owner reserves the right to invoke the following procedure:

1. Owner will engage the services of a qualified testing agency to sample paint materials. Contractor will be notified in advance and may be present when samples are taken. If paint materials have already been delivered to Project site, samples may be taken at Project site. Samples will be identified, sealed, and certified by testing agency.
2. Testing agency will perform tests for compliance with product requirements.
3. Owner may direct Contractor to stop applying paints if test results show materials being used do not comply with product requirements. Contractor shall remove noncomplying paint materials from Project site, pay for testing, and repaint surfaces painted with rejected materials. Contractor will be required to remove rejected materials from previously painted surfaces if, on repainting with complying materials, the two paints are incompatible.

PART 3 - EXECUTION

3.1 EXAMINATION

A. Examine substrates and conditions, with applicator present, for compliance with requirements for maximum moisture content and other conditions affecting performance of the Work.

B. Maximum Moisture Content of Substrates: When measured with an electronic moisture meter as follows:

1. Concrete: 12 percent.
2. Masonry (Clay and CMU): 12 percent.
3. Wood: 15 percent.
4. Portland Cement Plaster: 12 percent.
5. Gypsum Board: 12 percent.

C. Portland Cement Plaster Substrates: Verify that plaster is fully cured.

D. Exterior Gypsum Board Substrates: Verify that finishing compound is sanded smooth.

E. Verify suitability of substrates, including surface conditions and compatibility with existing finishes and primers.

F. Proceed with coating application only after unsatisfactory conditions have been corrected.

1. Application of coating indicates acceptance of surfaces and conditions.

3.2 PREPARATION

A. Comply with manufacturer's written instructions and recommendations in "MPI Manual" applicable to substrates and paint systems indicated.

NOT FOR BIDDING

B. Remove hardware, covers, plates, and similar items already in place that are removable and are not to be painted. If removal is impractical or impossible because of size or weight of item, provide surface-applied protection before surface preparation and painting.

1. After completing painting operations, use workers skilled in the trades involved to reinstall items that were removed. Remove surface-applied protection.

C. Clean substrates of substances that could impair bond of paints, including dust, dirt, oil, grease, and incompatible paints and encapsulants.

1. Remove incompatible primers and reprime substrate with compatible primers or apply tie coat as required to produce paint systems indicated.

D. Concrete Substrates: Remove release agents, curing compounds, efflorescence, and chalk. Do not paint surfaces if moisture content or alkalinity of surfaces to be painted exceeds that permitted in manufacturer's written instructions.

E. Masonry Substrates: Remove efflorescence and chalk. Do not paint surfaces if moisture content or alkalinity of surfaces or mortar joints exceeds that permitted in manufacturer's written instructions.

F. Steel Substrates: Remove rust, loose mill scale, and shop primer if any. Clean using methods recommended in writing by paint manufacturer.

G. Shop-Primed Steel Substrates: Clean field welds, bolted connections, and abraded areas of shop paint, and paint exposed areas with the same material as used for shop priming to comply with SSPC-PA 1 for touching up shop-primed surfaces.

H. Galvanized-Metal Substrates: Remove grease and oil residue from galvanized sheet metal by mechanical methods to produce clean, lightly etched surfaces that promote adhesion of subsequently applied paints.

I. Aluminum Substrates: Remove loose surface oxidation.

J. Wood Substrates:

1. Scrape and clean knots. Before applying primer, apply coat of knot sealer recommended in writing by topcoat manufacturer for exterior use in paint system indicated.
2. Sand surfaces that will be exposed to view, and dust off.
3. Prime edges, ends, faces, undersides, and backsides of wood.
4. After priming, fill holes and imperfections in the finish surfaces with putty or plastic wood filler. Sand smooth when dried.

K. Plastic Trim Fabrication Substrates: Remove dust, dirt, and other foreign material that might impair bond of paints to substrates.

3.3 APPLICATION

A. Apply paints according to manufacturer's written instructions and recommendations in "MPI Manual."

NOT FOR BIDDING

1. Use applicators and techniques suited for paint and substrate indicated.
2. Paint surfaces behind movable items same as similar exposed surfaces. Before final installation, paint surfaces behind permanently fixed items with prime coat only.
3. Paint both sides and edges of exterior doors and entire exposed surface of exterior door frames.
4. Paint entire exposed surface of window frames and sashes.
5. Do not paint over labels of independent testing agencies or equipment name, identification, performance rating, or nomenclature plates.
6. Primers specified in painting schedules may be omitted on items that are factory primed or factory finished if acceptable to topcoat manufacturers.

B. Tint undercoats same color as topcoat, but tint each undercoat a lighter shade to facilitate identification of each coat if multiple coats of same material are to be applied. Provide sufficient difference in shade of undercoats to distinguish each separate coat.

C. If undercoats or other conditions show through topcoat, apply additional coats until cured film has a uniform paint finish, color, and appearance.

D. Apply paints to produce surface films without cloudiness, spotting, holidays, laps, brush marks, roller tracking, runs, sags, ropiness, or other surface imperfections. Cut in sharp lines and color breaks.

E. Painting Fire Suppression, Plumbing, HVAC, Electrical, Communication, and Electronic Safety and Security Work:

1. Paint the following work where exposed to view:

a. Equipment, including panelboards and switch gear.
b. Uninsulated metal piping.
c. Uninsulated plastic piping.
d. Pipe hangers and supports.
e. Metal conduit.
f. Plastic conduit.
g. Tanks that do not have factory-applied final finishes.

3.4 FIELD QUALITY CONTROL

A. Dry Film Thickness Testing: Owner may engage the services of a qualified testing and inspecting agency to inspect and test paint for dry film thickness.

1. Contractor shall touch up and restore painted surfaces damaged by testing.
2. If test results show that dry film thickness of applied paint does not comply with paint manufacturer's written recommendations, Contractor shall pay for testing and apply additional coats as needed to provide dry film thickness that complies with paint manufacturer's written recommendations.

NOT FOR BIDDING

3.5 CLEANING AND PROTECTION

A. At end of each workday, remove rubbish, empty cans, rags, and other discarded materials from Project site.

B. After completing paint application, clean spattered surfaces. Remove spattered paints by washing, scraping, or other methods. Do not scratch or damage adjacent finished surfaces.

C. Protect work of other trades against damage from paint application. Correct damage to work of other trades by cleaning, repairing, replacing, and refinishing, as approved by Architect, and leave in an undamaged condition.

D. At completion of construction activities of other trades, touch up and restore damaged or defaced painted surfaces.

3.6 EXTERIOR PAINTING SCHEDULE

A. Steel Substrates:

1. Alkyd System:

a. Prime Coat: Primer, alkyd, anticorrosive for metal.
b. Intermediate Coat: Exterior alkyd enamel matching topcoat.
c. Topcoat: Alkyd, exterior, semi-gloss (Gloss Level 6).

2. Quick-Drying Enamel System:

a. Prime Coat: Primer, alkyd, quick dry, for metal.
b. Intermediate Coat: Alkyd, quick dry, matching topcoat.
c. Topcoat: Alkyd, quick dry, semi-gloss (Gloss Level 6).

B. Galvanized-Metal Substrates:

1. Alkyd System:

a. Prime Coat: Primer, galvanized metal, as recommended in writing by topcoat manufacturer for exterior use on galvanized-metal substrates with topcoat indicated.
b. Intermediate Coat: Exterior alkyd enamel matching topcoat.
c. Topcoat: Alkyd, exterior, gloss (Gloss Level 6).

C. Wood Substrates: Including wood trim and architectural woodwork.

1. Alkyd System:

a. Prime Coat: Primer, alkyd for exterior wood.
b. Intermediate Coat: Exterior alkyd enamel matching topcoat.
c. Topcoat: Alkyd, exterior, gloss (Gloss Level 6).

D. Plastic Trim Fabrication Substrates:

NOT FOR BIDDING

1. Alkyd System:

    a. Prime Coat: Primer, bonding, water based.
    b. Intermediate Coat: Exterior alkyd enamel matching topcoat.
    c. Topcoat: Alkyd, exterior, gloss (Gloss Level 6).

END OF SECTION 099113

NOT FOR BIDDING

(PAGE LEFT BLANK)

NOT FOR BIDDING

SECTION 099123 - INTERIOR PAINTING

PART 1 - GENERAL

1.1 RELATED DOCUMENTS

A. Drawings and general provisions of the Contract, including General and Supplementary Conditions and Division 01 Specification Sections, apply to this Section.

1.2 SUMMARY

A. Section includes surface preparation and the application of paint systems on the following interior substrates:

1. Concrete.
2. Steel.
3. Galvanized metal.
4. Aluminum (not anodized or otherwise coated).
5. Wood.
6. Gypsum board.

B. Related Requirements:

1. Division 05 Sections for shop priming of metal substrates with primers specified in this Section.
2. Division 06 Sections for shop priming carpentry with primers specified in this Section.
3. Division 08 Sections for factory priming windows and doors with primers specified in this Section.
4. Division 09 painting Sections for high-performance and special-use coatings.
5. Division 09 Section "Exterior Painting" for surface preparation and the application of paint systems on exterior substrates.
6. Division 09 Section "Staining and Transparent Finishing" for surface preparation and the application of wood stains and transparent finishes on interior wood substrates.

1.3 DEFINITIONS

A. Gloss Level 1: Not more than 5 units at 60 degrees and 10 units at 85 degrees, according to ASTM D 523.

B. Gloss Level 2: Not more than 10 units at 60 degrees and 10 to 35 units at 85 degrees, according to ASTM D 523.

C. Gloss Level 3: 10 to 25 units at 60 degrees and 10 to 35 units at 85 degrees, according to ASTM D 523.

D. Gloss Level 4: 20 to 35 units at 60 degrees and not less than 35 units at 85 degrees, according to ASTM D 523.

NOT FOR BIDDING

E. Gloss Level 5: 35 to 70 units at 60 degrees, according to ASTM D 523.

F. Gloss Level 6: 70 to 85 units at 60 degrees, according to ASTM D 523.

G. Gloss Level 7: More than 85 units at 60 degrees, according to ASTM D 523.

1.4 ACTION SUBMITTALS

A. Product Data: For each type of product. Include preparation requirements and application instructions.

B. Samples for Initial Selection: For each type of topcoat product.

C. Samples for Verification: For each type of paint system and in each color and gloss of topcoat.

1. Submit Samples on rigid backing, 8 inches (200 mm) square.
2. Step coats on Samples to show each coat required for system.
3. Label each coat of each Sample.
4. Label each Sample for location and application area.

D. Product List: For each product indicated, include the following:

1. Cross-reference to paint system and locations of application areas. Use same designations indicated on Drawings and in schedules.
2. Printout of current "MPI Approved Products List" for each product category specified in Part 2, with the proposed product highlighted.
3. VOC content.

1.5 MAINTENANCE MATERIAL SUBMITTALS

A. Furnish extra materials, from the same product run, that match products installed and that are packaged with protective covering for storage and identified with labels describing contents.

1. Paint: 5 <Insert number> percent, but not less than 1 gal. (3.8 L) of each material and color applied.

1.6 QUALITY ASSURANCE

A. Mockups: Apply mockups of each paint system indicated and each color and finish selected to verify preliminary selections made under Sample submittals and to demonstrate aesthetic effects and set quality standards for materials and execution.

1. Architect will select one surface to represent surfaces and conditions for application of each paint system specified in Part 3.

a. Vertical and Horizontal Surfaces: Provide samples of at least 100 sq. ft. (9 sq. m).
b. Other Items: Architect will designate items or areas required.

2. Final approval of color selections will be based on mockups.

NOT FOR BIDDING

a. If preliminary color selections are not approved, apply additional mockups of additional colors selected by Architect at no added cost to Owner.

3. Approval of mockups does not constitute approval of deviations from the Contract Documents contained in mockups unless Architect specifically approves such deviations in writing.
4. Subject to compliance with requirements, approved mockups may become part of the completed Work if undisturbed at time of Substantial Completion.

1.7 DELIVERY, STORAGE, AND HANDLING

A. Store materials not in use in tightly covered containers in well ventilated areas with ambient temperatures continuously maintained at not less than 45 deg F (7 deg C).

1. Maintain containers in clean condition, free of foreign materials and residue.
2. Remove rags and waste from storage areas daily.

1.8 FIELD CONDITIONS

A. Apply paints only when temperature of surfaces to be painted and ambient air temperatures are between 50 and 95 deg F (10 and 35 deg C).

B. Do not apply paints when relative humidity exceeds 85 percent; at temperatures less than 5 deg F (3 deg C) above the dew point; or to damp or wet surfaces.

PART 2 - PRODUCTS

2.1 MANUFACTURERS

A. Manufacturers: Subject to compliance with requirements, available manufacturers offering products that may be incorporated into the Work include, but are not limited to, the following:

1. Behr Process Corporation.
2. Benjamin Moore & Co.
3. Benjamin Moore & Co. (Canada).
4. Bennette Paint Manufacturing Company, Inc.
5. Benjamin Moore & Co. (Canada).
6. BLP Mobile Paint Manufacturing.
7. California Paints.
8. Cloverdale Paint.
9. Color Wheel Paints & Coatings.
10. Columbia Paint & Coatings.
11. Conco Paints.
12. Coronado Paint.
13. Davis Paint Company.
14. Diamond Vogel Paints.
15. Dunn-Edwards Corporation.

NOT FOR BIDDING

16. Durant Performance Coatings.
17. Duron, Inc.
18. Envirocoatings Canada Inc.
19. Euclid Chemical Company.
20. Farrell-Calhoun.
21. Frazee Paint.
22. General Paint.
23. Hallman Lindsay Paints.
24. Hirshfield's, Inc.
25. ICI Paints.
26. ICI Paints (Canada).
27. Insl-x.
28. Kelly-Moore Paints.
29. Kwal Paint.
30. M.A.B. Paints.
31. McCormick Paints.
32. Microblend Technologies Inc.
33. Miller Paint.
34. Mills Paint.
35. PARA Paints.
36. Parex LaHabra Inc.
37. Parker Paint Mfg. Co. Inc.
38. PPG Architectural Finishes, Inc.
39. Pratt & Lambert.
40. Rodda Paint Co.
41. Scott Paint.
42. Sherwin-Williams Company (The).
43. Sico, Inc.
44. Southern Diversified Products, LLC.
45. Smith Paint Products.
46. Vista Paint.
47. Zinsser.

B. Products: Subject to compliance with requirements, available products that may be incorporated into the Work include, but are not limited to products listed in other Part 2 articles for the paint category indicated.

2.2 PAINT, GENERAL

A. Material Compatibility:

1. Provide materials for use within each paint system that are compatible with one another and substrates indicated, under conditions of service and application as demonstrated by manufacturer, based on testing and field experience.
2. For each coat in a paint system, provide products recommended in writing by manufacturers of topcoat for use in paint system and on substrate indicated.

B. VOC Content: Products shall comply with VOC limits of authorities having jurisdiction and, for interior paints and coatings applied at Project site, the following VOC limits, exclusive of

NOT FOR BIDDING

colorants added to a tint base, when calculated according to 40 CFR 59, Subpart D (EPA Method 24).

1. Flat Paints and Coatings: 50 g/L.
2. Nonflat Paints and Coatings: 150 g/L.
3. Dry-Fog Coatings: 400 g/L.
4. Primers, Sealers, and Undercoaters: 200 g/L.
5. Anticorrosive and Antirust Paints Applied to Ferrous Metals: 250 g/L.
6. Zinc-Rich Industrial Maintenance Primers: 340 g/L.
7. Pretreatment Wash Primers: 420 g/L.
8. Floor Coatings: 100 g/L.
9. Shellacs, Clear: 730 g/L.
10. Shellacs, Pigmented: 550 g/L.

C. Low-Emitting Materials: Interior paints and coatings shall comply with the testing and product requirements of the California Department of Health Services' "Standard Practice for the Testing of Volatile Organic Emissions from Various Sources Using Small-Scale Environmental Chambers."

D. Colors: As selected by Architect from manufacturer's full range.

2.3 SOURCE QUALITY CONTROL

A. Testing of Paint Materials: Owner reserves the right to invoke the following procedure:

1. Owner will engage the services of a qualified testing agency to sample paint materials. Contractor will be notified in advance and may be present when samples are taken. If paint materials have already been delivered to Project site, samples may be taken at Project site. Samples will be identified, sealed, and certified by testing agency.
2. Testing agency will perform tests for compliance with product requirements.
3. Owner may direct Contractor to stop applying coatings if test results show materials being used do not comply with product requirements. Contractor shall remove noncomplying paint materials from Project site, pay for testing, and repaint surfaces painted with rejected materials. Contractor will be required to remove rejected materials from previously painted surfaces if, on repainting with complying materials, the two paints are incompatible.

PART 3 - EXECUTION

3.1 EXAMINATION

A. Examine substrates and conditions, with Applicator present, for compliance with requirements for maximum moisture content and other conditions affecting performance of the Work.

B. Maximum Moisture Content of Substrates: When measured with an electronic moisture meter as follows:

1. Concrete: 12 percent.

NOT FOR BIDDING

2. Masonry (Clay and CMU): 12 percent.
3. Wood: 15 percent.
4. Gypsum Board: 12 percent.
5. Plaster: 12 percent.

C. Gypsum Board Substrates: Verify that finishing compound is sanded smooth.

D. Plaster Substrates: Verify that plaster is fully cured.

E. Spray-Textured Ceiling Substrates: Verify that surfaces are dry.

F. Verify suitability of substrates, including surface conditions and compatibility with existing finishes and primers.

G. Proceed with coating application only after unsatisfactory conditions have been corrected.

1. Application of coating indicates acceptance of surfaces and conditions.

3.2 PREPARATION

A. Comply with manufacturer's written instructions and recommendations in "MPI Manual" applicable to substrates indicated.

B. Remove hardware, covers, plates, and similar items already in place that are removable and are not to be painted. If removal is impractical or impossible because of size or weight of item, provide surface-applied protection before surface preparation and painting.

1. After completing painting operations, use workers skilled in the trades involved to reinstall items that were removed. Remove surface-applied protection if any.

C. Clean substrates of substances that could impair bond of paints, including dust, dirt, oil, grease, and incompatible paints and encapsulants.

1. Remove incompatible primers and reprime substrate with compatible primers or apply tie coat as required to produce paint systems indicated.

D. Concrete Substrates: Remove release agents, curing compounds, efflorescence, and chalk. Do not paint surfaces if moisture content or alkalinity of surfaces to be painted exceeds that permitted in manufacturer's written instructions.

E. Masonry Substrates: Remove efflorescence and chalk. Do not paint surfaces if moisture content or alkalinity of surfaces or mortar joints exceed that permitted in manufacturer's written instructions.

F. Steel Substrates: Remove rust, loose mill scale, and shop primer, if any. Clean using methods recommended in writing by paint manufacturer.

G. Shop-Primed Steel Substrates: Clean field welds, bolted connections, and abraded areas of shop paint, and paint exposed areas with the same material as used for shop priming to comply with SSPC-PA 1 for touching up shop-primed surfaces.

NOT FOR BIDDING

H. Galvanized-Metal Substrates: Remove grease and oil residue from galvanized sheet metal fabricated from coil stock by mechanical methods to produce clean, lightly etched surfaces that promote adhesion of subsequently applied paints.

I. Aluminum Substrates: Remove loose surface oxidation.

J. Wood Substrates:

1. Scrape and clean knots, and apply coat of knot sealer before applying primer.
2. Sand surfaces that will be exposed to view, and dust off.
3. Prime edges, ends, faces, undersides, and backsides of wood.
4. After priming, fill holes and imperfections in the finish surfaces with putty or plastic wood filler. Sand smooth when dried.

K. Cotton or Canvas Insulation Covering Substrates: Remove dust, dirt, and other foreign material that might impair bond of paints to substrates.

3.3 APPLICATION

A. Apply paints according to manufacturer's written instructions and to recommendations in "MPI Manual."

1. Use applicators and techniques suited for paint and substrate indicated.
2. Paint surfaces behind movable equipment and furniture same as similar exposed surfaces. Before final installation, paint surfaces behind permanently fixed equipment or furniture with prime coat only.
3. Paint front and backsides of access panels, removable or hinged covers, and similar hinged items to match exposed surfaces.
4. Do not paint over labels of independent testing agencies or equipment name, identification, performance rating, or nomenclature plates.
5. Primers specified in painting schedules may be omitted on items that are factory primed or factory finished if acceptable to topcoat manufacturers.

B. Tint each undercoat a lighter shade to facilitate identification of each coat if multiple coats of same material are to be applied. Tint undercoats to match color of topcoat, but provide sufficient difference in shade of undercoats to distinguish each separate coat.

C. If undercoats or other conditions show through topcoat, apply additional coats until cured film has a uniform paint finish, color, and appearance.

D. Apply paints to produce surface films without cloudiness, spotting, holidays, laps, brush marks, roller tracking, runs, sags, ropiness, or other surface imperfections. Cut in sharp lines and color breaks.

E. Painting Fire Suppression, Plumbing, HVAC, Electrical, Communication, and Electronic Safety and Security Work:

1. Paint the following work where exposed in equipment rooms:

a. Equipment, including panelboards and switch gear.

NOT FOR BIDDING

b. Uninsulated metal piping.
c. Uninsulated plastic piping.
d. Pipe hangers and supports.
e. Metal conduit.
f. Plastic conduit.
g. Tanks that do not have factory-applied final finishes.
h. Duct, equipment, and pipe insulation having cotton or canvas insulation covering or other paintable jacket material.

2. Paint the following work where exposed in occupied spaces:

a. Equipment, including panelboards.
b. Uninsulated metal piping.
c. Uninsulated plastic piping.
d. Pipe hangers and supports.
e. Metal conduit.
f. Plastic conduit.
g. Duct, equipment, and pipe insulation having cotton or canvas insulation covering or other paintable jacket material.
h. Other items as directed by Architect.

3. Paint portions of internal surfaces of metal ducts, without liner, behind air inlets and outlets that are visible from occupied spaces.

3.4 FIELD QUALITY CONTROL

A. Dry Film Thickness Testing: Owner may engage the services of a qualified testing and inspecting agency to inspect and test paint for dry film thickness.

1. Contractor shall touch up and restore painted surfaces damaged by testing.
2. If test results show that dry film thickness of applied paint does not comply with paint manufacturer's written recommendations, Contractor shall pay for testing and apply additional coats as needed to provide dry film thickness that complies with paint manufacturer's written recommendations.

3.5 CLEANING AND PROTECTION

A. At end of each workday, remove rubbish, empty cans, rags, and other discarded materials from Project site.

B. After completing paint application, clean spattered surfaces. Remove spattered paints by washing, scraping, or other methods. Do not scratch or damage adjacent finished surfaces.

C. Protect work of other trades against damage from paint application. Correct damage to work of other trades by cleaning, repairing, replacing, and refinishing, as approved by Architect, and leave in an undamaged condition.

D. At completion of construction activities of other trades, touch up and restore damaged or defaced painted surfaces.

NOT FOR BIDDING

3.6 INTERIOR PAINTING SCHEDULE

A. Concrete Substrates, Traffic Surfaces:

1. Solvent-Based Clear Sealer System:

a. First Coat: Sealer, solvent based, for concrete floors.
b. Topcoat: Sealer, solvent based, for concrete floors.

B. CMU Substrates:

1. Institutional Low-Odor/VOC Latex Epoxy System:

a. Block Filler: Block filler, latex, interior/exterior.
b. Intermediate Coat: Latex, interior, institutional low odor/VOC, matching topcoat.
c. Topcoat: Latex, interior, institutional low odor/VOC, semi-gloss.

C. Steel Substrates:

1. Latex over Alkyd Primer System:

a. Prime Coat: Primer, alkyd, anti-corrosive, for metal.
b. Intermediate Coat: Latex, interior, matching topcoat.
c. Topcoat: Latex, interior, semi-gloss, (Gloss Level 5).

D. Galvanized-Metal Substrates:

1. Latex over Waterborne Primer System:

a. Prime Coat: Primer, galvanized, water based.
b. Intermediate Coat: Latex, interior, matching topcoat.
c. Topcoat: Latex, interior, semi-gloss, (Gloss Level 5).

E. Wood Substrates: Including wood trim and architectural woodwork.

1. Latex System:

a. Prime Coat: Primer, latex, for interior wood.
b. Intermediate Coat: Latex, interior, matching topcoat.
c. Topcoat: Latex, interior, semi-gloss, (Gloss Level 5).

F. Fiberglass and Plastic Substrates:

1. Latex System:

a. Prime Coat: Primer, bonding, water based.
b. Intermediate Coat: Latex, interior, matching topcoat.
c. Topcoat: Latex, interior, semi-gloss, (Gloss Level 5).

G. Gypsum Board Substrates:

1. Latex System:

NOT FOR BIDDING

a. Prime Coat: Latex, interior, matching topcoat.
b. Intermediate Coat: Latex, interior, matching topcoat.
c. Topcoat: Latex, interior, (Gloss Level 3).

2. Institutional Low-Odor/VOC Latex Epoxy System:

a. Block Filler: Block filler, latex, interior/exterior.
b. Intermediate Coat: Latex, interior, institutional low odor/VOC, matching topcoat.
c. Topcoat: Latex, interior, institutional low odor/VOC, semi-gloss.

END OF SECTION 099123

NOT FOR BIDDING

SECTION 099600 - HIGH-PERFORMANCE COATINGS

PART 1 - GENERAL

1.1 RELATED DOCUMENTS

A. Drawings and general provisions of the Contract, including General and Supplementary Conditions and Division 01 Specification Sections, apply to this section.

1.2 SUMMARY

A. Section includes surface preparation and the application of high-performance coating systems on the following substrates:

1. Interior Substrates:

a. Concrete, horizontal surfaces.

B. Related Requirements:

1. Section 099123 "Interior Painting" for general field painting.

1.3 DEFINITIONS

A. MPI Gloss Level 5: 35 to 70 units at 60 degrees, according to ASTM D 523.

B. MPI Gloss Level 6: 70 to 85 units at 60 degrees, according to ASTM D 523.

C. MPI Gloss Level 7: More than 85 units at 60 degrees, according to ASTM D 523.

1.4 ACTION SUBMITTALS

A. Product Data: For each type of product. Include preparation requirements and application instructions.

1. Include printout of current "MPI Approved Products List" for each product category specified, with the proposed product highlighted.
2. Indicate VOC content.

B. Samples for Initial Selection: For each type of topcoat product indicated.

C. Samples for Verification: For each type of coating system and each color and gloss of topcoat indicated.

1. Submit Samples on rigid backing, 8 inches (200 mm) square.
2. Apply coats on Samples in steps to show each coat required for system.

NOT FOR BIDDING

3. Label each coat of each Sample.
4. Label each Sample for location and application area.

D. Product List: Cross-reference to coating system and locations of application areas. Use same designations indicated on Drawings and in schedules. Include color designations.

1.5 MAINTENANCE MATERIAL SUBMITTALS

A. Furnish extra materials, from the same product run, that match products installed and that are packaged with protective covering for storage and identified with labels describing contents.

1. Coatings: 5 percent, but not less than 1 gal. (3.8 L) of each material and color applied.

1.6 DELIVERY, STORAGE, AND HANDLING

A. Store materials not in use in tightly covered containers in well-ventilated areas with ambient temperatures continuously maintained at not less than 45 deg F (7 deg C).

1. Maintain containers in clean condition, free of foreign materials and residue.
2. Remove rags and waste from storage areas daily.

1.7 FIELD CONDITIONS

A. Apply coatings only when temperature of surfaces to be coated and ambient air temperatures are between 50 and 95 deg F (10 and 35 deg C).

B. Do not apply coatings when relative humidity exceeds 85 percent; at temperatures less than 5 deg F (3 deg C) above the dew point; or to damp or wet surfaces.

C. Do not apply exterior coatings in snow, rain, fog, or mist.

PART 2 - PRODUCTS

2.1 MANUFACTURERS

A. Basis-of-Design Product: Subject to compliance with requirements, provide The Sherwin-Williams Company; products indicated or comparable product from one of the following:

1. Benjamin Moore & Co.
2. PPG Architectural Finishes, Inc.
3. Tnemec, Inc.

B. Source Limitations: Obtain paint materials from single source from single listed manufacturer.

1. Manufacturer's designations listed on a separate color schedule are for color reference only and do not indicate prior approval.

NOT FOR BIDDING

2.2 HIGH-PERFORMANCE COATINGS, GENERAL

A. MPI Standards: Products shall comply with MPI standards indicated and shall be listed in its "MPI Approved Products Lists."

B. Material Compatibility:

1. Materials for use within each paint system shall be compatible with one another and substrates indicated, under conditions of service and application as demonstrated by manufacturer, based on testing and field experience.
2. For each coat in a paint system, products shall be recommended in writing by topcoat manufacturers for use in paint system and on substrate indicated.
3. Products shall be of same manufacturer for each coat in a coating system.

C. Colors: Clear.

2.3 SOURCE QUALITY CONTROL

A. Testing of Coating Materials: Owner reserves the right to invoke the following procedure:

1. Owner will engage the services of a qualified testing agency to sample coating materials. Contractor will be notified in advance and may be present when samples are taken. If coating materials have already been delivered to Project site, samples may be taken at Project site. Samples will be identified, sealed, and certified by testing agency.
2. Testing agency will perform tests for compliance with product requirements.
3. Owner may direct Contractor to stop applying coatings if test results show materials being used do not comply with product requirements. Contractor shall remove noncomplying coating materials from Project site, pay for testing, and recoat surfaces coated with rejected materials. Contractor will be required to remove rejected materials from previously coated surfaces if, on recoating with complying materials, the two coatings are incompatible.

PART 3 - EXECUTION

3.1 EXAMINATION

A. Examine substrates and conditions, with Applicator present, for compliance with requirements for maximum moisture content and other conditions affecting performance of the Work.

B. Maximum Moisture Content of Substrates: When measured with an electronic moisture meter as follows:

1. Concrete: 12 percent.

C. Verify suitability of substrates, including surface conditions and compatibility, with existing finishes and primers.

D. Proceed with coating application only after unsatisfactory conditions have been corrected.

NOT FOR BIDDING

1. Application of coating indicates acceptance of surfaces and conditions.

3.2 PREPARATION

A. Comply with manufacturer's written instructions and recommendations in "MPI Architectural Painting Specification Manual" applicable to substrates and coating systems indicated.

B. Remove hardware, covers, plates, and similar items already in place that are removable and are not to be painted. If removal is impractical or impossible because of size or weight of item, provide surface-applied protection before surface preparation and painting.

1. After completing painting operations, use workers skilled in the trades involved to reinstall items that were removed. Remove surface-applied protection if any.

C. Clean substrates of substances that could impair bond of coatings, including dust, dirt, oil, grease, and incompatible paints and encapsulants.

1. Remove incompatible primers and reprime substrate with compatible primers or apply tie coat as required to produce coating systems indicated.

D. Concrete Substrates: Remove release agents, curing compounds, efflorescence, and chalk. Do not coat surfaces if moisture content or alkalinity of surfaces to be coated exceeds that permitted in manufacturer's written instructions.

1. Clean surfaces with pressurized water. Use pressure range of 1500 to 4000 psi (10 350 to 27 580 kPa).
2. Abrasive blast clean surfaces to comply with SSPC-SP 7/NACE No. 4.

3.3 APPLICATION

A. Apply high-performance coatings according to manufacturer's written instructions and recommendations in "MPI Architectural Painting Specification Manual."

1. Use applicators and techniques suited for coating and substrate indicated.
2. Coat surfaces behind movable equipment and furniture same as similar exposed surfaces. Before final installation, coat surfaces behind permanently fixed equipment or furniture with prime coat only.
3. Coat backsides of access panels, removable or hinged covers, and similar hinged items to match exposed surfaces.
4. Do not apply coatings over labels of independent testing agencies or equipment name, identification, performance rating, or nomenclature plates.

B. Tint each undercoat a lighter shade to facilitate identification of each coat if multiple coats of the same material are to be applied. Tint undercoats to match color of finish coat, but provide sufficient difference in shade of undercoats to distinguish each separate coat.

C. If undercoats or other conditions show through final coat, apply additional coats until cured film has a uniform coating finish, color, and appearance.

NOT FOR BIDDING

D. Apply coatings to produce surface films without cloudiness, spotting, holidays, laps, brush marks, runs, sags, ropiness, or other surface imperfections. Produce sharp glass lines and color breaks.

3.4 FIELD QUALITY CONTROL

A. Dry Film Thickness Testing: Owner may engage the services of a qualified testing and inspecting agency to inspect and test coatings for dry film thickness.

1. Contractor shall touch up and restore coated surfaces damaged by testing.
2. If test results show that dry film thickness of applied coating does not comply with coating manufacturer's written recommendations, Contractor shall pay for testing and apply additional coats as needed to provide dry film thickness that complies with coating manufacturer's written recommendations.

3.5 CLEANING AND PROTECTION

A. At end of each workday, remove rubbish, empty cans, rags, and other discarded materials from Project site.

B. After completing coating application, clean spattered surfaces. Remove spattered coatings by washing, scraping, or other methods. Do not scratch or damage adjacent finished surfaces.

C. Protect work of other trades against damage from coating operation. Correct damage to work of other trades by cleaning, repairing, replacing, and recoating, as approved by Architect, and leave in an undamaged condition.

D. At completion of construction activities of other trades, touch up and restore damaged or defaced coated surfaces.

3.6 INTERIOR HIGH-PERFORMANCE COATING SCHEDULE

A. Concrete Substrates, Horizontal Surfaces.

1. Pigmented Polyurethane over Epoxy Slip-Resistant Deck Coating System:

   a. Prime Coat: Epoxy, gloss: S-W Armorseal 1000 HS, B67W2001 Series, at 2.5 to 4.0 mils dry, per coat.
   b. Intermediate: Polyurethane, gloss matching topcoat.
   c. Topcoat: Polyurethane, two-component, pigmented, gloss: S-W Armorseal Urethane I HS Polyurethane, B65-60 Series, at 2.0 to 3.0 mils dry, per coat, with H&C SharlGrip slip-resistant aggregate.

END OF SECTION 099600

NOT FOR BIDDING

SECTION 101423 - PANEL SIGNAGE

PART 1 - GENERAL

1.1 RELATED DOCUMENTS

A. Drawings and general provisions of the Contract, including General and Supplementary Conditions and Division 01 Specification Sections, apply to this section.

1.2 SUMMARY

A. Section Includes:

1. Interior Handicapped Room Signs.
2. Room-identification signs.

B. Related Requirements:

1. Section 015000 "Temporary Facilities and Controls" for temporary Project identification signs and for temporary information and directional signs.

1.3 DEFINITIONS

A. Accessible: In accordance with the accessibility standard.

1.4 COORDINATION

A. Furnish templates for placement of sign-anchorage devices embedded in permanent construction by other installers.

B. Furnish templates for placement of electrical service embedded in permanent construction by other installers.

1.5 ACTION SUBMITTALS

A. Product Data: For each type of product.

B. Shop Drawings: For panel signs.

1. Include fabrication and installation details and attachments to other work.
2. Show sign mounting heights, locations of supplementary supports to be provided by others, and accessories.
3. Show message list, typestyles, graphic elements, including raised characters and Braille, and layout for each sign at least half size.

NOT FOR BIDDING

C. Samples for Initial Selection: For each type of sign assembly, exposed component, and exposed finish.

1. Include representative Samples of available typestyles and graphic symbols.

D. Samples for Verification: For each type of sign assembly showing all components and with the required finish(es), in manufacturer's standard size unless otherwise indicated and as follows:

1. Panel Signs: Full-size Sample.
2. Room-Identification Signs: Full-size Sample.
3. Variable Component Materials: Full-size Sample of each base material, character (letter, number, and graphic element) in each exposed color and finish not included in Samples above.
4. Exposed Accessories: Full-size Sample of each accessory type.

E. Sign Schedule: Use same designations specified or indicated on Drawings or in a sign schedule.

1.6 INFORMATIONAL SUBMITTALS

A. Qualification Data: For Installer and manufacturer.

B. Sample Warranty: For special warranty.

1.7 CLOSEOUT SUBMITTALS

A. Maintenance Data: For signs to include in maintenance manuals.

1.8 QUALITY ASSURANCE

A. Installer Qualifications: An entity that employs installers and supervisors who are trained and approved by manufacturer.

1.9 FIELD CONDITIONS

A. Field Measurements: Verify locations of anchorage devices and electrical service embedded in permanent construction by other installers by field measurements before fabrication, and indicate measurements on Shop Drawings.

1.10 WARRANTY

A. Special Warranty: Manufacturer agrees to repair or replace components of signs that fail in materials or workmanship within specified warranty period.

1. Failures include, but are not limited to, the following:

a. Deterioration of finishes beyond normal weathering.
b. Deterioration of embedded graphic image.

NOT FOR BIDDING

c. Separation or delamination of sheet materials and components.

2. Warranty Period: Five years from date of Substantial Completion.

PART 2 - PRODUCTS

2.1 PANEL SIGNS, GENERAL

A. Regional Materials: Panel signs shall be manufactured within 500 miles (800 km) of Project site.

2.2 PERFORMANCE REQUIREMENTS

A. Thermal Movements: For exterior signs, allow for thermal movements from ambient and surface temperature changes.

1. Temperature Change: 120 deg F (67 deg C), ambient; 180 deg F (100 deg C), material surfaces.

B. Regulatory Requirements: Comply with applicable provisions in The State of Delaware Architectural Accessibility Standards, the U.S. Architectural & Transportation Barriers Compliance Board's "Americans with Disabilities Act (ADA) and Architectural Barriers Act (ABA) Accessibility Guidelines for Buildings and Facilities" and ICC/ANSI A117.1, for signs designated as accessible.

2.3 SIGNS

A. Manufacturers: Subject to compliance with requirements, available manufacturers offering products that may be incorporated into the Work include, or equal to, the following:

1. Ace Sign Systems, Inc.
2. Advance Corporation, Braille-Tac Division.
3. Allen Industries, Inc.
4. Allen Markings International.
5. APCO Graphics, Inc.
6. ASE, Inc.
7. ASI Sign Systems, Inc.
8. Best Sign Systems Inc.
9. Bunting Graphics, Inc.
10. Clarke Systems.
11. Diskey Sign Company.
12. Fossil Industries, Inc.
13. I-Pro Corporation.
14. Mohawk Sign Systems.
15. Nelson-Harkins Industries.
16. Poblocki Sign Company, LLC.
17. Seton Identification Products.

NOT FOR BIDDING

18. Supersine Company (The); Division of Stamp-Rite, Inc.
19. Vista System.
20. Vomar Products, Inc.

B. Panel Sign: Sign with smooth, uniform surfaces; with message and characters having uniform faces, sharp corners, and precisely formed lines and profiles; and as follows:

1. Laminated-Sheet Sign: Photopolymer face sheet with raised graphics laminated to acrylic backing sheet to produce composite sheet.

   a. Composite-Sheet Thickness: 0.125 inch (3.18 mm).
   b. Color(s): As selected by Architect from manufacturer's full range.

2. Sign-Panel Perimeter: Finish edges smooth.

   a. Edge Condition: Beveled.
   b. Corner Condition in Elevation: Rounded.

3. Mounting: two-face tape.
4. Text and Typeface: Accessible raised characters and Braille, typeface as selected by Architect from manufacturer's full range and variable content as scheduled. Finish raised characters to contrast with background color, and finish Braille to match background color.

C. Room-Identification Sign: Sign with smooth, uniform surfaces; with message and characters having uniform faces, sharp corners, and precisely formed lines and profiles; and as follows:

1. Laminated-Sheet Sign: Photopolymer face sheet with raised graphics laminated to acrylic backing sheet to produce composite sheet.

   a. Composite-Sheet Thickness: 0.125 inch (3.18 mm).
   b. Color(s): As selected by Architect from manufacturer's full range.

2. Sign-Panel Perimeter: Finish edges smooth.

   a. Edge Condition: Beveled.
   b. Corner Condition in Elevation: Rounded.

3. Mounting: two-face tape.
4. Text and Typeface: Accessible raised characters and Braille, typeface as selected by Architect from manufacturer's full range and variable content as scheduled. Finish raised characters to contrast with background color, and finish Braille to match background color.

2.4 ACCESSORIES

A. Fasteners and Anchors: Manufacturer's standard as required for secure anchorage of signage, noncorrosive and compatible with each material joined, and complying with the following:

1. Use concealed fasteners and anchors unless indicated to be exposed.

NOT FOR BIDDING

B. Adhesives: As recommended by sign manufacturer and with a VOC content of 70 g/L or less for adhesives used inside the weatherproofing system and applied on-site when calculated according to 40 CFR 59, Subpart D (EPA Method 24).

C. Two-Face Tape: Manufacturer's standard high-bond, foam-core tape, 0.045 inch (1.14 mm) thick, with adhesive on both sides.

D. Bituminous Paint: Cold-applied asphalt emulsion complying with ASTM D 1187.

2.5 FABRICATION

A. General: Provide manufacturer's standard sign assemblies according to requirements indicated.

1. Preassemble signs and assemblies in the shop to greatest extent possible. Disassemble signs and assemblies only as necessary for shipping and handling limitations. Clearly mark units for reassembly and installation; apply markings in locations concealed from view after final assembly.
2. Mill joints to a tight, hairline fit. Form assemblies and joints exposed to weather to resist water penetration and retention.
3. Comply with AWS for recommended practices in welding and brazing. Provide welds and brazes behind finished surfaces without distorting or discoloring exposed side. Clean exposed welded and brazed connections of flux, and dress exposed and contact surfaces.
4. Conceal connections if possible; otherwise, locate connections where they are inconspicuous.
5. Internally brace signs for stability and for securing fasteners.
6. Provide rebates, lugs, and brackets necessary to assemble components and to attach to existing work. Drill and tap for required fasteners. Use concealed fasteners where possible; use exposed fasteners that match sign finish.

B. Signs with Changeable Message Capability: Fabricate signs to allow insertion of changeable messages as follows:

1. For slide-in changeable inserts, fabricate slot without burrs or constrictions that inhibit function. Furnish initial changeable insert. Subsequent changeable inserts are by Owner. Furnish two blank inserts for each sign for Owner's use.

2.6 GENERAL FINISH REQUIREMENTS

A. Protect mechanical finishes on exposed surfaces from damage by applying a strippable, temporary protective covering before shipping.

B. Appearance of Finished Work: Noticeable variations in same piece are not acceptable. Variations in appearance of adjoining components are acceptable if they are within the range of approved samples and are assembled or installed to minimize contrast.

C. Directional Finishes: Run grain with long dimension of each piece and perpendicular to long dimension of finished trim or border surface unless otherwise indicated.

NOT FOR BIDDING

D. Organic, Anodic, and Chemically Produced Finishes: Apply to formed metal after fabrication but before applying contrasting polished finishes on raised features unless otherwise indicated.

PART 3 - EXECUTION

3.1 EXAMINATION

A. Examine substrates, areas, and conditions, with Installer present, for compliance with requirements for installation tolerances and other conditions affecting performance of signage work.

B. Verify that sign-support surfaces are within tolerances to accommodate signs without gaps or irregularities between backs of signs and support surfaces unless otherwise indicated.

C. Verify that anchor inserts are correctly sized and located to accommodate signs.

D. Verify that electrical service is correctly sized and located to accommodate signs.

E. Proceed with installation only after unsatisfactory conditions have been corrected.

3.2 INSTALLATION

A. General: Install signs using mounting methods indicated and according to manufacturer's written instructions.

1. Install signs level, plumb, true to line, and at locations and heights indicated, with sign surfaces free of distortion and other defects in appearance.
2. Install signs so they do not protrude or obstruct according to the accessibility standard.
3. Before installation, verify that sign surfaces are clean and free of materials or debris that would impair installation.
4. Corrosion Protection: Coat concealed surfaces of exterior aluminum in contact with grout, concrete, masonry, wood, or dissimilar metals, with a heavy coat of bituminous paint.

B. Room-Identification Signs and Other Accessible Signage: Install in locations on walls according to accessibility standard.

C. Mounting Methods:

1. Two-Face Tape: Clean bond-breaking materials from substrate surface and remove loose debris. Apply tape strips symmetrically to back of sign and of suitable quantity to support weight of sign without slippage. Keep strips away from edges to prevent visibility at sign edges. Place sign in position, and push to engage tape adhesive.

D. Signs Mounted on Glass: Provide opaque sheet matching sign material and finish onto opposite side of glass to conceal back of sign.

NOT FOR BIDDING

3.3 ADJUSTING AND CLEANING

A. Remove and replace damaged or deformed signs and signs that do not comply with specified requirements. Replace signs with damaged or deteriorated finishes or components that cannot be successfully repaired by finish touchup or similar minor repair procedures.

B. Remove temporary protective coverings and strippable films as signs are installed.

C. On completion of installation, clean exposed surfaces of signs according to manufacturer's written instructions, and touch up minor nicks and abrasions in finish. Maintain signs in a clean condition during construction and protect from damage until acceptance by Owner.

3.4 SIGN SCHEDULE

A. Sign Type PS-1:

1. Sign Size: 6 inch x 8 inch.
2. Message Panel Material: Laminated Acrylic Sheet.
3. Message Panel Finish/Color: As selected by Architect from manufacturer's full range.
4. Background Finish/Color: As selected by Architect from manufacturer's full range.
5. Character Size: 1 inch.
6. Character Finish/Color: As selected by Architect from manufacturer's full range.
7. Text: MEN.
8. Symbol: Male & Wheelchair.
9. Braille: Yes.
10. Location:
    a. Building B: At door 501/1.
    b. Building E: In Corridor 302 (Qty 2), field verify locations
11. Quantity: Three (3)

B. Sign Type PS-2:

1. Sign Size: 6 inch x 8 inch.
2. Message Panel Material: Laminated Acrylic Sheet.
3. Message Panel Finish/Color: As selected by Architect from manufacturer's full range.
4. Background Finish/Color: As selected by Architect from manufacturer's full range.
5. Character Size: 1 inch.
6. Character Finish/Color: As selected by Architect from manufacturer's full range.
7. Text: WOMEN.
8. Symbol: Female & Wheelchair.
9. Braille: Yes.
10. Location:
    a. Building B: At door 501/1.
    b. Building E: In Corridor 302 (Qty 2), field verify locations
11. Quantity: Three (3)

C. Sign Type PS-3:

1. Sign Size: 6 inch x 8 inch.
2. Message Panel Material: Laminated Acrylic Sheet.

NOT FOR BIDDING

3. Message Panel Finish/Color: As selected by Architect from manufacturer's full range.
4. Background Finish/Color: As selected by Architect from manufacturer's full range.
5. Character Size: 1 inch.
6. Character Finish/Color: As selected by Architect from manufacturer's full range.
7. Text: TOILET.
8. Symbol: Male/Female & Wheelchair.
9. Braille: Yes.
10. Location:
    a. Building B: At doors 504/1, 505/1, 506/1.
    b. Building C: At door 410/1.
11. Quantity: Four (4)

D. Sign Type PS-4:

1. Sign Size: 6 inch x 8 inch.
2. Message Panel Material: Laminated Acrylic Sheet.
3. Message Panel Finish/Color: As selected by Architect from manufacturer's full range.
4. Background Finish/Color: As selected by Architect from manufacturer's full range.
5. Character Size: 1 inch.
6. Character Finish/Color: As selected by Architect from manufacturer's full range.
7. Room Name: "MECH".
8. Symbol: No.
9. Braille: Yes.
10. Location:
    a. Building B: At door 503/1
    b. Building C: At door 408/1
    c. Building No. 3:
11. Quantity: Two (2)

E. Sign Type PS-5:

1. Sign Size: 6 inch x 8 inch.
2. Message Panel Material: Laminated Acrylic Sheet.
3. Message Panel Finish/Color: As selected by Architect from manufacturer's full range.
4. Background Finish/Color: As selected by Architect from manufacturer's full range.
5. Character Size: 1 inch.
6. Character Finish/Color: As selected by Architect from manufacturer's full range.
7. Room Name: "RETAIL SHOP".
8. Symbol: No.
9. Braille: Yes.
10. Location:
    a. Building C: At doors 400/1, 400/2
11. Quantity: Two (2)

F. Sign Type PS-6:

1. Sign Size: 6 inch x 8 inch.
2. Message Panel Material: Laminated Acrylic Sheet.
3. Message Panel Finish/Color: As selected by Architect from manufacturer's full range.
4. Background Finish/Color: As selected by Architect from manufacturer's full range.
5. Character Size: 1 inch.

NOT FOR BIDDING

6. Character Finish/Color: As selected by Architect from manufacturer's full range.
7. Room Name: "OFFICE".
8. Symbol: No.
9. Braille: Yes.
10. Location:
    a. Building C: At doors 405/1, 403/1, 401/1
11. Quantity: Three (3)

G. Sign Type PS-7:

1. Sign Size: 6 inch x 8 inch.
2. Message Panel Material: Laminated Acrylic Sheet.
3. Message Panel Finish/Color: As selected by Architect from manufacturer's full range.
4. Background Finish/Color: As selected by Architect from manufacturer's full range.
5. Character Size: 1 inch.
6. Character Finish/Color: As selected by Architect from manufacturer's full range.
7. Room Name: "STORAGE".
8. Symbol: No.
9. Braille: Yes.
10. Location:
    a. Building C: At door 409/1
11. Quantity: One (1)

H. Sign Type PS-8:

1. Sign Size: 6 inch x 8 inch.
2. Message Panel Material: Laminated Acrylic Sheet.
3. Message Panel Finish/Color: As selected by Architect from manufacturer's full range.
4. Background Finish/Color: As selected by Architect from manufacturer's full range.
5. Character Size: 1 inch.
6. Character Finish/Color: As selected by Architect from manufacturer's full range.
7. Room Name: "JAN".
8. Symbol: No.
9. Braille: Yes.
10. Location:
    a. Building C: At door 411/1
11. Quantity: One (1)

I. Sign Type PS-9:

1. Sign Size: 6 inch x 8 inch.
2. Message Panel Material: Laminated Acrylic Sheet.
3. Message Panel Finish/Color: As selected by Architect from manufacturer's full range.
4. Background Finish/Color: As selected by Architect from manufacturer's full range.
5. Character Size: 1 inch.
6. Character Finish/Color: As selected by Architect from manufacturer's full range.
7. Room Name: "KITCHEN".
8. Symbol: No.
9. Braille: Yes.
10. Location:
    a. Building C: At doors 404/1, 404/2

NOT FOR BIDDING

11. Quantity: Two (2)

J. Sign Type PS-10:

1. Sign Size: 6 inch x 8 inch.
2. Message Panel Material: Laminated Acrylic Sheet.
3. Message Panel Finish/Color: As selected by Architect from manufacturer's full range.
4. Background Finish/Color: As selected by Architect from manufacturer's full range.
5. Character Size: 1 inch.
6. Character Finish/Color: As selected by Architect from manufacturer's full range.
7. Room Name: "ACID ROOM".
8. Symbol: No.
9. Braille: Yes.
10. Location:
    a. Building P: At door 102/1
11. Quantity: One (1)

K. Sign Type PS-11:

1. Sign Size: 6 inch x 8 inch.
2. Message Panel Material: Laminated Acrylic Sheet.
3. Message Panel Finish/Color: As selected by Architect from manufacturer's full range.
4. Background Finish/Color: As selected by Architect from manufacturer's full range.
5. Character Size: 1 inch.
6. Character Finish/Color: As selected by Architect from manufacturer's full range.
7. Room Name: "CHEMICAL ROOM".
8. Symbol: No.
9. Braille: Yes.
10. Location:
    a. Building P: At door 101/1
11. Quantity: One (1)

L. Sign Type PS-12:

1. Sign Size: 6 inch x 8 inch.
2. Message Panel Material: Laminated Acrylic Sheet.
3. Message Panel Finish/Color: As selected by Architect from manufacturer's full range.
4. Background Finish/Color: As selected by Architect from manufacturer's full range.
5. Character Size: 1 inch.
6. Character Finish/Color: As selected by Architect from manufacturer's full range.
7. Room Name: "POOL MECH".
8. Symbol: No.
9. Braille: Yes.
10. Location:
    a. Building P: At doors 100/5, 105/1
11. Quantity: Two (2)

M. Sign Type PS-13:

1. Sign Size: 6 inch x 8 inch.
2. Message Panel Material: Laminated Acrylic Sheet.

NOT FOR BIDDING

3. Message Panel Finish/Color: As selected by Architect from manufacturer's full range.
4. Background Finish/Color: As selected by Architect from manufacturer's full range.
5. Character Size: 1 inch.
6. Character Finish/Color: As selected by Architect from manufacturer's full range.
7. Room Name: "MECH/ELEC".
8. Symbol: No.
9. Braille: Yes.
10. Location:
    a. Building P: At door 104/1
11. Quantity: One (1)

END OF SECTION 101423

NOT FOR BIDDING

(PAGE LEFT BLANK)

NOT FOR BIDDING

SECTION 102113 - TOILET COMPARTMENTS

PART 1 - GENERAL

1.1 RELATED DOCUMENTS

A. Drawings and general provisions of the Contract, including General and Supplementary Conditions and Division 01 Specification Sections, apply to this Section.

1.2 SUMMARY

A. Section Includes:

1. Solid-polymer toilet compartments configured as[toilet enclosures and urinal screens.

B. Related Sections:

1. Division 10 Section "Toilet, Bath, and Laundry Accessories" for toilet tissue dispensers, grab bars, purse shelves, and similar accessories.

1.3 ACTION SUBMITTALS

A. Product Data: For each type of product indicated. Include construction details, material descriptions, dimensions of individual components and profiles, and finishes.

B. Shop Drawings: For toilet compartments. Include plans, elevations, sections, details, and attachments to other work.

1. Show locations of cutouts for compartment-mounted toilet accessories.
2. Show locations of reinforcements for compartment-mounted grab bars.
3. Show locations of centerlines of toilet fixtures.

C. Samples for Initial Selection: For each type of unit indicated. Include Samples of hardware and accessories involving material and color selection.

D. Samples for Verification: For the following products, in manufacturer's standard sizes unless otherwise indicated:

1. Each type of material, color, and finish required for units, prepared on 6-inch- (152-mm-) square Samples of same thickness and material indicated for Work.
2. Each type of hardware and accessory.

1.4 INFORMATIONAL SUBMITTALS

A. Product Certificates: For each type of toilet compartment, from manufacturer.

NOT FOR BIDDING

1.5 CLOSEOUT SUBMITTALS

A. Maintenance Data: For toilet compartments to include in maintenance manuals.

1.6 QUALITY ASSURANCE

A. Comply with requirements in GSA's CID-A-A-60003, "Partitions, Toilets, Complete."

B. Surface-Burning Characteristics: As determined by testing identical products according to ASTM E 84, or another standard acceptable to authorities having jurisdiction, by a qualified testing agency. Identify products with appropriate markings of applicable testing agency.

1. Flame-Spread Index: 25 or less.
2. Smoke-Developed Index: 450 or less.

C. Regulatory Requirements: Comply with applicable provisions in The State of Delaware Architectural Accessibility Standards, the U.S. Architectural & Transportation Barriers Compliance Board's "Americans with Disabilities Act (ADA) and Architectural Barriers Act (ABA) Accessibility Guidelines for Buildings and Facilities" and ICC/ANSI A117.1, for toilet compartments designated as accessible.

1.7 PROJECT CONDITIONS

A. Field Measurements: Verify actual locations of toilet fixtures, walls, columns, ceilings, and other construction contiguous with toilet compartments by field measurements before fabrication.

PART 2 - PRODUCTS

2.1 MATERIALS

A. Aluminum Castings: ASTM B 26/B 26M.

B. Aluminum Extrusions: ASTM B 221 (ASTM B 221M).

C. Brass Castings: ASTM B 584.

D. Brass Extrusions: ASTM B 455.

E. Steel Sheet: Commercial steel sheet for exposed applications; mill phosphatized and selected for smoothness.

1. Electrolytically Zinc Coated: ASTM A 879/A 879M, 01Z (03G).
2. Hot-Dip Galvanized: ASTM A 653/A 653M, either hot-dip galvanized or galvannealed.

F. Stainless-Steel Sheet: ASTM A 666, Type 304, stretcher-leveled standard of flatness.

G. Stainless-Steel Castings: ASTM A 743/A 743M.

NOT FOR BIDDING

2.2 SOLID-POLYMER UNITS

A. Basis-of-Design Product: Subject to compliance with requirements, provide General Partitions or comparable product by one of the following:

1. Bradley Corporation; Mills Partitions.
2. Sanymetal; a Crane Plumbing Company.
3. Global Partitions

B. Door, Panel, and Pilaster Construction: Solid, high-density polyethylene (HDPE) or polypropylene (PP) panel material, not less than 1 inch (25 mm) thick, seamless, with eased edges, , no-sightline system, and with homogenous color and pattern throughout thickness of material.

1. Color and Pattern: One color and pattern in each room as selected by Architect from manufacturer's full range of colors and patterns.

C. Pilaster Shoes and Sleeves (Caps): Manufacturer's standard design; stainless steel.

1. Polymer Color and Pattern: Matching pilaster.

D. Brackets (Fittings):

1. Full-Height (Continuous) Type: Manufacturer's standard design; stainless steel.

E. Heat-Sink Strip: Manufacturer's standard continuous, extruded-aluminum strip fastened to exposed bottom edges of solid-polymer components to prevent burning.

2.3 ACCESSORIES

A. Hardware and Accessories: Except where indicated, provide manufacturer's standard design, heavy-duty operating hardware and accessories.

1. Material: Stainless steel.

B. Overhead Bracing: Manufacturer's standard continuous, extruded-aluminum head rail with antigrip profile and in manufacturer's standard finish.

C. Anchorages and Fasteners: Manufacturer's standard exposed fasteners of stainless steel, finished to match hardware, with theft-resistant-type heads. Provide sex-type bolts for through-bolt applications. For concealed anchors, use hot-dip galvanized or other rust-resistant, protective-coated steel.

2.4 FABRICATION

A. Overhead-Braced Units: Provide manufacturer's standard corrosion-resistant supports, leveling mechanism, fasteners, and anchors at pilasters to suit floor conditions. Make provisions for setting and securing continuous head rail at top of each pilaster. Provide shoes at pilasters to conceal supports and leveling mechanism.

NOT FOR BIDDING

B. Floor-Anchored Units: Provide manufacturer's standard corrosion-resistant anchoring assemblies complete with threaded rods, lock washers, and leveling adjustment nuts at pilasters for structural connection to floor. Provide shoes at pilasters to conceal anchorage.

C. Doors: Unless otherwise indicated, provide 24-inch- (610-mm-) wide in-swinging doors for standard toilet compartments and 36-inch- (914-mm-) wide out-swinging doors with a minimum 32-inch- (813-mm-) wide clear opening for compartments indicated to be accessible to people with disabilities.

1. Hinges: Type 304, 0.067-inch (1.6-mm-) thick stainless steel; left-handed, continuous, heavy-duty self-closing type, adjustable to hold doors open at any angle up to 90 degrees; with stainless steel pin and adjustable spring mechanism; nylon bearings; and tamper-proof fasteners, concealed when door is in closed position.

a. Product and Finish: HG-907-TP; Market Architectural Products, Inc., BHMA 630.

2. Latch and Keeper: Manufacturer's standard surface-mounted latch unit designed for emergency access and with combination rubber-faced door strike and keeper. Provide units that comply with accessibility requirements of authorities having jurisdiction at compartments indicated to be accessible to people with disabilities.
3. Coat Hook: Manufacturer's standard combination hook and rubber-tipped bumper, sized to prevent door from hitting compartment mounted accessories.
4. Door Bumper: Manufacturer's standard rubber-tipped bumper at out-swinging doors.
5. Door Pull: Manufacturer's standard unit at out-swinging doors that complies with accessibility requirements of authorities having jurisdiction. Provide units on both sides of doors at compartments indicated to be accessible to people with disabilities.

PART 3 - EXECUTION

3.1 INSTALLATION

A. General: Comply with manufacturer's written installation instructions. Install units rigid, straight, level, and plumb. Secure units in position with manufacturer's recommended anchoring devices.

1. Maximum Clearances:

a. Pilasters and Panels: 1/2 inch (13 mm).
b. Panels and Walls: 1 inch (25 mm).

2. Stirrup Brackets: Secure panels to walls and to pilasters with continuous brackets.

B. Overhead-Braced Units: Secure pilasters to floor and level, plumb, and tighten. Secure continuous head rail to each pilaster with not less than two fasteners. Hang doors to align tops of doors with tops of panels and adjust so tops of doors are parallel with overhead brace when doors are in closed position.

NOT FOR BIDDING

C. Floor-Anchored Urinal Screens: Set pilasters with anchors penetrating not less than 2 inches (50 mm) into structural floor, unless otherwise indicated in manufacturer's written instructions. Set units level and plumb and to resist lateral impact.

3.2 ADJUSTING

A. Hardware Adjustment: Adjust and lubricate hardware according to hardware manufacturer's written instructions for proper operation. Set hinges on in-swinging doors to hold doors open approximately 30 degrees from closed position when unlatched. Set hinges on out-swinging doors to return doors to fully closed position.

END OF SECTION 102113

NOT FOR BIDDING

(PAGE LEFT BLANK)

NOT FOR BIDDING

SECTION 102800 - TOILET, BATH, AND LAUNDRY ACCESSORIES

PART 1 - GENERAL

1.1 RELATED DOCUMENTS

A. Drawings and general provisions of the Contract, including General and Supplementary Conditions and Division 01 Specification Sections, apply to this Section.

1.2 SUMMARY

A. Section Includes:

1. Washroom accessories.
2. Underlavatory guards.
3. Custodial accessories.

B. Related Sections:

1. Division 09 Section "Tiling" for ceramic toilet and bath accessories.

1.3 ACTION SUBMITTALS

A. Product Data: For each type of product indicated. Include the following:

1. Construction details and dimensions.
2. Anchoring and mounting requirements, including requirements for cutouts in other work and substrate preparation.
3. Material and finish descriptions.
4. Features that will be included for Project.
5. Manufacturer's warranty.

B. Samples: Full size, for each accessory item to verify design, operation, and finish requirements.

1. Approved full-size Samples will be returned and may be used in the Work.

C. Product Schedule: Indicating types, quantities, sizes, and installation locations by room of each accessory required.

1. Identify locations using room designations indicated.
2. Identify products using designations indicated.

1.4 INFORMATIONAL SUBMITTALS

A. Warranty: Sample of special warranty.

NOT FOR BIDDING

1.5 CLOSEOUT SUBMITTALS

A. Maintenance Data: For toilet and bath accessories to include in maintenance manuals.

1.6 QUALITY ASSURANCE

A. Source Limitations: For products listed together in the same Part 2 articles, obtain products from single source from single manufacturer.

B. Electrical Components, Devices, and Accessories: Listed and labeled as defined in NFPA 70, by a qualified testing agency, and marked for intended location and application.

C. Regulatory Requirements: Comply with applicable provisions in The State of Delaware Architectural Accessibility Standards, the U.S. Architectural & Transportation Barriers Compliance Board's "Americans with Disabilities Act (ADA) and Architectural Barriers Act (ABA) Accessibility Guidelines for Buildings and Facilities" and ICC/ANSI A117.1, for toilet accessories designated as accessible.

1.7 COORDINATION

A. Coordinate accessory locations with other work to prevent interference with clearances required for access by people with disabilities, and for proper installation, adjustment, operation, cleaning, and servicing of accessories.

B. Deliver inserts and anchoring devices set into concrete or masonry as required to prevent delaying the Work.

1.8 WARRANTY

A. Special Mirror Warranty: Manufacturer's standard form in which manufacturer agrees to replace mirrors that develop visible silver spoilage defects and that fail in materials or workmanship within specified warranty period.

1. Warranty Period: 15 years from date of Substantial Completion.

PART 2 - PRODUCTS

2.1 MATERIALS

A. Stainless Steel: ASTM A 666, Type 304, 0.031-inch (0.8-mm) minimum nominal thickness unless otherwise indicated.

B. Brass: ASTM B 19, flat products; ASTM B 16/B 16M, rods, shapes, forgings, and flat products with finished edges; or ASTM B 30, castings.

C. Steel Sheet: ASTM A 1008/A 1008M, Designation CS (cold rolled, commercial steel), 0.036-inch (0.9-mm) minimum nominal thickness.

NOT FOR BIDDING

D. Galvanized-Steel Sheet: ASTM A 653/A 653M, with G60 (Z180) hot-dip zinc coating.

E. Galvanized-Steel Mounting Devices: ASTM A 153/A 153M, hot-dip galvanized after fabrication.

F. Fasteners: Screws, bolts, and other devices of same material as accessory unit and tamper-and-theft resistant where exposed, and of galvanized steel where concealed.

G. Chrome Plating: ASTM B 456, Service Condition Number SC 2 (moderate service).

H. Mirrors: ASTM C 1503, Mirror Glazing Quality, clear-glass mirrors, nominal 6.0 mm thick.

I. ABS Plastic: Acrylonitrile-butadiene-styrene resin formulation.

2.2 PUBLIC-USE WASHROOM ACCESSORIES

A. Manufacturers: Subject to compliance with requirements, available manufacturers offering products that may be incorporated into the Work include, but are not limited to, the following:

1. A & J Washroom Accessories, Inc.
2. American Specialties, Inc.
3. Bobrick Washroom Equipment, Inc.
4. Bradley Corporation.
5. GAMCO Specialty Accessories; a division of Bobrick Washroom Equipment, Inc.
6. Kimberly Clack
7. Tubular Specialties Manufacturing, Inc.

B. Paper Towel Dispenser (N):

1. Product: Provided by owners (NIC).
2. Mounting: Surface.

C. Toilet Tissue Dispenser (A):

1. Basis-of-Design Product: Kimberly Clack 09608.
2. Mounting: Surface.

D. Liquid-Soap Dispenser (I):

1. Basis-of-Design Product: Kimberly Clark 92148, hand free.
2. Mounting: Surface.

E. Feminine Napkin Disposal (B):

1. Basis-of-Design Product: Plastic Hosprco 250-201W
2. Mounting: Surface.

F. Grab Bar (D):

1. Basis-of-Design Product: Bobrick B-6806.99-36.
2. Mounting: Flanges with concealed fasteners.

NOT FOR BIDDING

3. Material: Stainless steel, 0.05 inch (1.3 mm) thick.

   a. Finish: Smooth, No. 4 finish (satin) on ends and slip-resistant texture in grip area.

4. Outside Diameter: 1-1/2 inches (38 mm).
5. Configuration and Length: As indicated on Drawings.

G. Grab Bar (C):

1. Basis-of-Design Product: Bobrick B-6806.99-42.
2. Mounting: Flanges with concealed fasteners.
3. Material: Stainless steel, 0.05 inch (1.3 mm) thick.

   a. Finish: Smooth, No. 4 finish (satin) on ends and slip-resistant texture in grip area.

4. Outside Diameter: 1-1/2 inches (38 mm).
5. Configuration and Length: As indicated on Drawings.

H. Grab Bar (H):

1. Basis-of-Design Product: Bobrick B-6806.99-18.
2. Mounting: Flanges with concealed fasteners.
3. Material: Stainless steel, 0.05 inch (1.3 mm) thick.

   a. Finish: Smooth, No. 4 finish (satin) on ends and slip-resistant texture in grip area.

4. Outside Diameter: 1-1/2 inches (38 mm).
5. Configuration and Length: As indicated on Drawings.

I. Mirror Unit (F):

1. Basis-of-Design Product: Bobrick B-165.
2. Frame: Stainless-steel channel.

   a. Corners: Manufacturer's standard.

3. Hangers: Produce rigid, tamper- and theft-resistant installation, using method indicated below.

   a. One-piece, galvanized-steel, wall-hanger device with spring-action locking mechanism to hold mirror unit in position with no exposed screws or bolts.
   b. Wall bracket of galvanized steel, equipped with concealed locking devices requiring a special tool to remove.

4. Size: 18” w x 36” h.

J. Mirror Unit (G):

1. Description: Custom.
2. Mirror Glass: 1/4” (6mm) glass mirror.
3. Frame: Stainless-steel channel.

NOT FOR BIDDING

a. Corners: Manufacturer's standard.

4. Hangers: Produce rigid, tamper- and theft-resistant installation, using method indicated below.

a. One-piece, galvanized-steel, wall-hanger device with spring-action locking mechanism to hold mirror unit in position with no exposed screws or bolts.
b. Wall bracket of galvanized steel, equipped with concealed locking devices requiring a special tool to remove.

5. Size: 84” w x 36” h.

K. Robe Hook (J):

1. Basis-of-Design Product: Bobrick B-6827.
2. Description: Double-prong unit.
3. Material and Finish: Stainless steel, No. 4 finish (satin).

2.3 WARM-AIR DRYERS

A. Manufacturers: Subject to compliance with requirements, available manufacturers offering products that may be incorporated into the Work include, but are not limited to, the following:

1. A & J Washroom Accessories, Inc.
2. American Dryer, Inc.
3. American Specialties, Inc.
4. Bobrick Washroom Equipment, Inc.
5. Bradley Corporation.
6. Excel Dryer Corporation.
7. GAMCO Specialty Accessories, a division of Bobrick Washroom Equipment, Inc.
8. Tubular Specialties Manufacturing, Inc.
9. World Dryer Corporation.

B. Warm-Air Dryer (E):

1. Basis-of-Design Product: Excel Dryer, Inc., Xlerator XL-SB.
2. Mounting: Semirecessed.
3. Operation: Electronic-sensor activated with timed power cut-off switch.

a. Operation Time: 35seconds (max).

4. Cover Material and Finish: Stainless steel, No. 4 finish (satin).
5. Accessories: ADA stainless steel recess kit 40502.
6. Electrical Requirements: 208-240 V, 7 A, 1500 W.

2.4 CHILDCARE ACCESSORIES

A. See Editing Instruction No. 1 in the Evaluations for cautions about naming manufacturers. Retain one of first two paragraphs and list of manufacturers below. See Section 016000 "Product Requirements."

NOT FOR BIDDING

B. Manufacturers: Subject to compliance with requirements, available manufacturers offering products that may be incorporated into the Work include, but are not limited to, the following:

1. American Specialties, Inc.
2. Brocar Products, Inc.
3. Diaper Deck & Company, Inc.
4. GAMCO Specialty Accessories; a division of Bobrick Washroom Equipment, Inc.
5. Koala Kare Products; a division of Bobrick Washroom Equipment, Inc.
6. SSC, Inc.
7. Tubular Specialties Manufacturing, Inc.

C. Diaper-Changing Station (K):

1. Basis-of-Design Product: Bobrick KB110SSRE.
2. Description: Horizontal unit that opens by folding down from stored position and with child-protection strap.

   a. Engineered to support a minimum of 250-lb (113-kg) static load when opened.

3. Mounting: Recessed.
4. Operation: By pneumatic shock-absorbing mechanism.
5. Material and Finish: Stainless steel, No. 4 finish (satin), with replaceable insulated polystyrene tray liner and rounded plastic corners.
6. Liner Dispenser: Built in.

2.5 UNDERLAVATORY GUARDS

A. Manufacturers: Subject to compliance with requirements, available manufacturers offering products that may be incorporated into the Work include, but are not limited to, the following:

1. Plumberex Specialty Products, Inc.
2. Truebro by IPS Corporation.

B. Underlavatory Guard (L):

1. Description: Insulating pipe covering for supply and drain piping assemblies that prevent direct contact with and burns from piping; allow service access without removing coverings.
2. Material and Finish: Antimicrobial, molded plastic, white.

2.6 CUSTODIAL ACCESSORIES

A. Manufacturers: Subject to compliance with requirements, available manufacturers offering products that may be incorporated into the Work include, but are not limited to, the following:

1. A & J Washroom Accessories, Inc.
2. American Specialties, Inc.
3. Bobrick Washroom Equipment, Inc.
4. Bradley Corporation.

NOT FOR BIDDING

5. GAMCO Specialty Accessories; a division of Bobrick Washroom Equipment, Inc.
6. Tubular Specialties Manufacturing, Inc.

B. Mop and Broom Holder (M):

1. Basis-of-Design Product: Bobrick B-239x24.
2. Description: Unit with shelf, hooks, holders, and rod suspended beneath shelf.
3. Length: 24 inches.
4. Hooks: Four.
5. Mop/Broom Holders: Three, spring-loaded, rubber hat, cam type.
6. Material and Finish: Stainless steel, No. 4 finish (satin).

a. Shelf: Not less than nominal 0.05-inch- (1.3-mm-) thick stainless steel.
b. Rod: Approximately 1/4-inch- (6-mm-) diameter stainless steel.

2.7 FABRICATION

A. General: Fabricate units with tight seams and joints, and exposed edges rolled. Hang doors and access panels with full-length, continuous hinges. Equip units for concealed anchorage and with corrosion-resistant backing plates.

B. Keys: Provide universal keys for internal access to accessories for servicing and resupplying. Provide minimum of six keys to Owner's representative.

PART 3 - EXECUTION

3.1 INSTALLATION

A. Install accessories according to manufacturers' written instructions, using fasteners appropriate to substrate indicated and recommended by unit manufacturer. Install units level, plumb, and firmly anchored in locations and at heights indicated.

B. Grab Bars: Install to withstand a downward load of at least 250 lbf (1112 N), when tested according to ASTM F 446.

3.2 ADJUSTING AND CLEANING

A. Adjust accessories for unencumbered, smooth operation. Replace damaged or defective items.

B. Remove temporary labels and protective coatings.

C. Clean and polish exposed surfaces according to manufacturer's written recommendations.

END OF SECTION 102800

NOT FOR BIDDING

(PAGE LFET BLANK)

NOT FOR BIDDING

SECTION 104413 - FIRE EXTINGUISHER CABINETS

PART 1 - GENERAL

1.1 RELATED DOCUMENTS

A. Drawings and general provisions of the Contract, including General and Supplementary Conditions and Division 01 Specification Sections, apply to this section.

1.2 SUMMARY

A. Section Includes:

1. Fire protection cabinets for the following:

a. Portable fire extinguishers.

B. Related Sections:

1. Division 09 painting Sections for field painting fire protection cabinets.
2. Division 10 Section "Fire Extinguishers."

1.3 ACTION SUBMITTALS

A. Product Data: For each type of product indicated. Include construction details, material descriptions, dimensions of individual components and profiles, and finishes for fire protection cabinets.

1. Fire Protection Cabinets: Include roughing-in dimensions, details showing mounting methods, relationships of box and trim to surrounding construction, door hardware, cabinet type, trim style, and panel style.
2. Show location of knockouts for hose valves.

B. Shop Drawings: For fire protection cabinets. Include plans, elevations, sections, details, and attachments to other work.

C. Samples for Initial Selection: For each type of fire protection cabinet indicated.

D. Samples for Verification: For each type of exposed finish required, prepared on Samples of size indicated below:

1. Size: 6 by 6 inches (150 by 150 mm) square.

E. Product Schedule: For fire protection cabinets. Coordinate final fire protection cabinet schedule with fire extinguisher schedule to ensure proper fit and function.

NOT FOR BIDDING

1.4 CLOSEOUT SUBMITTALS

A. Maintenance Data: For fire protection cabinets to include in maintenance manuals.

1.5 QUALITY ASSURANCE

A. Fire-Rated, Fire Protection Cabinets: Listed and labeled to comply with requirements in ASTM E 814 for fire-resistance rating of walls where they are installed.

B. Electrical Components, Devices, and Accessories: Listed and labeled as defined in NFPA 70, by a qualified testing agency, and marked for intended location and application.

C. Preinstallation Conference: Conduct conference at Project site.

1. Review methods and procedures related to fire protection cabinets including, but not limited to, the following:

a. Schedules and coordination requirements.

1.6 COORDINATION

A. Coordinate size of fire protection cabinets to ensure that type and capacity of fire extinguishers indicated are accommodated.

B. Coordinate size of fire protection cabinets to ensure that type and capacity of fire hoses, hose valves, and hose racks indicated are accommodated.

C. Coordinate sizes and locations of fire protection cabinets with wall depths.

1.7 SEQUENCING

A. Apply vinyl lettering on field painted, fire protection cabinets after painting is complete.

PART 2 - PRODUCTS

2.1 MATERIALS

A. Cold-Rolled Steel Sheet: ASTM A 1008/A 1008M, Commercial Steel (CS), Type B.

B. Tempered Float Glass: ASTM C 1048, Kind FT, Condition A, Type I, Quality q3, 3 mm thick, Class 1 (clear).

2.2 FIRE PROTECTION CABINET FEC-1

A. Cabinet Type: Suitable for fire extinguisher.

NOT FOR BIDDING

1. Products: Subject to compliance with requirements, available products that may be incorporated into the Work include, but are not limited to, the following:

    a. Fire End & Croker Corporation.
    b. J. L. Industries, Inc., a division of Activar Construction Products Group.
    c. Kidde Residential and Commercial Division, Subsidiary of Kidde plc.
    d. Larsen's Manufacturing Company.
    e. Modern Metal Products, Division of Technico Inc..
    f. Moon-American.
    g. Potter Roemer LLC.
    h. Watrous Division, American Specialties, Inc..

B. Cabinet Construction: Nonrated.

C. Cabinet Material: Steel sheet.

1. Shelf: Same metal and finish as cabinet.

D. Semirecessed Cabinet: Cabinet box partially recessed in walls of sufficient depth to suit style of trim indicated; with one-piece combination trim and perimeter door frame overlapping surrounding wall surface with exposed trim face and wall return at outer edge (backbend). Provide where walls are of insufficient depth for recessed cabinets but are of sufficient depth to accommodate semirecessed cabinet installation.

1. Rolled-Edge Trim: 2-1/2-inch (64-mm) backbend depth.

E. Cabinet Trim Material: Steel sheet.

F. Door Material: Steel sheet.

G. Door Style: Vertical duo panel with frame.

H. Door Glazing: Tempered float glass (clear).

I. Door Hardware: Manufacturer's standard door-operating hardware of proper type for cabinet type, trim style, and door material and style indicated.

1. Provide projecting door pull and friction latch.
2. Provide continuous hinge, of same material and finish as trim, permitting door to open 180 degrees.

J. Accessories:

1. Mounting Bracket: Manufacturer's standard steel, designed to secure fire extinguisher to fire protection cabinet, of sizes required for types and capacities of fire extinguishers indicated, with plated or baked-enamel finish.
2. Break-Glass Strike: Manufacturer's standard metal strike, complete with chain and mounting clip, secured to cabinet.
3. Lettered Door Handle: One-piece, cast-iron door handle with the word "FIRE" embossed into face.

NOT FOR BIDDING

4. Identification: Lettering complying with authorities having jurisdiction for letter style, size, spacing, and location. Locate as directed by Architect.

   a. Identify fire extinguisher in fire protection cabinet with the words "FIRE EXTINGUISHER."

      1) Location: Applied to cabinet door.
      2) Application Process: Pressure-sensitive vinyl letters.
      3) Lettering Color: Red.
      4) Orientation: Vertical.

K. Finishes:

1. Manufacturer's standard baked-enamel paint for the following.

   a. Exterior of cabinet door, and trim except for those surfaces indicated to receive another finish.
   b. Interior of cabinet and door.

2. Steel: Powder coat.

   a. Color: As selected by the Architect from manufacturer's full range.

2.3 FABRICATION

A. Fire Protection Cabinets: Provide manufacturer's standard box (tub) with trim, frame, door, and hardware to suit cabinet type, trim style, and door style indicated.

1. Weld joints and grind smooth.
2. Provide factory-drilled mounting holes.
3. Prepare doors and frames to receive locks.
4. Install door locks at factory.

B. Cabinet Doors: Fabricate doors according to manufacturer's standards, from materials indicated and coordinated with cabinet types and trim styles selected.

1. Fabricate door frames with tubular stiles and rails and hollow-metal design, minimum 1/2 inch (13 mm) thick.
2. Fabricate door frames of one-piece construction with edges flanged.
3. Miter and weld perimeter door frames.

C. Cabinet Trim: Fabricate cabinet trim in one piece with corners mitered, welded, and ground smooth.

2.4 GENERAL FINISH REQUIREMENTS

A. Comply with NAAMM's "Metal Finishes Manual for Architectural and Metal Products" for recommendations for applying and designating finishes.

B. Protect mechanical finishes on exposed surfaces of fire protection cabinets from damage by applying a strippable, temporary protective covering before shipping.

NOT FOR BIDDING

C. Finish fire protection cabinets after assembly.

D. Appearance of Finished Work: Noticeable variations in same piece are not acceptable. Variations in appearance of adjoining components are acceptable if they are within the range of approved Samples and are assembled or installed to minimize contrast.

PART 3 - EXECUTION

3.1 EXAMINATION

A. Examine walls and partitions for suitable framing depth and blocking where semirecessed cabinets will be installed.

B. Proceed with installation only after unsatisfactory conditions have been corrected.

3.2 PREPARATION

A. Prepare recesses for semirecessed fire protection cabinets as required by type and size of cabinet and trim style.

3.3 INSTALLATION

A. General: Install fire protection cabinets in locations and at mounting heights indicated.

1. Fire Protection Cabinets: 54 inches (1372 mm) above finished floor to top of cabinet.

B. Fire Protection Cabinets: Fasten cabinets to structure, square and plumb.

1. Unless otherwise indicated, provide recessed fire protection cabinets. If wall thickness is not adequate for recessed cabinets, provide semirecessed fire protection cabinets.
2. Provide inside latch and lock for break-glass panels.
3. Fasten mounting brackets to inside surface of fire protection cabinets, square and plumb.

C. Identification: Apply vinyl lettering at locations indicated.

3.4 ADJUSTING AND CLEANING

A. Remove temporary protective coverings and strippable films, if any, as fire protection cabinets are installed unless otherwise indicated in manufacturer's written installation instructions.

B. Adjust fire protection cabinet doors to operate easily without binding. Verify that integral locking devices operate properly.

C. On completion of fire protection cabinet installation, clean interior and exterior surfaces as recommended by manufacturer.

NOT FOR BIDDING

D. Touch up marred finishes, or replace fire protection cabinets that cannot be restored to factory-finished appearance. Use only materials and procedures recommended or furnished by fire protection cabinet and mounting bracket manufacturers.

E. Replace fire protection cabinets that have been damaged or have deteriorated beyond successful repair by finish touchup or similar minor repair procedures.

END OF SECTION 104413

NOT FOR BIDDING

SECTION 104416 - FIRE EXTINGUISHERS

PART 1 - GENERAL

1.1 RELATED DOCUMENTS

A. Drawings and general provisions of the Contract, including General and Supplementary Conditions and Division 01 Specification Sections, apply to this section.

1.2 SUMMARY

A. Section includes portable, hand-carried fire extinguishers.

B. Related Sections:

1. Division 10 Section "Fire Extinguisher Cabinets."

1.3 ACTION SUBMITTALS

A. Product Data: For each type of product indicated. Include rating and classification, material descriptions, dimensions of individual components and profiles, and finishes for fire extinguisher and mounting brackets.

B. Product Schedule: For fire extinguishers. Coordinate final fire extinguisher schedule with fire protection cabinet schedule to ensure proper fit and function.

1.4 INFORMATIONAL SUBMITTALS

A. Warranty: Sample of special warranty.

1.5 CLOSEOUT SUBMITTALS

A. Operation and Maintenance Data: For fire extinguishers to include in maintenance manuals.

1.6 QUALITY ASSURANCE

A. NFPA Compliance: Fabricate and label fire extinguishers to comply with NFPA 10, "Portable Fire Extinguishers."

B. Fire Extinguishers: Listed and labeled for type, rating, and classification by an independent testing agency acceptable to authorities having jurisdiction.

1. Provide fire extinguishers approved, listed, and labeled by FMG.

NOT FOR BIDDING

C. Preinstallation Conference: Conduct conference at Project site.

1. Review methods and procedures related to fire extinguishers including, but not limited to, the following:

a. Schedules and coordination requirements.

1.7 COORDINATION

A. Coordinate type and capacity of fire extinguishers with fire protection cabinets to ensure fit and function.

1.8 WARRANTY

A. Special Warranty: Manufacturer's standard form in which manufacturer agrees to repair or replace fire extinguishers that fail in materials or workmanship within specified warranty period.

1. Failures include, but are not limited to, the following:

a. Failure of hydrostatic test according to NFPA 10.
b. Faulty operation of valves or release levers.

2. Warranty Period: Six years from date of Substantial Completion.

PART 2 - PRODUCTS

2.1 PORTABLE, HAND-CARRIED FIRE EXTINGUISHERS

A. Fire Extinguishers: Type, size, and capacity for each indicated.

1. Manufacturers: Subject to compliance with requirements, available manufacturers offering products that may be incorporated into the Work include, but are not limited to, the following:

a. Amerex Corporation.
b. Ansul Incorporated; Tyco International Ltd.
c. Badger Fire Protection; a Kidde company.
d. Buckeye Fire Equipment Company.
e. Fire End & Croker Corporation.
f. J. L. Industries, Inc.; a division of Activar Construction Products Group.
g. Kidde Residential and Commercial Division; Subsidiary of Kidde plc.
h. Larsen's Manufacturing Company.
i. Moon-American.
j. Pem All Fire Extinguisher Corp.; a division of PEM Systems, Inc.
k. Potter Roemer LLC.
l. Pyro-Chem; Tyco Safety Products.

NOT FOR BIDDING

2. Valves: Manufacturer's standard.
3. Handles and Levers: Manufacturer's standard.
4. Instruction Labels: Include pictorial marking system complying with NFPA 10, Appendix B and bar coding for documenting fire extinguisher location, inspections, maintenance, and recharging.

B. Multipurpose Dry-Chemical Type in Steel Container FE-1: UL-rated 4-A:60-B:C, 10-lb (4.5-kg) nominal capacity, with monoammonium phosphate-based dry chemical in enameled-steel container.

C. Purple-K Dry-Chemical Type in Aluminum Container EF-2: UL-rated 120-B:C, 20-lb (9.1-kg) nominal capacity, with potassium bicarbonate-based dry chemical in enameled-aluminum container.

2.2 MOUNTING BRACKETS

A. Mounting Brackets: Manufacturer's standard steel, designed to secure fire extinguisher to wall or structure, of sizes required for types and capacities of fire extinguishers indicated, with plated or red baked-enamel finish.

1. Manufacturers: Subject to compliance with requirements, available manufacturers offering products that may be incorporated into the Work include, but are not limited to, the following:

a. Amerex Corporation.
b. Ansul Incorporated; Tyco International Ltd.
c. Badger Fire Protection; a Kidde company.
d. Buckeye Fire Equipment Company.
e. Fire End & Croker Corporation.
f. J. L. Industries, Inc.; a division of Activar Construction Products Group.
g. Larsen's Manufacturing Company.
h. Potter Roemer LLC.

B. Identification: Lettering complying with authorities having jurisdiction for letter style, size, spacing, and location. Locations indicated by Architect.

1. Identify bracket-mounted fire extinguishers with the words "FIRE EXTINGUISHER" in red letters decals applied to mounting surface.

a. Orientation: Vertical.

PART 3 - EXECUTION

3.1 EXAMINATION

A. Examine fire extinguishers for proper charging and tagging.

1. Remove and replace damaged, defective, or undercharged fire extinguishers.

NOT FOR BIDDING

B. Proceed with installation only after unsatisfactory conditions have been corrected.

3.2 INSTALLATION

A. General: Install fire extinguishers and mounting brackets in locations indicated and in compliance with requirements of authorities having jurisdiction.

1. Mounting Brackets: 54 inches (1372 mm) above finished floor to top of fire extinguisher.

B. Mounting Brackets: Fasten mounting brackets to surfaces, square and plumb, at locations indicated.

END OF SECTION 104416

NOT FOR BIDDING

SECTION 114000 – FOODSERVICE EQUIPMENT

PART 1 - GENERAL

1.1 DESCRIPTION

A. Scope: Furnish all labor, materials, services, equipment and appliances required to provide and deliver all foodservice equipment hereinafter specified into the building, uncrate, assemble, hang, set-in-place, level, and completely install, exclusive of final utility connections.

B. Related Work Specified Elsewhere:

1. All plumbing, electrical and ventilating work required in conjunction with commercial foodservice equipment including rough-in to points indicated on mechanical drawings, and final connections from rough-in points. Electrical service to points of connection and final connections shall be by Divisions 22, 23 and 26.
2. Refrigeration work will be done by the Kitchen Equipment Contractor except for electrical connections to and between compressors, blower coils, controls, etc. These final connections shall be by Divisions 23 and 26.
3. All traps, steam traps, grease traps, line strainers, tail pieces, valves, stops, shut-offs, and fittings necessary for equipment specified will be furnished and installed under mechanical contract by Division 22 unless specifically called for otherwise under each item.
4. All line and disconnect switches, safety cut-offs and fittings, convenience boxes or other electrical controls, fittings and connections will be furnished and installed under electrical contract by Division 26, unless specifically indicated otherwise in the item specifications. Starting switches for certain specified pieces of foodservice equipment are to be provided by Kitchen Equipment Contractor. Those starting switches, if furnished loose as standard by Foodservice Manufacturers (other than fabricated items), shall be mounted and wired complete under Division 26.
5. Any sleeves or conduit required for refrigeration, syrup tubing, or carbonation tubing will be furnished and installed under Division 22.
6. Unless specifically called for in the Item Specifications, ventilating fans and all duct work between same and ceiling rough-in openings, and from same to discharge opening in building will be furnished and installed by Division 22.

1.2 DEFINITIONS

A. All references to the terms "Contractor", "Kitchen Equipment Contractor", or "K.E.C." in the specifications and/or on the drawings shall be defined to mean the Kitchen Equipment Contractor.

B. All references to the term "Owner" in the specifications and/or on the drawings shall be defined to mean the Owner or Owner's designated representative and the Foodservice Equipment Consultant.

NOT FOR BIDDING

C. All references to the term "Consultant" or "Foodservice Equipment Consultant" in the specifications and/or on the drawings shall be defined to mean **NYIKOS ASSOCIATES, INC.** its employees, and authorized representatives and is referred to throughout the contract documents as if singular in number and masculine in gender.

D. The phrase "The K.E.C. shall" or "by the K.E.C.", as applicable, is understood to be included as a part of each sentence, paragraph or article of these specifications unless otherwise indicated or specified.

1.3 QUALITY ASSURANCE

A. Qualification of Suppliers:

1. Commercial foodservice equipment suppliers shall submit satisfactory evidence of compliance with the following qualifications and conditions to be approved.

   a. Successful completion of jobs of comparable scope.
   b. Have manufacturer's authorization to distribute and install specified factory items of equipment.
   c. Maintain a permanent staff experienced in the installation of foodservice equipment and preparation of professional style rough-in drawings and brochures.
   d. Maintain or have access to fabrication shop meeting N.S.F. requirements. If other than foodservice equipment supplier's own fabrication shop, obtain Consultant approval of fabrication shop desired to be used.
   e. Maintain or have access to a readily available stock of repair and replacement parts, together with authorized service personnel.

B. Qualification of Fabricators:

1. Fabricators shall be an N.S.F. approved organization with trained personnel and facilities to properly design, detail and fabricate equipment in accordance with the specifications and standard details contained herein.
2. Custom fabricated equipment shall bear the National Sanitation Foundation seal of approval and listed as such under N.S.F. Standards No. 2 and No. 33.
3. Only one (1) fabricator shall be used for this project, and all equipment will be fabricated at the same shop. Where units cannot be fully shop-fabricated, complete fabrication at project site.
4. Acceptable fabricators are:

   a. Pro Stainless, Inc.; Keyser, WV
   b. Commercial Stainless, Inc.; Bloomsburg, PA
   c. Keystone Custom Fabricators, Inc.; Elizabeth, PA
   d. Eagle Spec Fab; Clayton, DE
   e. Low Temp Industries, Inc.; Jonesboro, GA
   Other fabricators, as approved by Consultant.

C. Qualification of Manufacturers:

NOT FOR BIDDING

1. Manufacturers shall be regularly engaged in the production of items furnished and shall have demonstrated the capability to furnish similar equipment that performs the functions specified or indicated herein.

D. Standard Products:

1. Materials, products, and equipment furnished under this contract shall be the standard items of manufacturers regularly engaged in the production of such materials, products, and equipment and shall be of the manufacturer's latest design that complies with the specifications which have been produced and used successfully on other projects and in similar applications.
2. Discrepancies within contract documents should immediately be brought to the attention of the Consultant in writing for clarification prior to fabrication or ordering of standard items.

1.4 PLANS & SPECIFICATIONS

A. Specifications and drawings have been prepared to form the basis for procurement, erection, start-up and adjustment of all equipment in this contract. Plans and specifications shall be considered as mutually explanatory and work required by one, but not the other, shall be performed as though required by both. Items required by one, but not by the other shall be provided as though required by both. Work shall be accomplished as called for in specifications and shown on drawings, so that all items of equipment shall be completely functional for purpose for which they were designed. When there is any discrepancy between drawings and specifications, drawings shall govern. Bidders should seek clarification of any discrepancies from the Consultant prior to bidding.

1.5 SUBMITTALS

A. General Requirements:

1. Within six (6) weeks or earlier, as required, assemble and submit all shop drawings, rough-in drawings, brochures, color samples, etc. as a complete package. There will be no review of partial submittals.
2. Any and all costs, to all trades and parties involved, arising from delay of project due to non-submittal of the complete package by the K.E.C. within a reasonable time period shall be borne solely by the K.E.C.
3. Identify each submittal by project name, date, contractor, submittal name, and any other necessary information to distinguish it from other submittals.

B. Shop Drawings:

1. Submit electronic copy of shop drawings on sheets equal in size to Contract Documents or equipment specified for custom fabrication including all accessories attached to each item.
2. Drawings shall be detailed and fully dimensioned to a minimum scale of 3/4"=1'-0" for plan and elevation views, and 1-1/2"=1'-0" for sections, based on the floor plan(s) and following item specifications. Drawings will be checked for thoroughness, accuracy, completeness, neatness, and returned for corrections, if necessary.

NOT FOR BIDDING

C. Rough-in Drawings:

1. Submit electronic copy of rough-in drawings on sheets equal in size to Contract Documents of detailed arrangement plans professionally prepared from architects dimensioned plans (not traced from Contract Documents) at a minimum scale of 1/4"=1'-0".
2. Equipment Layout Plan showing arrangement of all items specified and identified on schedule of equipment listing item number, description, quantity, manufacturer, model number, and remarks.
3. Ventilation Plan showing dimensioned locations of all duct openings for ventilators and dishmachines identifying size, c.f.m. required (exhaust and supply), static pressures, and connection heights.
4. Plumbing/Electrical Plans showing dimensioned locations, sizes, elevations and capacities of all utility services required for each item of equipment in relation to finished walls, columns, and heights above finished floor.
5. Special Conditions Plan showing exact dimensions and details of all masonry bases, floor depressions, critical partition locations/heights, wall openings, reinforcing for wall and/or ceiling mounted equipment, and conduit locations for soda and compressed gas lines.

D. Equipment Brochures:

1. Submit electronic copy of manufacturer's illustrations and technical data for approval prior to procurement. All items of Standard Manufacture shall be submitted, including items purchased to be built into fabricated equipment. Each illustration shall be marked to accurately describe the item to be furnished as specified. Include all deviations from standard information (i.e., voltage, phase, load, etc.).
2. Include a separate information sheet ahead of each illustration sheet showing all service connection sizes, electrical requirements, loads, consumptions, and all accessories specified.
3. Manufacturer's suggested schematic drawings for connection of mechanical and electrical services for such items as booster heaters, disposers, or any other item of equipment that may require the same.

E. Miscellaneous Shop Drawings:

1. Submit electronic copy of manufactured equipment specified requiring clarification and approval such as, walk-in cooler/freezer drawings, ventilator drawings, utility raceway drawings, and refrigeration system drawings.

F. Operation and Maintenance Manuals:

1. Submit electronic copy for all mechanically operated equipment of standard manufacture. Include operating and cleaning/maintenance instructions, parts listing, recommended parts inventory listing and purchase source, copy of warranties, and similar applicable information.
2. Brochure covers shall bear the job name, date, and name of contractor.

G. Manufacturer's List:

1. The K.E.C. shall submit in writing a list of all manufacturer's representatives of the food service equipment such as convection ovens, ranges, etc., and their authorized service

NOT FOR BIDDING

agencies' addresses and telephone numbers; to be presented after submission of manufacture data.

H. Samples:

1. Samples of materials, products, and fabrication methods, shall be submitted for approval upon request at no additional cost, before proceeding with work.

I. Re-submission Requirements:

1. Shop Drawings:

a. Revise initial drawings as required and resubmit in accordance with submittal procedures.
b. Indicate on drawings all changes which have been made in addition to those requested by Consultant.

2. Product Data and Samples:

a. Submit new data and samples as required for initial submittal.
b. Make all re-submittals within fourteen (14) working days from date of Consultants previous action.

J. Approvals:

1. After approval of the submittals listed above, furnish as many prints and copies as are required for the various trades, the Owner, the Architect, and the Consultant.
2. The approval of the shop drawings will be general and shall not relieve the K.E.C. of responsibility for proper fitting, finishing, quantities, and erection of work in strict accordance with the contract requirements, nor does it relieve him of the responsibility of furnishing material and workmanship not indicated on approved shop drawings but required for the completion of his work.
3. Approval by the Consultant and/or Owner of the manufacturer's data submitted by the K.E.C. does not waive the responsibility of K.E.C. to furnish each item of equipment in complete compliance with the specifications and drawings. Discrepancies between Contract Documents and furnished equipment shall be corrected even after approval and installation of this equipment at no additional cost to the Owner.

1.6 PRODUCT DELIVERY, STORAGE AND HANDLING

A. Delivery:

1. Equipment shall be delivered to the job site only after the building is weather-safe and vandal-safe.

B. Storage:

1. Store equipment in an area convenient to the point of installation in such a way that it can be protected from the weather and job hazards.

NOT FOR BIDDING

C. Protection:

1. Wrapping and protective coatings shall remain on all items until ready for use and in the case of stainless steel items, until installation is complete and the job is ready for cleaning.
2. Existing equipment not scheduled for removal but to remain within the construction area shall be wrapped with protective plastic and/or padding to prevent damage and shall remain on all items until installation is complete and the job is ready for cleaning.

D. Damage:

1. All responsibility shall rest with the K.E.C. for any damage or loss incurred prior to final acceptance. Such items as may be lost or damaged shall immediately be replaced or repaired to a new condition to the complete satisfaction of and at no additional cost to the Owner.

1.7 JURISDICTION TRADE AGREEMENTS AND RESTRICTIONS

A. Include the work specified, shown or reasonably inferable as part of foodservice equipment. Portions of this work may be subcontracted to those qualified to do such work, as may be necessary because of jurisdictional trade agreements and restrictions.

1.8 REGULATIONS AND CODES

A. Except as otherwise indicated, each item of equipment shall comply with the latest current edition of the following standards as applicable to the manufacture, fabrication, and installation of the work in this section.

1. N.S.F. Standards: Comply with National Sanitation Foundation Standards and criteria, and provide N.S.F. "Seal of Approval" on each manufactured item and major items of custom-fabricated work.
2. U.L. Standards: For electrical components and assemblies, provide either U.L. labeled products or, where no labeling service is available, provide a complete index of the components used as selected from the U.L. "Recognized Component Index".
3. A.N.S.I. Standards: For gas-burning equipment, comply with A.N.S.I. Z21-Series standards. Comply with A.N.S.I. B57.1 for compressed gas cylinder connections and with applicable standards of the Compressed Gas Association for water connection air gaps and vacuum breakers.
4. A.G.A.: All gas-fired equipment shall be A.G.A. Approved, equipped to operate on the type gas available at the job site and shall contain 100% automatic safety shut-off devices.
5. N.F.P.A. Standards: Comply with N.F.P.A. Bulletin 96 for exhaust systems and with N.F.P.A. Bulletins 17, 17A & 96 and U.L. 300 for fire extinguishing systems.
6. A.S.M.E. Code: Comply with A.S.M.E. boiler code requirements for steam generating and steam heated equipment. Provide A.S.M.E. inspection, stamps, and certification of registration with National Board.
7. National Electric Code: Comply with N.E.C. Volume 5 for electrical wiring and devices included with foodservice equipment.
8. All authorities having jurisdiction over this type of equipment and/or installation.

NOT FOR BIDDING

9. Where specifications and/or drawings require mechanical, electrical or refrigeration work to be performed, such work shall be done in strict conformance to other portions of the Base Building Specification which sets forth standards for this type of work.
10. Where there exists two standards or codes for one type of work, the stricter method shall govern.

1.9 WARRANTIES

A. Warrantee in writing all equipment and fabrication against defects and workmanship for a period of two (2) years from date of acceptance.

1. Each piece of mechanical equipment shall be listed, together with the authorized service and repair agency whom the Owner will call should malfunctions occur within the two-year (2) guarantee period.

B. Refrigeration system compressors shall be warranted for five (5) years by the manufacturer. Free refrigeration service, including parts and labor, shall be furnished for two (2) years from date of acceptance.

1.10 JOB CONDITIONS

A. Visit the job site to field check actual wall dimensions and roughing-in and shall be responsible for fabricating and installing the equipment in accordance with the available space and utility services as they exist on the job site.

B. Check all door openings, passageways, elevators, etc., to be sure that the equipment can be conveyed to its proper location within the building and if necessary, check the possibility of holding wall erection, placement of doorjambs, windows, etc. for the purpose of moving the equipment to its proper location with the Contractor. Any removal and rebuilding of walls, partitions, doorjambs, etc. necessary to place the equipment, or if caused by incorrect information on the Contractor's drawings, shall be done at the expense of the K.E.C., at no additional cost to the Owner.

C. Notify the Consultant and Owner before fabrication of equipment of any discrepancies between plans and specifications and actual conditions on the job.

D. Before finished floors, walls, and/or ceilings are in place, physically check the location of all "rough-ins" at the job site. Report discrepancies in writing.

E. Any changes required after fabrication has been started to ensure equipment accurately fitting the space as it exists and conforming to actual field dimensions on the job shall be made at no additional cost to the Owner.

F. If special hoisting equipment and operators are required, include such cost as part of the bid for this work.

NOT FOR BIDDING

1.11 EXISTING EQUIPMENT

A. Cleaning and Repair

1. The Equipment Contractor shall clean listed existing items and replace any defective parts.
2. Cleaning shall consist of the removal of residues of food, ingredients, dirt and all other soiling materials and extraneous matter.
3. Repairs and parts shall be for minor items such as: control knobs, pilot lamps, faucet washers, minor adjustments, etc.
4. Major repairs or parts required, which are only detectable during repairs, shall be noted in writing, with cost, to Owner for approval and additional to the contract price.

B. Storage and Protection

1. Coordinate a suitable location within the building to store all existing equipment. Otherwise, provide secured on-site storage in the form of a trailer or shed.
2. Should on-site storage not be available, transport equipment to supplier's warehouse.
3. K.E.C. shall be responsible for protection from theft and damage of all existing equipment scheduled for re-use.

1.12 CHANGES IN THE WORK

A. The Owner reserves the right to require reasonable modification to be made in the routing of work and relocation of equipment. This specifically refers to conditions where interference occurs or where more desirable accessibility can be obtained or whose materials cannot be installed because of structural or mechanical conditions encountered. Such changes shall be made at no additional cost to the Owner.

1.13 PATENTS

A. Hold harmless and save the Owner and its officers, consultants, servants and employees from liability of any nature or kind, including costs and expenses for or on account of any copyrighted, patented, or unpatented invention, process, trademark, design, device, material, article, or appliance manufactured or used in the performance of the contract, including its use by the Owner, unless otherwise specifically stipulated in the Contract Documents.

B. If the Contractor has information that the process or article specified is an infringement of a patent, he shall be responsible for such loss unless he promptly gives such information to the Owner in writing. The contract price shall include all royalties or costs arising from the use of any or all of the above which are, in any way, involved in the contract.

1.14 CONTRACTOR'S WARRANTY

A. The Contractor represents and warrants:

NOT FOR BIDDING

1. That he is financially solvent and that he is experienced in and competent to perform the types of work or to furnish the plans, materials, supplies or equipment, to be so performed or furnished by him.
2. That he is familiar with all Federal, State, municipal, and department laws, ordinances, orders, and regulations, which may, in any way, affect the work of those employed therein, including, but not limited to, any special acts relating to the work or to the project of which it is a part.
3. That such temporary and permanent work required by the contract as is to be done by him can be satisfactorily constructed and used for the purpose for which it is intended and that such construction will not injure any person or damage any property.
4. That he has carefully examined the plans, specifications, addenda, if any, and the site of the work and that, from his own investigations, he has satisfied himself as to the nature and location of the work, the character, quality, and quantity of materials likely to be encountered, the character of equipment and other facilities needed for the performance of the work, the general and local conditions, and all other materials which may, in any way, affect the work or its performance.
5. That he has satisfied himself as to the existing openings and accesses to the foodservice area through which his equipment shall be required to pass and that he is responsible for his equipment being delivered in as many sections as necessary to conform to the available space dictated by these existing limitations.

1.15 SUBSTITUTIONS

A. Bids submitted shall be for the specific manufacturer and model, size, capacity, and accessories, as specified or shown on the drawings.

B. The K.E.C. may quote upon brands and models of equipment other than those specified as a substitute. In the event that it is desired to request approval of substitute material, product, article, process, or item of equipment in lieu of that which is specified, submit a written request at least (10) working days prior to date of bids, setting forth the proposed substitution in detail, including an itemized analysis of the addition or deduction in the amount of the contract, if any, which will result if the substitution is approved. Each such request shall include a complete description of the proposed substitute, the name of the material or equipment for which it is to be substituted, drawings, cuts, performance and test data and any other data or information necessary for a complete evaluation. If approved, bidders will be notified in the form of addendum.

C. The Contractor shall be held responsible for additional costs to himself or any other prime contractor for changes required to install materials, devices, equipment, etc., which the Contractor has substituted for that specified.

D. The Owner reserves the right to award a contract or contracts based upon the inclusion or exclusion of one or more of the alternate estimates. The description of all workmanship and materials under the various headings of the specifications shall have the same meaning and force when applied to similar workmanship and materials in the alternate. If the descriptions are not specific, the workmanship shall be the best quality and the materials the best commercial grade.

E. Whenever any product is specified in the Contract Documents by reference to the name, trade name, make, or catalog number of any manufacturer or supplier, the intent is not to limit

NOT FOR BIDDING

competition but to establish a standard of quality which is necessary for the project. Products of other manufacturers meeting the established criteria will be considered. However, please take note that the plumbing, electrical, steam, heating, ventilating, and air-conditioning drawings prepared by the consulting engineers, have been engineered based on the first product named under each item number designation. Therefore, any other product which is submitted for approval in lieu of the primary item specified, shall conform to the rough-in requirements established for the first product named, as well as physical size and building construction requirements.

F. Any equipment listed which is not in accordance with the provisions of these specifications will be rejected. If the Contractor fails to submit for approval within the specified time the list of equipment as required herein, the Consultant shall then have the right to make the final equipment selection. The selection made by the Consultant shall strictly conform to these specifications and will be final and binding, and the item shall be furnished and installed by the Contractor without change in the contract price at the time of completion.

G. It shall be the responsibility of the K.E.C. to prove that substitutions are equal to specified items. **NYIKOS ASSOCIATES, INC**. as the Owner's representative, shall be the determining authority as to the acceptability or equality of the substitutions. <u>No substitutions shall be approved after bids are received.</u>

1.16 DESIGN/MODEL CHANGE, DISCONTINUED ITEMS

A. All equipment specified shall be of latest design. Any improvements made in design and construction of prefabricated items before equipment is actually delivered to the project site, shall be incorporated in equipment at no additional cost, provided such incorporation does not delay delivery date of equipment.

B. In the event of an item being discontinued after specified and prior to delivery to project site, the K.E.C. shall be responsible for notifying the Consultant in writing of the discontinued item and request an alternate of equal performance, including all accessories, at no additional cost to the Owner.

PART 2 - PRODUCTS

2.1 GENERAL

A. The equipment and its component parts shall be new and unused. All items of standard manufactured equipment shall be current models at the time of delivery. All parts subject to wear, breakage, or distortion shall be accessible for adjustment, replacement, and repair.

B. Means shall be provided to ensure adequate lubrication for all moving parts. All oil holes, grease fittings, and filler caps shall be accessible without the use of tools.

C. The design of the equipment shall be such as to provide for safe and convenient operation. Covers or other safety devices shall be provided for all items of equipment presenting safety hazards. Such guards or safety devices shall not present substantial interference to the operation of the equipment. All guards shall provide easy access to the guarded parts.

NOT FOR BIDDING

D. Trim shall not be an acceptable substitute for accuracy and neatness. When trim is required and accepted by the Consultant and the Owner in lieu of rejection of items of equipment, it shall be the K.E.C.'s responsibility to provide same at no additional cost.

E. Unless otherwise specified herein, no material lighter than #20 gauge shall be incorporated into the work. All gauges for sheet iron and sheet steel shall be U.S. Standard Gauges, and finished equipment gauge thickness shall not vary more than 5% plus or minus from the thickness indicated below.

GAUGE	THICKNESS	GAUGE	THICKNESS
#10	0.1406	#16	0.0625
#12	0.1094	#18	0.0500
#14	0.0781	#20	0.0375

F. Materials or work described in words which have a well-known and acceptable trade meaning shall be held to refer to such accepted meanings.

2.2 MATERIALS

A. Refrigeration Systems:

1. Self-contained:

   a. Whether the units be top-mounted or cabinet-mounted, they shall be started by the K.E.C. and shall be tested for maintenance of temperature.
   b. All units shall be furnished with condensate evaporators.

2. Remote: Provide and install complete refrigeration system(s), charged, started, and operating properly, according to the Item Specifications and the following.

   a. Single stage compressors with air-cooled condensers operating within the recommended range of suction discharge pressure of economical operation and within the required capacity.
   b. All units shall be new and factory assembled, to operate with the refrigerant specified. Refrigerant R-404A shall be used for all medium and low temperature applications. Due to the unsettled nature of refrigerants, no refrigerant shall be used with a phase-out date of less than ten (10) years from the date of installation.
   c. Compressors shall be accessible hermetic type, Copeland or approved equal, and shall be equipped with high-low pressure control, liquid line drier, sight glass, suction and discharge vibration eliminator, and head pressure control.
   d. The system shall have a factory mounted and pre-wired control panel complete with main fused disconnect, compressor circuit breakers, contactors, and time clocks wired for single point power connection.
   e. The supporting frame shall be constructed of structural steel, fully welded, and protected against rust and corrosion with one (1) coat primer, and two (2) coats paint, unless otherwise specified.
   f. Systems specified for outdoor installation shall be fully protected in a weather-proofed housing with louvered front panel and hinged top, constructed to resist rust and corrosion, and furnished with low ambient controls. Crankcase heater shall be provided with every compressor.

NOT FOR BIDDING

3. Where specifications call for pre-piped lines (i.e., from a fixture to a valve compartment, etc.), provide such work in strict conformance with other sections of the specifications which set forth standards for this type of work or in conformity with the requirements of the Board of Fire Underwriters or ASHRAE Standards, whichever is greater.

4. Each refrigeration item specification is written to provide minimum specifications and scope of work. All refrigeration equipment shall be designed and installed to maintain the following general temperatures unless otherwise specified.

TYPE		REFRIGERATORS	FREEZERS
a.	Walk-In	+35º F./1.7º C.	-10º F./-23.3º C.
b.	Reach-In	+35º F./1.7º C.	-10º F./-23.3º C.
c.	Undercounter	+35º F./1.7º C.	-10º F./-23.3º C.
d.	Fabricated	+35º F./1.7º C.	-10º F./-23.3º C.
e.	Cold Pans	+0º F./-17.8º C.	
f.	Work Rooms	+50º F./10º C.	

5. Provide (including payment if subcontracted) all electrical and refrigeration components needed by the completed system and complete (or have completed by the respective trades) all connections of and to said components.
6. An evaporator coil defrost system shall be provided and installed by the K.E.C. on all refrigeration systems designed to operate at an evaporator coil temperature of less than +35º F. Evaporator coil units provided without electric defrost feature shall be installed with a solenoid valve in the liquid line, controlled by the time clock so as to shut off the flow of refrigerant and allow the compressor to pump down and shut off by activation of the pressure control switch.
7. Verify the requirements of and provide any or all additional refrigeration specialty(s) or component(s) required or recommended by the manufacturer for proper operation under the specific operating conditions and location of each system specified.
8. Verify and provide manufacturer's certification that the equipment selection hereinafter specified for each refrigeration system is properly sized and shall meet the operating requirements set forth for each system regarding maintaining specified operating temperature, hours of compressor running time, and system pressures and velocities as recommended by the equipment manufacturer(s).
9. All refrigeration systems shall be installed and wired in strict conformance with the manufacturer's instructions and recommendations.

B. Motors and Heating Elements:

1. Motors up to and including 1/2 HP shall be wired for 120 volt, single phase service. Motors larger than 1/2 HP shall be wired for 208 volt, single or three phase service as indicated. Motors shall be of the drip-proof, splash-proof, or totally enclosed type, having a continuous duty cycle and ball bearings, except small timing motors which may have sleeve bearings. All motors shall have windings impregnated to resist moisture. Motors located where subject to deposits of dust, lint, or other similar matter shall be of the totally enclosed type. Motors shall have ample power to operate the machines for which designated under full load operating conditions without exceeding their nameplate ratings. Insulation shall be N.E.M.A. Class B or better.
2. Heating elements having a connected load up to and including 1,000 watts shall be wired for 120 or 208 volt, single phase service, or as indicated on the drawings.

NOT FOR BIDDING

a. Any heating element larger than 1,000 watts or any combination of elements in one fixture totaling more than 1,000 watts shall be wired for 208 volt single or three phase service, as indicated on the drawings.
b. Fixtures having multiple heating elements may be wired for three phase service with the load balanced as equally as possible within the fixture.

C. Switches and Controls:

1. Provide recognized commercial grade signals, "on-off" push buttons or switches, and other speed and temperature controls as required for operation of each item, complete with pilot lights and permanent graphics, conspicuously labeled, to assist the user of each item.
2. Mount switches and controls directly adjacent the piece of equipment for which it involves, on operator's side of counter body apron out of view to the public.
3. Provide on or for each motor-driven appliance or electrical heating or control unit, a suitable control switch or starter of the proper type and rating and in accordance with Underwriter's Code wherever such equipment is not built in. All other line switches, safety cut-outs, control panels, fuse boxes, other control fittings and connections, when not an integral part of the unit or furnished loose by the manufacturer will be furnished and installed by the Electrical Contractor, unless otherwise specified. All electrical controls, switches, or devices provided loose for field installation as a part of the item specified shall be installed in the field by the Contractor unless otherwise specified.
4. Appliances shall be furnished complete with motors, driving mechanisms, starters, and controllers, including master switches, timers, cut-outs, reversing mechanisms, and other electrical equipment if and as applicable.

D. Cover Plates:

1. All controls mounted on vertical surfaces of fixtures shall be set into recessed die stamped stainless steel caps, or mounted onto removable cover plates in such a fashion as to not protrude or interfere with the operation of each item.
2. Cover plates shall be furnished and installed for all electrical outlets, receptacles, switches and controls furnished by the K.E.C., and shall match the material and finish of the equipment to which they will be fastened.

E. Wiring and Conduit:

1. Wiring shall be properly protected in N.E.M.A. and U.L. approved metal enclosures. Only rigid steel conduit shall be used, zinc coated where unexposed and <u>chrome plated where exposed</u>. All wiring shall be run concealed wherever possible.
2. All equipment furnished under this contract shall be so wired, wound, or constructed so as to conform with the electrical characteristics at the job site.
3. Wiring and connection diagrams shall be furnished with electrically operated machines and for all electrically wired fabricated equipment.
4. Furnish all foodservice equipment completely wired internally using wire and conduit suitable for a wet location. Where an Electrician's services are required, the work shall be done in the K.E.C.'s factory or at his expense at the job site at no additional cost to the Owner. Provide all electrical outlets and receptacles required to be mounted on or in fabricated equipment and interconnect to a master circuit breaker panel with all wires neatly tagged showing item number, voltage characteristics, and load information. Final connection shall be made by the Electrical Contractor.

NOT FOR BIDDING

F. Cords, Plugs, and Receptacles:

1. The Electrical Contractor shall provide three- or four-wire, grounding-type receptacles for all wall and floor mounted outlets to be used for plug-in equipment with characteristics as noted on the drawings. Provide Hubbell three-wire or four-wire grounding-type connectors and neoprene cords installed on each item of plug-in equipment, as indicated on drawings and item specifications.
2. K.E.C. shall coordinate with the Electrical Contractor so that the receptacles provided will match the specific plugs provided as part of the plug-in equipment. Any changes in cords and plugs required in the field due to lack of coordination between the Electrical Contractor and the K.E.C. shall be the latter's responsibility.
3. Reduce the length of all cords furnished with the specified equipment to a suitable or appropriate length so they do not interfere with other equipment or operations.
4. Pedestal receptacles that are part of fabricated equipment exposed to view, shall be similar to T&S Model #B-1508DD single face, single gang or Model #B-1528DD single face, double gang.

G. Water Inlets:

1. Water inlets shall be located above the positive water level wherever possible to prevent siphoning of liquids into the water supply system. Wherever conditions shall require a submerged inlet, a suitable type of check valve (except in jurisdictions where check valves are prohibited) and vacuum breaker shall be placed on the fixture to form a part of same to prevent siphoning. Where exposed to view, piping and fittings shall be <u>chrome-plated.</u>

H. Drain Lines:

1. Plumbing Contractor shall provide and install indirect waste lines from equipment which will discharge into floor drains or safe wastes in accordance with Plumbing Rough-In Plans, <u>chrome-plated where exposed</u>. Extend to a point at least 1" (or as required by local codes) above the rim of the floor drain, cut bottom on 45º angle and secure in position.
2. All horizontal piping lines shall be run at the highest possible elevation and not less than 6" above finished floor through equipment where possible.
3. No exposed piping in or around fixtures or in other conspicuous places shall show tool marks of more than one thread at the fitting.
4. All steam operating valves on or in fabricated and purchased foodservice equipment shall be provided with composition hand wheels, which shall remain reasonably cool in service.
5. Provide suitable pressure regulating valves for all equipment with such components that might reasonably be expected to be affected over a period of time by adverse pressure conditions.

I. Faucets, Valves and Fittings:

1. All sinks shall be fitted with chromium plated, swing spout faucets of same manufacturer throughout as follows, or otherwise specified in Item Specifications.

   a. Prep and Utility Sinks:
      1.) Splash-Mounted:
         a.) T&S Brass and Bronze Works, Inc., Model #B-231.

NOT FOR BIDDING

b.) Fisher Manufacturing Company, Model #3253.

2.) Deck-Mounted:

a.) T&S Brass and Bronze Works, Inc., Model #B-221.

b.) Fisher Manufacturing Company, Model #3313.

b. Pot Sinks:

1.) Splash-Mounted:

a.) T&S Brass and Bronze Works, Inc., Model #B-290.

b.) Fisher Manufacturing Company, Model #3314.

2. Pre-Rinse Assemblies:

a. Splash-Mounted:

1.) T&S Brass and Bronze Works, Inc., Model #B-133 with #B-109 wall bracket.

2.) Fisher Manufacturing Company, Model #2210 with #2902-12 wall bracket.

b. Deck-Mounted:

1.) T&S Brass and Bronze Works, Inc., Model #B-143 with #B-510 mixing valve and #B-109 wall bracket.

2.) Fisher Manufacturing Company, Model #2810 with #2805-CV mixing valve and #2902-12 wall bracket.

3. Vacuum Breakers:

a. General Use:

1.) Fisher Manufacturing Company, Model #3990-8000.

b. Disposers:

1.) Splash-Mounted:

a.) T&S Brass and Bronze Works, Inc., Model #B-455.

b.) Fisher Manufacturing Company, Model #3990.

2.) Deck-Mounted:

a.) T&S Brass and Bronze Works, Inc., Model #B-456.

b.) Fisher Manufacturing Company, Model #3991.

4. Trough Inlets:

a. Fisher Manufacturing Company, Model No. #2905.

5. Other specialty faucets, pre-rinse assemblies, vacuum breakers, and trough inlets, as specified under Item Specifications.

6. All sink compartments shall be fitted with 2" NPT male, chrome-plated, brass rotary waste valves complete with overflow assemblies and stainless steel strainers.

a. Prep and General Utility Sinks:

1.) Fisher Manufacturing Company, Model #6100.

b. Pot Sinks:

1.) Fisher Manufacturing Company, Model #6102.

NOT FOR BIDDING

7. Refer to Division 22 for all other fittings.

J. Metals and Alloys:

1. Stainless steel sheets shall conform to ASTM 240, Type 302, Condition A, 18-8, of U.S. Standard Gauges as previously indicated under paragraph 2.1.F.

   a. All exposed surfaces shall have a No. 4 finish. A No. 2B finish shall be acceptable on surfaces of equipment not exposed to view.
   b. All sheets shall be uniform throughout in color, finish, and appearance.
   c. Rolled shapes shall be of cold rolled type conforming to ASTM A36.

2. Stainless steel tubing and pipe shall be Type 304, 18-8, having a No. 4 finish, and shall conform to either ASTM A213 if seamless or ASTM A249 if welded.
3. Where galvanized metal is specified, it shall be copper-bearing galvanized iron, cold-rolled, stretcher leveled, bonderized, re-rolled to insure a smooth surface, and used in the largest possible sizes with as few joints as necessary.
4. Galvanizing shall be applied to rolled shapes in conformance with ASTM A123, and to sheets in conformance with ASTM A526, coating designation G-90.

K. Castings:

1. Castings shall consist of corrosion resisting metal (white metal) containing not less than 30% nickel. All castings shall be roughly ground, polished, and buffed to bright lustre and free from pit marks, runs, checks, burrs, and other imperfections. In lieu of corrosion resisting metal castings, die-stamped or cast 18-8 stainless steel will be acceptable.

L. Hardware and Casters:

1. All hardware shall be of heavy duty type, satin finished chromium plated brass, cast or forged or highlighted stainless steel of uniform design. All hardware shall be a well-known brand, and shall be identified by the manufacturer's name and model number for easy replacement of broken or worn parts.
2. Casters on custom-built equipment shall be heavy duty type, ball bearing, solid or disc wheel, with greaseproof rubber, neoprene, or polyurethane tire. Wheel shall be 5" diameter, minimum width of tread 1-3/16", minimum capacity per caster 250 pounds, unless otherwise noted.

   a. Solid material wheels are to be provided with stainless steel rotating wheel guard.
   b. All casters shall have sealed wheel and swivel bearings, polished plated finish and be N.S.F. approved.
   c. All equipment specified with casters shall have a minimum of two (2) with brakes installed on opposite corners, unless otherwise noted.

M. Locks:

1. When specified, doors and drawers of all custom fabricated or manufactured equipment shall be provided with cylinder locks, disc tumbler type with stainless steel faceplate as manufactured by Standard-Keil Mfg. Co., or approved equal.

   a. Provide two (2) sets of keys for each lock.

NOT FOR BIDDING

b. All locks shall be keyed alike, except at cashiers stations or unless otherwise specified.

N. Thermometers:

1. All fabricated refrigerated compartments shall be fitted with exterior mounted, adjustable, dial or digital thermometers with flush bezels, and shall be calibrated after installation.

O. Sealants:

1. Sealant, wherever required, shall conform to ASTM C 920; Type S Grade NS, Class 25, Use Nt, with characteristics that when fully cured and washed meets requirements of Food and Drug Administration Regulation 21 CFR 177.2600 and N.S.F. RTV-732 for use in areas where it comes in contact with food.
2. Dow-Corning #780 or General Electric "Silastic", or approved equal, in either clear or approved color to match surrounding surfaces and applied in accordance with sealant manufacturers recommendations for a smooth tooled finish.

2.3 FABRICATION AND MANUFACTURE

A. Materials and Workmanship:

1. Unless otherwise specified or shown on drawings, all materials shall be new, of best quality, perfect, and without flaws. Material shall be delivered and maintained on the job in an undamaged condition.
2. Fabrication shall be equal to the standards of manufacture used by all first class equipment manufacturers, performed by qualified, efficient, and skilled mechanics of the trades involved.
3. All items of standard equipment shall be the latest model at time of delivery.
4. All fabricated work shall be the product of one manufacturer of uniform design and finish.
5. Each fabricated item of equipment shall include all necessary reinforcing, bracing, and welding with the proper number and spacing of uprights and cross members for strength.
6. Wherever standard sheet sizes will permit, the tops of all tables, shelves, exterior panels of cabinet type fixtures, and all doors and drainboards shall be constructed of a single sheet of metal.
7. Except where required to be removable, all flat surfaces shall be secured to vertical and horizontal bracing members by welding or other approved means to eliminate all buckle, warp, rattle, and wobble. All equipment not braced in a rigid manner and which is subject to rattle and wobble shall be unacceptable, and the K.E.C. shall add additional bracing in an approved manner to achieve acceptance.

B. Sanitary Construction:

1. All fabricated equipment shall be constructed in strict compliance with the standards of the National Sanitation Foundation as outlined in their Bulletin on Food Service Equipment entitled "Standard No. 2" dated October 1952, and in compliance with the local and State Public Health Regulations in which the installation will occur.
2. All fabricated equipment shall bear the N.S.F. "Seal of Approval".

NOT FOR BIDDING

C. Construction Methods:

1. Welding:

a. All welding shall be the heliarc method with welding rod of the same composition as the sheets or parts welded. Welds shall be complete, strong, and ductile with excess metal ground off and joints finished smooth to match adjoining surfaces; free of mechanical imperfections such as gas holes, pits, cracks, etc., and shall be continuously welded so that the fixtures shall appear as one-piece construction. Butt welds made by spot solder and finished by grinding shall not be acceptable.

b. Spot welds shall have a maximum spacing of 3". Tack welds shall be of at least 1/4" length, and spaced no greater than 4" from center to center. Weld spacing at the ends of the channel battens shall not exceed 2" centers.

c. In no case shall soldering be considered as a replacement for welding, nor shall any soldering operation be done where dependence is placed on stability and strength of the joint.

d. Fixtures shall be shop fabricated of one piece and shipped to the job completely assembled wherever possible. Equipment too large to transport or enter the building in one piece shall be constructed so that the field joints can be welded at the job site.

e. All exposed joints shall be ground flush with adjoining material and finished to harmonize therewith. Whenever material has been sunk or depressed by welding operation, depression shall be suitably hammered and peened flush with the adjoining surface and ground to eliminate low spots. In all cases the grain of rough grinding shall be removed by successive fine polishing operations.

f. All unexposed welded joints on undershelves of tables or counters of stainless steel shall be suitably coated at the factory with an approved metallic-based paint.

g. After galvanized steel members have been welded, all welds and areas where galvanizing has been damaged shall have a zinc dust coating applied in conformance with Military Specification Number MIL-P-26915.

2. Joints:

a. Butt joints and contact joints wherever they occur, shall be close fitting and shall not require filler. Wherever break bends occur, they shall be free of undue extrudence and shall not be flaky, scaly, or cracked in appearance; where such breaks do mar the uniform surface appearance of the material, all such marks shall be removed by suitable grinding, polishing, and finishing. Wherever sheared edges occur, they shall be free of burrs, fins, and irregular projections and shall be finished to obviate all danger of laceration when the hand is drawn over them. In no case shall overlapping materials be acceptable where miters or bullnosed edges occur.

b. Field welded joints shall be ground smooth without dips and irregularities and finished to match original finish.

3. Bolt, Screw and Rivet Construction:

a. All exposed surfaces shall be free from bolt and screw heads. When bolts are required, they shall be of the concealed type and be of similar composition as the metal to which they are applied.

NOT FOR BIDDING

b. Where bolt or screw threads on the interior of fixtures are visible or may come into contact with hands or wiping cloths, they shall be capped with a stainless steel or chrome acorn nut and stainless steel lock washer.
c. If rivets are used to fasten rear paneling to the body of the fixture, such rivets shall be stainless steel. In no case shall iron rivets be used.

4. Sound Deadening:

a. Schnee Butyl-Sealant 1/2" wide rope continuously between all frame members and underside of stainless steel table tops, overshelves and undershelves.
b. Tighten stud bolts for maximum compression of sealant.

5. Hi-Liting:

a. All horizontal edges of stainless steel tops, splashes, tops of raised rolled rims, and edges of all exposed doors, handles and shelf edges shall be hi-lited, in uniform design by grinding with abrasive not coarser than #240 grit, then polishing with compound to a uniform mirror finish.

6. Polishing:

a. The grain of polishing shall run in the same direction on all horizontal and on all vertical surfaces of each item of fabricated equipment except in the case where the finish of the horizontal sections of each shall terminate in a mitered edge.
b. Where sinks and adjacent drainboards are equipped with backsplash, the grain of the polishing shall be consistent in direction throughout the length of the backsplash and sink compartment.

7. Finishes:

a. Paint and coatings shall be of an N.S.F. approved type suitable for use in conjunction with foodservice equipment. Such paint or coating shall be durable, non-toxic, non-dusting, non-flaking and mildew resistant, shall comply with all governing regulations, and shall be applied in accordance with the manufacturers recommendations.
b. All exterior, galvanized parts, exposed members of framework, and wrought steel pipe where specified to be painted shall be cleaned, primed with rust inhibiting primer, de-greased, and finished with two (2) coats of glossy enamel grey hammerite paint, unless otherwise noted.
c. Where baked enamel finishes are specified, they shall be oven baked on the fixtures for a minimum of 1-1/2 hours at a minimum temperature of 300º F.
d. Fabricated equipment shall be spray coated with plastic suitable for protecting the equipment during transport and installation. The coating shall be easily removable after the equipment installation is complete at the job site, and final clean-up has begun.

D. Construction:

1. Legs:

NOT FOR BIDDING

a. All tubular stands for open base tables, sinks, or dishtables shall have legs constructed of 1-5/8" O.D. stainless steel tubing, with 1-1/4" O.D., #16 gauge stainless steel crossbracing running between legs at a point 10" above finished floor.
b. All joints between legs and crossbracing shall be welded and ground smooth, full 360º.
c. The top end of legs shall be closely fitted into fully-enclosed stainless steel conical gussets no less than 3" high, similar to Klein #481-58 or #482-58, or approved equal.
d. Gussets shall be fully welded to framing reinforcing members, so that, set screw is not visible from front.
e. Legs without crossrails will not be accepted.
f. Legs shall be spaced at not more than 5'-6" on centers, unless otherwise specified.

2. Feet:

a. All tubular legs will be swedged for appearance and close fit to United Show Case #BF-158, or approved equal, fully enclosed, stainless steel bullet-shaped foot.
   1.) The foot shall be threaded into a collar and completely welded inside the tubular leg to permit a maximum adjustment of 2" without any thread exposure.
   2.) Threads shall be National Course Series Class 2 fit or better, machined to prevent end play when foot is at maximum adjustment.
   3.) The bullet-shaped foot shall have slightly rounded bottom to protect the floor, and a minimum bearing surface of 3/4" diameter of stainless steel-to-floor contact.
   4.) Bottom of tubular leg shall be finished off smoothly to provide a sanitary fitting and prevent the accumulation of grease or other debris.

b. Cabinet type fixtures shall be mounted on 8" high die-stamped, sanitary, two-piece stainless steel legs no less than 2-3/4" in diameter at the top, Component Hardware #A72-0811, or approved equal.
   1.) The bottom fully enclosed, stainless steel, bullet-shaped foot threads up into the inside of the upper member, with a male threaded 5/8" bushing to permit maximum adjustment of 2" without thread exposure.
   2.) The upper section shall be stamped in a neat design with a flared inverted shoulder and fully welded to a base plate designed for anchoring to the channel underbracing.

3. Table Tops:

a. Tables shall be constructed of stainless steel, and of a thickness not less than #14 gauge with 1-3/4" by 120º rolled edges, or as otherwise specified and detailed.
b. All corners shall be bull-nosed and of the same radius as rolled edges.
c. Joints where required shall be butt-welded and ground smooth to present a uniform one-piece appearance.
d. All tops shall be reinforced on the underside with a fully welded framework of 1-1/2"x1-1/2"x1/8" galvanized steel angles with the framing extending around the top perimeter and crossbraced on 24" maximum centers.

NOT FOR BIDDING

e. 1"x4"x1" galvanized or stainless steel, fully welded, cross channel, closed end members placed at each pair of legs with one (1) channel running lengthwise will also be acceptable.
f. All tops shall be reinforced so that there will be no noticeable deflection.
g. Metal tops where adjacent to walls or other items of equipment, shall be constructed with integral, coved, back and/or endsplashes as required and specified in accordance with the standard details contained herein. Close all ends of splashes.

4. Enclosed Bases:

a. All enclosed bases or cabinet bodies shall be of seamless #18 gauge stainless steel construction, enclosed on the ends and sides as required and called for under each item.
b. Ends of body shall terminate at front of operator's side in a 2" wide mullion, vertical, and completely enclosed. All intermediate mullions shall be completely enclosed.
c. The bases shall be reinforced at the top with a framework of 1-1/2"x1-1/2"x1/8" galvanized angles, with all corners mitered and welded solid.
d. Underside of top shall be reinforced with channels and gussets where necessary. Additional angles and cross members shall be provided to reinforce shelves and support tops under heavy table top equipment.
e. Where sinks or other drop-in equipment occur, provide additional reinforcing extending crosswise, both sides of opening.
f. In the case of fixtures fitting against or between walls, the bodies shall be set in 1" or 2" from the wall line, with the tops continuing to the wall line with integral, coved splashes as specified. Extend vertical face of body to the wall line only. This will permit adjustment to wall irregularities. Vertical trim strips will not be accepted.
g. Bodies shall be fitted with counter style stainless steel legs as hereinbefore specified.

5. Drawers:

a. Drawers, where specified, shall have removable pan inserts of #18 gauge stainless steel, and shall be approximately 20"x20"x5" deep unless otherwise specified.
   1.) Perimeter top edge shall be flanged out 1/2".
   2.) All interior horizontal corners shall be rounded on a 1" radius, and all interior vertical corners shall be rounded on a 2" radius.

b. Fronts shall be double pan #16 gauge stainless steel construction, 1" thick, insulated with a semi-rigid, fiberglass board, un-faced, having a three-pound density.
   1.) The top of the drawer face shall be formed as an integral pull by breaking the front pan back on a 45º angle 1", then straight up 1", back to front 1", and then down at the front 3/4".
   2.) Drawer front shall have all edges and corners ground smooth with a radius edge pull.

c. The drawer shall have an all welded frame of 1"x1", #16 gauge stainless steel angles sized to fit the removable pan insert.

NOT FOR BIDDING

d. Drawers shall operate on #12 gauge slides with roller bearings with hardened and ground raceways, Grant, Model #3320, or approved equal. Slides shall be pitched approximately 3/8" per foot to permit self-closing action.
e. Drawers shall be adequately and neatly fitted to the guides to permit easy operation without rattle or binding.
f. Slides and frame shall be reinforced to support a dead weight of 250 pounds when drawer is fully extended.
g. Adjustable stops shall be provided for each drawer at the fully-opened position, and be readily lift-able by hand for easy removal of drawer.
h. All drawers not mounted inside a cabinet body shall be completely enclosed in an #18 gauge stainless steel box-type enclosure and suspended from angle framing under the fixture top. The housing bottom shall be flanged and welded to an #18 gauge stainless steel reinforcing channel extending across the open end.

6. Sliding Doors:

a. Sliding doors shall be of the double pan type, with the exterior pan constructed of &2#18 gauge stainless steel with all four sides channeled and corners welded. The interior pan shall be similarly constructed of #20 gauge stainless steel, set into the exterior pan, and welded in place.
b. All doors shall be insulated with semi-rigid fiberglass board, un-faced, having a three-pound density. Styrofoam shall not be acceptable.
c. Doors 18" wide or greater shall have internally welded 4" wide reinforcing channels to prevent warpage.
d. Each door shall be fitted with a positive flush-type stainless steel pull, Standard-Kiel #1262-1014-1283 recessed handle, or approved equal.
e. In the back of each door install a 1"x1", #16 gauge stainless steel angle stop welded in a suitable location to prevent the doors from overpassing the flush pulls.
f. Doors in the closed position shall overlap each other by no more than 2".
g. Each door shall be fitted with two (2), 1-3/8" ball bearing sheaves fastened to 1"x1/8" stainless steel bar stock welded to the top corners of each door for suspending on an overhead #16 gauge stainless steel channel track. The hangers shall be tapped for 1/4"-20 thumb screw vertical locks which prevent the doors from jumping the track in operation while permitting easy removal for cleaning without tools.
h. Insure that the bottom of the doors are positively and continuously guided to assure proper alignment and passing regardless of the position of each door.
i. Provide hard rubber bumpers for doors to close against to insure quiet operation.

7. Hinged Doors:

a. Hinged doors shall be of the same materials and construction as sliding doors previously specified.
b. Hinges shall be heavy duty, stainless steel, removable type, and fastened by tapping into 1/4"x3/4" stainless steel bar stock inside the door pan and behind the door jamb.
c. The door face shall be flush with the cabinet body when fully closed.
d. Size widths of doors equally when installed in pairs, or in series with other pairs, with no door being greater than 36" in width.
e. Doors shall be held closed by permanent magnetic closure devices of an approved type and of sufficient strength to hold the doors shut. Install two (2) per door

NOT FOR BIDDING

(minimum), mounted to the door jamb, top and bottom, with opposing chrome-plated steel plates securely fastened to the inner panel of the doors.

8. Undershelves:

   a. All open base tables shall be provided with full-length undershelves of #16 gauge stainless steel fully welded to legs with all joints ground smooth and polished.
   b. Front edge shall turn down 1-1/2" and under 1/2".
   c. Turn up rear and ends 2", with integral coved radius, when specified.
   d. If required by width, provide 1-1/2"x1-1/2"x1/8" galvanized angle bracing mounted to underside, full length.

9. Interior Shelves:

   a. All interior shelves within cabinet bodies, enclosed bases and overhead cabinets, shall be of #16 gauge stainless steel.
   b. Removable shelves shall be constructed in equal sections, and rest in 1-1/2"x1-1/2"x1/8" stainless steel angle frame. Cove all horizontal corners in accordance with N.S.F. requirements.
   c. Stationary shelves shall have 2" turn-up on back and ends, and continuously welded to cabinet body, polished and ground smooth to form a one-piece interior free of any crevices.
   d. Front edge shall turn down 1-1/2" and under 1/2", and finished with "z" bar forming completely enclosed edge for maximum strength and sanitation.
   e. Provide 1-1/2"x1-1/2"x1/8" angle bracing mounted to underside, full length.

10. Elevated Shelves:

   a. Shelves over equipment set adjacent to a wall shall be mounted on 1" diameter #16 gauge stainless steel tubular standards neatly fitted with stainless steel base flanges, unless otherwise specified.
   b. The top of the tubular standards shall be completely welded to #14 gauge stainless steel support channels, full width of overshelf.
   c. Inside the tubular standard, and welded to same, provide 1/2" diameter steel tension rod extended through countertop and securely anchored to lower framework reinforcing with nuts and lock washers in such a manner as to assure a stable, sway-free structure.
   d. If required by width, provide 1-1/2"x1-1/2"x1/8" stainless steel angle bracing mounted to underside, full length.
   e. Cantilevered shelves, when called for, shall be #16 gauge stainless steel supported on #14 gauge stainless steel brackets welded to 1-5/8" O.D. stainless steel tubular standards extending through the backsplash, and fully welded to the table framework. Provide Klein #481-SH welded sleeves where standards penetrate backsplash.

11. Wall Shelves:

   a. Open wall shelves shall be constructed of #16 gauge stainless steel with back and ends turned up 2", positioned 2" out from face of wall, with all corners welded, and supported on #14 gauge stainless steel brackets.

NOT FOR BIDDING

b. Brackets shall be flanged inward beneath the shelf and at the wall 1-1/2" with intersecting flanges completely welded, and attached to shelf with studs welded to the underside and bolted with stainless steel lock washers and chrome-plated cap nuts.
c. Each bracket shall be fastened to the wall with a minimum of two (2) 1/4"-20 stainless steel bolts anchored securely by means of toggles or expansion shields.

12. Sinks:

a. All sinks shall be the size and shape as shown on drawings and constructed of #14 gauge stainless steel with backs, bottoms and fronts formed of one continuous sheet and the ends welded in place.
b. Sinks shall have all corners, both vertical and horizontal, coved on a 3/4" radius electrically welded, ground smooth and polished. Solder in filleted corners will not be acceptable.
c. Multiple compartment sinks shall be divided with double wall, #14 gauge stainless steel partitions with a 1/2" radius on top and all corners rounded as other corners, continuously welded, ground smooth and polished.
d. The bottom of each compartment shall be creased to a die stamped recess, tapered and shaped to receive a lever type waste without the use of solder, rivets, or welding.
e. Provide #14 gauge stainless steel waste lever angle bracket mounted to underside of compartment at front.
f. The front and exposed ends of sinks shall be fabricated with a 1-1/2", 180º rolled edge. The back and ends adjacent to walls or other fixtures shall be turned up with integral coved edge 12" high and returned 2-1/2" at the top on a 45º angle. Cap ends of all exposed splashes.
g. Unless otherwise specified, two (2) faucet holes on 8" centers shall be provided, located over the center line of partitions between compartments, 2-1/2" down from splash break.
h. Gussets for legs shall be fully welded all around to #12 gauge stainless steel triangular plates fully welded to underside of sink.
i. Sinks fabricated into working surfaces shall be constructed of the same material and in like manner to sinks specified above, except rolled edge and backsplash shall be omitted and the bowl shall be completely welded integral and flush with the working surface. Where basket type wastes are called for, they shall be fitted with removable seats.
j. Where sink bowls are exposed, the exterior shall also be polished to a #4 finish.

13. Sink Drainboards:

a. Drainboards shall be constructed of the same material as the sinks and shall be welded integral to same.
b. The front portion of drainboards shall continue the 1-1/2", 180º rolled edge of sink bowls on a continuous and level horizontal plane.
The surface of the drainboard shall pitch from 2-1/2" at the end furthest from the sink, to 3" at the bowl; or 1/8" per foot. In addition, the bottom surface shall be dished toward the center for complete drainage.
d. The backsplash of the drainboard shall match the rear of the sink contour and shall be welded integral thereto, running parallel to the floor.

NOT FOR BIDDING

e. Drainboards shall be reinforced on the underside with a framework of 1"x4"x1" stainless steel channel underbracing placed at each pair of legs, with exposed ends capped, and one (1) channel running lengthwise.
f. Where disposer cones are fabricated into drainboards, additional 1"x4"x1" stainless steel channels shall be welded into the top framing, spanning the drainboard from front-to-back on both sides of the cone and located not more than 3" to either side.
g. Disposer control panels or switches shall be supported beneath drainboards, when specified, by means of a #12 gauge stainless steel mounting bracket.

14. Dishtable Tops:

a. Dishtables shall be constructed of #14 gauge stainless steel with all corners, both vertical and horizontal, coved on a 3/4" radius electrically welded, ground smooth and polished. Solder in filleted corners will not be acceptable.
b. Fronts and exposed ends shall be fabricated with 3" high, 1-1/2", 180º rolled edge with rounded corners. The back and ends adjacent to walls or other fixtures shall be turned up with integral coved backs 12" high and returned 2-1/2" at the top on a 45º angle. Cap ends of all exposed splashes.
c. All tops shall slope 1/8" per foot (minimum).
d. Dishtables shall be reinforced on the underside with a framework of 1"x4"x1" stainless steel channel underbracing placed at each pair of legs, with exposed ends capped, and one (1) channel running lengthwise fully welded between front-to-back channels.
e. Where tops fit into dishmachines they shall turn down and into, forming a sealed watertight fit, and attached according to dishmachine manufacturers instructions.
f. On each side of dishmachine, tables shall be provided with integral splash shields as part of the backsplash.
g. Silicon filling of gaps caused by poor fit will not be acceptable.
h. On corner-type dishmachines, provide #14 gauge stainless steel wall-mounted, splash panel to protect adjacent wall, full width of door opening.

15. Cafeteria Style Counters:

a. All counters shall be constructed as previously specified under Enclosed Bases.
b. Provide top and bottom framing for each counter food pan, cold pan, coffee urn, ice cream unit, ice bin, dish dispenser, etc., whether a drop-in unit or a cutout for a portable unit.
c. Where plate shelves occur, frame horizontally 8-1/2" back from counter edge or as design dictates, and at bottom of shelf at counteredge.
d. The countertop shall be constructed of #14 gauge stainless steel, as previously specified, with all joints welded, ground and polished.
e. Fronts and exposed ends shall be stainless steel, plastic laminate or other material as noted in the Item Specifications.
f. All display glass shelving shall be 1/4" polished plate glass and fully trimmed with #16 gauge stainless steel formed channels. Top shelves shall be the same width as the shelf below. Shelves shall be supported on 5/8" square, #16 gauge stainless steel perimeter tubing fully welded to 1-1/4" square, #16 gauge stainless steel tubing uprights.
g. Provide appropriate adjustable glass sneeze or breath guards trimmed in stainless steel along front, entire length, mounted in Klein 4465-A brackets.

NOT FOR BIDDING

h. Protector shelf over hot food wells shall be #16 gauge stainless steel supported on 1-1/4" square, #16 gauge stainless steel tubing uprights, with 1/4" polished plate glass front and end panels trimmed in #18 gauge stainless steel channels. When specified for self-service, mount bottom edge of front panel 8" above countertop.
i. All display and protector shelves shall be furnished with full-length fluorescent lights wired to on/off switch in counter apron, with lamps and protective shields. Conceal all wiring in tubular uprights.
j. Refer to Item Specification for changes, as required.
k. Counter shall be internally wired complete by the K.E.C. and in such a way as to meet the requirements of the Electrical Code of the job location.

2.4 EQUIPMENT

A. All items listed on the Contract Documents under the heading "Equipment Schedule" shall be furnished in strict accordance with the foregoing specifications and with the following detailed Itemized Specifications.

B. Manufacturer's names and model numbers are shown establishing quality, size, and finish required, representing the Owner's and Consultant's requirements and basis for bid. Equipment is listed hereinafter with same item numbers as shown on Contract Documents.

PART 3 - EXECUTION

3.1 INSPECTION

A. Before beginning the installation of foodservice equipment, the spaces and existing conditions shall be examined by the K.E.C. and any deficiencies, discrepancies, or unsatisfactory conditions for proper installation of foodservice equipment shall be reported to the Architect in writing.

1. Do not proceed with installation until unsatisfactory conditions have been corrected in a manner satisfactory to the installer.
2. Beginning installation shall constitute acceptance of the area.

3.2 PREPARATION

A. Foodservice equipment drawings are diagrammatic and intended to show layout, arrangement, mechanical and electrical requirements.

B. Field verify all measurements at the building prior to fabrication of custom equipment. Coordinate measurements and dimensions with rough-in and space requirements.

3.3 INSTALLATION

A. The K.E.C. shall coordinate his delivery schedule with the Contractor to ensure adequate openings in the building to receive the equipment.

NOT FOR BIDDING

B. Equipment shall be un-crated, fully assembled and set level in position for final connections. Parts shipped loose but required for connection shall be properly tagged and shall be accompanied by the necessary installation instructions.

C. Provide a competent, experienced foreman to supervise installation and final connections with other trades.

D. Remote Refrigeration Systems:

1. All refrigeration work where applicable to this contract shall be accomplished in an approved manner, using finest quality fittings, controls, valves, etc.
2. Refrigeration items shall be started up, tested, adjusted and turned over to the Owner in first class condition and left running in accordance with the manufacturer's instructions.
3. Refrigeration lines and hook-ups shall be completed by the K.E.C. with the exception of electric, water, and drain line final connections unless otherwise specified.
4. All copper tubing shall be refrigerant grade A.C.R. or type "L".
5. Silver solder and/or Sil-Fos shall be used for all refrigerant piping. Soft solder is not acceptable.
6. All refrigerant lines in pipe sleeves or conduit shall be effectively caulked at ends to prevent entrance of water or vermin and at penetrations through walls or floors.
7. All tubing shall be securely anchored with clamps, and suspended lines shall be supported with adjustable hangers at 5-0" o.c. maximum.
8. Wrap drain line in freezer compartment(s) with approved heat-tape for final connection by Electrical Contractor.

E. Sealing and Caulking:

1. Prior to the application of sealant, all surfaces shall be thoroughly cleaned and de-greased.
2. Apply around each unit of permanent installation at all intersections with walls, floors, curbs or other permanent items of equipment.
3. Joints shall be air-tight, water-tight, vermin-proof, and sanitary for cleaning purposes.
4. In general, joints shall be not less than 1/8" wide, with backer rod to shape sealant bead properly at 1/4" depth. Shape exposed surfaces of sealant slightly concave, with edges flush with faces of materials at joint.
5. At internal corner joints, apply sealant or gaskets to form a sanitary cove, of not less than 3/8" radius.
6. Provide sealant-filled joints up to 3/4" in joint width. Trim strips for wider joints shall be set in a bed of sealant and attached with stainless steel fasteners, 48" o.c., or less, to insure suitable fastening and prevent buckling of the metals fastened.

F. Cutting:

1. All cutting, fitting, or patching required during installation shall be accomplished by the K.E.C. at his own expense, so as to make the work conform to the plans and specifications.
2. The K.E.C. shall not cut or otherwise alter, except with the consent of the Owner, the work of any other Contractor.
3. Provide cut-outs in foodservice equipment where required to run plumbing, electric, or steam lines through equipment items for final connections.

NOT FOR BIDDING

3.4 FIELD QUALITY CONTROL

A. Inspection:

1. Provide access to shop fabrication areas during normal working hours to facilitate inspection of the equipment, during construction, by the Architect or his authorized representative.
2. Errors found during these inspections shall be corrected to the extent required within the scope of the plans, specifications, and approved drawings.

B. Start-Up and Testing:

1. Delay start-up of foodservice equipment until service lines have been tested, balanced, and adjusted for pressure, voltage, and similar considerations; and until water and steam lines have been cleaned and treated for sanitation.
2. Before testing, lubricate each equipment item in accordance with manufacturer's recommendations.
3. Supply a trained person or persons who shall start up all equipment, test and make adjustments as necessary, resulting in each item of equipment, including controls and safety devices, performing in accordance with the manufacturer's specifications.
4. All gas-fired equipment shall be checked by the local gas company as to calibration, air adjustments, etc., and adjustments made as required.
5. Repair or replace any equipment found to be defective in its operation, including items which are below capacity or operating with excessive noise or vibration.

C. Demonstration:

1. Provide an operating demonstration of all equipment at a time of Owner's convenience, to be held in the presence of authorized representatives of the Architect and Owner.
2. Demonstration shall be performed by manufacturer's representative knowledgeable in all aspects of his equipment.
3. During the demonstration, instruct the Owner's operating personnel in the proper operation and maintenance of the equipment.
4. Furnish complete bound, operation/maintenance manuals and certificates of warranty for all items of equipment provided, in accordance with Article 1.5 Submittals, Paragraph F, at this demonstration time.

3.5 ADJUST AND CLEAN

A. Upon completion of installation and tests, clean and sanitize foodservice equipment, and leave in condition ready for use in food service.

B. Remove all protective coverings, and thoroughly clean equipment both internally and externally.

C. Make and check final adjustments required for proper operation of the equipment.

D. Restore finishes marred during installation to remove abrasions, dents, and other damages. Polish stainless steel surfaces, and touch-up painted surfaces with original paint.

NOT FOR BIDDING

E. Clean up all refuse, rubbish, scrap materials, and debris caused by the work of this Section, and put the site in a neat, orderly, and broom-clean condition.

3.6 ITEMIZED EQUIPMENT

ITEM #1: MOP SINK & RACK

QUANTITY: One (1)
MANUFACTURER: IMC Teddy
MODEL NO.: FS (N058)
PERTINENT DATA: Floor Mounted, Stainless Steel
UTILITIES REQ'D: 1/2" HW, 1/2" CW, 2" W
ALTERNATE MFRS.: Eagle Group

Furnish and set-in-place per Equipment Plan, Sheet K101C; Manufacturer's Instructions and the following:

1. Accessories:
   -- One (1) #HA hose assembly, 36" long.
   -- One (1) #SSF service sink wall faucet.
   -- One (1) #MH mop holder with four (4) individual rubber holders.

2. K.E.C. to furnish #16 gauge stainless steel wall flashing along two (2) walls adjacent sink, 48" high. Attach to wall with non-exposed fasteners and seal to wall and sink.

ITEM #2: SHELVING

QUANTITY: Eight (8)
MANUFACTURER: InterMetro Industries Corporation
MODEL NO.: Super Erecta (N058)
PERTINENT DATA: Five-Tier High, Stationary, Free-Standing, Chrome-Plated, Wire
UTILITIES REQ'D: ----
ALTERNATE MFRS.: None

Furnish and set-in-place per Equipment Plan, Sheet K101C; Manufacturer's Instructions and the following:

<u>Dry Storage</u>:

1. Two (2) #1836NC sections; 18" W x 36" L x 4-tier high.

2. Six (6) #1848NC sections; 18" W x 48" L x 4-tier high.

3. Thirty-two (32) #63P chrome-plated posts; 62-9/16" high.

4. Plastic split sleeves, quantity as required.

5. Locate bottom shelf @ 12" A.F.F.; space remaining shelves equally.

NOT FOR BIDDING

ITEM #3: WALK-IN COOLER/FREEZER

QUANTITY: One (1)
MANUFACTURER: Thermo-Kool
MODEL NO.: Indoor Installation (N058)
PERTINENT DATA: 4" Thick Urethane Panel - Class I, NSF Construction
UTILITIES REQ'D: 1,300W, 120V, 1PH; (2) 3/4" IW
ALTERNATE MFRS.: ThermalRite; Master-Bilt; Bally

Furnish and install per Equipment Plan, Sheet K101C; Building Conditions Plan, Sheet K102C; Manufacturer's Shop Drawing and the following:

1. Two-Section Unit, 13'-6" L x 10'-8" D x 8'-6" H. Interior width - Cooler: 6'-8"; Freezer: 5'-10".

2. Exterior Finish:
   -- 26 GA stucco embossed galvanized steel where unexposed.
   -- 22 GA stucco embossed stainless steel where exposed.

3. Interior Finish:
   -- White .040 stucco embossed aluminum walls.
   -- White acrylic enamel baked on 26 GA smooth galvanized steel ceiling.

4. Interior Floor:
   -- 4" prefabricated heavy-duty structural floor panels with foamed-in ¾" plywood reinforcing for resin floor application installed over hot asphalt paper or 10 MIL polyethylene sheets on building floor slab per Detail, Sheet K102C.

5. Entrance Door:
   -- Two (2) flush-mounted, self-closing, right-hand hinged doors with 34" x 76" net opening.
   -- Brushed chrome camlift hinges with lift off capability. Provide one (1) extra hinge per door, three (3) total.
   -- Kason #1236 brushed chrome lever action handle with knob turn release and cylinder lock.
   -- Kason #09440004 brushed chrome dead-bolt lock, factory mounted.
   -- Hydraulic door closer.
   -- Mount Kason #1806 LED light fixture centered over door opening to avoid conflict with shelving, each compartment. Extend wiring for door frame heater and light fixture up in conduit, foamed within door panel, to junction box mounted on top of walk-in ceiling, each compartment.
   -- Standard 2" diameter dial indicating thermometer factory mounted, each compartment.
   -- Pilot light and switch assembly factory mounted in door frame with stainless steel coverplate.
   -- 36" high aluminum diamond tread kickplates, interior and exterior of door, frame and jamb.
   -- 14" x 24" heated observation windows, <u>both</u> entrance doors.
   -- Undercut doors for resin floor.
   -- Kason #907 interior door handle, factory mounted, with concealed metal backing plate.
   -- Round vinyl door bumper mounted to front exterior face to protect handle from puncturing wall when door in full open position.
   -- Stainless steel heated threshold, both compartments.
   -- Engraved phenolic plastic compartment signs - 12" long x 2" high; white in color with 1" high blue CAPITAL letters mounted on each door above observation window; (1) - COOLER, (1) - FREEZER.

NOT FOR BIDDING

ITEM #3: (Continued)

6. One (1) heated pressure relief port in freezer.

7. Two (2) Kason #1810L21248LB 48" long twin-tube LED light fixtures with shatter-proof high impact plastic covers centrally-mounted to walk-in ceiling per Detail, Sheet K104C, one (1) for the cooler, one (1) for the freezer. Provide low-temperature ballast (-20°F) in freezer lights. Fixtures shipped loose and mounted by K.E.C.; final connection by Electrical Contractor.

8. Modularm Corporation Model 75LC recessed digital thermometer with audio-visual temperature alarm factory mounted in door panel and inter-wired with building monitoring system, as required by Electrical Contractor. Extend temperature probes to rear of each compartment.

9. Provide and install trim strips of matching exterior finish between ends of walk-in panels and building walls from finish floor to 6" above finish ceiling; K.E.C. to verify ceiling height.

10. Provide and install closure panels of matching exterior finish between top of walk-in and finish ceiling per Detail, Sheet K102C. K.E.C. to verify finished ceiling height.

11. All electrical conduit shall be run concealed <u>above</u> walk-in ceiling, per Detail Sheet K104C.

12. Evaporator coil drain lines shall be run to floor drain with "P"-trap on exterior of box by K.E.C.

13. Black flexible "Armaflex" insulation applied to exposed drain lines and fittings within interior of box by K.E.C.

14. Spiral heat tape applied to drain line within interior of freezer compartment prior to application of insulation by K.E.C. Drain line heating cable shall be installed for continuous 24-hour operation.

15. Coordinate location of sprinkler system nozzles and provide penetrations, where necessary.

16. Seal and insulate all openings to prevent infiltration of warm air into cooler/freezer compartments.

17. Quality Inspection Requirements:
    -- Walk-In shall be completely erected at the manufacturer's facility prior to shipment and a quality control inspection performed on the assembled structure. A digital photograph of the assembled walk-in shall be provided for the K.E.C. permanent records and included in the operation and maintenance manuals.

18. Accessories:
    -- One (1) Mars Air ProPro #LPN36-IU air door curtain factory installed above cooler door with optional on/off microswitch. Electrical Contractor to provide power receptacle and final connection. Mount fan centered over walk-in door opening and attach to wall panel with thru-bolts.

NOT FOR BIDDING

ITEM #4: REFRIGERATION SYSTEM

QUANTITY: One (1)
MANUFACTURER: ColdZone
MODEL NO.: MPL-2CZ (N058)
PERTINENT DATA: Mini-Pak, Air-Cooled, Outdoor Installation, Remote, With Demand Defrost Controller
UTILITIES REQ'D: 27.3A, 208V, 3PH
ALTERNATE MFRS.: Omni-Temp; RDT; Master-Bilt; Bally

Furnish and set-in-place per Equipment Plan, Sheet K101C; Building Conditions Plan, Sheet K102C; Manufacturer's Shop Drawing and the following:

1. One (1) pre-engineered system including condensing units, evaporator coils, and all required piping, valves and accessories.

2. Air-cooled system designed and sized for year-round outdoor operation in Felton, Delaware.

3. System located outdoors on roof. Curb with pitch-pocket furnished and installed by General Contractor. Refer to Architectural Plan, Sheet A103-C for exact location.

4. Overall size: 72" long x 36" wide x 37" high weighing 616 lbs. with installation clearance of 3'-0" on all sides.

5. The system shall be housed in a single, compact rust-proof cabinet and utilize a multi-circuited air-cooled condenser design. Side panels and base shall be comprised of 18 and 14 gauge all welded steel, respectively, with 16 gauge top. Entire frame shall be pre-assembled, fully welded, cleaned structural steel painted with a prime coat of zinc chromate and shall be finished with two (2) coats of Baja Beige and one (1) coat of clear epoxy based "Enviro-Kote."

6. Hot air discharge from condenser fans shall be vertical. Fan motors shall be not less than 1/2 HP with a venturi-contoured air scoop furnished for each fan to reduce air turbulence and fan loading. Fans shall be equipped with thermal sensing controls mounted inside the control panel designed to operate the minimum number of fans required for adequate air flow under varying ambient conditions. Fan blades shall be not less than 20" in diameter and protected with a plastic coated fan guard.

7. Unit shall be provided with hermetic compressors; Copeland 3.0 HP Model CF12K6E for the Freezer; Copeland 1.25 HP Model KAGA-010E for the Cooler and condenser circuit for Item #19: Ice Machine. Each unit shall be equipped with hi-low pressure control, liquid line dryer, sight glass, suction and discharge vibration eliminator, head pressure control, and crankcase heaters, all factory assembled.

8. All compressor units shall be new and factory assembled to operate with CFC-free refrigerants; R-404A shall be used for medium and low-temperature applications.

NOT FOR BIDDING

ITEM #4: (Continued)

9. Each compressor shall be equipped with an oversized receiver. Such receivers shall be equipped individually with a fusible plug, as well as installed king and queen valves equipped with service ports. Each receiver shall have a pump down capacity large enough to accept the total liquid volume of refrigerant in the system without exceeding 80% of the volumetric capacity at the designed operating pressure and temperature.

10. Unit shall be provided with a 15º TD air-cooled condenser coil with staggered tube design for greater thermal efficiency. The coil shall be tested to 400 PSI and shall be self draining to assure efficient operation and proper oil return. The condenser fan motor shall be inherently protected and have life-lubricated bearings. A fan guard shall be provided with each motor. Liquid receiver shall conform to UL or ASME codes and bear the appropriate label or stamp.

11. All refrigerant lines shall be extended to one side of the package in a neat and orderly manner for connection to refrigerant lines penetrating thru building exterior walls.

12. All tubing shall be securely supported and anchored with clamps.

13. All copper tubing to be refrigerant grade A.C.R. or type L.

14. Silver solder and/or Sil-fos shall be used for all refrigerant piping. Soft solder is not acceptable.

15. All piping to be pressure tested with nitrogen at 200 psi. After the condensing unit and coil have been connected, balance of the system shall be leak-tested with valves open.

16. The package system shall have a factory mounted and pre-wired control panel complete with main fused disconnect switch, compressor circuit breakers, contactors, and time clocks wired for single power connection.

17. Electrical Contractor shall provide and install power lines to the control panel, and provide wiring for control and defrost heater between the defrost clock and the refrigeration fixtures, all in accordance with the wiring diagram and local codes.

18. The complete system shall be evacuated with a vacuum pump.

19. K.E.C. shall charge, test, and adjust each unit to be in an operational system.

20. Refrigeration Contractor and/or K.E.C. to provide and install drain line heater in freezer to be connected by Electrical Contractor.

21. Evaporator Coil with High-Efficiency EC Motors -- Walk-In Freezer: Low-Profile, End-Mount Type, Model AE2-085E, 0.9A, 208V, 1PH (Fan); 8.7A, 208V, 1PH (Defrost Heater)
    - -- System to operate at -10º F.
    - -- Furnished complete with thermostat, solenoid, and expansion valves factory mounted ready for final connection by Refrigeration Contractor.
    - -- Surveillance Evaporator Controller to consist of a microprocessor driven controller that reduces the energy used by the evaporator coil in refrigerations systems through precise control of superheat, fan management and demand defrosts.

NOT FOR BIDDING

ITEM #4: (Continued)

22. Evaporator Coil with High-Efficiency EC Motors -- Walk-In Cooler: Low-Profile, End-Mount Type, Model AA28-106B, 1.8A, 120V, 1PH
    - -- System to operate at +35º F.
    - -- Furnished complete with thermostat, solenoid, and expansion valves factory mounted ready for final connection by Refrigeration Contractor.

23. Factory installed main-fused disconnect switch.

24. Systems marked in sequence shall be a factory package refrigeration system UL approved.

25. K.E.C. shall guarantee all items in the Packaged Refrigeration System against defects, including all parts and labor for one (1) year. The guarantee is to commence on the day installation is made operational. All repairs and replacements necessary during this period shall be affected at the K.E.C.'s expense on a 24-hour, 7-day a week basis, including emergency service. An emergency service telephone number shall be conspicuously posted in the foodservice office.

26. During the first 1-year period, it shall be the K.E.C.'s responsibility to provide all necessary preventive maintenance to protect the interest of all concerned. This shall embrace all components and the performance of the system including coils, valves, controls, etc. furnished with the refrigeration equipment.

27. Provide a 4-year extended factory warranty on all compressors.

28. Provide any required instruction to Plumbing and/or Electrical Contractors for services or related work, as well as, specifications for the preparation of joinings, connections, and materials to be used to the General Contractor.

29. Provide, for record and reference, as-built diagram of piping systems showing actual locations, components, system identification, and refrigerated equipment on each system. As-built diagram shall be provided in laminated plastic form and shall be conspicuously located in the Engineer's Office. Actual refrigeration system components shall be tagged in a permanent manner to match the as-built diagram.

30. Installation drawings and manufacturer's specification sheets shall be submitted to the architect/owner for approval prior to commencing work. Drawings shall include refrigeration piping showing actual line size and system allocation, evaporators, compressors, condensers, and all required valves and accessories. Local fire code may require that fiberglass insulation be provided. Such insulation procedure shall be by the General Contractor.

31. Provide testing and charging of the entire system for the Foodservice General Specifications, Electrical and Mechanical Requirements.

NOT FOR BIDDING

ITEM #5: HAND SINK

QUANTITY: One (1)
MANUFACTURER: Eagle Foodservice Equipment Company
MODEL NO.: HSAP-14-ADA-FE-B (N058)
PERTINENT DATA: Wall-Mounted Special Purpose - Hands Free ADA Type
UTILITIES REQ'D: 1/2" HW, 1/2" CW, 1-1/2" W
ALTERNATE MFR.: Advance/Tabco; Select Stainless

Furnish and set-in-place per Equipment Plan, Sheet K101C; Manufacturer's Instructions and the following:

1. Physically challenged unit furnished complete with splash mounted battery-powered electronic-eye faucet with low battery indicator light, basket drain, front loading C-fold paper towel dispenser, deck-mounted soap dispenser, stainless steel skirt and stainless steel wall brackets.

2. Accessories:
   -- One (1) #326015 temperature adjustment valve.
   -- One (1) #326696 anti-scald valve.
   -- Left and right side splashes.

ITEM #6: SHELVING, MOBILE

QUANTITY: Seven (7)
MANUFACTURER: InterMetro Industries Corporation
MODEL NO.: MetroMax i (N058)
PERTINENT DATA: Four-Tier High, 18" Wide, Open-Grid Shelf Mat, Polymer
UTILITIES REQ'D: ----
ALTERNATE MFRS.: None

Furnish and set-in-place per Equipment Plan, Sheet K101C; Manufacturer's Instructions and the following:

<u>Cooler</u>:

1. Two (2) #MX1848G sections; 18" W x 48" L x 4-tier high.

2. Eight (8) #MX63UP polymer posts for stem casters, 63" high.

3. Eight (8) #5MPX polyurethane swivel casters with bumpers.

4. Eight (8) #5MPBX polyurethane swivel casters with brakes and bumpers.

5. Plastic wedge-lock connectors, quantity as required.

6. Locate bottom shelf @ 12" A.F.F.; space remaining shelves equally.

NOT FOR BIDDING

ITEM #6: (Continued)

Freezer:

1. Two (2) #MX1836G sections; 18" W x 36" L x 4-tier high.

2. One (1) #MX1842G section; 18" W x 42" L x 4-tier high.

3. Two (2) #MX1848G sections; 18" W x 48" L x 4-tier high.

4. Twenty (20) #MX63UP polymer posts for stem casters, 63" high.

5. Ten (10) #5MPX polyurethane swivel casters with bumpers.

6. Ten (10) #5MPBX polyurethane swivel casters with brakes and bumpers.

7. Plastic wedge lock connectors, quantity as required.

8. Locate bottom shelf @ 12" A.F.F.; space remaining shelves equally.

ITEM #7: PAN RACK CART, MOBILE -- (EXISTING ITEM - TO BE RE-USED)

QUANTITY: Two (2)

Relocate to position shown on Equipment Plan, Sheet K101C and Manufacturer's Instructions.

ITEM #8: PREP SINK

QUANTITY: One (1)
MANUFACTURER: Custom Fabricated
MODEL NO: #14 GA Stainless Steel
PERTINENT DATA: 6'-3" Long x 2'-6" Wide x 2'-10" High
UTILITIES REQ'D: 1/2" HW, 1/2" CW, (2) 1-1/2" IW
ALTERNATE MFRS.: Eagle SpecFAB; Select Stainless

Fabricate and set-in-place per Equipment Plan, Sheet K101C; Fabrication Detail, Sheet K108C; and the following:

1. Front and end edge rolls per Detail 1.02B.

2. 13" high backsplash per Detail 1.04A. Attach backsplash to wall with fabricator-supplied z-clips.

3. Framework per Detail 1.05.

4. Legs per Detail 1.07.

5. Stainless steel undershelf on both ends per Detail 1.11.

NOT FOR BIDDING

ITEM #8: (Continued)

6. Full-length table-mounted stainless steel overshelf per Detail 1.12A.

7. Sound-deaden underside of sinks and drainboards with NSF-approved sound dampening material.

8. Accessories:
   -- One (1) T&S #B-0231 backsplash-mounted swing spout faucet with #B-0199-1 aerator.

9. Item will remain shrink-wrapped until ready for final connection by Plumbing Contractor. Immediately following completion of final connections, K.E.C. shall re-shrink-wrap tubs or provide removable panel to avoid use by construction trades. Post sign on wall above sink tubs in English and Spanish stating: WARNING! NOT TO BE USED BY CONSTRUCTION TRADES. FAILURE TO COMPLY WILL RESULT IN $500.00 FINE AND ALL COSTS TO REPLACE ITEM WITH NEW.

ITEM #9: WORKTABLE

QUANTITY: One (1)
MANUFACTURER: Custom Fabricated
MODEL NO.: #14 GA Stainless Steel
PERTINENT DATA: 5'-0" Long x 2'-6" Wide x 2'-10" High
UTILITIES REQ'D: ----
ALTERNATE MFRS.: Eagle SpecFAB; Select Stainless

Fabricate and set-in-place per Equipment Plan Sheet K101C; Fabrication Detail, Sheet K108C and the following:

1. Front and end edge roll per Detail 1.03M.

2. 6" high backsplash per Detail 1.04.

3. Framework per Detail 1.05.

4. Legs per Detail 1.07.

5. Crossbracing per Detail 1.10.

6. Worktable per Detail 2.01.

7. Sound-deaden underside of worktable with NSF-approved sound dampening material.

NOT FOR BIDDING

ITEM #10: UTILITY RACEWAY

QUANTITY: One (1)
MANUFACTURER: Captive-Aire Systems, Inc.
MODEL NO.: UDI (N058)
PERTINENT DATA: Island, Modular Type
UTILITIES REQ'D: 40.0A, 120/208V, 3PH; 3/4"HW, 3/4" CW; 1-1/2" Propane Gas @ 1,200MBH (Looped Service)
ALTERNATE MFRS.: Avtec; Gaylord

Furnish and install per Equipment Plan, Sheet K101C; Utility Raceway Details, Sheet K106C; Manufacturer's Shop Drawing and the following:

1. All components and labor necessary for a complete system manufactured in accordance with NEC latest edition, NEMA, NFPA No. 96 and No. 54, Uniform Plumbing Code, ASME, OSHA using only U.L. Listed certified components.

2. 10'-0" long x 12" wide x 6'-8" high with risers, completely pre-wired and pre-plumbed to one final connection point for electric, gas, hot water and cold water. All connections shall face down on horizontal member.

3. System shall extend up to bottom edge of Ventilator Item #11.

4. 4'-7" overall height less risers with peaked top.

5. 36" long x 12" wide x 6'-10" high risers on each end with 2" penetration into ventilator at 6'-8" A.F.F.

6. Entire raceway shall be constructed of #16 gauge Type 304 stainless steel with a #4 mill finish.

7. Removable link plates constructed of #16 gauge stainless steel.

8. Electrical compartment shall be completely enclosed with stainless steel housing accessible by the removal of link plates. Internal electrical feeder shall be cable busbar having balanced load and phases and with connection lugs for main service. Branch circuit wiring for each electrical connection shall be phase identified and sized in accordance with circuit breaker rated capacity. Raceway shall provide electrical, gas and water service for items #12, #13, #14, #15 and #16.

9. Provide 12" long interchangeable 16 gauge stainless steel link connection plate for each electrical connection wired to electrical load center in riser end with individual circuit breaker(s) and grounding type receptacle with twist-lock feature or pre-wired flexible sealtite conduit.

10. On each connection plate provide U.L. listed GFIC ground fault interrupter circuits and matching power supply cords on each 120-volt single-phase connection.

11. Hot water and cold water plumbing compartment shall be isolated from electrical compartment. All piping and disconnects in system shall be color coded.

NOT FOR BIDDING

ITEM #10: (Continued)

12. All hot and cold water piping, including individual branch pipe connection, shall be hard temper type "L" copper tubing with copper sweat type solder fittings. At each individual connection, provide A.G.A approved flexible hose(s) with two wall brass and stainless steel construction with quick-disconnect fittings.

13. At each individual gas branch connection, provide 1/4-turn ball valve and 48" long Dormont PVC coated AGA and NSF approved flexible hose with SnapFast quick-disconnect device and double SwivelMAX gas connectors.

14. Provide fire/fuel shut-off for electric equipment per NFPA No. 96. System shall require one final connection by Contractor from fire protection system.

15. Provide matching cord sets for all electric equipment, six (6) total.

16. Neoprene bumper strips, full length.

17. Provide each mobile piece of equipment with an A.G.A. recognized restraining device protecting respective gas disconnect assemblies and connectors.

18. Factory mounted pre-piped gas solenoid valves at each incoming gas service.

19. U.L. listed, solid-state control panel mounted in left-hand riser end, with the following integral accessories:
    -- Ventilator start/stop station with adjustable time-delay to exhaust residual heat.
    -- Ventilator light switch, pre-wired in 1/2" flexible conduit ready for connection to light junction box in ventilator by Electrical Contractor.

20. Fabricated in three (3) sections, assembled in field to present integral one-piece appearance.

21. Main electrical shunt-type circuit breakers mounted in left-hand riser for 40.A, 120/208V, 3PH service.

22. Factory supervision of installation and start-up.

23. Raceway shall be of same manufacturer as Ventilator, Item #11.

ITEM #11: VENTILATOR

QUANTITY: One (1)
MANUFACTURER: Captive-Aire Systems, Inc.
MODEL NO.: 6030ND-2-PSP-F (N058)
PERTINENT DATA: Island, Back-to-Back Configuration, Captrate Solo Filter Type, Internal Make-up Air, With Demand Control Ventilation (DCV) System & Fire Protection System
UTILITIES REQ'D: 4,275 CFM Exhaust, 3,600 CFM Supply (Tempered); 350W, 120V, 1PH (Lights)
ALTERNATE MFRS.: Avtec; Gaylord

NOT FOR BIDDING

ITEM #11: (Continued)

Furnish and install per Equipment Plan, Sheet K101C; Ventilator Detail Drawing, Sheet K106C; Manufacturer's Instructions and the following:

1. 11'-0" Wide x 10'-0" Long x 2'-6" High, with bottom edge mounted at 6'-8" A.F.F. Length comprised of one (1) 10'-0" section and one (1) 9'-0" section. Entire unit constructed of 18 GA stainless steel with liquid tight all welded external continuous seams and joints per N.F.P.A. 96, U.L. and State of Delaware Codes.

2. Four (4) U.L. Listed, NSF-Approved, 36" long twin-tube recessed LED light fixtures, two (2) equally spaced each section. Bulbs furnished and installed by K.E.C.

3. Matching stainless steel perimeter closure panels to finished ceiling, K.E.C. to verify ceiling height.

4. Surface fire protection system nozzles and piping to be factory installed, chrome plated or stainless steel where exposed, ready for final connections by fire protection system sub-contractor.

5. Hanger rods and support system from structure above by General Contractor. K.E.C. to coordinate method and location with other trades.

6. Stainless steel hanger brackets.

7. 12" wide stainless steel angle framing and closure panels to accommodate Utility Raceway, Item #10.

8. Full-length, front-mounted completely insulated, perforated stainless steel ceiling-mounted make-up air plenum with integral supply air balancing dampers for each hood section.

9. Stainless steel captrate solo U.L. classified high-efficiency grease filters.

10. Semi-concealed stainless steel grease trough sloped to removable grease cups.

11. Factory supervision of installation and start-up.

12. Ventilator shall be of same manufacturer as Utility Raceway, Item #10.

13. Accessories:
    - -- 12" wide utility cabinet mounted on left end of hood facing serving area with factory pre-piped Ansul R-102 fire suppression system and U.L. Listed pre-wired electrical package #DCV-2111 with light switches, lighted fan control switches, and internal factory wiring and components to reduce field wiring requirements.
    - -- One (1) Ansul Model K01-2 hand-held fire extinguisher, 1.6 gallon, wall-mounted.

NOT FOR BIDDING

ITEM #12: RANGE/OVEN, MOBILE

QUANTITY: One (1)
MANUFACTURER: Garland Commercial Industries, Inc.
MODEL NO.: GFE36-6R (N058)
PERTINENT DATA: Standard Oven Base; (6) Open Burners, GFE Restaurant Series, With Electronic Spark Ignition & Flame Failure Protection
UTILITIES REQ'D: 0.1A, 120V, 1PH; 3/4" Propane Gas @ 194 MBH
ALTERNATE MFRS.: None

Furnish and set-in-place per Equipment Plan, Sheet K101C; Manufacturer's Instructions and the following:

1. Accessories:
   -- Stainless steel front and both sides.
   -- 3/4" NPT pressure regulator.
   -- Four (4) heavy-duty polyurethane swivel casters, front two (2) with locking brakes.
   -- 3/4" rear gas connection. Cap and cover manifold ends.

2. Mechanical and electrical services supplied through Utility Raceway, Item #10.

ITEM #13: CONVECTION OVEN, MOBILE

QUANTITY: One (1)
MANUFACTURER: Blodgett Oven
MODEL NO.: ZEPH-100-G DOUBLE (N058)
PERTINENT DATA: Double-Deck, Full-Size, Standard Depth
UTILITIES REQ'D: (2) 6.0A, 120V, 1PH; 3/4" Propane Gas @ 100 MBH
ALTERNATE MFRS.: None

Furnish and set-in-place per Equipment Plan, Sheet K101C; Manufacturer's Instructions and the following:

1. Natural gas-fired, pressure regulator as required. Manifold rear gas connections of each compartment to one (1) single-point connection ready for quick disconnect assembly furnished with Item #10.

2. Standard compliment of wire racks, five (5) per section.

3. Doors with dual pane thermal windows and interior light package.

4. Stainless steel front, sides, top and back panels.

5. Cord and plug.

6. 5" diameter heavy-duty polyurethane swivel casters, front two (2) with brakes.

7. Mechanical and electrical services provided thru Utility Raceway, Item #10.

NOT FOR BIDDING

ITEM #14: HEATED CABINET, MOBILE

QUANTITY: One (1)
MANUFACTURER: CresCor
MODEL NO.: H-137-UA-12D (N058)
PERTINENT DATA: Insulated, (12)18x26 Pan Capacity, Stainless Steel Construction
UTILITIES REQ'D: 1,500W, 120V, 1PH (Requires Separate 15 Amp Service)
ALTERNATE MFRS.: None

Furnish and set-in-place per Equipment Plan, Sheet K101C; Manufacturer's Instructions and the following:

1. Accessories:
   -- Full-perimeter wrap-around non-marking vinyl bumper.
   -- Polyurethane casters, two (2) with brakes.

2. Cord and plug set.

3. Electrical service provided thru Utility Raceway, Item #10.

ITEM #15: GRIDDLE, MOBILE -- (EXISTING ITEM -- TO BE RE-USED)

QUANTITY: One (1)

Relocate to position shown on Equipment Plan, Sheet K101C, Manufacturer's Instructions and furnish the following:

1. Electrical and mechanical services provided thru Utility Raceway, Item #10.

ITEM #16: FRYER ASSEMBLY, MOBILE

QUANTITY: One (1)
MANUFACTURER: Frymaster Corporation
MODEL NO.: FPP235-SC (N058)
PERTINENT DATA: Food Print PRO Filter System, 50-Pound Capacity, Full Pot, High Efficiency
UTILITIES REQ'D: 1.5A, 120V, 1PH; 8.0A, 120V, 1PH (Filter); 6.9A, 120V, 1PH (Heat Lamp); 1" Propane Gas @ 220 MBH
ALTERNATE MFRS.: None

Furnish and set-in-place per Equipment Plan, Sheet K101C; Manufacturer's Instructions and the following:

1. Stainless steel pot, door, and cabinet sides.

2. Timed-controlled automatic basket lifters.

NOT FOR BIDDING

ITEM #16: (Continued)

3. Accessories:
   - -- Two (2) #806-3068 full-pot covers.
   - -- Two (2) #210-9291 top connecting strips.
   - -- One (1) #803-0188 full-pot sediment tray.
   - -- Four (4) #803-0271 twin-size baskets.
   - -- Heavy-duty 5" diameter swivel casters, front (2) with brakes.
   - -- One (1) #SC spreader cabinet mounted on left end with #FWH-1 food warmer and holding station.

4. Mechanical and electrical services provided thru Utility Raceway, Item #10.

ITEM #17: WORTABLE

QUANTITY: Two (2)
MANUFACTURER: Custom Fabricated
MODEL NO.: #14 GA Stainless Steel
PERTINENT DATA: 6'-0" Long x 2'-6" Wide x 2'-10" High
UTILITIES REQ'D: ----
ALTERNATE MFRS.: Eagle SpecFAB; Select Stainless

Fabricate and set-in-place per Equipment Plan, Sheet K101C; Fabrication Detail, Sheet K108C and the following:

1. Re-use one (1) existing unit and relocate to position shown on Equipment Plan, Sheet K101C.

2. Perimeter edge rolls per Detail 1.02.1M.

3. Framework per Detail 1.05.

4. Legs per Detail 1.07.

5. Stainless steel undershelf per Detail 1.11.

6. One (1) stainless steel drawer assembly per Detail 1.14, Type I, with lock.

7. Worktable per Detail 2.01.

8. Sound-deaden underside of worktable with NSF-approved sound dampening material.

ITEM #18: BAG-IN-BOX RACK -- (EXISTING ITEM - TO BE RE-USED)

QUANTITY: Two (2)

Relocate to position shown on Equipment Plan, Sheet K101C and Manufacturer's Instructions.

NOT FOR BIDDING

ITEM #19: ICE MACHINE/BIN

QUANTITY: One (1)
MANUFACTURER: Manitowoc Equipment Works
MODEL NO.: IY-1196N/F-700 (N058)
PERTINENT DATA: Air-Cooled, 1,066-LB. Maker, 680-LB. Bin, Half-Dice Cube Size, Remote Condenser
UTILITIES REQ'D: 12.9A, 208V, 1PH; 1/2" CW, 1/2" IW (Maker Drain), 3/4" IW (Bin Drain)
ALTERNATE MFRS.: Ice-O-Matic; Scotsman

Furnish and set-in-place per Equipment Plan, Sheet K101C; Manufacturer's Instructions and the following:

1. Stainless steel exterior finish, ice machine and bin.

2. Accessories:
   -- One (1) Everpure #EV9324-22 InsurIce 2000 water filter system with #EV9534-26 Coarse Filter factory assembled to common wall rack.
   -- 6" high stainless steel leg set with adjustable bullet feet.
   -- One (1) #K-00347 ice deflector.
   -- Custom fabricated stainless steel ice scoop holder mounted to left-hand side of bin per Standard Detail 6.2.

3. Remote condenser provided under Item #4: Refrigeration System.

4. Cord and plug with matching receptacle furnished and installed by Electrical Contractor.

ITEM #20: HAND SINK

QUANTITY: Two (2)
MANUFACTURER: Eagle Foodservice Equipment Company
MODEL NO.: HSAN-1[illegible]-FA-LRS (N058)
PERTINENT DATA: Wall Mounted, Space Saver
UTILITIES REQ'D: 1/2" HW, 1/2" CW, 1-1/2" W
ALTERNATE MFRS.: Advance/Tabco; Select Stainless

Furnish and set-in-place per Equipment Plan, Sheet K101C; Manufacturer's Instructions and the following:

1. Complete sink assembly consisting of: gooseneck faucet, p-trap, tailpiece and basket drain.

2. Accessories:
   -- #607560 shelf assembly.
   -- Left and right end splashes.

NOT FOR BIDDING

ITEM #21: SOAP & TOWEL DISPENSER -- (EXISTING ITEM - TO BE RE-USED)

QUANTITY: Two (2)

Relocate to position shown on Equipment Plan, Sheet K101C and Manufacturer's Instructions.

ITEM #22: WORKTABLE

QUANTITY: Two (2)
MANUFACTURER: Custom Fabricated
MODEL NO.: Stainless Steel Construction, #14 GA Stainless Steel Top
PERTINENT DATA: L-Shaped: 12'-0"± x 4'-0" Long x 2'-9" Wide x 3'-6" High
UTILITIES REQ'D: ----
ALTERNATE MFRS.: None

Fabricate and set-in-place per Equipment Plan, Sheet K101C, Fabrication Detail, Sheet K108C; and the following:

1. Perimeter edge rolls per Detail 1.02.1M.

2. Framework per Detail 1.05.

3. Legs per Detail 1.07.

4. Crossbracing per Detail 1.10.

5. Cashier's utility drawer with stainless steel pull and cylinder lock.

6. Provide openings in top with plastic grommets for power cord access to receptacles mounted in wall below countertop. Cut openings in field after equipment has been set.

7. 1-⅝" diameter stainless steel footrest at cashier station.

8. Sound-deaden underside of countertop with NSF-approved sound dampening material.

ITEM #23: BOTTLED COOLER BIN, MOBILE

QUANTITY: Two (2)
MANUFACTURER: Krowne Metal Corporation
MODEL NO.: MB-1830 (N058)
PERTINENT DATA: Insulated, 30" Long x 18-1/2" Wide x 30" High, 12" Deep Bin, Stainless Steel Construction, With Casters
UTILITIES REQ'D: 1 HW
ALTERNATE MFRS.: Glastender

Furnish and set-in-place per Equipment Plan, Sheet K101C and Manufacturer's Instructions.

NOT FOR BIDDING

ITEM #24: SODA DISPENSER -- (N.I.K.E.C. – FURNISHED BY VENDOR)

QUANTITY: Two (2)

Relocate and re-use one (1) existing unit to position shown on Equipment Plan, Sheet K101C; Manufacturer's Instructions and furnish the following:

1. Accessories:
   -- One (1) Everpure #EV9275-02 QC71 Twin – MC^2 water filter system with #EV9612-56 Coarse Filter factory assembled to common wall rack.

ITEM #25: REFRIGERATED MERCHANDISER, MOBILE

QUANTITY: Two (2)
MANUFACTURER: True Food Service Equipment, Inc.
MODEL NO.: GDM-23-LD (N058)
PERTINENT DATA: One-Section, Self-Contained, With LED Lighting
UTILITIES REQ'D: 5.2A, 120V, 1PH
ALTERNATE MFRS.: Beverage-Air

Furnish and set-in-place per Equipment Plan, Sheet K101C; Manufacturer's Instructions and the following:

1. Cylinder door lock, keyed-alike.

2. Set of four (4) heavy-duty, 4" diameter poly wheel swivel-type locking casters with brakes.

3. Cord and plug set.

ITEM #26: ICE CREAM CABINET, MOBILE

QUANTITY: Two (2)
MANUFACTURER: True Food Service Equipment, Inc.
MODEL NO.: TFM-29FL (N058)
PERTINENT DATA: Flat Top With Sliding Tempered Glass Lids and Locks
UTILITIES REQ'D: 2.6A, 120V, 1PH
ALTERNATE MFRS.: Kelvinator

Furnish and set-in-place per Equipment Plan, Sheet K101C; Manufacturer's Instructions and the following:

1. Accessories:
   -- Three (3) additional hanging wire baskets, each unit; six (6) total.

2. Cord and plug set.

NOT FOR BIDDING

ITEM #27: WORKCOUNTER

QUANTITY: One (1)
MANUFACTURER: Custom Fabricated
MODEL NO.: #14 GA Stainless Steel
PERTINENT DATA: 5'-0" Long x 2'-6" Wide x 3'-0" High
UTILITIES REQ'D: ----
ALTERNATE MFRS.: None

Fabricate and set-in-place per Equipment Plan, K101C; Fabrication Detail Sheet K108C; and the following:

1. Front and end edge rolls per Detail 1.02M.

2. 6" high backsplash per Detail 1.04A. Attach to wall with fabricator-supplied z-clips.

3. Framework per Detail 1.06.

4. Heavy-duty counter legs per Detail 1.08.

5. Full-length 2-tier table-mounted stainless steel overshelf per Detail 1.12A.

6. One (1) stainless steel drawer assembly per Detail 1.14, Type I, with lock.

7. Workcounter Detail 4.01.

8. Sound-deaden underside of countertop and shelves with NSF-approved sound dampening material.

ITEM #28: WARMING DRAWER

QUANTITY: One (1)
MANUFACTURER: Hatco Corporation
MODEL NO.: HDW-2B (NSF58)
PERTINENT DATA: Fully Insulated, Stainless Steel Exterior Construction, Built-In 2-Drawers
UTILITIES REQ'D: 7.5 A, 120V, 1PH
ALTERNATE MFR.: Alto Shaam; Wittco

Furnish and set-in-place per Equipment Plan, Sheet K101C, Manufacturer's Instructions and the following:

1. Accessories
   -- #HDW-1TC-2 digital temperature control with LED display, each drawer.

2. Cord and plug set.

NOT FOR BIDDING

ITEM #29: REFRIGERATED SANDWICH UNIT -- (EXISTING ITEM - TO BE RE-USED)

QUANTITY: One (1)

Relocate to position shown on Equipment Plan, Sheet K101C and Manufacturer's Instructions.

ITEM #30: HEATED MERCHANDISER

QUANTITY: Two (2)
MANUFACTURER: Hatco Corporation
MODEL NO.: FDWD-1 (N058)
PERTINENT DATA: With Interior Revolving Circular Rack & Motor, Single Service, Countertop, Humidified
UTILITIES REQ'D: 11.6A, 120V, 1PH
ALTERNATE MFRS.: None

Furnish and set-in-place per Equipment Plan, Sheet K101C; Manufacturer's Instructions and the following:

1. Accessories:
   -- #FDWD-LEGS 4" adjustable legs.
   -- #FDW4SMP 4-shelf multi-purpose rack.

2. Cord and plug set.

ITEM #31: HOT DOG GRILL -- (EXISTING ITEM - TO BE RE-USED)

QUANTITY: One (1)

Relocate to position shown on Equipment Plan, Sheet K101C and Manufacturer's Instructions.

ITEM #32: WORKTOP FREEZER, MOBILE -- (EXISTING ITEM - TO BE RE-USED)

QUANTITY: One (1)

Relocate to position shown on Equipment Plan, Sheet K101C and Manufacturer's Instructions.

ITEM #33: FOOD WARMER

QUANTITY: Two (2)
MANUFACTURER: APW Wyott Foodservice Equipment Co.
MODEL NO.: RCW-11SP (N058)
PERTINENT DATA: Countertop, 11-Qt Capacity, Stainless Steel
UTILITIES REQ'D: 10.0A, 120V, PH
ALTERNATE MFRS.: None

NOT FOR BIDDING

ITEM #33: (Continued)

Furnish and set-in-place per Equipment Plan, Sheet K101C; Manufacturer's Instructions and the following:

1. Package unit to consist of one (1) each: 11-Quart insert, hinged cover and 4oz. ladle.

2. Cord and plug set.

ITEM #34: POT & PAN SHELVING, MOBILE

QUANTITY: Two (2)
MANUFACTURER: InterMetro Industries Corporation
MODEL NO.: Super Erecta (N058)
PERTINENT DATA: Four-Tier High, Stainless Steel, Louvered/Embossed
UTILITIES REQ'D: ----
ALTERNATE MFRS.: None

Furnish and set-in-place per Equipment Plan, Sheet K101C; Manufacturer's Instructions and the following:

1. Two (2) #2448LS section; 24" W x 48" L x 4-tier high.

2. Eight (8) #63UPS stainless posts for stem casters, 63" high.

3. Four (4) #5MP polyurethane swivel casters with donut bumpers.

4. Four (4) #5MPB polyurethane swivel casters with brakes and donut bumpers.

5. Plastic split sleeves, quantity as required.

6. Locate bottom shelf @ 12" A.F.F.; space remaining shelves equally.

ITEM #35: CASH REGISTER -- (N.I.C. – FURNISHED BY OWNER)

QUANTITY: Two (2)

ITEM #36: UTILITY CART, MOBILE

QUANTITY: Two (2)
MANUFACTURER: Lakeside Manufacturing Company
MODEL NO.: 344 (N058)
PERTINENT DATA: 700-lb. Capacity, Three-Shelf, N.S.F. Model
UTILITIES REQ'D: ----
ALTERNATE MFRS.: Piper Products

NOT FOR BIDDING

ITEM #36: (Continued)

Furnish and set-in-place per Equipment Plan, Sheet K101C; Manufacturer's Instructions and the following:

1. All four (4) casters swivel-type, in lieu of two (2) swivel, two (2) fixed.

ITEM #37: LOCKERS -- (N.I.C. – FURNISHED BY OWNER)

QUANTITY: Two (2)

ITEM #38: SLICER -- (EXISTING ITEM - TO BE RE-USED)

QUANTITY: One (1)

Relocate to position shown on Equipment Plan, Sheet K101C and Manufacturer's Instructions.

ITEM #39: POT WASHING SINK -- (EXISTING ITEM - TO BE RE-USED)

QUANTITY: One (1)

Relocate to position shown on Equipment Plan, Sheet K101C; Manufacturer's Instructions and furnish the following:

1. Re-attach unit to existing building wall. Caulk and seal to wall with clear silicone sealant as required.

2. Replace existing faucets with two (2) T&S #B-0290 backsplash mounted swing spout faucets.

ITEM #40: DUNNAGE RACK -- (EXISTING ITEM - TO BE RE-USED)

QUANTITY: Two (2)

Relocate to position shown on Equipment Plan, Sheet K101C and Manufacturer's Instructions.

(END OF FOODSERVICE ITEMIZED SPECIFICATIONS)

NOT FOR BIDDING

STANDARD DETAILS

NOT FOR BIDDING

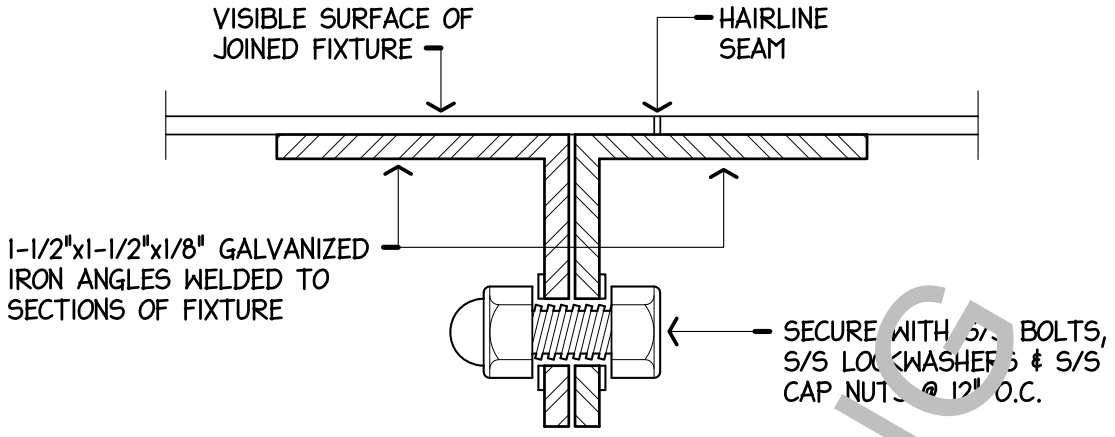

NOTE! JOINED SECTIONS SHALL BE DRAWN TOGETHER LEAVING ONLY A HAIRLINE SEAM.

A. BOLT DRAWN JOINT

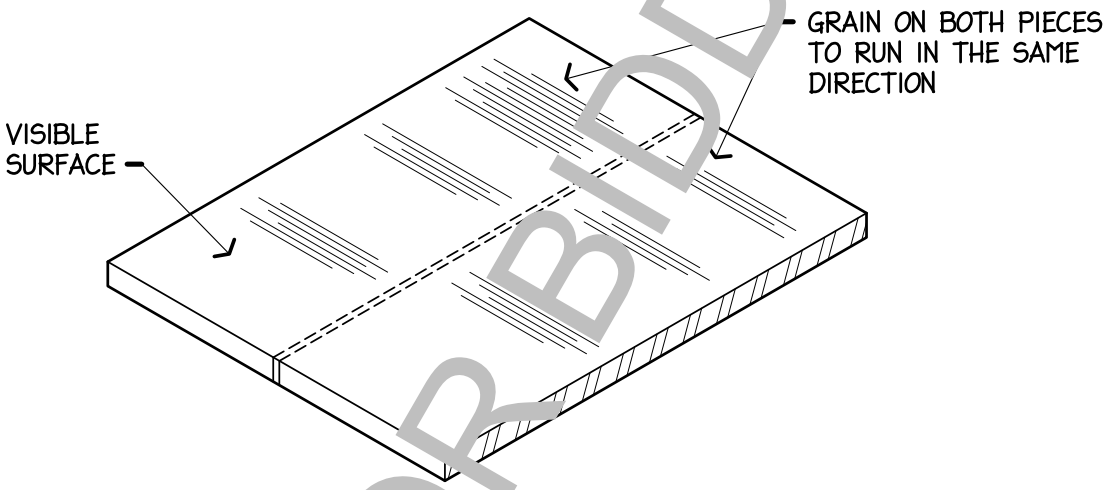

NOTE! ON FIXTURES SPECIFIED WITH WELDED FIELD JOINTS, WELDS SHALL BE CONTINUOUS, GROUND & POLISHED LEAVING NO VISIBLE EVIDENCE OF WELD.

B. WELDED BUTT JOINT

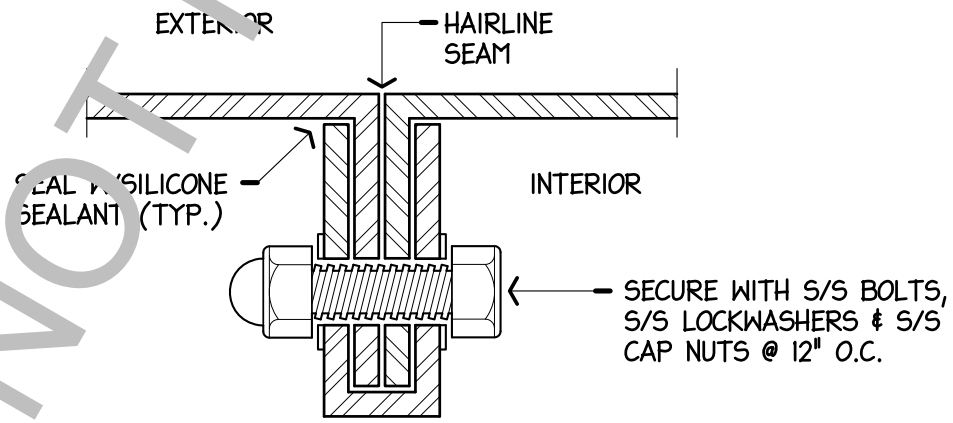

NOTE! JOINED SECTIONS SHALL BE DRAWN TOGETHER LEAVING ONLY A HAIRLINE SEAM.

C. RAISED CAP SEAM - KNUCKLE JOINT

NOT FOR BIDDING

NYIKOS ASSOCIATES, INC. Food Facilities Design/Consulting	DESCRIPTION: FIELD JOINTS & ASSEMBLY	STANDARD DTL: 1.01 PAGE: 114000-52

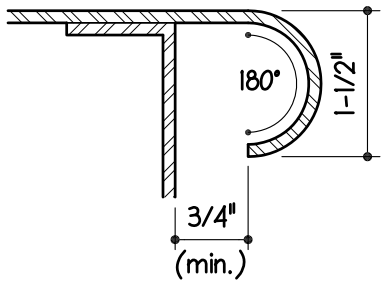

ROLLED A.

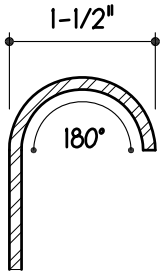

RAISED ROLLED B.

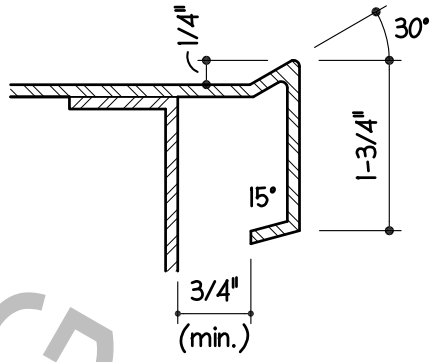

INVERTED "V" EDGE C.

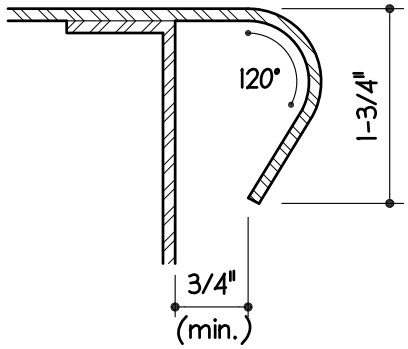

BULL NOSE ROLLED D.

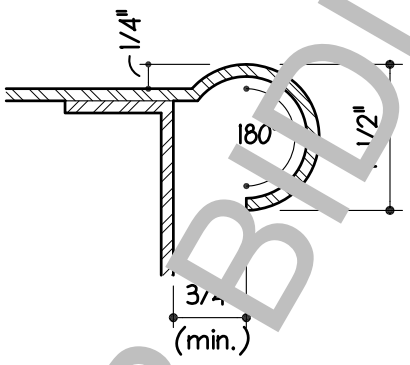

MARINE EDGE E.

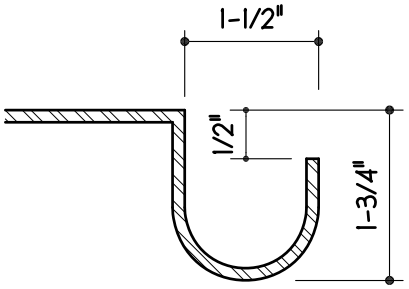

FLOUR GUTTER F.

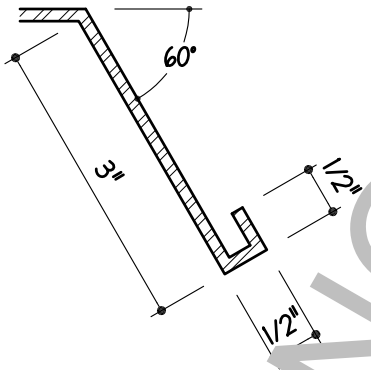

RECIPE CARD HOLDER G.

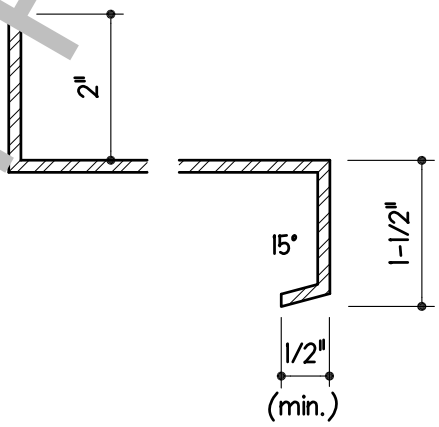

UNDERSHELF EDGE H.

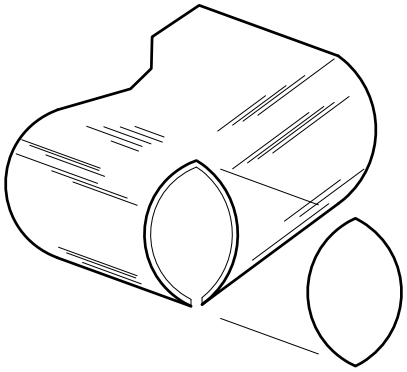

BULL NOSE CORNER I.

NOT FOR BIDDING

NYIKOS ASSOCIATES, INC. Food Facilities Design/Consulting	DESCRIPTION: EDGES	STANDARD DTL: 1.02 PAGE: 114000-53

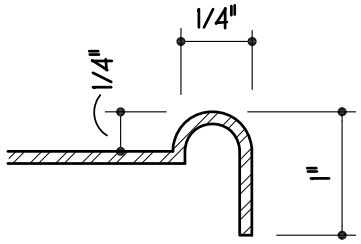

RAISED OPENING EDGE J.

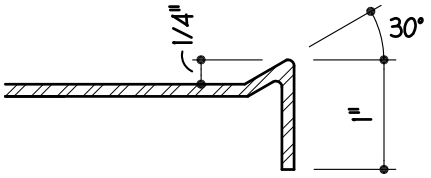

RAISED OPENING EDGE K.

a. AS SPECIFIED. TO MATCH ADJACENT ROLLED EDGES

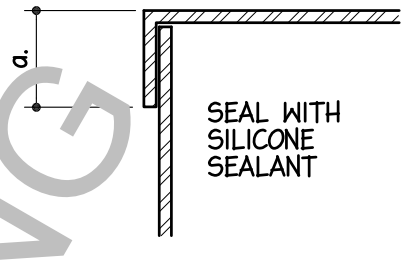

STRAIGHT TURN DOWN L.

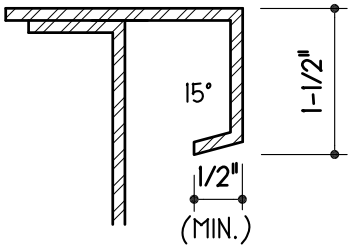

TURNED DOWN EDGE M.

NOT FOR BIDDING

NYIKOS ASSOCIATES, INC.
Food Facilities Design/Consulting

DESCRIPTION: EDGES

STANDARD DTL: 1.02.1

PAGE: 114000-54

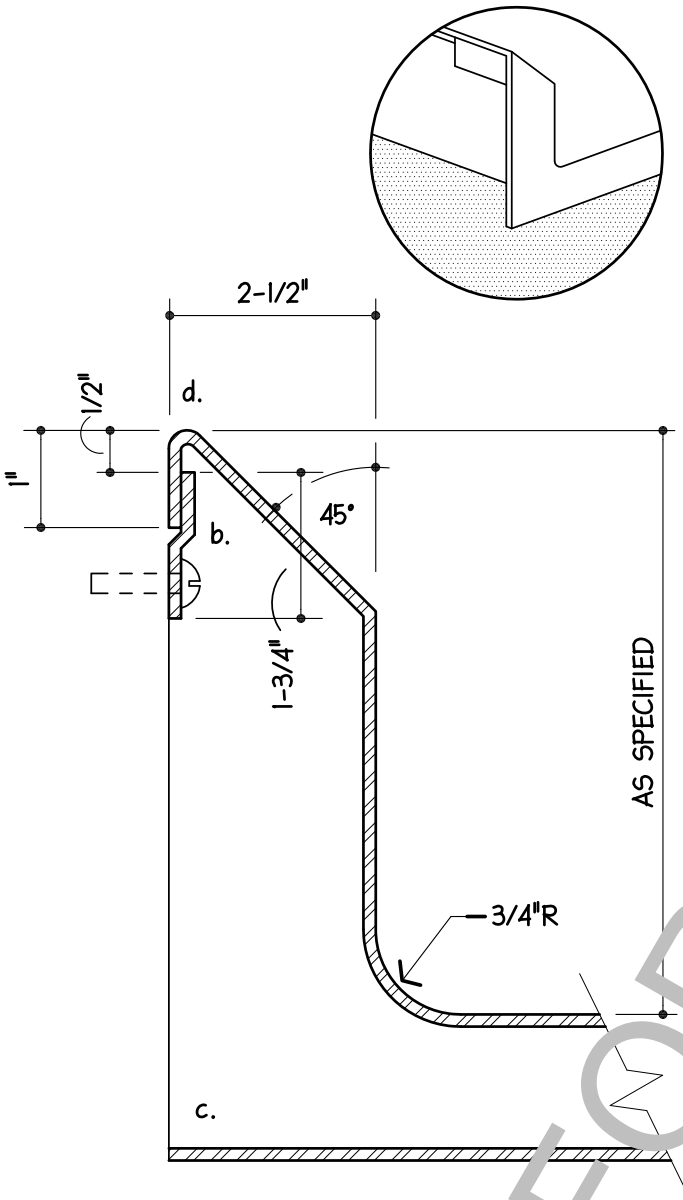

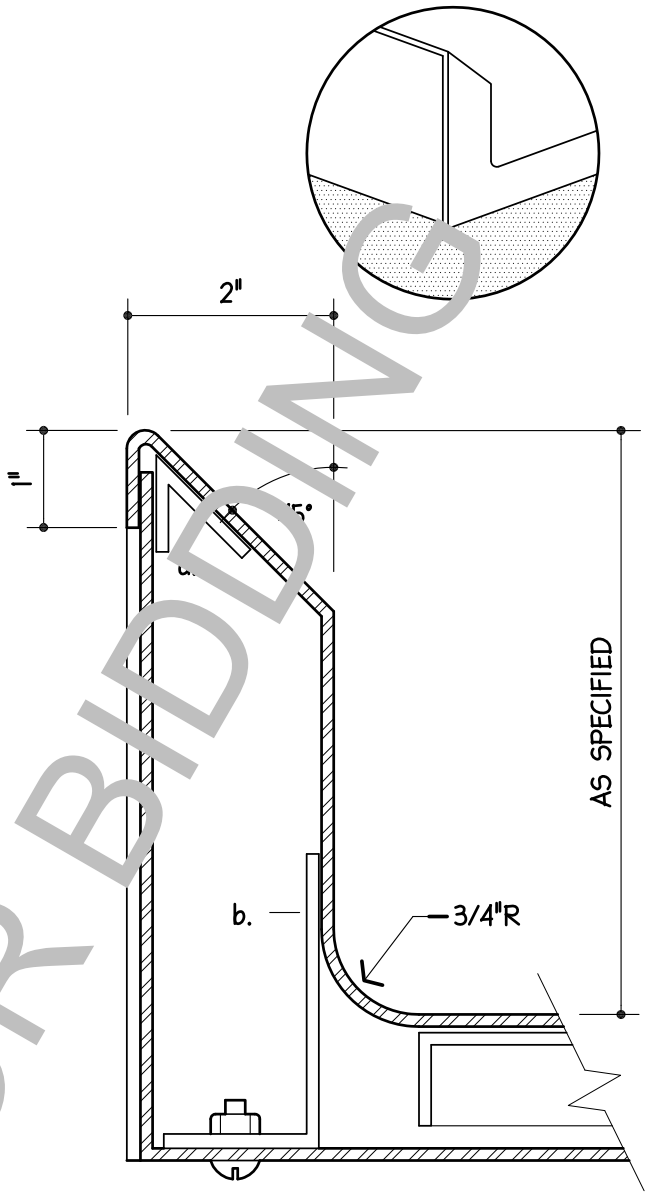

WALL UNIT

DETAIL A

a. 2-1/2" AT SINK TO ALLOW FOR CONNECTED OVERFLOW

b. 12 GA. S/S CLIPS, 4" LONG, FASTENED TO EACH WALL END OF EACH UNIT & 4'-0" ON CENTER. SECURE TO WALL W/A MINIMUM OF TWO 1/4"x20 S/S TOGGLE BOLTS OR EXPANSION SHIELDS.

c. EXPOSED ENDS TO BE FULLY WELDED CLOSED.

d. SEAL ALL AROUND TO WALL WITH SILICONE SEALANT.

FREE STANDING UNIT

DETAIL B

a. 1"x1"x14 GA. S/S x1-1/2"LONG RETAINING CLIP WELDED IN PLACE. ONE AT EACH END OF UNIT AND 12" ON CENTER.

b. 2-1/2"x1-1/2x1-1/2" 14 GA.S/S CLIP WELDED TO SPLASH. ONE AT OF EACH UNIT & 12" ON CENTER.

c. 14 GA S/S PANEL SECURED TO CLIPS W/ S/S OVALHEAD BOLT. WELD NUT TO CLIP.

d. EXPOSED ENDS TO BE FULLY WELDED.

NOT FOR BIDDING

NYIKOS ASSOCIATES, INC. Food Facilities Design/Consulting	DESCRIPTION: BACKSPLASHES	STANDARD DTL: 1.04 PAGE: 114000-55

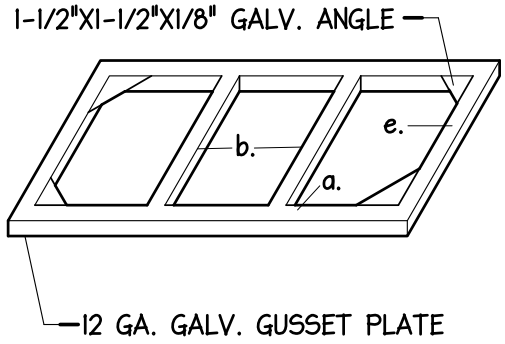

TABLES

A.

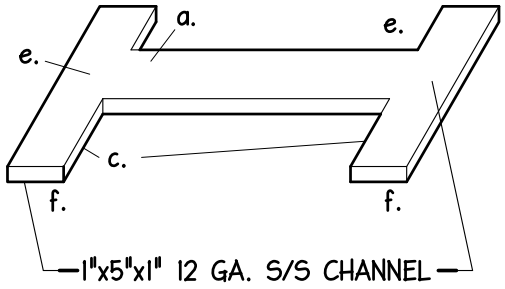

DISHTABLES

B.

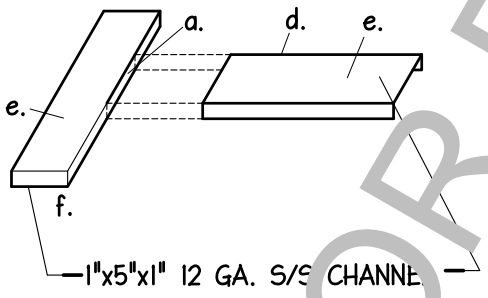

SINK DRAINBOARDS

C.

a. FULLY WELDED CONSTRUCTION.

b. ANGLE LOCATION - ENDS, SIDES OF TOP INSETS; INTERMEDIATES 24" ON CENTER.

c. CHANNEL LOCATION - ENDS AND INTERMEDIATE MAXIMUM 6'-6" O.C.

d. ADD CENTER CHANNEL WHEN DRAINBOARD LENGHT EXCEEDS 5'-6".

e. SECURE [illegible] TO FRAMEWORK WITH WELDED STUDS, S/S LOCKWASHERS AND CAP NUTS.

f. CLOSE CHANNEL AT FRONT ONLY.

NOT FOR BIDDING

NYIKOS ASSOCIATES, INC. Food Facilities Design/Consulting	DESCRIPTION: TABLE & DRAINBOARD FRAMEWORK	STANDARD DTL: 1.05 PAGE: 114000-56

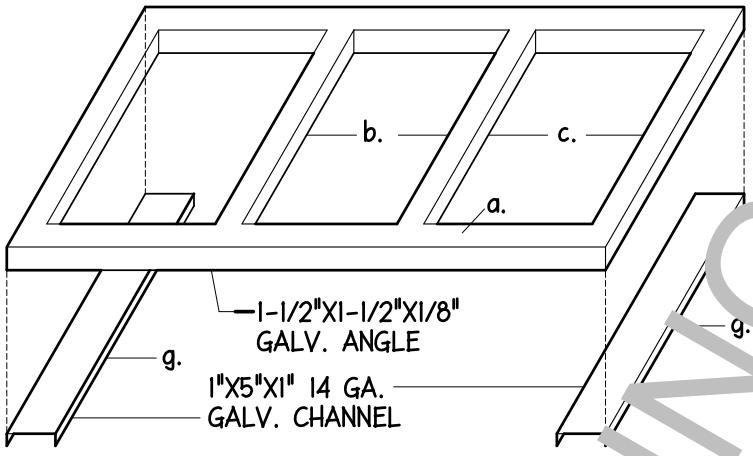

FRAME FOR STRUCTURALLY FORMED CABINET BODY

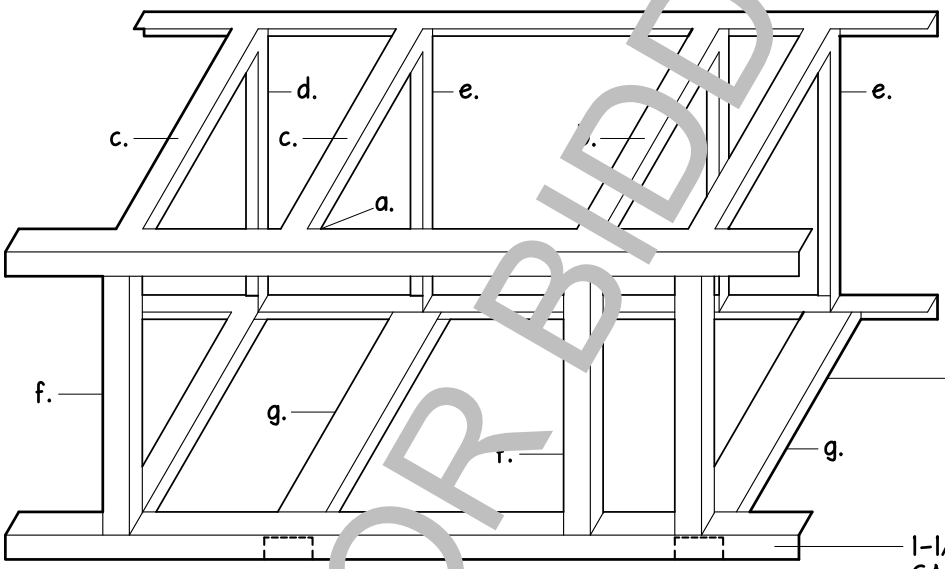

BOX FRAME FOR PANEL CABINET BODY

a. FULLY WELDED CONSTRUCTION.

b. SECURE TOP TO FRAMEWORK WITH WELDED STUDS, S/S LOCKWASHERS, AND CAP UNITS. MAXIMUM 15" ON CENTER.

c. TOP ANGLE LOCATION - ENDS; SIDES OF TOP INSETS; UNDER HEAVY EQUIPMENT LEGS; INTERMEDIATES 24" ON CENTER.

d. BACK ANGLE LOCATION - ENDS; INTERMEDIATE MAXIMUM 5'-6" ON CENTER.

e. CAFETERIA FRONT ANGLE (CHANNEL) LOCATION - ENDS; INTERMEDIATES TO CORRESPOND TO PILASTERS, SLIDE BRACKETS, PANEL SPACING, MAXIMUM 4'-0" ON CENTER. RE: STDS 4.01 THRU 4.04.

f. WORK SIDE ANGLE LOCATION - ENDS; SIDE OF OPENINGS; INTERMEDIATES MAXIMUM 5'-6" ON CENTER.

g. BOTTOM LEG CHANNEL LOCATION - ENDS; INTERMEDIATES CORRESPOND TO FRONT PANEL SPACING; PILASTERS, SLIDE BRACKETS. MAXIMUM 5'-6" ON CENTER.

NOT FOR BIDDING

NYIKOS ASSOCIATES, INC. Food Facilities Design/Consulting	DESCRIPTION: COUNTER FRAMEWORK	STANDARD DTL: 1.06 PAGE: 114000-57

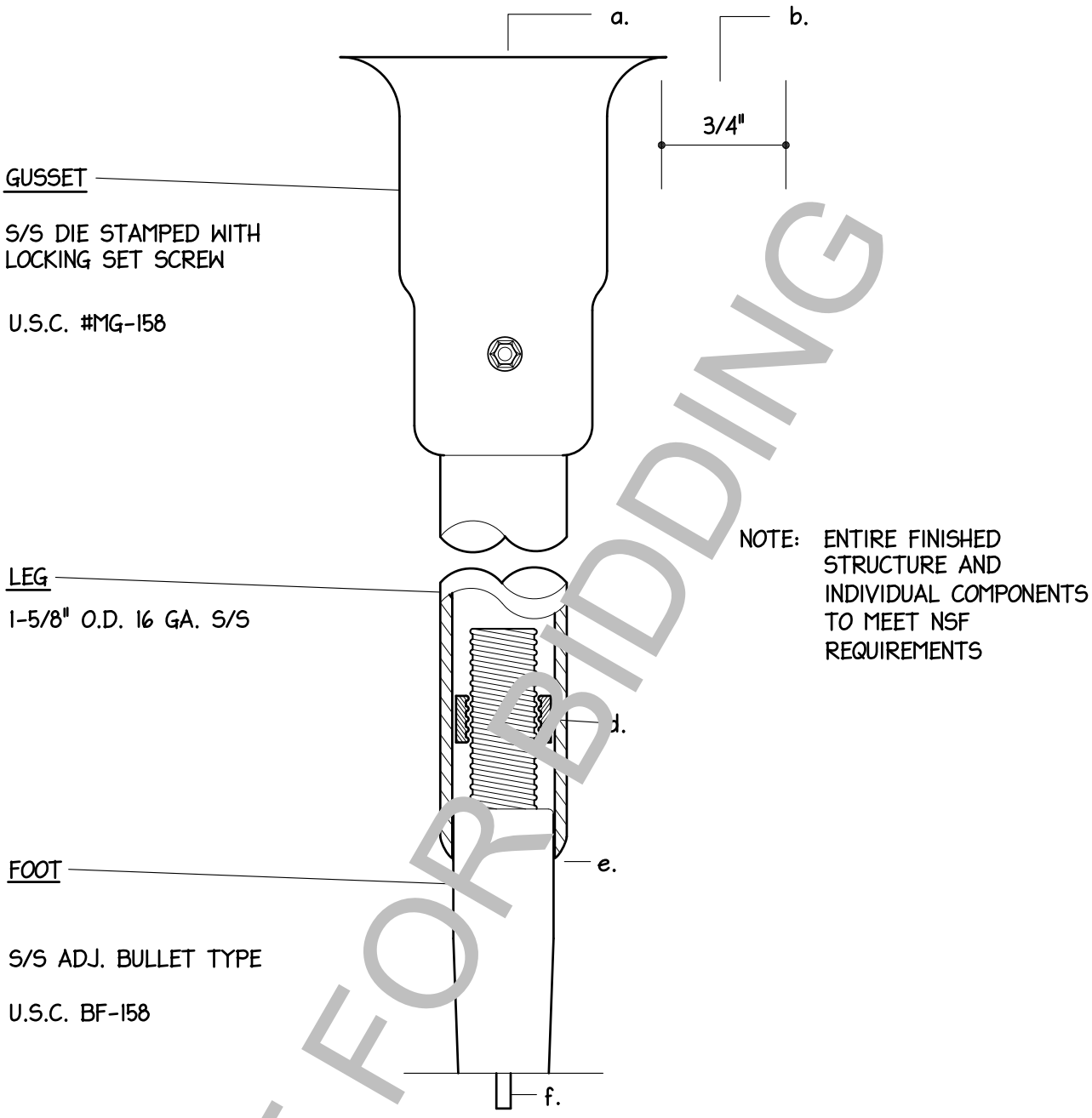

NOT FOR BIDDING

a. FULLY WELD GUSSET TO FRAMEWORK OR SINK

b. 3/4" MINIMUM CLEARANCE ALL AROUND

c. SET SCREW NOT VISIBLE TO WORKING SIDE OF EQUIPMENT.

d. MAXIMUM 1/2" CLEARANCE BETWEEN LEG AND FOOT

e. FOOT SET AT MIDPOINT TO ALLOW 1" ADJUSTMENT UP AND 1" DOWN. WITHOUT THREAD EXPOSURE.

f. LEGS UNSUPPORTED LATERALLY BY CROSSBACKING OR UNDERSHELVES SHALL BE PINNED TO FLOOR USING 1/4" DIA. X 1/2" PINS WELDED TO FOOT AND SET IN MATCHING HOLES IN THE FLOOR.

NYIKOS ASSOCIATES, INC. Food Facilities Design/Consulting	DESCRIPTION: TABLE & SINK LEGS	STANDARD DTL: 1.07 PAGE: 114000-58

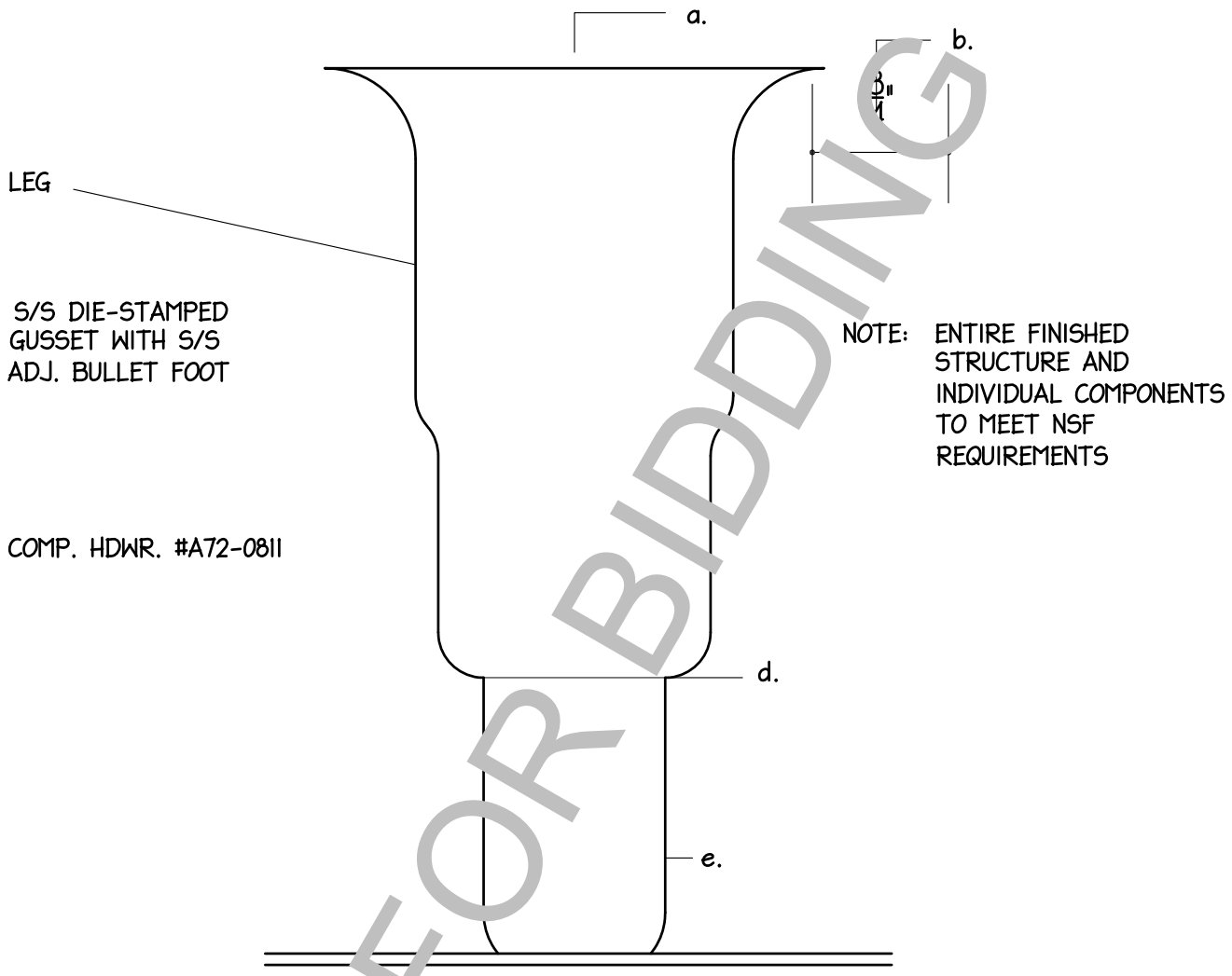

a. FULLY WELD TO FRAMEWORK CHANNEL

b. 3/4" MINIMUM CLEARANCE ALL AROUND

d. MAXIMUM 1/32" CLEARANCE BETWEEN LEG AND FOOT

e. FOOT SET AT MIDPOINT TO ALLOW 1" ADJUSTMENT UP AND 1" DOWN. WITHOUT THREAD EXPOSURE.

NOT FOR BIDDING

NYIKOS ASSOCIATES, INC. Food Facilities Design/Consulting	DESCRIPTION: COUNTER LEGS	STANDARD DTL: 1.08
		PAGE: 114000-59

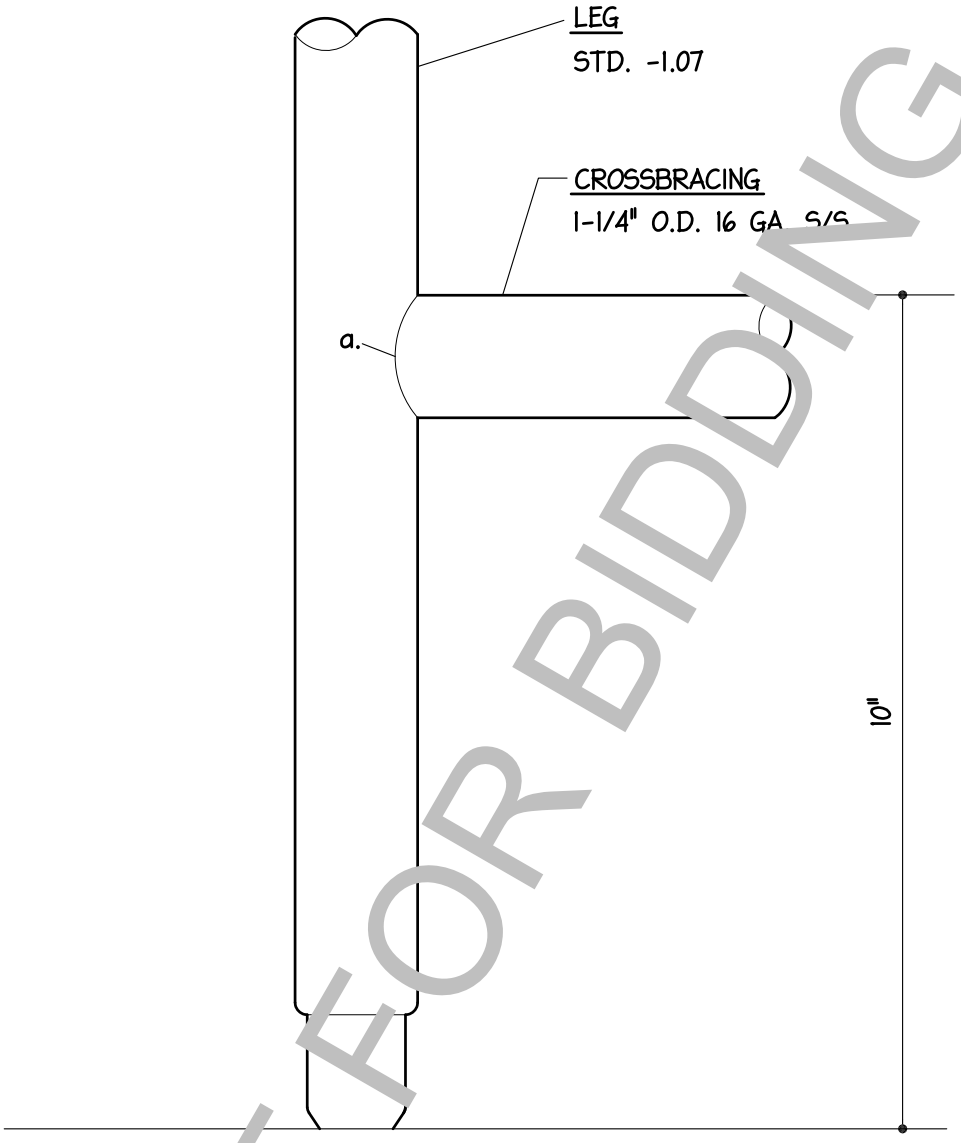

a. FULLY WELD, GRIND SMOOTH AND POLISH.

NOT FOR BIDDING

NYIKOS ASSOCIATES, INC. Food Facilities Design/Consulting	DESCRIPTION: CROSSBRACING	STANDARD DTL: 1.10 PAGE: 114000-60

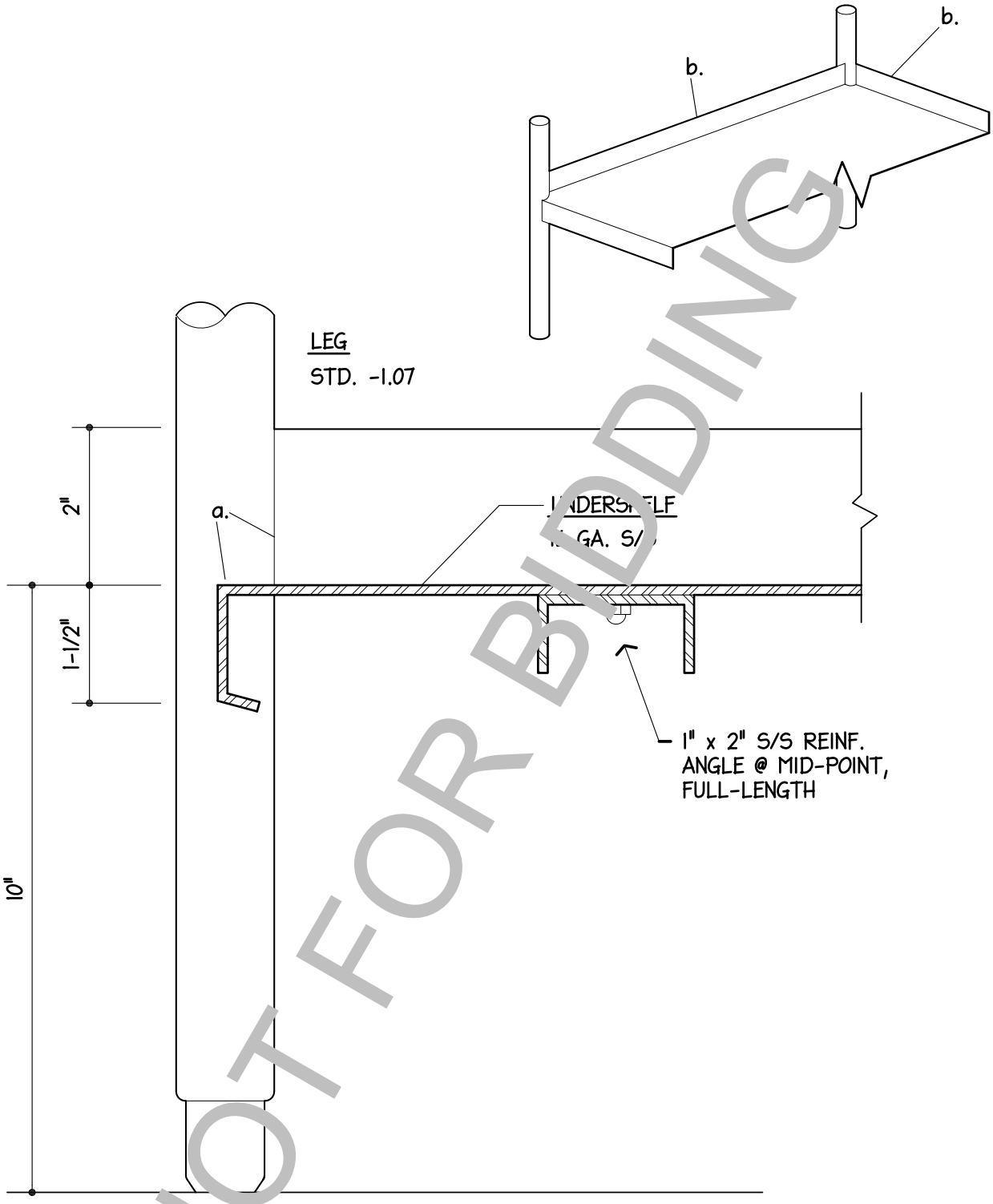

NOT FOR BIDDING

a. FULLY WELD, GRIND SMOOTH AND POLISH.

b. WHEN SPECIFIED, TURN REAR AND ENDS UP 2".

NYIKOS ASSOCIATES, INC. Food Facilities Design/Consulting	DESCRIPTION: UNDERSHELF	STANDARD DTL: 1.11
		PAGE: 114000-61

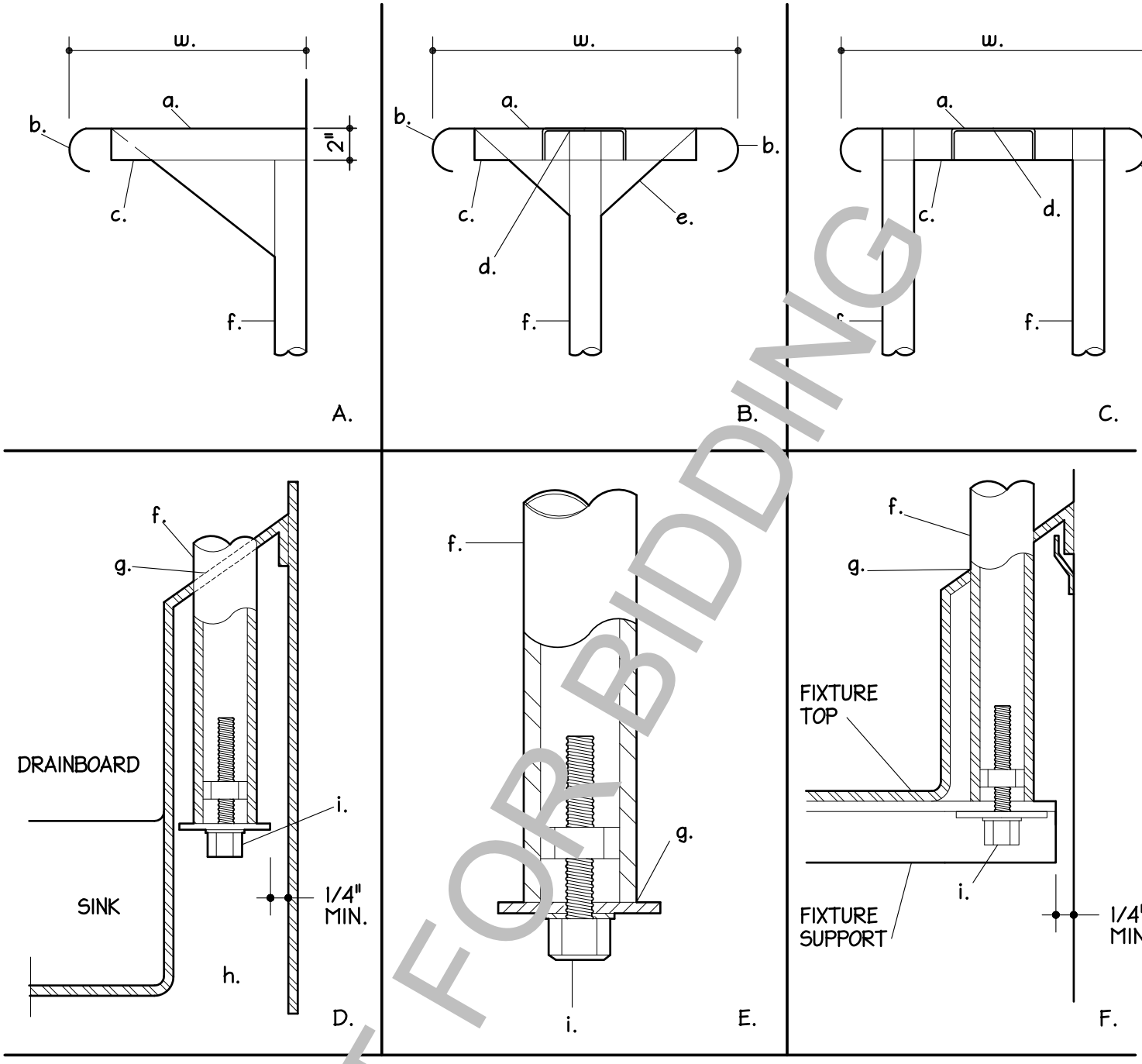

NOT FOR BIDDING

a. 16 GA S/S SHELF
b. STD.- 1.02 EDGE
c. 1"x 3"x 14 GA. S/S CROSS CHANEL
d. 1'x 3"x 14 GA. S/S LENGTHWISE CHANNEL WHEN LENGTH BETWEEN SUPPORTS EXCEEDS 42"
e. 14 GA. S/S BRACKETS FULLY WELDED TO SUPPORT AND CHANNEL..
f. 1-1/4" O.D. GA. S/S UPRIGHT. MAXIMUM 5'-0" ON CENTER.
g. TIGHT FIT. SEAL WITH SILICONE SEALANT.
h. 1-1/2"x 1-1/2" 12 GA. S/S CLIPS WELDED TO REAR OF SPLASH AT DRAINBOARD HEIGHT.
i. 3/8"x 16 S.S. HEX HEAD BOLT, S/S NUT & S/S LOCKWASHER. NUT WELDED IN TUBE.
w. WIDTH AS SPECIFIED.

NYIKOS ASSOCIATES, INC. Food Facilities Design/Consulting	DESCRIPTION: **OVERSHELVES & SUPPORTS**	STANDARD DTL: **1.12** PAGE: **114000-62**

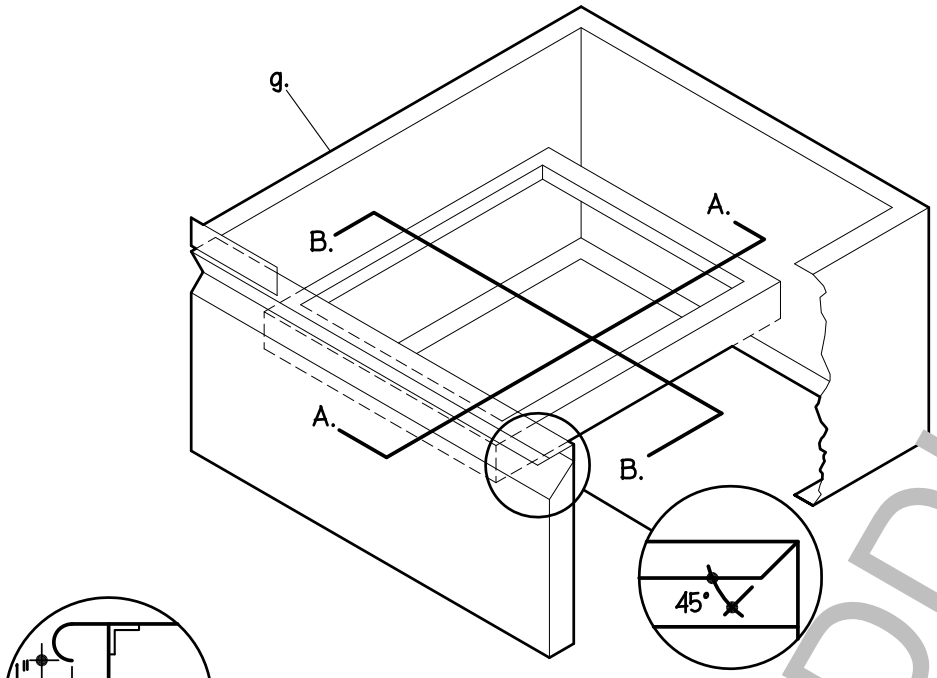

e. 16 GA. S/S ALL WELDED.

f. 3 PIECE SELF CLOSING DWR. SLIDE AS MFD. BY COMPONENT HARDWARE, S52 SERIES WITH S/S ROLLER BEARINGS. PITCH SLIDE DOWNWARD 3/8" PER FOOT FOR SELF-CLOSING ACTION.

g. 18 GA. S/S DWR. ENCLOSURE. ALL WELDED.

h. SEMI - RIGID FIBERGLASS SOUND DAMPENING.

j. HARD RUBBER DRAWER BUMPER EACH CORNER.

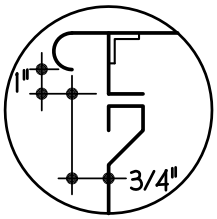

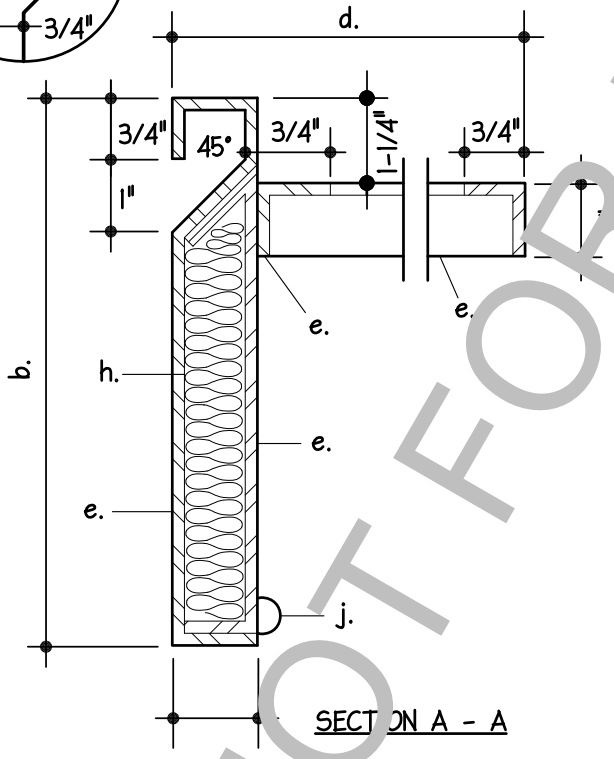

SECTION A - A

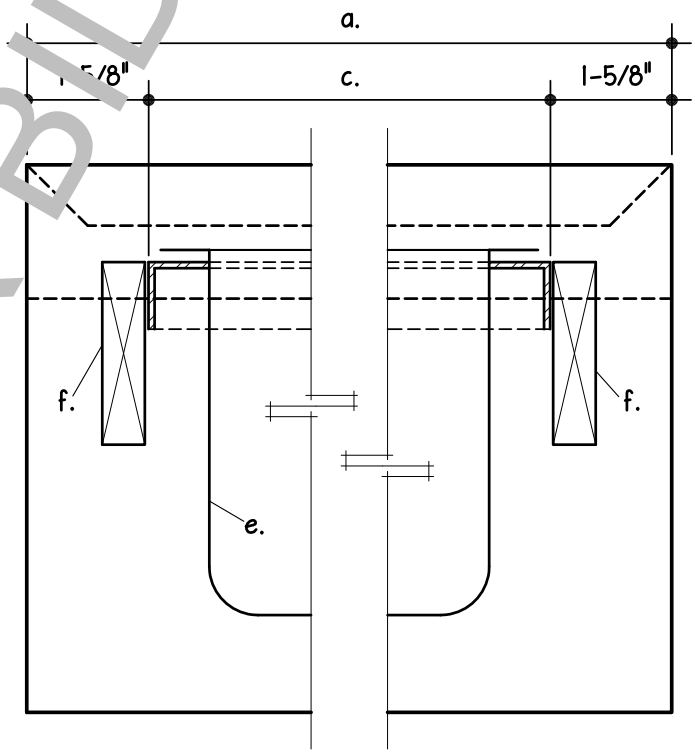

SECTION B -B

i. PROVIDE DIE - STAMPED #18 GA. S/S DWR. PANS AS FOLLOWS:

TYPE	NO.	PANS	a.	b.	c.	d.
I	1	20x20x5 DP.	25	7-1/2	21-3/4	22-3/4
II	1	20x20x8 DP.	25	10-1/2	21-3/4	22-3/4
III	1	12x20x4 DP.	25	6-1/2	21-3/4	14-1/2
IV	2	12x20x4 DP.	28	6-1/2	26-1/4	22-1/2
V	1	12x20x4 DP.	17	13-1/2	13-1/2	22-1/2

NOT FOR BIDDING

NYIKOS ASSOCIATES, INC. Food Facilities Design/Consulting	DESCRIPTION: DRAWERS	STANDARD DTL: 1.14 PAGE: 114000-63

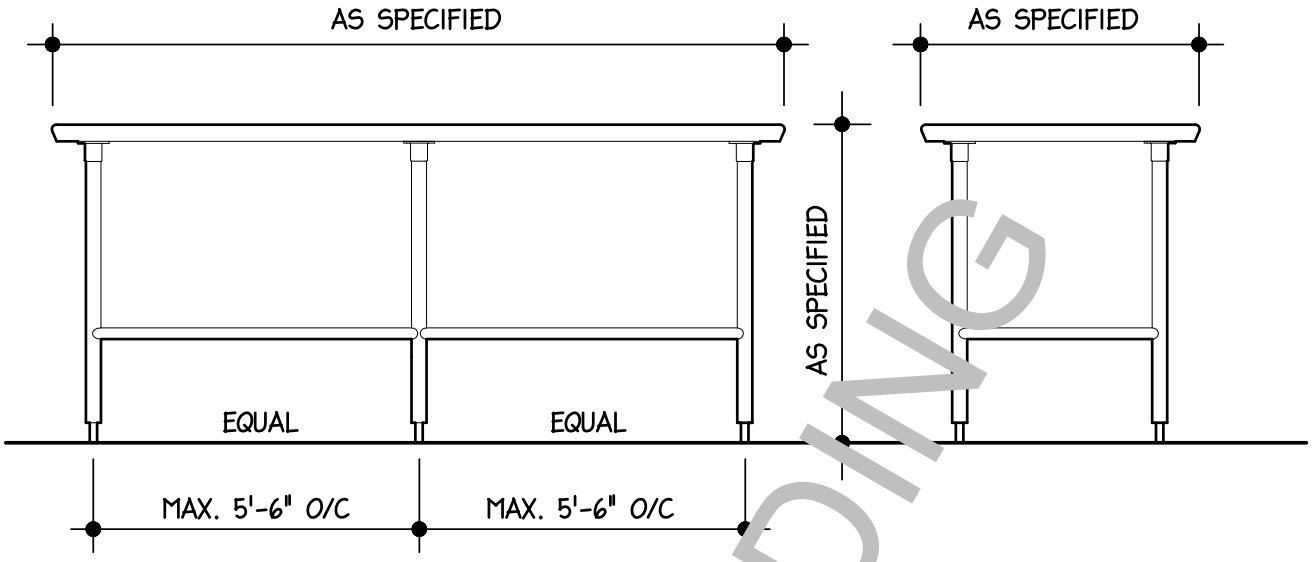

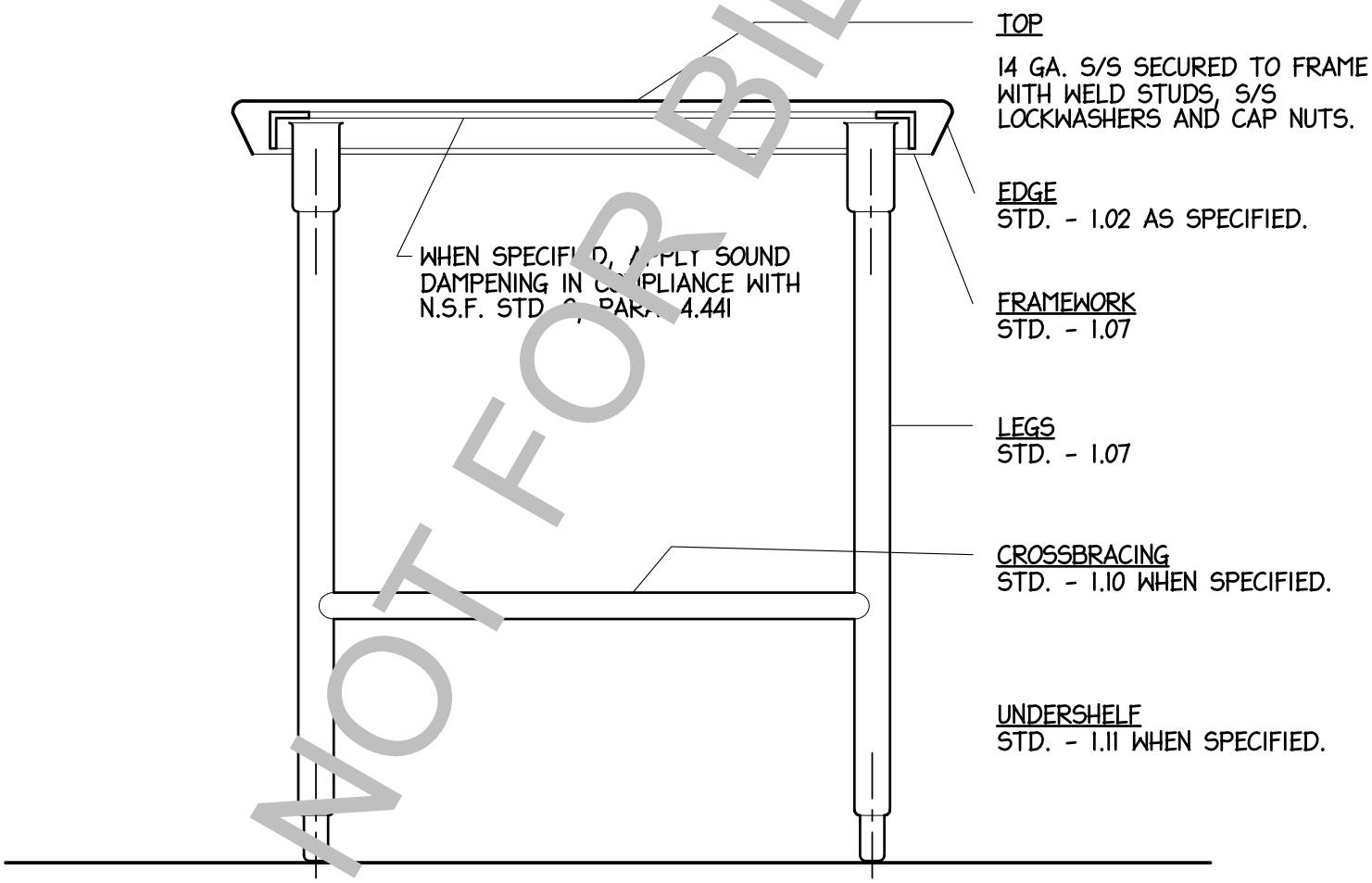

NOT FOR BIDDING

NYIKOS ASSOCIATES, INC. Food Facilities Design/Consulting	DESCRIPTION: WORKTABLE	STANDARD DTL: 2.01 PAGE: 114000-64

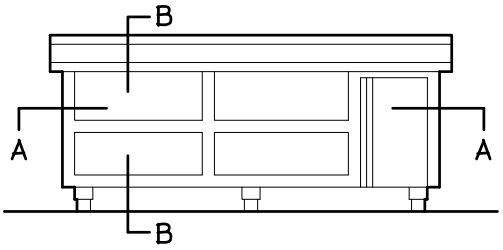

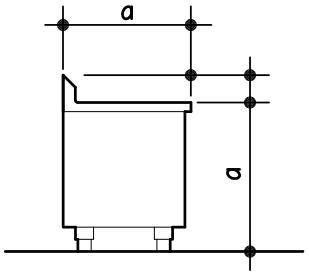

a. AS SPECIFIED

b. SEAL WITH SILICONE SEALANT

c. TIGHT JOINT. CLOSED BOTTOM.

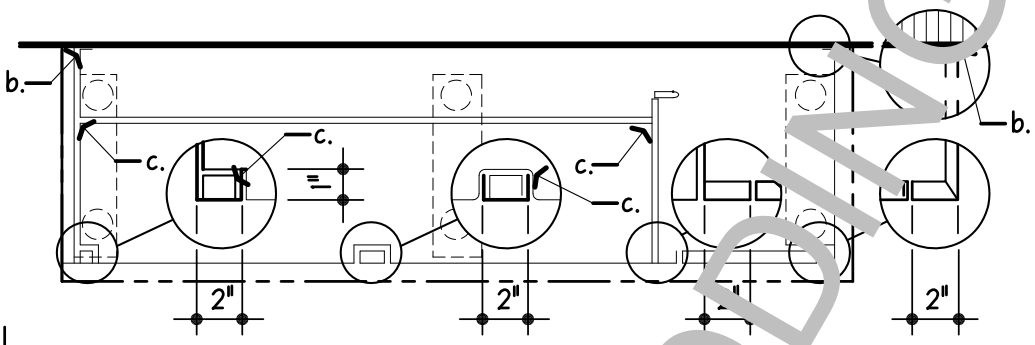

SECTION A-A

NOTE!: POP RIVETS & EXPOSED STUDS & CAP NUTS NOT ACCEPTABLE.

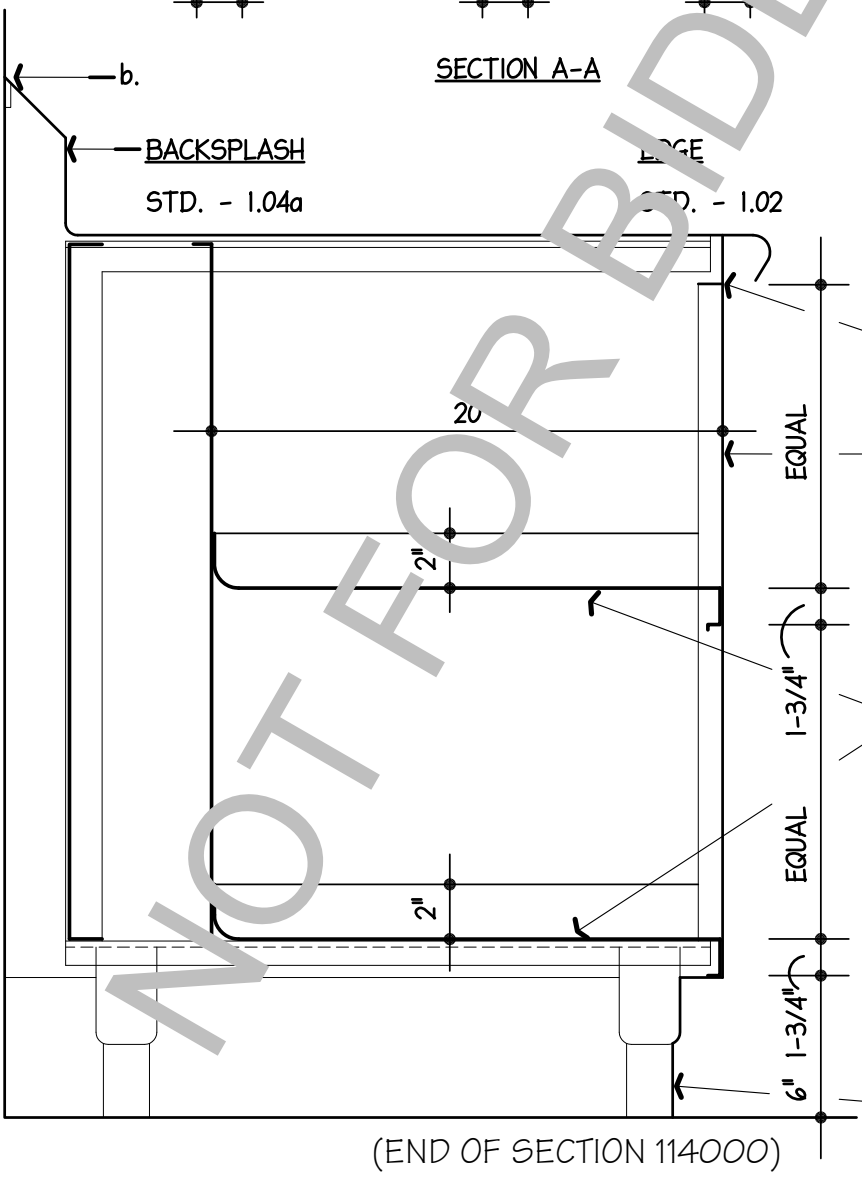

SECTION B-B

TOP

14 GA. S/S SECURED TO FRAMEWORK WITH WELDED STUDS, S/S L.W. AND CAP NUTS.

FRAMEWORK

STD. - 1.06

BODY

18 GA. S/S WITH INTEGRALLY FORMED STRUCTURAL ANGLES AND CHANNELS TACK WELDED.

SHELVES

16 GA. S/S SECURED TO LINER WITH TACK WELLS 1/2" LONG, 12" O/C.

DOOR

STD. - 4.25
- 4.26
- 4.27
- 4.28

LEGS

STD. - 1.08

(END OF SECTION 114000)

NOT FOR BIDDING

NYIKOS ASSOCIATES, INC. Food Facilities Design/Consulting	DESCRIPTION: BACK COUNTER	STANDARD DTL: 4.01 PAGE: 114000-65

SECTION 123661 - SIMULATED STONE COUNTERTOPS

PART 1 - GENERAL

1.1 RELATED DOCUMENTS

A. Drawings and general provisions of the Contract, including General and Supplementary Conditions and Division 01 Specification Sections, apply to this section.

1.2 SUMMARY

A. Section Includes:

1. Solid-surface-material countertops and backsplashes.

1.3 ACTION SUBMITTALS

A. Product Data: For countertop materials and sinks.

B. Shop Drawings: For countertops. Show materials, finishes, edge and backsplash profiles, methods of joining, and cutouts for plumbing fixtures.

C. Samples for Initial Selection: For each type of material exposed to view.

D. Samples for Verification: For the following products:

1. Countertop material, 6 inches (150 mm) square.

1.4 PROJECT CONDITIONS

A. Field Measurements: Verify dimensions of countertops by field measurements after base cabinets are installed but before countertop fabrication is complete.

1.5 COORDINATION

A. Coordinate locations of utilities that will penetrate countertops or backsplashes.

PART 2 - PRODUCTS

2.1 SOLID-SURFACE-MATERIAL COUNTERTOPS

A. Configuration: Provide countertops with the following front and backsplash style:

NOT FOR BIDDING

1. Front: Straight, slightly eased at top.
2. Backsplash: Straight, slightly eased at corner.
3. Endsplash: Matching backsplash.

B. Countertops: 3/4-inch- (19-mm-) thick, solid surface material with front edge built up with same material.

C. Backsplashes: 3/4-inch- (19-mm-) thick, solid surface material.

D. Fabrication: Fabricate tops in one piece with shop-applied edges and backsplashes unless otherwise indicated. Comply with solid-surface-material manufacturer's written instructions for adhesives, sealers, fabrication, and finishing.

1. Fabricate with loose backsplashes for field assembly.
2. Install integral sink bowls in countertops in the shop.

2.2 COUNTERTOP MATERIALS

A. Adhesives: Adhesives shall not contain urea formaldehyde.

B. Solid Surface Material: Homogeneous solid sheets of filled plastic resin complying with ANSI SS1.

1. Manufacturers: Subject to compliance with requirements, available manufacturers offering products that may be incorporated into the Work include, but are not limited to, the following:

a. Avonite Surfaces.
b. E. I. du Pont de Nemours and Company.
c. Formica Corporation.
d. LG Chemical, Ltd.
e. Meganite Inc.
f. Samsung Chemical USA, Inc.
g. Swan Corporation (The).
h. Transolid, Inc.
i. Wilsonart International.

2. Type: Provide Standard Type unless Special Purpose Type is indicated.
3. Integral Sink Bowls: Comply with ISSFA-2 and ANSI Z124.3, Type 5 or Type 6, without a precoated finish.
a. Shape: Oval
b. Size: 16” x 13” min.
c. Overflow: rear

4. Colors and Patterns: As selected by Architect from manufacturer's full range.

NOT FOR BIDDING

PART 3 - EXECUTION

3.1 INSTALLATION

A. Install countertops level to a tolerance of 1/8 inch in 8 feet (3 mm in 2.4 m).

B. Fasten countertops by screwing through corner blocks of base units into underside of countertop. Pre-drill holes for screws as recommended by manufacturer. Align adjacent surfaces and, using adhesive in color to match countertop, form seams to comply with manufacturer's written instructions. Carefully dress joints smooth, remove surface scratches, and clean entire surface.

1. Install backsplashes and endsplashes to comply with manufacturer's written instructions for adhesives, sealers, fabrication, and finishing.
2. Seal edges of cutouts in particleboard subtops by saturating with varnish.

END OF SECTION 123661

NOT FOR BIDDING

(PAGE LEFT BLANK)

NOT FOR BIDDING

SECTION 131200 – PREFABRICATED STEEL SHADE SHELTERS

PART 1 - GENERAL

1.1 RELATED DOCUMENTS

A. Drawings and general provisions of the Contract, including General and Supplementary Conditions and Division 01 Specification Sections, apply to this section.

1.2 SUMMARY

A. Section Includes:

1. Structural-steel framing.
2. Metal roof panels.
3. Lighting
4. Accessories.

B. Related Requirements:

1. Section 077253 "Snow Guards" for prefabricated devices designed to hold snow on the roof surface.
2. Section 033000 - Cast-In-Place Concrete: Anchor bolts/base plates are to be provided by shelter manufacturer

1.3 COORDINATION

A. Coordinate sizes and locations of concrete foundations and casting of anchor-rod inserts into foundation walls and footings. Anchor rod installation, concrete, reinforcement, and formwork requirements are specified in Section 033000 "Cast-in-Place Concrete."

1.4 REFERENCES

A. ASTM A 36/A 36M - Standard Specification for Carbon Structural Steel; 2008.
B. ASTM A 325 - Standard Specification for Structural Steel Bolts., Heat Treated, 120/105 KSI Minimum Tensile Strength; 2007a.
C. ASTM F 1554 - Standard Specification for Anchor Bolts, Steel, 36, 50 and 105 KSI Yield Strength; 2007a.
D. ASTM A 563 - Standard Specification for Carbon and Alloy Steel Nuts; 2007a.
E. ASTM A 500 - Standard Specification for Cold-Formed Welded and Seamless Carbon Steel Structural Tubing in Rounds and Shapes; 2007.
F. ASTM A 653/A 653M - Standard Specification for Steel Sheet, Zinc-Coated (Galvanized) or Zinc-Iron Alloy-Coated (Galvanized) by the Hot-Dip Process; 2008.
G. ASTM A 792/A 792M - Standard Specification for Steel Sheet, 55% Aluminum-Zinc Alloy Coated by the Hot-Dip Process; 2008.
H. American Institute of Steel Construction (AISC)(Latest Edition).

NOT FOR BIDDING

I. American Iron and Steel Institute (AISI) Specifications for Cold Formed Members.
J. American Society of Testing Material (ASTM).
K. American Welding Society (AWS).
L. OSHA Steel Erection Standard 29 CFR 1926.750 Part R.
M. SSPC-SP 2 -Hand Tool Cleaning; Society for Protective Coatings; 2000.
N. SSPC-SP 10 -Near-White Blast Cleaning; Society for Protective Coatings; 2000.
O. ICC Evaluation Service, ESR-2233, Structural Insulated Panels.

1.5 SYSTEM DESCRIPTION

A. Standard Design Loads: International Building Code (IBC latest Edition), 30 P.S.F. (Ground Snow), 120 M.P.H., Exposure C, Seismic Design Category B.
B. Column to footing connection to be in compliance with OSHA Steel Erection Standard CFR 1926.750 Part R, which requires a minimum of four (4) anchor bolts per column.
C. Design Method shall be per applicable local building code requirements. Manufacturer's design shall utilize a three-dimensional structural analysis to determine all member loads and forces. Design and detailing shall be in compliance with AISC 341 Part I or III.
D. The pre-engineered package shall be shipped as a pre-cut (except for standing seam roof panels) and pre-fabricated package that shall include the structural framing members, roof panels, fasteners, and trim as well as the installation instructions. The structure shall be shipped un-assembled for minimum shipping charges.
E. Field labor shall be only for the assembly of the pre-fabricated parts. No onsite welding shall be required or permitted. Tube frame connection bolts and fasteners shall be concealed, within the tubing or hidden, except at the baseplate. All rafter tails shall be factory welded into place as well as all compression ring/tube covers. On multi-tiered buildings the rafter risers shall be welded to the lower rafters for ease of installation. No openings near the base of the column with screwed on cover plates except for electrical access. No through bolting shall be allowed for any connections due to the possibility of the deformation of the tube steel parts.
F. One opening near the base of the column including screwed on cover plate shall be included for electrical access.

1.6 PREINSTALLATION MEETINGS

A. Preinstallation Conference: Conduct conference at Project site.

1. Review methods and procedures related to shade shelter systems including, but not limited to the following:

   a. Condition of foundations and other preparatory work performed by other trades.
   b. Structural load limitations.
   c. Construction schedule. Verify availability of materials and erector's personnel, equipment, and facilities needed to make progress and avoid delays.
   d. Required tests, inspections, and certifications.
   e. Unfavorable weather and forecasted weather conditions and impact on construction schedule.

2. Review methods and procedures related to metal roof panel assemblies including, but not limited to, the following:

NOT FOR BIDDING

a. Compliance with requirements for purlin and rafter conditions, including flatness and attachment to structural members.
b. Structural limitations of purlins and rafters during and after roofing.
c. Flashings, special roof details, roof drainage, roof penetrations, equipment curbs, and condition of other construction that will affect metal roof panels.
d. Temporary protection requirements for metal roof panel assembly during and after installation.
e. Roof observation and repair after metal roof panel installation.

3. Review methods and procedures related to metal wall panel assemblies including, but not limited to, the following:

a. Compliance with requirements for support conditions, including alignment between and attachment to structural members.
b. Temporary protection requirements for metal wall panel assembly during and after installation.

1.7 ACTION SUBMITTALS

A. Product Data: For each type of shade shelter system component.

1. Include construction details, material descriptions, dimensions of individual components and profiles, and finishes for the following:

a. Metal roof panels.

B. Shop Drawings: Indicate components by others. Include full building plan, elevations, sections, details and the following:

1. Structural-Framing Drawings: Show complete fabrication of primary and secondary framing; include provisions for openings. Indicate welds and bolted connections, distinguishing between shop and field applications. Include transverse cross-sections.

2. Metal Roof Panel Layout Drawings: Show layouts of panels including methods of support. Include details of edge conditions, joints, panel profiles, corners, anchorages, clip spacing, trim, flashings, closures, and special details. Distinguish between factory- and field-assembled work; show locations of exposed fasteners.

a. Show roof-mounted items including roof hatches, equipment supports, pipe supports and penetrations, lighting fixtures, and items mounted on roof curbs.

3. Accessory Drawings: Include details of the following items, at a scale of not less than 1-1/2 inches per 12 inches (1:8):

Flashing and trim.

C. Samples for Initial Selection: For units with factory-applied finishes.

D. Samples for Verification: For the following products:

NOT FOR BIDDING

1. Panels: Nominal 12 inches (300 mm) long by actual panel width. Include fasteners, closures, and other exposed panel accessories.
2. Flashing and Trim: Nominal 12 inches (300 mm) long. Include fasteners and other exposed accessories.
3. Accessories: Nominal 12-inch- (300-mm-) long Samples for each type of accessory.

E. Delegated-Design Submittal: For shade shelter systems.

1. Include analysis data indicating compliance with performance requirements and design data signed and sealed by the qualified professional engineer responsible for their preparation.
2. Provide site-specific foundation design signed and sealed by a Professional Engineer In the state of Delaware. Generic or "typical" foundation details and design shall not be acceptable.
3. Site-specific structural calculations shall show the conformance to the local building code information:

   a. International Building Code (IBC latest Edition)
   b. Snow load
   c. Wind exposure
   d. Seismic design category

1.8 INFORMATIONAL SUBMITTALS

A. Qualification Data: For erector and manufacturer.

B. Welding certificates.

C. Letter of Design Certification: Signed and sealed by a qualified professional engineer. Include the following:

1. Name and location of Project.
2. Order number.
3. Name of manufacturer.
4. Name of Contractor.
5. Building dimensions including width, length, height, and roof slope.
6. Indicate compliance with AISC standards for hot-rolled steel and AISI standards for cold-rolled steel, including edition dates of each standard.
7. Governing building code and year of edition.
8. Design Loads: Include dead load, roof live load, collateral loads, roof snow load, deflection, wind loads/speeds and exposure, seismic design category or effective peak velocity-related acceleration/peak acceleration, and auxiliary loads (cranes).
9. Load Combinations: Indicate that loads were applied acting simultaneously with concentrated loads, according to governing building code.
10. Building-Use Category: Indicate category of building use and its effect on load importance factors.

D. Erector Certificates: For qualified erector, from manufacturer.

E. Material Test Reports: For each of the following products:

NOT FOR BIDDING

1. Structural steel including chemical and physical properties.
2. Bolts, nuts, and washers including mechanical properties and chemical analysis.
3. Tension-control, high-strength, bolt-nut-washer assemblies.
4. Shop primers.
5. Nonshrink grout.

F. Source quality-control reports.

G. Field quality-control reports.

H. Surveys: Show final elevations and locations of major members. Indicate discrepancies between actual installation and the Contract Documents. Have surveyor who performed surveys certify their accuracy.

I. Sample Warranties: For special warranties.

1.9 CLOSEOUT SUBMITTALS

A. Maintenance Data: For metal panel finishes to include in maintenance manuals.

1.10 QUALITY ASSURANCE

A. Manufacturer Qualifications: A qualified manufacturer.

1. The product shall be designed and fabricated at a facility operated and directly supervised by the supplier.
2. The supplier shall have at least 5 years of experience in the design and fabrication of preengineered steel shelters.
3. Membership in American Institute of Steel Construction.
4. Membership in American Welding Society.
5. Full time on-staff licensed Professional Engineer.
6. Full time on-staff quality control manager.
7. Engineering Responsibility: Preparation of comprehensive engineering analysis and Shop Drawings by a professional engineer who is legally qualified to practice in jurisdiction where Project is located.

B. Erector Qualifications: An experienced erector who specializes in erecting and installing work similar in material, design and extent to that indicated for this Project and who is acceptable to manufacturer.

C. Welding Qualifications: Qualify procedures and personnel according to the following:

1. AWS D1.1/D1.1M, "Structural Welding Code - Steel."
2. AWS D1.3, "Structural Welding Code - Sheet Steel."

D. Land Surveyor Qualifications: A professional land surveyor who practices in jurisdiction where Project is located and who is experienced in providing surveying services of the kind indicated.

NOT FOR BIDDING

1.11 DELIVERY, STORAGE, AND HANDLING

A. Coordinate delivery with Owner and General Contractor.

B. Store products in manner to prevent damage prior to installation. Where products need to be stored outdoors, store off the ground and place so that water will drain.

C. Inspect parts within 48 hours of delivery, compare with manufacturer's bill of materials and report any missing or non-conforming parts to the manufacturer within this time frame.

D. Deliver components, sheets, panels, and other manufactured items so as not to be damaged or deformed. Package metal panels for protection during transportation and handling.

E. Unload, store, and erect metal panels in a manner to prevent bending, warping, twisting, and surface damage.

F. Stack metal panels horizontally on platforms or pallets, covered with suitable weathertight and ventilated covering. Store metal panels to ensure dryness, with positive slope for drainage of water. Do not store metal panels in contact with other materials that might cause staining, denting, or other surface damage.

1.12 FIELD CONDITIONS

A. Weather Limitations: Proceed with panel installation only when weather conditions permit metal panels to be installed according to manufacturers' written instructions and warranty requirements.

1.13 WARRANTY

A. Special Warranty on Metal Panel Finishes: Manufacturer agrees to repair finish or replace metal panels that show evidence of deterioration of factory-applied finishes within specified warranty period.

1. Exposed Panel Finish: Deterioration includes, but is not limited to, the following:

   a. Color fading more than 5 Hunter units when tested according to ASTM D 2244.
   b. Chalking in excess of a No. 8 rating when tested according to ASTM D 4214.
   c. Cracking, checking, peeling, or failure of paint to adhere to bare metal.

2. Finish Warranty Period: 10 years from date of Substantial Completion.

B. Special Weathertightness Warranty for Standing-Seam Metal Roof Panels: Manufacturer agrees to repair or replace standing-seam metal roof panel assemblies that leak or otherwise fail to remain weathertight within specified warranty period.

1. Warranty Period: 10 years from date of Substantial Completion.

NOT FOR BIDDING

PART 2 - PRODUCTS

2.1 MANUFACTURERS

A. Manufacturers: Subject to compliance with requirements, available manufacturers offering products that may be incorporated into the Work include, but are not limited to the following:

1. ICON Shelter Systems, Inc.
2. Classic Recreation Systems
3. Coverworx Recreational Architecture
4. Poligon, Porter Corp.
5. RCP Shelters, Inc.
6.

B. Source Limitations: Obtain shade shelter system components, including primary and secondary framing and metal panel assemblies, from single source from single manufacturer.

2.2 SYSTEM DESCRIPTION

A. Provide a complete, integrated set of mutually dependent components and assemblies that form a shade shelter system capable of withstanding structural and other loads, thermally induced movement, and exposure to weather without failure or infiltration of water into building interior.

B. All columns, rafters, tie-beams, purlins, compression rings shall be factory welded assemblies with provisions for bolted connections in the field. There will be no field welding required for any connections. All base plates, stiffener plates, rafter clips and end plates shall be factory welded in place.

C. Factory welded connections shall be made by certified welders in accordance with the latest edition of AWS D1.1 and D1.3 specifications. All welders shall be AWS certified.

D. Factory Frame Finish: Powder coated per the following procedure; the steel shall be shot-blasted to the specification of SSPC-SPI 0 (shot-blasted to near white condition), this will remove all oil residue, mil scale, weld spatter and slag. The second step the steel is washed and zinc phosphated in an eight stage electro deposition pretreatment process. Then it is immersed in a liquid epoxy and coated to uniform 0.7-0.9 mils, this Ecoat process totally encapsulates the part preventing rusting, no welding shall be allowed after the E-coating has been applied. Then a double coat of TGIC polyester powder is applied, one coat of color and one clear coating for a final finish that is 8-12 mils thick. All materials shall be inspected to meet 100% coating, proper cure, film thickness and impact resistance. Color to be selected form the manufacturer's standard color chart. No wet-coat powder-coat alternatives shall be accepted.

E. Primary Frame Type:

1. Shelters: Pre-engineered, prefabricated all-steel framed shelters; column, rafter, and purlin structure, with steel roof panels or T&G roof deck or Sandwich Panel roof deck, all flashing, trim, accessories, and fasteners required for a complete installation.

NOT FOR BIDDING

2. Structural framing (Columns, rafters, tie-beams, purlins, etc.) shall be Hollow Structural Sections (HSS) meeting ASTM A500 grade B. "I" beams, tapered columns, open "C" channels, cold-formed box sections or wood products shall not be accepted.
3. Compression rings shall be made of structural channel sections or welded plate sections that meet ASTM A36 grade steel.
4. Structural connections shall be made with A325 high-strength bolts and A563 structural nuts, ASTM F1554 grade 36 anchor bolts, self-drilling screws and poprivets.
5. Tongue and Groove Roof Deck: 2x6 tongue and groove wood roof deck, Western Lodgepole Pine, kiln dried, #2 or better, one edge V'd, one edge grooved.
6. Rigid Clear Span: Solid-member, structural-framing system without interior columns.

F. Roof System: Manufacturer's standard standing-seam, vertical rib, metal roof panels.

G. Lighting: Provide general lighting equal to (3) foot candles under the entire area of the shelter.
1. Lights to be 120V, LED, lensed exterior grade.
2. Controls: photo cell and time clock.
3. Power to be provided to shelter from existing panel in the existing main entrance building.

2.3 PERFORMANCE REQUIREMENTS

A. Delegated Design: Engage a qualified professional engineer, as defined in Section 014000 "Quality Requirements," to design shade shelter system.

B. Structural Performance: Shade shelter systems shall withstand the effects of gravity loads and the following loads and stresses within code prescribed limits.

1. Design Loads: As indicated on drawings.
2. Deflection and Drift Limits: Design shade shelter system assemblies to withstand serviceability design loads without exceeding deflections and drift limits recommended in AISC Steel Design Guide No. 3 "Serviceability Design Considerations for Steel Buildings."
3. Deflection and Drift Limits: No greater than the following:

a. Purlins and Rafters: Vertical deflection of **1/240** of the span.
b. Metal Roof Panels: Vertical deflection of **1/240** of the span.
c. Design secondary-framing system to accommodate deflection of primary framing and construction tolerances, and to maintain clearances at openings.
d. Lateral Drift: Maximum of **1/200** of the building height.

C. Seismic Performance: Shade shelter system shall withstand the effects of earthquake motions determined according to ASCE/SEI 7.

D. Thermal Movements: Allow for thermal movements from ambient and surface temperature changes by preventing buckling, opening of joints, overstressing of components, failure of joint sealants, failure of connections, and other detrimental effects. Base calculations on surface temperatures of materials due to both solar heat gain and nighttime-sky heat loss.

1. Temperature Change: 120 deg F (67 deg C), ambient; 180 deg F (100 deg C), material surfaces.

NOT FOR BIDDING

E. Structural Performance for Metal Roof Panels: Provide metal panel systems capable of withstanding the effects of the following loads, based on testing according to ASTM E 1592:

1. Wind Loads: As indicated on Drawings.

F. Water Penetration for Metal Roof Panels: No water penetration when tested according to ASTM E 1646 at the following test-pressure difference:

1. Test-Pressure Difference: 2.86 lbf/sq. ft. (137 Pa).

G. Wind-Uplift Resistance: Provide metal roof panel assemblies that comply with UL 580 for wind-uplift-resistance class indicated.

1. Uplift Rating: **UL 90**.

H. Energy Star Listing: Roof panels that are listed on the DOE's ENERGY STAR "Roof Products Qualified Product List" for steep-slope roof products.

2.4 STRUCTURAL-STEEL FRAMING

A. Structural Steel: Comply with AISC 360, "Specification for Structural Steel Buildings."

B. Bolted Connections: Comply with RCSC's "Specification for Structural Joints Using High-Strength Bolts."

C. Cold-Formed Steel: Comply with AISI's "North American Specification for the Design of Cold-Formed Steel Structural Members" for design requirements and allowable stresses.

D. Materials:

1. W-Shapes: ASTM A 992/A 992M; ASTM A 572/A 572M, Grade 50 or 55 (345 or 380); or ASTM A 529/A 529M, Grade 50 or 55 (345 or 380).
2. Channels, Angles, M-Shapes, and S-Shapes: ASTM A 36/A 36M; ASTM A 572/A 572M, Grade 50 or 55 (345 or 380); or ASTM A 529/A 529M, Grade 50 or 55 (345 or 380).
3. Plate and Bar: ASTM A 36/A 36M; ASTM A 572/A 572M, Grade 50 or 55 (345 or 380); or ASTM A 529/A 529M, Grade 50 or 55 (345 or 380).
4. Steel Pipe: ASTM A 53/A 53M, Type E or S, Grade B.
5. Cold-Formed Hollow Structural Sections: ASTM A 500, Grade B or C, structural tubing.
6. Structural-Steel Sheet: Hot-rolled, ASTM A 1011/A 1011M, Structural Steel (SS), Grades 30 through 55 (205 through 380), or High-Strength Low-Alloy Steel (HSLAS) or High-Strength Low-Alloy Steel with Improved Formability (HSLAS-F), Grades 45 through 70 (310 through 480); or cold-rolled, ASTM A 1008/A 1008M, Structural Steel (SS), Grades 25 through 80 (170 through 550), or HSLAS, Grades 45 through 70 (310 through 480).
7. Metallic-Coated Steel Sheet: ASTM A 653/A 653M, SS, Grades 33 through 80 (230 through 550), or HSLAS or HSLAS-F, Grades 50 through 80 (340 through 550); with G60 (Z180) coating designation; mill phosphatized.

NOT FOR BIDDING

8. Metallic-Coated Steel Sheet Prepainted with Coil Coating: Steel sheet, metallic coated by the hot-dip process and prepainted by the coil-coating process to comply with ASTM A 755/A 755M.

    a. Zinc-Coated (Galvanized) Steel Sheet: ASTM A 653/A 653M, SS, Grades 33 through 80 (230 through 550), or HSLAS or HSLAS-F, Grades 50 through 80 (340 through 550); with G90 (Z275) coating designation.
    b. Aluminum-Zinc Alloy-Coated Steel Sheet: ASTM A 792/A 792M, SS, Grade 50 or 80 (340 or 550); with Class AZ50 (AZM150) coating.
9. Non-High-Strength Bolts, Nuts, and Washers: ASTM A 307, Grade A, carbon-steel, hex-head bolts; ASTM A 563 (ASTM A 563M) carbon-steel hex nuts; and ASTM F 844 plain (flat) steel washers.

10. Structural Bolts, Nuts, and Washers: ASTM A 325 (ASTM A 325M), Type 1, heavy-hex steel structural bolts; ASTM A 563 (ASTM A 563M) heavy-hex carbon-steel nuts; and ASTM F 436 (ASTM F 436M) hardened carbon-steel washers.

11. High-Strength Bolts, Nuts, and Washers: ASTM A 490 (ASTM A 490M), Type 1, heavy-hex steel structural bolts or tension-control bolt-nut-washer assemblies with spline ends; ASTM A 563 (ASTM A 563M) heavy-hex carbon-steel nuts; and ASTM F 436 (ASTM F 436M) hardened carbon-steel washers, plain.
12. Tension-Control, High-Strength Bolt-Nut-Washer Assemblies: ASTM F 1852, Type 1, heavy-hex-head steel structural bolts with spline ends.

13. Unheaded Anchor Rods: ASTM F 1554, Grade 36.

    a. Configuration: Straight.
    b. Nuts: ASTM A 563 (ASTM A 563M) [**heavy-**]hex carbon steel.
    c. Plate Washers: ASTM A 36/A 36M carbon steel.
    d. Washers: ASTM F 436 (ASTM F 436M) hardened carbon steel.

E. Finish: Factory primed. Apply specified primer immediately after cleaning and pretreating.

1. Clean and prepare in accordance with SSPC-SP2.
2. Coat with manufacturer's standard primer. Apply primer to primary and secondary framing to a minimum dry film thickness of 1 mil (0.025 mm).

    a. Prime secondary framing formed from uncoated steel sheet to a minimum dry film thickness of 0.5 mil (0.013 mm) on each side.

2.5 METAL ROOF PANELS

A. Standing Seam, Vertical-Rib, Metal Roof Panels: Formed with vertical ribs at panel edges and intermediate stiffening ribs symmetrically spaced between ribs; designed for sequential installation by mechanically attaching panels to supports using concealed clips located under one side of panels and engaging opposite edge of adjacent panels.

1. Material: Zinc-coated (galvanized) or aluminum-zinc alloy-coated steel sheet, 0.024-inch (0.61-mm) nominal uncoated steel thickness. Prepainted by the coil-coating process to comply with ASTM A 755/A 755M.

NOT FOR BIDDING

a. Exterior Finish: Two-coat fluoropolymer.
b. Color: As selected by Architect from manufacturer's full range.

2. Clips: Manufacturer's standard to accommodate thermal movement.
3. Joint Type: Manufacturer's standard.
4. Panel Coverage: 16 inches (406 mm).
5. Panel Height: 2 inches (51 mm).

2.6 ACCESSORIES

A. General: Provide accessories as standard with shade shelter system manufacturer and as specified. Fabricate and finish accessories at the factory to greatest extent possible, by manufacturer's standard procedures and processes. Comply with indicated profiles and with dimensional and structural requirements.

1. Form exposed sheet metal accessories that are without excessive oil-canning, buckling, and tool marks and that are true to line and levels indicated, with exposed edges folded back to form hems.

B. Roof Panel Accessories: Provide components required for a complete metal roof panel assembly including copings, fasciae, corner units, ridge closures, clips, sealants, gaskets, fillers, closure strips, and similar items. Match material and finish of metal roof panels unless otherwise indicated.

1. Closures: Provide closures at eaves and ridges, fabricated of same material as metal roof panels.
2. Clips: Manufacturer's standard, formed from steel sheet, designed to withstand negative-load requirements.
3. Cleats: Manufacturer's standard mechanically seamed cleats formed from steel sheet.
4. Backing Plates: Provide metal backing plates at panel end splices, fabricated from material recommended by manufacturer.

C. Flashing and Trim: Zinc-coated (galvanized) or aluminum-zinc alloy-coated steel sheet, 0.018-inch (0.46-mm) nominal uncoated steel thickness, prepainted with coil coating; finished to match adjacent metal panels.

1. Provide flashing and trim as required to seal against weather and to provide finished appearance. Locations include, but are not limited to, eaves, rakes, corners, bases, framed openings, ridges, fasciae, and fillers.
2. Opening Trim: Zinc-coated (galvanized) or aluminum-zinc alloy-coated steel sheet, 0.018-inch (0.46-mm) nominal uncoated steel thickness, prepainted with coil coating. Trim head and jamb of door openings, and head, jamb, and sill of other openings.

D. Materials:

1. Fasteners: Self-tapping screws, bolts, nuts, self-locking rivets and bolts, end-welded studs, and other suitable fasteners designed to withstand design loads. Provide fasteners with heads matching color of materials being fastened by means of plastic caps or factory-applied coating.

NOT FOR BIDDING

a. Fasteners for Metal Roof Panels: Self-drilling or self-tapping, zinc-plated, hex-head carbon-steel screws, with a stainless-steel cap or zinc-aluminum-alloy head and EPDM sealing washer.
b. Fasteners for Flashing and Trim: Blind fasteners or self-drilling screws with hex washer head.
c. Blind Fasteners: High-strength aluminum or stainless-steel rivets.

2. Corrosion-Resistant Coating: Cold-applied asphalt mastic, compounded for 15-mil (0.4-mm) dry film thickness per coat. Provide inert-type noncorrosive compound free of asbestos fibers, sulfur components, and other deleterious impurities.
3. Nonmetallic, Shrinkage-Resistant Grout: ASTM C 1107/C 1107M, factory-packaged, nonmetallic aggregate grout, noncorrosive, nonstaining, mixed with water to consistency suitable for application and a 30-minute working time.
4. Metal Panel Sealants:

a. Sealant Tape: Pressure-sensitive, 100 percent solids, gray polyisobutylene-compound sealant tape with release-paper backing. Provide permanently elastic, nonsag, nontoxic, nonstaining tape of manufacturer's standard size.
b. Joint Sealant: ASTM C 920; one part elastomeric polyurethane or polysulfide; of type, grade, class, and use classifications required to seal joints in metal panels and remain weathertight; and as recommended by shade shelter system manufacturer.

2.7 FABRICATION

A. General: Design components and field connections required for erection to permit easy assembly.

1. Mark each piece and part of the assembly to correspond with previously prepared erection drawings, diagrams, and instruction manuals.
2. Fabricate structural framing to produce clean, smooth cuts and bends. Punch holes of proper size, shape, and location. Members shall be free of cracks, tears, and ruptures.

B. Tolerances: Comply with MBMA's "Shade shelter Systems Manual" for fabrication and erection tolerances.

C. Primary Framing: Shop fabricate framing components to indicated size and section, with baseplates, bearing plates, stiffeners, and other items required for erection welded into place. Cut, form, punch, drill, and weld framing for bolted field assembly.

1. Make shop connections by welding or by using high-strength bolts.
2. Join flanges to webs of built-up members by a continuous, submerged arc-welding process.
3. Brace compression flange of primary framing with steel angles or cold-formed structural tubing between frame web and purlin web or girt web, so flange compressive strength is within allowable limits for any combination of loadings.
4. Weld clips to frames for attaching secondary framing if applicable, or punch for bolts.
5. Shop Priming: Prepare surfaces for shop priming according to SSPC-SP 2. Shop prime primary framing with specified primer after fabrication.

NOT FOR BIDDING

D. Secondary Framing: Shop fabricate framing components to indicated size and section by roll forming or break forming, with baseplates, bearing plates, stiffeners, and other plates required for erection welded into place. Cut, form, punch, drill, and weld secondary framing for bolted field connections to primary framing.

1. Make shop connections by welding or by using non-high-strength bolts.
2. Shop Priming: Prepare uncoated surfaces for shop priming according to SSPC-SP 2. Shop prime uncoated secondary framing with specified primer after fabrication.

E. Metal Panels: Fabricate and finish metal panels at the factory to greatest extent possible, by manufacturer's standard procedures and processes, as necessary to fulfill indicated performance requirements. Comply with indicated profiles and with dimensional and structural requirements.

1. Provide panel profile, including major ribs and intermediate stiffening ribs, if any, for full length of metal panel.

2.8 SOURCE QUALITY CONTROL

A. Special Inspection: Engage a qualified special inspector to perform source quality control inspections and to submit reports.

1. Accredited Manufacturers: Special inspections will not be required if fabrication is performed by an IAS AC472-accredited manufacturer approved by authorities having jurisdiction to perform such Work without special inspection.

a. After fabrication, submit copy of certificate of compliance to authorities having jurisdiction, certifying that Work was performed according to Contract requirements.

PART 3 - EXECUTION

3.1 EXAMINATION

A. Examine substrates, areas, and conditions, with erector present, for compliance with requirements for installation tolerances and other conditions affecting performance of the Work.

B. Before erection proceeds, survey elevations and locations of concrete- and masonry-bearing surfaces and locations of anchor rods, bearing plates, and other embedments to receive structural framing, with erector present, for compliance with requirements and shade shelter system manufacturer's tolerances.

1. Engage land surveyor to perform surveying.

C. Proceed with erection only after unsatisfactory conditions have been corrected.

NOT FOR BIDDING

3.2 PREPARATION

A. Clean and prepare surfaces to be painted according to manufacturer's written instructions for each particular substrate condition.

B. Provide temporary shores, guys, braces, and other supports during erection to keep structural framing secure, plumb, and in alignment against temporary construction loads and loads equal in intensity to design loads. Remove temporary supports when permanent structural framing, connections, and bracing are in place unless otherwise indicated.

3.3 ERECTION OF STRUCTURAL FRAMING

A. When unloading, pad the forks and use other precautions to protect the powder-coated finish. Do not use chains to move materials. Handle all materials carefully in the field to avoid scratching the powdercoat finish. Before installing the roof, clean the steel and touch up any scratches and chips in the powder-coat finish using touch up paint from the manufacturer.

B. The shelter shall be set on prepared footings or concrete slab (provided by others). Footing details shall be designed by an engineer (retained by other than the manufacturer), based on load information as provided on the manufacturer's supplied drawings. Foundation shall be constructed to all local building code requirements and per good construction practices for the specific site conditions.

C. In accordance with OSHA Steel Erection Standard 29 CFR 1926,750 Part R, anchor bolts shall be installed for proper column stability and shall have a minimum of four (4) anchor bolts per column.

D. Install all parts and pieces per the manufacturer's supplied installation instructions and these specifications. The underside of the tongue and groove decking or sandwich panel roof deck shall be sealed before installation as specified and approved by the landscape architect or owner,

E. Erect shade shelter system according to manufacturer's written instructions and drawings.

F. Do not field cut, drill, or alter structural members without written approval from shade shelter system manufacturer's professional engineer.

G. Set structural framing accurately in locations and to elevations indicated, according to AISC specifications referenced in this Section. Maintain structural stability of frame during erection.

H. Base and Bearing Plates: Clean concrete- and masonry-bearing surfaces of bond-reducing materials, and roughen surfaces prior to setting plates. Clean bottom surface of plates.

1. Set plates for structural members on wedges, shims, or setting nuts as required.
2. Tighten anchor rods after supported members have been positioned and plumbed. Do not remove wedges or shims but, if protruding, cut off flush with edge of plate before packing with grout.
3. Promptly pack grout solidly between bearing surfaces and plates so no voids remain. Neatly finish exposed surfaces; protect grout and allow to cure. Comply with manufacturer's written installation instructions for shrinkage-resistant grouts.

NOT FOR BIDDING

I. Align and adjust structural framing before permanently fastening. Before assembly, clean bearing surfaces and other surfaces that will be in permanent contact with framing. Perform necessary adjustments to compensate for discrepancies in elevations and alignment.

1. Level and plumb individual members of structure.
2. Make allowances for difference between temperature at time of erection and mean temperature when structure will be completed and in service.

J. Primary Framing: Erect framing level, plumb, rigid, secure, and true to line. Level baseplates to a true even plane with full bearing to supporting structures, set with double-nutted anchor bolts. Use grout to obtain uniform bearing and to maintain a level base-line elevation. Moist-cure grout for not less than seven days after placement.

1. Make field connections using high-strength bolts installed according to RCSC's "Specification for Structural Joints Using High Strength Bolts" for bolt type and joint type specified.

a. Joint Type: Snug tightened or pretensioned as required by manufacturer.

K. Secondary Framing: Erect framing level, plumb, rigid, secure, and true to line. Field bolt secondary framing to clips attached to primary framing.

1. Provide rake or gable purlins with tight-fitting closure channels and fasciae.
2. Locate and space wall girts to suit openings such as doors and windows.
3. Provide supplemental framing at entire perimeter of openings, including doors, windows, louvers, ventilators, and other penetrations of roof and walls.

L. Bracing: Install bracing in roof and side walls where indicated on erection drawings.

1. Tighten rod and cable bracing to avoid sag.
2. Locate interior end-bay bracing only where indicated.

M. Framing for Openings: Provide members of proper design and size to reinforce openings and to carry loads and vibrations imposed, including equipment furnished under mechanical and electrical work. Securely attach to structural framing.

N. Erection Tolerances: Maintain erection tolerances of structural framing within AISC 303.

3.4 METAL PANEL INSTALLATION, GENERAL

A. Fabricate and finish metal panels and accessories at the factory, by manufacturer's standard procedures and processes, as necessary to fulfill indicated performance requirements demonstrated by laboratory testing. Comply with indicated profiles and with dimensional and structural requirements.

B. On-Site Fabrication: Subject to compliance with requirements of this Section, metal panels may be fabricated on-site using UL-certified, portable roll-forming equipment if panels are of same profile and warranted by manufacturer to be equal to factory-formed panels. Fabricate according to equipment manufacturer's written instructions and to comply with details shown.

NOT FOR BIDDING

C. Examination: Examine primary and secondary framing to verify that structural-panel support members and anchorages have been installed within alignment tolerances required by manufacturer.

1. Examine roughing-in for components and systems penetrating metal panels, to verify actual locations of penetrations relative to seams before metal panel installation.

D. General: Anchor metal panels and other components of the Work securely in place, with provisions for thermal and structural movement.

1. Field cut metal panels as required for doors, windows, and other openings. Cut openings as small as possible, neatly to size required, and without damage to adjacent metal panel finishes.

a. Field cutting of metal panels by torch is not permitted unless approved in writing by manufacturer.

2. Install metal panels perpendicular to structural supports unless otherwise indicated.
3. Flash and seal metal panels with weather closures at perimeter of openings and similar elements. Fasten with self-tapping screws.
4. Locate and space fastenings in uniform vertical and horizontal alignment.
5. Locate metal panel splices over structural supports with end laps in alignment.
6. Lap metal flashing over metal panels to allow moisture to run over and off the material.

E. Metal Protection: Where dissimilar metals contact each other or corrosive substrates, protect against galvanic action by painting contact surfaces with corrosion-resistant coating, by applying rubberized-asphalt underlayment to each contact surface, or by other permanent separation as recommended by metal roof panel manufacturer.

F. Joint Sealers: Install gaskets, joint fillers, and sealants where indicated and where required for weatherproof performance of metal panel assemblies. Provide types of gaskets, fillers, and sealants indicated; or, if not indicated, provide types recommended by metal panel manufacturer.

1. Seal metal panel end laps with double beads of tape or sealant the full width of panel. Seal side joints where recommended by metal panel manufacturer.
2. Prepare joints and apply sealants to comply with requirements in Section 079200 "Joint Sealants."

3.5 METAL ROOF PANEL INSTALLATION

A. General: Provide metal roof panels of full length from eave to ridge unless otherwise indicated or restricted by shipping limitations.

1. Install ridge caps as metal roof panel work proceeds.
2. Flash and seal metal roof panels with weather closures at eaves and rakes. Fasten with self-tapping screws.

NOT FOR BIDDING

B. Standing-Seam Metal Roof Panels: Fasten metal roof panels to supports with concealed clips at each standing-seam joint, at location and spacing and with fasteners recommended by manufacturer.

1. Install clips to supports with self-drilling or self-tapping fasteners.
2. Install pressure plates at locations indicated in manufacturer's written installation instructions.
3. Snap Joint: Nest standing seams and fasten together by interlocking and completely engaging factory-applied sealant.
4. Seamed Joint: Crimp standing seams with manufacturer-approved motorized seamer tool so that clip, metal roof panel, and factory-applied sealant are completely engaged.
5. Rigidly fasten eave end of metal roof panels and allow ridge end free movement for thermal expansion and contraction. Predrill panels for fasteners.
6. Provide metal closures at peaks, rake edges each side of ridge caps.

C. Metal Fascia Panels: Align bottom of metal panels and fasten with blind rivets, bolts, or self-drilling or self-tapping screws. Flash and seal metal panels with weather closures where fasciae meet soffits, along lower panel edges, and at perimeter of all openings.

3.6 ACCESSORY INSTALLATION

A. General: Install accessories with positive anchorage to building and weathertight mounting, and provide for thermal expansion. Coordinate installation with flashings and other components.

1. Install components required for a complete metal roof panel assembly, including trim, copings, ridge closures, seam covers, flashings, sealants, gaskets, fillers, closure strips, and similar items.
2. Install components for a complete metal wall panel assembly, including trim, copings, corners, seam covers, flashings, sealants, gaskets, fillers, closure strips, and similar items.
3. Where dissimilar metals contact each other or corrosive substrates, protect against galvanic action by painting contact surfaces with corrosion-resistant coating, by applying rubberized-asphalt underlayment to each contact surface, or by other permanent separation as recommended by manufacturer.

B. Flashing and Trim: Comply with performance requirements, manufacturer's written installation instructions, and SMACNA's "Architectural Sheet Metal Manual." Provide concealed fasteners where possible, and set units true to line and level. Install work with laps, joints, and seams that will be permanently watertight and weather resistant.

1. Install exposed flashing and trim that is without excessive oil-canning, buckling, and tool marks and that is true to line and levels indicated, with exposed edges folded back to form hems. Install sheet metal flashing and trim to fit substrates and to result in waterproof and weather-resistant performance.
2. Expansion Provisions: Provide for thermal expansion of exposed flashing and trim. Space movement joints at a maximum of 10 feet (3 m) with no joints allowed within 24 inches (600 mm) of corner or intersection. Where lapped or bayonet-type expansion provisions cannot be used or would not be sufficiently weather resistant and waterproof, form expansion joints of intermeshing hooked flanges, not less than 1 inch (25 mm) deep, filled with mastic sealant (concealed within joints).

NOT FOR BIDDING

3.7 FIELD QUALITY CONTROL

A. Special Inspections: Engage a qualified special inspector to perform field quality control special inspections and to submit reports.

B. Product will be considered defective if it does not pass tests and inspections.

C. Prepare test and inspection reports.

3.8 CLEANING AND PROTECTION

A. Repair damaged galvanized coatings on galvanized items with galvanized repair paint according to ASTM A 780/A 780M and manufacturer's written instructions.

B. Remove and replace glass that has been broken, chipped, cracked, abraded, or damaged during construction period.

C. Touchup Painting: After erection, promptly clean, prepare, and prime or reprime field connections, rust spots, and abraded surfaces of prime-painted structural framing and accessories.

1. Clean and prepare surfaces by SSPC-SP 2, "Hand Tool Cleaning," or by SSPC-SP 3, "Power Tool Cleaning."
2. Apply a compatible primer of same type as shop primer used on adjacent surfaces.

D. Touchup Painting: Cleaning and touchup painting are specified in Section 099113 "Exterior Painting" and Section 099123 "Interior Painting."

E. Metal Panels: Remove temporary protective coverings and strippable films, if any, as metal panels are installed. On completion of metal panel installation, clean finished surfaces as recommended by metal panel manufacturer. Maintain in a clean condition during construction.

1. Replace metal panels that have been damaged or have deteriorated beyond successful repair by finish touchup or similar minor repair procedures.

END OF SECTION 131200

NOT FOR BIDDING

SECTION 131500 - POOL GENERAL REQUIREMENTS

PART 1 - GENERAL

RELATED DOCUMENTS

Drawings and General Provisions of the Contract.

WORK INCLUDED:

This Section describes the various general requirements of the pool components of the project as well as several miscellaneous components of special application to the project as shown on the Drawings. Supplemental reinforced concrete provisions are also included for pool work, decking, the pipe and main drain encasement.

SUBMITTALS:

Provide submittals with complete product data on all components of the project relating to the pools. Provide manufacturer's and (where applicable) testing lab certifications that the materials comply with the referenced standards. Provide one sample to the Engineer of each of the following: FW inlet including waterstop coupling, tile, 3/4" ball valve, lane line anchor, color samples of pool finish. Complete piping schematics shall be submitted.

DELIVERY, STORAGE AND HANDLING:

The Contractor shall be responsible for the safe unloading, storage, and care of all material furnished by or to him until it has been properly incorporated into the work. When materials cannot be placed at the site of the work, store in protected area at no expense to the Owner.

QUALITY ASSURANCE:

Construction of Pools: A firm specializing and experienced in the installation of the type of components and systems specified for a minimum of 5 years. Experience shall include large commercial pools. The Contractor is required to meet all licensing laws in the state and county of the work. Certain components are specifically specialties of the swimming pool industry and all components must comply with the regulations governing swimming pools. However, many components are detailed and specified as custom components and not necessarily in accordance with conventional swimming pool practice, and variances from the contract documents shall not be granted based solely on industry convention.

Pool Subcontractors must use their own forces for at least 50% of the work. They shall comply with all requirements of the Drawings and Specifications. The Pool Subcontractor must be willing and able to conform to the contract documents in all respects, including complete and comprehensive submittals.

Pools shall be "formed-and-poured" or shotcrete and shall be finished in Daimond-Brite plaster or equal aggregate-reinforced plaster. Formed-and-poured application shall require the surface to be "hard-blasted" for receiving a plaster finish. Gunite shall not be allowed without a thorough submittal showing the experience of the nozzleman and the finishing crew. Test break panels, cored, shall be required. No "brown coats" are allowed.

Sumps, surge-tank, and all wetted components must be constructed by the pool subcontractor.

NOT FOR BIDDING

Extent of sealing and coatings for pool work, includes all pool surfaces and inside of sumps and formed gutters. All wetted components must be under the responsibility of the pool subcontractor.

Regulations: The Contractor's attention is brought to the peculiar standards and regulations applying to this type of work (all with which the Contractor must comply) including, but not limited to, the following:

1.) NEC 680
2.) State of Delaware Pool Codes

Coordination of Trades: The contractor shall exercise special care in the coordination of trades in that many of the specialized pool components are the products of suppliers with which the conventional sub-contractors are unfamiliar.

Design Intent and Project Requirements: The design intent is for the contractor to provide a finished, functional facility with first class standards of architectural finishes, workmanship, and tolerances. The pool must also conform to length tolerances of +1", -0". The basic structural shells are to be constructed of reinforced concrete conforming with ACI standards, particularly the standards for water holding structures. The reinforced concrete shall conform in all respects with Division 3 of these Specifications except as specifically modified herein. Piping and equipment shall be non-metallic to the maximum practical extent. No leakage in the pool shells or piping systems is acceptable (the tolerances and testing requirements are described later herein).

PART 2 - PRODUCTS:

General: Provide products as listed herein or in other Division 13 Sections or as noted on the Drawings. Any substitutes must be equal to those listed and bear the approval stamp of the National Sanitation Foundation (NSF). All items required for a complete and functional facility shall be supplied by the Contractor whether specifically listed or not, unless specifically designated to be furnished by Owner, in which cases the Contractor will install the items at no additional cost.

POOL STRUCTURE AND FINISHES:

Formed-and-Poured Placement: Refer to applicable sections of Division 3. Surfaces must be "hard-blasted" for a plaster finish. Concrete strength shall be 4,000 psi.

Shotcrete and Gunite Placement: If allowed, exercise care to "cut" the surface to the proper tolerances and to assure a vertical wall face to within the specified tolerances. Shotcrete mixes shall be a 5,000 psi strength. Surfaces must be roughened for plaster. Absolutely no skim-coats are permitted. If resurfacing is required, it will be done with non-shrink, high-strength epoxy mortars that are documented by the Pool Subcontractor to be compatible with the pool finish coatings.

Injection Sealing shall be with Sika-Dur 52 Injection Resin. All visible cracks will be injection sealed per the manufacturer's specifications by an experienced technician.

Waterstops: Greenstreak bulb-type PVC (with all applicable specials) shall be placed at all joints, including floor-to-wall joints whether poured or shotcrete or gunite. The specified waterstop herein shall be used in all cases. Bentonite rope products or Synkoflex are not acceptable except at joints between walls and lids of surge tanks.

NOT FOR BIDDING

Concrete: Concrete shall be the standard product of local ready-mix suppliers. No job-site mixing is allowed. Concrete mix designs of 4,000 psi strength with a maximum 5-inch slump and 3/4" to 1" coarse aggregate (3/8" to 1/2" for shotcrete and up to 7" slump) shall be submitted for approval. Calcium chloride is not acceptable.

Reinforcing Steel: Grade 60 deformed bars.

All edges, joints, lanes, and other markings: Tile markings are required for plaster finishes.

Tile: Frostproof, unglazed ceramic mosaic tile by Dal Tile, Florida Tile, American Olean, or Crossville, conforming to ANSI 137.1, in dark blue (price class 4 or 5 as selected) . 8" tile is required at depth and no-diving markings on deck. Scum-line tile (where applicable) shall be glazed. Lane targets shall be non-slip. All lane stripes and targets shall utilize 6x6 tile. Expansion joints shall be edged in 2" white tile. Stair nosing shall be 2"x2" black tile.

Pool Joint Sealants: Two part flexible epoxy, equal to Vulkem 245 by Tremco. Apply according to manufacturer's instructions.

Grating: At main drains shall comply with ASME A112.19.8 2007. Maximum opening is 1/2". The design sizes are based on a minimum of 40% open. All shall be white. Angle frames shall be the standard accessory of the grating manufacturer. Main Drains shall conform to the Virginia Graem Baker Pool and Spa Safety Act in all respects. The 18"x54" drains indicated on the plans shall be products certified for a minimum of 1,900-gpm each.

POOL MECHANICAL & EQUIPMENT:

Pool Mechanical components shall be as listed here or on the Drawings or as covered in other Sections of these specifications. The Contractor is fully responsible for coordinating the purchase and installation of these components.

Stainless Steel Gutter System: The gutter shall be equal to Paddock Model R300TG with a 1" deck-to-water cross-section and dimensions as shown on the drawings. The single piece grate and hand-hold shall be light gray thermoplastic, covering the entire top surface of the gutter.

Filtered Water Return Inlets: As shown on the Drawings. The inlets at the surge tank shall be adjustable Hayward wall inlets, set into a female thread adapter coupling with pvc waterstop ring. The inlet shall be removable without chipping out plaster or concrete. Fabricate and deliver to the Owner a tool for unscrewing the inlet. Provide 2 spare inlets to the Owner. Inlet fittings shall be Heyward Model SP-1425, 2" MIP adjustable wall inlet. At the plunge pool, the inlets shall be integral with the gutter return channel.

OTHER COMPONENTS:

Rail Goods: All rail goods shall be 304L or 316 stainless steel, conforming to ADA 1.5" standard, polished and buffed, with minimum .120" wall.

Hand Rails: Custom formed flat top (3-bend type, 12" flat at high end), 34" high at deck, 2:1 slope, for anchoring in bottom step and deck, 6" end radii, with bronze anchors and stainless steel escutcheons, similar to Spectrum Model 23504 or equal by KDI.

Deck Items: as shown on the Drawings or as described herein,

NOT FOR BIDDING

Handicap Lift: In accordance with the latest guidelines of the US Dept. of Justice, a fixed, battery-operated lift, equal to the "Freedom" brand from Spectrum Products. Include a complete charging system and 2 batteries.

Depth Markers & No Diving: Use 6" ceramic tile pictorials with 4" numerals embedded in the deck and at the water-line in the pool. Place at 20 feet spacing and at slope breaks and 1-foot increments or as shown, whichever is more frequent. All markings shall be non-slip. No Diving markers (at all depths less than 5') shall be the international pictorial.

Life Guard Stands: Portable, "Mendota Chair" Model 45023 by Spectrum (800) 776-5309, 1 each at 4' tall.

Miscellaneous Equipment:

Ultra Max Vacuum Unit with remote control, caddy cart, GFI, timer control. One unit.

Pool Maintenance Pump: 1hp, 1-1/2" hose,110v, 18" vacuum head with pole, 25 feet of hose, with complete accessory kit, equal to Swimtime Model P0[illegible]9900.

Eye-Wash: Dual 32 oz. eyewash station, Grainger #5T997.

Signs: 2 each chlorine and acid NFPA signs from Direct Safety Company of Phoenix, AZ; (800)528-7405.

PART 3 - EXECUTION

ALIGNMENT AND GRADES:

Bring subgrade to proper lines and grades by excavation that minimizes disturbance of subgrade material. Remove unacceptable material, and bring to proper grade with select fill placed in 6-inch loose lifts and compact to 98% of maximum standard proctor dry density. See division 2 for more complete criteria.

Provide 6-inches minimum compacted graded, free draining, granular fill under all slabs, covered by 6 mil poly-sheet.

Install all systems (shown diagrammatic) and appurtenances at the locations shown on the Drawings and to the position, alignment, and grade shown thereon, or in the event of conflict, as directed by the Engineer. All equipment shall be installed in strict accordance with the manufacturer's recommendations. Where specific elevations or grades are not indicated, seek direction as needed from the Engineer, and set components at continuous slopes or level, as applicable, to tolerances as governed by industry practice. See Section 13152 for piping requirements.

Install all imbeds in strict conformance to the details and Specifications. Coordinate with the electrical subcontractor to ensure that all bonding and grounding of all metal components of the pools in accordance with NEC 680. Comply with all other provisions of NEC 680 as applicable. All fixtures and fittings shall be set plumb and flush with finished grade with zero plus tolerance and 1/8-inch minus tolerance. No sharp or protruding hazards shall be allowed in the pool, on the decks, or anywhere else that could be in contact with bathers. All items shall be installed such that long-term water tight integrity can be

NOT FOR BIDDING

maintained by positive waterstop devices or by reinforced encasement as detailed, or both. A minimum of 8" of concrete, with scheduled reinforcement, is required to be extended beyond any and all imbeds.

Set reinforcing steel as detailed. Place ready-mix concrete in accordance with Division 3. Special attention must be paid to the encasement details which require additional reinforcing over and above what is shown in the typical structural details.

Forming and Pouring: Perform concrete work in conformance with Division 3 requirements. All vertically exposed concrete pool walls must be formed with structural systems. Shape 6-inch radius cove joints in all corners, both vertical and horizontal, both concave and convex. Pool surfaces to be painted shall be smooth trowel finished and shall be "brush-blasted" before painting. All "dog holes" must be filled and smoothed with a non-shrink material that is compatible with the paint and cured fully before painting. Pools to receive plaster finish shall be shot to a uniform, rough-textured finish to receive plaster to the manufacturer's recommended thickness.

HYDROSTATIC TESTS:

Perform leakage tests on all components. No apparent leakage is acceptable. With a minimum of 2 pans as an evaporation test set up for base line measurement, the allowable drop in the pool level shall not exceed 1/8-inch per day. Furnish suitable and all necessary apparatus for testing and perform in the presence of the Owner's Representative for a period spanning at least 18-hours.

LEAKS, CRACKS, AND BLEMISHES:

All visible cracks and apparent leaks, regardless of the apparent or claimed cause will be repaired by the Contractor at no cost to the Owner by epoxy pressure injection followed by re-surfacing. Blemishes shall be repaired by power grinding and/or filling with epoxy based mortars as compatible with the coating products.

Injection Sealing (where necessary): The injection process will be in strict conformance to manufacturer's recommendations. Generally, injection nipples will be drilled-in and set at recommended intervals; the joint surface will be cleaned and opened; a sealing compound will be applied to the surface of the joint to confine the injected product; and, following injection and set, the nipples will be removed, and the surface shall be ground smooth and clean. All visible cracks shall be injected prior to application of coatings.

CLEANING AND FINISHING:

Thoroughly clean and flush all pipe, fittings, valves, and appurtenances prior to plastering. Partially fill pool and run circulation system at full flow to assure clean systems. Dump water and wash surfaces. The contractor shall pay for all water, labor, and damages on account of delay if contamination necessitates the draining, cleaning and refilling of the pools and equipment.

Caulking: Use primer and install caulks in strict conformance to manufacturer's recommendations. Apply caulk after painting and other surfacing as applicable, and use mechanical grinders to clean joint surfaces followed by a primer scrub to remove dust. Include the manufacturer's certificate of proper use and application with the product submittal. This will be a letter from the manufacturer addressing this specific project and the specific intended uses.

The Contractor shall provide initial stabilizing chemicals for the pool water and establish stability as described in Section 13153. Chemicals adequate for 30-days of operation, after acceptance, shall be

NOT FOR BIDDING

supplied by the Contractor. The Contractor shall pay for all water to fill, clean, and refill the pools until accepted by the Owner.

Maintenance Service and Warranty: On outdoor pools, the Contractor shall assist the Owner in winterizing the facility after the first season including at least 16 manhours on site. All pool work shall be warranted for materials and labor for 2 years from acceptance. On outdoor pools, the warranty shall extend for 2 years from acceptance or through the start of beneficial operation at the beginning of the 3rd summer season, whichever is longer.

POOL OPERATION AND STARTUP:

Operations Troubleshooting: The Contractor shall provide the services of a qualified pool operator to be on-call to troubleshoot the mechanical and treatment systems for up to 30-days beyond substantial completion. During this time, the Contractor will be responsible for assisting the Owner's staff in maintaining clarity, chemical balance, and proper functioning of all pool mechanical and chemical systems.

Test-and-Balance: Prior to acceptance as substantially complete, the Contractor shall perform and document a thorough test-and-balance of the pool mechanical systems. The work will require the temporary installation of additional flow-meters and gauges; and the work must span at least two filter cycles. The pump outputs and conditions shall be measured at various operating points on the curve, including shut-off and run-out. The data shall include flow, discharge gauge readings, suction gauge readings, other system gauge readings, surge tank level, and air-bleed verifications. The data shall be presented in tabular form as well as plotted on a true copy of the submitted pump curve. In the event of discrepancies in the apparent flow-meter readings, the Contractor shall obtain and temporarily mount accurate ultrasonic or turbine flow-meters at his expense. During the testing, the basket strainer baskets shall be removed; but the effect of replacing them shall be measured at the duty point. The actual feed rates for the chemicals shall be measured by simply disconnection the injection tube and timing the fill into a measuring container. The Contractor shall exercise caution in handling the chemicals and have protection against the fumes and possible spillage.

END OF SECTION 131500

NOT FOR BIDDING

SECTION 131510 - FILTER EQUIPMENT

PART 1 - GENERAL:

RELATED DOCUMENTS:

Drawings and general provisions of the Contract, including General Conditions and Division - 1 specification sections, apply to work of this section.

WORK INCLUDED: The work shall include the furnishing and installing of the high rate-sand pool filters described below, including face valves and piping, internal hardware, media, gauge panels, and startup services.

ACCEPTABLE SYSTEMS:

The filter system described herein and configured on the Drawings is based on 60" diameter horizontal fiberglass high rate sand type. The design is based on a single 50 psi rated tank, as manufactured by the Nemato Corporation, with manual single lever linked backwash valve. Acceptable manufacturers of similar products include Neptune-Benson, Paddock Pool Equipment Company and Stark. The bed area must be that shown on the drawings, not varying up or down from the specified sizing to the extent that the loading rate is below 13.5 gpm/sf nor above 16.0 gpm/sf at the design flow rate.

QUALITY ASSURANCE:

The filter supplier shall take full responsibility for the system packaging, testing, and warranty. The design may not conform to the specific proprietary recommendations of any or all of the above acceptable vendors; therefore, the supplier shall review the Engineer's design and make written recommendations to the Engineer of advisable changes to accommodate their system. These recommendations shall be included with the submittals and shall be subject to the Engineer's consideration. The supplier shall be required to approve the installation in writing before the work is accepted.

PART 2 - PRODUCTS:

GENERAL DESCRIPTION:

The filtration equipment to be furnished under this section shall be a pressure type, high rate sand system and the product of a manufacturer regularly engaged in the fabrication of filters with NSF approval. The filters shall bear the National Sanitation Foundation (NSF) seal of approval, Standard #50 for sand type filters, for a loading rate of 15 gpm/sf.

FILTERING REQUIREMENTS:

The filtration equipment shall consist of high rate sand filter tanks and integral fittings and valves. The equipment shall have the capacity of filtering at the rates indicated on the Drawings at a maximum loading rate indicated. Face piping and fittings, through and including valves, shall be included.

Backwash Requirements:

Each tank shall be backwashed individually for a minimum of 3 minutes or a maximum of 4.5 minutes. The system shall include an orifice in the backwash discharge line which creates a sufficient headloss to limit the

NOT FOR BIDDING

backwash flow rate to the design value or as otherwise recommended by the supplier. The orifice shall be 2" diameter. If filters occasionally require a longer backwash, the operator will take into consideration the sewer capacity receiving the backwash. Backwash shall be by linked manual face valves. These valves shall be supplied by the filter vendor.

TANK CONDITIONS:

Filter Tank:

The filter tank(s) shall be as sized on the Drawings. Each cell shall be designed for 50 psi working pressure, and hydrostatically tested to 50 psi.

INTERNAL COLLECTOR AND DISTRIBUTOR SYSTEMS:

Piping - Internal:

The lower internal distribution system shall be the manufacturer's standard arrangement as approved by NSF. The piping shall be Schedule 80 PVC construction or stronger.

The upper laterals shall be the manufacturer's standard system. It shall be designed to distribute the influent over the full area of the bed, and to carry away the backwash with minimal fouling and restriction of the flow. Any metallic hardware shall be stainless steel.

Accessories:
Standard accessory items shall include 1-1/2" non-metallic sight glass with "Pyrex" glass, remote mounted gauge panel with two 4-1/2" diameter pressure gauges, 1/4" brass petcocks, and 1/4" poly vent tubing with PVC compression adapters. Provide accessories for each cell.

AIR VENTS: Valved manual air relief systems shall be supplied. Air relief ports shall be piped to drain. All high points in filter feed and filtered water piping shall be fitted with manual air reliefs.

MEDIA: Supply and place filter media conforming to the requirements of and in the quantities directed by the filter manufacturer. Bottom layer of support media shall be placed by hand to avoid damage to the under drain system and leveled before the addition of the upper layer(s) of filter media. Concrete underfill is not allowed. All media shall be delivered and stored in 100 lb. bags for ease of handling and elimination of possible contamination. Each grade of media shall be placed in the tank and leveled before placing of next appropriate grade of media. Provide written approval of the filter manufacturer for the specific media to be used. Provide written certification from the filter manufacturer that the actual media purchased for installation conforms to the manufacturer's specifications.

PART 3 - EXECUTION

COORDINATION:

Carefully coordinate the placement of the filtration equipment with the installation of piping and chemical feed systems. All piping shall accommodate the requirements of the filtration system as approved by the Engineer. The Contractor shall be responsible for installing a complete, operable circulation and filtration system.

NOT FOR BIDDING

UNLOADING AND HANDLING:

The Contractor shall use utmost caution and care in unloading and handling the filtration components. No special foundation pads are required for the filtration units in an "at-rest" position; but avoid sharp impact while handling and setting the units to prevent damage to the units or other surfaces. Do not place media until interior is inspected, and the Engineer has received the Manufacturer's written certification.

INSTALLATION:

The installation shall be in strict conformance with the manufacturer's printed instructions. Install the face piping as indicated on the drawings; utilizing no more fittings than implied in the drawings.

OPERATING INSTRUCTIONS:

Furnish a minimum of two copies of the manufacturer's O&M manual which shall include winterizing instructions, and a written, certified warranty complying with the requirements of this specification. Refer to the Test-and-Balance requirements enumerated in Section 13[illegible]500.

END OF SECTION 131510

NOT FOR BIDDING

(PAGE LEFT BLANK)

NOT FOR BIDDING

SECTION 131520 - POOL AND PROCESS PIPING AND VALVES

PART 1 - GENERAL

RELATED DOCUMENTS:

Drawings and General Provisions of the Contract, including General Conditions apply to this and other sections in Division 13.

WORK INCLUDED:

This Section describes the piping, fittings and valves shown on the Drawings for pool and process systems.

SUBMITTALS:

Provide catalog cuts with complete product data on all piping, fittings, and valves. Provide manufacturer's and (where applicable) testing lab certifications that the materials comply with the referenced standards.

DELIVERY, STORAGE AND HANDLING:

The Contractor shall be responsible for the safe unloading, storage, and care of all material furnished by or to him until it has been properly incorporated into the work.

Unload pipe, fittings, and valves by lifting with hoists or skidding to avoid damage. Do not unload by rolling or dropping off trucks. Pipe handled on skidways shall not be skidded or rolled against pipe already on the ground.

Unload the material at the site of the work, near the place where it will be placed in the trench. Place materials so as to least interfere with other work and access. Provide barricades as necessary to protect the public and other workers.

Handle all material carefully to prevent breakage and to avoid damage. Keep interior of all pipe, fittings and valves free of all dirt or foreign matter at all times. Do not place materials in drainage ways or ditches.

When materials cannot be placed at the site of the work, store in protected area at no expense to the Owner.

QUALITY ASSURANCE:

Installer: A firm specializing and experienced in the installation of pool and process piping systems work for not less than 5 years, including all sizes of Schedule 40 and Schedule 80 PVC up to 12-inches diameter, flanged and socket-welded.

PART 2 - PRODUCTS

PIPE:

Plastic Pipe: Plastic pipe shall be Polyvinyl Chloride (PVC) pipe conforming to all requirements of ASTM D 2241 or ASTM D 1785. All pipe shall bear the NSF-pw approval stamp.

PVC plastic extrusion compound shall meet the requirements of ASTM D 1784 for Class 12454-B (PVC 1120).

NOT FOR BIDDING

Pipe (including bell or coupling) shall be Schedule 40 solvent weld pipe as shown on the drawings, except exposed above grade piping which shall be Schedule 80.

Pipe joints shall be solvent weld type (ASTM D 1785). The joints shall be designed to provide for the thermal expansion or contraction experienced with a total temperature change of at least 75 degrees F. in each length of pipe.

FITTINGS:

PVC fittings shall be type compatible with the type of pipe used, i.e.: SCH 40 or SCH 80. For this project, all above grade (e.g.: filter room) pool piping shall be Schedule 80.

Filter room piping and fittings shall be flanged at valves, etc. and to the extent necessary to remove components from the building without cutting pipe. Pipe & Flanges shall be SCH. 80. Bolts and other hardware shall be stainless steel. Bolts shall be extra long with stainless steel washers on both sides.

VALVES:

Butterfly Valves: Valves shall be wafer butterfly type; nylon coated iron body with EPDM seat, nylon coated ductile iron, undercut disc and stainless steel stem equal to Pratt Series 30 with Nylon 11 coating or equal by Dominion. All bolts and nuts in non-immersion service shall be corrosion resistant cadmium plated steel with plated washers to be used when secured to PVC flanges. Nuts, bolts, and washers in immersion service shall be stainless steel. Valves shall be operated by the manufacturer's standard actuators (except float actuators) as required for the applications shown as follows:

> Above Ground or Pit Mounted: Provide 7-position lever lock handle on valves 8" and smaller; worm gear and hand wheels on valves 10" and larger.
>
> Buried: Provide buried worm-gear operator with 2-inch square nut.
>
> Submerged (manually operated): Provide stainless steel braced extension stem from top of quarter-turn valve to surface mounted operators as detailed.
>
> Submerged (float actuated): Provide stainless steel float-and-rod assembly of buoyancy, length, weight, and torque to effectively open and close the valve over a 45-degree up and 45-degree down range (close on rise). Custom fabricate as detailed. Contractor note: actuator is not a valve manufacturer's standard accessory.

Ball Valves: Valves for piping 2-inch and smaller shall be True-Union ball valves with PVC body and ball and Teflon seats, equal to ASAHI/America Duo-Bloc brand.

Check Valves shall be wafer style double door spring-loaded type equal to US Valve Model 09-2-4, with BUNA-N seat, 316 stainless springs and shafts. Body exterior shall be be epoxy coated (Skotchkote or equal).

Valve Boxes: Shall be cast iron, suitable for the valve installed; two piece screw type, adjustable to suit the depth of bury; with extension stem on the operating nut for valves buried deeper than 4 feet to bring the nut to within 2 feet of surface. Minimum shaft diameter shall be 5-1/4 inches. Cover shall be cast iron, marked "WATER".

PRESSURE GAUGES AND THERMOMETERS:

NOT FOR BIDDING

Pressure gauges shall be 3-1/2" dial 1% accuracy with stainless steel or bronze bushed movement, non-ferrous or stainless steel flangeless case, safety blow-out disc, overload and underload stops, 0-50 psi range unless noted otherwise; except for locations where the pressure is above 90 psi, provide dial range selected to have midpoint near the typical operating pressure. Provide 250 psi rated brass gauge cock and piston type impulse dampener with each gauge. Manufacturers: Ashcroft, Marsh, Trerice, Weksler or Weiss.

Flexible Couplings and Connectors:

Flexible connectors shall be flanged and have a working pressure of from 16" Hg vacuum to 125 psi, flanged, equal to Metrosphere by the Metraflex Co.

Pool Plumbing and Hardware:

Inlets, drains, fittings, and other incidental piping attachments shall be as called for on the Drawings or Section 131500.

SLAB AND WALL PENETRATIONS:

Where pipe penetrates a slab or wall, a sleeve of the same material as the pipe shall be imbedded in the concrete. The sleeve shall have a water stop ring attached at the midpoint of the wall. The pipe shall be solvent welded or flanged to the sleeve.

PART 3 - EXECUTION

ALIGNMENT AND GRADES:

Install pipe and appurtenances at the locations shown on the Drawings and to the position, alignment, and grade shown thereon, or in the event of conflict, as directed by the Engineer. Where a specific grade is not indicated, lay pipe at continuous slopes from designated or required low-points, rising to the downstream of the run. At all trapped high points provide air relief by a 1/2" tap and non-metallic ball valve and pipe to the pool system, balance tank, pump suction, or (when approved) to drain. The alignments shown on the plan are specific but do not take into account required changes in elevation via rolled 90's or 45's. The Pool Sub-contractor shall not vary from the intent of the layout, and he shall submit specific requested deviations from the plan for approval.

Provide a minimum of 24-inches of cover measured from finished grade to top of pipe unless otherwise specified. Where obstructions are encountered, the depth may be greater than 24-inches. Depths less than 24-inches may be used only when directed by the Engineer. Allow no intermediate high points between pool and surge tank, pool and pump, or pool and filter/pump room. All pipe shall slope at a minimum of 1% unless specifically approved otherwise. Gutter and skimmer piping shall slope at a minimum of 2%.

Install valves with stems vertical.

Maintain pipe curvatures within the horizontal or vertical permissible deflection, as specified by the manufacturer or Unibell.

Provide pipe supports and hangers for suspended piping at spacings in accordance Unibell PVC handbook. Allow for the expansion and contraction of the pipe. Hangers and supports shall be standard manufactured items for the purpose such as by ITT/Grinnell. They shall be corrosion resistant or epoxy coated mild steel.

NOT FOR BIDDING

INSTALLING PIPE:

Install pipe and appurtenances only when trench conditions are suitable. Trenches must be dry. Proper implements, tools, and facilities shall be provided by the Contractor for the safe and convenient performance of the work.

Lower all pipe, fittings, and valves carefully into the trench piece by piece by means of derrick, ropes, or other suitable tools or equipment. Prevent damage to water main materials and protective coatings and linings. Do not drop or dump pipe materials into the trench.

Carefully examine all pipe and fittings for cracks and other defects while suspended above the trench immediately before installation in final position. Defective pipe or fittings shall be clearly marked and shall be removed from the site.

Clean the bell and spigot ends of each piece of pipe thoroughly before the pipe is laid.

Prevent foreign material from entering the pipe while it is being placed in the line. Provide protective covering for the ends of the pipe until the connection is to be made to the adjacent pipe. During laying operations, no debris, tools, clothing, or other materials shall be placed in the pipe.

As each length of pipe is placed in the trench, solvent clean the bell and the spigot. Apply solvent cement in accordance with the manufacturer's recommendations. Provide heat if necessary. Force the pipe home, twist, and bring to correct line and grade. Secure the pipe in place with approved backfill material tamped around it. Take precautions to prevent dirt from entering the joint space.

Pool and Process piping that is not under pool slabs shall be backfilled and compacted in 6-inch loose lifts with imported granular material (course sand or fine gravel) to the top of pipe zone (6" above the pipe) at a minimum. Compaction shall be to 98% maximum dry density by Modified Proctor. Backfill above the pipe zone shall be in accordance with the earthwork provisions of the Specifications. All pool and process piping below the pool slabs shall be encased in concrete as detailed in the Drawings. Maintain undisturbed or compacted soils adjacent to concrete backfill.

Cutting Pipe: Cut pipe for inserting valves, fittings, or closure pieces in a neat and workmanlike manner without damage to the pipe or lining and so as to leave a smooth end at right angles to the axis of the pipe. Sand or grind the joint smooth.

Detection of Non-ferrous Pipe outside of the Pool: Install detection tape or wire, directly over all non-ferrous pipe, approximately 1 1/2 feet above the pipe. Installed wire or detection device shall be such that Owner can locate installed pipe using a standard electronic detector.

Jointing: Provide jointing of all pipe, fittings, and valves in strict compliance with manufacturer's printed instructions.

Solvent Weld Joints: Make solvent weld joints in accordance with ASTM D 2855.

Flanged Joints: Properly align flanges before tightening. Tighten all nuts with torque limiting wrench. Nuts spaced 180 degrees apart shall be tightened alternately in order to produce equal pressure.

SETTING OF VALVES AND FITTINGS:

Set all valves, plugs, and caps and join to pipe in the manner specified above for cleaning, laying, and joining pipe.

NOT FOR BIDDING

Set valves plumb and provide a cast iron sleeve type valve box for every buried valve. The valve box shall not transmit shock or stress to the valve and shall be centered and plumb over the wrench nut of the valve, with the box cover flush with the surface of the finished pavement or such other level as may be directed. Tamp backfill around valves carefully in 6 inch layers for the full depth of trench with valve box in place. Provide 24-inch square concrete pad around top of valve box.

AIR-RELIEF: All high points (should only occur in Filter Building or at the Pool) install a manual air relief valve and pipe to nearest available pool sump or to drain as approved.

HYDROSTATIC TESTS:

Perform pressure and leakage tests on each section of the line. When a section of pipe of a length deemed adequate by the Engineer is ready for testing, the line shall be thoroughly blown free of air and prepared for testing. Pipe lines shall be tested before the trench is backfilled. If the Health Department requires that they witness the tests, coordinate with their representative for compliance and scheduling.

Furnish suitable pump, connections, and all necessary apparatus. If testing is not acceptable. Test pressures shall be 50 pounds per square inch (psi) and shall be maintained for a minimum of 2 hours. Pressure shall not vary by more than 5 psi during the test. No leakage is allowed. Contractor must provide all temporary blocking, fittings, and other thrust restraint as necessary for the execution of the tests. Locate, remove, and replace any defective pipe, valves, or fittings.
Repeat tests until results are satisfactory to the Engineer.

CLEANING AND MARKING:

Thoroughly clean and flush all pipe, fittings, valves, and appurtenances. The contractor shall pay for all water, labor, and damages on account of delay if mud and other contamination necessitates the draining, cleaning, and refilling of the pools and equipment. Before the work shall be considered complete, remove all material not used and rubbish of every character from the job site. All exposed pipe, fittings, and valves shall be thoroughly cleaned, tagged, and color coded as indicated on the drawings or approved by the engineer. Apply directional arrow decals on all pipe, indicating flow direction during normal operation.

END OF SECTION 1315200

NOT FOR BIDDING

(PAGE LEFT BLANK)

NOT FOR BIDDING

SECTION 131530 - POOL CHEMICAL CONTROL EQUIPMENT AND OTHER ACCESSORIES

PART 1 - GENERAL:

RELATED DOCUMENTS:

Drawings and general provisions of the Contract, including General Conditions, apply to work of this section.

WORK INCLUDED:

This Section of the specifications and related drawings describe requirements pertaining to pool control equipment and other accessories. A "BECS 5" controller with digital display, Stenner pump feed of bleach (12% NaOCl), and a Stenner pump acid feed of acid are the chemical feed and control systems shown on the Drawings. Feeders and controls, described herein for feeding hypochlorite and muriatic acid, are to be purchased, installed, calibrated, and interlocked with the filter feed pump by the Contractor. A small solution style feeder shall be installed on the water feature feed as well. See Section 13150 for Test-and-Balance requirements.

SUBMITTALS:

Make submittals as required in the General Provisions. Provide operation and maintenance data as required in the General Provisions Sections.

PART 2 - PRODUCTS:

AUTOMATIC SWIMMING WATER TREATMENT CONTROL SYSTEM: Equal to BECS System 5.

The controller shall be provided in a wall mountable corrosion-proof non-metal cabinet with a key lockable, windowed door. Controllers housed in a metal cabinet shall not be considered equal. Two 2-1/2" face panel meters shall continuously display pool water pH and chlorine levels. Pool water shall not be permitted to enter the cabinet in any way. All AC line voltage connection shall be accessible only by removing a bolted protective cover.

Printed circuit boards shall be constructed of G10 flame-rated fiberglass and coated with a material impervious to moisture and atmospheric fumes containing chlorine or acid in order to protect electronics against corrosive damage.

All sensing, control and output circuits shall be protected with resettable thermal circuit breakers. Units using disposable fuses rather than resettable circuit breakers shall not be considered equal.

Face panel set level controls shall limit operator selection of control points within a range of 7.2 - 7.8 pH and 0.6 - 3.0 ppm chlorine. Controller output range shall be standard line voltage of not less than 10 amps for control of pumps and solenoid operated valves. Automatic outputs shall be capable of being manually overridden with face panel mode switches. An internal switch shall be provided to allow for complete manual override in the event of electronic malfunction.

Controller shall be capable of being programmed for standard on/off control only.

NOT FOR BIDDING

Controller shall be provided with audible and visual high and low pH and high and low chlorine alarms. Low pH alarm shall prevent chlorine feed. High pH alarms shall prevent soda ash feed. Any of these alarms shall activate a remote master alarm signal.

Controller shall be equipped with an internal solid-state overfeed circuit that shall disable the appropriate chemical feeder(s) and energize an alarm circuit in the event of:

Electrode failures
Chemical feeder malfunctions
Improper valving of recirculation system
Manual override of automatic control by untrained or unauthorized personnel
Depletion of chemical supply

Units incorporating mechanical-type overfeed timers shall not be considered equal. All components of the Controller shall be serviceable by a local factory authorized service technician, a factory authorized service technician shall be available locally, and replacement components shall be available within 24-hours from the factory through the local service technician.

UL Listed: Controller shall be UL listed as applicable.

Bleach feed system: Include stenner feed pumps, and injectors as the regular accessory product of the controller supplier. Contractor to provide drums of bleach adequate for 30-days beyond substantial completion.

Acid feed system: Include stenner feed pumps, and injectors as the regular accessory product of the controller supplier. Contractor to provide Acid stock and an initial 80-gallon supply.

Flow Meter: The flow meters shall be provided by the Contractor. The main pool circulation flow meter shall me a Signet paddle-wheel style digital output flow meter with a remote display (because the pipe where it is installed is at the ceiling of the filter room). There shall also be a pitot tube type meter with accuracy of +/- 5% of the duty point placed on each of (1) the water feature feed, (2) the slide feed return.

Gauges: In addition to the filter face piping gauges as supplied with the filter system, there shall be oil-filled anti-shock pressure or vacuum gauges (as applicable), Trerice or equal (stainless steel or nylon case) on the pump suctions and discharges (all pumps). Each gauge connection shall be fitted with a pet-cock on a tee to check water flow. The gage on the pump discharge shall be placed upstream of the discharge valve. The gauge on the pump suction shall be mounted between the strainer basket and the pump suction.

ULTRAVIOLET DISINFECTION EQUIPMENT

Shall operate within the medium-pressure UV spectrum required to provide constant disinfection, inactivation of bacteria, algae, molds, viruses and destruction of Monochloramines, Trichloramines, and Dichloramines. Ultraviolet Lamp/Chamber and spectra Control Panel by Engineered Treatment Systems, ATG-Willand, or Hallavia. The Ultraviolet System shall be provided in a complete package to include: 316L Stainless Steel Chamber, Spectra Control System located in a NEMA 12 rated panel, Medium Pressure Bulb(s) designed to emit wavelengths within the UVC electromagnetic spectrum, strainer basket, automatic wiper system, and project commissioning by a factory-trained technician. Sizing shall match flow requirements of the filtration system as indicated in the manufacturer's documentation. The system shall be sized to emit a minimum dose of 60 mj/cm2, with indicated flow rates.

NOT FOR BIDDING

PART 3 - EXECUTION:

COORDINATION:

The Contractor shall carefully coordinate the placement of all equipment with the installation of piping and filtration systems. Install all necessary power feeds, receptacles and interconnecting wiring and devices for a complete and operable system. The initial supply of acid and hypochlorite shall be furnished by the Contractor. Connection and start-up are the total responsibility of the Contractor. The Contractor shall pay the costs for the water to fill the pools until accepted by the Owner. Any subsequent draining and refilling required for the completion of the work will be at the cost of the Contractor. Initial stabilizing of the pool water shall be performed by a qualified pool operator/technician under the direction of, and at the cost of, the Contractor. The Chemical Monitoring and Control supplier shall assist the Contractor in the coordination of this work. The cost of the field training by the system rep shall be paid by the Contractor as part of his purchase price for the equipment.

INSTALLATION:

The installation shall be in strict conformance with the manufacturer's printed instructions. Installation, by an authorized manufacturer's representative, while not required, is encouraged. If installation is not performed by an authorized manufacturer's representative, the Contractor shall provide for 8 hours of on-site representation by the manufacturer's authorized representative to supervise the installation of the equipment.

Pipe sample waste lines to the downstream side of the final throttling valve. The supply side of the probe holder shall be connected downstream of the filters but upstream of the final throttling valve. Protect the upstream and downstream lengths on the main pool circulation line at the flow meter to be free of interruptions, penetrations, and other items that impair the accuracy of the flow meter. All high points in all piping shall be fitted with a tap with manual thermoplastic valve (1/2" minimum size) for air-relief. Pipe tubing to floor drains as directed. For pipes running above 5-feet from the floor, place the ball valve at 48-inches or lower, anchoring the valve to the wall or other equipment, extending the tubing beyond.

POOL START-UP:

The Contractor shall notify the Engineer prior to filling any pool within the project. The start-up of the filtration system and chemical feed system shall be witnessed by the Engineer and manufacturer's representatives of associated equipment. The Contractor shall give a seven (7) day notice to all parties concerned.

WARRANTY:

Manufacturer and Contractor warrant the Controller Sanitizing System to be free of defects in workmanship and material for 2 years from date of acceptance or until the beginning of the 3rd summer season, in the case of an outdoor pool, whichever is longer.

END OF SECTION 131530

NOT FOR BIDDING

(PAGE LEFT BLANK)

NOT FOR BIDDING

SECTION 131540 - PUMPS

PART 1 - GENERAL

RELATED DOCUMENTS

Drawings and general provisions of the Contract, including General Conditions, apply to work of this section.

DESCRIPTION OF WORK

This section of the specifications and related drawings describe requirements pertaining to pool pumps and accessories.

SUBMITTALS

Make submittals as required in the Mechanical General Provisions Section and Division 1, Submittals. Pump curves giving the flow-head curve, NPSHR, brake horsepower and efficiency over the entire operating range of the pumps shall be submitted. Curves shall be from units identical to pumps to be supplied which have undergone certified testing. Pumps which do not have all of the required data will be rejected upon submission.

Provide operation and maintenance data as required in the Mechanical General Provisions Section and the Operation and Maintenance Data Section.

TEST-AND-BALANCE

Refer to the Test-and-Balance requirements given in Section 131500,

SINGLE SOURCE RESPONSIBILITY

All pumps furnished for the project in excess of 5 HP shall be the product one manufacturer unless noted otherwise. Motors, couplings, and other accessories shall be furnished with the pumps and shall be the American-made standards of the pump manufacturer. As a point of information only, the Engineer utilized curves published by Paco Pump in the selection of the sizes, duty points, and general requirements for the pumps.

Any pump larger than 1 hp must be installed with a motor starter (normally furnished under Division 16).

The pumps shall not be furnished as part of any proposed pool equipment vendor's package; but shall be supplied by a direct authorized manufacturer's agent or representative with both sales and service capabilities within the region of the project. The designation of this capability shall be included in the submittals.

There are two different styles of pump on this project. The filter feed pumps shall be PACO general-service end-suction pumps, bronze fitted, single stage, centrifugal pump. The Slide feed pumps are vertically-mounted inline pumps. The cast iron base mounting must be furnished as an integral part of the manufactured unit.

NOT FOR BIDDING

QUALITY ASSURANCE

The pumps shall provide the flow rate required at the conditions specified on the Drawings. The engineer shall have the right to reject units that run on operating curves that would be a detriment to the intended function. Such characteristics shall include duty points that are too far to the left or right on the curve, a curve that is not steep enough to assure a predictable duty point, or unusually shaped curves. The shut-off head shall be at least 15-feet above the duty point. The NPSHr shall not exceed 10-ft of H2O or as otherwise listed in the Drawings for each unit. The intent of these provisions is to allow for maximum opportunity to various suppliers as long as the performance can be met at the stated horsepower, while conforming to this specification. Documentation of proper performance and compliance is the sole responsibility of the Contractor. All pump manufacturers must submit documentation that their impellers conform to current NSF materials criteria and that the impeller materials are suitable for this swimming pool application.

PART 2 - PRODUCTS

PUMPS

Pump Description: Pumps shall be PACO general-service end suction pumps, or vertically-mounted inline, as shown, close-coupled, conforming to the standards referenced, except as herein modified. Each pump shall have the capacity indicated on the Drawings. Refer to the Drawings for the specific field requirements of each unit covered by these specifications. Generally, the pump parts are to be the standard product of the manufacturer for the type pumps specified and the intended service. The pumps shall be bronze fitted with mechanical seals. All materials shall be suitable for the intended use, pumping stabilized pool water at 86-degrees. Flanges shall be 125 psi rated. Manufacturer shall document their impeller product's stability in response to the removal of lead as required by the NSF.

Coatings: Pumps shall be coated on wetted parts and on exterior with Skotchkote 134, fusion bonded epoxy by Fusecoat.

Pump Performance: The duty points shall hit the curve in the middle 30%; there shall be a minimum rise to shut-off of 15-feet; the maximum NPSHr at the duty point shall be 10-feet at a temperature of 86º F. The motor shall be sized to be non-overloading at any point on the curve (Not using the Service Factor). Pumps shall be 1750 RPM maximum, unless otherwise stated in the drawings. The motor horsepower rating shall not be reduced from that shown even if a smaller motor appears to work.

Noise: Continuous operation within noise guidelines of the Hydraulic Institute and OSHA.

Drive Motor: The motors shall be a NEMA high-efficiency type and be the accessory product of the pump manufacturer and shall be manufactured in the United States by a company regularly engaged in the manufacturing of pump motors such as General Electric, U.S. Motors, Westinghouse, or equivalent. The motors shall be non-overloading over the full range of the pump curve. The motors shall conform to the following:

Type:	Open-Drip-Proof
Volts:	Coordinate with Electrical Drawings and Division 16

NOT FOR BIDDING

Phases:	3-phase
Service Fact.:	1.15
Insulation:	NEMA B, 40ºC Rise
Starting Method:	Full voltage
Thrust Protection:	Per pump manufacturer's recommendation

Basket Strainers: Basket Strainers are required, but shall not be supplied with the pumps. Strainers shall be all fiberglass with transparent lid equal to Nemato or Mer-Made (201-784-3523), or all stainless steel equal to Neptune Benson (800-832-8002). The downstream flange shall be eccentrically reduced to match the size of the pump suction. The upstream flange shall match the incoming pipe size shown. A spare basket shall be provided for each strainer. The manufacturer shall provide a vacuum gauge tap on the pump-side of the apparatus.

Valves: See Section 131520 for the valve specifications. The contractor shall provide a butterfly valve upstream of the basket strainer with a lever actuator; another butterfly valve on the discharge side of the pump (after the increaser to bring the pipe size to the required downstream pipe size) with a hand-wheel actuator; and a check valve on all pump discharges. See Section 131510 for gauge requirements.

PART 3 – EXECUTION

INSTALLATION

Verify Pump Pit Dimensions: Verify the dimensions of the pump pit as shown on the drawings based on the complete assembled dimension requirements and working room for the equipment being furnished, The size of the pit will be adjusted as need at no cost to the Owner as submitted by the contractor and approved by the engineer.

Exact placement of pump bases will depend upon the products utilized. Locate the anchors based on the location and bolt patterns of the piping, the fittings utilized, and the pump dimensions. Minor variations in configuration may be approved based on the Contractor's Shop Drawings submitted. The Contractor's submittal will include a complete, dimensioned layout sketch of all equipment and piping based on the actual materials proposed to be furnished.

Embed anchor bolts firmly through new pump pads and into concrete floor of building. Anchor bolts shall be of sufficient length to provide 1/4" projection through nut after assembly. The motor base shall be set in a manner to allow removal of the bolts to allow sliding the motor back for removal.

Clean floor and roughen to insure a good bond between the pump pad and the floor; and clean and roughen new pad to insure a good bond between pump base grouting and pad.

Initially align pumps in accordance with manufacturer's written recommendations. After pump has been run under actual operating conditions, adjust alignment in accordance with manufacturer's recommendations.

After initial alignment is complete, grout pump base to the concrete pad with non-shrink grout. Completely fill all void space beneath the case and finish in a neat workmanlike manner.

NOT FOR BIDDING

After grout has set, tighten bolts, check alignment, and adjust if necessary.

The installation of all pumps shall be performed by tradesmen with documented experience installing the type pumps specified.

FIELD QUALITY CONTROL

Provide services of factory representatives for initial operation of all equipment.

Operate the pump for a minimum of four hours at each of two filter cycles during testing to insure satisfactory performance. Re-check alignment and setting; check power consumption; and make all necessary adjustments to provide operations within manufacturer's specifications. Provide written certification from the manufacturer's representative of proper installation and operation.

Operate and check-out entire electrical and control systems. Provide complete O & M Manuals for all equipment to Owner. Include winterization requirements.

CLEAN-UP & TESTING

Thoroughly clean entire system including wet wells, pits, and piping. Remove all debris from site. The equipment proposed to be furnished and installed shall be of identical characteristics as equipment used for testing and certifying on submitted curves and data. The Contractor shall perform field testing on all pumps to verify performance, including the physical inspection and verification of the proper impeller trim. Using the suction and discharge gauges and the system flow meter, the contractor will generate the pump curve at a minimum of 4 points, one of which is shut-off. Amp readings shall be taken at all 4 points as well. The testing shall be performed in the presence of the engineer. See additional Test-and-Balance requirements in Section 131500.

END OF SECTION 131540

NOT FOR BIDDING

SECTION 131590 - FIBERGLASS WATER SLIDES

PART 1 - GENERAL:

RELATED DOCUMENTS:

Drawings and General Provisions of Contract, including General Conditions, apply to work of this section.

WORK INCLUDED:

As a point of information, the slides shown on the Drawings are layouts provided by Whitewater West USA, Ltd. The Base Bid layout shows a slide package that contains 2 Body Slides: one is an open flume "Giant Slide" with a run of 391-feet; the other is an enclosed tube "Aquatube" with a run of 257-feet from a 46.3-foot tower (measured from water surface in the plunge pool). The Add-Alternate package includes a second pair of speed slides: One is a "Freefall" with a run of 156-feet and the other is a "Freefall-Plus" with a run of 187-feet, from the same tower as the Base-Bid body slides. The tower and stairs for the set of all 4 slides is to be included in the Base-Bid. The maximum water flow required for the Base-Bid Slides shall be 1,350-gpm; the maximum flow required for the Add-Alternate Speed Slides shall be 1,000 gpm. If there is a discrepancy with the flow rates specified, Pre-Bid approval must be sought by the vendor/bidders. The Engineer makes no warranty as to the completeness of the layouts suggested, and it is the total and complete responsibility of the slide manufacturer to design, fabricate, and supervise and approve the installation of the water slides. Furnish and install fiberglass water slides as schematically indicated on the Drawings, specified herein, and as necessary for proper completion, including, but not necessarily limited to:

All fiberglass flume design and installation.

All flume structural support systems design and installation by slide mfr. or contractor. All steel is galvanized and painted.

Foundations design and installation by slide mfr.

Ride testing and certification.

Operation and maintenance manuals.

Slide Pump and Pool Mechanical systems, are by the general contractor.

Amusement Ride permitting through the State of Delaware as required.

Install separate valved pipes from the ground beneath the tower to each set of slides. The valves shall be at ground level or otherwise easily accessible. The pipes will be painted to match tower structure. The Contractor shall retain complete responsibility for coordination of trades, and for determining the division of work amongst the trades for a complete and properly functioning system. The towers are shown schematically for detailing and fabrication by the slide mfr., and installation by qualified steel fabricator, erectors, or other subcontractors under this contract.

NOT FOR BIDDING

QUALITY ASSURANCE:

Qualifications of Suppliers and Personnel:

The water slide flume fabricator shall have not less than three (5) years experience in the design and fabrication of fiberglass water slides of the types described, as a continuous corporate identity. All flumes shall be the product of one manufacturer. The supplier shall provide appropriate certificates of general liability and product liability insurance, and a written quality assurance program.

The water slide erection supervisor shall have not less than three (3) years experience in the erection of fiberglass water slides.

Any welding shall be performed by operators who have been qualified as prescribed in "Qualification Procedure" of the American Welding Society, and welding shall be performed only under Fire Marshal permit.

Acceptable Manufacturer's: The flume shall be the product of one of the following manufacturers:

Whitewater USA (800-775-4337)
Proslide Technology (613-526-5522)
Splashtacular (800-844-5334)

COORDINATION:

Coordinate all work of this Section with the work of others and cooperate fully with other contractors on the site.

CODES AND STANDARDS:

In addition to complying with all applicable codes and regulations, comply with pertinent recommendations as follows:

Water slide flumes shall conform to requirements of the appropriate State Department of Health, and shall comply with "WWA Considerations for Operating Safety", 1989, as published by the World Water Park Association.

"Specification for the Design, Fabrication, and Erection of Structural Steel for Buildings" of the American Institute of Steel Construction.

"The U.S. Consumer Product Safety Commission (CPSC) standards for pool slides."

"Code for Welding in Building Construction" of the American Welding Society.

"Specifications for Architecturally Exposed Structural Steel" of the American Institute of Steel Construction.

"Manual of Standard Practice for Detailing Reinforced Concrete Structures", Publication ACI 315-74 of the American Concrete Institute.

NOT FOR BIDDING

"Structural Concrete for Buildings", Publication ACI 301-72 of the American Concrete Institute.

Where provisions of pertinent codes and standards conflict with this Specification, the more stringent shall govern.

Comply with all local and state Building Codes.

SUBMITTALS:

Within sixty (60) days after award of Contract, and before any materials are delivered to the job site, submit the following:

Slide path design with X, Y and Z (elevation coordinates).
Flume component details, including interface at slide entry and exit.

Flume, tower connection details, and structural support system calculations and details.

Mechanical schematic and water flow requirements.

Schematic for slide and pool wall interface.

Recommended details for slide and building wall interface.

Show all shop erection details including cuts, copes, connections, holes, threaded fasteners, rivets and welds.

Show all welds, both shop and field, by the currently recommended symbols of the American Welding Society.

The slide manufacturer shall supply clear requirements to the Owner what depth and configuration of the receiving pool(s) and all other components are required and compatible with all known safety standards for the manufacturer's designed products.

All design drawings by the manufacturer shall carry the seal of a Delaware registered engineer.

GUARANTEE/WARRANTY:

All work of this Section shall be warranted against all defects of material and/or application for a period of two (2) years from date of acceptance or through the second operating season, whichever is shorter. Any failures that may occur within this warranty period, due to defective design, installation, and/or materials, shall, upon written notification of such failure, be immediately repaired or replaced.

PART 2 - PRODUCTS:

GENERAL:

NOT FOR BIDDING

The products to be furnished and installed include the complete design of flume systems as well as their actual components and tower, stairs, foundations, and supports. The designs shall be based on the latest industry and professional standards for a safe yet entertaining system and reliable components.

FIBERGLASS FLUME COMPONENTS:

Fiberglass Laminate Materials:

Gelcoat: Cooks' or equal, NPG (neopetryl-Glycol) with U.V. inhibitors. 18 to 20 mils thick ride surface, 20 mils exterior coating.
Resins: General Fiberglass or equal, Isophthalic with 2 to 1 ratio with layers of chop and 18 oz. mat.

Structure: Standard flume section shall be 3/16" thick, weight 1.5# per sq. ft. Flanges shall be 3/8" thick, "L" type.

Joints, Connections and Seams:

Flume to flume joints shall be fastened with 3/8" stainless steel bolts, washers (2 per bolt) and self-locking nuts.

Flume to support system connections shall be made with stainless steel hardware, and shall be connected separately from water slide section connections.

Fiberglass seams shall be made up using polyurethane, non-shrink waterproof caulking to be provided by fiberglass slide manufacturer.

Color:

The Gel-coat color shall be as selected by the Engineer from the manufacturer's standard selections, with possibly two different colors top and bottom (inside and outside) of each flume. Steel color shall be as selected. Two separate colors will be selected for the primary structural components and the trim such as railing.

RIDE CONFIGURATIONS:

The system shall be supplied as detailed by the supplier, but meeting the general requirements and as schematically indicated on the Drawings. The ride path must be included in the sealed engineering submittals.

Required Components:

All water slide design drawings, calculations and components shall be furnished including the following components:

Entry tray or pool; pool entry sections; all flume sections with factory pre-drilling and specials as necessary to conform to the geometry constraints in a safe way; hardware, waterproof caulking as required for seams; tower, supports, and foundations; valves and piping from ground to tower.

NOT FOR BIDDING

FLUME STRUCTURAL SUPPORT SYSTEM:

Components:

The flume structural support system shall consist of the design, calculations and components of all elements necessary to safely and securely support the fiberglass water slides, including, but not limited to:

Exterior concrete footings, foundations and columns, anchor bolts, and column end plates.
Structural steel support columns, arms, yokes and cross bracing.
Connecting hardware.

Design:

Structural supports systems shall be designed to safely support these facilities taking into consideration the following design criteria.

Seismic zone:	as applicable
Wind speed:	80 mph
Snow load:	10 psf
Live load:	as appropriate
Soil bearing:	2,000 psf (Note: G.C. should verify if rock is encountered.)
Frost Depth:	30-inches

Other criteria as may be required by local regulatory authorities or as reasonably required for design under sound engineering principles.

Drawings, Calculations, and ride path must be submitted, sealed by a Missouri Registered Engineer.

Pipe Columns:

All pipe columns shall meet the requirements of ASTM A-53, seamless, Grade B.

Tubing:

All rectangular or square tubing shall meet the requirements of ASTM A-500, Grade B.

Bolts and Nuts:

Use all high strength bolts meeting the requirements of ASTM A-325. Use high strength friction bolts for all bolted connections unless otherwise indicated. Make bolt holes 1/16 inch larger than nominal bolt diameter.

NOT FOR BIDDING

Machine Bolts and Anchor Bolts:

All machine bolts and anchor bolts shall meet the requirements of ASTM A-307.

Concrete: Concrete shall conform to 4,000 psi mix design.

Tower and Stairway System:

Stairway will be 4-feet wide (clear, handrail to handrail). Tower column, cross bracing, tension rods, stairway supports, stairway sections and handrailing shall be hot-dip galvanized and painted, designed and prefabricated for bolt-up installation. Guardrailing shall be painted steel or thermoplastic by Avcon. Handrails shall be aluminum.

Prefabricated stairway sections shall include stringers and stair treads. All stairs and landings shall be non-slip thermoplastic thread systems of the standard manufacturer's design. Stairway systems, handrails and guardrails shall comply with all applicable codes, including closed stair risers.

Concrete foundations, columns, and flatwork shall be designed by the slide manufacturer. Install flatwork and foundations under the supervision and approval of the slide manufacturer. All other structural components shall be the prefabricated components of the slide manufacturer, ready for erection by the Contractor under the slide manufacturer's supervision and approval. The Slide Installer shall provide the final pipe connections.

The maximum velocity in piping shall be 8 fps.

PART 3 - EXECUTION:

SURFACE CONDITIONS:

Inspection:

Prior to installation of the work of this section, carefully inspect the installed work of other trades and contractors and verify that all such work is complete to the point where this installation may properly commence.

Verify that fiberglass slides and structural support systems are fabricated and erected in strict accordance with the original design, the approved Shop Drawings and the referenced standards.

Discrepancies:

In the event of discrepancy, immediately notify the Engineer.

Do not proceed with fabrication or installation in areas of discrepancy until all such discrepancies are fully resolved.

Coordination:

NOT FOR BIDDING

The Contractor shall carefully determine the proper division of work between his suppliers and subcontractors to assure qualified and complete designs, shipments, and installation of all components intended under the Contract Documents. This contractor shall also coordinate with all other contractors on the site.

ERECTION:

General:

Erect all fiberglass slides and structural support systems in strict accordance with the approved Shop Drawings and referenced standards. Complete mechanical installation from the pipe stubbed up into the tower.

Shop Cleaning and Priming:

Shop paint all structural steel one coat (with galvanized steel this is normally referred to as an "intermediate coat") of Tnemec Series 27 Typoxy, 6 mils DFT.

Final Field Painting: Wire brush and re-prime all damaged areas. Apply final coat of Tnemec Series 74 Endura-Shield (Aliphatic Acrylic Polyurethane) to 3 mils DFT, for a final dry film thickness of 9 mils.

Thoroughly clean all steel to be encased in concrete.

Installation of Footings and Foundations:

Foundations shall be installed in strict accordance with the approved Shop Drawings. Footings shall use auger pier method or spread footings as detailed by the slide mfr. Concrete piers shall terminate 6" above finished deck or grade with 3/4" chamfered edges.

WELDING:

General:

For details of joints, comply with requirements for AWS joints accepted without qualification tests. Use ASTM A-233, E-70 series electrodes. Follow applicable sections of AWS specifications.

Types of Welds:

Unless other noted: Make all fillet welds 3/16 inch minimum. Make all butt welds full penetration welds, using back-up or chip and back weld. Erect all fiberglass water slides and structural support systems in strict accordance with the approved Shop Drawings and all pertinent regulations and standards.

Tolerance:

Align all structural steel straight, plumb, and level with a tolerance of one in 500.

Touch-up and Final Painting:

NOT FOR BIDDING

After erection is complete, touch-up all shop priming coats damaged during transportation and erection, and prime all field welds, using the priming paint specified for shop priming. Finish paint all steel components with Tnemec 74.

Fiberglass Joints:

All flange to flange connections shall be made utilizing the waterproof caulking supplied by the fiberglass manufacturer and shall be joined in such a way as to provide for safe, smooth, and matless ride. Use rubbing compound as necessary to polish flume and joints.

Clean-Up:

Upon completion of the work, immediately remove all fiberglass, structural support system materials, debris and rubbish occasioned by this work.

Start-Up and Testing:

Provide the services of a manufacturer's representative to perform clean-up, joint finishing, surface rubbing and waxing, start-up, testing, and Owner training for a period of 2 days or 16 hours in one trip and for 1 day or 8 hours at a time later (within 1 year of completion) at a mutually convenient date. These service periods shall be in addition to any required warranty work.

END OF SECTION 131590

NOT FOR BIDDING

SECTION 133423.16 - FABRICATED CONTROL BOOTHS

PART 1 - GENERAL

1.1 RELATED DOCUMENTS

A. Drawings and general provisions of the Contract, including General and Supplementary Conditions and Division 01 Specification Sections, apply to this section.

1.2 SUMMARY

A. Section includes fabricated steel ticket booths.

1.3 ACTION SUBMITTALS

A. Product Data: For each type of product.

1. Include construction details, material descriptions, dimensions of individual components and profiles, and finishes for control booths.

B. Shop Drawings: For control booths. Include plans, elevations, sections, details, accessories, and fastening and anchorage details, including mechanical fasteners.

1. Anchor-Bolt Plans: Submit anchor-bolt plans and templates. Include location, diameter, and projection of anchor bolts required to attach control booths to foundation. Indicate post reactions at each location.

C. Samples for Initial Selection: For each type of exposed finish.

D. Samples for Verification: For each type of exposed finish in manufacturer's standard sizes.

1. Include Samples of wall panels and accessories to verify finish selection.

1.4 INFORMATIONAL SUBMITTALS

A. Sample Warranty: For special warranty.

1.5 CLOSEOUT SUBMITTALS

A. Maintenance Data: For control booths to include in maintenance manuals.

NOT FOR BIDDING

1.6 COORDINATION

A. Cast-in Anchorage: Coordinate installation of anchorages for control booths. Furnish sleeves, concrete inserts, anchor bolts, and items with integral anchors that are to be embedded in concrete bases. Include setting drawings, templates, and directions for installing anchorages. Deliver such items to Project site in time for installation.

1.7 WARRANTY

A. Special Warranty: Manufacturer agrees to repair finish or replace control booths that fail in materials or workmanship within specified warranty period.

1. Warranty Period: Five years from date of Substantial Completion.

PART 2 - PRODUCTS

2.1 PERFORMANCE REQUIREMENTS

A. Structural Performance: Control booths shall withstand the following loads and stresses within limits and under conditions indicated according to ASCE/SEI 7:

1. Loads: As indicated on Drawings.

B. Thermal Movements: Allow for thermal movements from ambient and surface temperature changes.

1. Temperature Change (Range): 120 deg F (67 deg C), ambient; 180 deg F (100 deg C), material surfaces.

C. Electrical Components, Devices and Accessories: Listed and labeled as defined in NFPA 70, by a qualified testing agency, and marked for intended location and application.

D. Safety Glazing Products: Category II materials complying with testing requirements in 16 CFR 1201.

1. Subject to compliance with requirements, obtain safety glazing products permanently marked with certification label of acceptable to authorities having jurisdiction.

E. Regulatory Requirements: Comply with applicable provisions in the U.S. Architectural & Transportation Barriers Compliance Board's ADA-ABA Accessibility Guidelines, ICC A117.1 and the Delaware Architectural Accessibility Standards.

2.2 FABRICATED STEEL CONTROL BOOTHS

A. General: Fabricate control booths from an integrated set of mutually dependent components to form a completed assembly, ready for installation on Project site.

NOT FOR BIDDING

1. Manufacturers: Basis of Design is Par-Kut Industries, pk88MOD, or subject to compliance with requirements, available manufacturers offering products that may be incorporated into the Work include, but are not limited to the following:

    a. AustinMohawk and Company, Inc.
    b. B.I.G. Enterprises, Inc.
    c. Canada Kiosk.
    d. Delta Scientific Corporation.
    e. Keystone Structures, Inc.
    f. Little Buildings, Inc.
    g. MFI Mardan Fabricators.
    h. Parking Booth Company, Inc.
    i. Porta-King Building Systems.

B. Building Style: Standard square corners.

C. Structural Framework: Fabricated from 2-by-2-by-0.075-inch (50-by-50-by-1.90-mm) steel structural or mechanical tubing. Connect framework by welding.

D. Doors: Sliding door on one side.

1. Sliding Door: Top suspended from aluminum track with ball-bearing rollers; 1-3/4 inches (44 mm) thick; tubular-frame design fabricated from [clear-anodized aluminum] [galvanized steel]; with top half of door glazed. Equip door with deadlock, lock support, guide hardware, and full weather stripping.

    a. Glazing: Fixed unit with clear tempered insulated glass.
    b. Deadlock: Mortised, laminated-hook bolt type with removable cylinder capable of being master keyed.
    c. Minimum 32” clear opening

E. Windows: Sliding extruded-aluminum sash frames glazed with clear tempered insulated glass.

1. Frame Finish: To match finish of booth.
2. Operable Windows: Equip windows with cam locks, weather stripping, and nylon ball-bearing rollers.
3. Corner Shape: Square.

F. Wall Panel Assembly: Assembly consisting of exterior face panel fabricated from 0.079-inch (2.01-mm) nominal-thickness, galvanized-steel sheet; and interior face panel fabricated from 0.052-inch (1.32-mm) nominal-thickness, galvanized-steel sheet; with 2-inch- (51-mm-) thick, polystyrene board insulation in cavity between exterior and interior face panels.

G. Base/Floor Assembly: 2-inch- (51-mm-) high assembly consisting of perimeter frame welded to structural framework of booth. Fabricate frame from 2-by-2-inch (51-by-51-mm) galvanized-steel structural tubing; 0.108-inch (2.74-mm) nominal-thickness, C-shaped, galvanized-steel sheet channels; or galvanized structural-steel angles. Include anchor clips fabricated from 1/4-inch- (6-mm-) thick galvanized-steel plate, predrilled and welded to exterior of integral floor frame.

NOT FOR BIDDING

1. Finished Floor: 0.108-inch (2.74-mm) nominal-thickness, galvanized, rolled steel tread plate.

H. Flat Roof/Ceiling Assembly: Assembly consisting of exterior roof panels, interior ceiling panels, and insulation between exterior and interior panels; sloped to drain at booth perimeter.

1. Exterior Roof Panel: Fabricated from 0.079-inch (2.01-mm) nominal-thickness, galvanized-steel sheet; with painted finish, continuously welded seams.
2. Interior Ceiling Panel: Fabricated from 0.079-inch (2.01-mm) nominal-thickness, galvanized-steel sheet; with fiberglass insulation in cavity between ceiling and roof.
3. Insulated Exterior/Interior Panel: Fabricated from 0.028-inch (0.71-mm) nominal-thickness, galvanized-steel sheet faces and expanded-foam insulation core.
4. Canopy Fascia: Fabricated from 0.079-inch (2.01-mm) nominal-thickness, galvanized-steel sheet, of manufacturer's standard design.

   a. Height: 6 inches (152 mm).
   b. Overhang: 3 inches (76 mm) beyond face of wall below.

I. Work Counters: Full width of control booth, on two (2) sides, reinforced; with 16-inch- (406-mm-) wide storage drawer below each counter and rear (2) access opening for electrical cords at each rear corner of counter.

1. Material: 0.079-inch (2.01-mm) nominal-thickness, galvanized-steel sheet.
2. Depth: 18 inches (457 mm).

J. Electrical Power Service: 100-A, 120/240-V ac, single-phase, three-wire service, with 12 circuit-breaker panel; located under one end of work counter. Run copper wiring in 1/2-inch (13-mm) EMT conduit.

1. Provide four (4) 120-V ground fault circuit interrupter (GFCI) power receptacle(s).

K. Telecom/Data: 12” x 12” wall mounted junction box, under counter, for incoming telecom/data service. 3/4” conduit raceways to four (4) locations under counter for data jacks by others.

L. Lighting Fixtures: Two ceiling-mounted fluorescent lighting fixture(s), 48 inches (1219 mm) long, with acrylic lens and two 40-W lamps in each fixture. Provide single-pole switch mounted adjacent to door to control lighting fixture.

M. Heating Unit: Wall mounted, thermostatically controlled, 240-V, 4200-W electric heater with fan-forced operation and with capacity of not less than 5000 Btu/h (1465 W). Enclose in enameled-steel cabinet and mount under work counter.

N. Cooling Unit: Roof-mounted, thermostatically controlled air conditioner with cooling capacity of not less than 13,500 Btu/h (3956 W). Enclose in enameled-steel cabinet.

O. Accessories: Provide the following for each control booth:

1. Two exterior stainless-steel counter.
2. Floor-mounted] safe.
3. Ventilation fan.

NOT FOR BIDDING

P. Anchorage: Postinstalled anchors fabricated from non-ferrous or corrosion-resistant materials, with allowable load or strength design greater than or equal to the design load as determined by testing conducted by a qualified testing agency.

Q. Materials:

1. Zinc-Coated (Galvanized) Steel Sheet: ASTM A 653/A 653M, commercial quality, G90 (Z275) coating designation; mill phosphatized.
2. Galvanized, Rolled Steel Tread Plate: ASTM A 786/A 786M, rolled from steel plate complying with ASTM A 572/A 572M, Grade 55 (380); hot-dip galvanized according to ASTM A 123/A 123M.
3. Steel Structural Tubing: ASTM A 500/A 500M, Grade B.
4. Steel Plates, Shapes, and Bars: ASTM A 36/A 36M.
5. Steel Mechanical Tubing: ASTM A 513, welded-steel mechanical tubing.
6. Zinc-Coated (Galvanized) Steel: Hot-dip galvanized according to ASTM A 123/A 123M.
7. Aluminum: Alloy and temper recommended by aluminum producer and manufacturer for type of use and finish indicated, and as follows:

   a. Sheet: ASTM B 209 (ASTM B 209M).
   b. Extruded Shapes: ASTM B 221 (ASTM B 221M).
   c. Rolled Tread Plate: ASTM B 632/B 632M, Alloy 6061-T4 or Alloy 6061-T6.

8. Stainless-Steel Sheet: ASTM A 666, Type 304.
9. Plywood: DOC PS 1, Exterior grade.
10. Particleboard: ANSI A208.1, Grade M-2.
11. Clear Tempered Float Glass: ASTM C 1048, Kind FT, Condition A, Type I, Class 1, and Quality q3; 6 mm thick.
12. Clear Insulating Glass: ASTM E 2190. Factory-assembled units consisting of two lites of 2.5-mm-thick clear float glass, ASTM C 1036, Type I, Class 1, Quality q3, and dehydrated air space, with a total overall unit thickness of 5/8 inch (16 mm) and with manufacturer's standard dual seal.

R. Finish: Immediately after cleaning and pretreating, apply manufacturer's standard two-coat, baked-on finish consisting of prime coat and thermosetting topcoat.

1. Color and Gloss: As selected by Architect from manufacturer's full range.

2.3 FABRICATION

A. Factory fabricate control booths completely.

B. Factory preglaze windows and doors.

C. Factory prewire control booths, ready for connection to service at Project site.

D. Fabricate control booths with removable lifting eye centered in roof.

E. Accessible Control Booths: Where indicated to be accessible, fabricate control booths as follows:

NOT FOR BIDDING

1. Provide service windows located no higher than 34 inches (865 mm) above exterior grade.
2. Provide door opening with minimum 32-inch (813-mm) clear width.
3. Provide minimum 60-inch (1525-mm) clear turning spacing within the booth.
4. Provide minimum 27-inch (685-mm) clearance beneath interior work surfaces. Locate work surfaces 28 inches (710 mm) minimum and 34 inches (865 mm) maximum above the floor.
5. Locate controls and operable parts no lower than 15 inches (381 mm) and no higher than 48 inches (1219 mm) above the floor where reach is unobstructed. Where side reach is obstructed, locate controls and operable parts no lower than 15 inches (381 mm) and no higher than 46 inches (1219 mm) above the floor.

PART 3 - EXECUTION

3.1 EXAMINATION

A. Examine substrates, areas, and conditions, with Installer present, for compliance with requirements for installation tolerances, including concrete bases; accurate placement, pattern, and orientation of anchor bolts; critical dimensions; and other conditions affecting performance of the Work.

B. Examine roughing-in for electrical and communication systems to verify actual locations of connections before control booth installation.

C. Prepare written report, endorsed by Installer, listing conditions detrimental to performance of the Work.

D. Proceed with installation only after unsatisfactory conditions have been corrected.

3.2 INSTALLATION

A. Install control booths according to manufacturer's written instructions.

B. Accessible Control Booths: Install with interior floor surface at same elevation as adjacent paved surfaces.

C. Set control booths plumb and aligned. Level baseplates true to plane with full bearing on concrete base.

D. Fasten control booths securely to concrete base with anchorage indicated.

E. Connect to electrical power service and data systems.

F. Perform startup checks of heating and cooling units according to manufacturer's written instructions.

NOT FOR BIDDING

3.3 ADJUSTING

A. Adjust doors, operable windows, and hardware to operate smoothly, easily, properly, and without binding. Confirm that locks engage accurately and securely without forcing or binding.

B. Lubricate hardware and other moving parts.

C. After completing installation, inspect exposed finishes and repair damaged finishes.

END OF SECTION 133423.16

NOT FOR BIDDING

(PAGE LEFT BLANK)

NOT FOR BIDDING