STATE OF DELAWARE
DEPARTMENT OF NATURAL RESOURCES AND ENVIRONMENTAL CONTROL
DIVISION OF PARKS & RECREATION

SWINGING BRIDGE MAINTENANCE REPAIRS

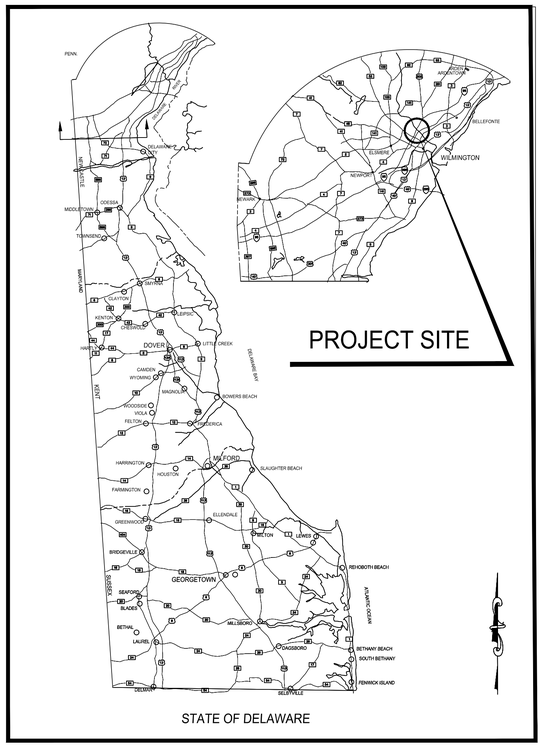

LOCATION MAP

PARKS PROJECT NO. WB-10

CONTRACT NO. 2014-WB-100

FEBRUARY 2014

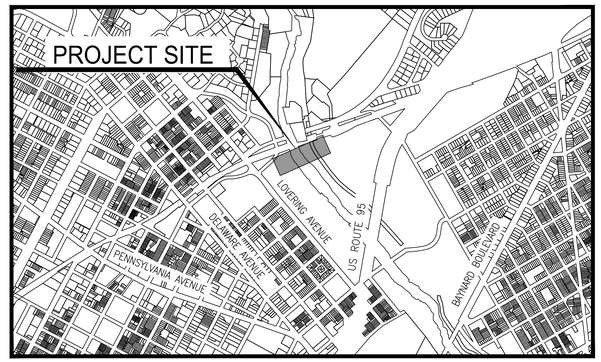

SITE MAP

SHEET INDEX FOR CONTRACT NO. 2014-WB-100

SHEET NO.:	TITLE
	COVER SHEET-SHEET INDEX
C1.1	PROJECT NOTES
C1.2	STAGING PLAN
C2.1	EXISTING BRIDGE STRUCTURE AND DETAILS
C2.2	DECK MAINTENANCE DETAILS
C2.3	BRIDGE SUPERSTRUCTURE REPAIR DETAILS
C3.1	BRIDGE NORTH APPROACH EROSION AND SEDIMENT CONTROL PLAN
C4.1	MAINTENANCE OF TRAFFIC PLAN

ARCHITECT & LANDSCAPE ARCHITECT

STAMP

HISTORIC ARCHITECT

STAMP

CIVIL ENGINEER

STAMP

STRUCTURAL ENGINEER

STAMP

MEP ENGINEER

STAMP

CLIENT

OFFICE OF DESIGN & DEVELOPMENT
DELAWARE DIVISION OF PARKS & RECREATION 89
KINGS HIGHWAY
DOVER, DELAWARE 19901
(302) 739-9231 (302)
739-7026 (FAX)

PROJECT NOTES

1. THIS CONTRACT IS TO BE CONSTRUCTED UTILIZING PORTIONS OF THE DELAWARE DEPARTMENT OF TRANSPORTATION STANDARD SPECIFICATIONS FOR ROAD AND BRIDGE CONSTRUCTION DATED AUGUST 2001 AND THE "STANDARD CONSTRUCTION DETAILS," INCLUDING ALL REVISIONS UP TO ADVERTISEMENT OF THIS PROJECT, UNLESS NOTED OTHERWISE IN THESE PLANS OR THE SPECIFICATIONS. ALL CONSTRUCTION IS TO BE IN ACCORDANCE WITH THE LATEST DELDOT STANDARD SPECIFICATIONS AND STANDARD CONSTRUCTION DETAILS, UNLESS OTHERWISE NOTED ON THE PLANS OR IN THE SPECIFICATIONS FOR THIS PROJECT, AND AS FOLLOWS. FOR THIS PROJECT, DIVISION 100 GENERAL PROVISIONS IN THE DELDOT STANDARD SPECIFICATIONS DOES NOT APPLY. THERE WILL BE NO MEASUREMENT FOR PAYMENT, UNLESS SPECIFICALLY STATED IN THE PLANS OR SPECIFICATIONS FOR THIS PROJECT

2. THE TERM "ENGINEER" AND/OR "ARCHITECT" NOTED THROUGHOUT THE CONTRACT SPECIFICATIONS SHALL REFER TO DNREC / STATE PARKS, OR HIS/HER APPOINTED REPRESENTATIVE.

3. BEFORE EXCAVATION IS STARTED IN AREAS OF UNDERGROUND UTILITIES, THE CONTRACTOR SHALL GIVE NOTIFICATION BY TELEPHONE BY CALLING "MISS UTILITY", TEL. (800) 282-8555. ALL EXISTING UTILITIES SHALL BE PROTECTED AND TEMPORARILY SUPPORTED OR RELOCATED AS NECESSARY TO COMPLETE THE WORK IN ACCORDANCE WITH THE PERTINENT UTILITY COMPANY REQUIREMENTS. KNOWN UTILITIES IN THE PROJECT AREA ARE SANITARY SEWER, UNDERGROUND ELECTRIC AND OVERHEAD LINES AND ARE SHOWN ON THE PLANS TO BE PROTECTED. THE CONTRACTOR SHALL VERIFY EXACT LOCATIONS OF ALL UTILITIES IN THE FIELD. ALL COSTS SHALL BE INCIDENTAL TO THE CONTRACT. ANY UTILITIES DAMAGED BY THE CONTRACTOR SHALL BE PROMPTLY AND FULLY RESTORED TO THE SATISFACTION OF DNREC AND UTILITY COMPANY.

4. THE CONTRACTOR SHALL DESIGNATE A PERSON WHO SHALL BE RESPONSIBLE FOR IMPLEMENTING AND MAINTAINING THE EROSION AND SEDIMENT CONTROL PLANS, A PERSON WHO SHALL BE RESPONSIBLE FOR IMPLEMENTING AND MAINTAINING THE TRAFFIC CONTROL PLANS, AND A PERSON WHO SHALL BE RESPONSIBLE FOR WORKER SAFETY. THE PERSON RESPONSIBLE FOR IMPLEMENTING AND MAINTAINING THE EROSION AND SEDIMENT CONTROL PLANS SHALL BE CERTIFIED BY DNREC FOR EROSION AND SEDIMENT CONTROL RESPONSIBILITY (CERTIFIED CONSTRUCTION REVIEWER). THE CONTRACTOR IS RESPONSIBLE FOR PROVIDING ENGINEER'S CERTIFICATION OF THE CCR INSPECTION REPORTS. THE ENGINEER SHALL BE LICENSED IN THE STATE OF DELAWARE.

5. THE CONTRACTOR IS RESPONSIBLE FOR SECURING THE AREA WITHIN THE LIMITS OF CONSTRUCTION TO PROHIBIT PUBLIC ACCESS UNTIL COMPLETION OF THE PROJECT. THE CONTRACTOR SHALL DELINEATE THE LIMITS OF CONSTRUCTION IN THE FIELD, PRIOR TO THE START OF WORK, BY MEANS OF SURVEY RIBBON OR OTHER MEANS APPROVED BY THE OWNER. THE CONTRACTOR'S PROCEDURE/METHOD FOR LIMITING ACCESS SHALL BE REVIEWED BY, AND COORDINATED WITH DNREC PRIOR TO THE START OF WORK. AT A MINIMUM, THE SITE SHALL BE SECURED WITH 8 FOOT TALL CHAIN LINK FENCE WITH LOCKING GATES. CHAIN LINK FENCE SHALL BE SECURED/SUPPORTED BY CONCRETE BASES OF SUFFICIENT SIZE SO AS TO PREVENT THE FENCE FROM FALLING ONTO ADJACENT ROADWAY AND PATHS OR FROM BEING DISMANTLED BY OUTSIDE FORCES. THE COST TO INSTALL AND MAINTAIN SITE SECURITY SHALL BE INCIDENTAL TO THE CONTRACT. BARRICADES AND ADVANCE SIGNAGE SHALL BE PLACED ALONG TRAILS AND/OR SIDEWALKS TO INFORM THE PUBLIC OF CLOSURES, AS SHOWN ON THE MAINTENANCE OF TRAFFIC PLAN AND AS DIRECTED BY DNREC.

6. THE CONTRACTOR IS SOLELY RESPONSIBLE FOR OBTAINING OFF-SITE SPOIL AREAS FOR LEGAL DISPOSAL OF EXCESS AND/OR UNSUITABLE MATERIALS AS NECESSARY IN ACCORDANCE WITH ALL FEDERAL, STATE, AND LOCAL REQUIREMENTS. ALL COST FOR PROCURING AND UTILIZING THE OFF-SITE SPOIL AREAS ARE TO BE INCIDENTAL TO THE CONTRACT.

7. THE LIMIT OF CONSTRUCTION SHALL BE AS SHOWN ON THE PLANS. THE CONTRACTOR SHALL NOT WORK OR TRESPASS OUTSIDE OF THE LIMIT OF CONSTRUCTION AS SHOWN ON THE PLANS WITHOUT THE WRITTEN APPROVAL OF DNREC.

8. BRIDGE MAINTENANCE REPAIRS ON THIS PROJECT WILL IMPACT EXISTING PEDESTRIAN ROUTES. ONE WEEK PRIOR TO PERFORMING SIDEWALK CLOSURES, THE CONTRACTOR SHALL PROVIDE ADVANCED WARNING SIGNS AT THE AREAS TO BE IMPACTED. SIGNS SHALL PROVIDE A DESCRIPTION AND DURATION OF THE WORK TO BE PERFORMED AND SHALL BE APPROVED BY DNREC.

9. IN CASE OF CONFLICT BETWEEN THE "MANUFACTURER'S RECOMMENDATIONS" FOR AN APPROVED MATERIAL AND THE GOVERNING "CONTRACT SPECIFICATIONS" FOR THE MATERIAL, THE MORE RESTRICTIVE OF THE TWO SHALL PREVAIL UNLESS OTHERWISE DIRECTED BY THE ENGINEER.

10. THE CONSTRUCTION PLANS PRESENT A CONCEPT OF THE RELATIONSHIP BETWEEN BRIDGE MAINTENANCE, TRAFFIC CONTROL, EROSION CONTROL, ETC. ANY REVISION TO THE DETAILS OR SEQUENCE SHOWN ON THE CONSTRUCTION PLANS SHALL BE PREPARED BY THE CONTRACTOR ON STANDARD DNREC PLAN SHEETS AND SUBMITTED FOR REVIEW AND APPROVAL BY THE ENGINEER. THE PLANS SHALL BE PREPARED IN ACCORDANCE WITH CURRENT DELDOT AND DNREC STANDARDS FOR ROADWAY DESIGN, TRAFFIC CONTROL, EROSION AND SEDIMENT CONTROL (PREPARED BY A CERTIFIED CONSTRUCTION REVIEWER), STORM WATER MANAGEMENT, ETC. AND SHALL BE SIGNED AND SEALED BY A PROFESSIONAL ENGINEER REGISTERED IN THE STATE OF DELAWARE. ALL REQUIRED CALCULATIONS, REPORTS, ETC. SHALL ALSO ACCOMPANY THE SUBMISSION. THE NUMBER OF COPIES REQUIRED TO BE SUBMITTED FOR REVIEW SHALL BE DETERMINED BY DNREC, DEPENDING ON THE NATURE OF THE PROPOSED REVISION. THE CONTRACTOR SHALL NOTE THAT THE REVISIONS TO THE CONSTRUCTION PLANS, AS WELL AS REVIEW TIME BY DNREC, WILL NOT JUSTIFY A DELAY IN THE CONSTRUCTION SCHEDULE. REVISIONS INVOLVING UTILITIES WILL REQUIRE THE COMPLETION OF A UTILITY STATEMENT APPROVED BY THE RESPECTIVE UTILITIES AS PART OF THE PLAN DOCUMENTS. ALL COSTS INVOLVED IN PREPARING THE PLAN REVISIONS SHALL BE THE RESPONSIBILITY OF THE CONTRACTOR.

11. THE CONTRACTOR MUST SUBMIT A STAGING PLAN TO THE ENGINEER FOR APPROVAL PRIOR TO CONSTRUCTION OF THE PROJECT. THE STAGING PLAN SHALL INCLUDE SITE LOCATION, AND ALL OTHER INCIDENTALS, AS DIRECTED BY DNREC. ALL COSTS ASSOCIATED WITH PREPARING AND IMPLEMENTING THE STAGING PLAN SHALL BE THE RESPONSIBILITY OF THE CONTRACTOR. LOCATIONS FOR ALL STOCKPILE/STORAGE AREAS SHALL BE COORDINATED WITH DNREC AND APPROVED PRIOR TO THE START OF WORK. ENTIRE STOCKPILE AREAS SHALL BE REDRESSED AFTER CONSTRUCTION. REDRESSING SHALL INCLUDE TOPSOIL, SEEDING AND MULCH AS DIRECTED BY DNREC. REDRESSING SHALL BE INCIDENTAL TO THE CONTRACT.

12. THE AREAS OF RESTORATION ARE GENERALLY SHOWN, HOWEVER THE EXTENT OF RESTORATION IS NOT NECESSARILY LIMITED TO THESE AREAS. THE CONTRACTOR SHALL REGRADE AND RESTORE AREAS AS NECESSARY TO PROVIDE A UNIFORM, GRADUAL TRANSITION BETWEEN NEW FINISH GRADES AND EXISTING GRADES, TO CREATE A NATURAL APPEARANCE AND TO PROVIDE POSITIVE DRAINAGE AWAY FROM PAVED AREAS. SUCH GRADING AND RESTORATION SHALL BE DONE TO THE SATISFACTION OF, AND AT NO ADDITIONAL COST TO, DNREC.

13. THESE DRAWINGS DO NOT INCLUDE NECESSARY ELEMENTS OF CONSTRUCTION SAFETY. ALL CONSTRUCTION MUST BE COMPLETED IN ACCORDANCE WITH THE RULES AND REGULATIONS OF THE OCCUPATIONAL SAFETY AND HEALTH ACT, AND ALL FEDERAL, STATE AND LOCAL REQUIREMENTS. CONTRACTOR IS SOLELY RESPONSIBLE FOR SITE SAFETY.

14. EXISTING UTILITIES ARE SHOWN IN ACCORDANCE WITH THE BEST AVAILABLE INFORMATION. COMPLETENESS OR CORRECTNESS THEREOF IS NOT GUARANTEED. IT SHALL BE THE CONTRACTOR'S RESPONSIBILITY TO CONTACT THE UTILITY COMPANIES INVOLVED IN ORDER TO SECURE THE MOST ACCURATE INFORMATION AVAILABLE AS TO UTILITY LOCATION AND ELEVATION. NO CONSTRUCTION AROUND OR ADJACENT TO UTILITIES SHALL BEGIN WITHOUT NOTIFYING THEIR OWNERS AT LEAST 40 HOURS IN ADVANCE. THE CONTRACTOR SHALL TAKE THE NECESSARY PRECAUTIONS TO PROTECT THE EXISTING UTILITIES AND MAINTAIN UNINTERRUPTED SERVICE AND ANY DAMAGE DONE TO THEM DUE TO HIS/HER NEGLIGENCE SHALL BE IMMEDIATELY AND COMPLETELY REPAIRED AT THE CONTRACTORS'S EXPENSE. TO LOCATE EXISTING UTILITIES IN THE FIELD PRIOR TO CONSTRUCTION, THE CONTRACTOR SHALL CONTACT MISS UTILITY OF DELMARVA.

15. MAINTENANCE OF TRAFFIC – ALL WORK SHALL BE PERFORMED IN A MANNER THAT WILL ENSURE THE LEAST PRACTICABLE OBSTRUCTION TO TRAFFIC CONSISTENT WITH SAFETY AND SHALL COMPLY WITH THE DELDOT MANUAL ENTITLED "TRAFFIC CONTROLS FOR STREETS AND HIGHWAY CONSTRUCTION, MAINTENANCE, UTILITY AND EMERGENCY OPERATIONS". THE MOST CURRENT VERSION OF THIS MANUAL IN EFFECT AT THE TIME OF ADVERTISEMENT FOR BIDS SHALL BE USED. HEREINAFTER, THIS MANUAL SHALL BE REFERRED TO AS THE "TRAFFIC CONTROL MANUAL". TRAFFIC CONTROL EQUIPMENT SHALL BE NCHRP REPORT 350 COMPLIANT. THE CONTRACTOR SHALL SUBMIT A TRAFFIC CONTROL PLAN FOR APPROVAL BY DNREC BEFORE THE START OF THE PROJECT.

16. AT THE END OF EACH SHIFT/WORK DAY THE CONTRACTOR IS REQUIRED TO MAINTAIN TWO TRAVEL LANES, UNLESS OTHERWISE SHOWN ON THE PLANS. THESES TRAVEL LANES SHALL HAVE A MINIMUM WIDTH OF 11 FEET. NO STRIPING SHALL BE INCLUDED IN THIS 11 FOOT WIDTH.

17. ALL TRAFFIC CONTROL DEVICES SHALL BE IN NEW OR REFURBISHED CONDITION, SHALL COMPLY WITH THE TRAFFIC CONTROL MANUAL, AND SHALL BE APPROVED BY THE ENGINEER PRIOR TO INSTALLATION. TRAFFIC CONTROL DEVICES SHALL BE MAINTAINED IN GOOD CONDITION FOR THE DURATION OF USE.

18. WITHIN THE CONSTRUCTION AREA, ROAD WORK – 1500 FT, 1000 FT, 500 FT AND END OF WORK PERMANENT SIGNS SHALL BE PLACED WHENEVER POSSIBLE. IF THE ABOVE DISTANCES ARE NOT APPLICABLE, A "ROAD WORK AHEAD" PERMANENT SIGN SHALL BE PLACED, AS DIRECTED BY THE ENGINEER, AND "END OF ROAD WORK" PERMANENT SIGN SHALL BE PLACED ON THE RIGHT SIDE, 500 FT FROM THE WORK ZONE. ALL DIMENSIONS ARE APPROXIMATE AND MAY BE ADJUSTED TO MEE\TD FIELD CONDITIONS AS APPROVED BY THE ENGINEER. ALL PERMANENT TRAFFIC CONTROL SIGNS SHALL BE SEVEN FEET FROM THE BOTTOM OF THE SIGN TO THE TOP OF THE GROUND.

19. BREAKAWAY POSTS SHALL BE USED WHEN INSTALLING ALL MAINTENANCE OF TRAFFIC SIGNS.

GENERAL NOTES

1. THE INTENT OF THIS PROJECT IS TO CONSTRUCT THE FOLLOWING TASK OR TASKS AS DIRECTED BY THE OWNER:

   A. MAINTENANCE REPAIRS – CLEANING AND PAINTING EXISTING STRUCTURAL STEEL INCLUDING ALL CONTAINMENT SYSTEMS AND SCAFFOLDING,
   B. MAINTENANCE REPAIRS – TIMBER DECK REPLACEMENT,
   B.A. BASE BID: WHITE OAK DECKING.
   B.B. ADD/ALTERNATE BID: IPE DECKING.
   C. MAINTENANCE REPAIRS – MODIFICATIONS TO EXISTING HANGER ROD CONNECTIONS, AND
   D. MAINTENANCE REPAIRS – REGRADING OF EXISTING SITE AT NORTH PARK DRIVE DEADMAN ANCHORS.

2. THE CONTRACTOR SHALL PROTECT ALL FEATURES NOT DESIGNATED TO BE REMOVED. DAMAGED ITEMS SHALL BE REPAIRED OR REPLACED AS DIRECTED BY DNREC OR DNREC'S REPRESENTATIVE, AT NO COST TO DNREC.

3. EXISTING ELECTRICAL CONDUITS LOCATED ON AND SUPPORTED BY THE BRIDGE SHALL BE PROTECTED AT ALL TIMES. CONDUITS SHALL NOT BE USED FOR MATERIAL STORAGE NOR SHALL THEY SUPPORT WORKER.

4. NO DEBRIS SHALL BE BURIED OR BURNED ON THE SITE.

5. THE CONTRACTOR SHALL RESTORE ALL PAVING, SIDEWALKS. OR LAWNS AFFECTED BY THE CONSTRUCTION SHOWN HEREON TO A CONDITION COMPARABLE TO THAT EXISTING PRIOR TO CONSTRUCTION, TO THE SATISFACTION OF DNREC.

6. UTILITY POLES AND GUY WIRES SHALL NOT BE DISTURBED WITHOUT PRIOR APPROVAL FROM THE UTILITY OWNER.

7. THE CONTRACTOR MAY STORE OR STOCKPILE EQUIPMENT OR MATERIALS WITHIN THE PROJECT SITE STAGING AREAS, SHOWN ON PLAN. ANY OTHER LOCATIONS FOR ALL STOCKPILE/STORAGE AREAS SHALL BE COORDINATED WITH DNREC AND APPROVED BY THE DNREC SEDIMENT AND STORMWATER MANAGEMENT PROGRAM PRIOR TO THE START OF WORK. ENTIRE STOCKPILE AREAS SHALL BE REDRESSED AFTER CONSTRUCTION AND STABILIZED IN ACCORDANCE WITH EROSION AND SEDIMENT CONTROL REQUIREMENTS. COST SHALL BE INCLUDED IN THE LUMP SUM PRICE BID FOR THE PROJECT.

8. THE CONTRACTOR SHALL PROVIDE NECESSARY FACILITIES INCLUDING, BUT NOT LIMITED TO RESTROOMS, DURING CONSTRUCTION. THE CONTRACTOR IS ADVISED THAT CONTRACTOR EMPLOYEE PARKING IS NOT AVAILABLE ON SITE. EMPLOYEE PARKING SHALL BE CONDUCTED AT THE PARK PARKING LOT ON NORTH PARK DRIVE LOCATED UNDER I-95.

9. THE CONTRACTOR SHALL NOTE THAT IN CASE OF DISCREPANCY BETWEEN THE SCALED AND THE FIGURED DIMENSIONS SHOWN ON THE PLANS, THE FIGURED DIMENSIONS SHALL GOVERN.

MISCELLANEOUS

1. CONTRACTOR SHALL COORDINATE DETAILING, FABRICATION AND ERECTION WITH ALL RELATED TRADES PRIOR TO SUBMITTING SHOP DRAWINGS FOR APPROVAL. ALL SHOP DRAWINGS USED FOR WORK SHALL BEAR THE STAMP OF THE CONTRACTOR'S ENGINEER. NO SHOP DRAWINGS SHALL BE USED WHICH ARE MARKED "REVISE AND RESUBMIT", "RETURNED FOR CORRECTIONS", OR WORDS TO THAT EFFECT. ALL SHOP DRAWINGS SHALL BEAR AN APPROVAL STAMP OF THE CONTRACTOR INDICATING THE SHOP DRAWINGS HAVE BEEN REVIEWED/APPROVED BY THE CONTRACTOR.

2. WORKING DRAWINGS (SHOP DRAWINGS) SHALL BE PROVIDED FOR ALL FABRICATED ELEMENTS INCLUDING, BUT NOT LIMITED TO, STRUCTURE REPAIR PARTS, AND ALL FORMWORK, SCAFFOLDING AND SHORING. WORKING DRAWINGS SHALL BE SUBMITTED TO DMREC PARKS FOR APPROVAL PRIOR TO COMMENCING FABRICATION. FORMWORK, SCAFFOLDING AND SHORING DRAWINGS SHALL INCLUDE COMPUTATIONS SIGNED AND SEALED BY A PROFESSIONAL ENGINEER, EMPLOYED BY THE CONTRACTOR, REGISTERED IN THE STATE OF DELAWARE.

DEMOLITION NOTES

1. REMOVE EXISTING CONSTRUCTION AS SHOWN ON PLANS. SEE SECTIONS AND DETAILS FOR EXTENT OF STRUCTURE TO BE REMOVED. EXISTING STRUCTURAL STEEL FRAMING SHALL REMAIN.

EXISTING CONSTRUCTION

1. ALL DIMENSIONS AND ELEVATIONS SHOWN ON THE DRAWINGS ARE OBTAINED FROM BEST AVAILABLE SOURCES, AND ARE NOT GUARANTEED TO BE TRUE AND EXACT. THE CONTRACTOR SHALL VERIFY THESE DIMENSIONS AND ELEVATIONS BY ACTUAL FIELD MEASUREMENTS PRIOR TO FABRICATION OF ANY MATERIALS AFFECTED AND PRIOR TO START OF WORK. REPORT ANY DISCREPANCIES TO DNREC PRIOR TO START OF WORK. CONTRACTOR SHALL VERIFY CONDITIONS IN THE FIELD AND IMMEDIATELY NOTIFY DNREC OF ANY CONDITIONS NOT AS SHOWN. CONTRACTOR SHALL TAKE FIELD MEASUREMENTS AS REQUIRED.

BRIDGE MAINTENANCE NOTES:

TIMBER DECKING:

ALL DECKING SHALL CONFORM TO THE FOLLOWING:

1. ALL DECKING SHALL BE FULL THICKNESS PLANKS UNLESS APPROVED OTHERWISE.

2. [BASE BID]
   2.1. WOOD DECKING SHALL BE 3"x6" NOMINAL WHITE OAK, NO. 2 GRADE OR BETTER.
   2.2. ALL PLANKS SHALL BE PARTIALLY AIR DRIED TO A MOISTURE CONTENT OF 20% TO 30%, AND SHALL BE SUPPLIED SURFACED FOUR SIDES (S4S), EASED FOUR SIDES (E4S.)

3. [ALTERNATE 1]
   3.1. WOOD DECKING SHALL BE 5/4"x 6" NOMINAL NATURALLY DURABLE HARDWOOD IPE (TABEBUIA SPP LAPACHO GROUP) AIR DRIED TO A MOISTURE CONTENT OF APPROXIMATELY 12%. ALL PLANKS SHALL BE SUPPLIED WITH THE ENDS SEALED WITH "ANCHORSEAL" MOBIL CER-M OR AN EQUAL AQUIOUS WAX LOG SEALER. FIELD CUTS SHALL BE SWABBED WITH "ANCHORSEAL" MOBIL CER-M OR AN EQUAL AQUIOUS WAX LOG SEALER. ALL PLANKS SHALL BE SURFACED FOUR SIDES (S4S), EASED FOUR SIDES (E4S) AND GRADED AS FEQ-CAH (FIRST EXPORT QUALITY-CLEAR ALL HEART) GRADING RULES, DEFINED AS FOLLOWS:

4. LUMBER REQUIREMENTS:
   4.1. LUMBER SHALL BE GRADED BOTH FACES AND BOTH EDGES.
   4.2. LUMBER SHALL BE STRAIGHT GRAINED, MAXIMUM SLOPE OF GRAIN TO BE 1:10.
   4.3. LUMBER SHALL BE PARALLEL CUT WITHOUT HEART CENTERS OR SAP WOOD.
   4.4. LUMBER SHALL BE IN SOUND CONDITION, FREE FROM WORM HOLES OR KNOTS.

5. ALLOWABLE IMPERFECTIONS:
   5.1. ALL FACES: NATURAL DRYING CHECKS LESS THAN 1/32" IN WIDTH, BOW OR SPRING WHICH CAN BE REMOVED USING NORMAL INSTALLATION METHODS AND TOOLS.

6. IMPERFECTIONS NOT ALLOWED:
   6.1. LONGITUDINAL HEART CRACKS, INTERNAL CRACKS, SOFT SAP WOOD, SPLITS, END SPLITS, RING SHAKES, FUNGI AFFECTS (BLUE TO GRAY, BROWN TO RED, WHITE TO YELLOW, OR INCIPIENT DECAY), DEFORMATION (TWISTING OR CUPPING) WHICH CANNOT BE REMOVED USING NORMAL INSTALLATION METHODS AND TOOLS.

7. ALL PLANKS SHALL MEET OR EXCEED THE FOLLOWING MECHANICAL PROPERTIES (BASED ON THE 2" STANDARD) AS DEFINED BY THE U.S. FOREST PRODUCTS LABORATORY PUBLICATIONS AND TESTING DATA AND/OR NORTHEASTERN LUMBER MANUFACTURERS ASSOCIATION (NELMA):
   7.1. IPE – ALLOWABLE BENDING STRESS = 22,560 PSI.
   7.2. IPE – ALLOWABLE SHEAR STRESS = 2,060 PSI.
   7.3. WHITE OAK – ALLOWABLE BENDING STRESS = 850 PSI.
   7.4. WHITE OAK – ALLOWABLE SHEAR STRESS = 220 PSI.

TIMBER DECKING ATTACHMENT

1. AT TIME OF INSTALLATION, PLANKS ARE TO BE PLACED WITH A MAXIMUM GAP OF 1/4 INCHES.

2. ALL PLANKS SHALL BE ATTACHED WITH ONE FASTENER AT EACH END AND ONE FASTENER AT THE MID-POINT CONTINUOUS STEEL STRAP (3 TOTAL.) BOLTS AT ENDS SHALL BE PLACED IN THE MIDDLE THIRD OF THE WIDTH OF THE PLANK USING EXISTING ATTACHMENT HOLES IN THE BRIDGE SUPERSTRUCTURE.

3. ALL DECK FASTENERS TO BE ZINC PLATED BUTTON SOCKET BOLTS WITH WASHERS AND STEEL/NYLON TYPE LOCK NUTS. POWDER ACTUATED FASTENERS WILL NOT BE ALLOWED.

4. DECK PLANKS ARE TO BE DRILLED PRIOR TO INSTALLATION OF BOLTS .

HANGER ROD MODIFICATIONS

1. ALL HANGER ROD BOTTOM CONNECTIONS SHALL BE MODIFIED AS SHOWN ON THE PLANS AND DETAILS (SEE SHEET C2.3).

2. CONTRACTOR SHALL PROVIDE ADEQUATE TEMPORARY SUPPORT/SHORING/BRACING OF THE BRIDGE SUPERSTRUCTURE DURING HANGER ROD MODIFICATIONS. UNDER NO CIRCUMSTANCES SHALL TWO OR MORE ADJACENT HANGER RODS NOR MORE THAN TEN (10) TOTAL HANGER RODS BE DISCONNECTED AT ONE TIME.

3. THE CONTRACTOR SHALL SUBMIT A PLAN CLEARLY OUTLINING THE METHOD AND SEQUENCE OF HANGER ROD MODIFICATIONS TO DNREC FOR REVIEW AND APPROVAL PRIOR TO BEGINNING CONSTRUCTION.

BRIDGE TOE-PLATE & MISCELLANEOUS STEEL

1. ALL MISCELLANEOUS STEEL SHALL CONFORM TO ASTM A36, WITH A MINIMUM YIELD STRENGTH OF 36 KSI.

2. ALL STEEL BAR FOR TOE-PLATE AND SHIM PLATES SHALL BE HOT DIPPED GALVANIZED IN ACCORDANCE WITH ASTM A123. TOE PLATES SHALL BE PRIMED AND PAINTED IN ACCORDANCE WITH THE SECTION 605522, PRIOR TO PLACEMENT ON THE EXISTING BRIDGE STRUCTURE (SEE SHEET C2.2).

3. ALL BOLTS SHALL BE A307, GRADE A 5/16" DIAMETER GALVANIZED PLOW BOLTS WITH F436 WASHERS AND A563 LOCKING NUTS. HOLES FOR PLOW BOLTS SHALL BE COUNTERSUNK TO ACCEPT BOLTS.

4. NO DRILLING, GRINDING, WELDING OR OTHER MODIFICATIONS TO THE EXISTING BRIDGE STRUCTURE SHALL BE ALLOWED WITHOUT THE WRITTEN APPROVAL OF DNREC, WITH THE EXCEPTION OF THE INSTALLATION OF THE TOE-PLATE AS SHOWN ON SHEET C2.2. ALL MEMBERS TO BE DRILLED SHALL BE MARKED PRIOR TO DRILLING FOR APPROVAL BY DNREC.

STRUCTURAL STEEL PAINTING:

ALL STRUCTURAL STEEL, INCLUDING SUSPENSION CABLES, SUPERSTRUCTURE TRUSSES, HANGER RODS, AND TOWERS, SHALL BE CLEANED AND PAINTED WITH A THREE (3) COAT URETHANE PAINT SYSTEM IN ACCORDANCE WITH THE FOLLOWING:

1. THE CONTRACTOR IS TO USE ITEM NO 605532 – CLEANING EXISTING STEEL STRUCTURES, (NON-HAZARDOUS BASE) FOR THE PAINT AND CORROSION REMOVAL ON THE STRUCTURE.

2. ALL PAINT SYSTEMS ON THE STRUCTURAL STEEL ON THE STRUCTURE SHALL BE REMOVED AND PROPERLY DISPOSED OF AS PER THE SPECIFICATIONS.

3. THE CONTRACTOR SHALL BE RESPONSIBLE TO CHECK AND MONITOR THE STRUCTURE DURING THE PAINT REMOVAL PROCESS TO ENSURE THAT DAMAGE IS NOT OCCURRING TO ANY PART OF THE STRUCTURE. SHOULD DAMAGE OCCUR REQUIRING ADDITIONAL OR UNANTICIPATED REPAIR WORK, THE CONTRACTOR SHALL BE RESPONSIBLE FOR ALL REPAIRS AT NO ADDITIONAL COST TO DNREC.

4. DURING CLEANING OPERATIONS, THE CONTRACTOR SHALL REPORT TO DNREC ANY DEFECTS IN THE STEEL. THESE DEFECTS INCLUDE, BUT ARE NOT LIMITED TO, LOSS OF SECTION, CRACKING, BUCKLING, LOOSE BOLTS, AND LOOSE RIVETS.

5. NO EQUIPMENT IS ALLOWED IN ANY WATERWAY OR WETLAND.

6. CONTAINMENT SYSTEMS ARE REQUIRED FOR ANY ABRASIVE BLASTING. THE DESIGN OF THE CONTAINMENT SYSTEM MUST BE SUBMITTED AND APPROVED BY DNREC PRIOR TO ANY WORK BEING PERFORMED.

7. THE BIDDER WILL BE REQUIRED TO PROVIDE A WARRANTY AND GUARANTEE FOR ALL PAINT SYSTEMS UNDER THIS CONTRACT FOR A PERIOD OF TWO (2) YEARS AS COVERED UNDER THE SPECIFICATIONS. THE WARRANTY AND GUARANTEE WILL NOT TAKE EFFECT UNTIL THE DATE OF FINAL ACCEPTANCE.

8. IN REGARDS TO THE AIR MONITORING REQUIREMENTS IN ITEM NO 605532 – CLEANING EXISTING STEEL STRUCTURES, NON-HAZARDOUS BASE; PAINT REMOVAL SHALL INCLUDE ALL BLASTING AND CLEAN UP ACTIVITIES.

9. THE CONTRACTOR SHALL NOTIFY DNREC THREE (3) DAYS PRIOR TO THE START OF THE CLEANING OPERATION. DNREC SHALL BE ALLOWED TO TAKE MEASUREMENTS OF SECTION LOSS ON ANY STEEL MEMBER THAT HE DEEMS NECESSARY AFTER THE CLEANING OPERATION AND BEFORE PAINTING BEGINS.

10. THE STRUCTURAL STEEL PAINT COLOR SHALL BE FLAT BLACK (#37030) AS PER FEDERAL STANDARD 595B. THE COLOR SHALL BE SUBMITTED TO DNREC FOR APPROVAL PRIOR TO PAINTING.

11. PROOF IS REQUIRED THAT THE PAINT CONTRACTOR OR SUBCONTRACTOR PERFORMING THE CLEANING/PAINTING OPERATION IS CERTIFIED BY THE STEEL STRUCTURES PAINTING COUNCIL (SSPC) PAINTING CONTRACTOR CERTIFICATION PROGRAM (PCCP) QP-1 AND QP-2. SUCH CERTIFICATION SHALL BE FOR THE DURATION OF THE PROJECT. THE APPARENT LOW BIDDER SHALL SUBMIT QP-1 AND QP-2 CERTIFICATION DOCUMENTATION WITHIN 10 CALENDAR DAYS OF THE BID OPENING.

SUGGESTED SEQUENCE OF CONSTRUCTION

1. INSTALL INFORMATIONAL SIGNS AS APPROVED BY AND AT LOCATIONS DIRECTED BY DNREC.
2. INSTALL ALL MAINTENANCE OF TRAFFIC OF TRAFFIC AND PEDESTRIAN MAINTENANCE OF TRAFFIC SIGNS.
3. MARK ALL UNDERGROUND UTILITIES IN VICINITY OF WORK.
4. INSTALL ALL TRAFFIC AND PEDESTRIAN BARRICADES TO CLOSE THE SITE. PEDESTRIAN BARRICADES SHALL BE INSTALLED AS REQUIRED AND/OR DIRECTED BY DNREC, TO SECURE THE SITE, AND SHALL CONSIST OF 8 FOOT TALL CHAIN LINK FENCE ON STEEL POSTS SUPPORTED IN PORTABLE CONCRETE BASES. PROVIDE FENCE SHOP DRAWINGS TO DNREC FOR APPROVAL PRIOR TO CONSTRUCTION.
5. REGRADE EMBANKMENT AT NORTH PARK DRIVE DEAD MAN ANCHORS PER PLANS.
6. INSTALL EROSION AND SEDIMENT CONTROLS IN CONJUNCTION WITH ALL GRADING WORK. REFER TO EROSION AND SEDIMENT CONTROL PLANS FOR E & S METHODS.
7. INSTALL PAINTING SCAFFOLDING ON BRIDGE STRUCTURE.
8. REMOVE EXISTING WOOD BRIDGE DECK AND DISPOSE OF IN ACCORDANCE WITH ALL APPLICABLE LAWS.
14. PERFORM ALL STEEL REPAIRS INCLUDING HANGER ROD MODIFICATIONS, RESETTING BRIDGE BEARINGS, AND PLACE NEW ANCHOR BOLTS.
15. INSTALL PAINT ENCAPSULATION SHIELDING IN ACCORDANCE WITH ALL STATE AND FEDERAL REQUIREMENTS.
16. CLEAN AND PAINT STEEL SUPERSTRUCTURE.
17. INSTALL NEW TIMBER DECKING.
18. INSTALL NEW GALVANIZED AND PAINTED STEEL TOE PLATE ON BRIDGE TRUSSES.
19. REMOVE ENCAPSULATION SHIELDING AND SCAFFOLDING.
20. REMOVE TRAFFIC AND PEDESTRIAN BARRICADES.
21. REMOVE MAINTENANCE OF TRAFFIC AND PEDESTRIAN SIGNAGE.

Century Engineering, Inc.

DATE:	DESCRIPTION:	BY:
5/1/2009	1 ADDENDUM #1 REVISION: REVISED NOTES	MSK

SWINGING BRIDGE MAINTENANCE REPAIRS

PROJECT NOTES

DELAWARE DEPARTMENT OF NATURAL RESOURCES AND ENVIRONMENTAL CONTROL

DESIGNED BY: W.J.H.

DRAWN BY: M.T.R.

BUILDING NO.: - - - -

DATE: FEBRUARY 2014

SCALE: NONE

SHEET NO.: C1.1

PARKS PROJECT #: WB-10

CONTRACT #: 2014-WB-100

G:\PROJECTS\125002.OE (DNREC Civil Engineering Services - 2012)\125002.01_(N. DE Greenway_Swinging Bridge)\CADD FILES\BRIDGE PLANS\C1.1 PROJECT NOTES.dwg, 2/28/2014 8:30:40 AM

STAGING PLAN

SCALE: 1" = 10'

LEGEND

Ⓖ	GAS MANHOLE	F. H.	FIRE HYDRANT		STEEL BEAM GUARD RAIL
Ⓢ	SANITARY SEWER MANHOLE	LAMP	RESIDENTIAL STREET LAMP AND POST		WOOD POST AND CABLE GUARD RAIL
S S	SANITARY SEWER	W.M.	WATER METER		UTILITY POLE GUY WIRE ANCHOR
Ⓣ	TELEPHONE MANHOLE		STRAND OR WOVEN WIRE FENCE	G. V.	GAS VALVE
Ⓔ	ELECTRIC MANHOLE		WOODEN FENCE	W. V.	WATER VALVE
OH	OVERHEAD UTILITY		STREAM FLOW DIRECTION ARROW		WOOD POLE

NOTES:

1. AREAS SHOWN ABOVE ARE ACCEPTABLE STAGING AREAS.
2. THE CONTRACTOR MAY REQUEST ADDITIONAL AREAS OR MODIFICATIONS TO THE STAGING AREAS SHOWN ABOVE BY SUBMITTING A MODIFIED OR NEW STAGING PLAN TO DNREC FOR REVIEW AND APPROVAL.
3. THE CONTRACTOR SHALL BE RESPONSIBLE FOR SECURING ALL STAGING AREAS TO PREVENT ACCESS FROM NON-AUTHORIZED PERSONNEL. REFER TO PROJECT NOTES, SHEET C1.1.
4. THE CONTRACTOR SHALL BE AWARE OF EXISTING PRIVATE OVERHEAD AND UNDERGROUND UTILITIES. UTILITIES SHOWN BASED ON THE BEST AVAILABLE INFORMATION.
5. THE CONTRACTOR SHALL AT ALL TIMES MAINTAIN EMERGENCY ACCESS TO THE POLE MOUNTED SWITCHGEAR ADJACENT TO THE NORTH BRIDGE APPROACH RAMP.
6. CONTRACTOR SHALL COORDINATE WITH DNREC FOR APPROVAL ON METHOD OF ACCESSING WEST BRIDGE APPROACH.

Century Engineering, Inc.

DATE:	DESCRIPTION:	BY:
DATE:	DESCRIPTION:	BY:

SWINGING BRIDGE MAINTENANCE REPAIRS

STAGING PLAN

DELAWARE DEPARTMENT OF NATURAL RESOURCES AND ENVIRONMENTAL CONTROL

DESIGNED BY: W.J.H.

DRAWN BY: M.T.R.

BUILDING NO.: - - - -

DATE: FEBRUARY 2014

SCALE: 1" = 10'

SHEET NO.: C1.2

PARKS PROJECT #: WB-10

CONTRACT #: 2014-WB-100

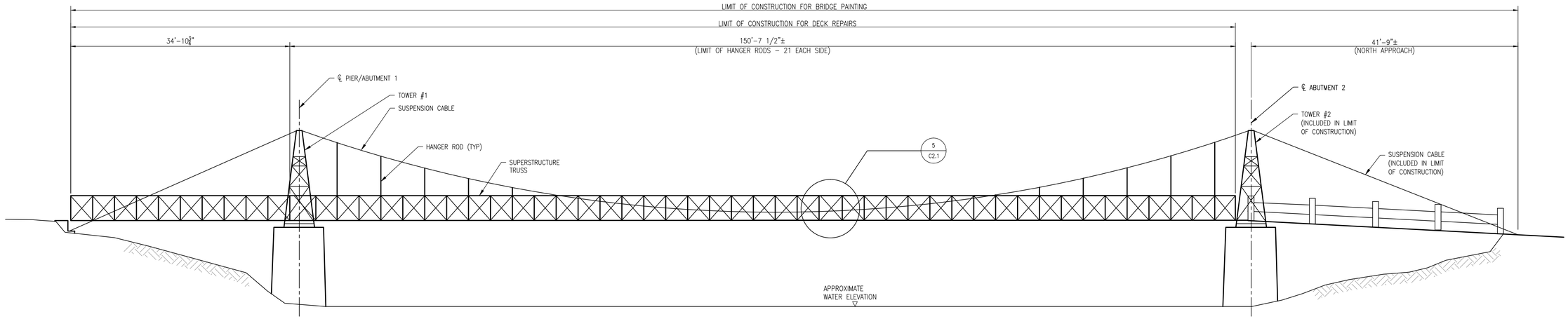

1 C2.1 **EXISTING BRIDGE SOUTH ELEVATION**
SCALE: 1/8" = 1'-0"

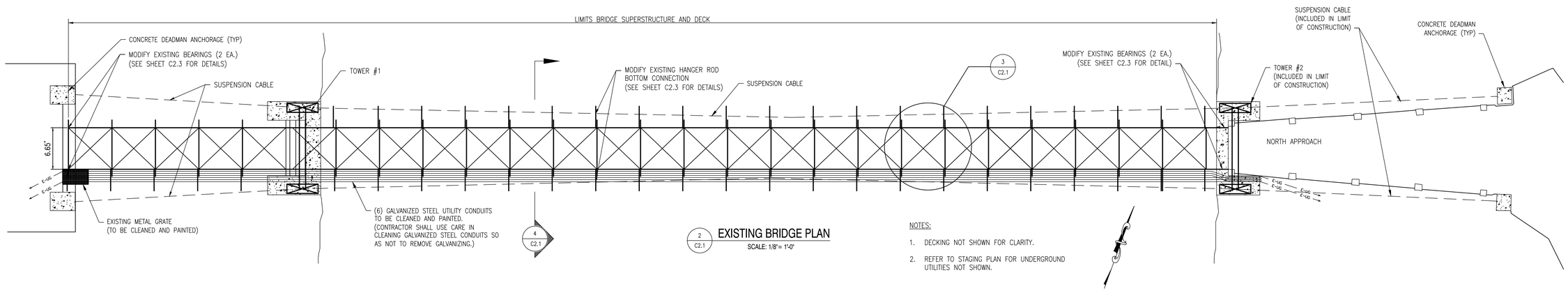

2 C2.1 **EXISTING BRIDGE PLAN**
SCALE: 1/8" = 1'-0"

NOTES:

1. DECKING NOT SHOWN FOR CLARITY.
2. REFER TO STAGING PLAN FOR UNDERGROUND UTILITIES NOT SHOWN.

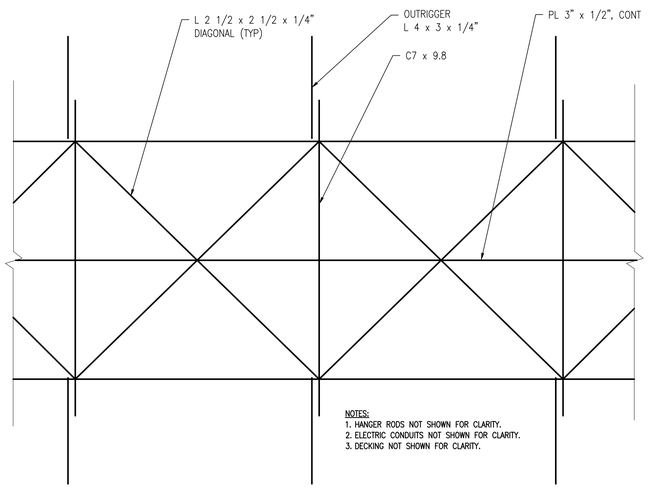

NOTES:
1. HANGER RODS NOT SHOWN FOR CLARITY.
2. ELECTRIC CONDUITS NOT SHOWN FOR CLARITY.
3. DECKING NOT SHOWN FOR CLARITY.

3 C2.1 **PLAN - BRIDGE FLOOR TRUSS DETAIL**
SCALE: 1/2" = 1'-0"

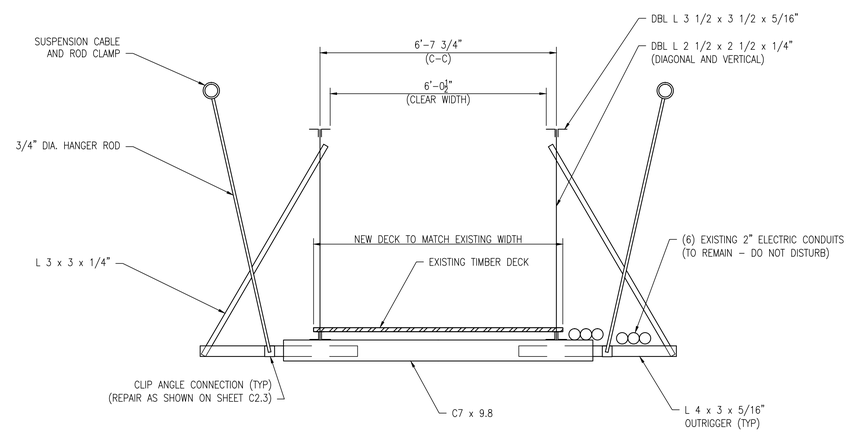

4 C2.1 **SECTION - BRIDGE THRU - TRUSS**
SCALE: NONE

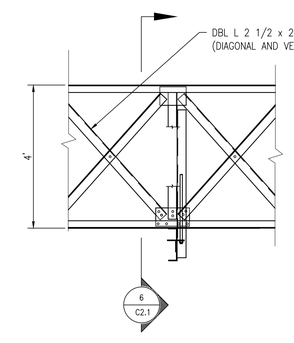

5 C2.1 **TRUSS DETAIL**
SCALE: 1/2" = 1'-0"

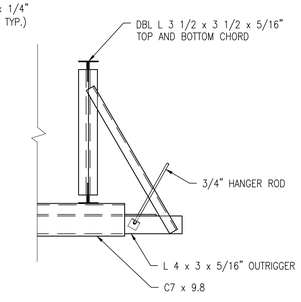

6 C2.1 **SECTION**
SCALE: 1/2" = 1'-0"

NOTES:

1. THESE DETAILS SHOWN FOR REFERENCE ONLY. CONTRACTOR IS RESPONSIBLE FOR VERIFICATION OF EXISTING CONDITIONS AND REPORTING ANY DISCREPANCIES FOUND TO THE OWNER.

Century Engineering, Inc.

DATE:	DESCRIPTION:	BY:
DATE:	DESCRIPTION:	BY:

SWINGING BRIDGE MAINTENANCE REPAIRS

EXISTING BRIDGE STRUCTURE AND DETAILS

DELAWARE DEPARTMENT OF NATURAL RESOURCES AND ENVIRONMENTAL CONTROL

DESIGNED BY: W.J.H.
DRAWN BY: M.T.R.
BUILDING NO.: - - - -
DATE: FEBRUARY 2014
SCALE: AS NOTED
SHEET NO.: C2.1
PARKS PROJECT #: WB-10
CONTRACT #: 2014-WB-100

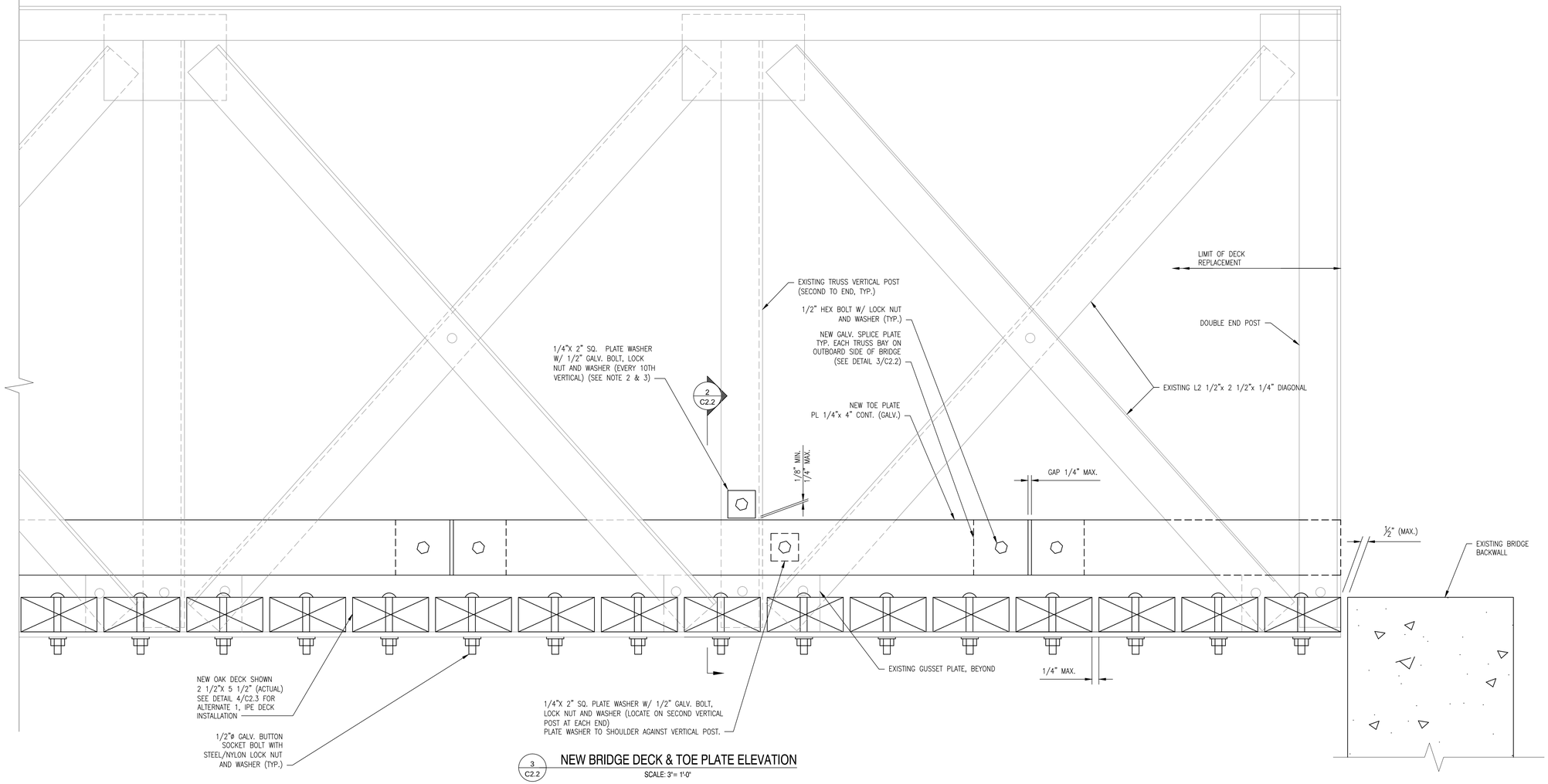

3 C2.2 NEW BRIDGE DECK & TOE PLATE ELEVATION

SCALE: 3"= 1'-0"

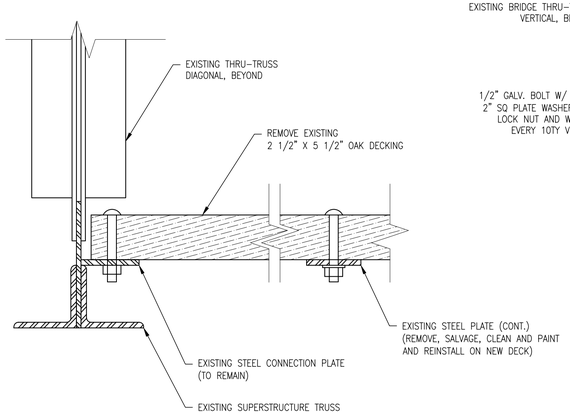

1 C2.2 EXISTING BRIDGE DECK DEMOLITION

SCALE: 3"= 1'-0"

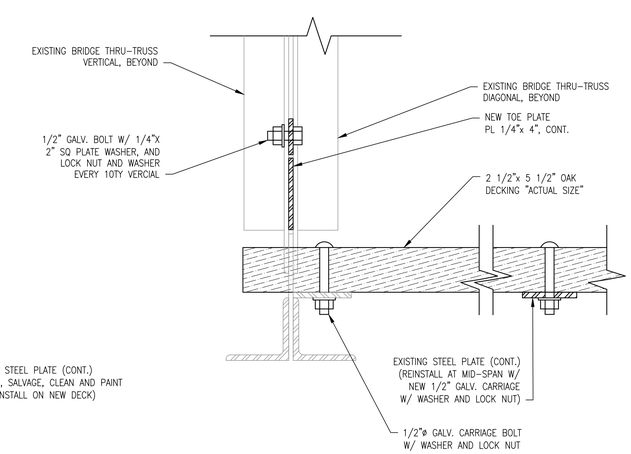

2 C2.2 NEW BRIDGE DECK SECTION

SCALE: 3"= 1'-0"

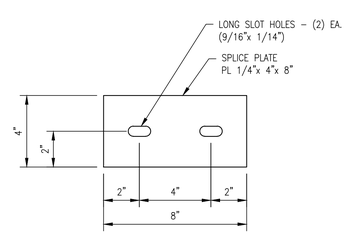

3 C2.2 TOE KICK SPLICE PLATE

SCALE: 3"= 1'-0"

NOTES:

1. COMPLETE BRIDGE SUPERSTRUCTURE NOT SHOWN FOR CLARITY.
2. NEW TOE PLATE TO BE CONTINUOUS ON EACH SIDE OF BRIDGE FROM END POST TO END POST.
3. NEW TOE PLATE TO BE RESTRAINED VERTICALLY BY EXISTING BRIDGE SUPERSTRUCTURE TRUSS AT EVERY 10TH VERTICAL MEMBER USING A 1/4"X 2" SQUARE PLATE WASHERS WITH 1/2" DIA. BOLT, LOCK NUTS, AND WASHERS. BOLT, WASHERS AND NUT SHALL BE HOT DIPPED GALVANIZED AND PAINTED FLAT BLACK TO MATCH BRIDGE.
4. NEW TOE PLATE TO BE RESTRAINED LONGITUDINALLY BY EXISTING BRIDGE SUPERSTRUCTURE TRUSS AT THE SECOND VERTICAL POSTS (TOTAL 4 EACH) USING A 1/4"X 2" SQUARE PLATE WASHERS WITH 1/2" DIA. BOLT, LOCK NUTS, AND WASHERS. BOLT, WASHERS AND NUT SHALL BE HOT DIPPED GALVANIZED AND PAINTED FLAT BLACK TO MATCH BRIDGE.

Century Engineering, Inc.

DATE:	DESCRIPTION:	BY:
DATE:	DESCRIPTION:	BY:

SWINGING BRIDGE MAINTENANCE REPAIRS

DECK MAINTENANCE DETAILS

DELAWARE DEPARTMENT OF NATURAL RESOURCES AND ENVIRONMENTAL CONTROL

DESIGNED BY: W.J.H.

DRAWN BY: M.T.R.

BUILDING NO.: - - - -

DATE: FEBRUARY 2014

SCALE: AS SHOWN

SHEET NO.: C2.2

PARKS PROJECT #: WB-10

CONTRACT #: 2014-WB-100

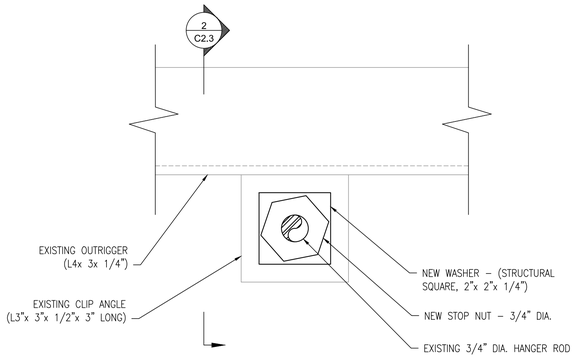

1 C2.3 HANGER ROD BOTTOM CONNECTION PLAN

SCALE: 6 "= 1'- 0"

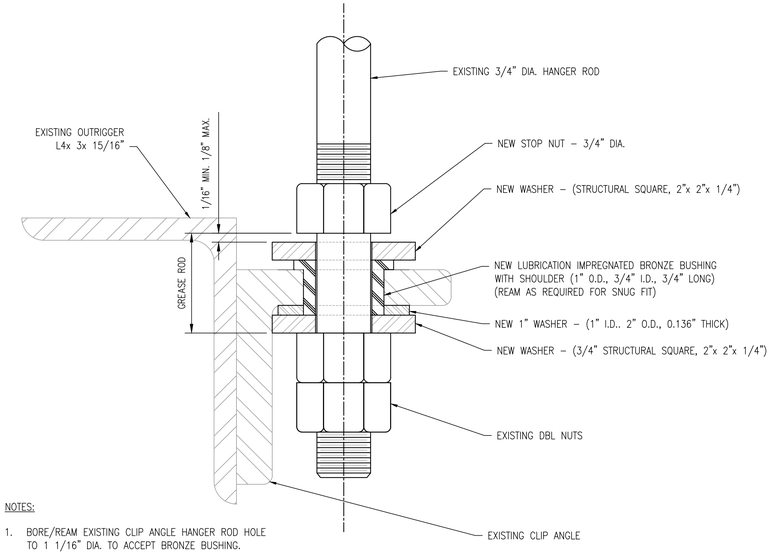

NOTES:

1. BORE/REAM EXISTING CLIP ANGLE HANGER ROD HOLE TO 1 1/16" DIA. TO ACCEPT BRONZE BUSHING.
2. COAT SECTION OF HANGER ROD BETWEEN STOP NUT AND DOUBLE BOTTOM NUTS WITH A LIGHT COAT OF ANIT–SEASE TYPE GREASE BEFORE FINAL ASSEMBLY.
3. STOP NUT THREADS TO BE COATED WITH LOK–TITE OR OTHER APPROVED THREAD LOCK MATERIAL TO PREVENT MOVEMENT.

2 C2.3 HANGER ROD BOTTOM CONNECTION MODIFICATION

SCALE: 1 "= 1"

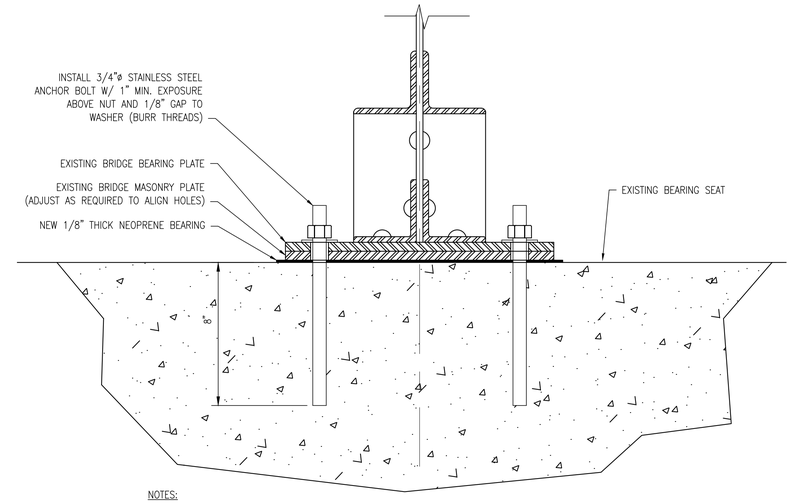

NOTES:

1. CONTRACTOR TO PROVIDE ALL JACKING, CRIBBING, OR OTHER TEMPORARY WORK AS REQUIRED TO INSTALL THE ANCHOR BOLTS.
2. ALL STEEL SHALL BE CLEANED AND PAINTED BY THE CONTRACTOR IN ACCORDANCE WITH THE SECTIONS 605522 AND 605532 PRIOR TO BEARING REPAIRS.
3. ALIGN EXISTING BEARING PLATE AND MASONRY PLATE HOLES, AS REQUIRED.
4. CORE EXISTING ABUTMENT SEAT FOR INSTALLATION OF NEW ANCHOR BOLTS.
5. PROVIDE AND INSTALL 1/8" THICK NEOPRENE BEARING PAD BETWEEN CONCRETE BEARING SEAT AND MASONRY PLATE IMMEDIATELY PRIOR TO PLACING MASONRY PLATE. BEARING PAD TO MATCH LENGTH AND WIDTH OF EXISTING MASONRY PLATE PLUS 1/2" EACH SIDE.
6. ANCHOR BOLTS SHALL BE STAINLESS STEEL AND SHALL BE GROUTED IN PLACE USING A TWO PART EPOXY TYPE ADHESIVE SUITABLE FOR THIS CONSTRUCTION AND IN ACCORDANCE WITH THE REQUIREMENTS OF THE MANUFACTURER. HOLES FOR ANCHOR BOLTS SHALL BE FILLED COMPLETELY WITH ADHESIVE WITH NO DEPRESSIONS ALLOWED.
7. CONTRACTOR SHALL CLEAN THE EXISTING CONCRETE BEARING SEAT OF ALL FOREIGN DEBRIS, TO THE SATISFACTION OF DNREC, PRIOR TO REASSEMBLY OF BEARINGS.

3 C2.3 BEARING ANCHOR BOLT REPAIRS

SCALE: 3 "= 1'-0"

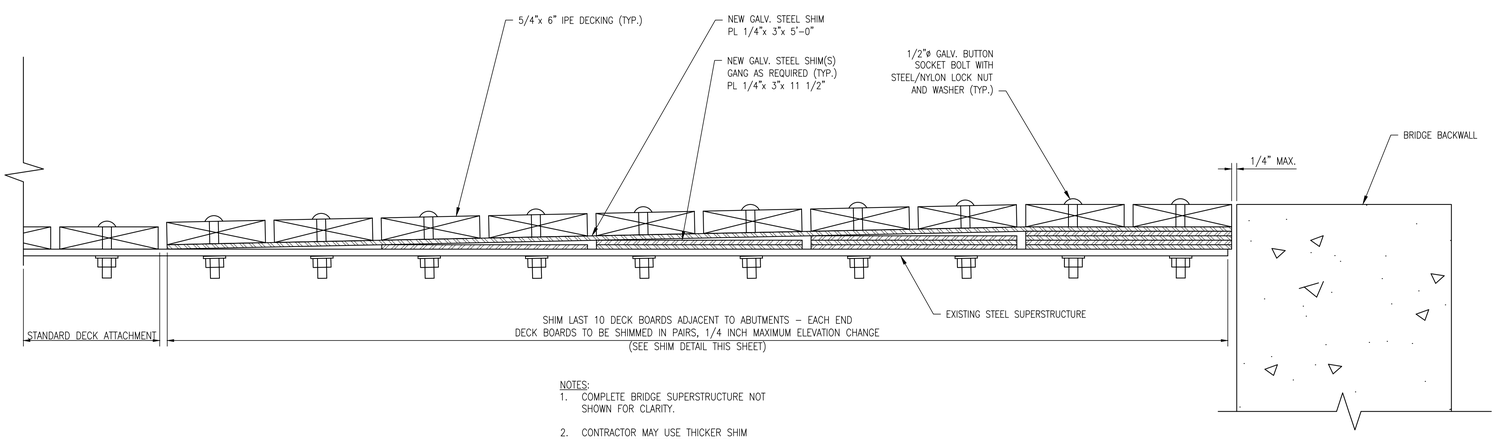

NOTES:

1. COMPLETE BRIDGE SUPERSTRUCTURE NOT SHOWN FOR CLARITY.
2. CONTRACTOR MAY USE THICKER SHIM PLATES TO SUBSTITUTE MULTIPLE LAMINATIONS OF SHIMS, AS SHOWN.

4 C2.3 ALTERNATE 1 - IPE DECK END TRANSITIONS

SCALE: 3 "= 1"

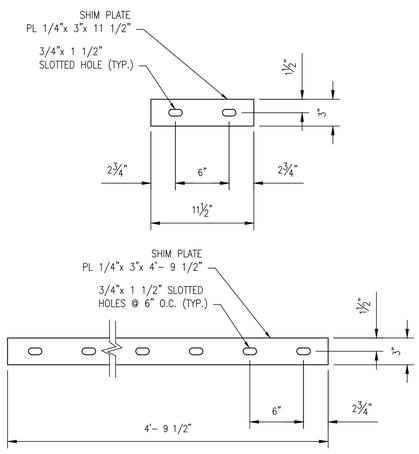

5 C2.3 ALTERNATE 1 - SHIM PLATE DETAILS

SCALE: 1 1/2"= 1"

Century Engineering, Inc.

DATE:	DESCRIPTION:	BY:
DATE:	DESCRIPTION:	BY:

SWINGING BRIDGE MAINTENANCE REPAIRS

BRIDGE SUPERSTRUCTURE REPAIR DETAILS

DELAWARE DEPARTMENT OF NATURAL RESOURCES AND ENVIRONMENTAL CONTROL

DESIGNED BY: W.J.H.

DRAWN BY: M.T.R.

BUILDING NO.: - - - -

DATE: FEBRUARY 2014

SCALE: AS SHOWN

SHEET NO.: C2.3

PARKS PROJECT #: WB-10

CONTRACT #: 2014-WB-100

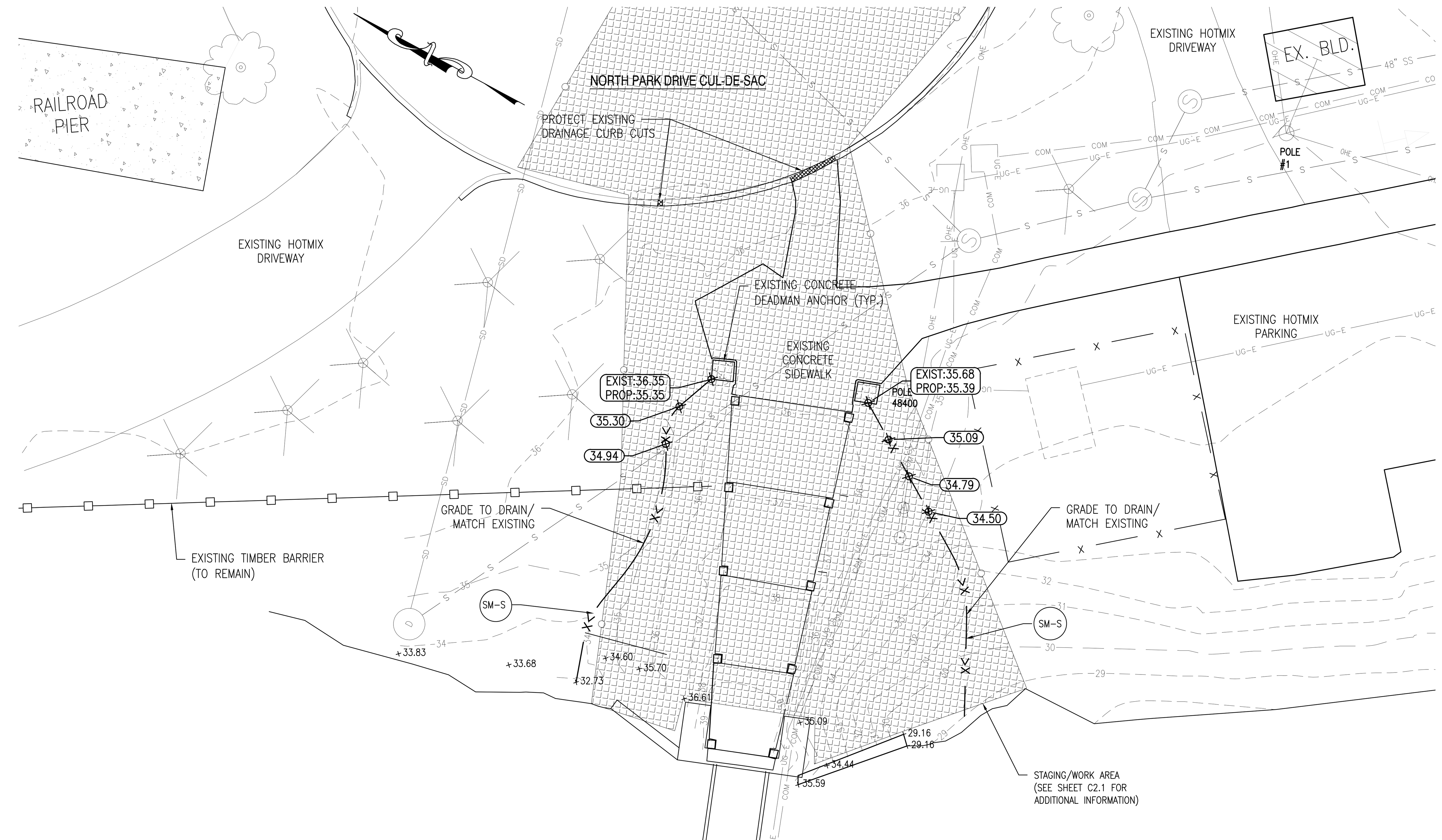

EROSION AND SEDIMENT CONTROL PLAN

SCALE: 1" = 10'

LEGEND

	LIMIT OF DISTURBANCE
— — 151— — —	EXISTING CONTOUR
︵︵︵︵︵	EXISTING WOODS LINE
—— >X —— >X ——	PROPOSED SWALE ALIGNMENT
+33.68	EXISTING SPOT ELEVATIONS
(35.19)	PROPOSED SPOT ELEVATIONS

GENERAL NOTES:

1. EXISTING SUSPENSION CABLES NOT SHOWN FOR CLARITY. SEE SHEET C2.1 FOR ADDITIONAL INFORMATION.
2. CONTRACTOR TO LOCATE AND MARK ALL UNDERGROUND UTILITIES PRIOR TO WORK.
3. WORK TO INCLUDE LOWERING EXISTING GRADE AT THE CONCRETE DEADMAN ANCHORS TO FULLY EXPOSE THE STEEL SUSPENSION CABLES AND ATTACHMENTS LEAVING A MINIMUM CLEARANCE OF 6 INCHES BETWEEN FINISHED GRADE AND THE STEEL.
4. EXCAVATION SHALL BE TIED INTO EXISTING SWALES TO PROVIDE POSITIVE DRAINAGE.
5. WORK SHALL BE PERFORMED TO PROVIDE THE LEAST DISTURBANCE TO THE EXISTING SITE AS POSSIBLE AT THE DIRECTION AND APPROVAL OF DNREC.
6. SEE EROSION AND SEDIMENT CONTROL SEQUENCE AND PROJECT NOTES FOR SEDIMENT AND STORMWATER MANAGEMENT FOR ADDITIONAL INFORMATION.

EROSION AND SEDIMENT CONTROL SEQUENCE OF CONSTRUCTION

1. NOTIFY THE DNREC PROJECT MANAGER, IN WRITING, OF THE INTENT TO START CONSTRUCTION AT LEAST FIVE DAYS PRIOR TO COMMENCING WORK.
2. CONDUCT PRECONSTRUCTION CONFERENCE, ON SITE, WITH ALL APPROPRIATE PERSONNEL, INCLUDING THE DNREC PROJECT MANAGER, TO SET UP PROJECT SCHEDULE AND PROCEDURES FOR COMPLETING THE SCOPE OF WORK AND EROSION AND SEDIMENT CONTROL MEASURES.
3. DELINEATE WORK AREA.
4. GRADE SWALES AND STABILIZE ALL DISTURBED AREAS AS WORK PROGRESSES. STABILIZATION SHALL CONSIST EXCLUSIVELY OF STABILIZATION MATTING–SLOPE (SM–S) WITH APPROPRIATE GRASS SEED MIX.

PROJECT NOTES FOR SEDIMENT AND STORMWATER MANAGEMENT

1. IF THE PLAN NEEDS TO BE MODIFIED, ADDITIONAL SEDIMENT AND STORMWATER CONTROL MEASURES MAY BE REQUIRED AS DEEMED NECESSARY BY DNREC.
2. FOLLOWING SOIL DISTURBANCE ALL EXPOSED AREAS SHALL BE STABILIZED. THE CONTRACTOR SHALL BE RESPONSIBLE FOR MAINTENANCE AND REPAIRS OF ALL EROSION AND SEDIMENT CONTROL AND STORMWATER MANAGEMENT PRACTICES DURING UTILITY INSTALLATION AND THE DURATION OF THE PROJECT.
3. THE CONTRACTOR SHALL CLEAR AND GRUB AND/OR EXCAVATE ONLY THOSE AREAS WHICH CAN BE BACKFILLED TO THE TOP OF THE BASE COURSE, ROUGH GRADED AND STABILIZED BY THE END OF EACH WORK DAY. SHOULD THE CONTRACTOR CHOOSE TO DISTURB AREAS IN EXCESS OF WHAT CAN BE BACKFILLED, GRADED AND STABILIZED, ADDITIONAL EROSION AND SEDIMENT CONTROL DEVICES WILL BE REQUIRED, AS DETERMINED BY THE ENGINEER IN THE FIELD.
4. ALL DISTURBED AREAS SHALL BE STABILIZED WITH 4" TOPSOIL, SEED AND SOIL RETENTION BLANKET, AS WORK PROGRESSES. THE CONTRACTOR SHALL ONLY DISTURB THE AMOUNT OF SOIL THAT CAN BE COMPLETELY STABILIZED AT THE END OF DAY, WITH NO EXCEPTIONS.
5. EROSION CONTROL MATTING SHALL BE NORTH AMERICAN GREEN SC150 OR APPROVED EQUAL.
6. IT IS INTENDED THAT MUD TRACKING BE ELIMINATED ON ALL ROADWAYS ADJOINING THE PROJECT. CONTRACTOR SHALL CLEAN ALL PAVED SURFACES ADJACENT TO THE SITE AT THE END OF EACH WORK DAY, PERFORM REPAIRS AND MAINTENANCE OF ALL EROSION AND SEDIMENT CONTROL MEASURES AS NECESSARY AND/OR REQUIRED BY THE DNREC PROJECT MANAGER. ALL PAVED SURFACES ADJOINING THE PROJECT LIMITS SHALL BE LEFT IN A BROOM CLEAN CONDITION AT THE END OF EACH WORK DAY.

Delaware Erosion & Sediment Control Handbook

Standard Detail & Specifications
Stabilization Matting - Slope

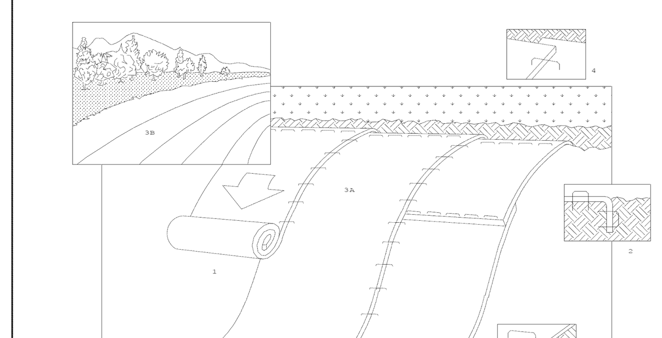

Note: Use manufacturer's recommendations for stapling patterns for slope installations.

Perspective

Construction Notes:

1. Prepare soil before installing matting, including application of lime, fertilizer, and seed.
2. Begin at the top of the slope by anchoring the mat in a 6" deep X 6" wide trench. Backfill and compact trench after stapling.
3. Roll the mats (A) down or (B) horizontally across the slope.
4. The edges of parrallel mats must be stapled with approx. 2" overlap.
5. When mats must be spliced down the slope, place mats end over end (shingle style) with approx. 4" overlap. Staple through overlapped area, approx. 12" apart.

Source:	Symbol:	Detail No.
Adapted from North American Green, Inc.	SM-S	DE-ESC-3.4.6.1 Sheet 1 of 2 Date: 6/05

Delaware Erosion & Sediment Control Handbook

Standard Detail & Specifications
Stabilization Matting - Slope

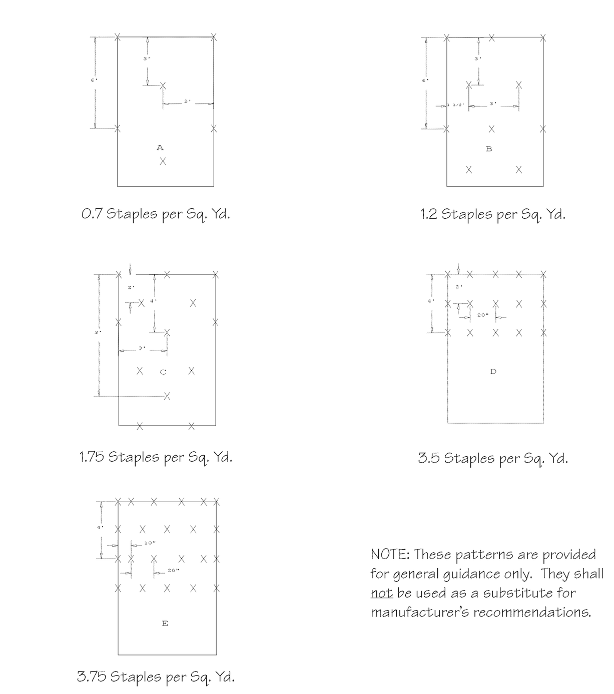

NOTE: These patterns are provided for general guidance only. They shall not be used as a substitute for manufacturer's recommendations.

Stapling Patterns

Source:	Symbol:	Detail No.
Adapted from North American Green, Inc.	SM-S	DE-ESC-3.4.6.1 Sheet 2 of 2 Date: 6/05

Delaware Erosion & Sediment Control Handbook

Standard Detail & Specifications
Vegetative Stabilization

TEMPORARY SEEDING BY RATES, DEPTHS AND DATES

Mix #	Species[6]	Seeding Rate		Optimum Seeding Dates [1] O = Optimum Planting Period; A = Acceptable Planting Period							Planting Depth[3]
				Coastal Plain			Piedmont			All	
	Certified Seed	lb/Ac[5]	lb/1000 sq.ft.	2/1-4/30	[2] 5/1-8/14	8/15-10/31	3/1-4/30	[2] 5/1-7/31	8/1-10/31	10/31-2/1	
1	Barley	125	4	O	A	O	O	A	O		1-2 inches 2-3" sandy soils
2	Oats	125	4	O	A	A	O	A	A		1-2 inches 2-3" sandy soils
3	Rye	125	4	O	A	O	O	A	O	A	1-2 inches 2-3" sandy soils
4	Perennial Ryegrass	125	4	O	A	O	O	A	O		0.5 inches 1-2" sandy soils
5	Annual Ryegrass	125	4	O	A	O	O	A	O	A	0.5 inches 1-2" sandy soils
6	Winter Wheat	125	4	O	A	O	O	A	O	A	1-2 inches 2-3" sandy soils
7	Foxtail Millet	30 PLS	0.7		O			O			0.5 inches 1-2" sandy soils
8	Pearl Millet	20 PLS	0.5		O			O			0.5 inches 1-2" sandy soils

1. Winter seeding requires 3 tons per acre of straw mulch for proper stabilization.
2. May be planted throughout summer if soil moisture is adequate or seeded area can be irrigated.
3. Applicable on slopes 3:1 or less.
4. Fifty pounds per acre of Annual Lespedeza may be added to 1/2 the seeding rate of any of the above species.
5. Use varieties currently recommended for Delaware. Contact a County Extension Office for information.
6. Warm season grasses such as Millet or Weeping Lovegrass may be used between 5/1 and 9/1 if desired. Seed at 3-5 lbs. per acre. Good on low fertility and acid areas. Seed after frost through summer at a depth of 0.5".

Source:	Symbol:	Detail No.
Delaware ESC Handbook		DE-ESC-3.4.3 Sheet 1 of 4 Date: 12/03

Delaware Erosion & Sediment Control Handbook

Standard Detail & Specifications
Vegetative Stabilization

PERMANENT SEEDING AND SEEDING DATES

Mix No.	Seeding Mixtures	Seeding Rate[1]		Optimum Seeding Dates [2] O = Optimum Planting Period A = Acceptable Planting Period							Remarks
Mix No.	Certified Seed[3]			Coastal Plain			Piedmont			All[4]	
	Well Drained Soils	lb/Ac	lb/1000 sq.ft.	2/1-4/30	5/1-8/14	8/15-10/31	3/1-4/30	5/1-7/31	8/1-10/31	10/31-2/1	
1	Tall Fescue Weeping Lovegrass	140 10	3.2 0.23	A	O	A	A	O	A	Add 100 lbs./ac Winter Rye	Good erosion control mix Tolerant of low fertility soils Lovegrass very difficult to mow; Germinates only in hot weather
2	Deertongue Sheep Fescue Common Lespedeza[5] Inoculated	30 30 15	0.69 0.69 0.35	A	O	A	A	O	A	Add 100 lbs./ac Winter Rye	Good erosion control mix Tolerant of low fertility soils Good wildlife cover and food
3	Tall Fescue (Turf-type) **or** Strong Creeping Red Fescue **or** Perennial Ryegrass **plus** Flatpea[5]	50 50 50 15	1.15 1.15 1.15 0.34	O	A	O	O	A	O	Add 100 lbs./ac. Winter Rye	Good erosion control mix Tall Fescue for droughty conditions. Creeping Red Fescue for heavy shade. Flatpea to suppress woody vegetation.
4	Strong Creeping Red Fescue Kentucky Bluegrass Perennial Ryegrass **or** Redtop **plus** White Clover[5]	100 70 15 5 3	2.3 1.61 0.35 0.11 0.07	O	A	O	O	A	O	Add 100 lbs./ac. Winter Rye	Suitable waterway mix. Canada Bluegrass more drought tolerant. Use Redtop for increased drought tolerance.
5	Switchgrass[6,7] **or** Coastal Panicgrass Big Bluestem Little Bluestem Indian Grass	10 10 5 5 5	0.23 0.23 0.11 0.11 0.1		O			O			Native warm-season mixture. Tolerant of low fertility soils. Drought tolerant. Poor shade tolerance. N fertilizer discouraged - weeds
6	Tall Fescue (turf-type) (Blend of 3 cultivars)	150	3.5	O	A	O	O	A	O		Managed filter strip for nutrient uptake.
7	Tall Fescue Ky. Bluegrass (Blend) Perennial Ryegrass	150 20 20	3.5 0.46 0.46	O	A	O	O	A	O		Three cultivars of Kentucky Bluegrass. Traffic tolerant.
8	Big Bluestem[7] Indian Grass[7] Little Bluestem[7] Creeping Red Fescue **plus one of:** Partridge Pea Bush Clover Wild Indigo Showy Tick-Trefoil	10 10 8 30 5 3 3 2	0.23 0.23 0.18 0.69 0.11 0.07 0.07 0.05	O	A		O	A			All species are native. Indian Grass and Bluestem have fluffy seeds. Plant with a specialized native seed drill. Creeping Red Fescue will provide erosion protection while the warm season grasses get established.

Source:	Symbol:	Detail No.
Delaware ESC Handbook		DE-ESC-3.4.3 Sheet 2 of 4 Date: 12/03

Delaware Erosion & Sediment Control Handbook

Standard Detail & Specifications
Vegetative Stabilization

PERMANENT SEEDING AND SEEDING DATES (cont.)

Mix No.	Seeding Mixtures	Seeding Rate[1]		Optimum Seeding Dates [2] O = Optimum Planting Period A = Acceptable Planting Period							Remarks
Mix No.	Certified Seed[3]			Coastal Plain			Piedmont			All[4]	
	Poorly Drained Soils	lb/Ac	lb/1000 sq.ft.	2/1-4/30	5/1-8/14	8/15-10/31	3/1-4/30	5/1-7/31	8/1-10/31	10/31-2/1	
9	Redtop Creeping Bentgrass Sheep Fescue Rough Bluegrass	75 35 30 45	1.72 0.8 0.69 1	O	A	O	O	A	O	Add 100 lbs./ac. Winter Rye	Quick stabilization of disturbed sites and waterways
10	Reed Canarygrass[6]	10	0.23	A		O	A		O		Good erosion control, wildlife cover and wetland revegetation.
	Residential Lawns										
11	Tall Fescue Perennial Ryegrass Kentucky Bluegrass Blend	100 25 30	2.3 0.57 0.69	O	A	O	O	A	O		High value, high maintenance, light traffic, irrigation necessary. Well drained soils, full sun.
12	Tall Fescue Perennial Ryegrass Sheep Fescue	100 25 25	2.3 0.57 0.57	O	A	O	O	A	O		Moderate value, low maintenance, traffic tolerant
13	Creeping Red Fescue Chewings Fescue Rough Bluegrass Kentucky Bluegrass	50 50 20 20	1.15 1.15 0.4 0.4	O	A	O	O	A	O		Shade tolerant, moderate traffic tolerance, moderate maintenance.
14	Creeping Red Fescue Rough Bluegrass **or** Chewings Fescue	50 90	1.15 2.1	O	A	O	O	A	O		Shade tolerant, moisture tolerant.
15	K-31 Tall Fescue	150	3.5	O	A	O	O	A	O		Monoculture, but performs well alone in lawns. Discouraged.

1. When hydroseeding is the chosen method of application, the total rate of seed should be increased by 25%.
2. Winter seeding requires 3 tons per acre of straw mulch. Planting dates listed above are average for Delaware. These dates may require adjustment to reflect local conditions.
3. All seed shall meet the minimum purity and minimum germination percentages recommended by the Delaware Department of Agriculture. The maximum % of weed seeds shall be in accordance with Section 1, Chapter 24, Title 3 of the Delaware Code.
4. Cool season species may be planted throughout summer if soil moisture is adequate or seeded area can be irrigated.
5. All leguminous seed must be inoculated.
6. Warm season grass mix and Reed Canary Grass cannot be mowed more than 4 times per year.
7. Warm season grasses require a soil temperature of at least 50 degrees in order to germinate, and will remain dormant until then.

Source:	Symbol:	Detail No.
Delaware ESC Handbook		DE-ESC-3.4.3 Sheet 3 of 4 Date: 12/03

Delaware Erosion & Sediment Control Handbook

Standard Detail & Specifications
Vegetative Stabilization

Construction Notes:

1. Site Preparation
   a. Prior to seeding, install needed erosion and sediment control practices such as diversions, grade stabilization structures, berms, dikes, grassed waterways, and sediment basins.
   b. Final grading and shaping is not necessary for temporary seedings.
2. Seedbed Preparation

   It is important to prepare a good seedbed to insure the success of establishing vegetation. The seedbed should be well prepared, loose, uniform, and free of large clods, rocks, and other objectionable material. The soil surface should not be compacted or crusted.
3. Soil Amendments
   a. Lime - Apply liming materials based on the recommendations of a **soil test** in accordance with the approved nutrient management plan. If a nutrient management plan is not required, apply dolomitic limestone at the rate of 1 to 2 tons per acre. Apply limestone uniformly and incorporate into the top 4 to 6 inches of soil.
   b. Fertilizer - Apply fertilizer based on the recommendations of a **soil test** in accordance with the approved nutrient management plan. If a nutrient management plan is not required, apply a formulation of 10-10-10 at the rate of 600 pounds per acre. Apply fertilizer uniformly and incorporate into the top 4 to 6 inches of soils.
4. Seeding
   a. For **temporary stabilization**, select a mixture from **Sheet 1**. For a **permanent stabilization**, select a mixture from **Sheet 2** or **Sheet 3** depending on the conditions.
   b. Apply seed uniformly with a broadcast seeder, drill, cultipacker seeder or hydroseeder. All seed will be applied at the recommended rate and planting depth.
   c. Seed that has been broadcast should be covered by raking or dragging and then lightly tamped into place using a roller or cultipacker. If hydroseeding is used and the seed and fertilizer is mixed, they will be mixed on site and the seeding shall be done immediately and without interruption.
5. Mulching

   All mulching shall be done in accordance with detail **DE-ESC-3.4.5**.

Source:	Symbol:	Detail No.
Delaware ESC Handbook		DE-ESC-3.4.3 Sheet 4 of 4 Date: 12/03

DATE:	DESCRIPTION:	BY:

SWINGING BRIDGE MAINTENANCE REPAIRS
BRIDGE NORTH APPROACH
EROSION AND SEDIMENT CONTROL PLAN

DELAWARE DEPARTMENT OF NATURAL RESOURCES AND ENVIRONMENTAL CONTROL

Century Engineering, Inc.

DESIGNED BY:	W.J.H.
DRAWN BY:	M.T.R.
BUILDING NO.:	- - - -
DATE:	FEBRUARY 2014
SCALE:	AS NOTED
SHEET NO.:	C3.1
PARKS PROJECT #:	WB-10
CONTRACT #:	2014-WB-100

G:\PROJECTS\125002.OE (DNREC Civil Engineering Services - 2012)\125002.01_(N. DE Greenway_Swinging Bridge)\CADD FILES\BRIDGE PLANS\C3.1 E AND S Plan.dwg, 2/28/2014 8:50:27 AM

DE MUTCD Page 6H-29

Figure 6H-6. Shoulder Work with Minor Encroachment on a Two-Lane, Low-Speed Road (≤ 40 MPH) (TA-6)

(Delaware Revision)

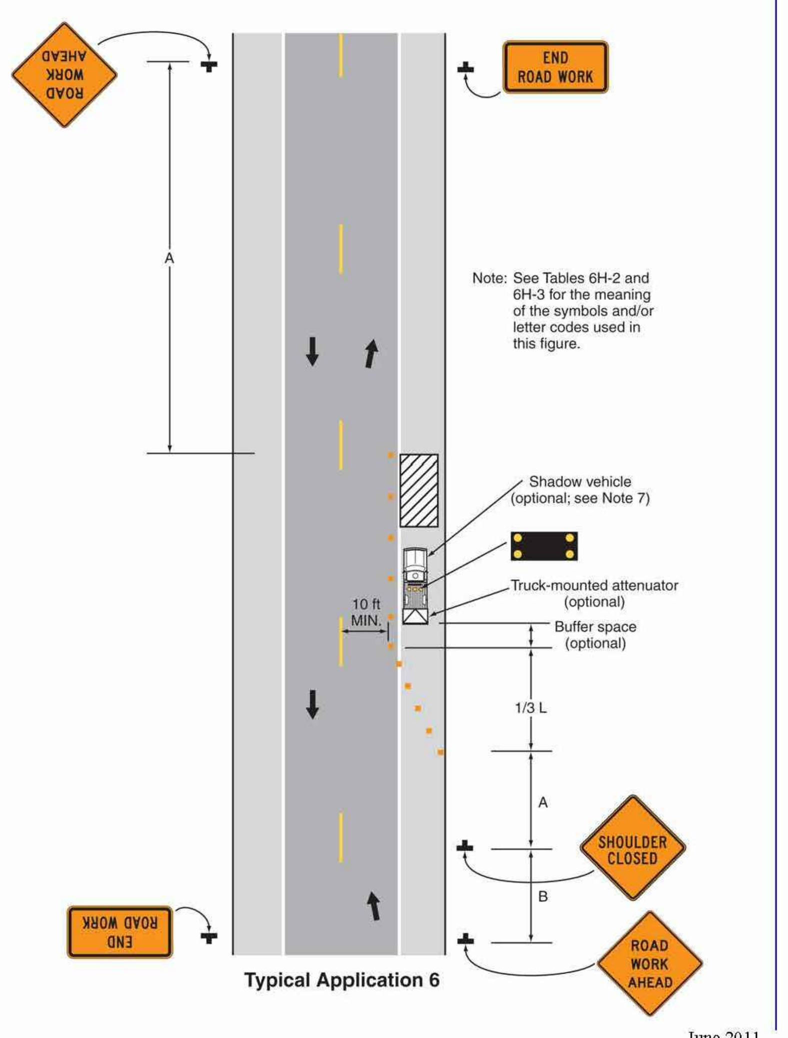

Typical Application 6

June 2011

Page 6H-28 DE MUTCD

Notes for Figure 6H-6—Typical Application 6

Shoulder Work with Minor Encroachment on a Two-Lane, Low-Speed Road (≤ 40 MPH)

(Delaware Revision)

Standard:

1. This TTC zone application shall be limited to minor roads with a posted speed limit or 85th-percentile speed less than or equal to 40 mph. For higher-speed traffic conditions, a lane closure shall be used (see Figure 6H-10).

Guidance:

2. All lanes should be a minimum of 10 feet in width as measured to the near face of the channelizing devices. Except as provided in Note 3, a lane closure (see Figure 6H-10) should be used when the operations cannot accommodate the minimum 10-foot travel lane.

Option:

3. For short-term use on low-volume, low-speed roadways with vehicular traffic that does not include longer and wider heavy commercial vehicles, a minimum lane width of 9 feet may be used.

4. Where the opposite shoulder is suitable for carrying vehicular traffic and of adequate width, lanes may be shifted by use of closely-spaced channelizing devices, provided that the minimum lane width of 10 feet is maintained (see Figure 6H-11B).

5. Additional advance warning may be appropriate, such as a ROAD NARROWS sign.

6. Temporary traffic barriers may be used along the work space.

7. The shadow vehicle may be omitted if a taper and channelizing devices are used.

8. Truck-mounted attenuators may be used for all operations along roadways with a posted speed limit or 85th-percentile speed less than or equal to 40 mph.

Standard:

9. Vehicle-mounted signs shall be mounted in a manner such that they are not obscured by equipment or supplies. Sign legends on vehicle-mounted signs shall be covered or turned from view when work is not in progress.

Guidance:

10. Where drivers emerging from an intersecting roadway will not encounter an advance warning sign prior to the work zone, additional signs should be placed on the intersecting road.

TRAFFIC CONTROL NOTES:

1. MAINTENANCE OF TRAFFIC DURING LANE CLOSURES AND LANE SHIFTS SHALL CONFORM TO TYPICAL APPLICATION 6 OF THE DELAWARE MUTCD.
2. WORK SHALL BE PERFORMED IN A MANNER THAT WILL REASONABLY PROVIDE THE LEAST PRACTICABLE OBSTRUCTION TO TRAFFIC, CONSISTENT WITH SAFETY STANDARDS AND SHALL COMPLY WITH THE LATEST EDITION OF THE MANUAL TITLED "DELAWARE DEPARTMENT OF TRANSPORTATION MANUAL ON UNIFORM TRAFFIC CONTROL DEVICES (MUTCD) FOR STREETS AND HIGHWAYS" HERE AFTER REFERRED TO AS THE TRAFFIC CONTROL MANUAL.
3. ALL TEMPORARY (5 FEET) OR PERMANENT (7 FEET) WARNING SIGNS SHALL BE COVERED WITH RETROREFLECTIVE FLORESCENT SHEETING ON ALUMINUM PANELS, ELIMINATING THE NEED FOR TYPE "B" WARNING LIGHTS ON THESE SIGNS. ALL SIGNS SHALL BE MOUNTED ON BREAKAWAY POSTS SUCH THAT THE BOTTOM OF THE SIGN MEETS THE REQUIRED HEIGHT, AS NOTED ABOVE, ABOVE THE GROUND UNLESS OTHERWISE AUTHORIZED BY THE ENGINEER.
4. TRAFFIC PROTECTION DEVICES SHALL BE SUITABLY MAINTAINED AT ALL TIMES. SUCH MAINTENANCE SHALL INCLUDE WASHING SIGN FACES, ALIGNING PROPERLY, REPLACING REFLECTIVE MATERIALS, RELOCATING BARRIERS, AND ANY OTHER MAINTENANCE OF TRAFFIC PROTECTION DEVICES DEEMED NECESSARY BY THE OWNER TO MAINTAIN TRAFFIC IN A SAFE AND EFFECTIVE MANNER.
5. AS REQUIRED, AT THE END OF EACH DAY'S OPERATIONS AND BEFORE TRAFFIC IS RETURNED TO UNRESTRICTED ROADWAY USE, CONTRACTOR SHALL APPLY TEMPORARY MARKINGS TO MEET THE REQUIREMENTS OF SECTION 748 OF THE DELAWARE STANDARD SPECIFICATIONS AND THE DELAWARE TRAFFIC CONTROL MANUAL.
6. THE CONTRACTOR IS RESPONSIBLE FOR THE MAINTENANCE OF EXISTING PAVEMENT WITHIN THE PROJECT LIMITS FOR THE DURATION OF THE CONTRACT OR AS DIRECTED BY THE OWNER.
7. THE CONTRACTOR SHALL BE RESPONSIBLE FOR NOTIFYING THE LOCAL 911 CENTER, LOCAL SCHOOLS, AND THE CITY OF WILMINGTON AND THE TRAFFIC MANAGEMENT CENTER OF ALL LANES TO BE CLOSED AT A MINIMUM OF SEVEN (7) CALENDAR DAYS BEFORE THE CLOSURE. IF TEMPORARILY BLOCKING ACCESS TO A FIRE HYDRANT IS REQUIRED, NOTIFICATION MUST BE GIVEN TO THE CITY OF WILMINGTON, THE LOCAL FIRE FIGHTING AUTHORITIES, AND THE 911 CENTER.
8. THE CONTRACTOR SHALL BE RESPONSIBLE FOR COORDINATING WORK WITH OTHER CONTRACTORS IN THE AREA.

RESTRICTIONS:

----DURING WORK HOURS----

THROUGH AND LOCAL MOVEMENTS MUST BE MAINTAINED AT ALL TIMES UNDER APPROPRIATE TRAFFIC CONTROL. A MINIMUM OF ONE LANE MUST BE MAINTAINED AT ALL TIMES UNLESS OTHERWISE APPROVED BY DNREC.

----DURING NON-WORK HOURS (E.G., NIGHTS AND WEEKENDS)----

UNRESTRICTED TRAFFIC FLOW MUST BE MAINTAINED AT ALL TIMES. EXCAVATION, TRM WEDGING, BACKFILL, PLATE COVERAGE, OR OTHER APPROVED HAZARD IDENTIFICATION OR PROTECTION AS PER THE SPECIAL PROVISIONS WILL BE DONE AT THE CONTRACTOR'S EXPENSE.

----CONSTRUCTION HOURS----

WORK THAT WOULD RESTRICT TRAFFIC ON NORTH PARK DRIVE SHALL BE RESTRICTED TO BETWEEN THE HOURS OF 8:00 A.M. TO 5:00 P.M., MONDAY THROUGH FRIDAY, UNLESS OTHERWISE APPROVED BY DNREC.

LEGEND

END WORK ZONE	ROAD WORK AHEAD
G20–2A 48" x 24"	W20–1 48" x 48"

PEDESTRIAN CONTROL NOTES:

1. MAINTENANCE OF PEDESTRIAN TRAFFIC SHALL CONSIST OF ADVANCED WARNING SIGNS LOCATED AS SHOWN ON THIS SHEET, OR AS DIRECTED/APPROVED BY DNREC.
2. WORK SHALL BE PERFORMED IN A MANNER THAT WILL REASONABLY PROVIDE THE LEAST PRACTICABLE OBSTRUCTION TO TRAFFIC, CONSISTENT WITH SAFETY STANDARDS AND SHALL COMPLY WITH THE LATEST EDITION OF THE MANUAL TITLED "DELAWARE DEPARTMENT OF TRANSPORTATION MANUAL ON UNIFORM TRAFFIC CONTROL DEVICES (MUTCD) FOR STREETS AND HIGHWAYS" HERE AFTER REFERRED TO AS THE TRAFFIC CONTROL MANUAL.
3. ALL TEMPORARY PEDESTRIAN ADVANCED WARNING SIGNS SHALL BE MOUNTED ON TIMBER SKID TYPE BARRICADES SUFFICIENTLY WEIGHTED WITH SAND BAGS TO THE SATISFACTION OF DNREC. THE CONTRACTOR SHALL SUBMIT DETAILED DRAWINGS SHOWING THE CONSTRUCTION FO THE BARRICADES.
4. PEDESTRIAN PROTECTION DEVICES, INCLUDING SIGNS, SHALL BE SUITABLY MAINTAINED AT ALL TIMES. SUCH MAINTENANCE SHALL INCLUDE WASHING SIGN FACES, ALIGNING PROPERLY, RELOCATING BARRIERS, AND ANY OTHER MAINTENANCE OF PEDESTRIAN PROTECTION DEVICES DEEMED NECESSARY BY DNREC TO MAINTAIN TRAFFIC IN A SAFE AND EFFECTIVE MANNER.

LEGEND

PEDESTRIAN BRIDGE CLOSED AHEAD	PEDESTRIAN BRIDGE CLOSED FOR MAINTENANCE REPAIRS DATE TO DATE
"SP–1" 48" x 18" ORANGE W/ 4" BLACK LEGEND	"SP–2" 24" x 15" WHITE W/ 2" BLACK LEGEND

NOTES:
1. SP–1 AND SP–2 SIGNS TO BE LOCATED ON PARKS OWNED SIDEWALKS AT DIRECTION OF OWNER.
2. SP–2 SIGN SHALL BE PLACED AT BRIDGE ENTRANCES 2 WEEKS IN ADVANCE OF BRIDGE CLOSURE AND REMAIN IN PLACE FOR DURATION OF CONSTRUCTION. AT START OF WORK, CONTRACTOR SHALL RELOCATE SIGNS TO BARRICADE/SAFETY FENCE BLOCKING SIDEWALK AT NO ADDITIONAL COST TO THE OWNER. COORDINATE ACTUAL LOCATION(S) WITH OWNER.

DE MUTCD Page 6H-35

Figure 6H-10. Lane Closure on a Two-Lane Road Using Flaggers (TA-10)

(Delaware Revision)

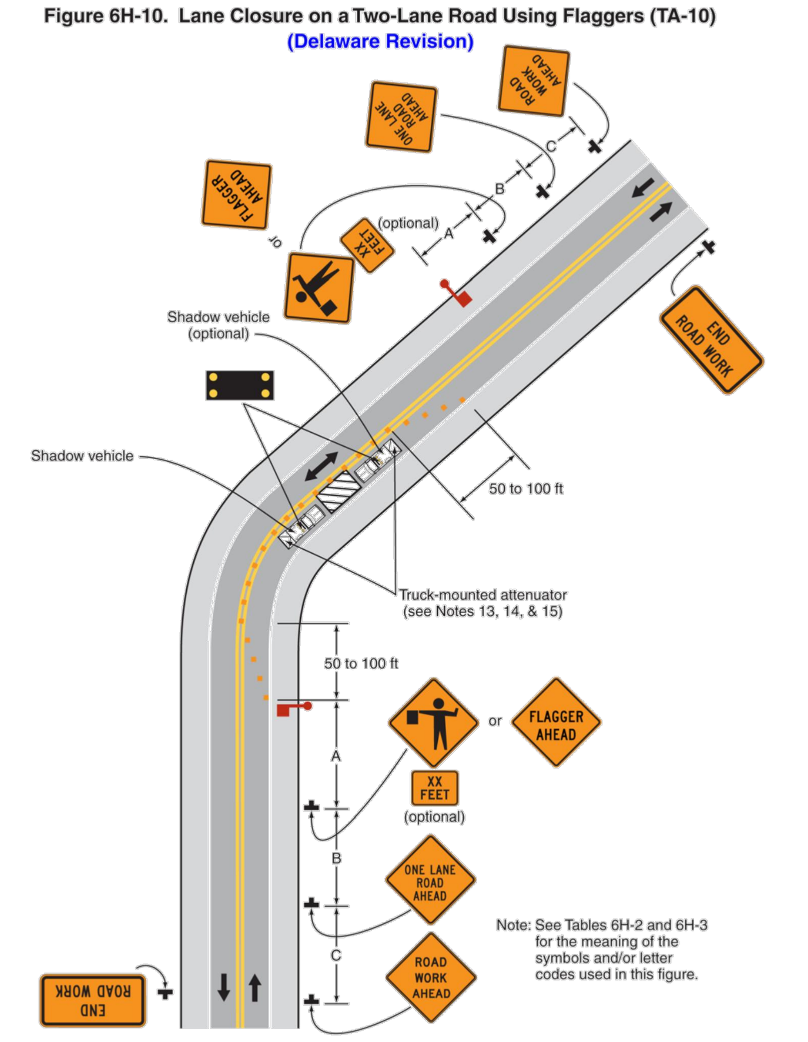

Typical Application 10

Page 6H-34 DE MUTCD

Notes for Figure 6H-10—Typical Application 10

Lane Closure on a Two-Lane Road Using Flaggers

(Delaware Revision)

Option:

1. For low-volume situations with short work zones on straight roadways where the flagger is visible to road users approaching from both directions, a single flagger, positioned to be visible to road users approaching from both directions, may be used (see Chapter 6E).

2. The ROAD WORK AHEAD and the END ROAD WORK signs may be omitted for short-duration operations.

3. A BE PREPARED TO STOP sign may be added to the sign series.

Guidance:

4. The buffer space should be extended so that the two-way traffic taper is placed before a horizontal (or crest vertical) curve to provide adequate sight distance for the flagger and a queue of stopped vehicles.

Standard:

5. At night, flagger stations shall be illuminated, except in emergencies.

Guidance:

6. When used, the BE PREPARED TO STOP sign should be located between the Flagger symbol (or FLAGGER AHEAD) sign and the ONE LANE ROAD sign.

7. Where drivers emerging from an intersecting roadway will not encounter an advance warning sign prior to the work zone, additional signs should be placed on the intersecting road.

8. When a grade crossing exists within or upstream of the transition area and it is anticipated that queues resulting from the lane closure might extend through the grade crossing, the TTC zone should be extended so that the transition area precedes the grade crossing (see Figure 6H-46).

9. When a grade crossing equipped with active warning devices exists within the activity area, provisions should be made for keeping flaggers informed as to the activation status of these warning devices (see Figure 6H-46).

10. When a grade crossing exists within the activity area, drivers operating on the left-hand side of the normal center line should be provided with comparable warning devices as for drivers operating on the right-hand side of the normal center line (see Figure 6H-46).

11. Early coordination with the railroad company or light rail transit agency should occur before work starts (see Figure 6H-46).

Option:

12. A flagger or a uniformed law enforcement officer may be used at the upstream side of the grade crossing to minimize the probability that vehicles are stopped within 50 feet of the grade crossing, measured from both sides of the outside rails (see Figure 6H-46).

Standard:

13. For long-term, intermediate-term, and short-term operations, a truck-mounted attenuator shall be used on roadways with a posted speed limit or 85th-percentile speed greater than 40 mph.

Option:

14. For short duration operations of 15 minutes or less along roadways with a posted speed limit or 85th-percentile speed greater than 40 mph, a truck-mounted attenuator may be omitted if a vehicle with activated high-intensity rotating, flashing, oscillating, or strobe lights is used.

15. Truck-mounted attenuators may be used for all operations along roadways with a posted speed limit or 85th-percentile speed less than or equal to 40 mph.

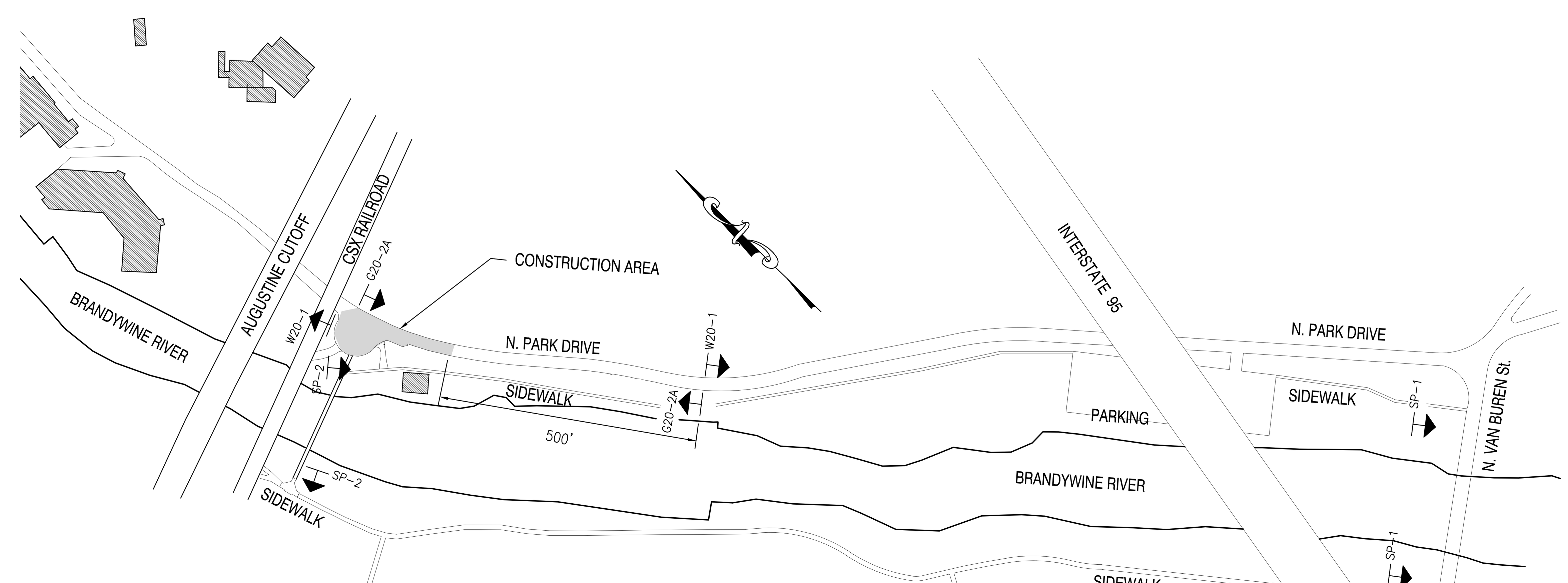

PERMANENT WARNING SIGNS

SCALE: 1" = 200'

0' 200' 400' 800'

SCALE: 1" = 200'

Century Engineering, Inc.

DATE:	DESCRIPTION:	BY:

SWINGING BRIDGE MAINTENANCE REPAIRS

MAINTENANCE OF TRAFFIC PLAN

DELAWARE DEPARTMENT OF NATURAL RESOURCES AND ENVIRONMENTAL CONTROL

DESIGNED BY: W.J.H.

DRAWN BY: M.T.R.

BUILDING NO.: - - - -

DATE: FEBRUARY 2014

SCALE: AS NOTED

SHEET NO.: C4.1

PARKS PROJECT #: WB-10

CONTRACT #: 2014-WB-100

G:\PROJECTS\125002.OE (DNREC Civil Engineering Services - 2012)\125002.01_(N. DE Greenway_Swinging Bridge)\CADD FILES\BRIDGE PLANS\C4.1 MOT Plan.dwg, 2/28/2014 8:54:39 AM